19930093347

RB Jan. 1943

NATIONAL ADVISORY COMMITTEE FOR AERONAUTICS

WARTIME REPORT

ORIGINALLY ISSUED
January 1943 as
[redacted] Bulletin

EFFECT OF NORMAL PRESSURE ON THE CRITICAL SHEAR STRESS OF CURVED SHEET

By Norman Rafel

Langley Memorial Aeronautical Laboratory
Langley Field, Va.

WASHINGTON

NACA WARTIME REPORTS are reprints of papers originally issued to provide rapid distribution of advance research results to an authorized group requiring them for the war effort. They were previously held under a security status but are now unclassified. Some of these reports were not technically edited, All have been reproduced without change in order to expedite general distribution.

NATIONAL ADVISORY COMMITTEE FOR AERONAUTICS

[redacted] BULLETIN

EFFECT OF NORMAL PRESSURE ON THE CRITICAL SHEAR STRESS OF CURVED SHEET

By Norman Rafel

On an airplane in level flight, the upper surface of the wing is subjected to an outward-acting pressure due to the difference in internal and external pressures. In order to determine the effect of this pressure on the critical stresses, an experimental study has been undertaken. Reference 1 presented the results of compression tests on unstiffened curved sheet subjected to an outward-acting normal pressure. The present reoort gives the results of torsion tests on two curved-sheet specimens subjected to an outward-acting normal pressure.

The two specimens, shown in figures 1 and 2, are designated by their respective rib spacings of 10 inches and 30 inches. The specimens were mounted on a rigid vertical abutmant in the NACA structures research laboratory as shown in figure 3. Two 100,000-pound-capacity hydraulic Jacks mere used to apply torque to the specimens, one in conjunction with a lever to give downward load. Dial-gage readings were taken at the onter edge of each rib station.

Normal pressure was applied by admitting compressed air through a regulating valve into the specimen. A mercury manometer calibrated in pounds per square inch was used to measure the pressure inside the specimen.

The specimen with 30-inch rib spacing originallg had three bays of equal length, After several runs at different pressures, however, the buckling in the tip bay had become severe enough to cause yielding of the flange on the end rib, leaving a permanent buckle in the sheet and resulting in lower buckling loads for the specimen. The specimen was then repaired by reducing the length of the end bays to 21½ inches and making new end ribs of heavier-gage steel. (See fig. 2.) The critical buckling load was thereafter taken as the load at which buckling occurred in the bay 30 inches long.

The altered specimen was tested with normal pressures up to 7 pounds per square inch. At the buckling load for that pressure, however, very deep buckles and large rotational deflection occurred. After the load was released, small permanent buckles remained in the sheet. Some additional tests were made on the specimen in this damaged state, in order to determine the effect of initial yielding on the buckling load.

In the plotting of test results, tbe shear stress in the skin at any torque was assumed to be given by the formula

$$\tau = \frac{T}{24.1;}$$

where

τ shear stress

T applied torque

A area enclosed by median line of skin

t thickness of skin

The results of the tests are presented in figures 4 to 9, from which the following conclusions are drawn:

1. Loading of tbe specimen until buckling occurred at normal pressures as high as 6 pounds per square inch did not appreciably injure the specimen for additional tests at different pressures, as evidenced by the experimental points in figure 4, where the numbers 1, 2, 3, and so forth indicate the order in which the tests were made. The presence of permarent buckles, however, did lower the critical shear stress for the specimen, as shown by the two curves for the specimen with SO-inch rib spacing. (See fig. 4.)

2. An outward-acting normal pressure appreciably raises the critical shear stress for unstiffened curved sheet. (See fig. 4.)

3. The absolute increase in critical shear stress caused by normal pressure is slightly greater for the 30-inch rib spacing than for the 10-inch rib spacing. (See fig. 5.) On a percentage basis, however, the increase in critical shear stress caused by normal pressure is considerably greater for the 30-inch rib spacing than for the 10-inch rib spacing. (See fig. 6.)

4. The curve of shear stress agaiast normal pressure at which buckles disappeared was always below the curve of shear stress against normal pressure at which the buckles appeared. (See fig. 7.)

5. The relationship between shear stress and normal pressure at which buckles disappeared is independent of whether the buckles were made to disappear by increase of normal pressure or by decrease of shear stress, (See fig. 7.)

6. The torsional stiffness of the specimens before buckling was not affected significantly by an outward-acting normal pressure. (See figs. 8 and 9.) The low torsional stiffness indicated in figure 8 for normal pressures of 0 and 1 pound per square inch at a shear stress of 7098 pounds per square inch is explained by the fact that in these two cases the buckling stress had been exceeded.

Langley Memorial Aeronautical Laboratory,
National Advisory Committee for Aeronautics,
Langley Bield, Va.

REFERENCE

1. Rafel, Norman: Effect of Normal Pressure on the Critical Compressive Stress of Curved Sheet. NACA Rb, Jan. 1943.

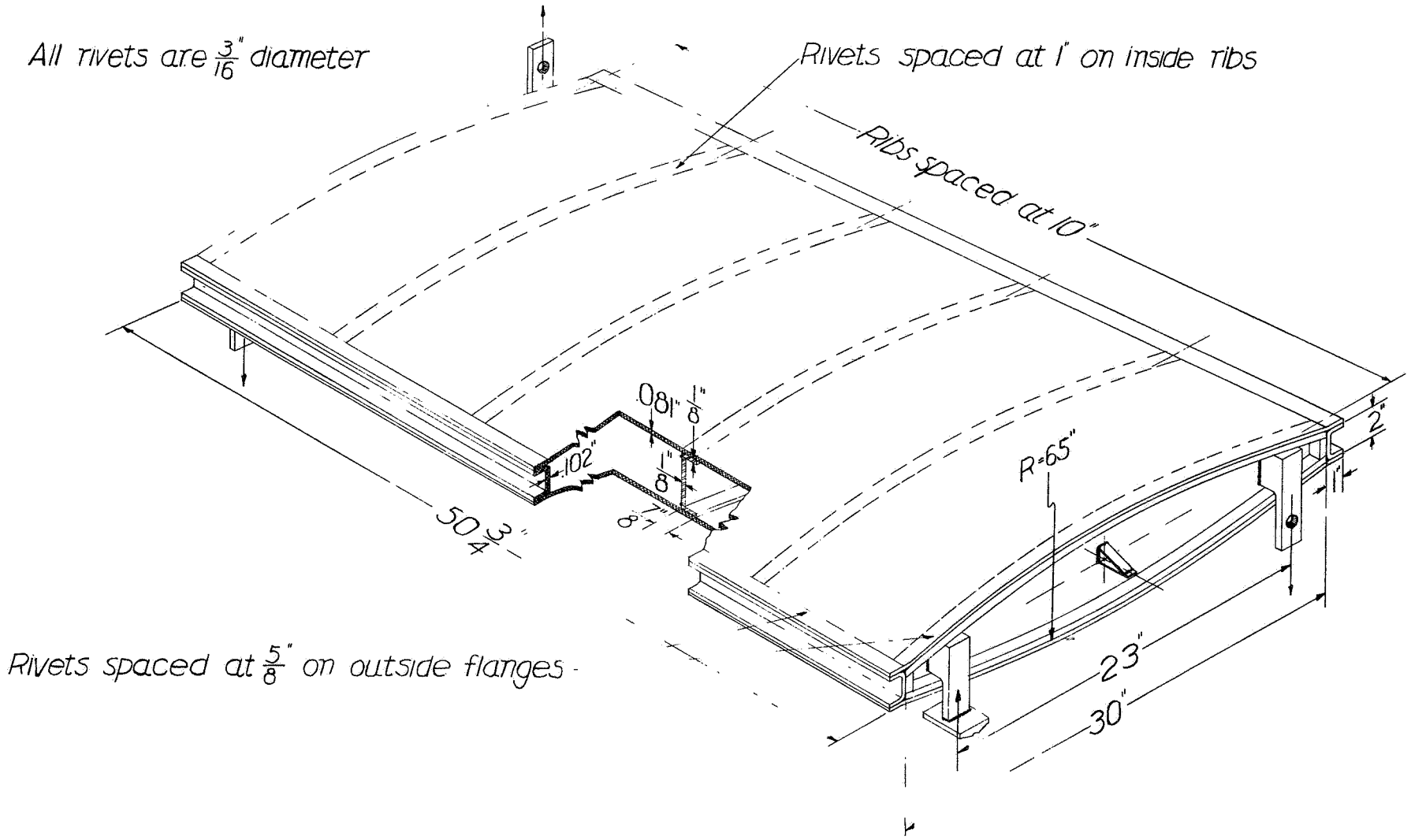

Figure 1.- Specimen with 10-inch rib spacing.

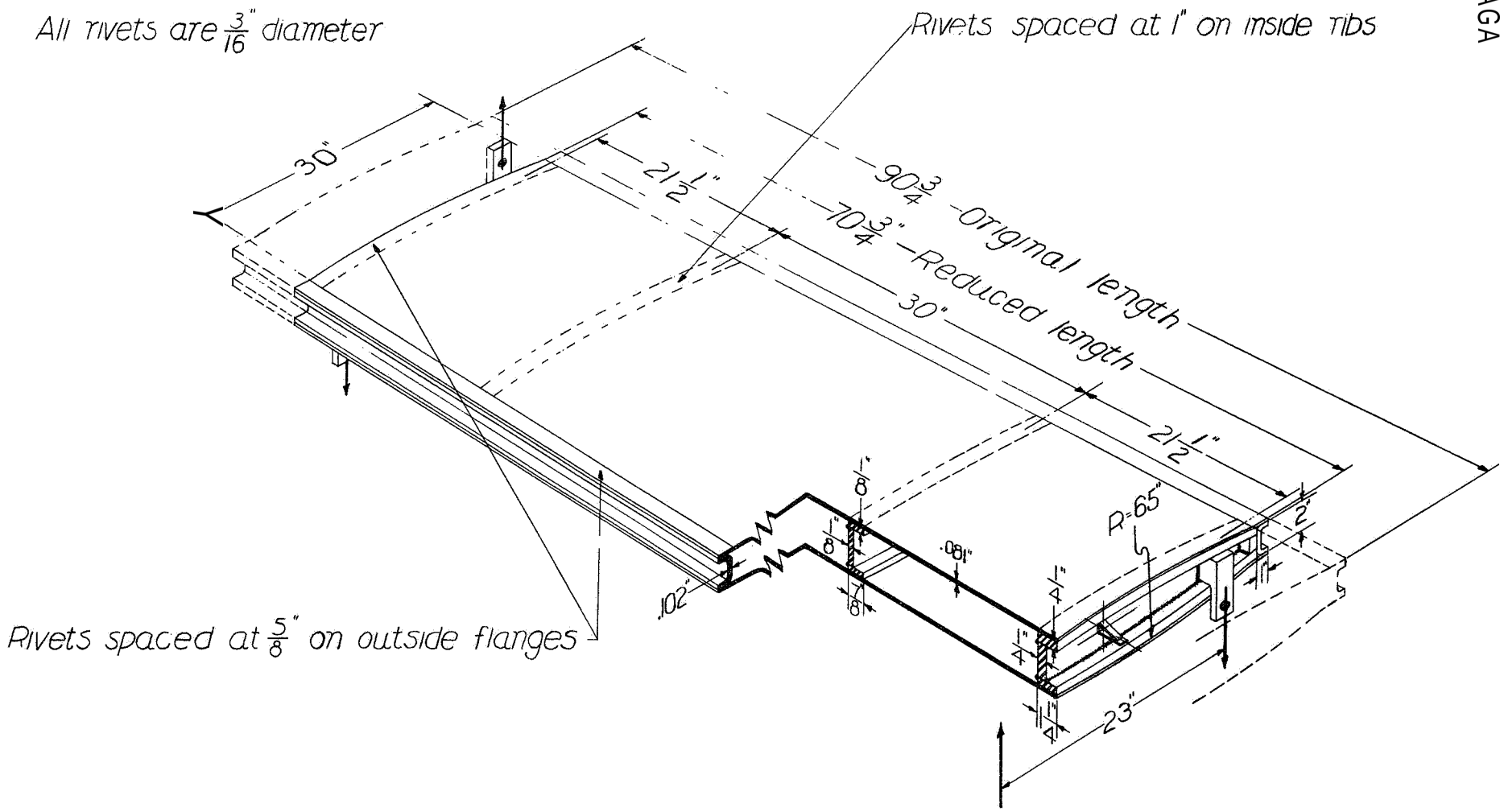

Figure 2 - Specimen with 30-inch rib spacing.

L-416

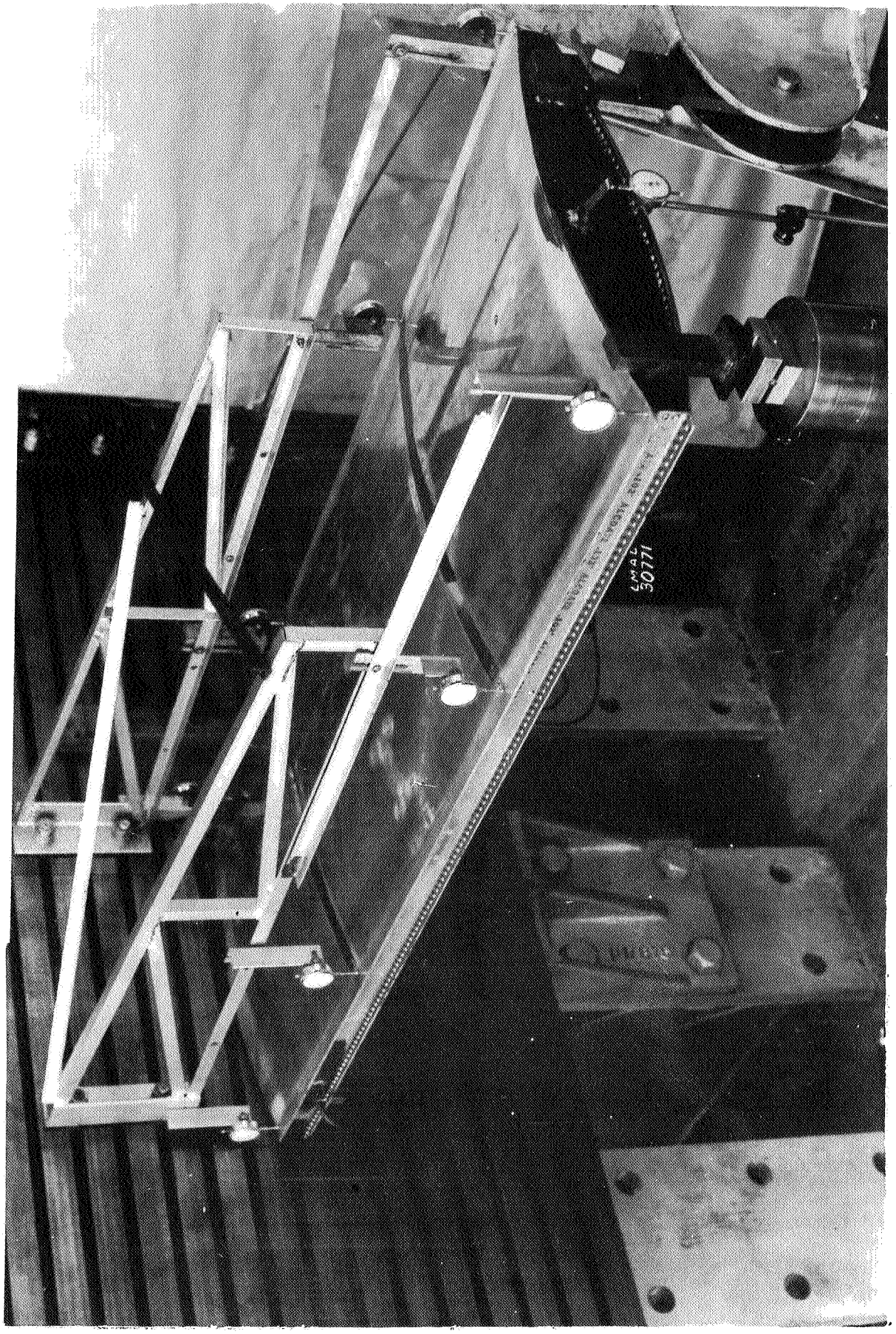

Figure 3 - Torsion test of curved-sheet panel with outward-acting normal pressure

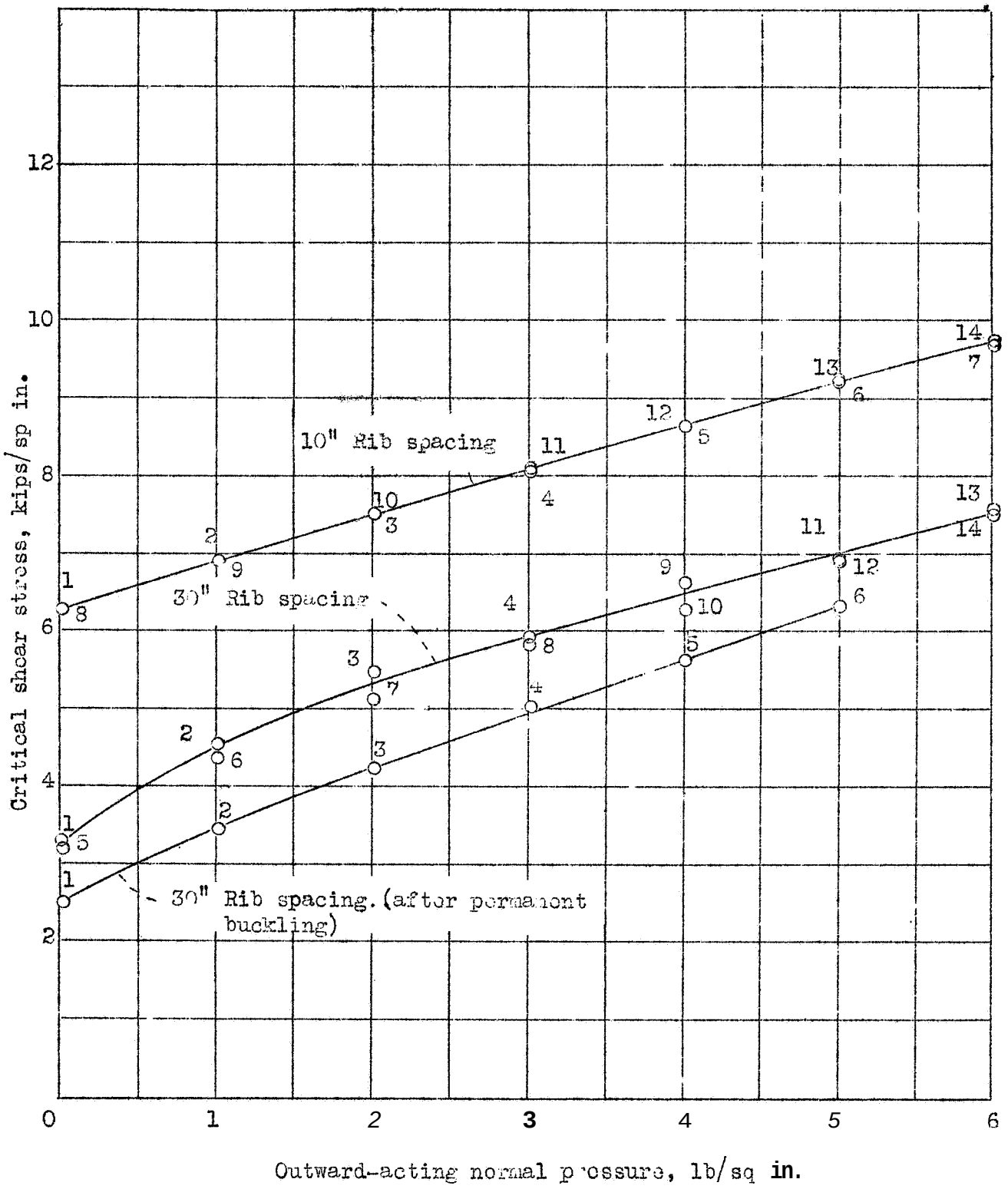

Figure 4.- Effect of normal pressure on critical shear stress.

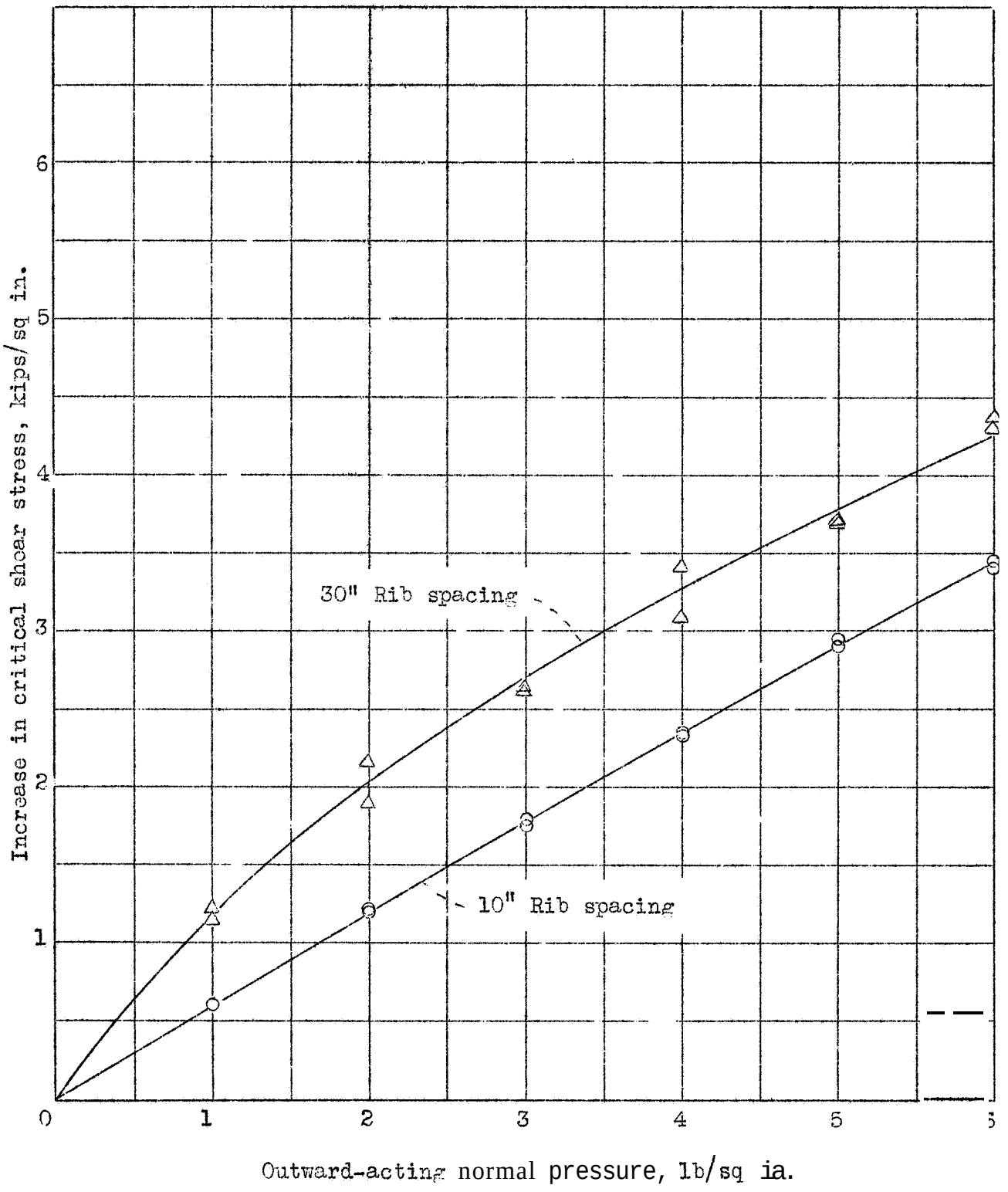

Figure 5.- Increase in critical shear stress caused by normal pressure.

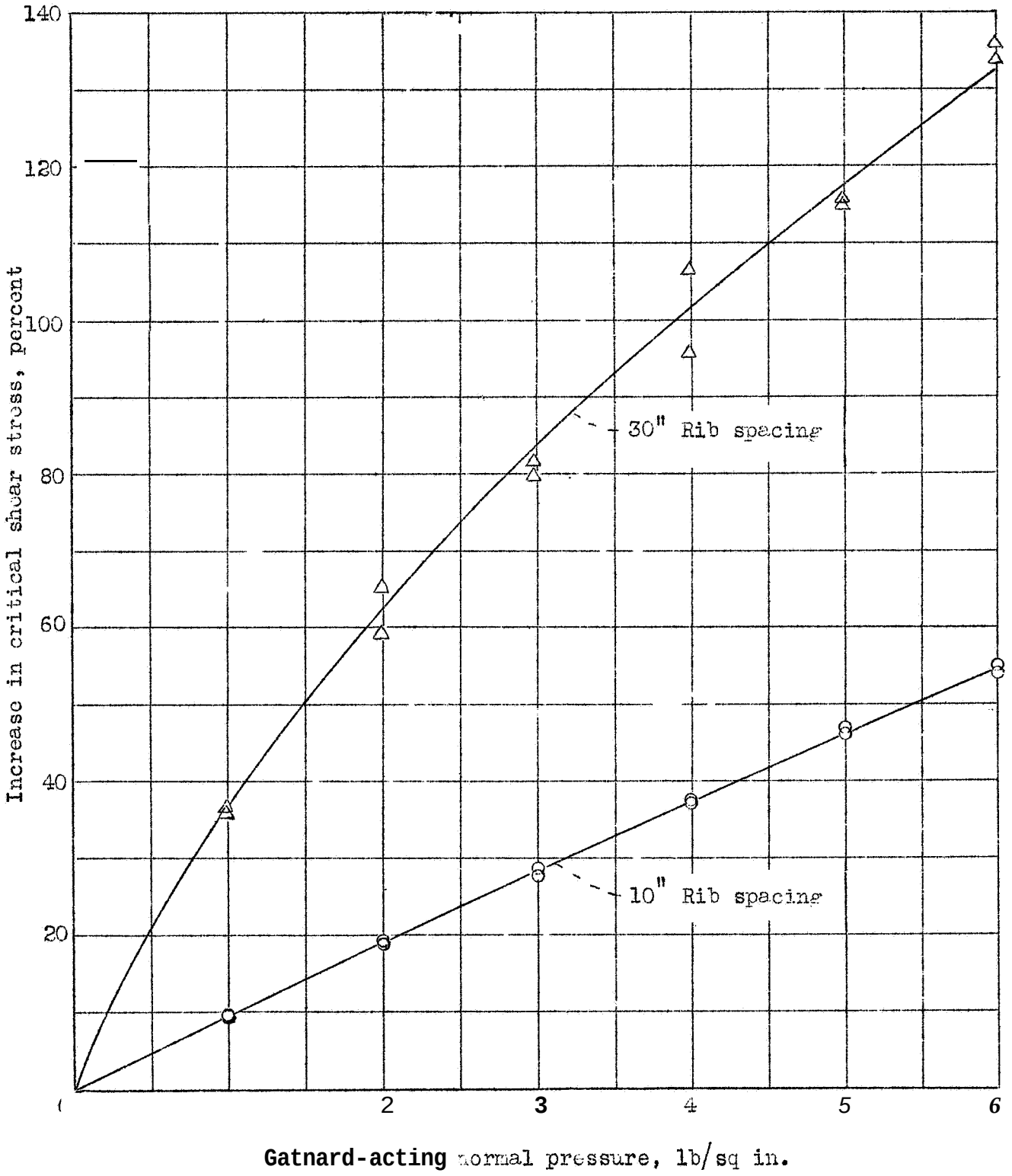

Figure 6.- Percentage increase in critical shear stress caused by normal pressure.

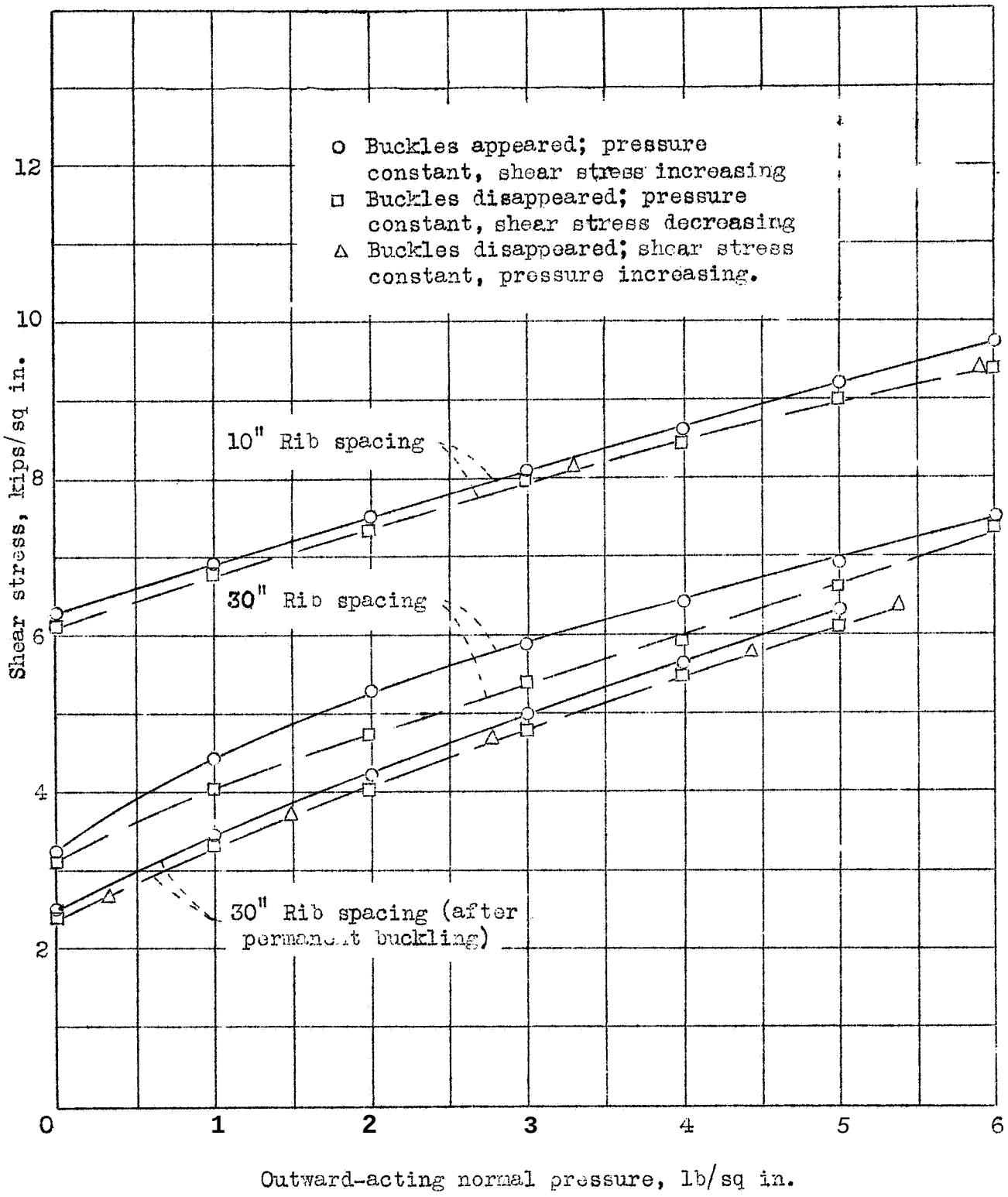

Figure 7.- Comparison of shear stress at which buckles appeared and disappeared.

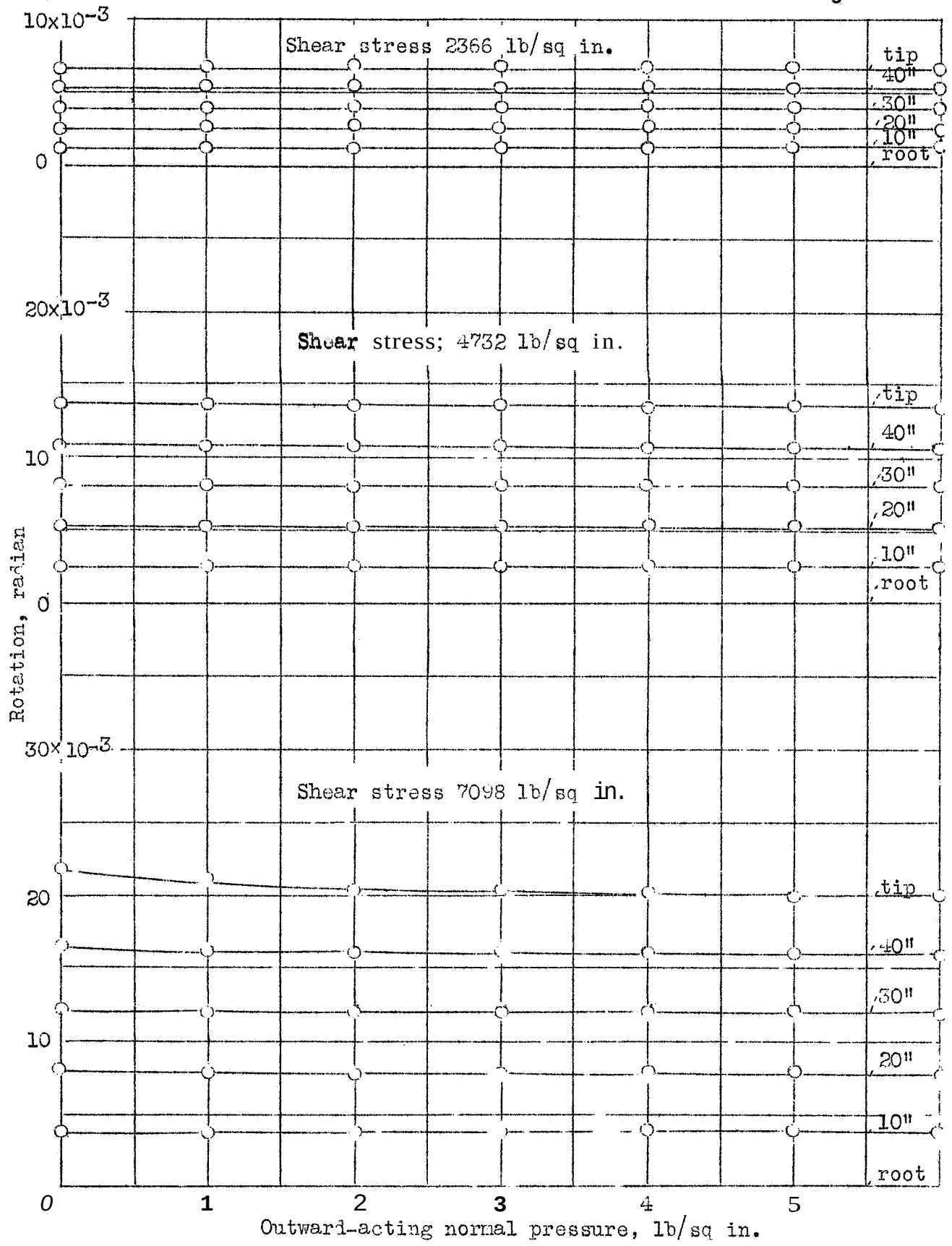

Figure 8.- Effect of normal pressure on rotation of specimen with 10-inch rib spacing.

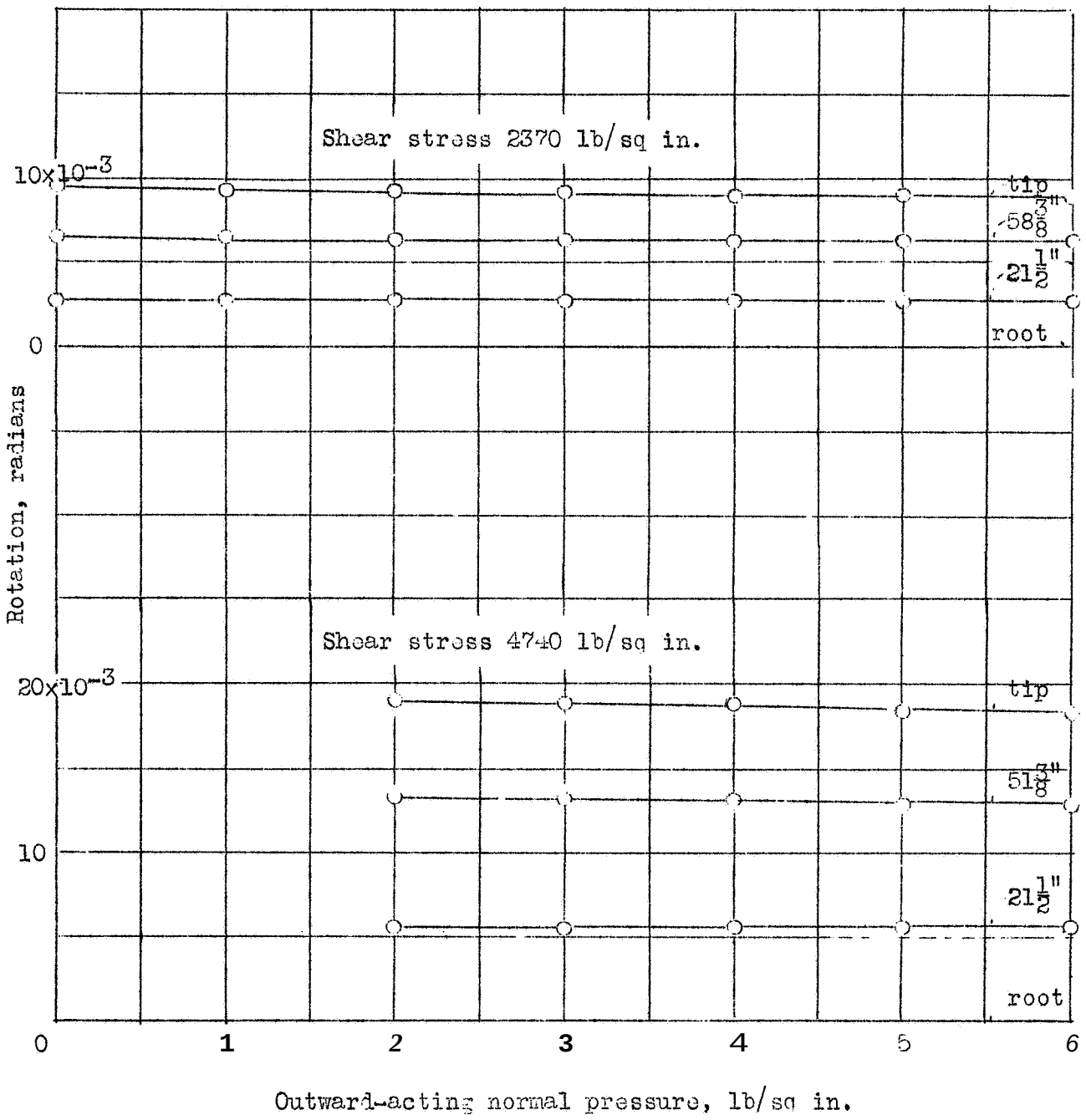

Figure 9.- Effect of normal pressure on rotation of specimen with 30-inch rib spacing.

TSDIN FORM 69 A (13 MAR 47)

RESTRICTED

P-7-2-25

ATI- 16203

ORIG. AGENCY NUMBER

REVISION

Rafal, Norman

AUTHOR(S)

DIVISION: Stress Analysis and Structures (7)
SECTION: Structural Theory and Analysis (2)
CROSS REFERENCES: Sheets Curved (85786)

U

AMER. TITLE: Effect of normal pressure on the critical shear stress of curved sheet

FORG'N. TITLE:

ORIGINATING AGENCY: National Advisory Committee for Aeronautics, Washington, D. C.

TRANSLATION:

COUNTRY	LANGUAGE	FORG'N.CLASS	U. S.CLASS.	DATE	PAGES	ILLUS.	FEATURES
U.S.	Eng.		Restr.	Jan'43	12	9	photo,graphs,drwgs

ABSTRACT

In order to determine the critical stresses caused by an outward acting pressure on the upper surface of a wing due to the difference in internal and external pressures, torsional tests were made on two curved-sheet specimens subjected to an outward acting normal pressure. Results show that an outward acting normal pressure appreciably raises the critical shear stress for an unstiffened curved sheet; the absolute increase in critical shear stress is slightly greater for a 30 in. rib spacing than for a 10 in. rib spacing.

NOTE: Requests for copies of this report must be addressed to: N.A.C.A., Washington

U EO 10501 dd 5 NOV 1953

TSDIN FORM 60 A (19 MAR 47)

RESTRICTED

19-7-2-25

ATI- 16203

ORIG. AGENCY NUMBER

REVISION

Rafal, Norman

AUTHOR(S)

DIVISION: Stresse Analysis and Structures (7)
SECTION: Structural Theory and Analysis (2)
CROSS REFERENCES: Sheets Curved (85786)

AMER. TITLE: Effect of normal pressure on the critical shear stress of curved sheet

FORG'N. TITLE:

ORIGINATING AGENCY: National Advisory Committee for Aeronautics, Washington, D. C.

TRANSLATION:

COUNTRY	LANGUAGE	FORG'N.CLASS	U. S.CLASS.	DATE	PAGES	ILLUS.	FEATURES
U.S.	Eng.		Restr.	Jan'43	12	9	photo,graphs,drwgs

ABSTRACT

In order to determine the critical stresses caused by an outward acting pressure on the upper surface of a wing due to the difference in internal and external pressures, torsional tests were made on two curved-sheet specimens subjected to an outward acting normal pressure. Results show that an outward acting normal pressure appreciably raises the critical shear stress for an unstiffened curved sheet; the absolute increase in critical shear stress is slightly greater for a 30 in. rib spacing than for a 10 in. rib spacing.

NOTE: Requests for copies of this report must be addressed to: N.A.C.A., Washington

T-2, HQ., AIR MATERIEL COMMAND — AIR TECHNICAL INDEX — WRIGHT FIELD, OHIO, USAAF

RESTRICTED

WF-O-21 MAR 47 22,500

TSDIS FORM 60 (13 Oct 47)

Rafel, Norman

AUTHOR(S)

DIVISION: Aerodynamics (2)
SECTION: Wings and Airfoils (6)
CROSS REFERENCES: Wings - Stresses (99180)

R-2-6-73

ATI- 7642

ORIG. AGENCY NUMBER
KS-L-416

REVISION

AMER. TITLE: Effect of normal pressure on the critical shear stress of curved sheet

FORG'N. TITLE:

OVER

ORIGINATING AGENCY: National Advisory Committee for Aeronautics, Washington, D. C.

TRANSLATION:

COUNTRY	LANGUAGE	FORG'N.CLASS	U. S.CLASS.	DATE	PAGES	ILLUS.	FEATURES
U.S.	Eng.		Unclass.	Jan'43	12	9	photos, diagrs, graphs

ABSTRACT

Torsions tests were made on two sheet specimens, one of 10-inch another of 30-inch rib spacing. Normal pressure was applied by admitting compressed air through a regulating valve into the specimen. Outward acting normal pressure raised critical shear stress; percentage increase was considerably greater for 30-inch spacing. Torsional stiffness was not affected. It was also concluded that loading of the specimen until buckling occurred did not appreciably injure the specimen; however, permanent buckles did lower critical shear stress.

NOTE: Requests for copies of this report must be addressed to: N.A.C.A., Washington, D. C.