Reproduced by

DOCUMENT SERVICE CENTER

ARMED SERVICES TECHNICAL INFORMATION AGENCY

U. B. BUILDING, DAYTON, 2, OHIO

REEL-C 6192

A.T.I 152293

"NOTICE: When Government or other drawings, specifications or other data are used for any purpose other than in connection with a definitely related Government procurement operation, the U.S. Government thereby incurs no responsibility, nor any obligation whatsoever; and the fact that the Government may have formulated, furnished, or in any way supplied the said drawings, specifications or other data is not to be regarded by implication or otherwise as in any manner licensing the holder or any other person or corporation, or conveying any rights or permission to manufacture, use or sell any patented invention that may in any way be related thereto."

UNCLASSIFIED

UNCLASSIFIED

ATI 152 293 (Copies obtainable from ASTIA-DSC)

Signal Corps Engineering Labs., Squier Signal Lab., Fort Monmouth, N.J. (Tech Memo No. M-1344)

Measurement of Transmission Unbalance of Dual Coaxial and Twin Conductor Cable - and Appendix

Bady, Isidore 26 Dec'50 13pp. photos, diagr

Cables, Coaxial - Testing
Cables, Radio frequency
Transmission lines
Electronics (3)
Testing (11)

UNCLASSIFIED

UNCLASSIFIED

TECHNICAL MEMORANDUM NO. [illegible]

MEASUREMENT OF TRANSMISSION UNDERWATER

SIGNAL, SOUND AND THEIR CORRELATION

[illegible] 25 OCTOBER [illegible]

SIGNAL CORPS ENGINEERING LABORATORIES

FORT MONMOUTH, N. J.

SIG C PROJ NO 2000-1

DA PROJ NO [illegible]

UNCLASSIFIED

UNCLASSIFIED

MEASUREMENT OF TRANSMISSION UNBALANCE OF DUAL COAXIAL AND TWIN CONDUCTOR CABLE

BY

ISIDORE BADY

26 DECEMBER 1950

Official: G.W. Rogers.

M-1344

Copy No. 13

Signal Corps Proj. No. 2006-1
Dept. of the Army Proj. No. 3-26-00-601

PERFORMANCE TEST SECTION
COMPONENTS AND MATERIALS BRANCH
SQUIER SIGNAL LABORATORY
FORT MONMOUTH, NEW JERSEY

UNCLASSIFIED

MEASUREMENT OF TRANSMISSION UNBALANCE OF
DUAL COAXIAL AND TWIN CONDUCTOR CABLE

TABLE OF CONTENTS

TEXT:

	PAGE
1. Foreword and Purpose	1
2. Summary	1
3. Discussion	1
a. Definition of Transmission Unbalance and Basic Method of Measurement	1
b. Description of Parts	2
(1) Junction Box	2
(2) Terminating Box	3
c. Preparation of Test Cable, and Test Procedures	3
d. Miscellaneous	4
(1) Terminating Coil	4
(2) Impedance of RG-23/U and RG-22A/U Cable	5
(3) Input Resistors	6

APPENDIX:

1. Proof that Impedance of Terminating Coil Does Not Effect Accuracy of Measurement

PHOTOGRAPHS:

Fig. 1 - Basic Diagram of Test Set to Measure Transmission Unbalance

Fig. 2 - Views of Junction Box and Cable Ends Prepared for Test

Fig. 3 - Views of Terminating Box, Exterior, Front View

Fig. 4 - Views of Terminating Box, Interior, Front View

Fig. 5 - View of Terminating Box, Interior, Side View

Fig. 6 - Test Set to Measure Transmission Unbalance

TM-M-1344

MEASUREMENT OF TRANSMISSION UNBALANCE OF
DUAL COAXIAL AND TWIN CONDUCTOR CABLE

1. FOREWORD AND PURPOSE: The measurement of transmission unbalance is required in the Joint Army-Navy Specification JAN-C-17A, "Cables, Coaxial and Twin-Conductor, for Radio Frequency," for RG-23/U and RG-24/U. The measurement of balance ratio, which is essentially the inverse of transmission unbalance, is required in proposed amendment 2 of JAN-C-17A for RG-22A/U and RG-111A/U. However, there is no well defined or generally accepted method of making these measurements. It is the purpose of this Technical Memorandum to describe a test set and the test procedure developed at the Components and Materials Branch, Signal Corps Engineering Laboratories, to make these measurements.

2. SUMMARY: Transmission unbalance of dual coaxial and twin conductor cables can be measured with the test set described in this Technical Memorandum. The frequency range covered is 1 to 25 mc, and 100 to 160 mc, as required in JAN-C-17A. However, the same techniques can be used over a larger range. A description of the component parts, and a discussion of some of the factors involved in the design of the test set are included in this report.

3. DISCUSSION:

a. Definition of Transmission Unbalance and the Basic Method of Measurement: The definition of transmission unbalance and the basic method of its measurement, as described in this Technical Memorandum, is as follows:

Refer to Figure 1. This shows the basic test equipment set up to measure a twin conductor cable. However, the following discussion applies equally well for dual coaxial cable. Note that the resistors R1 and R2 have been selected to be equal to one another to a very close tolerance, and similarly, the two resistors R3 and R4 have been selected to be equal to a very close tolerance. It is not necessary for R1 and R2 to be equal to R3 and R4, but all of these resistors should be equal the matching resistance of the cable to within a few percent. Consider the case when R1 and R2 are connected to the signal generator. If the two halves of the cable are completely alike, the voltages across the terminating resistors R3 and R4 will be equal in magnitude and phase, and there will be zero voltage difference between the high (ungrounded) ends of R3 and R4. However, if there is some difference between the two halves, the voltages across R3 and R4 will be unequal in magnitude, phase, or both, and a voltage difference will exist between the high (ungrounded) ends of R3 and R4. The transmission unbalance of the test cable can be defined as the ratio of the vector difference between the two voltages across the terminating resistors to one half the vector sum of the two voltages.

It is thus necessary to measure the ratio of two voltages to determine transmission unbalance. Consider again the case when resistors R1 and R2 are both connected to the signal generator. The current flowing through the terminating coil will be proportional to the vector difference between the two voltages across the terminating resistors. Hence the current through the pick up coil and the reading on the VTVM will be proportional to the vector difference between the voltages across the terminating resistors. Consider now the case when R1 is grounded. Assuming (for themoment) that the impedance of the terminating coil is very high compared to the matching resistors, it is

apparent that the voltage across R4 will be the same as originally, when R1 was connected to the generator. For all practical purposes, this is one half the vector sum of the voltages across the terminating resistors in the original condition. This voltage is across the terminating coil, since the impedance of the terminating coil is assumed very high compared to R3 and R4. Hence the ratio of the reading of the VTVM when R1 is connected to the signal generator to the reading of the VTVM when R1 is connected to ground is equal to the transmission unbalance of the test cable.

The following formal definition of transmission unbalance is contained in paragraph F-22 of the Joint Army-Navy Specification JAN-C-17A, "Cables, Coaxial and Twin Conductor, For Radio Frequency."

"The transmission unbalance of a dual coaxial transmission line which is terminated in its characteristic impedance (center tapped to shield) is defined as the ratio of the magnitude of the vector difference of the voltages across each half of the terminating resistor to one half the magnitude of the vector sum of the two voltages."

The term balance ratio, which is the inverse of transmission unbalance, is defined in paragraph F-23, amendment 2 of JAN-C-17A as follows: "The Balance Ratio is measured and defined as follows: The cable under test is connected between a suitable generator and receiver matched to 95 ohms input impedance. A voltage V1 is applied between the two conductors, and the receiver output noted. A voltage is then applied between the two conductors tied together and ground and raised to a value V2 so that the receiver output is the same. The ratio V2/V1 shall be defined as the balance ratio."

b. Description of Parts:

(1) Junction Box: The function of the junction box is to provide for connections between the cable, input resistors, and generator. A photograph of the junction box used for RG-22A/U and RG-111A/U is shown in Figure 2. The junction box used for RG-23/U and RG-24/U is identical except that the opening for the test cable at the input end is a little larger due to the fact that RG-23/U and RG-24/U are larger cables, than RG-22A/U and RG-111A/U. The cable is held to the junction box by means of a simple braid clamp. A pair of small brass coupling bars are used to connect the resistors to the inner conductors of the cable. The use of these small bars makes it unnecessary to solder the conductors to the resistors. Additional small bars are used to make it convenient to connect the input resistors to the signal generator or to ground, as desired. Care must be taken in constructing the junction box to preserve a very high degree of symmetry for the two halves of the cable and their connections. The stray capacity and stray inductance of both must be as identical as possible. The matching resistors R1 and R2 should be equal to one another within as close a tolerance as possible. In the case of RG-23/U and RG-24/U where relatively low transmission unbalances will be encountered, it is desirable that R1 and R2 do not differ by more than 0.25%. In the case of RG-22A/U and RG-111A/U, where higher transmission unbalances are encountered it is desirable that R1 and R2 do not differ by more than 1%. Care must also be taken to select matching resistors that have good high frequency qualities. It has been found that a pair of ordinary 50 ohm composition resistors that were matched to within 0.1 percent when measured on a DC Wheatstone Bridge, nevertheless

differed by about 0.5 percent at 25 megacycles.

The resistance of R5 should be about one tenth or less of the matching resistors. Its function is to ensure that the impedance of the generator, as seen by the input resistors, is low.

(2) Terminating Box: The terminating box contains the terminating coil, the terminating resistors, the pick up coil, and the detector. Photographs of the terminating box are shown in Figures 3, 4, and 5. The test cable is held to the terminating box by means of a braid clamp. A pair of small brass coupling bars connect the terminating coil to the inner conductors of the test cable. The terminating resistors are connected between the brass bars and ground. The comments made in section 3b(1) about resistors R1 and R2 in the junction box, apply equally well to resistors R3 and R4 in the terminating box. The terminating resistors are enclosed in a little compartment by themselves, in order to shield them from the terminating coil. The reason for this is that the current in the resistors may be comparable in some cases to the current in the terminating coil, and if the electromagnetic field of this current were to reach the pick up coil, a serious error would result. The factors involved in the choice of inductance for the terminating coil are discussed in section 3d(1). The inductance of the pick up coil should be such that it can be tuned over the desired frequency range conveniently. In the terminating box that is used with RG-23/U and RG-24/U, where the test frequency band is 1 to 25 mc, the inductance of the entire coil is 2.5 microhenries. The variable capacitor in the terminating box can tune this coil from 25 mc to about 10 mc. A type BNC receptacle is connected to the capacitor so that external capacity can be added easily, and so cover the entire frequency range. In the terminating box used with RG-22A/U, and RG-111A/U, where the test frequency band is 100 to 160 mc, the inductance of the entire pick up coil is 0.3 microhenries. The variable capacitor can tune the coil over the entire test frequency band. Tuning the pick up coil can be dispensed with if the VTVM has adequate sensitivity so as not to require the increased voltage that the tuning brings about, or if a signal generator with a large amount of power is available. Also, a sensitive radio receiver may be used in place of a VTVM. In this case, the crystal detector network is removed, and the pick up coil need not be tuned.

The pick up coil is shielded so as to prevent capacitive coupling to the terminating coil. Hence, the fact that the terminating coil is well above ground potential, does not induce a voltage in the pick up coil. However, the shielding is such as not to prevent the current in the terminating coil from inducing a voltage in the pick up coil The shield consists of a metal can covering the pick up coil. The shield contains two windows, one at each side of the can facing the terminating coil. In front of each window there is a row of metal rods. One end of each rod is soldered to a brass bar which is in turn soldered to the can; however, the other end of each rod is open. This constitutes a faraday shield, which prevents capacitive coupling, but permits the current in the terminating coil to induce a voltage in the pick up coil.

c. Preparation of Test Cable, and Test Procedure: The cable ends are prepared as shown in Figure 2, and then connected to the junction and terminating boxes. The appropriate matching resistors must of course be used.

Discussions of matching resistors are contained in sections 3b(1), 3b(2), and 3d(3). The signal generator and VTVM are connected. One input resistor is connected to the high terminal of the signal generator in the junction box and the other connected to ground. The signal generator is set at a test frequency, and the attenuator in the signal generator set at a convenient value. The pick up coil is tuned for maximum deflection on the VTVM and the reading noted. The grounded input resistor is now connected to the high terminal of the generator and the attenuator setting of the signal generator decreased till the VTVM reads the same as originally. The ratio of the initial to final setting of the attenuator (converted to a voltage ratio) is the transmission unbalance at that frequency. This procedure is repeated at other frequencies throughout the test band. The number of frequencies through the test frequency band at which measurements are to be taken will depend on whether the test results indicate a smoothly varying transmission unbalance, or one with sharp maxima and minima. In any event, in the 1 to 25 mc band measurements should be made at intervals of not greater than 1 mc between 20 and 25 mc and at intervals not greater than 2 mc in the interval between 1 and 20 mc. In the 100 to 160 mc band, measurements should be made at intervals of not greater than 5 mc. In either frequency band, if a maximum in transmission unbalance is indicated between two test frequencies, additional tests should be made between these frequencies to definitely establish the maximum.

An alternate procedure is as follows: With one of the input resistors grounded, and starting with the highest test frequency, set the attenuator to secure a convenient reading of the VTVM. Note the attenuator setting. Decrease the frequency in suitable steps, tuning the pick up coil each time, and noting the setting of the attenuator at each step necessary to give the same VTVM reading. This is done till the entire frequency band is covered. The same procedure is now followed, but with both input resistors connected to the high terminal. The transmission unbalance at each test frequency can readily be determined.

The measured transmission unbalance may depend to a small extent, on which input resistor is connected to ground, as indicated in the appendix. However, the difference is very small for small transmission unbalances. If relatively high transmission unbalances are encountered (greater than about 0.1) measurements should be made with each input resistor connected to ground in turn. If there is an appreciable difference in the measured transmission unbalances the true value is very close to the average of the two measurements.

d. Miscellaneous:

(1) Terminating Coil: In section 3a of this report it was assumed, for the purpose of discussion, that the impedance of the terminating coil is high. It is important to determine just how high the impedance must be in order to ensure accurate measurements. An analysis of this factor is made in the appendix. The analysis shows that the measured transmission unbalance is independent of the impedance of the terminating coil. The only effect of a very low impedance would be a decrease in the sensitivity of the system. It should be noted that fairly large standing waves may exist in the test cable if the terminating coil has a low impedance, and the magnitude of the standing waves will be different depending on whether

or not one of the input resistors is connected to ground. However, the analysis is valid despite this.

The higher the impedance of the terminating coil, the smaller will be the voltage induced in the pick up coil for a fixed voltage across the terminating coil. This follows from the fact that for a fixed voltage across its input, the flux induced by a coil of the dimensions used in the terminating coil is roughly inversely proportional to the number of turns. Hence, stray voltages induced in the pick up coil by imperfect shielding will be proportionately more significant the higher the impedance of the coil. It is therefore desirable to keep the inductance of the terminating coil to a reasonably low value. In measuring RG-23/U and RG-24/U cable, the terminating coil has an inductance of approximately 3.9 microhenries. Its impedance at 25, 10, and 3 mc is 610, 245, and 73 ohms respectively. When the balance of the equipment is checked by connecting the junction box to the terminating box by means of a very short length of cable, it is found that the unbalance is less than 0.005 over the entire test frequency band. In measuring RG-22A/U and RG-111A/U cable, the terminating coil has an inductance of approximately 0.5 microhenries. Its impedance at 100 and 160 mc is 315 and 500 ohms respectively. The unbalance of the equipment is less than 0.01 from 100 to 160 mc.

(2) Impedance of RG-23/U and RG-22A/U Cable: The RG-23/U (and RG-24/U) cable consists of two separately shielded coaxial cables. Each of the coaxial cables has an impedance of 62.5 ohms. When the RG-23/U is operated in a balanced manner (also called series operation, or push-pull operation), the impedance of the cable is 125 ohms, the sum of the impedance of the separate parts. When the RG-23/U cable is operated in an unbalanced manner (also called parallel operation, or push-push operation), the impedance of the cable is 31.25 ohms, or half the impedance of each separate part. The impedance when operating in an unbalanced manner is thus one fourth the impedance when operating in a balanced manner. If the cable is terminated with a resistor center tapped to ground, the cable will be properly terminated for balanced and unbalanced operation when each half of the resistor is 62.5 ohms.

The RG-22A/U (and RG-111A/U) cable consists of a pair of inner conductors surrounded by a shield. Since they are not separately shielded, it is not possible to make an analogy to RG-23/U and consider the cable as being made up of two separate cables with the same properties that exist in the RG-23/U cable. The impedance of the RG-22A/U cable when operated in a balanced manner is 95 ohms, the value given in the specification sheet for the cable. The impedance of the cable when operated in an unbalanced manner is about 45 ohms. This figure was obtained by substitution of the constants of the cable as given in the specification sheet, in formula 1 on page 325 of the "Reference Data for Radio Engineers," third edition, published by the Federal Telephone and Radio Corp. The impedance of the cable operated in an unbalanced manner is thus one half, and not one fourth of the impedance when operated in a balanced manner. If the RG-22A/U cable is terminated with a resistor center tapped to ground, each half of the resistor should be 45 ohms for balanced operation, and 90 ohms for unbalanced operation. It will be noted that in the procedure outlined for measuring balance ratio, as given in the proposed amendment 2 to JAN-C-17A, it will not be possible to

match the receiver properly with the same terminating resistors for both conditions, (a) when the voltage is applied between the two conductors, and (b) when the voltage is applied between both conductors tied together, and ground.

(3) Input Resistors: In the definition of transmission unbalance given in Paragraph F-22 of JAN-C-17A, it is required that the transmission line be terminated in its characteristic impedance, but nothing is said of impedance matching at the input end. In the definition of balance ratio included in the specification sheet for RG-22A/U, the input is matched for one condition, but not for another. It is therefore pertinent to inquire how the value of the input resistors effects the measurements. A complete analysis of large mismatches in the input resistors is complicated. However, an example will suffice to show that this would effect the measurement. Refer to Fig. A-3 in the appendix. Let us suppose that the only cause of unbalance is the fact that one half of the cable is a little different in electrical length than the second half, but that in every other way the cables are equal and both conform to all nominal specifications. If the input resistors are matched to the test cable, then B will equal 1. Hence the cable can be replaced by an equivalent circuit of two branches in which the equivalent resistance of each branch is equal, (since the equivalent resistance of a transmission line terminated in its matching impedance is independent of its length) but with different equivalent voltages. However, if the input resistors are not equal to the matching resistance (though equal to one another), the equivalent impedances as well as the equivalent voltages will depend on the electrical length, and both parameters will be different for the two branches. Hence, the measured transmission unbalance will be different from that measured using matched input resistors.

Isidore Bady
ISIDORE BADY
Electrical Engineer

Approved by:
Thomas M. Child
THOMAS M. CHILD
Chief, Performance Test Section

TMC:IB:cmt

APPENDIX

1. Proof that Impedance of Terminating Coil Does Not Effect Accuracy of Measurement.

The circuit for measuring transmission unbalance is given in Figure 1. The circuit shown below is the equivalent of that circuit, and is more convenient for the following analysis.

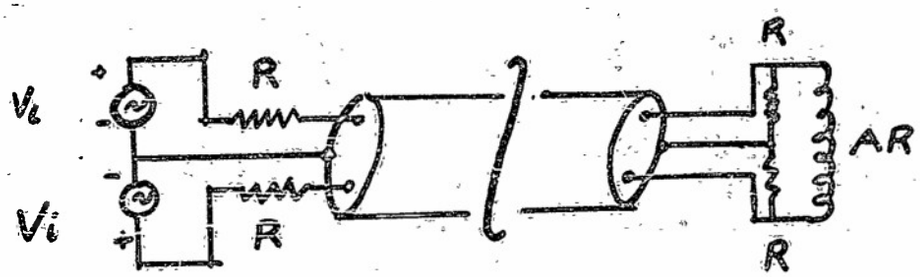

Fig. A-1

V_i: Input voltages; both equal and in phase

R: Matching resistors (for convenience, all equal)

A: Ratio of impedance of terminating coil to impedance of R.

In the case of zero transmission unbalance, the circuit in Fig. A-1 can be replaced by that shown in Fig. A-2.

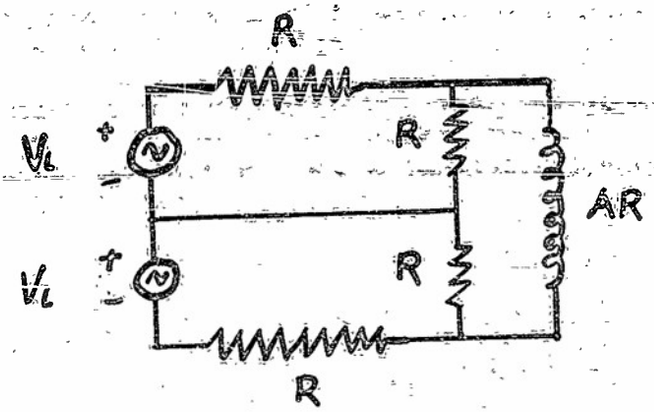

Fig. A-2

In the event that one half of the cable is in any way different from the other half, the transmission unbalance will be greater than zero. For convenience let us assume that the top half of the cable conforms exactly to the nominal specifications, and that the bottom half deviates in some way. In that case, Fig. A-2 becomes;

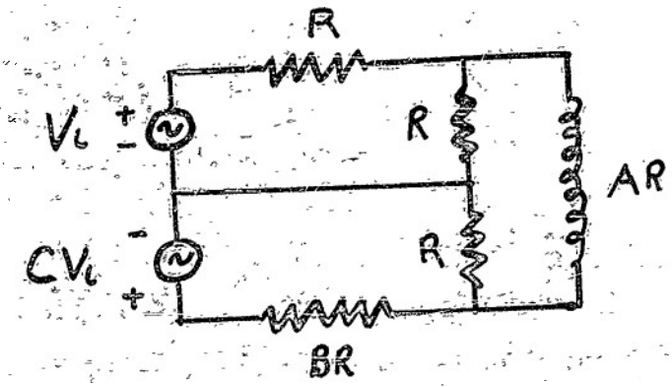

Fig. A-3

If the transmission unbalance is due to the bottom half of the cable having and electrical length different from that of the top half, but still having the nominal impedance, then B would equal 1. C would have a small phase angle other than zero, but its absolute magnitude would equal 1. If the transmission unbalance is due to the fact that the bottom half has an attenuation other than nominal, but in all other respects conforms to nominal, B would again equal one. The absolute magnitude of C would be less than one, but its phase angle would be zero. If the transmission unbalance is due to the fact that the impedance of the bottom half of the cable is difference from nominal, then C and B will in general be complex.

Let us consider now that A is infinite. Using the rigorous definition of transmission unbalance, as defined in par. F-22 of JAN-C-17A (See Section 3a of this Technical Memorandum), the transmission unbalance of the network shown in Figure A-3 is obtained as follows:

Difference of voltages across terminating resistors

$$= V_i\left[\tfrac{1}{2} - \frac{C}{1+B}\right] = V_i\,\frac{1+B-2C}{2(1+B)}$$

One half the sum of voltages across terminating resistors

$$= \tfrac{1}{2} V_i\left[\frac{1}{2} + \frac{C}{1+B}\right] = \frac{1}{2} V_i\left[\frac{1+B+2C}{2(1+B)}\right]$$

$$\text{Transmission Unbalance} = \frac{2(1+B-2C)}{1+B+2C} \quad \text{------} \quad (1)$$

In the actual test procedure, one half the sum of the voltages is not actually obtained. Instead the procedure calls for short circuting the top or bottom signal generator. If the top signal generator is shorted, the voltage across the terminating coil (A infinite) is $\left(\frac{CV_i}{1+B}\right)$

and the measured transmission unbalance is

$$V_i \frac{1+B-2C}{2(1+B)} \times \frac{1+B}{CV_i} = \frac{1+B-2C}{2C} \quad \cdots\cdots (2)$$

If the bottom signal generator is shorted, the measured transmission unbalance is

$$V_i \frac{1+B-2C}{2(1+B)} \times \frac{2}{V_i} = \frac{1+B-2C}{(1+B)} \quad \text{------} (3)$$

It will be noted that for values of B and C close to 1, the transmission unbalance obtained in equation (1) is very close to the average obtained from equations (2) and (3).

Let us now consider the case when A is finite. Referring to Fig. A-3 it will be noted that the voltage across AR is given by

$$\frac{\begin{vmatrix} 2R & 0 & V_i \\ 0 & R(1+B) & -CV_i \\ -R & -R & 0 \end{vmatrix}}{\begin{vmatrix} 2 & 0 & -1 \\ 0 & 1+B & -1 \\ -1 & -1 & 2+A \end{vmatrix}} \times \frac{AR}{R^3}$$

$$= \frac{AV_i(1+B-2C)}{2(1+B)(2+A)-(1+B)-2}$$

$$= \frac{AV_i(1+B-2C)}{1+3B+2A+2AB}$$

If the top signal generator is shorted, the voltage across AR can be determined as follows:

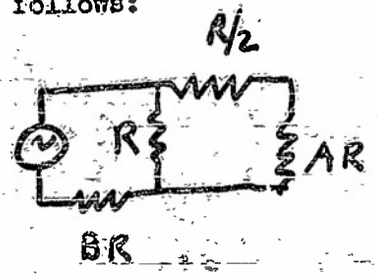

Fig. A-4

The voltage across R/2 in series with AR is

$$CV_i \frac{\frac{\frac{1}{2}+A}{\frac{3}{2}+A}}{B+\frac{\frac{1}{2}+A}{\frac{3}{2}+A}} = CV_i \frac{\frac{1}{2}+A}{\frac{3}{2}B+AB+\frac{1}{2}+A}$$

$$\text{Voltage across AR} = CV_i \frac{\frac{1}{2}+A}{\frac{3}{2}B+AB+\frac{1}{2}+A} \times \frac{A}{\frac{1}{2}+A}$$

$$= CV_i \frac{2A}{1+3B+2A+2AB}$$

The transmission unbalance in this case is

$$\frac{1+B-2C}{2C} \quad \text{- - - - -} \quad (4)$$

Equation (4) is seen to be exactly the same as equation (2).

If the bottom signal generator is shorted, the voltage across AR can be obtained as follows:

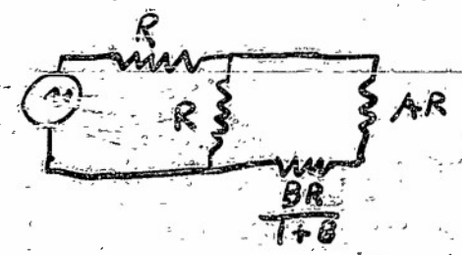

Fig. A-5

The voltage across AR in series with $\frac{BR}{1+B}$ is

$$V_i \frac{\dfrac{A+\frac{B}{1+B}}{1+A+\frac{B}{1+B}}}{1+\dfrac{A+\frac{B}{1+B}}{1+A+\frac{B}{1+B}}} = V_i \frac{A+\frac{B}{1+B}}{1+2A+\frac{2B}{1+B}} = V_i \frac{A+AB+B}{1+3B+2A+2AB}$$

The voltage across AR is

$$V_i \frac{A+AB+B}{1+3B+2A+2AB} \times \frac{A}{A+\frac{B}{1+B}}$$

$$= V_i \frac{A(1+B)}{1+3B+2A+2AB}$$

The measured transmission unbalance is

$$\frac{1+B-2C}{1+B} \quad \text{- - - - - - - - - (5)}$$

Equation (5) is thus exactly the same as equation (3).

It is thus proved that the presence of the terminating coil does not introduce any errors.

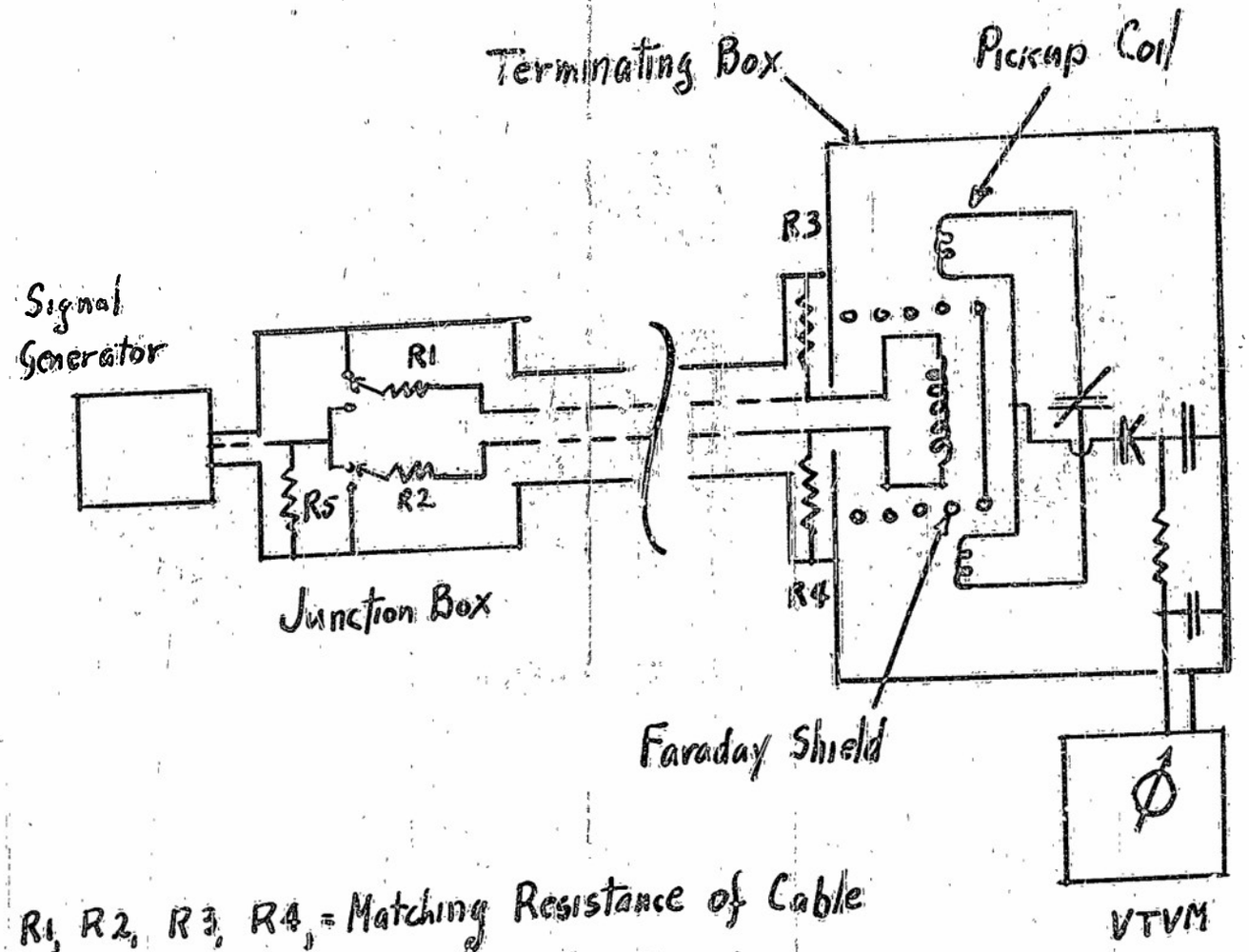

R1, R2, R3, R4, = Matching Resistance of Cable

R5: One tenth or less of matching Resistance

Fig 1. Basic Diagram of Test Set to Measure Transmission Unbalance

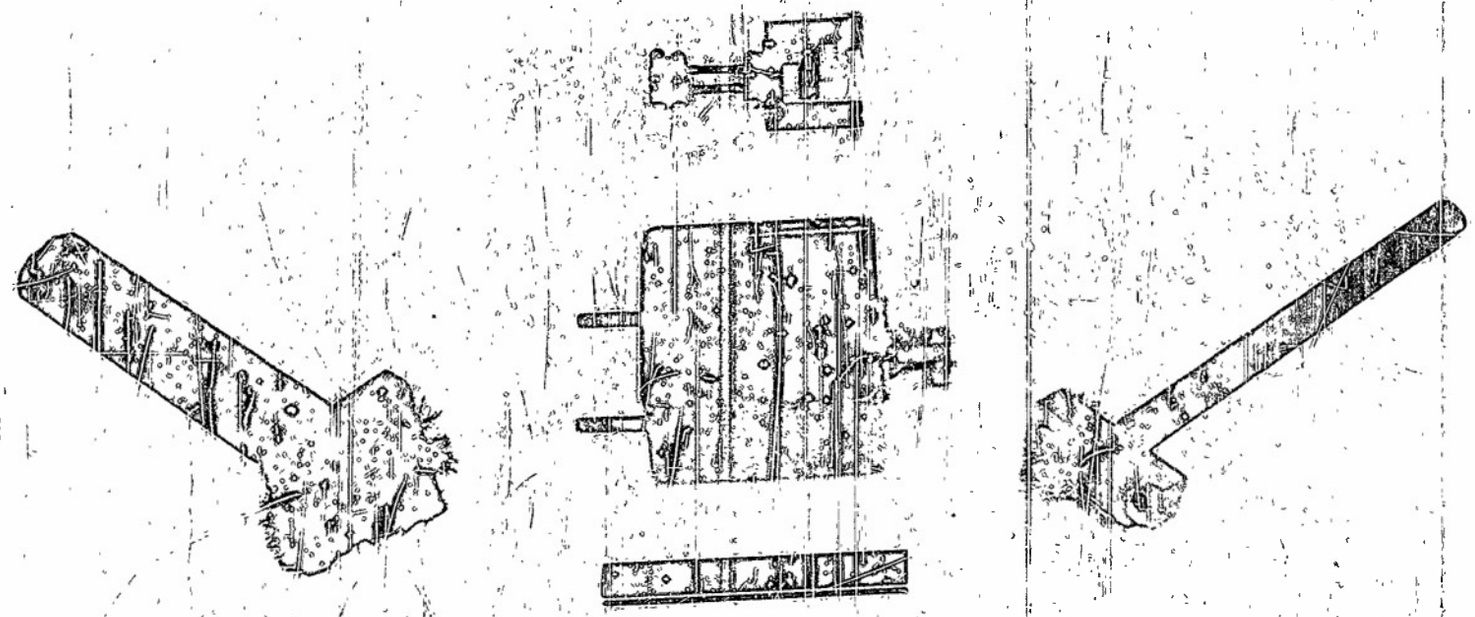

UNCLASSIFIED

JUNCTION BOX and CABLE ENDS . (Laboratory Test)

Overall Group View . Showing Items Prepared for Test

SIGNAL CORPS ENGINEERING LABORATORIES

NO. SCEL 29445-X

DATE 1-10-51

FIGURE 2

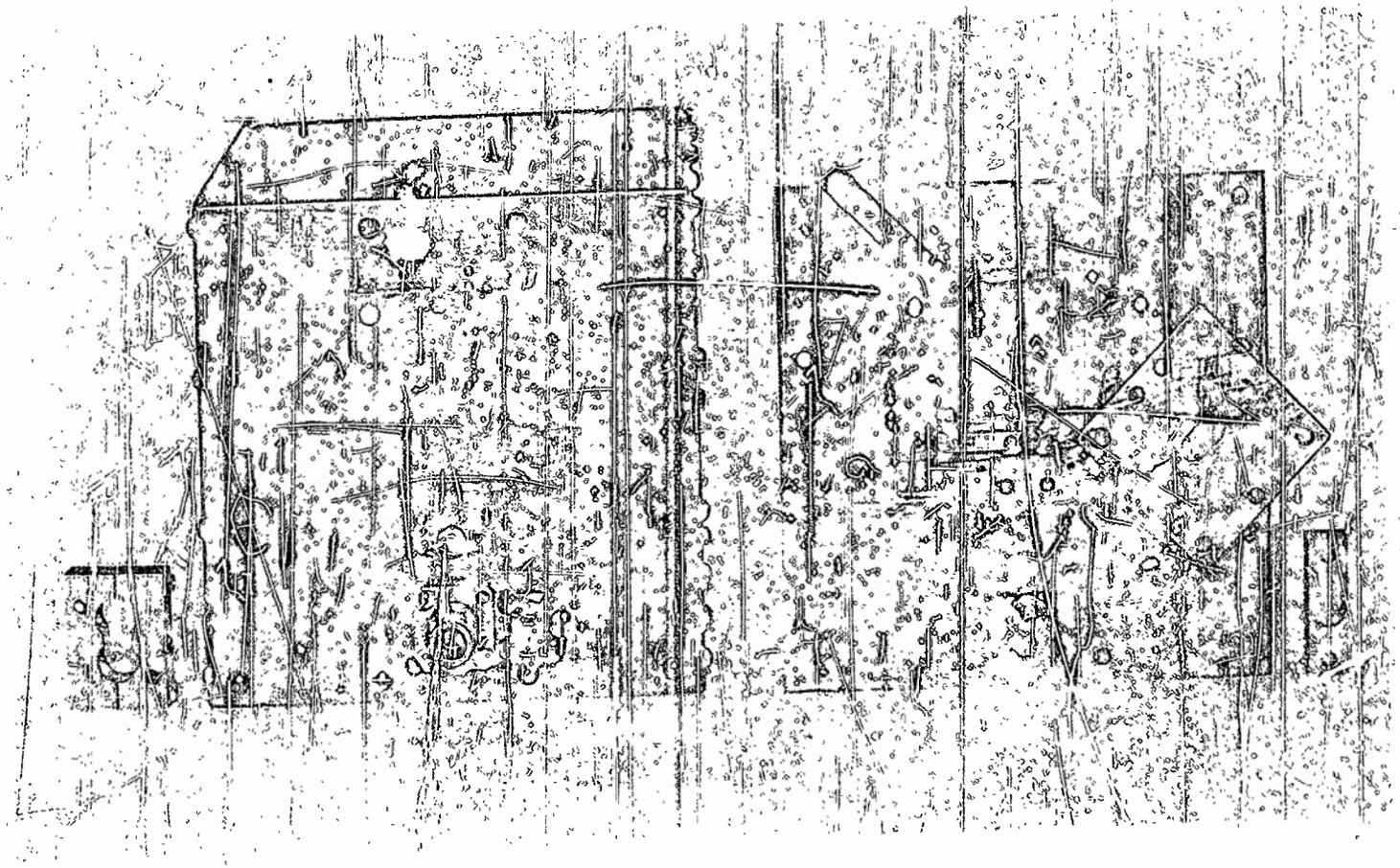

UNCLASSIFIED

TERMINAL BOXES . (Laboratory Test)
Exterior Front View . Showing (Left to Right), Box for Use with RG-23/U,
Box for Use with RG-22-A/U

DATE 1-10-51 SIGNAL CORPS ENGINEERING LABORATORIES NO. SCEL 29446-X

FIGURE 3

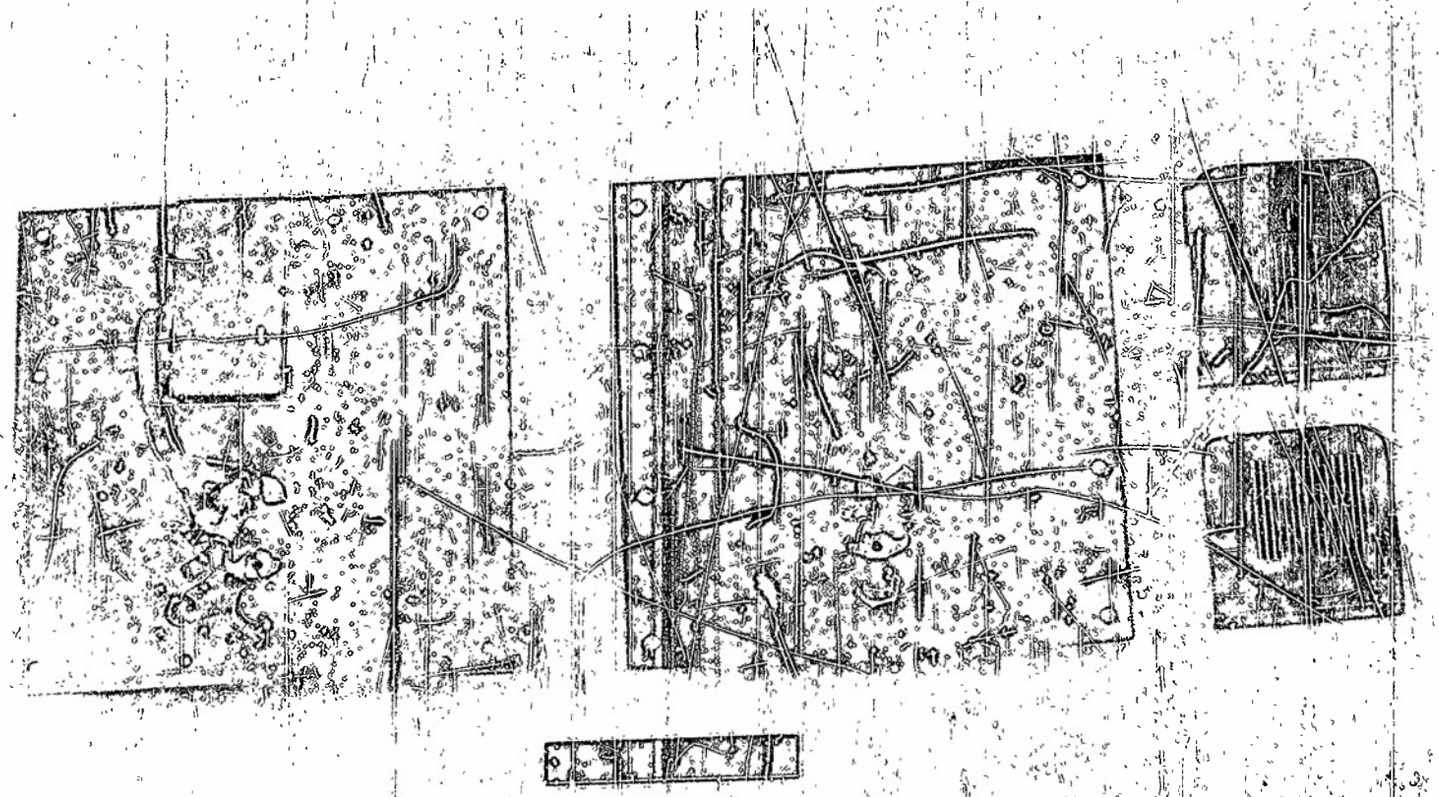

UNCLASSIFIED

FIGURE 4

TERMINAL BOXES . (Laboratory Test)
Group View . Showing (Left to Right), Box for Use with RG-23/U, Box for Use with RG-22-A/U, and Shield Can Taken from Box for Use with RG-22-A/U

DATE 1-10-51 SIGNAL CORPS ENGINEERING LABORATORIES NO. SCEL 29447-X

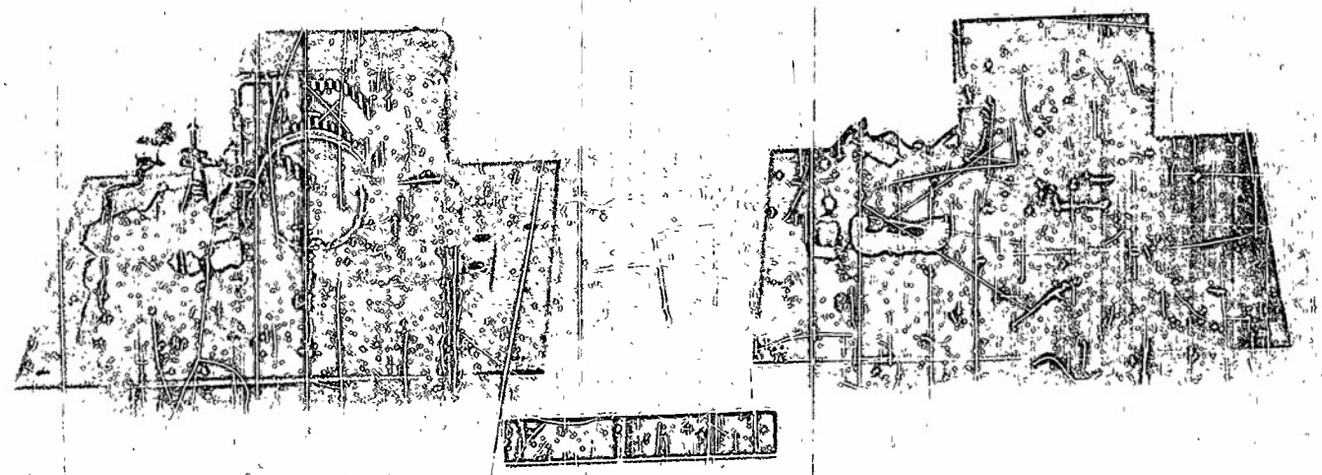

UNCLASSIFIED

TERMINAL BOXES . (Laboratory Test)
Interior Side View . Showing (Left to Right), Box for Use with RG-23/U (Part of Shield Can Removed), Box for Use with RG-22-A/U

FIGURE 5

DATE 1-10-51 SIGNAL CORPS ENGINEERING LABORATORIES NO. SCEL-29448-X

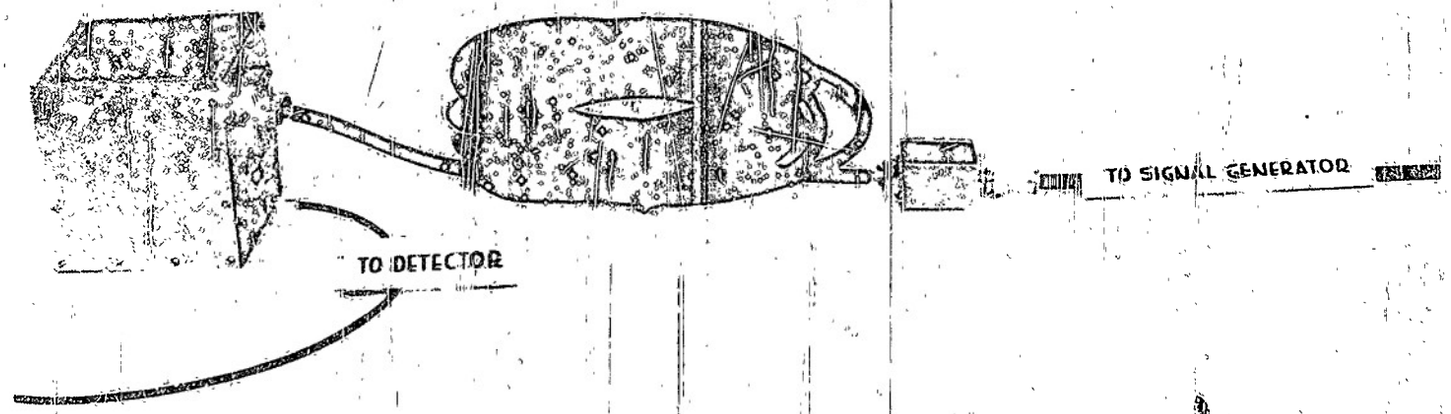

UNCLASSIFIED

TEST SET, to MEASURE TRANSMISSION UNBALANCE . (Laboratory Test)

Group View . Showing Test Set-up

SIGNAL CORPS ENGINEERING LABORATORIES

NO. SCEL 29449-X

DATE 1-10-51

FIGURE 6