Reproduced by

CADO

CENTRAL AIR DOCUMENTS OFFICE

WRIGHT-PATTERSON AIR FORCE BASE - DAYTON OHIO

REEL-C 4855

A.T.I 105865

"NOTICE: When Government or other drawings, specifications or other data are used for any purpose other than in connection with a definitely related Government procurement operation, the U.S. Government thereby incurs no responsibility, nor any obligation whatsoever; and the fact that the Government may have formulated, furnished, or in any way supplied the said drawings, specifications or other data is not to be regarded by implication or otherwise as in any manner licensing the holder or any other person or corporation, or conveying any rights or permission to manufacture, use or sell any patented invention that may in any way be related thereto."

UNCLASSIFIED

(UNPUBLISHED CARD) UNCLASSIFIED

ATI 105 865 (ROUTE REQUESTS FOR COPIES TO CADO THRU ADF, W-P AFB, DAYTON, OHIO, ATTN:DCNE)

NATIONAL BUREAU OF STANDARDS, WASH., D.C.

TEST OF COMMERCIAL CHROMEL-ALUMEL THERMOCOUPLES FOR JET ENGINES

ANDREW I. DAHL; PAUL D. FREEZE FEB'51 25PP PHOTOS, TABLES, DIAGRS, GRAPHS

AMC, WRIGHT-PATTERSON AIR FORCE BASE, DAYTON, O. (AF TECHNICAL REPORT NO. 6455)

THERMODYNAMICS (18) THERMOCOUPLES
THERMAL MEASUREMENT AND CONTROL (3) ENGINES, JET - TESTING

POWER PLANTS, JET AND TURBINE (5)
TESTING (17)

UNCLASSIFIED

AF TECHNICAL REPORT No. 6455 February 1951

CHUO FILE COPY

TEST OF COMMERCIAL CHROMEL-ALUMEL THERMOCOUPLES FOR JET ENGINES

Andrew I. Dahl
Paul D. Freeze

National Bureau of Standards

Limited Distribution

United States Air Force
Air Materiel Command
Wright-Patterson Air Force Base, Dayton, Ohio

Air Force-WPAFB-(A)-O-E JUN 51 50

AF Technical Report No. 6455 February 1951

TEST OF COMMERCIAL CHROMEL-ALUMEL THERMOCOUPLES FOR JET ENGINES

Andrew I. Dahl
Paul D. Freeze

Note: This report is being released as a limited publication and privileged disclosure. Distribution of all copies will be cleared with the preparing or responsible agency until June 1952, at which time it may be distributed as a general publication.

National Bureau of Standards
USAF Purchase Order No. (33-038)51-4063-E
E. O. No. 540-20

United States Air Force
Air Materiel Command
Wright-Patterson Air Force Base, Dayton, Ohio

FOREWORD

This report was prepared by the National Bureau of Standards, Washington, D. C., under USAF Purchase Order (33-038)51-4063-E. The contract was initiated under the research and development project identified by Expenditure Order No. 540-20, and it was administered under the direction of the Power Plant Laboratory, Engineering Division, Air Materiel Command with Mr. I. F. Littman and Mr. H. C. Rodean acting as project engineers.

ABSTRACT

This report presents the results of performance tests on a group of twelve Chromel-Alumel thermocouples currently being used in jet engine testing and operation. The tests include the determination of rate of response and recovery factor, and the calibration of the thermocouples for the effects of radiation and conduction losses. The results are presented in the form of tables and charts to facilitate a direct comparison of the performance characteristics of the test units.

PUBLICATION REVIEW

The publication of this report does not constitute approval by the Air Force of the findings or the conclusions contained therein. It is published primarily for the exchange and stimulation of ideas.

FOR THE COMMANDING GENERAL:

for M. C. Demler
Colonel, USAF
Chief, Power Plant Laboratory
Engineering Division

CONTENTS

	Page
Introduction	1
Description	1
Response Rate Tests	3
Recovery Factor Tests	4
Calibration Tests	6
Closure	7

TABLES

Table		Page
I	Summary of Response Rate Tests	8
II	Summary of Recovery Factor Determinations	8
III	Calibration of Thermocouples for Radiation and Conduction Effects for a Gas Flow of 2 lb/sec ft^2	9
IV	Calibration of Thermocouples for Radiation and Conduction Effects for a Gas Flow of 4 lb/sec ft^2	10
V	Calibration of Thermocouples for Radiation and Conduction Effects for a Gas Flow of 6 lb/sec ft^2	11
VI	Calibration of Thermocouples for Radiation and Conduction Effects for a Gas Flow of 8 lb/sec ft^2	12

ILLUSTRATIONS

Figure		
1	Allison Thermocouple, Al-1	13
2A	Allison Thermocouple, Al-2	13
2B	Allison Thermocouple, Al-3	13
3A	B.G. Corp. Thermocouple, BG-1	14
3B	B.G. Corp. Thermocouple, BG-2	14
3C	B.G. Corp. Thermocouple, BG-3	14
4	General Electric Co. Thermocouple, GE-1	14
5A	Pratt & Whitney Thermocouple, PW-1	15
5B	Pratt & Whitney Thermocouple, PW-2	15
6A	Pratt & Whitney Thermocouple, PW-3	15
6B	Pratt & Whitney Thermocouple, PW-4	15
7	Westinghouse Thermocouple, W-1	16
8	Apparatus for Subjecting Thermocouple Junctions to Sudden Changes in Gas Temperature	17
9	Schematic Diagram of Metering System	18
10A	Oscillograph Record	18
10B	Response Curve	18
11	Apparatus for Determining Recovery Factor	19
12	Recovery Factor Test Data	20
13	Standard and Test Thermocouples Mounted on Cover Plate	21
14	Assembly for Calibration Tests	22

INTRODUCTION

In accordance with a request from AMC (Ltr. MCREXP13/IFL/mad, 7 Sept. 1950) and in cooperation with engine manufacturers of the Aircraft Industries Association, a program of tests was undertaken to determine the performance characteristics of a group of Chromel-Alumel thermocouples currently being used in jet engine testing and operation. The thermocouples included in the tests were selected by the engine manufacturers on the basis of service requirements and previous test experience. The following performance characteristics were determined: (1) rate of response, (2) recovery factor, and (3) wall temperature effects.

DESCRIPTION OF TEST THERMOCOUPLES

A total of 12 different thermocouple units from five engine manufacturers was submitted for the tests. In most cases, only a brief general description of the unit was supplied.

A. Thermocouples submitted by Allison Division, General Motors Division.

1. Allison Part No. 6714720; abbreviated designation Al-1; shown photographically in figure 1. This is a sampling-type thermocouple with screw-type terminals. The sheath is 1/4" in diameter and has three 0.09" diameter holes on the upstream side and one 0.12" diameter hole on the downstream side. The thermocouple junction is located at the discharge port.

2. Allison Part No. EX15334; abbreviated designation Al-2; shown photographically in figure 2A. This is an exposed tip thermocouple, commonly called the pencil-type. The tip extends about 1/4" beyond the support tube.

3. Allison Part No. 6710169, Revision J; abbreviated designation Al-3; shown photographically in figure 2B. This is an exposed twisted-type junction of about No. 16 gage wire. The junction extends about 1/4" beyond the porcelain insulator and the steel sheath.

B. Thermocouples submitted by The B. G. Corporation.

1. B. G. Model A-8412X2; abbreviated designation BG-1; shown photographically in figure 3A. This is a totally-enclosed Chromel-Alumel junction, of 0.010" wires packed in aluminum oxide powder within a tapered Inconel sheath. The thermocouple junction is about 1/16" from the tip of the sheath.

2. B. G. Model M-834 Modified; abbreviated designation BG-2; shown photographically in figure 3B. This is an exposed junction of No. 18 gage wires. The junction protrudes about 3/16" beyond the insulator and the metal support tube.

3. B. G. Model M-834 Standard; abbreviated designation BG-3; shown photographically in figure 3C. This is a No. 18 gage thermocouple located within a total-temperature well.

C. Thermocouple submitted by General Electric Company

1. G. E. No. 8947403 Gr. 2 thermocouple; abbreviated designated GE-1; shown photographically in figure 4. This is a loop-type thermocouple with a butt-welded junction. The wires are about No. 18 gage and have been dressed down to be approximately rectangular in cross section.

D. Thermocouples submitted by Pratt and Whitney Aircraft

1. Manning, Maxwell and Moore Type 155A; abbreviated designation PW-1, shown photographically in figure 5A. This is a pencil-type thermocouple supported in a metal tube. Two small discs are located near the tip of the thermocouple.

2. Pratt and Whitney Part No. 153286A; abbreviated designation PW-2; shown photographically in figure 5B. This is a total-temperature type thermocouple probe with a bare junction located within the stagnation zone.

3. Pratt and Whitney Part No. 161473; abbreviated designation PW-3; shown photographically in figure 6A. This is a thermocouple which is totally enclosed in a rather short heavy tube. The thermocouple is grounded to the well, with the junction apparently welded to the end of the tube.

4. Pratt and Whitney Part No. 131149; abbreviated designation PW-4; shown photographically in figure 6B. This is a special design of thermocouple probe employing several coaxial tubes apparently as radiation screens. The thermocouple is welded to the innermost screen. The outer tube of the probe is 3/4" in diameter and 5" long. Because of the size and design of this unit it was not practicable to obtain a satisfactory radiation-conduction calibration of the thermocouple in the test facilities on hand.

E. Thermocouple submitted by Westinghouse

1. Westinghouse Jet Engine Thermocouple; abbreviated designation W-1; shown photographically in figure 7. This is an

exposed twisted-junction type of thermocouple of about No. 18 gage wire. The junction protrudes about 1/4" beyond the end of the porcelain insulator and metal support tube.

RESPONSE RATE TESTS

The rate at which a temperature-sensing element located in the gas stream of a jet engine responds to sudden changes in gas temperature is of great practical importance in the control and operation of such an engine. An acceptable control system must prevent the engine speed from increasing at an excessive rate and protect critically stressed parts from being overheated. Since a change in fuel-air ratio is normally accompanied by a simultaneous change in gas temperature, adequate protection of the power plant requires a control that will act very suddenly to limit the rate of change of gas temperature whenever it exceeds a safe value. If the control is temperature actuated, the sensing element must therefore respond rapidly when subjected to a change in temperature.

When the temperature of a gas stream in which a thermocouple is immersed is increased instantaneously, the increase, ΔT, in the temperature of the junction with time, t, thereafter is given by the equation:

$$\Delta T = (T_2 - T_1)(1 - e^{-t/\tau}) \qquad (1)$$

where T_1 = initial temperature of the junction
T_2 = final steady temperature of the junction
e = 2.7183, the base of the Naperian system of logarithms
τ = a constant

From equation (1) we may write:

$$\Delta T/(T_2 - T_1) = 1 - e^{-t/\tau} \qquad (2)$$

It is apparent from equations (1) and (2) that the quantity τ has the dimensions of time, and that at time $t = \tau$, equation (2) becomes:

$$\Delta T(T_2 - T_1) = 1 - 1/e = 0.632 \qquad (3)$$

Thus, τ is the time required for the thermocouple junction to undergo 63.2 percent of the total change in temperature to which it is subjected instantaneously. The time τ, so defined is generally referred to as the "characteristic time" of the junction. Actually it is not a characteristic of the junction alone, but of

the junction and the system in which it is immersed, so that the gas flow rate must be specified simultaneously with the characteristic time.

The apparatus used for subjecting a thermocouple junction to a sudden change in gas temperature is shown in figure 8. It consists essentially of an Inconel tube which can be held in place around the thermocouple junction by a release plate, but which, upon removal of this plate, is pulled away by a spring. Thus the junction is suddenly exposed to the hot gas stream flowing through the test section. While the Inconel tube is in position around the test junction, cooling air is forced through the tube to keep the junction temperature at a selected low value.

The metering and recording system employed is shown schematically in figure 9. The thermal emf of the junction is converted into a pulsating direct current voltage by means of a vibrating reed-type chopper. This pulsating DC voltage is amplified and fed into a direct inking Brush magnetic oscillograph. The pen of the latter instrument vibrates with a frequency of 60 cycles per second and with an amplitude which is proportional to the thermocouple emf. The envelope of the oscillograph record is thus a time record of the thermocouple emf, although not on an absolute scale. However, for the present purpose the scale is of no consequence, since it is desired only to measure the time required for the junction to undergo 63% of its total change in temperature. The time scale of each record can be established in either of two ways. For the junctions having rapid response, the 60 cycle oscillations can be counted. For the heavier junctions it is unnecessary to count the oscillations since the record paper is moved at known speeds by a synchronous motor through gears.

The response rate of each of the test thermocouples was determined at gas flow rates of 2, 4, and 6 lb/sec ft^2. In each instance the junction was subjected to a change in temperature from about 400°F to about 1000°F. A typical oscillograph record is shown in figure 10A, and a large-scale plot of the time-temperature relation is shown in figure 10B.

A summary of the observed values of the characteristic times is given in Table I.

RECOVERY FACTOR TESTS

When an immersion-type instrument, such as a thermocouple, is used to measure the temperature of a gas moving at a velocity of about 300 ft/sec or higher, the thermal effect of the impact of the gas molecules against the sensing element becomes signifi-

cant if an accurate measurement of the gas temperature is to be made. Since the magnitude of the impact effect increases as the square of the gas velocity, errors of considerable magnitude may result at high velocities unless the impact effects are taken into account.

The effectiveness of a particular thermocouple for indicating the total temperature of a high-velocity gas stream is expressed by its recovery factor, r, defined as:

$$r = (T_i - T_s)/(T_t - T_s)$$

where T_i = temperature indicated by the thermocouple junction
T_s = static temperature of the gas
T_t = total temperature of the gas

The recovery factor tests were carried out in the apparatus shown diagrammatically in figure 11. Air is supplied by a Roots-Connersville centrifugal blower having a capacity of 5000 cu ft of free air per min at a pressure of 5 lbs/in.^{2} gage. The flow rate is controlled by a valve at the blower outlet. The air flows through a straight 12-foot length of 12-in. pipe before discharging through a 4-in. nozzle to the atmosphere. A cup-type total-temperature thermocouple is mounted in the 12-in. pipe, one foot upstream from the nozzle entrance. A total pressure tube is also located in the pipe one foot upstream from the nozzle.

The junction of the thermocouple under test is supported in the air stream at the nozzle discharge. The terminal end of the couple is mounted in an aluminum block provided with an electric heating coil. A control thermocouple is located within the aluminum block. During a test, the power supplied to the heating coil was adjusted until the temperature of the block, and hence also that of the terminal end of the test thermocouple, was identical with that indicated by the junction of the test couple. Under this condition, heat losses from the junction by conduction along the thermocouple support tube are eliminated.

From the energy considerations applicable to a reversible adiabatic process, such as the flow of air through the nozzle used in the present system, it can be shown that the following relations hold at the nozzle discharge:

$$T_s = T_t(p_t/p_s)^{(\gamma-1)/\gamma} \tag{5}$$

$$T_t - T_s = V^2/2gJc_p \tag{6}$$

$$M = V/c \tag{7}$$

$$c^2 = \gamma gRT_s \tag{8}$$

where T = temperature in degrees Rankine
p = absolute pressure
C_p = heat capacity at constant pressure = 0.24 Btu/lb °F
γ = ratio of specific heats = 1.4 for air under present test conditions
g = acceleration of gravity = 32.2 ft/sec^2
J = mechanical equivalent of heat = 778 ft lb/Btu
V = velocity in ft/sec
M = Mach number
c = velocity of sound
R = gas constant = 53.3 Btu/ft^3 °F

The subscripts s and t refer to static and total conditions.

Since the total temperature and total pressure remain constant in the adiabatic expansion and compression of a perfect gas, the values of T_t and p_t observed upstream from the nozzle are applicable at the nozzle discharge. Since the nozzle discharges to the atmosphere, the static pressure (p_s) at the test thermocouple is the prevailing barometric pressure.

Thus from the observed values of T_t, $T_t - T_i$, p_t and p_s, the value of T_s at the test thermocouple, and hence also its recovery factor can be calculated from the above equations. A typical set of test data is shown in figure 12. The experimental values of $T_t - T_i$ are plotted against the velocity of the discharge from the nozzle in figure 12A. Calculated values of recovery factor are plotted against Mach number in figure 12B.

All test thermocouples exhibited recovery factors essentially independent of Mach number up to values of about $M = 0.7$. At higher values of M, the formation of local shock waves results in an unstable condition with a tendency toward higher recovery factors.

Table II summarizes the recovery factor test data. In each case the average value of recovery factor up to $M = 0.7$ is given.

CALIBRATION TESTS

The temperature attained by a thermocouple junction immersed in a stream of hot gas is seldom identical with the temperature of the gas itself, but instead is characteristic of a steady state at which the rate of heat transfer from the gas to the junction by convection is equal to the rate of heat transfer from the junction to the surroundings by radiation and conduction. In gas turbine and jet engine applications the effect of radiation losses on the indicated temperature is usually the more important, particularly at gas temperatures above 1200°F. However, conduction

effects become important when depth of immersion into the gas stream is limited and when heavy walled sheaths or supporting tubes are employed. For accurate temperature measurements, it is necessary to evaluate the radiation and conduction correction over the range of gas temperatures, gas flow rates and wall temperatures prevailing in service.

The calibration of each of the test thermocouples for the combined effects of thermal radiation and conduction was made by comparing the indications of test instrument with the indications of two silver-shielded Chromel-Alumel thermocouples which had previously been calibrated against a radiation- and conduction-compensated laboratory standard. Figure 13 is a photograph showing a test thermocouple and two silver-shielded thermocouples mounted in the cover plate of the test section. The wall temperatures were measured by means of four Chromel-Alumel junctions peened into the pipe wall, and gas flows were measured by means of a pitot tube in the gas stream and a static pressure tap in the pipe wall. Figure 14 shows the arrangement of the test equipment in the working section.

Calibration tests on each thermocouple* were made with gas temperatures ranging from 1000°F to 1500°F, wall temperatures from 800 F to 1200°F, and with gas flows of 2, 4, 6, and 8 lbs/ft^2-sec. The calibration data are summarized in Tables III, IV, V, and VI. In evaluating the corrections for radiation and conduction losses, the emf-temperature relation of the wire in the thermocouples was assumed to correspond to the standard Chromel-Alumel [illegible] table. It is believed that the corrections for radiation and conduction losses given in Tables III, IV, V, and VI are accurate to ±5°F when the corrections are less than 20°F and to one fourth of the correction when the latter exceeds 20°F.

CLOSURE

The purpose of the test program has been to obtain comparative performance data on commercial thermocouples designed for use in jet engines. This report has therefore been limited to the presentation of the observed experimental data with no discussion as to the relative merits of individual units. The results are presented in tabular form to facilitate a direct comparison of the performance characteristics of the test thermocouples.

*Because of the design and construction of thermocouple FW-4, it was not possible to obtain a satisfactory calibration of this unit.

Andrew I. Dahl

Andrew I. Dahl, In charge
Gas Temperature Measurements

Paul D. Freeze

Paul D. Freeze
Mech. Engineer

Table I. Summary of Response Rate Tests

Thermocouple Identification	Characteristic Times - Seconds at Flow Rates in lb/ft^2 sec		
	2	4	6
Al-1	18.7	12.4	10.4
Al-2	2.0	1.5	1.2
Al-3	3.6	2.8	2.2
BG-1	11.9	8.2	7.1
BG-2, Unit A	4.0	3.0	2.3
BG-2, Unit B	3.0	2.2	1.6
BG-3	16.6	12.3	8.3
GE-1	1.7	1.3	1.0
PW-1	2.1	1.5	1.2
PW-2	15.4	10.7	8.3
PW-3	18.9	13.8	11.9
PW-4	17.3	12.1	9.6
W-1	3.0	2.6	1.8

Table II. Summary of Recovery Factor Determinations

Thermocouple Identification	Average Value of Recovery Factor, M = 0.2 to M = 0.7
Al-1	0.90
Al-2	0.81
Al-3	0.82
BG-1	0.77
BG-2	0.78
BG-3	0.99
GE-1	0.70
PW-1	0.79
PW-2	0.98
PW-3	0.73
PW-4	0.92
W-1	0.75

Table III. Calibration of Thermocouples for Radiation and Conduction Effects for a Gas Flow of 2 lb/sec ft^2

Gas Temp.	Wall Temp.	Indicated Temperature										
		Al-1	Al-2	Al-3	BG-1	BG-2	BG-3	GE-1	PW-1	PW-2	PW-3	W-1
Degrees Fahrenheit												
1500	1500	1500	1500	1500	1500	1500	1500	1500	1500	1500	1500	1500
1500	1400	1440	1472	1475	1466	1473	1475	1480	1474	1475	1459	1471
1500	1300	1386	1449	1452	1438	1451	1454	1463	1451	1453	1423	1446
1500	1200	1337	1428	1432	1413	1431	1435	1448	1431	1434	1393	1425
1500	1100	1294	1410	1416	1391	1414	1420	1435	1414	1418	1367	1406
1500	1000	1259	1397	1403	1374	1401	1408	1424	1401	1406	1346	1392
1400	1400	1400	1400	1400	1400	1400	1400	1400	1400	1400	1400	1400
1400	1300	1342	1376	1377	1370	1375	1378	1382	1376	1378	1363	1374
1400	1200	1290	1354	1357	1343	1354	1360	1366	1354	1359	1331	1351
1400	1100	1244	1336	1340	1321	1337	1345	1352	1337	1343	1305	1333
1400	1000	1205	1322	1327	1305	1325	1332	1340	1324	1330	1283	1318
1300	1300	1300	1300	1300	1300	1300	1300	1300	1300	1300	1300	1300
1300	1200	1246	1279	1280	1273	1279	1281	1284	1279	1280	1267	1277
1300	1100	1200	1261	1263	1250	1261	1265	1271	1261	1263	1238	1258
1300	1000	1163	1246	1249	1232	1247	1252	1261	1247	1250	1215	1242
1200	1200	1200	1200	1200	1200	1200	1200	1200	1200	1200	1200	1200
1200	1100	1152	1181	1183	1177	1182	1184	1187	1182	1183	1171	1180
1200	1000	1111	1165	1168	1158	1166	1170	1176	1167	1169	1146	1163
1200	900	1076	1153	1156	1142	1155	1159	1167	1155	1158	1126	1150
1100	1100	1100	1100	1100	1100	1100	1100	1100	1100	1100	1100	1100
1100	1000	1057	1084	1085	1080	1085	1086	1089	1085	1086	1075	1083
1100	900	1018	1071	1072	1064	1072	1075	1080	1072	1074	1054	1069
1100	800	984	1061	1063	1050	1062	1066	1073	1062	1064	1037	1058
1000	1000	1000	1000	1000	1000	1000	1000	1000	1000	1000	1000	1000
1000	900	962	986	987	983	986	988	990	986	987	978	986
1000	800	936	976	978	969	975	978	983	975	978	961	974

Table IV. Calibration of Thermocouples for Radiation and Conduction Effects for a Gas Flow of 4 lb/sec ft^2

Gas Temp.	Wall Temp.	Indicated Temperatures										
		Al-1	Al-2	Al-3	BG-1	BG-2	BG-3	GE-1	PW-1	PW-2	PW-3	W-1
Degrees Fahrenheit												
1500	1500	1500	1500	1500	1500	1500	1500	1500	1500	1500	1500	1500
1500	1400	1466	1479	1482	1477	1481	1483	1486	1481	1483	1471	1480
1500	1300	1437	1461	1466	1458	1465	1468	1474	1465	1468	1445	1463
1500	1200	1410	1445	1453	1441	1451	1455	1464	1452	1455	1423	1449
1500	1100	1386	1434	1442	1427	1439	1445	1455	1441	1444	1405	1437
1500	1000	1366	1425	1432	1415	1430	1436	1448	1432	1435	1390	1427
1400	1400	1400	1400	1400	1400	1400	1400	1400	1400	1400	1400	1400
1400	1300	1368	1382	1384	1380	1383	1385	1387	1383	1385	1373	1382
1400	1200	1339	1366	1370	1362	1367	1372	1376	1368	1372	1350	1366
1400	1100	1314	1353	1358	1347	1356	1361	1366	1356	1361	1330	1354
1400	1000	1293	1345	1348	1336	1347	1352	1358	1347	1352	1314	1344
1300	1300	1300	1300	1300	1300	1300	1300	1300	1300	1300	1300	1300
1300	1200	1271	1285	1286	1282	1285	1287	1289	1285	1286	1276	1284
1300	1100	1245	1272	1274	1267	1272	1276	1280	1273	1275	1256	1271
1300	1000	1224	1260	1264	1254	1262	1267	1273	1263	1266	1239	1261
1200	1200	1200	1200	1200	1200	1200	1200	1200	1200	1200	1200	1200
1200	1100	1173	1186	1188	1184	1187	1189	1191	1188	1188	1179	1186
1200	1000	1150	1175	1178	1171	1177	1179	1183	1178	1179	1162	1175
1200	900	1131	1166	1169	1161	1168	1171	1177	1169	1171	1147	1166
1100	1100	1100	1100	1100	1100	1100	1100	1100	1100	1100	1100	1100
1100	1000	1076	1088	1089	1087	1089	1090	1092	1090	1090	1082	1088
1100	900	1055	1080	1080	1076	1080	1082	1086	1081	1082	1067	1079
1100	800	1036	1071	1072	1066	1073	1076	1081	1074	1075	1055	1072
1000	1000	1000	1000	1000	1000	1000	1000	1000	1000	1000	1000	1000
1000	900	979	990	992	989	990	991	993	991	991	985	990
1000	800	961	982	985	979	982	984	988	983	984	972	982

Table V. Calibration of Thermocouples for Radiation and Conduction Effects for A Gas Flow of 6 lb/sec ft^2

Gas Temp.	Wall Temp.	Indicated Temperatures										
		Al-1	Al-2	Al-3	BG-1	BG-2	BG-3	GE-1	PW-1	PW-2	PW-3	W-1
Degrees Fahrenheit												
1500	1500	1500	1500	1500	1500	1500	1500	1500	1500	1500	1500	1500
1500	1400	1476	1484	1485	1482	1484	1486	1489	1485	1486	1477	1484
1500	1300	1454	1470	1473	1466	1471	1473	1479	1472	1474	1457	1471
1500	1200	1434	1458	1462	1453	1460	1463	1470	1461	1463	1439	1459
1500	1100	1417	1448	1453	1442	1450	1454	1463	1452	1454	1425	1449
1500	1000	1402	1440	1445	1432	1443	1447	1457	1445	1447	1413	1441
1400	1400	1400	1400	1400	1400	1400	1400	1400	1400	1400	1400	1400
1400	1300	1377	1386	1387	1383	1386	1387	1389	1387	1388	1379	1386
1400	1200	1356	1374	1375	1369	1374	1376	1380	1374	1377	1360	1373
1400	1100	1338	1363	1365	1357	1364	1367	1372	1365	1368	1344	1363
1400	1000	1322	1354	1358	1348	1357	1360	1366	1358	1361	1333	1355
1300	1300	1300	1300	1300	1300	1300	1300	1300	1300	1300	1300	1300
1300	1200	1279	1288	1288	1285	1288	1289	1291	1288	1289	1281	1288
1300	1100	1260	1277	1278	1273	1277	1279	1284	1278	1279	1265	1278
1300	1000	1244	1268	1270	1263	1269	1272	1278	1270	1272	1252	1269
1200	1200	1200	1200	1200	1200	1200	1200	1200	1200	1200	1200	1200
1200	1100	1181	1189	1190	1188	1189	1191	1192	1190	1190	1184	1189
1200	1000	1164	1179	1181	1177	1180	1183	1186	1182	1182	1170	1180
1200	900	1150	1172	1173	1168	1174	1176	1181	1175	1176	1158	1173
1100	1100	1100	1100	1100	1100	1100	1100	1100	1100	1100	1100	1100
1100	1000	1083	1091	1091	1089	1091	1092	1094	1091	1092	1086	1091
1100	900	1067	1083	1084	1080	1084	1085	1089	1084	1085	1074	1083
1100	800	1053	1077	1079	1073	1076	1080	1085	1079	1080	1064	1077
1000	1000	1000	1000	1000	1000	1000	1000	1000	1000	1000	1000	1000
1000	900	985	992	993	991	992	993	994	992	993	988	992
1000	800	972	986	987	983	986	987	990	986	987	978	986

Table VI. Calibration of Thermocouples for Radiation and Conduction Effects for a Gas Flow of 8 lb/sec ft^2

Gas Temp.	Wall Temp.	Indicated Temperatures										
		Al-1	Al-2	Al-3	BG-1	BG-2	BG-3	GE-1	PW-1	PW-2	PW-3	W-1
Degrees Fahrenheit												
1500	1500	1500	1500	1500	1500	1500	1500	1500	1500	1500	1500	1500
1500	1400	1480	1486	1488	1484	1487	1487	1490	1486	1488	1480	1487
1500	1300	1462	1474	1477	1470	1475	1477	1481	1474	1477	1462	1474
1500	1200	1446	1464	1468	1458	1465	1468	1473	1465	1467	1447	1464
1500	1100	1431	1456	1460	1448	1457	1460	1467	1457	1459	1434	1455
1500	1000	1420	1449	1454	1440	1450	1454	1462	1451	1453	1424	1448
1400	1400	1400	1400	1400	1400	1400	1400	1400	1400	1400	1400	1400
1400	1300	1381	1388	1389	1386	1388	1389	1391	1388	1389	1382	1388
1400	1200	1364	1377	1379	1374	1378	1379	1383	1377	1380	1366	1377
1400	1100	1348	1368	1371	1364	1369	1371	1376	1368	1372	1352	1368
1400	1000	1336	1351	1365	1356	1362	1365	1370	1362	1365	1342	1361
1300	1300	1300	1300	1300	1300	1300	1300	1300	1300	1300	1300	1300
1300	1200	1282	1290	1290	1287	1289	1290	1292	1289	1290	1284	1288
1300	1100	1267	1281	1281	2176	1280	1282	1285	1280	1282	1270	1279
1300	1000	1254	1273	1275	1267	1273	1276	1280	1273	1275	1258	1274
1200	1200	1200	1200	1200	1200	1200	1200	1200	1200	1200	1200	1200
1200	1100	1184	1191	1192	1189	1191	1192	1193	1191	1192	1186	1190
1200	1000	1170	1183	1185	1180	1183	1185	1187	1183	1185	1173	1182
1200	900	1159	1177	1179	1172	1177	1179	1183	1177	1179	1163	1176
1100	1100	1100	1100	1100	1100	1100	1100	1100	1100	1100	1100	1100
1100	1000	1086	1092	1093	1091	1092	1093	1095	1092	1093	1088	1092
1100	900	1073	1086	1087	1083	1086	1087	1091	1086	1087	1077	1085
1100	800	1061	1081	1082	1076	1081	1083	1088	1081	1082	1069	1080
1000	1000	1000	1000	1000	1000	1000	1000	1000	1000	1000	1000	1000
1000	900	987	993	994	992	993	993	995	993	994	989	993
1000	800	977	988	990	985	987	988	991	987	989	981	988

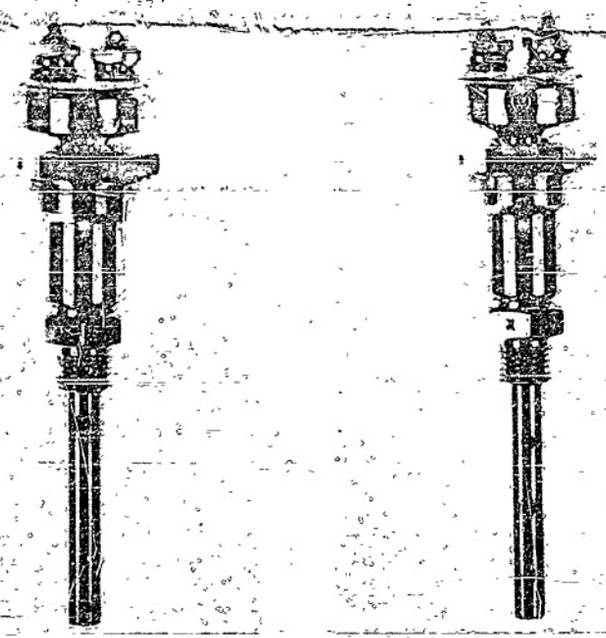

FIGURE 1. ALLISON THERMOCOUPLE, AL-1

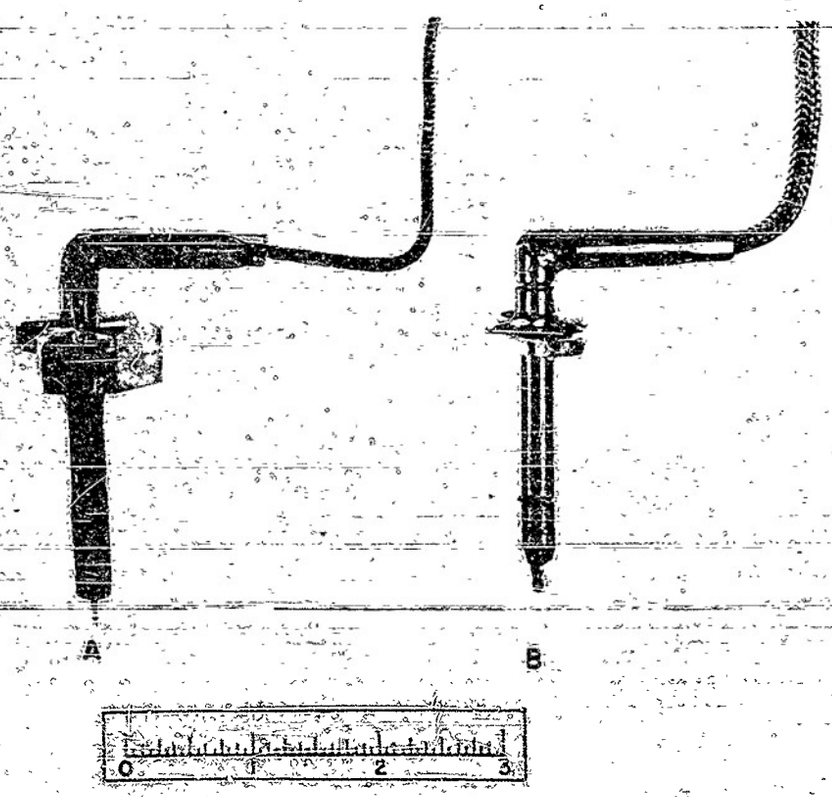

FIGURE 2. ALLISON THERMOCOUPLES ; A, AL-2; B, AL-3

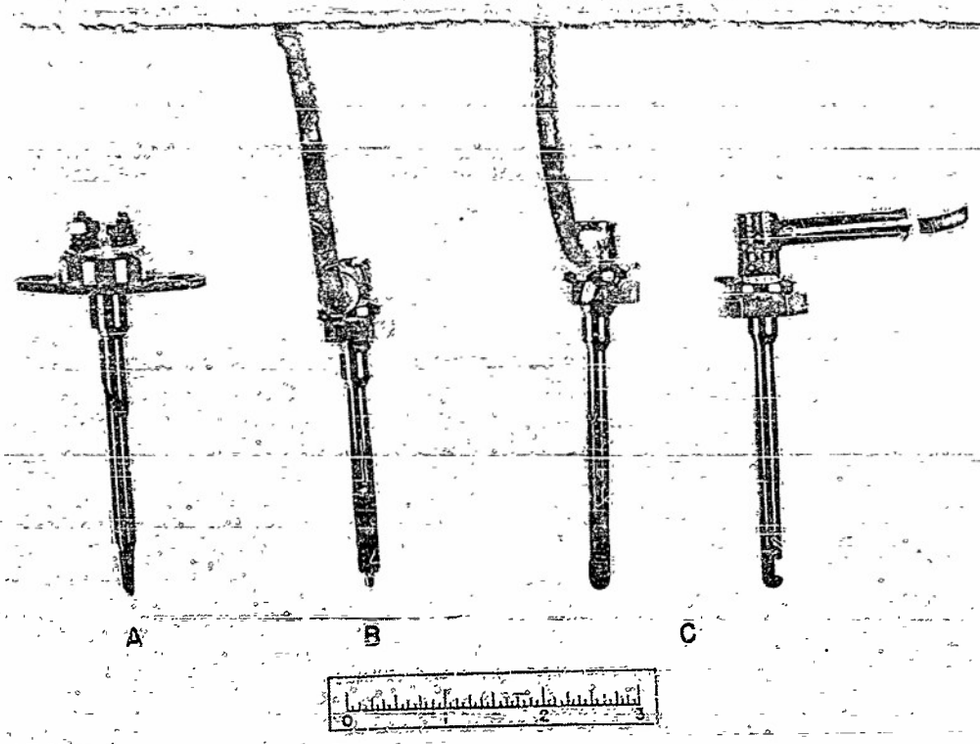

FIGURE 3. B.G. CORP. THERMOCOUPLES ; A, BG-1 ; B, BG-2 ; C, BG-3

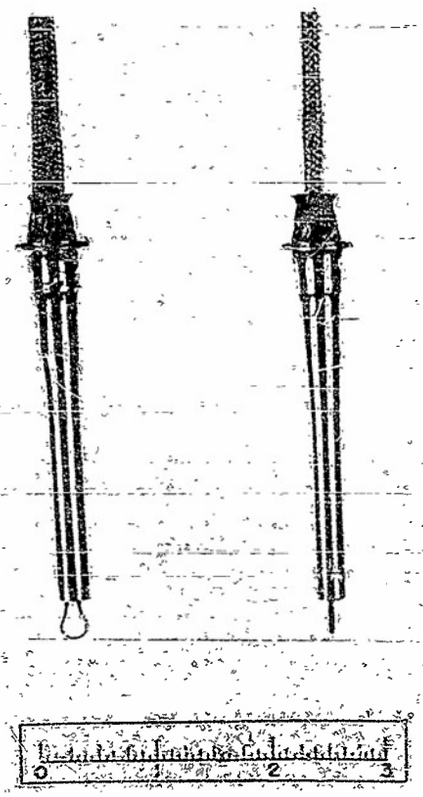

FIGURE 4. GENERAL ELECTRIC CO. THERMOCOUPLE GE-1

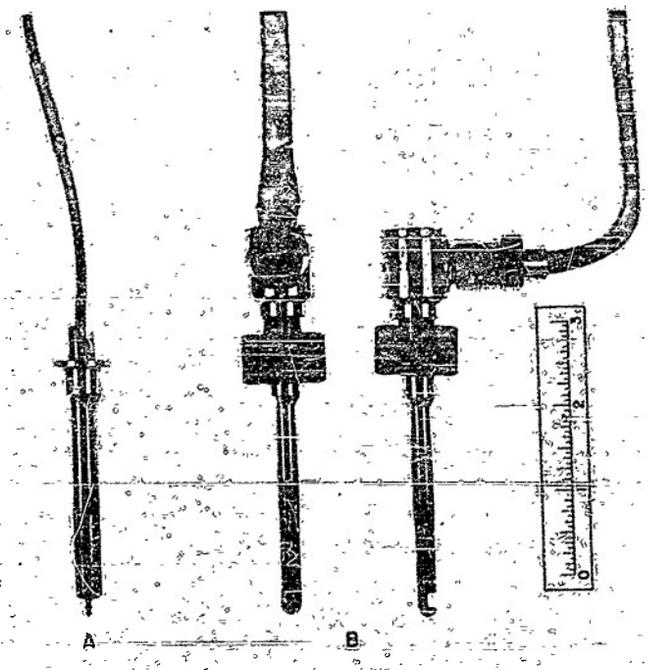

FIGURE 5. PRATT AND WHITNEY THERMOCOUPLES, A, PW-1; B, PW-2

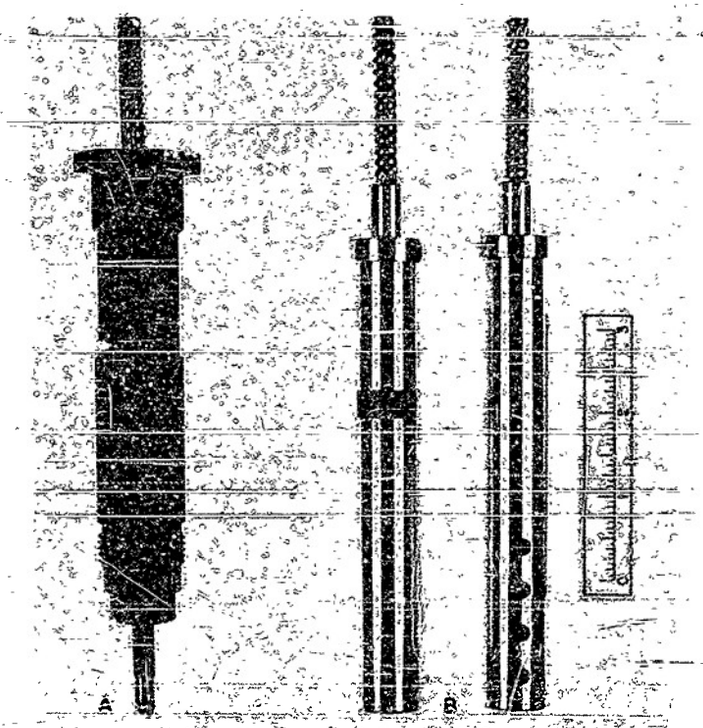

FIGURE 6. PRATT AND WHITNEY THERMOCOUPLES, A, PW-3; B, PW-4

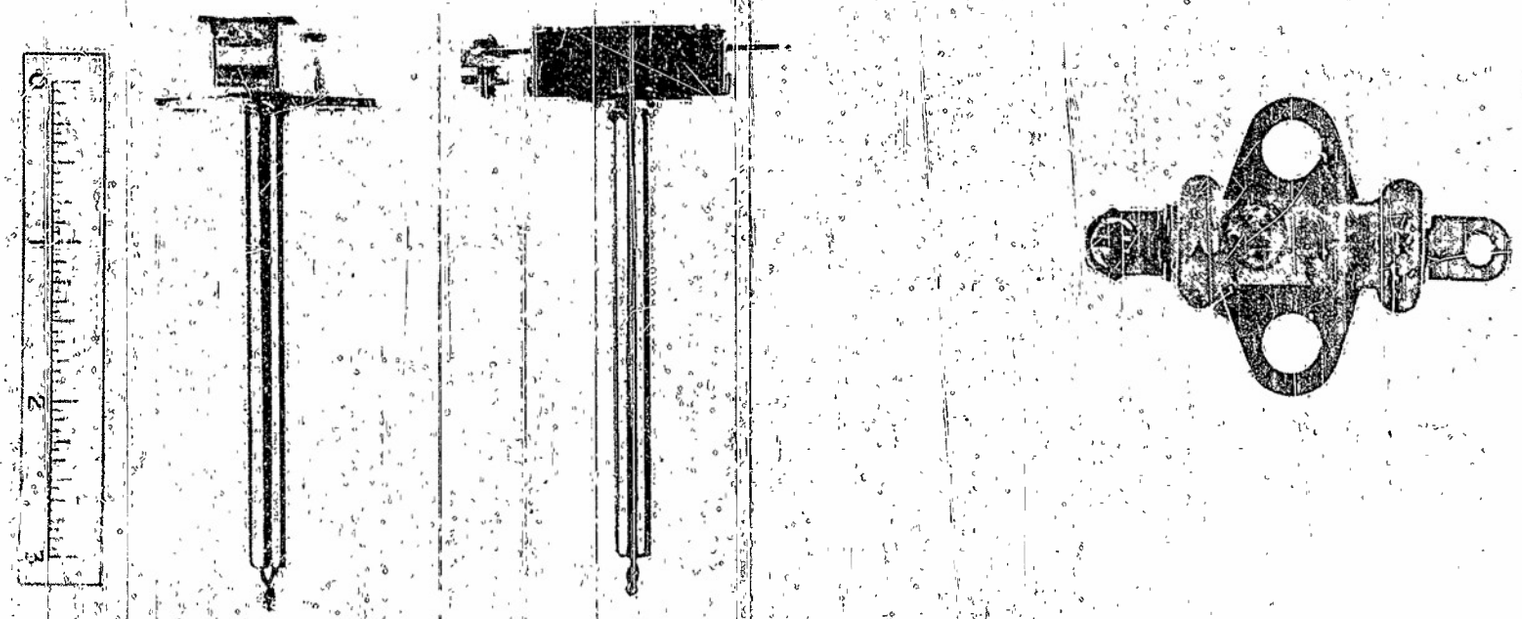

FIGURE 7. WESTINGHOUSE THERMOCOUPLE W—1

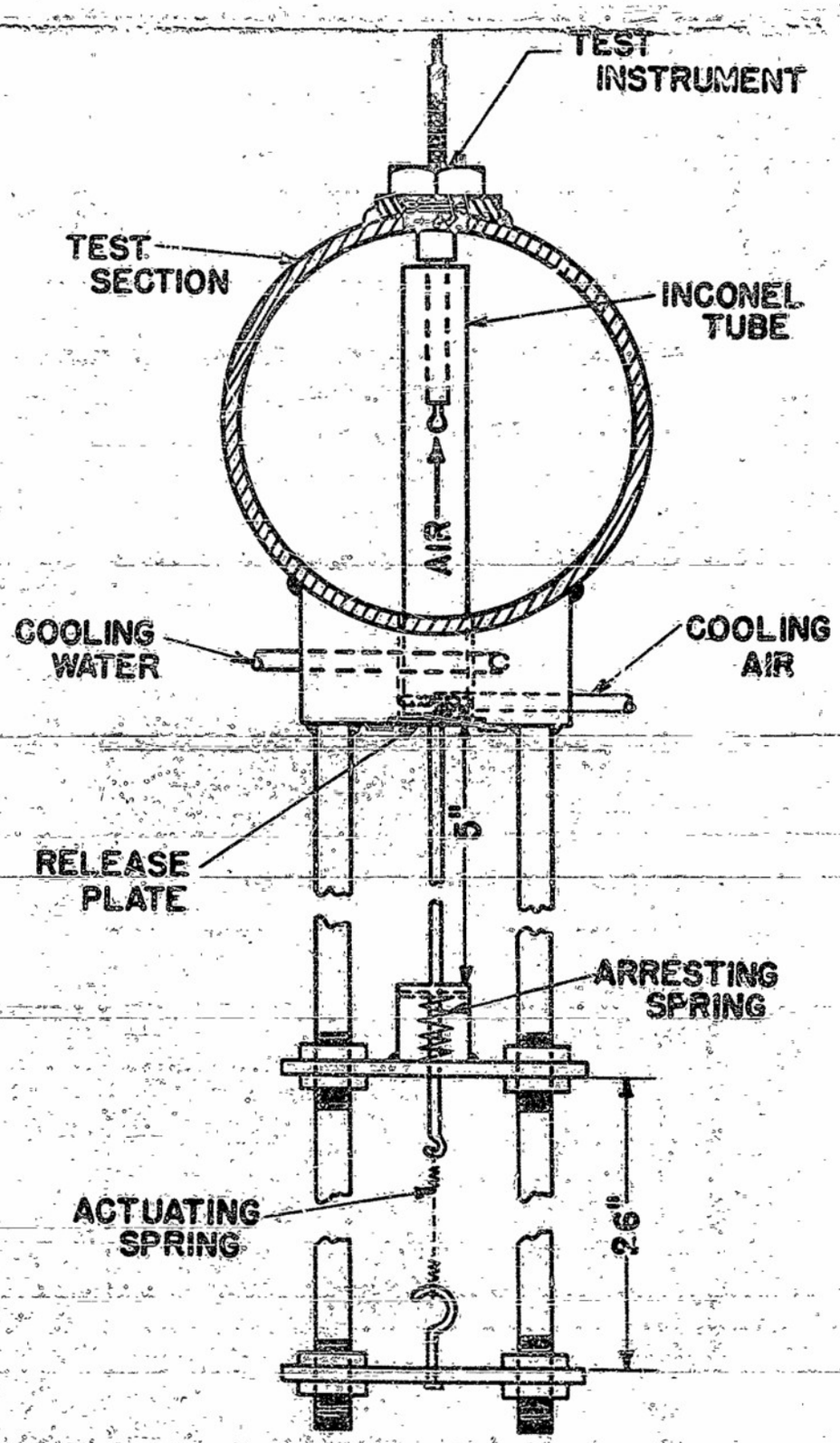

FIGURE 8. APPARATUS FOR SUBJECTING THERMOCOUPLE JUNCTIONS TO SUDDEN CHANGES IN GAS TEMPERATURE

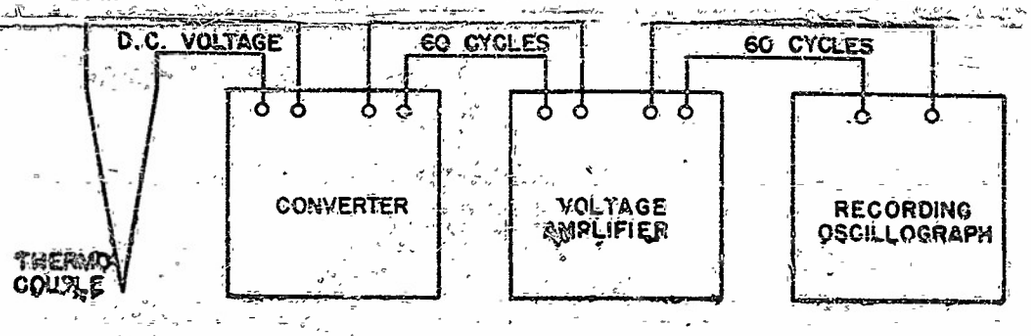

CONVERTER—TYPE USED IN BROWN ELECTRONIK POTENTIOMETER
AMPLIFIER— BRUSH MODEL BL-905
OSCILLOGRAPH— BRUSH MODEL 202

FIGURE 9. SCHEMATIC DIAGRAM OF METERING SYSTEM

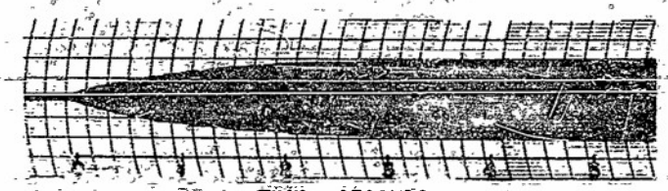

TIME—SECONDS

A. OSCILLOGRAPH RECORD

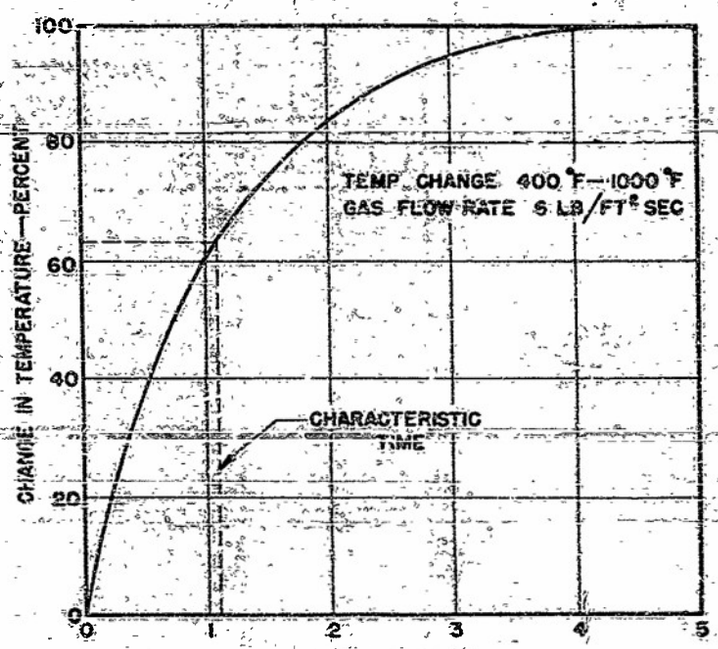

B. RESPONSE CURVE

FIGURE 10.

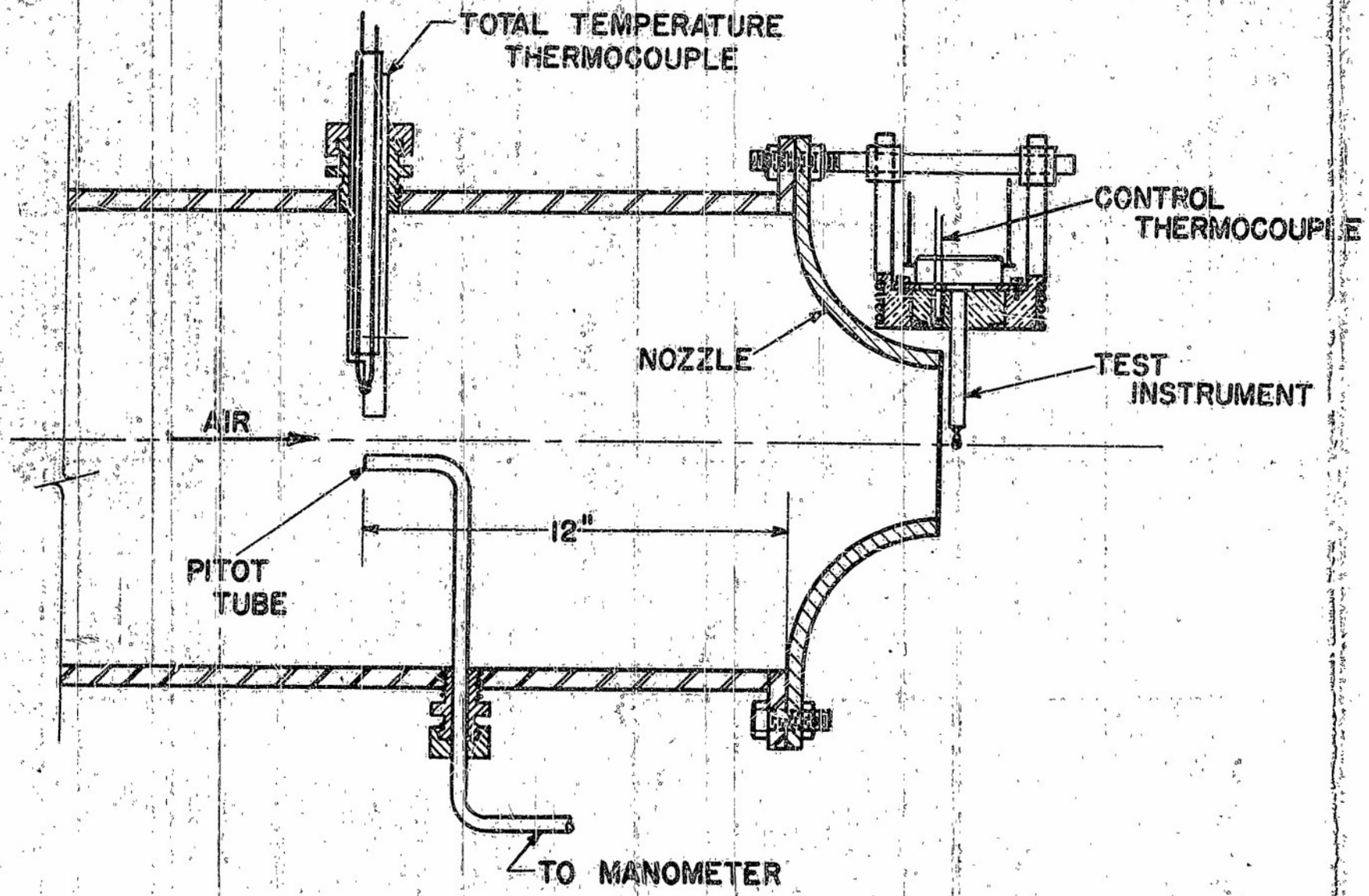

FIGURE 11. APPARATUS FOR DETERMINING RECOVERY FACTOR

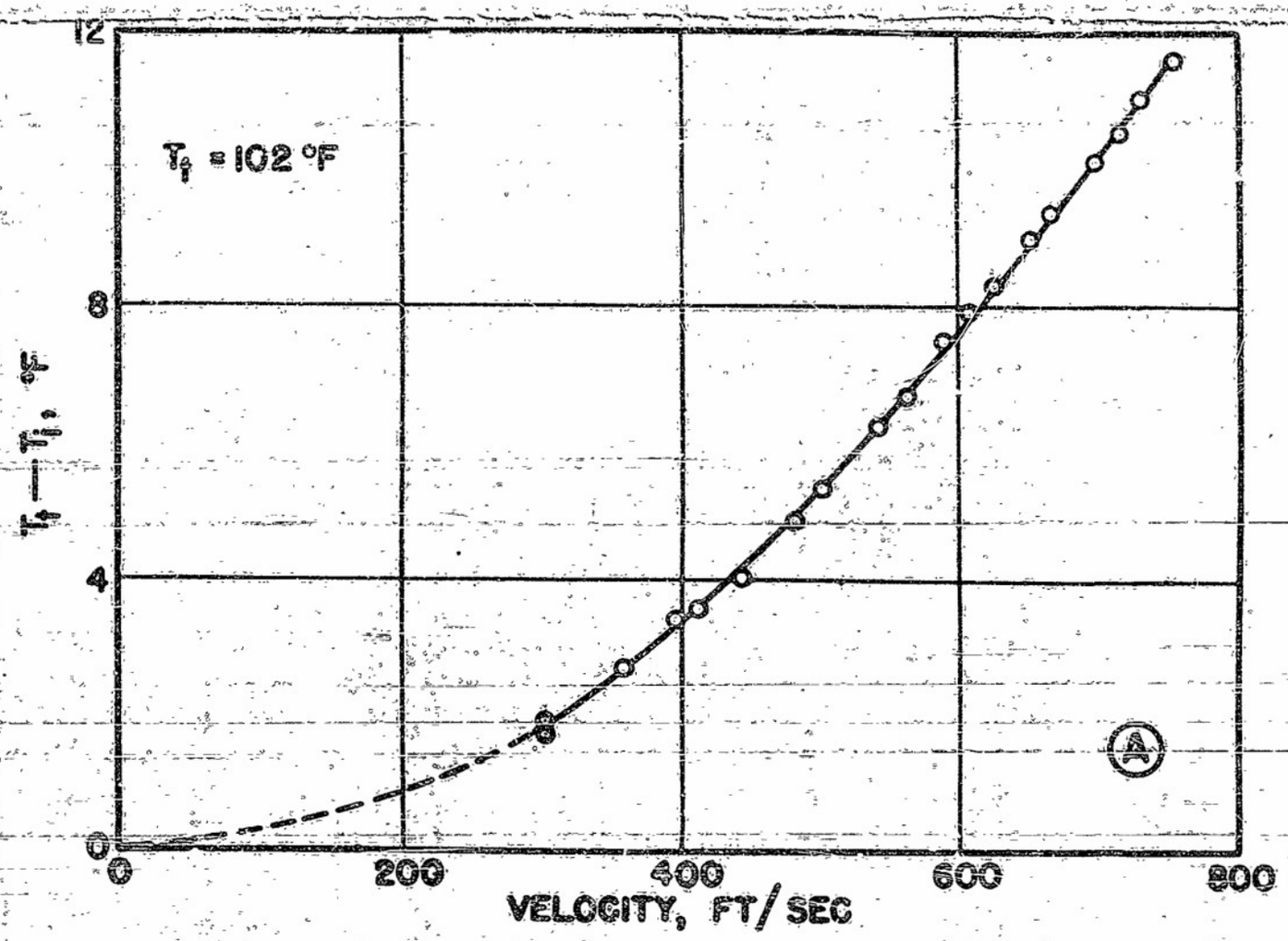

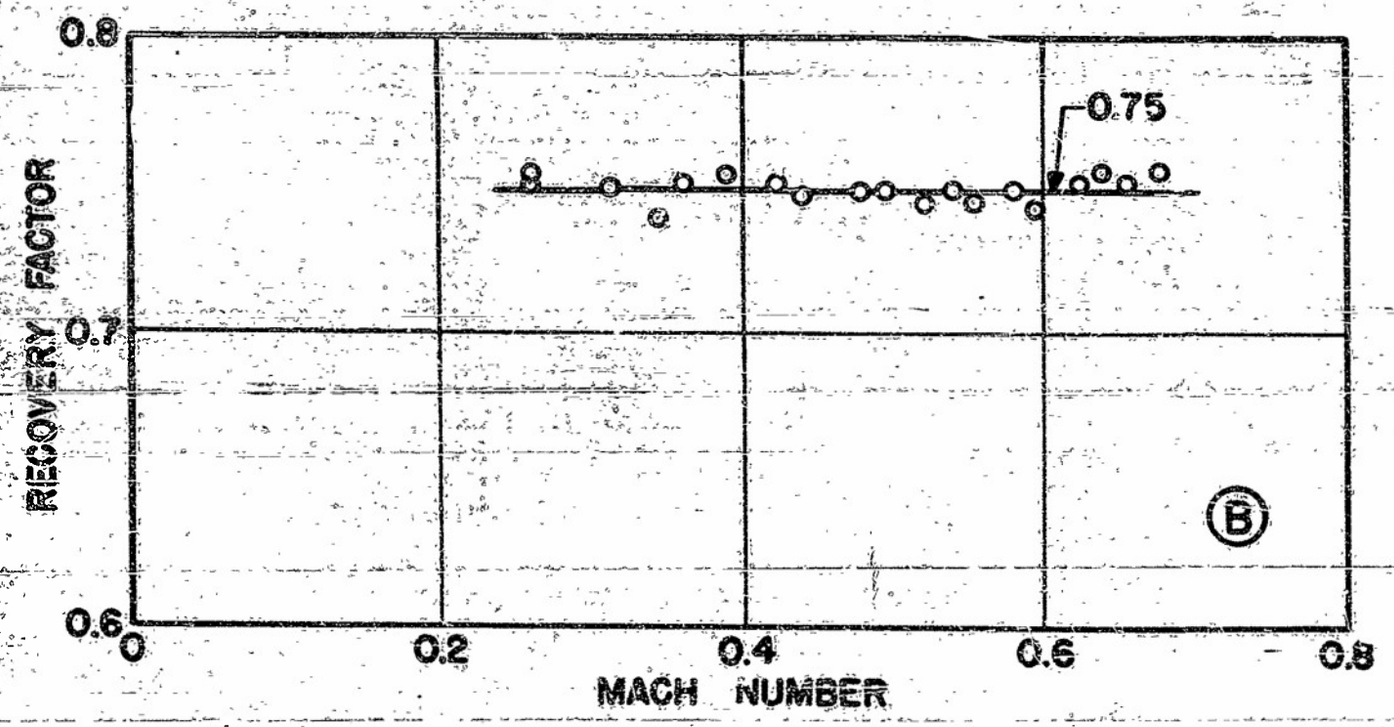

FIGURE 12. RECOVERY FACTOR TEST DATA

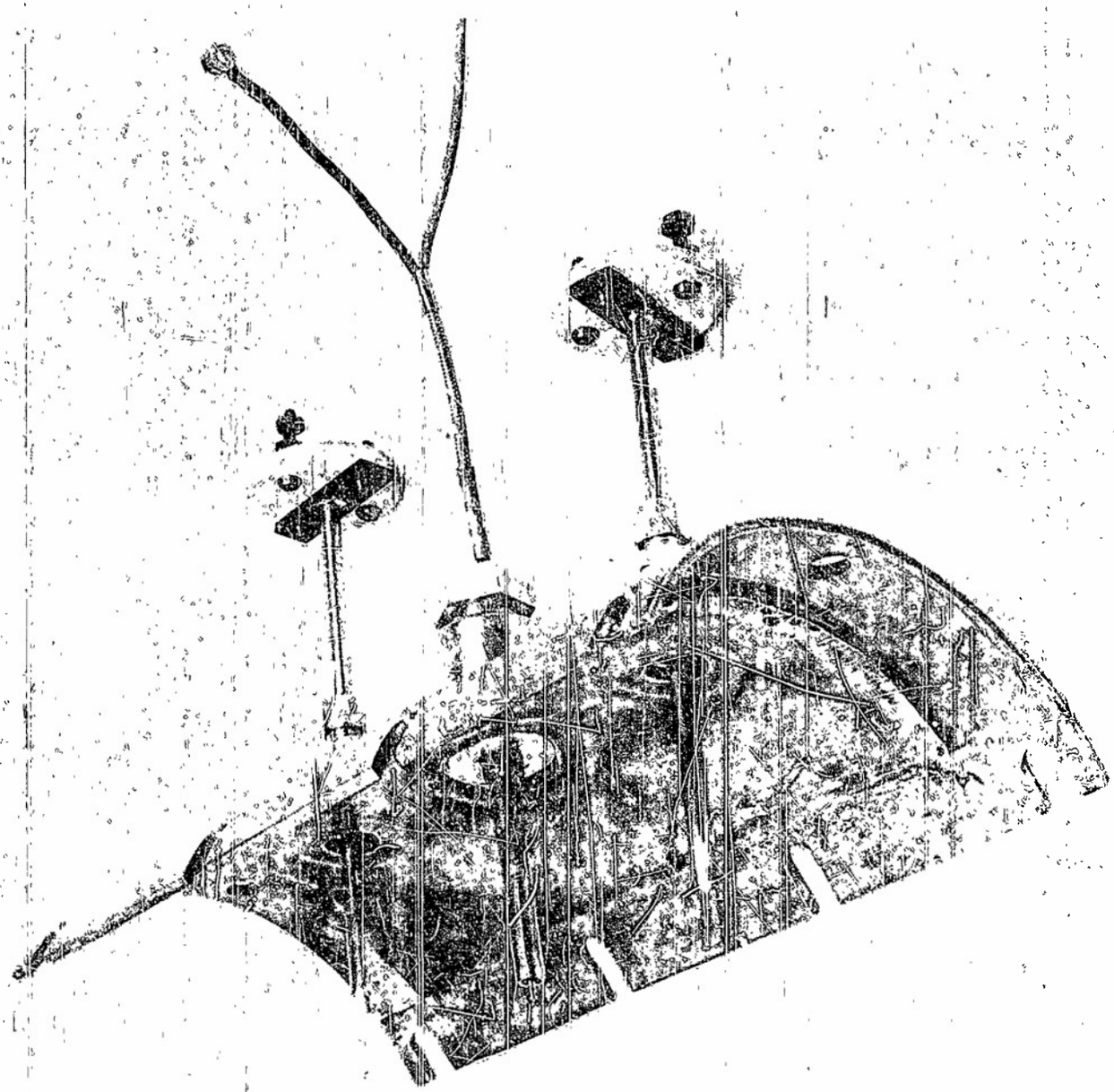

FIGURE 13 STANDARD AND TEST THERMOCOUPLES MOUNTED ON COVER PLATE

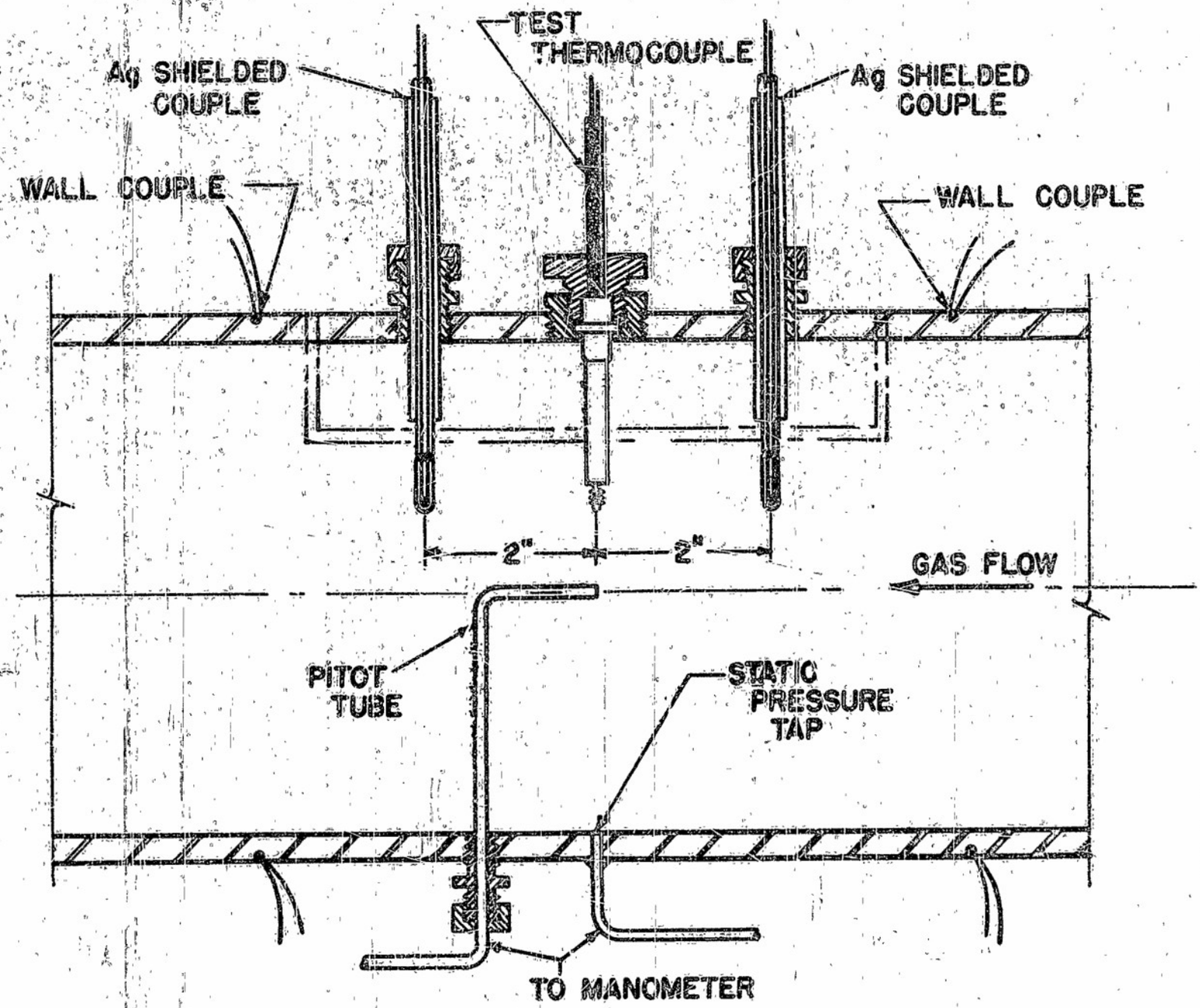

FIGURE 14. ASSEMBLY FOR CALIBRATION TESTS