Reproduced by

AIR DOCUMENTS DIVISION

TECHNICAL INTELLIGENCE

AMC

HEADQUARTERS AIR MATERIEL COMMAND

WRIGHT FIELD, DAYTON, OHIO

The U.S. GOVERNMENT

IS ABSOLVED

FROM ANY LITIGATION WHICH MAY ENSUE FROM THE CONTRACTORS INFRINGING ON THE FOREIGN PATENT RIGHTS WHICH MAY BE INVOLVED.

WRIGHT FIELD, DAYTON, OHIO

REEL – C
1179
A.T.I.
29468

UNCLASSIFIED

29468

The Aero-Resonator Power Plant of the V-1 Flying Bomb

(None)

Diedrich, Guenther
Princeton University, Project Squid, Princeton, N. J.
(Same)

TM-PR-4

(Same)

June '48 Unclass. U.S. Eng. 72 diagrs

A detailed study is presented of the development of the pulsejet engine which served as the power plant for the German V-1 flying bomb. The history and development of the pulsejet from its crudest designs and the test stands developed for this type engine are considered. The dissertation on resonator valves covers inlet valves, flow valves, and controlled valves. The general basic requirements, origins of resonator shapes, and special resonator tube shapes are discussed as well as the basic requirements and basic types of mixture formation, mixture formation equipment for vaporous and gaseous fuels and powder fuels, and special arrangements of the spoiler nozzle mixture formation process. The principles of automatic mixture regulation and gas mixture arrangements are reviewed.

Copies of this report obtainable from Air Documents Division; Attn: MCIDXD

Guided Missiles (1)
Propulsion (3)

Missiles, Guided - Propulsion (63450);
Engines, Pulse jet - Development (33988.2); V-1 (95970)

AIR DOCUMENTS DIVISION, T-2
AMC, WRIGHT FIELD
MICROFILM No.
RC-1179 F29468

ATI No. 29468

UNITED STATES NAVY

PROJECT SQUID

TECHNICAL MEMORANDUM No. Pr.—4

The Aero-Resonator Power Plant of the V-1 Flying Bomb

by
Ing. Guenther Diedrich

translated by
A. Kahane

30 JUNE 1948

PRINCETON UNIVERSITY

The Aero-Resonator Power Plant of the V-1 Flying Bomb

by
Ing. Guenther Diedrich

translated by
A. Kahane

PROJECT SQUID
PRINCETON, NEW JERSEY
1948

This translation was made as part of Project SQUID, a program of fundamental research on liquid rocket and pulse jet propulsion for the Bureau of Aeronautics and the Office of Naval Research of the Navy Department.

Contents

Preface v

Chapter I. The History and Development of the Aero-resonator 1

Chapter II. Aero-resonator Test Stands 14

Chapter III. Resonator Valves 27

- Inlet Valves 27
- Flow Valves 39
- Controlled Valves 40
- Summary 42

Chapter IV. Resonator Tube Shapes 44

- General Basic Requirements 44
- Origins of Resonator Shapes 44
- Special Resonator Tube Shapes 47
- Summary 52

Chapter V. Mixture Formation 53

- Basic Requirements and Basic Types 53
- Steady Mixture Formation 59
- Mixture Formation Equipment for Vaporous and Gaseous Fuels 62
- Evaporator Devices 62
- Gas Mixture Arrangements 64
- Mixture Formation Equipment for Powder Fuels 64
- Special Elements of the Spoiler Nozzle Mixture Formation Process 65
- The Fuel Supply Transmission 67
- Starting Arrangements of the Spoiler Nozzle Mixture Formation Process 68
- Principle of Automatic Mixture Regulation 70
- Summary 71

PREFACE

This report of the development of the aero-resonator of the V-1 flying bomb was written in Germany by Dr. Ing. Guenther Diedrich shortly before the end of the recent war. The text mentions dates as late as April 1945, and this report should therefore be useful in giving American scientists a bird's-eye view of the German work in this field. Dr. Diedrich was personally responsible for much of the work that was done, and this report may be regarded as authoritative.

This translation was made at Princeton University, following the suggestion of Professor Courant of New York University. Princeton is the administrative center of Project SQUID, a Navy project in pulse-jet research in which five universities cooperate. This translation constitutes part of Princeton's administrative work, and is separate from Princeton's research activities.

It is hoped that this report will serve as a starting point for future research and will be suggestive of unexplored ideas. It may also prevent the duplication of already-performed German work by American Scientists, and thus help to avoid blind alleys.

Dr. Diedrich's report has been freely translated, but like nearly all translations this bears some traces of the original language. Every effort has been made to make the technical exposition clear, however. The original report was in three sections, which have here been broken into five chapters, for the convenience of the reader. The illustrations were taken directly from the original report.

CHAPTER I

THE HISTORY AND DEVELOPMENT OF THE AERO-RESONATOR

Although intermittent flow jet-propulsion aircraft engines have but recently appeared on the scene, their history in both the technical and patent literature goes back several decades. In many of the early designs the frequency of operation was dependent on the timing of the mixture and ignition arrangement. These engines did not necessarily operate at the natural frequency of the system, and are therefore classed as non-resonator engines.

The resonator-explosion-engine is of more recent development. P. Schmidt in Munich and the group at the Argus Aircraft Engine Factory in Berlin have made many contributions, and many workers are continuing their studies.

(A) Historical Summary and Type Classifications

Non-Resonating Types

The non-resonator-jet-engine has not yet been used successfully in aircraft flight. Some few designs of 1910, 1930, and 1940 are described here only to illustrate the abundance of ideas in this branch.

(a) Plants depending on piston engine design. Figure 1 shows the design proposal of Lorin, which was described in 1908. This scheme depended on Otto-engine construction, the exhaust gases passing through a regulated rotary valve and then out through a thrust

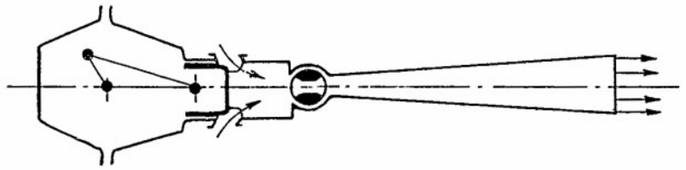

Fig. 1 Lorin (France) 1908
a) Piston engine - Nonresonator Jet Engine

nozzle. The high energy mixture brought about by the ignition stroke is discharged immediately as a power jet, while only the power of compression and the friction losses of its own component parts had to be supplied by the driving shaft. In a different form this development path became useful through the well known exhaust gas jet-tube.

(b). Engines depending on the turbine-combustion chamber designs. Many proposals can be described in which the explosion-chamber is separated from the charging arrangement. There are many examples of special charging arrangements whose drive mechanism and layout arrangement result in difficulties, and which are abandoned in favor of ramming air intake. Beginning in 1908 with the fundamental type of explosion chamber, the Holzwarth (Figure 2), the development of the standard type of the turbine-explosion chamber can be followed.

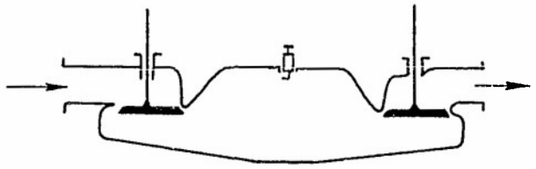

Fig. 2 Holzwarth - Explosion Chamber 1908
b) Turbine - Combustion Chamber - Nonresonator Jet Engine

Both the engine combustion chamber and the turbine combustion chamber were originally developed about 1910. These were non-resonator types. To regulate the gas exchange process of these devices, many machine elements such as flap valves, slides, etc. were required. An example of a design with flaps, or conical valves, is the power plant invented by Goddard (USA, 1931, Figure 3), while Stipa (Figure 4) suggested an interesting

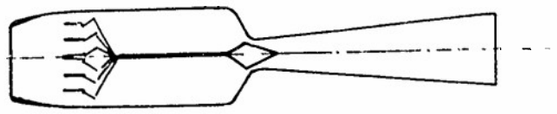

Fig. 3 Goddard USA 1931

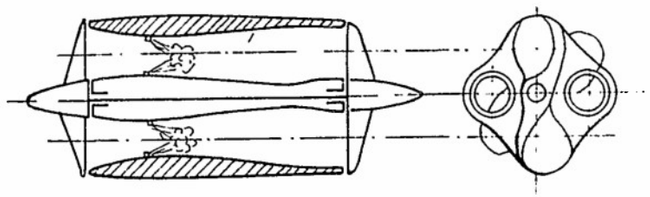

Fig. 4 Stipa Italian 1940

multiple-chamber regulated slide valve design. The original machine of Fairey (England) of about 1940 (Figure 5) had no exit valve. The exhaust gases exit uncontrolled through a tubular exhaust pipe, thereby getting around the regulation difficulty of discharging the

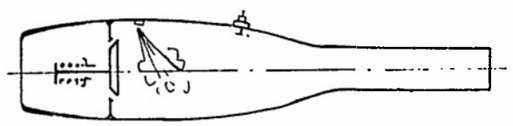

Fig. 5 Fairey England 1942

Fig. 3-5 Non - Resonator - Types

ignited working fluid. The mechanism consisted only of an automatically opening intake valve, whose stroke regulated injection and ignition.

The non-resonator plants mentioned above are able to produce resonant explosions if the opening frequency of the intake valves is tuned to the natural frequency of the engine. But the solution of the difficult valve design problem need not trouble the inventor, since the resonant frequency may be determined from a pressure diagram obtained with the engine. In 1940 the present author successfully ran a non-resonator engine, having wide adjustable limits of operating frequency (Figure 18.)

Resonator Types

As early as 1910 pure resonator-jet plants were suggested and were run, but it would be difficult to trace these back to the fundamental conbustion chamber design of the Otto engine or explosion turbine as shown in Figures 1 and 2. Their technical pedigree lies much closer to that of acoustic machines, which already could produce enormous sound intensities– for example, over 120 phon with frequencies of about 50 cycles per second.

The engine length determines the explosion frequency in resonant operation, and this must suit the valve and the mixture formation timing. The reaction force of the resonant oscillation superimposed on the transport flow causes the thrust of this plant.

As Marconnet wrote in his patents of about 1909, explosion resonator operation could be achieved in an engine (Figure 6) without intake and exhaust valves simply by fixing

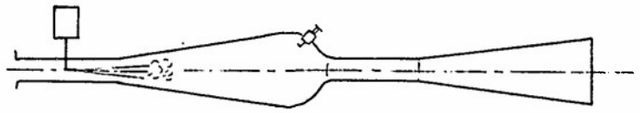

Fig. 6

the tube cross-sections. He had thought of an engine working on this principle in connection with the powering of air-craft; he also had many other ideas which later became reality.

The engine illustrated in Figure 6 had nearly the simplicity of the steady operating Lorin ram jet engine, which became known about 1913, and whose simplicity it is not possible to surpass. Moreover it possessed the two advantages of higher mean pressures and operation at zero speed, but it also had the disadvantage of intense noise and vibration associated with the periodic burning.

The engine of Marconnet (Figure 7) had an automatic intake-valve and a carburetor-like mixing chamber placed in front of this intake-valve. In Figure 8 is shown a further

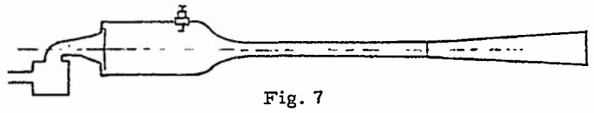

Fig. 7

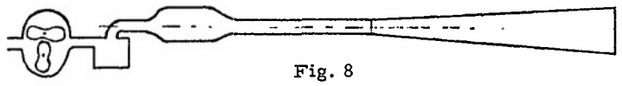

Fig. 8

Fig. 6-8 Marconnet (France) 1909

possibility, with a compressor arrangement (Roots-blower). The descriptions in the patent literature reveal that Marconnet perceived the automatic manner of operation, the automatic intake charging and ignition, and also that he had already proposed some improved arrangements, e.g. charging through a blower and the use of a conical exhaust tube, which improved the air intake in stationary operation.

It is remarkable that during 1910 Caravodine had utilized such resonating-explosions to operate a gas turbine for a duration lasting several hours. A small experimental turbine of the Caravodine design is shown in Figure 9. It was water cooled and was

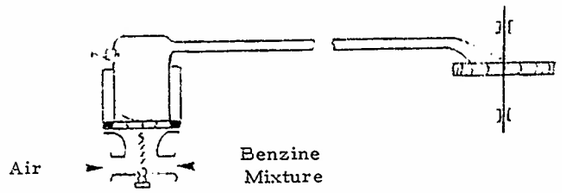

Fig. 9

Caravodine 1910

equipped with a combustion chamber with a spring loaded plate valve. The pressure diagram of this arrangement has somewhat the same form of that taken from an Argus resonator. Also the explosion frequency in the tube corresponded to a range of 38 to 45 cycles per second. The turbine delivered 1.6 horsepower of useful work with a specific fuel consumption corresponding to an overall efficiency of about 2.5 per cent.

In 1913 a unit was put into operation by Zselyi which followed the principle of the Segnerian waterwheel and was a multichambered resonator turbine (Figure 10). The gas supply passed through a hollow shaft. The air was taken in through automatic spring loaded poppet valves. A distributor disk was provided, so that the mixture was supplied intermittently to each chamber.

This model is mentioned because it led to the development of a resonator reaction propeller. The present author, while with the Argus firm in 1940, had running a two-bladed reaction propeller, but further development was abandoned because of the knowledge of the difficulties of rotation at the outer periphery of glowing combustion chambers.

After the first engines of the resonator-combustion type, there did not follow any continuous line of development until P. Schmidt of Munich started his work in about 1930, or until the proposal at the same time of Rheinst of Holland.

The engine of Rheinst could also be classified as an explosion resonator. The jug-shaped engine operated with self-ignition. Intake air and exhaust gases passed through the same opening. The Rheinst plant was brought to the machine laboratory of the Technical High School of Dresden to function as a steam generator.

Its working principle can be illustrated with a screw top glass jar whose cover is provided with a hole as large as a nickle, then filled to a height of half an inch with ether as a light volatile fuel. Easy shaking produces an ignitable ether-air mixture, which explodes when exposed to a match flame. It rapidly exhausts, and then fresh air rushes in to fill the partial vacuum. This fresh air mixes once again with the remaining ether vapor in the jug to form an ignitable mixture that renews the explosion (Figure 12). This process repeats periodically, the working frequency corresponding to about the natural oscillation frequency of the bottle.

The patent which the inventor took out on the Rheinst resonator concerns itself with the self-ignition process and detonative ignition.

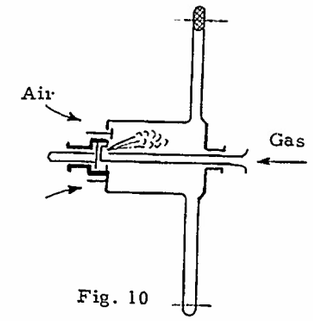

Fig. 10

Zselyi 1913

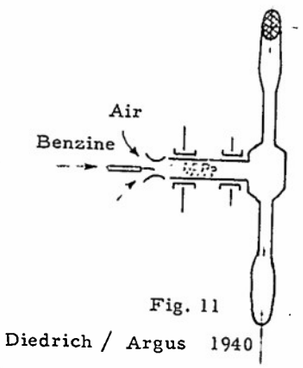

Fig. 11

Diedrich / Argus 1940

Fig. 9 11 Resonator - Turbines

P Schmidt of Munich in a round about way evolved the typical tube-shaped construction of the resonator-jet tube as a result of his idea of periodic air displacement. He started with the assumption that with a normal ejector an energy exchange with losses occurs on account of the mixing process, and therefore no impulse increase through the mixing nozzles results. But Schmidt observed the static explosion pressure of a stationary amount of gas without compressing it with a piston and noticed that it was an almost loss free exchange and that a large impulse increase resulted.

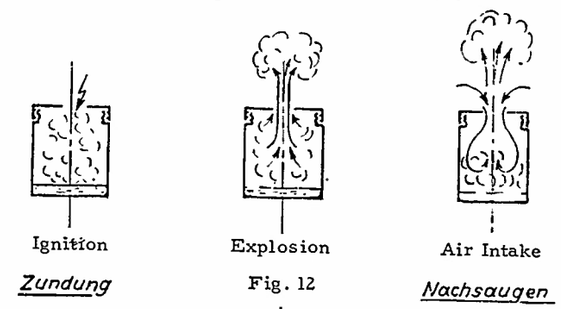

Fig. 12

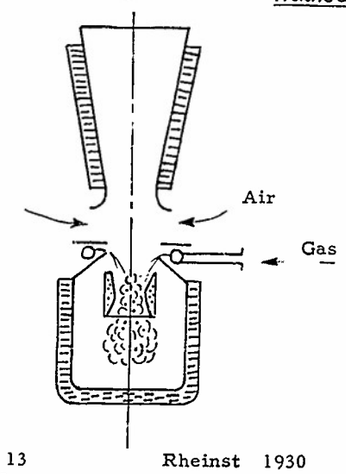

Fig. 13 Rheinst 1930

Resonator - Evaporator

The fundamental methods of augmentation are shown in Figure 14. The best efficiency

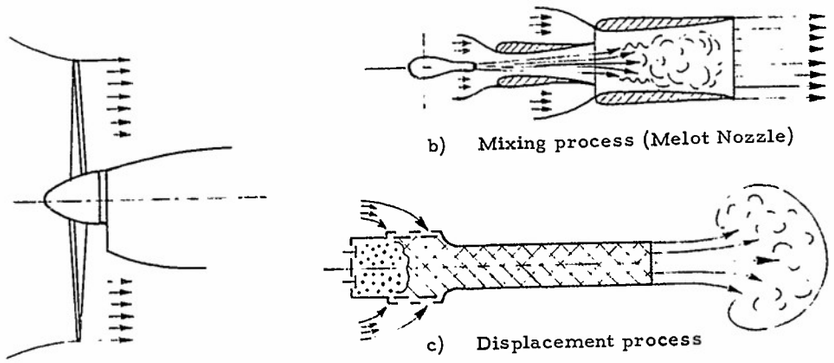

Fig. 14 Energy-Exchange Processes

for these types is allowed by the propeller, while the mixing method of Melot has the largest losses. The displacement operation of Schmidt's air augmentation process is the only one in the group embodying periodic explosion operation. Therefore Schmidt had to have first, above all, a machine that produced periodic explosions at a high frequency. He believed it possible to obtain a quick thorough ignition in which a plane separating layer is ignited by small quantities of mixture, after which the process of air mass displacement occurs.

Ignition. For this object Schmidt first developed a small ignition-jet-oscillating piston device, discovering later that his tube connected to the ignition-jet-oscillating-piston device operated reliably and with a fast thorough self-ignition.

Figure 15 shows the Schmidt ignition-piston-augmentation design of about 1938 in its three working phases; ignition-exhaust-intake. The ignition-piston operates so that a

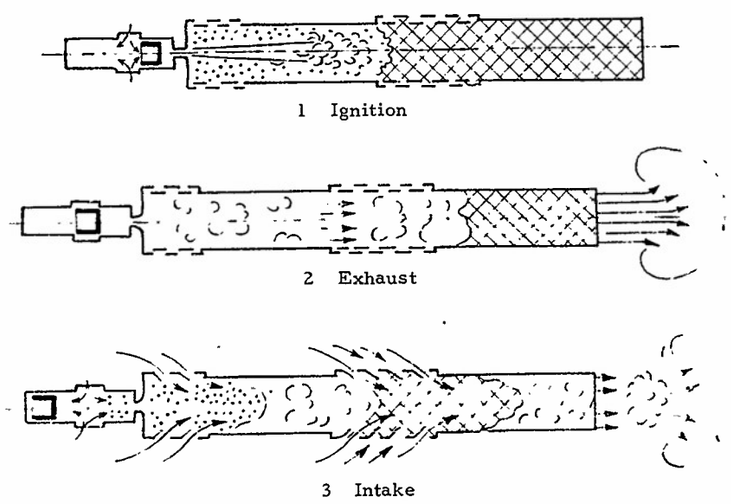

③ Fig. 15 P. Schmidt 1938

Air - Augmentation tube with ignition jet arrangement

flaming jet is discharged periodically into the explosion chamber of the jet tube which is filled with a fresh mixture, and this brings about speedy thorough ignition. It appears that the self-ignition effect of Caravodine (1910) was rediscovered by Schmidt twenty years later. The explanation of automatic ignition phenomena as detonative ignition, as given by Schmidt and also by Rheinst in their patents, needed merely to be proven correct.

Schmidt obtained very strong support from the German government for the work of developing the three resonator types shown in Figure 16.

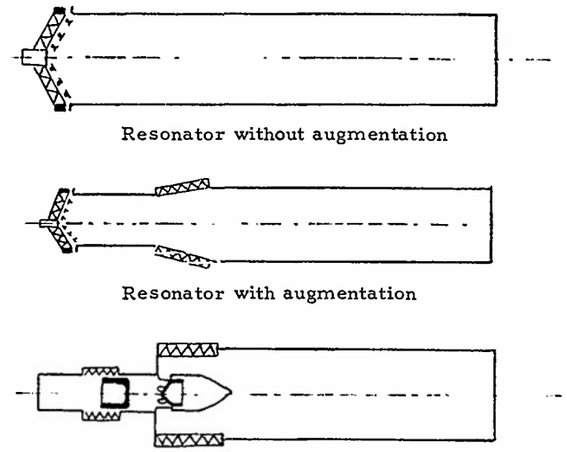

Fig. 16 P. Schmidt, Resonator types

Type A: Simply the exhausting of a burnt mixture, operating without special augmentation.

Type B: With augmentation, i.e. with air which flowed in through special augmentation valves.

Type C: The oscillating-piston-compression device designed for highest efficiency; it was intended to exhaust a mass of gas which amounted to the various constituents brought together at ignition. The ignition jet arrangement of Type C with the high pressure explosion chamber and oscillating piston pre-compression was not built.

Valve Construction. The construction of good air valves was a positive necessity before high air augmentation efficiency could be achieved. At first Schmidt used a box-shaped construction with simple spring flaps, and he later arrived at his typical harmonica(mouth organ)design. Just as in a harmonica tuned plates are joined together with a ribbed crosspiece, so in the Schmidt valve air passageways and the flap holder are joined together to the riveted springy automatic closing flaps to make a complete valve.

In order to achieve a high mass flow, i.e. so that the open passageway area would be as close as possible to that of the tube cross-section, Schmidt developed for his "Jet Tube 500" the conical valve (Figure 16A). Because of the conical shape the air passageways were made in segments and the flap seats were made with different angles of curvature.

Mixing Process

Gaseous Fuel. During the early months of 1940 Schmidt had on the test stand a cylindrical tube with a tube diameter of 500 mm designed for 500 rg. static thrust; this tube could operate for a short time with propane or butane. The propane was distributed

homogenously through the cross-section from a central distributor container placed forward of the valves, and mixed with the air taken in through the valve. The tube could operate only for a few seconds since the butane supply was limited.

Liquid Fuel. At the beginning of the first mixture, experiments with benzine were carried out on the test stand with a small engine with an exhaust tube diameter of 120 mm. Schmidt saw that the best working conditions would be obtained with the realization of an intermittent low pressure mixture formation. He had in development a rhythmic atomizer which was arranged in the center of the tube close to the valve body. The delicate mechanism of the atomizer had a small fuel-regulating piston which combined with its cover was the size of a nickel coin. A weak spring held the atomizer closed so that no benzine could leak in. During the intake period the air flowing in caused the cover plate to be raised and the correct amount of the fuel mixture was injected to form the mixture. The injected atomizer fuel was given a strong whirl as it passed through the cover rim.

This atomizer was simplified between the years 1942-45, later the models being made without movable cover plates.

The basic knowledge was in this state in the early part of 1940, at which time the Air Force Ministery strove for cooperation between the firms of Schmidt and Argus and paved the way for mutual visits and exchange of experience. Schmidt then made a single visit to the Argus firm in February 1940.

After taking into account the knowledge of the existing developmental state of the Schmidt Explosion Resonator, it appeared to be expedient that both developments should at first proceed separately, since both partners had still not arrived at a fully developed type.

Diedrich-Argus

Resonator-Burner. The first experimental work of the author, who had been engaged in jet engine development at the airplane engine factory of Argus, began in November 1939, motivated by a suggestion from the Air Ministry. He was to develop a device on the style of the Rheinst-Jug, which was to be employed as an aid for take-off. The technique which Rheinst had previously developed was not known at that time by the Argus firm, so that it was a completely new field for us.

The author was to make jet force measurements of the exhaust gas nozzle and to experiment with mixtures. Within a month a model of an explosion-resonator operating with compressed air was built and was demonstrated. Figure 17 shows the 60-cm. engine, which was spoken of as a resonator-burner. The exhaust tube had a diameter of 2 cm., the explosion frequency was close to 200 cycles per second.

The air flow was arranged so that a small amount of air opposite to the inflow direction caused the formation of ring vortices, which caused a high flow resistance (aerodynamic choking through the Borda annular orifice and vortex flow).

Special attention was directed to the steady internal mixture-formation through high-pressure fuel-atomization, which allowed the attainment of a satisfactory resonator-engine with automatic ignition.

The first experimental tube of this type, as well as a demonstration model of a two-armed reaction turbine described above (Figure 11), occured as a result of contact with the Schmidt firm.

Ignition. The self-ignition effect had automatically started with the first operation of the resonator-burner type and was interpreted as a result of the glowing exit tube or "glow tube," or the "flaming-gas remainder."

Valve Development. Contact with Schmidt in February 1940 had shown that Schmidt had developed the flap-valve considerably farther than the Argus firm, whose first goal was the flow valve without flaps.

A design of the conical form with a simple flat valve construction proved to be very advantageous for the ensuing engine development, as only a spring-flap type was necessary and only a simple assemblage was required.

Mixture Formation Process. In 1940 the main development work was concentrated on the mixture formation. The author held fast to his idea embodied in the first burner-type of steady internal high pressure mixture formation, and in January 1941 he succeeded through the invention of the spoiler nozzle ψ in solving the mixture formation problem perfectly in an easy manner, using whirling fuel nozzles.

ψ A "Spoiler nozzle" (Düsenblende) is a nozzle designed so that a dead air region exists in an annular region past its exit (see Figure 20).

The development strides that had been made are essentially shown in Figures 17, 18, and 19.

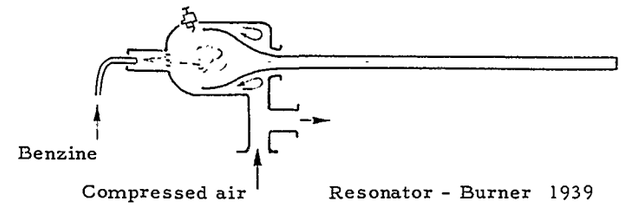

Resonator - Burner 1939

Fig. 17

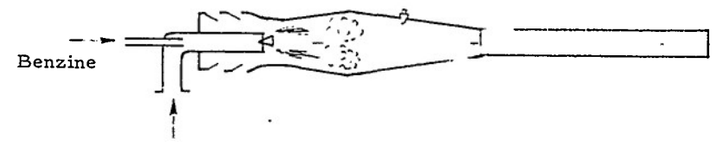

Non - Resonator 1940

Fig. 18

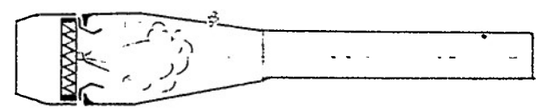

Fig. 19 AERO - Resonator 1941

Fig. 17-19 Diedrich / Argus

Development of ARGUS - Resonators

The burner-type (Figure 17) ran without a free-intake. For the air pressure atomizer type (Figure 18) 10% of the total mass flow of air was needed for atomizing and injection of the fuel, while 90% was sucked through a simple spring-plate-valve box.

This engine was of the "non-resonator tube" type. The explosion frequency was in the neighborhood of 10 cycles per second. The engine did not run with self-ignition and could operate only with spark plugs connected. The typical form of the aero-resonator (Figure 19) has not essentially changed from January 1941 to the present day. Merely a subdivision of the mixture formation chamber and the previously-mentioned spoiling has taken place.

The relationship between the aero-resonator of Figure 19 and the burner type of Figure 17 is demonstrated in Figure 20. The continuous transformation in the handling of the combustion air flow can be seen. The development went from the annular orifice reversed flow to the annular spoiler parallel flow to the spoiler nozzle parallel flow, all in combination with the steady internal high pressure fuel injector. In all cases the incoming combustion air is forced to flow alone into the combustion chamber with higher velocity past the fuel atomizer position and is intensively mixed with the fuel mist.

This correlation became known to the author, of course, only after he had made many experiments on mixture-formation and combustion-chamber shapes ("process-patent" A 93713). This simple mixture-formation process, which is decisive for the self-operation of the Argus aero-resonator, has not yet been superseded by any other method. The process also does not fail for partial-load operation. It has been determined that the thrust of the spoiler-nozzle engine may be varied smoothly through a wide range by regulation of the fuel pressure.

Annular orifice - reversed flow 1939 | Circular Spoiler - Parallel flow 1940 | Nozzle Spoiler - Parallel flow 1941

ARGUS Development of Nozzle Spoiler - Mixture formation

Fig. 20

First Road and Flight Investigations

Road Tests of the First Resonator-Reaction Automobile. Immediately after the first functioning of the spoiler-nozzle mixture-formation process (end of January, 1941) the author undertook the first road experiments with a reaction-car to compare the thrusts obtained with acceleration tests with those measured on the test stand. This first resonator-tube car, on account of its provisional construction and because of the limited working length of the test roads, could not be driven faster than about 100 km per hour (62.2mph).

The car had on board a pressure tank for the fuel, a battery-ignition vibrator for the initial starting ignition, and a pressure-regulating fuel valve (Figure 21). The car later

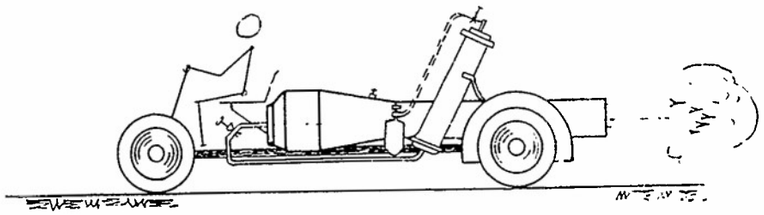

Diedrich / ARGUS

Fig. 21

First road experiment Febr. 1941

proved itself to be a very appropriate test stand and became the model for the modern data-taking automobile test stands.

First Flight Experiment. During April 1941 the first flight investigations took place with a resonator-engine of 300 mm. exhaust tube diameter. It was done at first purely to test its functioning in flight. The tube was for this purpose placed under the fuselage of a biplane in a balance, swiveled so that the airplane had enough ground clearance during takeoff (Figure 22). Thrust measurements with fast flights were carried out at a later time.

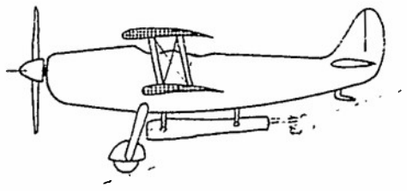

Fig. 22 ARGUS First flight test April 1941

Further flight investigations were made by the Deutschen Forschungsanstalt (German Research Laboratory) in Ainring with cargo gliders and with a jet-tube interceptor.

At the end of 1941 the Argus aero-resonator was, with regard to thrust stand advancements, completely developed to a mature type. Starting and regulation processes were also cleared up, so that special development projects could be set up when the exact employment purpose of this engine was decided. In 1942 it was decided to use the engine as the motive power for flying bombs.

Power for Flying Bombs (Argus aero-resonator). A strong impulse and a clear line of development obtained the aero resonator engine for the set object of being fast-flying expendable engine power sources of the air-torpedo "V-1" (Figure 23).

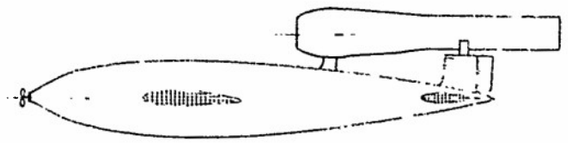

Fig. 23 Gosslau, ARGUS Flying Bomb 1942

The Gosslau factory of Argus proposed this as a path of development after considering many other employment proposals, e.g. as a take-off aid, as power for pursuit aircraft, cargo glider, as an auxiliary power plant for fast flight, etc.

Through cooperation with the firms Fieseler (parts) and Ascania (steering and regulation devices) there resulted the economical and mass produced typical form of the "V-1" missile.

In the beginning of 1943 high-velocity tests in the Braunschweig wind tunnel (Dr. Zobel) indicated a large drop of thrust at flight velocities greater than 600 km per hour (373 mph). Through refinement of the external aerodynamics and the passageway of the spoiler-nozzle cross-sections for the high-velocity conditions, the useful thrust was raised to a reasonable value so that the flying bomb was able to carry on with, however, a reduction of its flight velocity.

A great number of flight and launching experiments at the research station at Peenemunde were necessary before the bomb was put into service in 1944.

Schmidt Resonator-Engine for Flying Bombs. The resonator engine built by the Schmidt firm after 1940 proved itself both in the Braunschweig wind tunnel and on the test stand to be neither superior nor able to compete with the Argus design. Thus it is often found in history that because of the type of competition described here, the inventor is surpassed.

In the name selected by the Air Ministry the "Argus-Schmidt-Tube," both the pioneer-work of Schmidt and the forceful development of the firm Argus were duly recognized.

Research Work in the Resonator-Field

Forschungs-Institut für Kraftfahrwesen Stuttgart. Professor Kamm had at an early date decided to follow up the work of P. Schmidt. The institute became active in the jet-tube field first through their measurement group (Dr. Eisele), which made precise oscillograph measurements of the internal events of the explosion process. The first experiments of the interior relationships were made with delicate measurement methods, thus allowing the more technical comprehension of the ignition process and the motion of the flame front.

Parallel to this fundamental research there proceeded the work of development of the resonator-combustion process, which was to be employed as a heater. While the aero-resonator development moved forward uniformly and the engine for fast flight was being designed, there occurred here a development of miniature types. Exhaust tubes as small as one centimeter were proved capable of operating, and these found employment as burners, the hot working gases being used to warm up aircraft engines. The shapes for this specialized purpose approached those of Marconnet, whose pear-shaped combustion chamber was capable of self-operation. The mixture formation took place outside in a connected carburetor. The fabrication of this engine was carried out by the Karcher firm. (Figure 24)

Toward the end of 1944 the Institute was assigned to do further development of the Argus aero resonators and carried out special investigations on the effects of altitude and on dependable regulation.

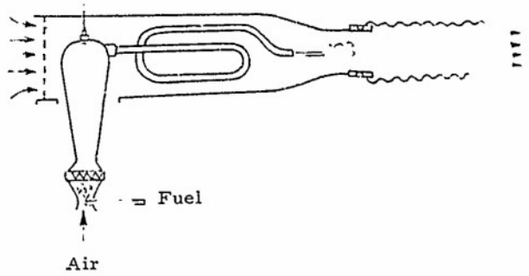

Fig. 24 Institute Kamm and Karcher Factory 1943
Hot gas blower for heater use

Investigations of two parallel heaters showed an operation with the same frequency but with an 180° shift in phase.

Forschung-Institute fur Segelflug Ainring (Prof. Georgii). When the author became Head of Research of the Air Ministry it was possible for him to give all his attention to the running of the research work of the explosion-resonator field. The goal was to do research on problems that had not yet been treated, clearing them up, and to initiate close cooperation with the separate firms and the proving station Peenemunde.

The Research Institute Ainring was assigned to take care of special explosion resonator fundamental research, and also to carry out corresponding flight experiments. In order to carry out the necessary measurements program Dr. Eisele, who was in charge of the Resonator Engine Group, developed a measurement-car test stand with which he was able to take exactly reproducible test measurements.

In 1944, in Ainring, after the employment of oxygen tanks and the ignition conditions of pulverized coal had been tested briefly in the Argus aero resonator, the general question of increase of mass flow of air was investigated. The investigation dealt mainly with the design and testing of an optimum valve from the flow point of view, and the effect of this valve on the resonator useful thrust.

The fundamental feature of the optimum-valve was the indented-flaps proposed by the author. These were made stiff by the indentations. It was possible thereby to employ ridges instead of the valve-rib-crosspieces, thus simplifying the fabrication and increasing the flow passageway free cross-section.

Wankel-Versuchswerkstatt Lindau (Prof. Triebnigg). The first invented flap-valve was made in the Wankel-Versuchs-Werkstatten Lindau in the early part of 1945. Prof. Triebnigg developed an endurance testing machine for the flap valve using parts from an Otto engine. The machine was used to give a comparison of flap endurances under various loads.

Luftfahrtforschunganstalt, Braunschweig (LFA), Institute A (Dr. Zobel). For the aero-resonator wind tunnel investigation, the A_2-windtunnel of the Eifel type proved suitable, but the wind tunnel measurements did not agree with the flight measurements. Conversion of the data by stretching the resulting low measured-pressures to higher flow velocities at a corresponding higher altitude still did not make the results identical.

Chemical Possibilities of Increasing Power. Measurements of the possibility of increasing the thrust of the Argus-Aero-Resonators through the addition of nitric-oxide (GM1) gave somewhat the same results as the first Ainring measurement.

The group of Hoffmann of DFS Ainring carried out at Braunschweig internal pressure measurements along the length of the tube axis. Furthermore, measurements of air flow through the flap valves were made.

Forschungführung, Berlin and Ainring. Since 1943 the author had hoped that the idea of a combination aero-resonator and Lorin engine would be pursued further, and the first model engine was ordered from the firm P. Schmidt (Figure 25).

The project of increasing the range of the flying bomb was worked on since 1944. At the beginning of 1945, at the test station Peenemunde, the author constructed a turbo-carburetor combination for fuel boosting with automatic boost metering regulation from

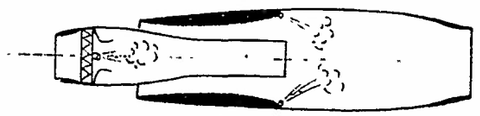

Fig. 25 Diedrich, Forschungsfuhrung 1943
Aero-Resonator + Lorin

the tube-interior pressure. The first experiments were carried out in Peenemunde in February 1945. Also in January 1945 in Peenemunde an improved flap device for the cross circulation of air was proved satisfactory. Measurement of the thrust increase of an engine with an increased airflow flap device was made in the early part of the year 1945 at Braunschweig (Figure 26).

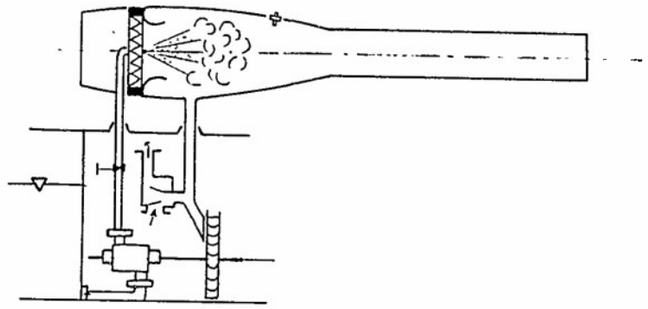

Fig. 26 Diedrich, Forschungsführung 1944/45
Turbo - fuel pump and
increased airflow flaps

CHAPTER II

AERO-RESONATOR TEST STANDS

1. Test stands for stationary experiments

The greatest number of all resonator experiments were made at rest. First there was the main question of getting the engine to run. The adjustment to flight requirements would be a second stage of development. Experimental stands and measuring arrangements were accordingly developed.

Reaction-Plate Test Stands. The author began with a table on which the first model engine (Figure 17) was fastened horizontally with a clamp (Figure 27). The fuel flowed from a gravity tank, whose height could be varied, through a tube to the centrally located

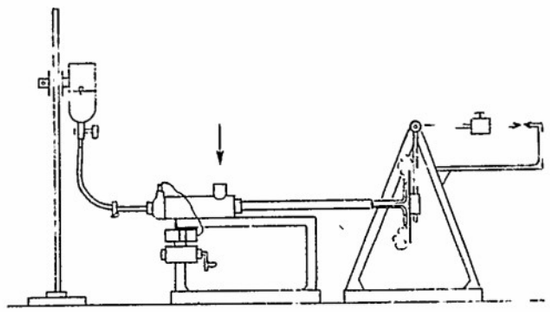

Fig. 27 1939 ARGUS Reaction plate test stand

resonator-nozzle. The correct mixture was obtained by regulation with a pinch-clamp. For a given running time the fuel consumption could be calculated from the amount used during the run.

In the combustion chamber of the resonator-model tube was placed a small spark plug, which caused the first ignition at starting. The spark was obtained from a hand cranked Bosch ignition magneto and a Summer spark coil.

The air to be burnt could be taken throttled from the compressed-air system and could be regulated with a by-pass valve, and in combination with the fuel pinch-clamp installation the ignition limits could be exactly adhered to.

The thrust could be measured with a reaction plate pendulum balance through the displacement of a counterpoise. This method of thrust measurement was developed by the author in 1938 for exhaust gas jet thrust measurement on one-cylinder engine test stands. (Dissertation, Diedrich: Theoretische und Praktische Untersuchungen an Glatten Auspuff-Strahldüsen und Zumichungs-Ejektoren, presented in 1939 at the Technischen Hochschule, Berlin).

In the reaction plate measuring process it is necessary to see that the reaction plate has the proper size with respect to the tube exit cross-section, so that no flow can pass around the plate. The reaction plate diameter must be about 4 to 10 times greater than the gas jet diameter. Placing the plate less than 4d (d=exiting jet diameter) downstream of the exit is not advisable, since an air intake also takes place at the open tube exit of the resonator-engine. With a sufficiently heavy design of the reaction plate pendulum balance, it remains very steady and precise measurements can be made.

During the first preliminary experiments the following measurements were desired: thrust and fuel consumption at each unit of time; data such as frequency, jet temperature, and jet velocity were measured later in the course of the development. For constructive planning, the information of specific thrust was of primary importance. As specific thrust, the measured thrust has meaning with respect to the exit cross-section. This value was first used to compare the worth of exhaust-gas nozzles and other jet devices of importance; it makes it possible to make immediate estimates of thrust of variations of a new type from the rear end dimensions.

DFS in the LFA, Braunschweig. The influence of a reaction-plate on the operating conditions of a V-1 aero-resonator was measured by Hoffman in the Luftfahrtforschungs Anstalt Braunschweig. The test stand used, the section (c) horizontal test stand, is

sketched in Figure 32. The test stand was built as a car test stand. Instead of wheels, rollers were employed. The car was forced by the thrust of the running tube against a spring, whose displacement was proportional to the resultant thrust force.

The reaction plate was, however, not the actual measuring element. It was rigidly connected to the base rails and could be placed at several distances from the jet exit, thus making its effect upon the running of the resonator obvious. At distances as close as four tube exit diameters, the tube ran very roughly or stopped after about 30 seconds of running time.

The reaction-plate diameter D amounted to 1250 mm. With a resonator exit diameter of 385 mm, there existed a diameter ratio of $D/d = 3.25$, which undercut the previously mentioned lower limit of 4. This car could not be used to measure the thrust effect since the reaction plate was too small to show the effect. It had the function here of being a disturbing rather than a measuring element.

The results can be summarized as showing that the reaction plate effect on the running of the resonator is very noticeable. When tubes which handle large mass flows are being investigated, it is especially recommended that the required reaction plate distance and diameter be selected, with some margin of safety.

Vertical Test Stands. Schmidt, who at the start of 1940 needed test stands for longer resonators, built predominantly vertical test stands. These had the advantage of allowing the exhaust gases to blow upwards into the open air much the same as a Bunsen chimney. The test personnel were therefor less burdened by the noise and the exhaust gases. The natural chimney draft also removed completely the gas residues of incomplete burning. As is shown in Figure 28, the thrust force is exerted on the piston of an oil pressure cylinder. The oil pressure is connected to a second smaller piston, the generated pressure force being transmitted to an oscillograph transmitter cell.

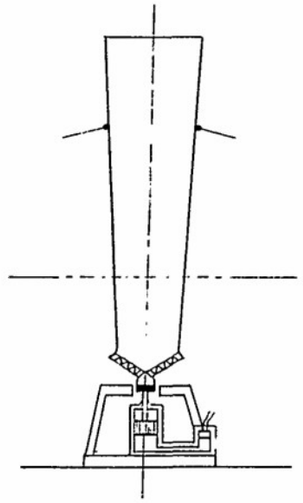

Fig. 28 1940 P. Schmidt Vertical test stand

In this way the variation of the resonator thrust with time could be determined, and the explosion frequency could be ascertained from the transmitter frequency. The mass vibrations of the engine were dampened by the oil, so that good measurement results were obtained.

Following the vertical measuring method of Schmidt, the author built a vertical test stand (Fig. 29a). The hydraulic method of transmitting the force was given up, the damping being accomplished with rubber plates. A carbon pressure cell proved satisfactory as an oscillograph transmitter cell.

The upper test stand ring was connected so that it was easily centered with an adjustment. The carbon pressure transmitter cell could be calibrated directly by hanging

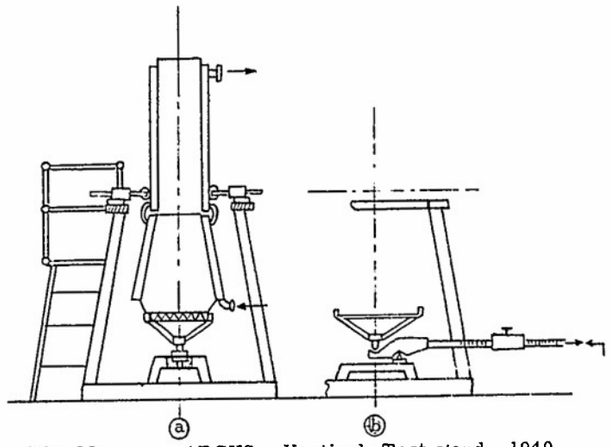

Fig. 29 ARGUS Vertical Test stand 1940

weights on the tube. The zero-reading determination and calibration required extreme care, and was therefore time-consuming. Because of the vibration and heat expansion of the tube, the zero mark always became displaced after each experiment, so that the results could be reproduced only with care.

Rapid development necessitated rapid and workable measuring procedures. On this basis a stand was built with a direct lever-arm balance. Here the action of the vibration proved advantageous, since it eliminated the friction from the knive edges (Fig. 29b).

The results with the simple lever-arm balance method encouraged the author, who in this way had utilized the common method of engine-brake-stands for the measurement of resonator thrust.

Horizontal Test Stands. The setting up and taking down of large test tubes from the vertical stands became very troublesome, and vertical tests of arrangements with entrance cowls and blowing were very difficult. This necessitated the construction of a horizontal test stand. The pendulum test stand design of Figure 30 proved to be a very serviceable solution for the developments of the following years.

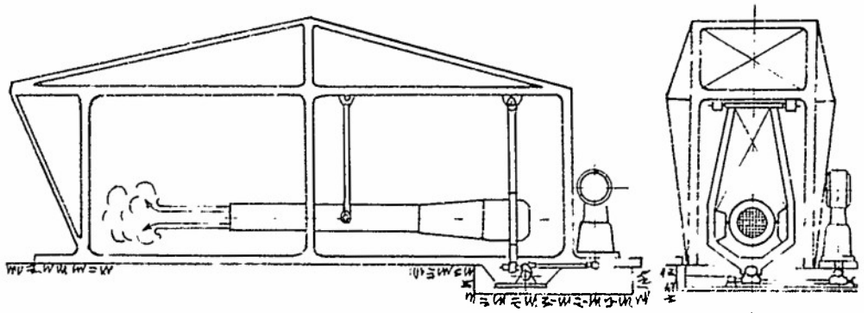

Fig. 30 ARGUS Tachocar - pendulum test stand 1941

The working point of the tacho-rod balance lay at the lowest point of the large pendulum stirrup. Here an oscillograph transmitter cell was arranged so that an oscillograph measurement could be made simultaneously with the tacho-balance reading. Rubber cushions were installed to buffer the limit deflections.

Comparison of the thrust of the same tube on the vertical and horizontal test stands did not agree. The vertical stand often gave somewhat higher thrust values. The explanation of this required investigation of the mixture formation process.

This difference of thrust characteristics in horizontal and vertical balances affected especially the Schmidt-tubes, which had been developed on the vertical stand up until the time of the wind tunnel experiments. It is easy to see that in the vertical balance the excess fuel drops, or leaking fuel remains evenly distributed over the valve cross-section. It moves only in the direction of the tube axis and is tossed downwards. By, comparison, in the horizontal balance the leaking fuel collects at the deepest point, and disturbs the homogeneity of the cross-sectional mixture distribution, therefore lessening the thrust.

The Argus over-pressure whirling-nozzle mixture formation was substantially better in this regard than the Schmidt under-pressure cover plate atomization. With the over-pressure spraying, the fuel mist of a non-operating tube in horizontal position is sprayed down the tube, while the fuel does not separate when whirl-injected in a non-operating tube. It simply flows obliquely out of the sprayer openings and settles at the deepest point of the tube, or flows out of the tube as out of a roof gutter. The Schmidt-tube therefore can be started only with an air blast.

During the research with the first resonator-car (Fig. 21) it was found that the rubber tires absorbed the vibrations. Furthermore such a flat chassis allowed an extraordinarily good arrangement for quick changing of the tubes. Therefore this first research car was initially arranged as a supplementary test stand by blocking up the front wheels. The car was for this purpose placed in two U-yokes, and by welding some holding stirrups at the front which were hooked to some spring dynamometers, exact thrust measurements could be made (Fig. 31).

The chassis-car test stand proved itself in the following years to be the best test stand. The essential test stand apparatus is also shown in Figure 31. The fuel tank was placed on a platform having sufficient height to allow the fuel to flow under

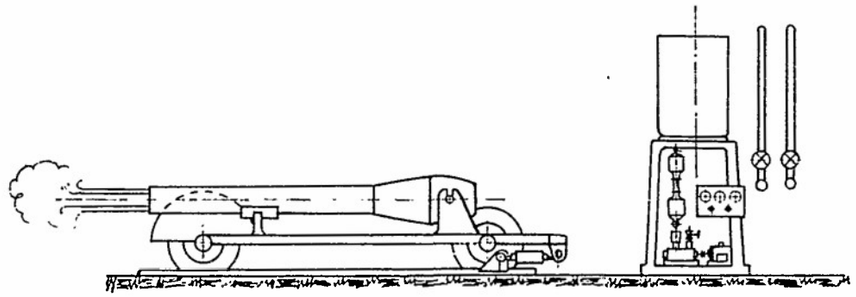

Fig. 31 ARGUS Chassis - Car test stand 1941

the platform to the pumps and filters. In front of the platform, the fuel quantity meter was placed at eye level. Volute pumps, which are used in automobile hydraulic systems, were employed; but gear pumps placed in series were also used, allowing fuel pressures up to 15 atmospheres, which was needed at first for the regulation of sprayer operation. The exact flow pressure of the pumps could be satisfactorily controlled with a flow-discharge regulator.

The mounting shelf was arranged as shown in Figure 31, fuel pressure and compressed air pressure manometers were placed besides the switch lever which turned on the spark vibrator. The storage batteries for the spark were also placed on the platform base plate.

These chassis-car test stands were later operated as several parallel stands, so as to handle the development tests of parts designed for the final series. Regulation, starting, and mounting development could be accelerated on these handy test stands.

But there was also a special field of operation for the vertical test stand; it was useful for flap endurance tests. To ascertain the influence of cooling on the static thrust, a cooling jacket was placed around the resonator tube. Calorimetric measurements of the cooling-water gave this information, as well as the heat transferred to the tube wall. This cooling-jacketed resonator tube was naturally more durable

than the mass produced aero-resonator, and could be used on a vertical test stand for the valve endurance tests without having to be replaced frequently. Since the maximum thrust of the cooled tube was greater than that of the uncooled tube, the flap life was naturally somewhat shorter.

The research with the cooling-jacketed resonator was remarkable in that one could, through regulation of the flow of cooling water, obtain any value of cooling water exit temperature desired. It was possible, even, to generate steam. This first steam generator research was made in 1941, and it led to the development of the resonator-steam-generator. But there was no time for following this direction of development.

The author, while at the AEG-Steam Turbine Factory Berlin between 1935-1937, had worked on the problem of simple steam generators and had investigated the fundamental questions of steam-operating road vehicles and aircraft. It appeared to be advantageous, therefore, after these first experiments to pursue this question further. One can reckon on obtaining with it film coefficients similar to the Velox-boiler. A summary of the work in this field, with many interesting statistics, was given in my inaugural dissertation at the Technische Hochschule Berlin entitled: G. Diedrich, "Die Aussichten einer leichten Dampfkraftanlage zum Luftschrauben-Antrieb."

In the course of further development of the Argus aero resonator as the engine for the flying bomb it appeared to be expedient to investigate as many questions on the test stand as possible, such as the effect of flight-cooling, flight ram, etc. Therefore the body of the flying bomb, with the arrangement forseen for the resonator, was hung in a blower-high test stand which was developed from the large pendulum test stand of Figure 30. The fuselage, with the aero-resonator placed astride of it, was placed in a special roofed-in test room. A special sound-proof observation and instrument room was provided.

A further development of the pendulum-supported test stand design was carried out in Ainring (Fig. 32). Blowing was also carried out with an axial-flow blower driven by a benzine engine. Measurements of pressures were obtained with quartz

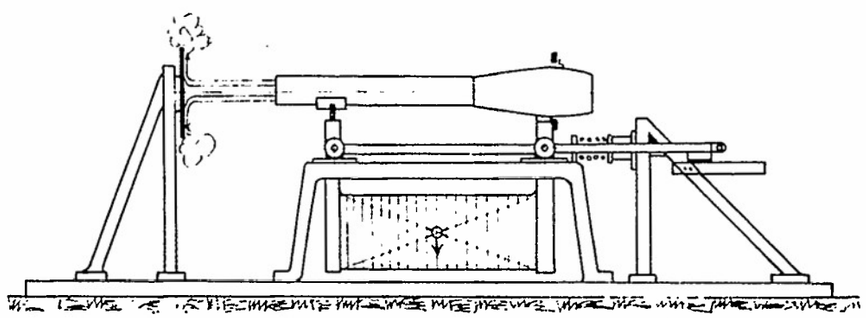

Fig. 32 DFS. (LFA Braunschweig) Roller supported car test stand with ballast weight 1944

pressure cells. Zero-position readings and calibration were obtained with displacement by weights. As with the first oscillograph measurements of the Argus firm, it was necessary to overcome various measurement difficulties caused by the undamped vibration of the resonator so that reproducible static thrust curves could be obtained.

Dr. Eisele, who had developed the Ainring test stand, also improved the chassis-car test stand construction. The transmission of the force from the chassis to the spring dynamometer was accomplished by the installation of a long elastic damping member like a multiple-rubber cord. The indicator of the spring dynamometer remained very still, giving a very exact reading of the thrust. The chassis-car was not placed in the U-yokes, but on a horizontal flat concrete slab.

The resonator measuring technique was further refined by exact measurements of the fuel flow pressure. The pressure was measured at the flow pump as well as close to the nozzles, in order to determine the pressure drop in the flow line. It was found that a pulsation which caused an error in measurement existed in the fuel line. Through the installation of a special damping valve it was possible to achieve steady and reproducible mass and pressure measurement results.

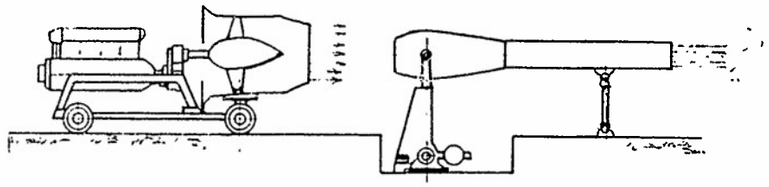

Fig. 33 DFS. Ainring Pendulum supported - test stand with blower 1943

The measurements of the mass of consumed fuel were accomplished with an oval-wheel counter and were checked with a Seppeler-vessel and stop watch.

The test stand at Ainring was used for the endurance testing of water-cooled tubes. For this purpose a special fountain with tanks was built. It was intended that the endurance runs be carried out in horizontal position.

Peenemunde Test Station. At the Peenemunde test station there was no actual test stand which allowed static thrust measurements. To carry out the tests of the functioning of the structural parts the body of a flying bomb was simply hung in an elastic frame. In order to cool the tube without blowing, a sprinkler cage (Fig. 34) was placed around the tube, a number of fine twisted nozzles distributed a thin haze

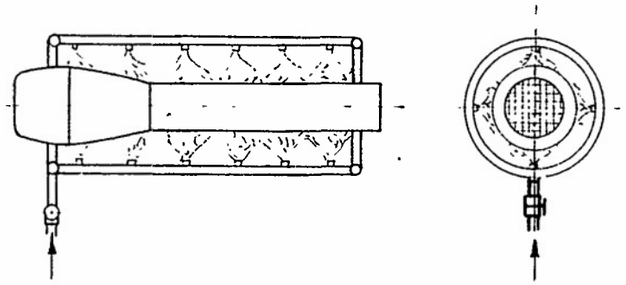

Fig. 34 Proving station Peenemunde Spray cage 1944

of water homogeneously over the entire tube surface, and steam was immediately generated. The steam was ejected with the exiting gas jet.

Test Stands at Other Institutes. The Forschung Institut fur Kraft-fahrwesen Stuttgart was at the point of starting research on aero-resonators at the end of 1944 and proceeded to build a new test stand based on the experience of the Ainring group. The measurements carried out at the Stuttgart Institute were predominantly functional measurements on resonator-heaters. For this purpose special test stand arrangements were not necessary, since only flow pressures, air intake mass flows, and temperature measurements were important. For the resonator-heater development the test stand requirements were essentially the plate stand shown in Figure 27.

The Stuttgart Institute was assigned the problem of the effect of altitude on the resonator-heater. This problem needed clearing up to determine whether the resonator burning-process could be used for heating the leading edge of wings, or for other heating applications. The first investigation on this was carried out on high-altitude engine test stands.

To carry out the heater investigation the existing forced draft installation of the engine-altitude apparatus was connected to a cylindrical tank. In this was placed a Karcher-resonator (Fig. 24) with a built in transparent glass inspection vessel. The operation of the resonator-burner could be measured at various underpressures, which could be set by the forced draft system, and conclusions as to the effect of altitude and the variation of ignition limits could be made.

This investigation was not concluded. It proved, however, the fundamental possibility of the employment of such burners up to altitudes of 8 kilometers and more. The Argus firm had already undertaken high-altitude flight investigations with the aero-resonator; the investigations established that the resonator engine still operated at 8 kilometers, but with greatly decreased useful thrust. A general comparison of the Argus flight tests with the Stuttgart altitude-chamber measurements was not made.

Multiple Aero-Resonators. After much consideration there was built at Stuttgart a blower test stand for the investigation of the operation of connected multiple aero-resonators. It had been found during the heater investigation that two exit openings placed closely next to each other would cause both engines to operate out of phase. Noise and vibration therefore would be reduced. This naturally stimulated an interest in having three and multi-engine arrangements. The observations showed a natural balancing in a 3-phase or in a multi-phase rhythm.

Thus a new field of experiment came to light, that of proving whether this effect had application for the operation together of large aero-resonators. It was clear that the exact measurement of these effects upon the thrust and the fuel consumption would be very difficult. Nevertheless, in cooperation with Ainring, a double test stand of the pendulum type was planned and built in Stuttgart.

The first measurements showed that the sum of the single static thrusts was greater than the resultant thrust of the out of phase operating double-tubes. The whole complex question of double-tubes is still open. Wind tunnel tests to clear up such problems could, in Germany, only be carried out at Ötztal.

The car test stand of Figure 32, which was placed on rollers, was built by the group of Hoffmann of DFS, who had since 1944 worked at the Instute of Prof. Lutz. The roller-car was made extraordinarily heavy by hanging a large weight under the car. The great weight of the car compared to that of the tube compensated for the irregularities of the explosions.

The test stand was arranged for two kinds of thrust measurements. In one of these the operating tube forces the car against a simple coil spring, similar to a train against the shock spring of a bumping post. The displacement of the spring caused by the thrust could be read directly on the ways of the roller-car. In the second method a quartz cell was placed on the spring to measure the resistance, and this operated with the oscillograph measurement method. The calibration of both methods was accomplished by creating an initial stress on the test stand by means of bolts and measuring it with a calibrated spring dynamometer.

Comparison of measurements on the same resonator tubes with the information of the Ainring chassis-car results was not carried out because of the distance involved, but the results were very informative. This test stand is considered more serviceable than the chassis-car test stand.

General Test Stand Improvements. For further improvement, static test stands without air blowers or water cooling arrangements were useless. In building a stand one must strive for a high air-blast velocity, or one with which it would be possible to investigate better tube cooling, or the aerodynamic effect of various refinements of noses and valves.

After shutting off the fuel it is desirable to let the blowers for some length of time or to let them blow down slowly. In this way the afterburning of the fuel that leaks out into the nozzle is hindered and the valve box is protected from this heat. The glowing tube is also cooled quicker and can therefore be removed, or other changes can be made. A renewed start with a cold tube and with fresh air filling the tube is easier than with a glowing one, in whose interior some exhaust gas remains.

The noise on the test stand presented great difficulties. Sound proof walls, which for the high frequencies of about 50 cycles per second were about 3000 mm. thick

Abb. 35 DFS.-Ainring Resonator-Versuchsfeld 1945

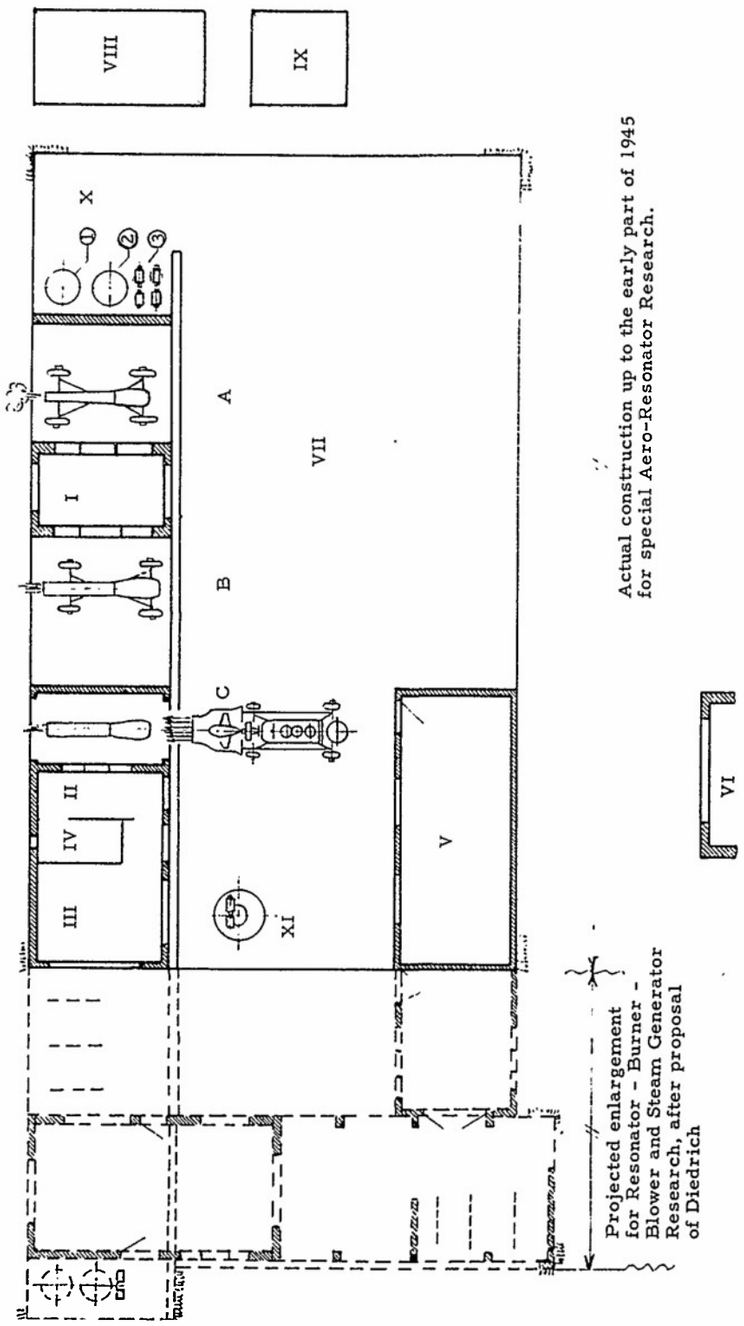

Actual construction up to the early part of 1945 for special Aero-Resonator Research.

Fig. 35 DFS. - Ainring Resonator - Versuchsfeld 1945

were built. This construction should be pointed out as exaggerated, since with a simple test cell with double glass windows the sound intensity could be reduced so much, that the reading of the instruments was possible without car-plugs.

It was established through medical research that the sound arising from the aero-resonator did not contribute to any known functional disorder of the body. It may be, however, that with time it might cause hearing difficulties.

The author found the experiments with benzine atomization very disagreeable. For atomization and mixture regulation experiments good ventilation of the test room is required.

Working for long hours under the influence of this engine's characteristic noise intensity required an immense physical exertion and caused exhaustion and intense fatigue. Direct pain in the inner ears is caused by engines with frequencies of about 150 cycles per second.

Resonator Test Field Establishment and Planning in Ainring. The experimental field at Ainring is an example of an entire resonator test stand establishment built for research on special questions. Figure 35 shows the entire layout of the grounds. The establishment was still under construction at the end of 1944. Only stands A and C were in operation. The chassis-measurement-car test stands A and B could jointly be served by Instrument Room 1. Stand C was of the blower-pendulum test stand type sketched in Figure 33. This one was used in conjunction with Observation Room II. Here flame formation research on the internal combustion process was conducted, while on stands A and B developmental work was carried out.

Observation Room II contained the oscillograph measuring apparatus. In Room III a fine mechanical work-shop was arranged for making the instruments and the mounting fittings.

The Shed (V) housed a sheet metal and welding shop. It served also as a depository for small apparatus, valves, atomizers, and fuel regulator parts.

The mechanical work-shop (VI) was finished shortly before the end of the war. It was used for experimental operations of special importance. Here experimental resonators, valves, and large parts, through which values of air mass flows were obtained, were built.

Next to the mechanical work shop (VI) was the (ommitted from Figure 35) office, locker room, and wash room. A design office, set away from the test stand noise, completed the test field.

In front of the test stands there was a large roofless concrete equipment area. It was possible to move the portable blower equipment in front of each test stand.

A large fuel tank was placed at VIII. The fuel pumps 3 and the tanks 1 and 2 with accompanying filters and fittings were placed at X. The section X was intended for injection and atomizer research.

The ground beside X served as a storage spot for experimental tubes. A tubular supply tunnel was in front of the roofed-in test stands and instrument rooms X - III. In it were compressed air, fuel, water conduits and electrical cable, which supplied all the test stands.

The water well with the water pumps and a large water storage tank was placed at XI.

The author had planned a second construction, which was never carried out because of the war situation. Here, fundamental research on burning gases, blowers, and steam generators was to be carried out. From the work carried out separately in this field it was known that these developments could be investigated together with the aero-resonator engine. Since work in one field obviously can be applied to neighboring and bordering fields, duplication can be spared by combination.

It stands to reason that the resonator-combustion process opens up still further fields of employment, so that it would be compensating to set up a systematic research operation. In these bordering fields the author pursued some very promising problems, which originated from the practices in the fields of turbine construction and firing techniques. Since there was very close cooperation with the head of the experimental field at Ainring, Dr. Eisele, work which proved to be very interesting was transferred to DFS for expediency at the beginning of 1945.

Other aspects were considered in deciding on the transfer of the resonator research to Ainring and the resulting expansion. There already was in existence a close cooperation with the DFS-Flight-Test group in Horsching. Furthermore, in Ainring test cells could be built, which would be of great value for special investigations.

On the other hand a large wind tunnel was under construction in Öztal, which operated at sound velocities and had a test section diameter of 8 meters. This tunnel was made of metal. It was expected that the metal construction would be more advantageous than concrete because of the alternating pressure strains of the resonator. The wind tunnel in Öztal could be reached very conveniently from Ainring.

The setting up of special altitude test stands was at first disregarded since it was simpler to make altitude investigations with flight tests. It appeared expedient first to evaluate the high-altitude chamber measurements carried out at Stuttgart over a long period of time, which would prove whether such stands were absolutely necessary.

Wind Tunnel and Flight Investigations. The wind tunnel and flight investigations of the resonator engine were possibly of even greater importance than the static investigations. For employment as an inexpensive expendable engine for the flying bomb, not only was an engine suitable for mass production to be created, but it also had to have an aerodynamically favorable body, achieving through minimum weight and volume large absolute thrust and having essentially lower fuel consumption than a rocket engine.

Measurements in the A_2 Wind Tunnel in Braunschweig. Wind tunnel measurements were carried out at Braunschweig only. The A_2-tunnel was operated for this object in the Eiffel manner. The principle method of tube installation in the test section is shown in Figure 36. The tube was held with six spring pendulum

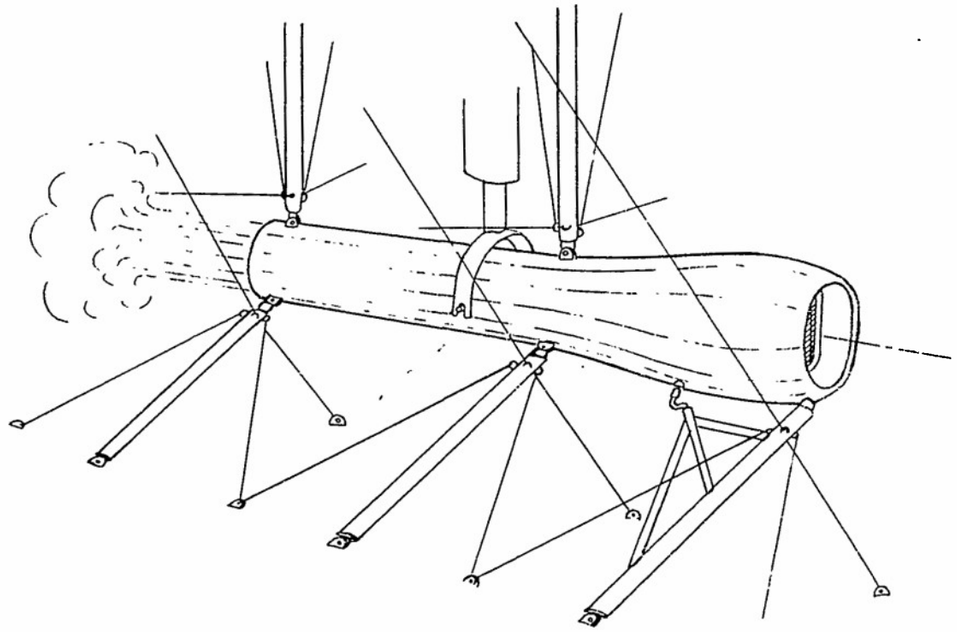

Fig. 36 LFA - Braunschweig: Hanging support for the ARGUS-AERO-Resonators in A2 - High velocity - Wind tunnel

supports that were arranged in two planes, at 120° radial intervals. The thrust force was taken from an enclosed measurement stirrup, whose motion was transmitted through rods and an angular lever to a quartz transmitter. An exact description of the experiments and the measuring arrangement is given in the LFA reports:

Dr. Zobel: "Versuche im Hoch-geschwindigkeitskanal der LFA Braunschweig an Strahlrohren Parts 1-3 (21.1.43, 22.2.43, 24.9.43)." Essentially two fundamental resonator types were investigated, cylindrical and combustion chamber types. The influence of surface conditions on the variation of the thrust characteristic was measured, using various cowl forms and spoiler cross sections.

Windtunnel measurements at velocities in the high subsonic region are still a problem. The influence of the tunnel supports on the measurement results is very great. On the other hand, the static thrust measurements had shown that with the periodic manner of operation an installation with damping members appeared to be advisable, if exact result curves are to be obtained. The wind tunnel measurements carried out here had to be evaluated at the outset. Tests with improved supports were outstanding. A wind tunnel balance was found which did away with the need for the guy-wires shown in Figure 36. It is, perhaps, expedient for all experimental work — stand tests, tunnel tests, flight tests - to employ the fully developed mounting, the same used in the launching tests of the V-1.

A further point, whose influence on the exactness of measurement has still not been cleared up, is the question of blockage, i.e. the ratio of the resonator cross-section area to the tunnel cross-section area. The resonator-tube alone had a 4% blockage; the support contributed a further 2%. In general the blockage should not be over 2%. From this it follows that the Braunschweig A_2 tunnel was too small for the testing of the resonator series of the V-1.

From the measurements it was concluded that the interesting range of high flight velocities was covered with too few test points. The values measured in that range were also of the least certainty.

The flap box could not be observed during the test run, also it could not be established whether ice would form in the valve corners following the low temperatures caused by large flow velocities. The engine was very sensitive to alterations in front of the flap box. Therefore the condition of the flap box always had to be watched carefully. From the abundance of wind tunnel measurements one could not obtain a clear general view of the effect of changes, since several alterations were made simultaneously.

The A_2-tests in Braunschweig of the aero-resonator engine furnished the following data:

In order to be able to bring about fundamental research on a broader basis, the high velocity wind tunnel measuring technique for such engines must be systematically developed further.

When wing sections and streamline bodies are particularly to be investigated, windtunnels proper for these purposes should be used. Now, however, new problems arose, and the same overall problem occurred for the T-L engines, Lorin engines, and jet engines. The windtunnel, therefore, should also be able to function as an engine test stand.

It would have been worth while, perhaps, to have made similar tunnel measurements with the aero-resonator engine once again at still another place, in order to obtain further data or support influence and similar tunnel effects. The question of model experiments with resonator engines is still completely open. A first experimental engine was even built by the author, but it has not yet been tested.

The industrial development of the resonator-engine could not wait for the development of the high-velocity measurement technique, and therefore, with relatively simple flight experiments, the high velocity problem was attacked with the systematic empirical technique. Values were obtained which, even with corresponding reduction, did not agree with the tunnel measurements, but in this way production of the series was allowed, and the engine was put into flight use. A satisfactory explanation of this difference has never been supplied. This situation is troublesome as far as future development is concerned. Since 1943 very little has been done to improve the engine. The firm Argus, which was happy to have brought

the engine to a series, limited itself mainly to the development of the mixture regulation and upon elimination of objectionable features cropping up in the series.

The mixture-regulation development became a domain of the Argus testing. It seemed that the engine was already developed to its output limit. Ideas for bettering the outer shape and for increasing the thermodynamic efficiency were no longer at hand.

Flight Investigations. In proceeding from the first flight investigations to the functional tests of the tube properties and of the effect of altitude and service methods, there was slowly developed a flight measurement technique. At first the effect of the tube operation on the airplane had to be determined. While doing this, many instructive incidents occurred.

A ME-109 was first used as a fast flight test stand, with a resonator-tube arranged under the fuselage. The tube opening did not project out beyond the tail surfaces. Because of the heat the tube had to be kept a considerable distance from the fuselage wall; on the other hand, because of the oscillating pressure stresses, it had to be close to the body. This resulted in the requirement that the openings of the aero-resonator be allowed to project out beyond the tail surfaces.

Although the Argus flight tests were initially made at Diepensee, a special resonator flight test group was formed later at Rechlin. The ME 100, JU 88, DO 217, and the Heinkel 77 were used as test planes.

Aircraft with double tail surfaces were well suited as flying test stands. Here the aero-resonator could be arranged on top of the fuselage.. The jet exhausted freely between the tail surfaces without endangering the steering performance of the airplane. The rebuilding of the ME 110 and the DO 217 as test stands was therefor very practical. The resonator engine was supported in pendulum fashion; the force was transmitted to the inside of the plane, where it was registered on an oscillograph.

The Heinkel 77 and the JU 88 were rebuilt so that the resonator could be arranged laterally between the fuselage and the engine nacelles. At this position there already existed bomb racks, so that the changes were carried out very simply. When the complete V-1 missile was launched from an airplane at a later time, the side support proved to be best.

At Rechlin investigations were also made with a manned V-1. Since the ground velocity of the V-1 was over 220 Km/hour and since the missile was not equipped with any special landing aid, such investigations were injurious to the pilot and resulted in the injury or destruction of the missiles.

Cargo gliders were also used as test carriers. Tests with the GO 242 were made at Rechlin, while experiments with another type of cargo glider were carried out at Ainring. The object of these investigations was obviously to improve the gliding angle of the cargo gliders, in order to increase their maneuverability in coming down to a landing.

The problem of the manned aero-resonator interceptor aircraft was energetically prosecuted at Ainring. This resonator-interceptor was placed on top of the carrier aircraft. It was equipped with two aero-resonators arranged under the wings. This investigation could only be carried out as purely functional testing. In order to continue the development of the resonator-interceptor, the engine needed to be improved further.

The flight tests with airplane carriers at Rechlin and Ainring indicated the necessity of investigating not only the thrust dependance on the velocity but also on altitude. The flying of the fully developed aero-resonator over the whole range of flight velocities and altitudes was first carried out at Ainring in 1944. Since then the airplane firms have been given a useful aero-resonator portfolio with corresponding power-diagrams.

Launching Investigations. Another method of flight testing was the launching investigation of the V-1 at Peenemunde. Much work had already been done in Germany on the subject of catapulting aircraft. There were the specially-built ships used to catapult the South-Atlantic service Dornier flying boats, and also the mail planes catapulted from the fast steamer Bremen.

In launching the V-1 the total missile weight of 2.2 tons had to be accelerated. The launcher was operated with "T-Stoff" as the pressure agent. The T-Stoff was disintegrated with the aid of disintegrating stones, thus causing the formation of vapor and the necessary increase of pressure of the resulting hydrogen peroxide vapor. The H_2O_2 vapor passes through a quick-opening valve to the moving piston of the launcher, which swiftly moves through a tube along the launcher length. Attached to the piston is the driver hook of the V-1 missile, which in this manner is brought to the necessary take-off velocity corresponding to the angular position of the launcher.

The take-off takes place with the resonator engine running at full load. By measurement of the flight velocity of the V-1 missile it was possible to reach conclusions as to the obtained useful thrust, inasmuch as the aircraft polar was known. From knowledge of the flight duration, one could obtain the specific fuel consumption.

The great number of launching tests at Peenemunde covered the functional tests of regulation, rudder mechanisms, and course gyroscopes.

Summary. The variety of test methods with stand, wind tunnel, carrier airplane, and launching investigations require trained and sensible specialists, whose education, after all, takes years. The work of these skilled specialists, however, will result in a low efficiency if it is not possible to coordinate individual knowledge with the necessary engineering flexibility under a universal angle of vision. The investigators should be allowed, depending on their rank and importance, to evaluate and accordingly initiate new projects.

The work of the author was directed towards this professional goal. From observation of the structure of research carried out while surveying the possibilities of the entire jet engine field, it was found that there existed few scientists who, upon proposing new innovations were in a position to carry out the work. Nevertheless I succeeded in gathering a number of well-qualified workers that could travel together along a new road, so that in a short time it was possible to form the Resonator-Research Center in Ainring.

CHAPTER III

RESONATOR VALVES

Inlet Valves

Fundamental Requirements. The combustion air mass flow passing through an aero-resonator is much greater than that of the equivalent reciprocating-engine propeller unit. Accordingly the inlet valve must be designed for a large "swallowing" volume. The outer measurements are fixed by the combustion chamber and nose nacelle diameters; consequently the optimum outer valve shape is the circular disk or the circular cone.

A strong and stiff valve frame is the first requirement for good valve construction. It has been shown in practice, for example, that the endurance of the flaps are considerably diminished when valve frame bending occurs during operation.

The mean effective pressure that is achieved in the aero-resonator by virtue of the periodic sequence of explosions is very low. Its value is about three-tenths of an atomosphere; therefore the suction losses are of greater importance than those of the piston-combustion engine. One is forced, in new designs of resonator-valves, to give consideration to short flow paths and small defection angles.

The fundamental requirements are:

Harmonious Construction, for the achievement of an aerodynamically favorable form.

Valve Stiffness, with the object of diminishing the vibrations and heat expansion resulting while the tube is running, and finally the designing with regard to a good

Mass flow Value, close to the range desired.

It was not possible to utilize a commercial valve in the flying resonator, although this was investigated at the start. As it was of importance, at the beginning of the development, to get an engine functioning immediately on the stand, the questions of the outer aerodynamics and the most favorable flow valves were at first given little consideration. Also the principal question whether an automatic valve or a forced controlled valve was more useful was of a secondary nature. For the functional investigations both types were used.

The simplicity of the automatic type caused the latter to dominate the field, although some test results with controlled valves indicated possibilities for increasing the output of the aero-resonator.

Automatic Valves

Schmidt Conical Valve (conical ridged rib system): The simplest valve element is the spring plane valve flap operating automatically in time with the explosions (Fig. 48). P. Schmidt had already made a great number of investigations with this flap type before the resonator development of the Argus firm started in 1939. The plane valve flaps are, however, suited for resonator valve construction only when the bending and alterations of form are successfully held to small values.

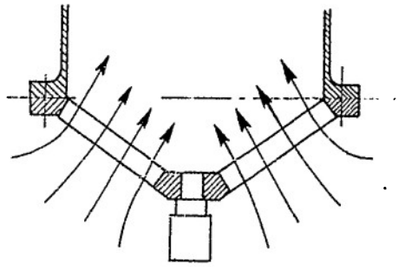

Fig. 37 P. Schmidt: Conical valve for "Resonator 500"

In the course of the development the Schmidt firm discarded plane flaps and adopted angular flaps, which depended upon the ridged rib type of construction. The principle of construction is illustrated in Figure 38. The pairs of flaps are

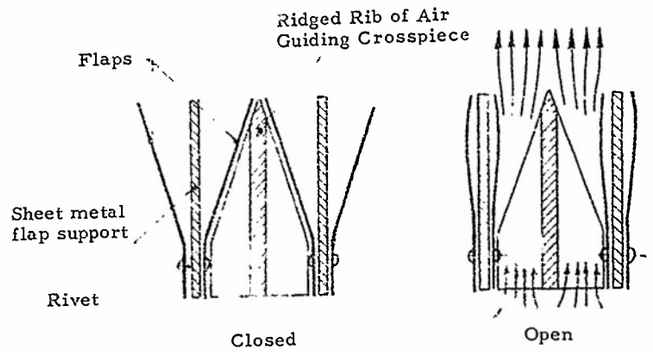

Fig. 38 P. Schmidt: Central flap element of Conical Valve for "Resonator "500" Conical Ridged Rib System.

riveted to a sheet-metal flap support. The flaps lie roof-like upon the air-guiding crosspieces. A ridge, formed by beveling, is struck by the free end of the flap. The sheet-metal flap supports with the riveted flaps are exactly placed between the air-guiding crosspieces in the assembly of the valve, and they are connected to the resonator with bolts and cotter pins.

The conical valve for Schmidt-Resonator "500" (Fig. 37) was developed with these ridged rib valve elements. Since the air-guiding crosspieces were arranged on a conical surface, they had to be formed in sectors. The placing of the air-guiding crosspieces must be done with great exactitude, when they are set on a conical surface, otherwise stresses will result.

The conical construction was obviously selected in order to make the freeflow cross-section of the valve when it was entirely open equal to the free crosssection of the tube. This valve achieved some of the above fundamental requirements, namely the harmonious installation and favorable flow conditions. As the investigations in 1942 in the Braunschweig wind tunnel and on the Argus test stands pointed out, the valve did not satisfy the rigidity requirement.

The conical valve construction was not suited for the series production since the conical form of the air-guiding crosspieces caused large lifting of the outer flaps and little lifting of the inner flaps. This fact effected not only the varying endurance of the outer, middle, and inner flaps, but it affected the inflow process so much that a homogeneous distribution of velocity over the entire valve cross-section was not achieved.

Argus Cubical Valve: In Figure 39 is shown an experimental type of the Argus firm (1940) with which the non-resonator engine (Figure 18) was equipped. The advantage of such a cubical shaped flap box lies in the good accessibility and interchangeability of the individual parts. This valve construction was a technical retrogression compared to the conical valve of P. Schmidt.

With this simple cubical valve many fundamental experiments were carried out, and for the first time the influence of the size of the free entering air cross section on the running of the resonator became known. It was simple to achieve experimental variations by covering up various valve openings. These experiments, together with other investigations on the effect of mixture formation place, combustion chamber improvement, tube lengths, etc., combines to bring about the development of the Argus flat valve.

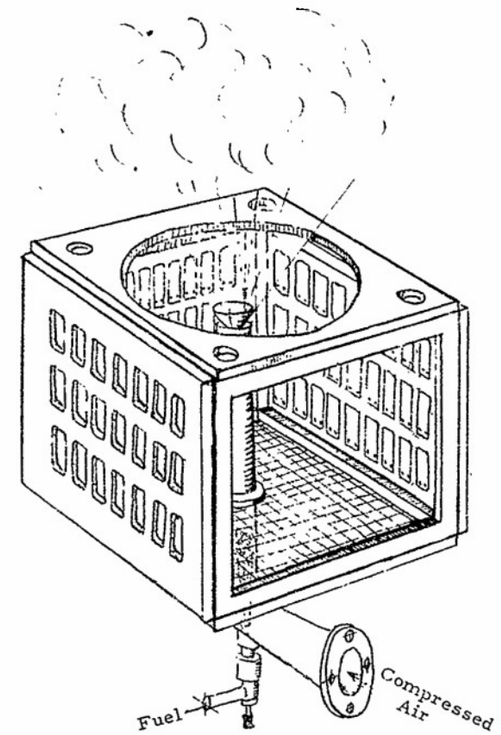

Fig. 39 ARGUS 1940 Cubical shaped flap box (cubical-valve) with central compressed air injection-nozzle (non-resonator type) same as Fig. 18.

Flat Valve Construction, Argus-Motoren Berlin (plane ridged rib system). The fundamental knowledge obtained through systematic experiments, which led to the design of the Argus flat valve with the steady internal mixture formation, showed that with an oversize of the free opening cross section no automatic intake operation would take place on the stand. This fundamental knowledge contradicted the technical intuition that the resonator would function better with a larger free intake cross section. It gave the impetus for the Resonator-Process Patent A 93 713 of the author in 1941, with the first decisive conclusion that one could give up the complicated conical valve type of design.

It was decidedly not necessary to make the free intake cross section equal to the tube cross section. The free valve cross section must be smaller, in order that the required inflow velocities be obtained. Therefore the essentially simpler rectangular form of the flat valve type of construction could be successfully employed.

A fundamental feature of the conical valve, namely the bent flaps, was retained. In Figure 40 the essentials of the series design is shown in perspective (1945). Sheet-metal flap supports and ridged rib crosspieces because of necessity for mass production, made by die-casting were tightly pressed together with the aid of two long anchor bolts, making a rigid construction. The flaps, whose free ends were rolled, are also indicated.

The main advantage that the Argus flat valve has over the Schmidt conical valve is that it utilizes only one flap shape, and accordingly only one ridged rib angle. Because of the rigid structure, the design proved to reliable in operation and easily demountable. The simple ridged rib crosspiece was, because of necessity for mass production, made by die-casting.

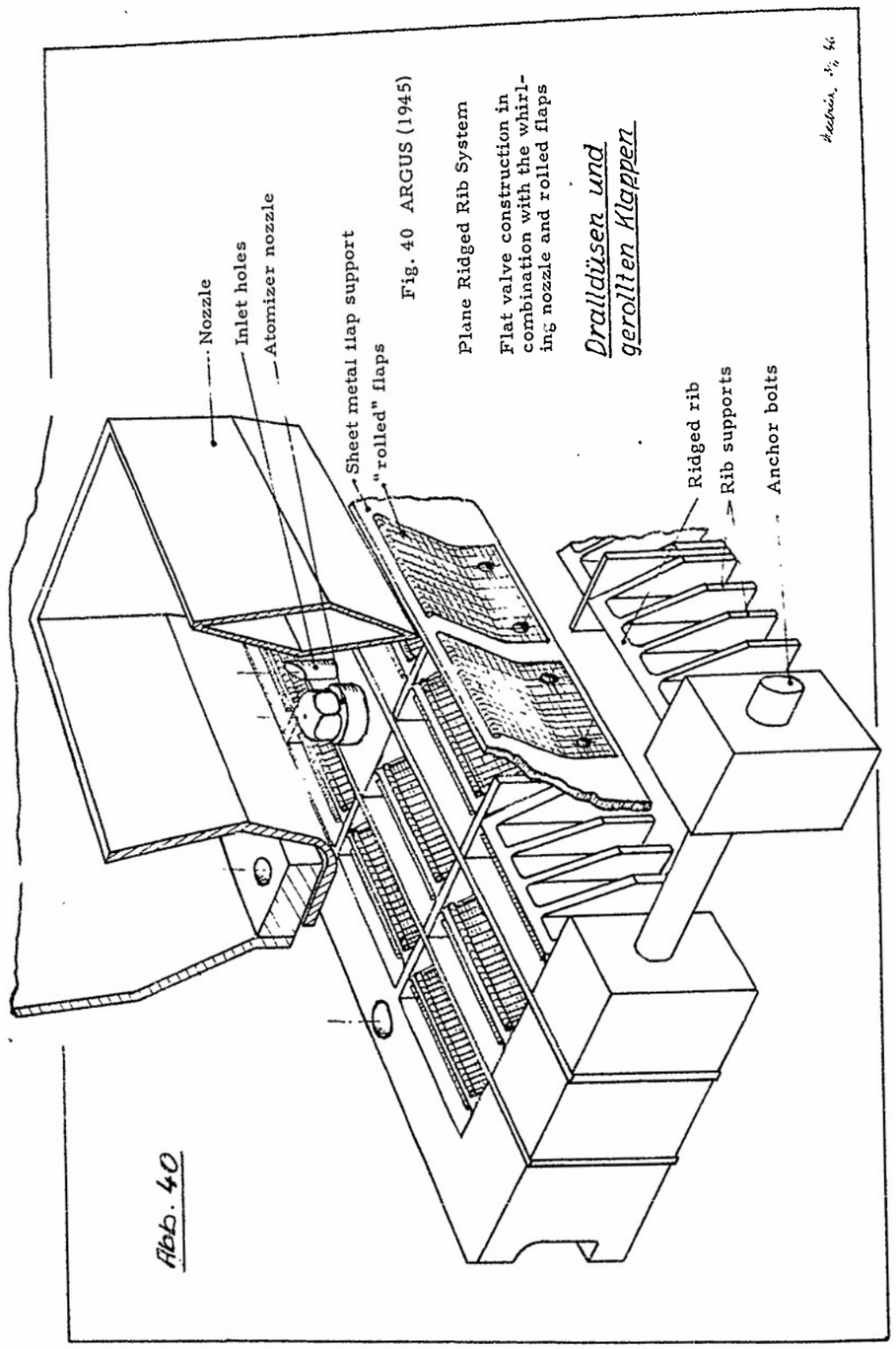

Fig. 40 ARGUS (1945)

Plane Ridged Rib System

Flat valve construction in combination with the whirling nozzle and rolled flaps

Dralldüsen und gerollten Klappen

The improvement of the flow passageway proportions of the Argus-flat valve was undertaken by the author in 1944 in close cooperation with the DFS (Eisele). An initial proposal was made to round off the sharp inlet edge of the valve cross-pieces, and eventually much material was removed from the crosspieces in order to reduce the "wetted" surface area and improve the flow conditions. This mode of attack produced, after numerous test runs, a satisfactory reproducible increase of useful thrust, with a simultaneous reduction of specific fuel consumption.

Experiments to determine the effect on the flap elements of rounding off and replacing the rib-crosspiece supports were conducted at the Luftfahrtforschunganstalt Braunschweig. The flap elements were opened by a steady flow of cold air. The results indicated an increase of the air mass flow (Investigation by Hummel).

Ruden of DFS investigated valve intake questions in connection with the nose inlet problem in the DFS smoke tunnel. Supplementary to the special valve investigations of Eisele of DFS, he cleared up the effect of the nose on the valve opening.

The results of the first investigations with the aerodynamically-refined Argus flat valve led to a new valve design, with which the limit of thrust increase through valve improvement could be ascertained. This valve was constructed of sheet metal and had an extremely large distance between the rib supports. The flap width was about a quarter of the entire valve width. With this design the thrust was increased from 340 to 385 Kilograms (748 to 847 pounds), but the flap life was so much lowered that this valve was only suitable for experimental operations and was not used in the production of the series.

A redesign of the Argus flat valve was undertaken by the P. Schmidt firm at the end of 1944. The object was to simplify fabrication through the use of sheet-metal construction and simultaneously to achieve an increase of valve life. The better endurance was to be achieved with stronger valve flaps. The principle of construction is shown in Figure 41. The sheet-metal supports supplied with notches at intervals were fitted into the sheet-metal rib supports and welded at the cross points so that a construction similar to a lattice resulted.

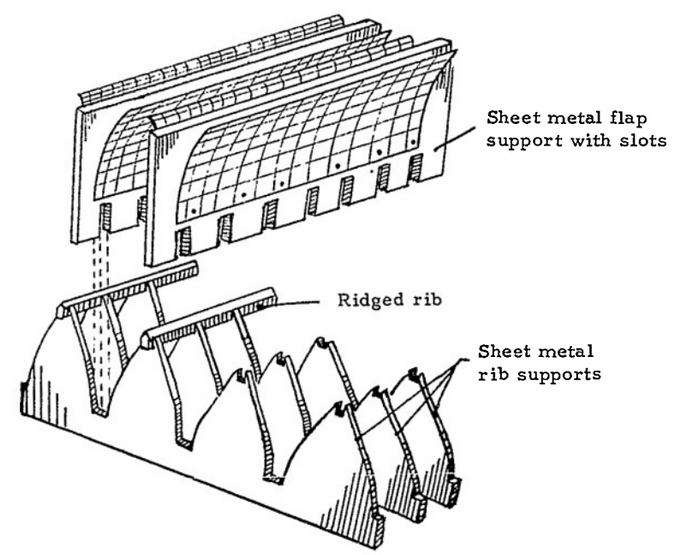

Fig. 41 Factory P. Schmidt: Construction of the "Sheet metal-flat valve" (Heidemann) . Bent Schmidt - flaps

The valve had long continuous flaps. The distance between the rib supports was closer than in the Argus die-cast valve. The conception under which the Schmidt flat valve was built was therefore opposite to that of the DFS valve.

Stand and flight tests with the Schmidt sheet-metal valve showed that about the same operating values as that of the Argus die-cast valve could be achieved. The endurance of the long continuous flaps was somewhat better. The fear that the long flaps would warp and that a tight closing could not be obtained proved to be groundless.

Flat Valve with Plane Flaps. In Figure 42 is shown a design whose simplication was in reducing the need for special sheet-metal flap supports. The flaps were riveted to the back side of the corresponding rib crosspiece. The main advantage

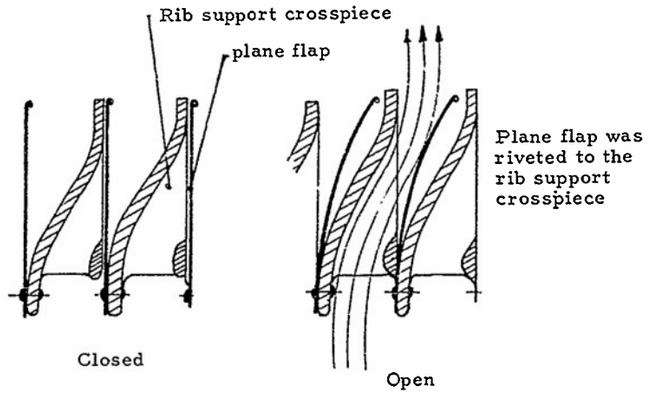

Fig. 42 Diedrich: 1944 Flat valve with plane flaps (displaced entering flow)

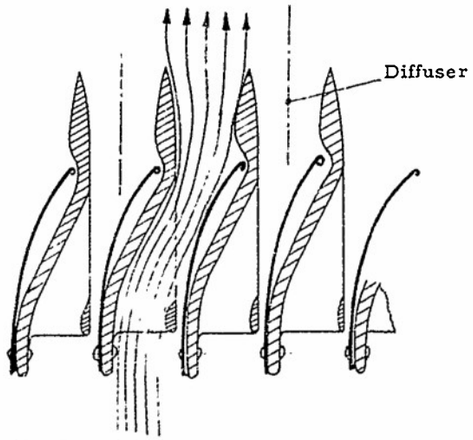

Fig. 43 Diedrich: 1944 Diffuser - Flat Valve (directed flow) (the individual valve elements are shown pulled apart)

of the flat valve with plane flaps, which can be die cast as well as made of welded construction, is that endless bands of hardened spring material can be used. The flap bending process is eliminated.

Diffuser Flat Valve. The valve shown in Figure 43 had a built in diffuser behind the valve exit. The flow that is forced through the valve is once again collected in a diffuser and then guided to the combustion chamber. A moderate ram intake could be expected. Initial tests with a diffuser-guiding apparatus, which was fixed to a normal series-valve, showed a small improvement in resonator output.

Indented Valve Flaps. As is shown in Figure 50, the flaps are bent in various forms depending on the effective pressure difference. In order to keep the bending small, the flaps had to be supported with the prevailing rib type of construction. For this purpose the air passageway was shaped so that the stationary ribs formed the bearing edges for the flaps. The rib supports have the fundamental disadvantage in that they:

(1) obstruct the free cross section, and

(2) deteriorate the flow through the valves through friction and turbulence.

At the end of 1944 the author proposed a fundamental new way to solve the problem of the optimum valve with his notion of making the flaps in themselves stiff to bending. This meant the giving up of the ridged rib system and going over to a self-supporting construction. The development stride that was made is shown in Figures 44 and 45. In the valves built as yet it has not been possible to free the cross section completely from obstructing ribs.

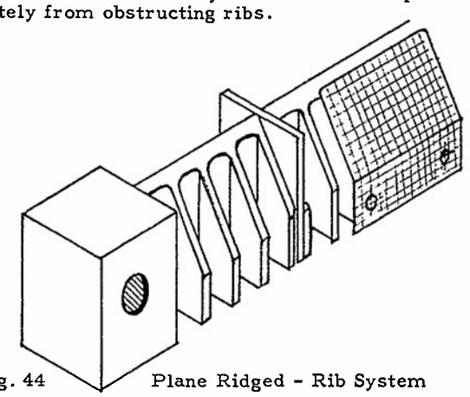

Fig. 44 Plane Ridged - Rib System
(F. ARGUS:) Flaps lie on the ribs.
(The flow is compressed in passing through the ridged ribs)

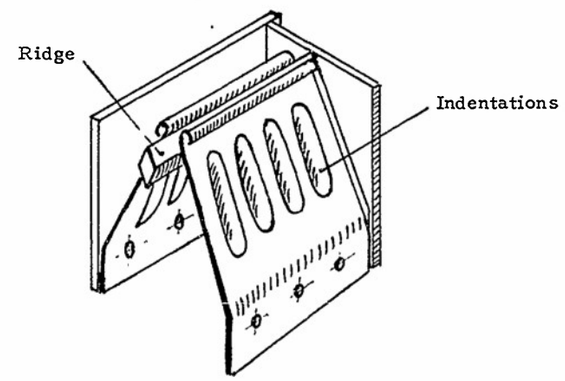

Fig. 45 Diedrich: (1944) Self supporting system made stiff with indentations
Flaps are supported only at their edges.
(Fully free through flow)

The first indented-flap valve investigation took place during April 1945 at Ainring. There it was shown that this valve improved the static thrust of the argus-resonator from 340 up to 390 Kilograms (748 to 858 pounds). A similar value was achieved, therefore, as with the previously described DFS valve.

Endurance runs were not made with the first indented-flap valve, since the design was not fully developed. The riveting of the flaps was not perfected. The long indentation shown in Figure 45 proved to be a favorable indentation shape. These tests indicated that this valve has an excellent chance for a successful further development, and that it is the optimum with reference to ease of fabrication.

Other Valve Designs

Dines Valves (Figure 47). For small resonator types, especially for heaters, other valve types besides spring flap valves are of importance. The author, for

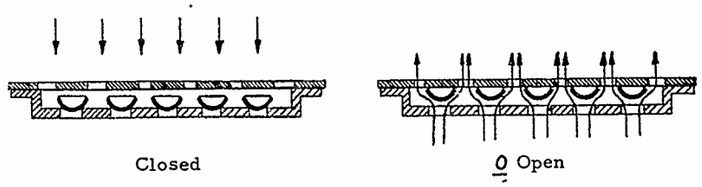

Fig. 46 Karchner: Calotte valve for Resonator - Blower

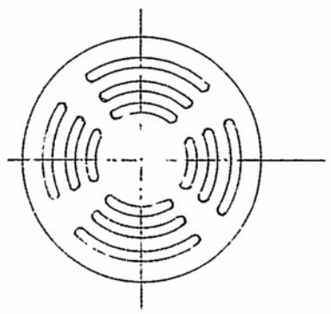

Fig. 47 Smooth Dines - Valve plate with circular arc slits

example, initiated investigations with Dines valves, which were used for various purposes in machine construction, to determine whether the design principle could also be generally used for resonator devices.

The Dines valve can be illustrated as a design, for example, wherein the closing element is separated from the spring. The closing element is illustrated in Figure 47. The flow passes through circular arc slits, which coincide with corresponding openings when the plate of the upper valve line is lifted. With a dropping of the plate the slots are covered up.

The valve plate is polished and is pressed onto its support with an adjustable spring. The valve could be adjusted for the existing pressure difference by varying the tension of the spring.

The investigation showed that Dines valves were not suited for resonator operation in their usual form, since poor mass flows were obtained and since they could not be built for frequencies greater than 25 cycles per second. The construction principle of the Dines valve, namely, the separation of the closing and the spring elements may, with development, prove important for resonator-heaters.

Caravodine's Valve. The valve Caravodine used was a simple spring-closing valve. Of special notice was the fact that the lifting distance and the spring tension could be varied from outside. The running of the resonator could be influenced to a great extent by changing the spring tension.

Spring-closing design. A constructive solution of the problem of separating the spring from the valve flaps was also investigated with the flat valve. In Figure 48 is schematically shown an example of a spring-closing design without regulation facilities or facility for varying the spring characteristic.

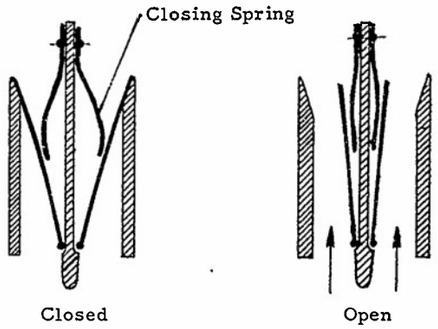

Fig. 48 Diedrich: Spring-Closing Valve

Kaercher's Spherical Calotte Valve. The spherical calotte valve of the Kaercher hot air blower (Figure 24) can be illustrated as another type of automatic valve. The principle of design of this valve is shown in Figure 49. The spherical calottes are arranged so that they are free to move between sievelike plates. The distance between the sieve-plates was such that the calottes could be raised a few tenths

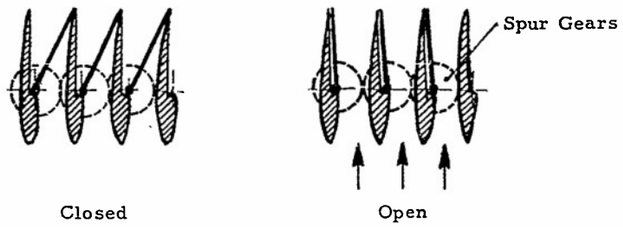

Fig. 49 Measurement group Eisele: Controlled Spring plate valve (DFS) SCHAFER: (Synchronized with spur gears

of a millimeter. The spherical calotte valve can operate only in vertical position, since the closing force is derived from the weight of the calottes. The calotte-valve is of no importance for flight resonators because of its high flow losses.

The number of automatic operating valve types has not been exhausted in the foregoing discussion. Inasmuch as widely varying constructions have been used successfully, it has been simple to derive from them the following fundamental considerations.

Fundamental Flap Problems and Test Arrangements. Since the valve construction is closely related to the flap question, up to the present both have been treated together. The fundamentals of the flap opening and closing process will, however, be discussed separately here. It is shown in Figure 50 that as the flap opens as a result of the pressure force, it is bent as an elastic line. Through its own spring force, and as a result of the impact of the explosion pressure on the spring plate, the spring plate is returned to its support surface area. In doing so the total energy of motion is transformed into work of deformation of the flaps and the support sur-

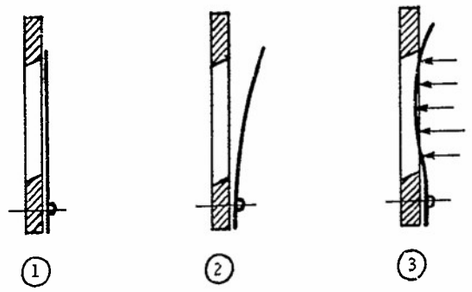

Fig. 50

Deformation of a plane valve-flap

Ventil-Klappe

face area. The duration of overpressure existing in the tube bends the flap in the middle, somewhat as shown in Figure 50, part 3. This deformation can be so large for thin flaps and for those with relatively large opening that the flaps become so convex as to dance out of their openings.

Stronger spring flaps with larger mass should be used so that the bending will be reduced, but then the impact work of the free ends of the flaps is increased, so that the working frequency of the resonator, its intake, its mixture formation and therefore the resonator running and the flap life are affected. One can see from this qualitative reasoning that the improvement of the performance of the resonator in its present form is primarily a flap problem.

Furthermore, there is a possibility of improving the thermodynamics of the resonator by increasing the mean effective pressure, which affects the fundamental limits of stress of spring flaps. The flap problem is the key to the further development of the resonator combustion process.

Pre-lift Flap. The Schmidt firm carried out investigations at an early date (about 1939), for the purpose of overcoming the deformation of thin spring flaps through the use of a pre-lift flap construction. Figure 51 shows the opening process of the

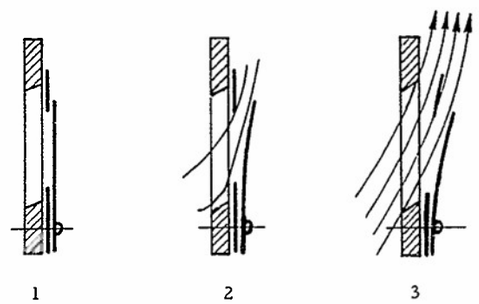

Motion of a plane pre-lift flap (P. Schmidt)

pre-lift system, which consisted of a small first opening cover plate, as thin as possible, and a bordering plate which frees the entire cross section upon opening later.

Cushioned Flap. The idea of using a springy support under the flaps, as for example rubber, was tried in several experiments at the Argus plant (Fig. 53), but this scheme produced no convincing improvement in endurance. It can be qualitatively seen, of course, that with the cubical valve an increase of endurance of the valve side facing the rubber surface will be obtained, but a satisfactory workable solution for the ridged rib design was not found.

Overhanging Flap. In Figure 52 is shown another proposal of Schmidt from which was expected not only a longer flap endurance but also a favorable influence on the flap opening process. The hard impact on the support surface was to be diminished by the elastic effect of the flap ends. No results exist with this flap design.

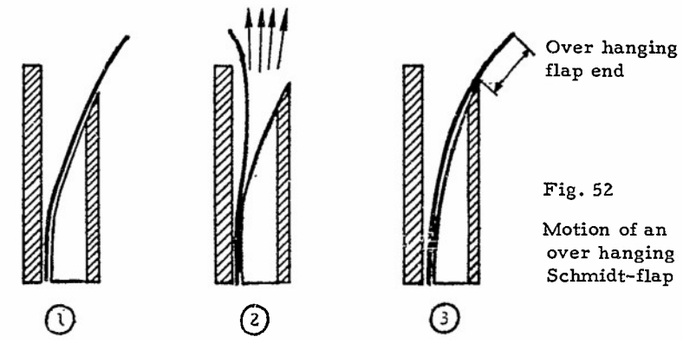

Fig. 52

Motion of an over hanging Schmidt-flap

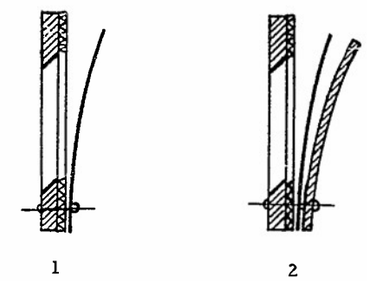

Fig. 53 ARGUS 1940 Flaps with spring cushion and with lift limiter

Highly Curved Flap End. The flap ends are distorted first by the impact work. The cubical valve (Figure 39) was in 1940 investigated with plane flaps with highly curved ends. The results were insignificant, since the flap end sprung up again after seating, then struck again, and therefore tore to pieces much more easily.

Rolled Flap Ends. The notion of having a firmly formed flap end resulted in the rolled flap end. Although the height of the free oscillations is increased by the rolled ends, it was shown that essentially better results were obtained than with the highly curved flap ends. The explanation for this lies in the different heat treatment of the flap materials. The rolled spring flaps were made of soft sheet steel, bent, rolled, and finally hardened. Rolled flaps were installed in the production series in 1945.

Various Flap-support Forms. It had been proposed that better endurance might be obtained by changing the flap support shape. Investigations of this nature were carried out by the Argus factory, by P. Schmidt, and by the Forschunganstalt Braunschweig (LFA). Investigated were circular arc flaps (Fig. 54-1), straight flaps with a small bend angle (Fig. 54-2), and flaps bent with a large radius of curvature (Fig. 54-3).

With a too small radius of curvature the flaps fracture in the neighborhood of the edge of the bend. The circular arc flap, which is the limiting case of the flap with large radius of curvature, proved to be no improvement.

The allowable rising height of the free flap end is a measure of the increasing of the charging of the resonator and of the improvement of the static thrust. In general the installation and production tolerances of the flap box were so large that slight variations of closing tightness exercised only a small effect on the flap endurance.

The distance between flaps, which is limited by the open position of the flaps, exercises a strong influence on the flap endurance. With a too large separation the work of bending is so great that the flaps fracture very quickly. A bending

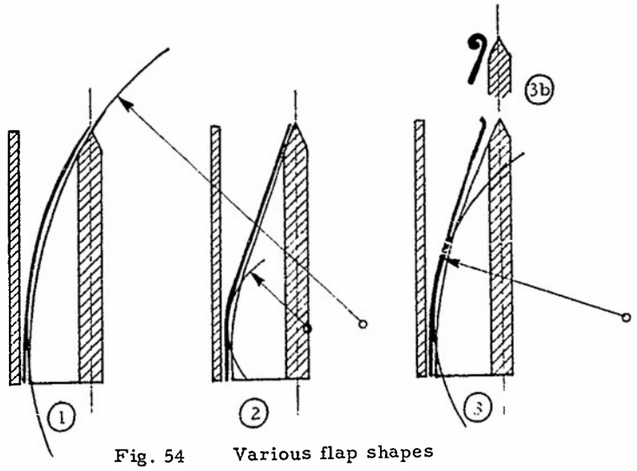

Fig. 54 Various flap shapes

1 Circular arc flap
2 Flaps with small corner radius
3 " " large " "

investigation was carried out in which a piece of sheet metal clamped at the end was bent about forty times a second. It is obvious that only an extremely thin and very good spring material, for example a watch spring, could meet the demand of 100-hour life.

Flap-Test Arrangements. Special flap-test arrangements were first developed in 1944. The Argus firm mainly used the water-cooled resonator (Fig. 29) for the flap investigation. In spite of satisfactorily reproducible test stand conditions, it was shown that endurance in flight was less than on the test stand. Therefore one was dependent on the expensive flight tests for the final analysis of the flap tests.

Further possibilities were endurance tests with blower-test stands and in wind tunnels, but these possibilities are time consuming and costly.

In 1944 a great need existed for a purely mechanical flap-testing arrangement, which would quickly furnish comparative qualitative experimental results, since the flap questions for valve improvement required renewed investigation.

At the Luftfahrtforschunganstalt Braunschweig, Hummel utilized the steep pressure front excited by piston oscillations in a tube to imitate the opening and closing pressure conditions of the flaps. Lettau, who had investigated the laws of wave propogation and the oscillations of gas columns in tubes (Jahrbuch der Deutschen Luftfahrt, 1939), experimentally ascertained the intensity of the pressure amplitude. The resulting pressure diagram is similar to the combustion oscillograph of the resonator, but the maximum of the pressure rise (with Lettau's experimental setup) is less than that obtained with the resonator. Therefore the measured results with such test stand setups will give lower values.

Triebnigg. of the Wankel Versuchswerkstatten Lindau, with whom the author collaborated in the development of the indented-flap-valve, constructed his flap-testing machine from an engine cylinder. The periodic pressure amplitude could be set up with this device and could be varied. Essentially no alterations were made with the exception that instead of exit valves he included a resonator-valve-element.

Comparison of the flap-life times obtained with Triebnigg's arrangement and the values obtained from flight tests exhibited significant differences, although the pressure amplitude with Triebnigg's setup was more intense. The flap-test machine of Triebnigg was operated at lower frequencies.

To summarize, it can be said of the methods of flap testing that it is necessary to develop a flap-testing machine with a sufficiently high frequency, capable of

subjecting the flaps to high load, in order to be able quickly to investigate and compare the individual valve elements. Only complete investigation in flight, or stand tests at the correct blower velocities can give the conclusively correct final results, since there the effects of flap-box heating are also considered.

Flow Valves

The flow valve occupies a separate position under the classification of automatic valves. It has no moving parts; its closing is not complete; it operates like a very leaky automatically operating flap valve ("check valve").

The flow valve has a fixed cross section, which has a varying resistance because of the alternating flow direction. Since the resonator operates with an oscillating gas column, this valve is of ideal simplicity. The development path of the flow valve is very tempting, and should the development of the flow-valve be successful, the aero-resonator could not be surpassed in simplicity, and it would be superior to the aero-duct (Lorin) because of its higher internal pressure. At the same time, endurance operation would be attained, since the flow valve has practically unlimited life.

The fundamental valve principle of the resonator-heater was the Borda mouthpiece shown in Figure 55. The Borda-mouthpiece has a high flow coefficient of $\phi = 0.9$ to 0.95 in one flow direction, and in the opposite direction a lower value of $\phi = 0.5$ to 0.55 because of the constriction.

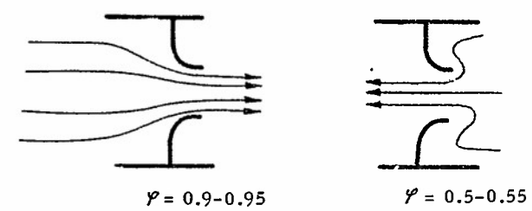

Fig. 55 Borda Mouthpiece

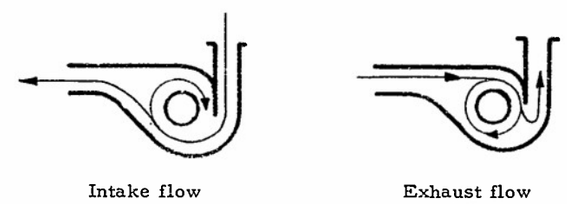

Fig. 56 Whirl - Throttle

As a second flow-valve principle, there is the circular whirling flow in a casing. In Figure 56 is shown the flow conditions during in-flow and at back-flow. The back-flow stimulates the whirling, and the flow can only exit by making a very sharp bend at a large constriction.

As a third principle, which may be employed in the flow valve, the ejector effect of the entering fuel jet should be mentioned. The injected fuel pulls along fresh air, therefore forcing a charging process during the low pressure period. These three effects were superposed in the resonator-heater (Fig. 17), as is shown in Figure 57. The constricting effect of the Borda-mouthpiece during the back-flow process is caused by the sharp corners a and b. A circular whirling takes place at c. The ejector action of the injected fuel increases the strength of the vortices present in the combustion chamber.

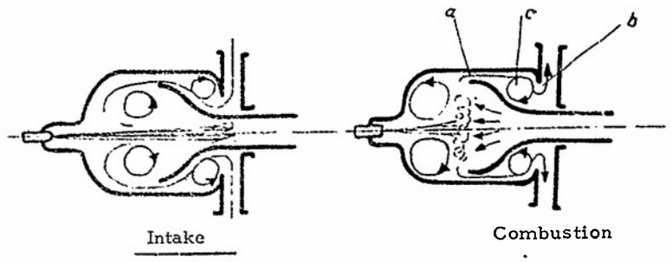

Fig. 57 Whirling flow in Resonator - Heater Fig. 17

The Schmidt firm did not succeed in obtaining free intake operation in 1939 with the resonator-heater. The investigation produced the interesting result that because of the whirling in the combustion chamber a complete combustion was achieved in a relatively short burner length.

By taking away the resonator exhaust tube and regulation, a purely compressed air burner operation resulted with satisfactory combustion. The resonator ran as a combustion chamber. The combustion continued up to air excess coefficient of $\lambda = 1.8$.

Further investigations with an Argus engine of the type shown in Figure 18, with a flow valve of the type shown in Figure 57, was carried out by Klanke, DFS 1940/41. He succeeded in bringing about resonator operation with the aid of the ejector effect of the injected fuel of this engine which had functioned before only as a non-resonator. The thrust obtained was very low.

At the Institut Kamm, Stuttgart, self-charging resonator operation was achieved with a combustion chamber form similar to that of Marconnet (Fig. 6). Following the proposals of Eisele, they succeeded in stimulating resonator combustion with a pear-shaped combustion chamber without valves. Later, an exit tube was installed which extraordinarily stabilized the resonator operation.

A pure flow valve, whose simplicity cannot be surpassed, is incorporated into the Rheinst device of Figure 13. The gas exchange process takes place through a single port. The flow-valve operation that this port depends on is similar to that of the Borda mouthpiece. As is shown in Figure 12, a whirling takes place in the interior of the pot, which gives the exhaust flow a favorable direction.

With the flow valve there occurs the noteworthy phenomenon that the flow is connected with moving pressure waves. Since a sudden valve closing does not take place, a very low pressure amplitude and mean pressure is obtained. This results in less thrust and small jet velocities.

Controlled Valves

The opening and closing of the automatic valves is accomplished by the effective difference of pressure on the spring flaps. The flap motion, however, lags behind the resonator pressure diagram. Accordingly, an intake loss takes place similar to the slow sliding motion of steam engines known as "wire-drawing."

The intake loss can be diminished with a controlled valve, which possesses a precisely fixed opening curve. With the automatic valve the adjustment of the valve cross section depends on the explosion time. With the controlled valve the impulse of the control has to be regulated so that opening time of the inlet valve is tuned with the resonator. If this is not the case, it is possible under certain circumstances (when the ignition functions) that the engine suddenly achieves rhythmic explosions whose frequency is higher or lower than the natural frequency. It runs then in non-resonator operation.

Resonator operation with a controlled valve allows an exact adjustment of the valve opening frequency to the acoustic natural frequency of the engine. Such an engine will be useful for mass production when in addition to the solution of the problems of the automatically operating aero-resonator, the question of the valve-impulse and the problem of the automatic frequency regulation is satisfactorily solved.

The latter problem has not yet been worked out. First test-stand measurements were carried out with a laboratory solution of the valve-impulse and frequency regulation. The following has been already determined:

A controlled optimum-valve is superior to an automatic optimum-valve with reference to maximum obtainable thrust and fuel consumption.

The question whether the greater expenditure of construction material and the complication and expensiveness of such engines is balanced by the total economy caused by the raising of the thermodynamic efficiency cannot be solved by general speculation, but only for the special case of individual projects.

The controlled valves can be arranged into two main groups:

(A) Valves with reciprocating motion,

(B) Valves with rotary motion.

(A) Reciprocating motion.

Venetian-Blind Valves. A typical controlled Venetian-blind valve has already been shown in Figure 3. The DFS group (Schaefer) built a rhythmic controlled valve (Venetian-blind valve), which was investigated by Eisele. (Report No. 436, Forschungsinstitut Stuttgart, Untersuchungen an einem gesteuert arbeitenden Strahbrohr).

The essentials of the method of construction are shown in Figure 49. The valve consisted of a lattice with good profiles, whose narrow cross section could be closed with flaps, which swing out of the profile supports. The swinging motion is synchronized with gears. The valve impulse is caused by a speed-regulated electric motor. The entire frequency range can be obtained by varying the speed of the electric motor.

The experimental results with this valve were very favorable. For example, the specific fuel consumption amounted to only 75% of that of the aero-resonator fitted with the automatic valve flaps.

The application of the controlled Venetian-blind valve to resonator combustion with higher frequency has a limitation somewhat similar to that on the automatic flat-valve design.

Controlled Sliding Valve with Reciprocating Motion. All known types of sliding-valve designs, such as flat sliding valves, sleeve valves, and piston valves, theoretically can be used to control the gas exchange process of resonator devices. The limit of their usefulness is the large acceleration force required as a result of their large mass and operating frequency.

Every project with the aim of increasing the mean effective pressure of the resonator starts out with a constructive design with sliding-valve construction, which is more or less assimilated from reciprocating airplane engines.

(B) Valves with Rotary Motion.

The close limits of operating frequency for which valves of the reciprocating type must be set need not be held by the rotating valve, and this type is therefore well suited to use with resonators at high operating frequencies, to increase the mean effective pressure and obtain endurance. Several typical designs have already been shown in Figures 1, 4, and 8.

The Argus firm has been concerned with the solution of the valve problem through rotating valves since 1941. First, the simplest rotating valve element, the rotating flap, was investigated by the author in combination with the typical Argus resonator. The simple model shown in Figure 58 was successfully run with nozzle-spoiler mixture formation in resonator and non-resonator operation, but only with the aid of air blowing. Operation with self-charging was not possible. The model engine had a length of about 1500 millimeters (4.95 feet).

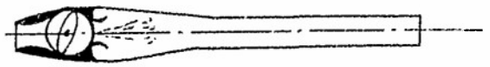

Fig. 58 AERO-Resonator with simple rotary flap

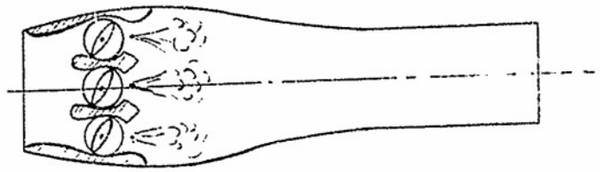

Fig. 59 AERO-Resonator with multiple rotary flaps

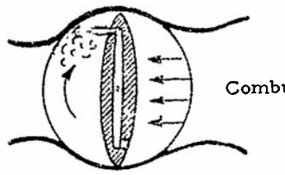

Fig. 60 Scheme of an automatically rotating - rotary flap

GOSSLAU/ARGUS AERO-Resonators with Rotary Flap Valves

These projects, shown in Figures 59 and 60, were made in addition to flap-valve development which followed. The Argus experiments with rotating flap valves (1941) showed a pronounced field of resonance for a tuned range of speed of rotation. The investigation was carried out so that at first the engine operated cold with compressed air, the thrusts being measured for various compressed air pressures. The absolute useful thrust decreased with increasing speed of rotation, which was expected as a result of the growth of friction losses. The engine operating with combustion also showed that the absolute value of the useful thrust was less for the higher resonating range.

Multi-Rotating Flap Valves were projected for the larger aero-resonator by Argus and by Hoffmann[1] (Fig. 58).

Several interesting proposals were put forth with reference to automatic driving of the rotating flap. The principle of the automatic rotating flap is shown in Figure 60. The flap was fitted with specially bored holes. The highpressure gases flow out of the combustion chamber through these holes and pass out tangential to the periphery. The resulting pressure impulse drives the flap around in a manner similar to the Segner waterwheel. One such arrangement was built and operated by the Argus firm.

In spite of these elegant solutions of the driving of the rotating flap, the operational difficulties were considerable. The adjustment of the speed of rotation to the operating time of the resonator, and the flow conditions caused by the rotation, as well as lubrication, present technical problems which still require much engineering before a decision can be made as to the usefulness of the rotating-flap type of construction.

Summary

Automatic Valves. Automatically operating spring flap valves are at present best suited for the aero-resonator. The present state of the technique, as typified by the Argus flat valve of Figure 40, still leaves much room for improvement. The first experiments with indented flap valves improved the thrust more than 15%. The full development of the indented flap valve is needed by the aero-resonator in order to increase the thrust and reduce the cost.

[1] Hoffmann of DFS at Darmstadt worked on the problem of rotating valves in connection with his investigation of the use of detonative combustion for the jet impulse.

Flow valves, whose operation is based on a varying resistance depending on the flow direction, produced lower jet velocities. They are however of unsurpassed simplicity and are of use in applications where endurance and low useful thrust are important.

Controlled Valves. Controlled Venetian-blind valves bring about an optimum increase of work of the aero-resonator. The questions of driving impulse and regulation are still unsolved problems. Rotating valve systems offer theoretically maximum opening frequencies. They are of importance for resonators with higher operating frequencies. The experiments carried out up to the present have been simply functional tests. The driving and regulating problems of the rotating systems have not yet been solved.

CHAPTER IV

Resonator Tube Shapes

General Basic Requirements

The fundamental requirements of the external shape of the resonator can be summarized as follows:

1. Correct thermodynamic shape of the combustion chamber,
2. Aerodynamically practical external shape,
3. Structural strength and light weight.

The free-flying aero-resonator must be constructed so that it satisfies both the internal thermodynamic combustion conditions and the optimum aerodynamic requirements of high-speed flight. A compromise solution is needed to fulfill both of these goals in a single resonator outer skin. Every flying engine should be constructed and developed so that it will have the smallest weight with the highest possible efficiency. These aims are also valid for the aero-resonator, and mean that the total surface must be as small as possible and the wall thickness as thin as possible. The tube must also have a sufficient rigidity during operation, and must not lose its shape under the influence of the working temperature. The wall temperature amounts to about 600°C (1112°F); the tube operates red-hot. Accordingly, the rigidity of the outer sheath is reduced and must not be subject to other forces. Good support and vibration-free construction are further conditions which must be considered.

Origins of Resonator Shapes

In Figure 61 are represented tube shapes (1), (2), and (3), which can produce somewhat the same static thrust. In order to demonstrate a sensibly practical differentiation of the basic tube forms. the degree of slenderness or the relation between length and the average diameter is made approximately equal in all types.

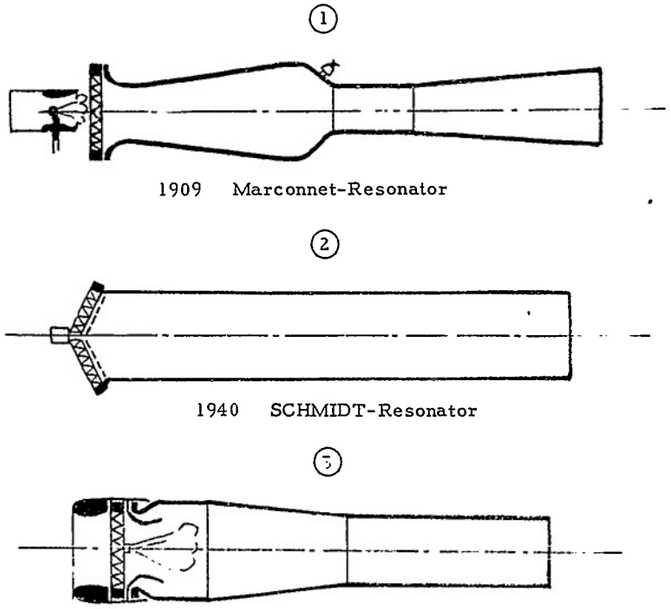

Fig. 61 Evolution of Tube - Forms

Marconnet Shape. The Marconnet shape (Figure 61 (1)) has still not been investigated so much as the V-1 engine. Based on the experimental measurements at the Kamm Institut on small model tubes and at Argus the type of combustion chamber indicated in Figure 17, it can be said with assurance that the Marconnet shape has excellent thermodynamic properties and rigidity.

Because of bad external aerodynamic properties, this type of structure is not suited to the free-flying resonator. At the Kamm Institut, tube shapes similar to that of Marconnet had been investigated during 1944. Figure 63 shows a design of that form. The degree of slenderness is essentially greater than that of the V-1 engine.

As far as the rigidity of shape is concerned, the Marconnet form can be designated as most favorable, since the different diameters of the combustion chamber, the cylindrical neck and the conical exhaust tube, cause a stiffening of the whole structure.

Schmidt Shape. In Figure 61 (2) is shown the original Schmidt shape, which is characterized by a smooth cylinder, or by a conical tube slightly widening towards the exhaust end. This type of design had unstable thermodynamic engine properties which resulted not only from the external tube shape but also from the Schmidt type of mixture formation.

The aerodynamic properties of the original Schmidt shape were unsatisfactory. Wind tunnel measurements at LFA, Braunschweig, (Zobel), show a large decrease of thrust even at very low tunnel velocities. The conical Schmidt valve was not satisfactory for the air-intake at high velocities. It did not succeed in improving the thrust behavior at high velocity nor in attaining stable operating properties. As the test runs at the Argus factory and at LFA, Braunschweig, showed, the rigidity requirements of the tubes were not satisfied, particularly at the junction between the valve and the tube. Later investigations at Peenemunde with highly loaded Argus-Aero-Resonators showed that the rigidity of shape of a smooth cylindrical tube with the same wall thickness is less than that of a tube with varying diameter. A cylindrical tube vibrates less. The greater the amplitude of vibration of the metal sheath the more easily are vibration-fractures developed.

Argus Shape. The shape developed by the author at the Argus factory is the end product of a long number of systematically investigated tube variations. The Argus shape is characterized by a conical combustion chamber which is connected to a cylindrical exhaust tube.

An inlet nose designed according to the best views on streamlining completed the Argus-resonator, making it a body with low drag. This shape, Figure 61 (3) was described in the basic patent of the author in 1941 (A93 713). Later gas dynamic calculations of Schulz-Grunow proved the superiority of that shape of tube. The basic shape has, up to the present, been only unessentially modified. These facts prove that perhaps already the optimum compromise between the three requirements (good thermodynamics, good aerodynamics, good rigidity of shape) has been found. A sufficient rigidity of form with a completely smooth outer sheath was attained using heat resistant Sicromal sheet metal, with wall thicknesses of 2.5 - 3.0 mm.

The increase of the rigidity of the Argus resonator by means of impressed transverse indentations was investigated in 1942-1943 (Figure 65). An effect on the internal thermodynamics could not be measured since the static thrust and the fuel consumption were not changed. The Braunschweig wind tunnel measurements (Zobel) showed that this method is unsuited for high flight velocity.

Longitudinal indentations might be more effective. This proposal had been made by Zobel and others.

Pot Shapes. If one thinks of the exhaust end of an explosion resonator as being extremely short, then one gets the parent type of the pure combustion chamber. These pot-shapes (Figures 62 (1), (2), and (3)) are not suitable for use as aircraft engines; therefore, they are not applicable as aero-resonators and are here simply differentiated according to the method by which the combustion air is introduced.

(1) The explosion resonator combustion chamber with reversed flow,
(2) The explosion resonator combustion chamber with straight flow.

Resonator Explosion Chambers with Reversed Flow. The Rheinst Resonator Combustion Chamber (Figure 62-(1)) is a typical shape with reversed flow. The process of gas exchange takes place through a single opening. That this combustion chamber

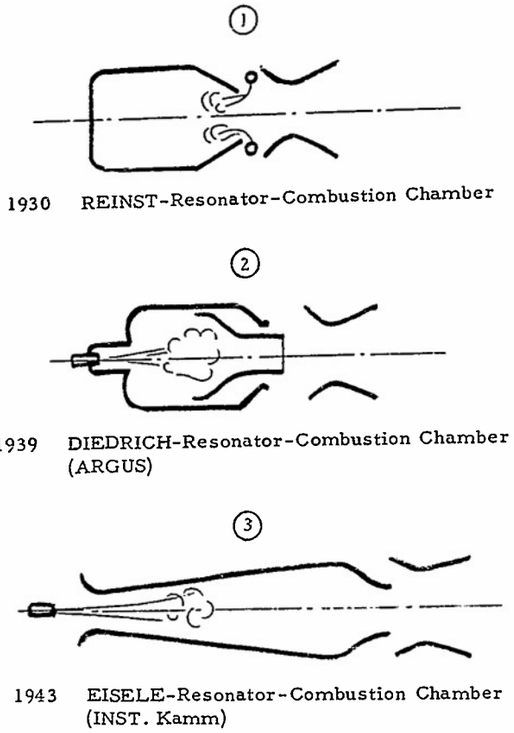

Fig. 62 Evolution of Combustion Chamber Forms

is capable of working with an external mixture formation has been already demonstrated at the engine laboratory of the Technischen Hochschule Dresden.

The Diedrich Resonator Combustion Chamber (Figure 62-(2)) had an internal mixture formation. The air comes in through a circular slit in the combustion chamber wall at the junction between a bell-shaped insert and the exhaust nozzle. Here the entering flow was turned 180°. Although the Rheinst combustion chamber operated with self-charging, the author did not succeed in 1939 in attaining a self-charging operation. Resonating explosions were then obtained only when air of slight overpressure was blown in. When this combustion chamber was operated with compressed air of 1 atmosphere excess pressure, it would act as a constant-pressure combustion chamber similar to a gas-turbine combustion chamber.

Resonator Explosion Chambers with Straight Air Flow.

Eisle Resonator Combustion Chamber (Figure 62 (3) . The resonator explosion combustion chamber having separated intake and exhaust, which was constructed at the Institut FKFS-Stuttgart under the stimulus of Eisele, can be pointed out as a straight-flow explosion chamber. In view of its flow direction, it resembles the non-resonator Holzworth combustion chamber (Figure 2). To this direct flow resonator explosion chamber, which proved to be capable of self-charging operation, an exhaust tube was later connected. This essentially improved the operating characteristics. The shape arrived at was similar to that of Marconnet (Figure 61 (1)). In summary, it can be stated that operation characteristics of either straight or reversed flow resonator combustion chambers are not very stable. Starting is difficult, since large disturbances are caused by small changes in the mixture or the temperature. The operating characteristics were improved by a properly placed expulsion tube. With this they become resonating tubes.

Special Resonator Tube Shapes

Hooded Explosion Resonators. In Figure 66 is shown a proposal of the author of 1941, which combined the ideas of longitudinal indentations and the cooling hoods. This design could be used with the resonator or engine built into the fuselage, especially in designs where the resonator is itself a part of the fuselage, where it must be separated from the tail surfaces.

One of the first functional investigations was made in 1941 using a thin cooling hood over the exhaust end. It was shown that the tube automatically sucked cooling air through the concentrically placed hood. This fact is especially favorable during take-off and accelerating flight conditions, where a large thrust capacity is attained with low exhaust velocities. This first research on cooling hoods was the stimulus for the broader idea of the combined aero-resonator-Lorin engine (Figure 25), in which after-burning of the warmed cooling air is provided for.

The investigation of the installation problem was actually started when the project of the interceptor resonator was pursued. The work on this project was done by the Junkers firm and at the Kamm Institut with the cooperation of the Graf Zeppelin Institute of Research. At the Kamm Institut some cooling hood investigations were performed on the FKFS-model tubes of Marconnet design (Figure63), and the prob-

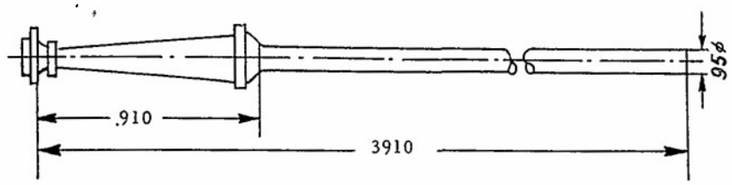

Fig. 63 Inst. KAMM: Resonator of Marconnet-Design

lem of the unhooded double tubes was worked on. In these investigations the suction effect of the exhaust end was not used for acceleration of the cooling air. This project was handled simply as a preliminary basic research on model tubes. Figure 64 shows a resonator similar to the Marconnet shape placed in a streamlined body. The

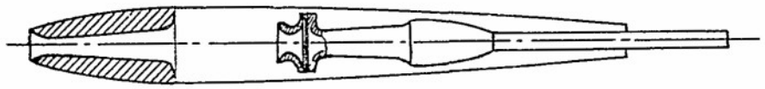

Fig. 64 Inst. KAMM: Enclosed resonator with compression chamber forward of inlet valve

remarkable thing concerning this design is the size of the settling chamber lying in front of the intake valve. The flow passed into this settling chamber from an inlet diffuser. It was hoped that an increase of thrust would be attained with a simultaneous improvement of the external aerodynamics. The entering air velocity through the streamlined body should have a valve as small as required by the cooling relations of the outer hood of the resonator, if the smallest flight resistance is to be achieved.

This settling chamber method is not yet fully evaluated, since the total surface area of the flying system must be greatly increased. Although the form resistance is reduced, the surface resistance still increases in an un-permissible manner. Another question is the influence of the size of the settling chamber upon the operating properties of the resonator. It has been possible to run smaller resonators with relatively large settling chambers. However, the Argus resonator of the V-1 design, which was joined to settling chambers of varying shape and dimensions, could not be made to run on the Ainring test stands.

The intake problem of the hooded out-of-phase operating double resonator has also not been sufficiently investigated. In this case also the amount of space before the suction-valve influences the operation. The hoods of the double resonator can be

made into very different forms, depending on the designed arrangement. What is valid for the intake-problem of the double tube has also a certain meaning for the exhaust end. Here there is a mutual effect due to the counter phase operation. This affects the exhaust end air augmentation and after-suction effect.

In connection with the hooded type of resonator, it is well to point out the vertical operating water-cooled resonator of Figure 29.

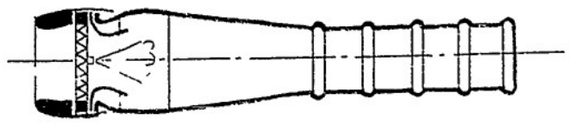

Fig. 65

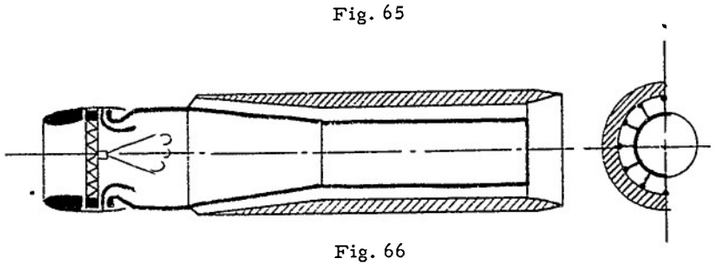

Fig. 66

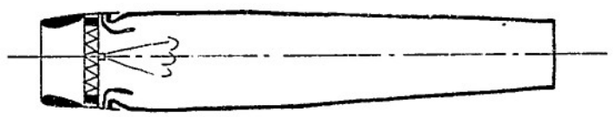

Fig. 67

Tube Shape Variants of ARGUS AERO-Resonators

A special type of design in which the after-suction effect of exhaust is extremely necessary is the Karcher heater. This device is used to supply large quantities of air at a moderate temperature. Therefore, the exhaust end was designed as an ejector, or mixing nozzle (Figure 14b).

Optimum Streamlined Bodies. The form of the aero-resonator was investigated by the Argus firm in 1941-1942, to determine the optimum streamlined body with reference to a shape of combustion chamber demanded by thermodynamics (Figure 67). The result was negative. The resonator could not be made to operate. From the investigation it appeared that cylindrical exhaust end of a certain length is necessary in order to obtain a stable resonator operation. This empirically found result was confirmed in 1943 by the gas dynamical calculations of Schulz-Grunow.

Variations of the Exhaust End. Figures 68, 69, 70, and 71 show variations in tube shape of the Argus resonator which gave an increase in the air augmentation through the exhaust. The static thrust of the engine of Figure 68 was increased by 15 to 20%. Flight investigations of the Argus firm in 1944 demonstrated the decreasing of the thrust increase with increasing flight velocities. A reversal occurred at about 400 km

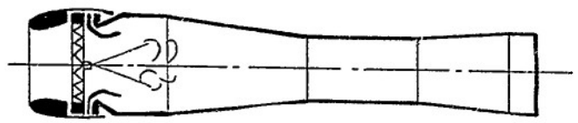

Fig. 68

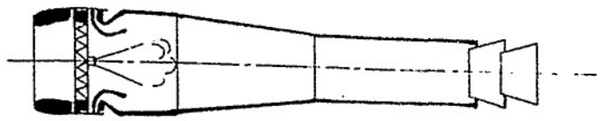

Fig. 69

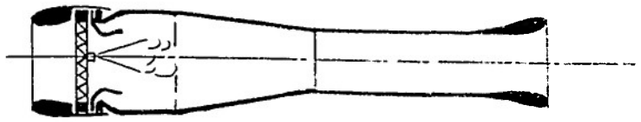

Fig. 70

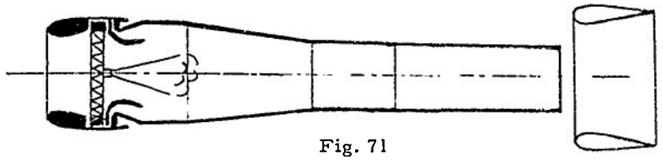

Fig. 71

Tube Form Variants of ARGUS-Resonators

per hour (249 mph), so that a drag resulted at higher velocities. These facts held even for extreme tube extensions. The tuning of the optimum tube-length is therefore not simple, and stand and flight investigations are of equal importance in making an evaluation.

The multiple diffusers, placed as shown in Figure 69, should improve the sucking effect through the open end of the tube. (The author suggested that the more cold air present in the cylinder, the greater the mass transferred in the expulsion process, which again means a better filling.) The result was only an insignificant increase in thrust. The diffusers which were placed inside the exhaust were badly cooled, glowed white in operation, and hence lost their shape. An increased static thrust is also to be expected from the arrangement of Figure 71. Exact measurements of the increase of thrust of the Argus resonator with a hooded nozzle have still not been made. Zobel, LFA, measured the increase of static thrust of a hooded powder rocket. As proposed by Eisele and investigated by him in 1944 at Airwing (Fig. 70), a rounding off of the exhaust end exerted no effect in increasing the thrust.

Inlet Noses. The shape and lay-out of the inlet nose is determined by both the external aerodynamics and the operation of the internal combustion process. In 1941, a simple sheet metal nose was investigated at the Argus factory in stationary operation. Figure 72 shows the first design, which was especially short with a large inlet area ratio. It was then established that the inlet-nose causes a diminishing of the static thrust, no matter what the shape. Noses with a small entrance diameter were very unsatisfactory. These caused a strong throttling of the inlet flow and therefore damaged the filling process.

Various Nose Forms

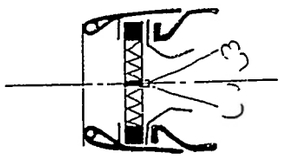

Fig. 72

DIEDRICH/ (1941) /ARGUS Short Nose

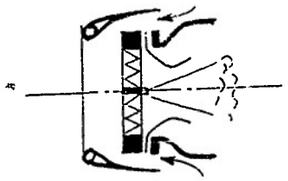

Fig. 73

DIEDRICH/ (1941) /ARGUS Townend-Ring

A gapped-nose (Fig. 73) similar to a "Towend ring" was investigated in 1941 on the test stand, and it was shown that because of the low pressure in front of the valve, air was even sucked in backwards through the rear gap.

During the first flight investigations with inlet noses, resonator operation was not achieved. The basic reason was the bad air-flow conditions resulting from supporting the engine under the fuselage of the airplane (Fig. 22).

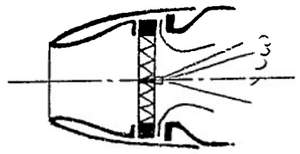

Fig. 74

RUDEN: Collector Diffuser (1943)

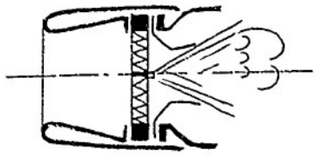

Fig. 75

KUCHEMANN: Inlet Diffuser (1943)

Later, the wind tunnel investigations of Zobel at Braunschweig (1942-1943) indicated that a hood improved the effective thrust of the resonator under all conditions at high flight velocities. According to the experimental results of Zobel, with given inlet area ratio, the choice of a special hood-shape is of smaller importance. In particular, the collector-diffusers of Ruden (Fig. 74) and the inlet-diffusers of Kuchemann (Fig. 75) were investigated. Also the idea of a gapped-hood was again worked on. The end effect of the series of attempts was that the inlet-diffuser of Kuchemann (Fig. 75, Fig. 77) was chosen.

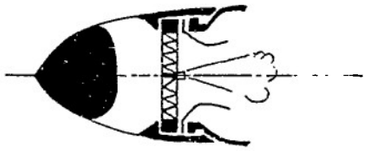

Fig. 76 SCHULZ-GRUNOW: Cap (1944)

In 1944 Schulz-Grunow proposed a solution divergent from the customary theories of hoods. The cap connected to the valve had a circular slot at which atmospheric pressure prevailed regardless of the flight velocity of the aero-resonator. With this, Schulz-Grunow intended to diminish the effect of the ram-pressure in front of the valves and travel of the flame-front towards the exhaust end. Then the combustion process at flight velocities would be the same as on the test stand.

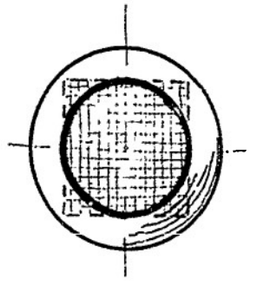

Fig. 77

1943 KUCHEMANN: Circular Air Inlet

Valve corners badly wetted

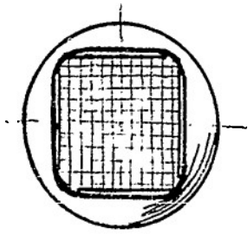

Fig. 78

1944 DIEDRICH: Rectangular Air Inlet

Valve corners well wetted

According to the previous experience, a resonator with such a cap could scarcely be made to run. The stability is strongly dependent on flow conditions in front of the valve, as was shown during the investigations on the settling chambers.

An opposite approach was made by the author in 1944-45. In order to attain better air-filling, the circular entrance of Kuchemann's inlet-diffuser (Fig. 77) was made over into a rectangular inlet (Fig. 78). It had been shown that the corners of the valves were badly wetted by the air entering the nose shown in Figure 77.

The author wished to achieve a more uniform flow through the entire valve, that is, the total possible flight ram without losses should be transferred to the combustion chamber.

Ruden utilized these ideas in developing a new nose (Fig. 79). This nose again had a circular air entrance and had favorable in-flow characteristics in connection with the new valve (Fig. 45). Ruden's new nose represented the modern aerodynamically

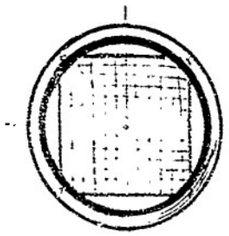

Fig. 79 1945 RUDEN: Circular Cross Section with large opening proportions

Valve corners well wetted.

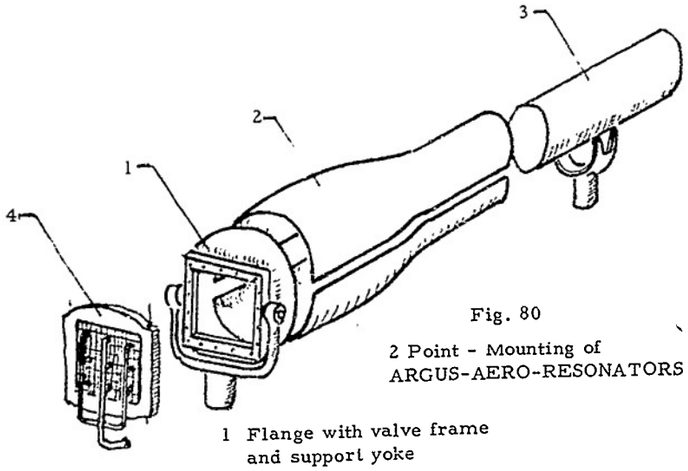

Fig. 80

2 Point - Mounting of ARGUS-AERO-RESONATORS

1 Flange with valve frame and support yoke

2 Combustion chamber made of 2 half-shells.

3 Cylindrical exhaust tube with rear support point (twin-butt-straps)

4 Valve with fuel nozzles and spoiler nozzle

refined form of the first Argus hood of 1941 (Fig. 72). The first fundamental law for flow, which is everywhere valid in aerodynamics, is also here the most important, namely: "To provide everywhere possible convergent flow conditions and continuous transitions."

Arrangement and Support of the Aero-Resonator. Since the periodic operation of the explosion resonator causes concussions, careful arrangement and vibration damping are necessary. Figure 80 shows in a perspective diagram the structure of the individual parts of the tube and the two-point support of the Argus resonator. In front of the valve flange, where the temperature is the least, the force of the thrust is taken up by two pins, which are placed in a force absorbing yoke. In the flying bomb the connection between these pins and the yoke is made elastic by a rubber support, which effects a dampening of concussion at this point.

Difficulties were encountered in the rear support. The tube expands under the influence of heat and hence the rear point of support shifts its position. Also the diameter of the exhaust tube changes under the influence of heat. Since the temperature of the rear metal support-yoke is smaller than that of the tube, tensile strains originate at the point of welding, and because the uncontrollable type of vibration of the whole surface due to the changing pressure forces, fatigue fractures soon take place. By the introduction of twin butt straps (Zwillingslasche), the fatigue fractures of the welded point of support were eliminated. In Figure 80 one may see the form of the last support.

Special attention must be given to the support of resonators in test stands. Here, the average thrust will usually be measured, and the force-pulsations must therefore be integrated. One needs a spring whose natural mechanical frequency is so small compared to the operating frequency of the explosion-resonator that it cannot follow the thrust pulsations. The natural vibration period is proportional to the square root of the mass and inversely proportional to the square root of the spring constant:

$$\tau = 2\sqrt{M/K}$$

where:

τ = natural vibration period

M = mass of the tube

K = spring constant

One can now make the mass larger (Fig. 32), as has been done at Ainring, or use a weaker spring. Concerning the support of the resonator in an airplane, a weaker spring is recommended (smaller K). A long support is therefore desirable. How these proposals fit into the requirements of the location of the center of gravity of the airplane depends each time on the project at hand.

SUMMARY

The best external shape of the aero-resonator is a compromise between the optimum thermodynamical requirements of combustion at the inside of the tube, the most favorable aerodynamical, external shape, and the shape and heat-rigidity of the materials of the tube itself.

In the Argus resonator of the flying bomb this compromise was resolved most satisfactorily. Its external shape was only unessentially changed between 1941-1945.

The various intended uses of the resonator explosion process allow the designer a wide latitude. There are the pot and tube types. With the latter one may vary the ratio of length to average diameter in the order of magnitude of 5:1 to 200:1 and more.

CHAPTER V

Mixture Formation Basic Requirements and Basic Types

The uniformity of the resonator explosions depends more on the mixture formation and the ignition kinematics than on the external structure of the tube and the construction of the inlet valves. The high ignition-frequency and the large volumes of mixture to be ignited place stringent requirements on the uniformity and homogeneity of the mixture.

There are already available several vapor and mixture regulating mechanisms which, when suitably reconstructed, are capable of solving the mixture-formation problem. But these do not fulfill the fundamental requirements of greater simplicity, reasonableness of cost, and freedom from attention.

Since the V-1 aero-resonator was to be a mass-production expendable engine, the technical cost for fuel-atomization, fuel flow, and fuel regulation could not be large. On the other hand, the thermodynamic efficiency of a combustion resonator could be increased only with a corresponding expenditure on component parts for the mixture formation. It follows that a difficult compromise must be made between the construction requirements and the expenditure of construction material for higher efficiency on one hand as compared to the necessity of cheaper mass-production on the other hand.

Up to February 1941 there existed no mixture formation equipment for liquid fuel which might solve this problem. The discovery of spoiler-nozzle mixture formation was the key to success, and it brought to maturity the development of the V-1 aero-resonator. Later, during 1943-1944, in the development of the so-called resonator-blower-heater, the mixture formation requirements were not so extreme. Although the transformation of the chemical energy of the fuel into the heat content of the jet gases should be carried out as completely as possible, it was not too important to obtain a high useful thrust from the exhaust gases. Simplicity, economy, and freedom from attention were certainly achieved here. Liquid fuels were also predominantly used in the RESONATOR HEATER and BLOWER. In many special cases, gas and powder fuels can be used.

In general there are three fundamental requirements for all resonator mixture formation equipment:

(1) Good refining and uniform mixture distribution in the combustion space,
(2) Assured starting conditions and good regulation,
(3) Small mechanical expenditure for the fuel requirements, fuel atomization, and unconditional certainty of operation.

These fundamental requirements can be fulfilled in various ways. One may allow the mixture formation to go intermittently or to proceed in a continuous operation. Furthermore, another distinction is clear when the mixture is formed in front of the inlet to the combustion chamber, in which case it is called an "external mixture formation", or when it is first formed on the inside of the combustion space, in which case it can be characterized as an "internal mixture formation". Corresponding to this, we have the following fundamental types of mixture formation:

Type A - Intermittent mixture formation (1) External (2) Internal

Type B - Continuous mixture formation (1) External (2) Internal

Since the beginning of the work on resonator development, the author had decided on the continuous internal mixture formation of Fa Argus, which has already been indicated in Figures 17, 18, 19, and 20. This development led to the Main- Process Patent, (Secret Patent A 93713) of 1941, which was introduced by the Argus firm into series-production.

Out of the patent proposal of Marconnet (Fig. 6), Caravodine (Fig. 9), etc., there arose several different ideas concerning the mixture-formation problem which, for example, have determined the development of the external continuous and the external intermittent mixture formation process.

The views of P. Schmidt of Munich are interesting. They are written in the "Abschlmssbericht of LHG in September 1939, (p. 6). A danger of interruption of

operation occurs when the flow of fuel does not follow the variations of the intermittent combustion so that a timed regulated addition of combustion material is provided.

It can be inferred from the publication that Schmidt did not establish operation with a continuous internal method of injection. He also announced that this method seemed hopeless, since the flow of continuously injected fuel cannot be sufficiently adjusted to the quickly varying quantities of air, and hence an inflow of fuel takes place during combustion. The development work of the P. Schmidt firm of Munich was therefore on an internal intermittent mixture formation process.

The mixture formation problem, which can be handled in gasoline engines more or less outside the combustion chamber, is directly dependent on the configuration of the combustion space in a resonator engine, and is therefore an independent problem.

The mixture charging inside the combustion chamber and the mixture inflow velocity are the fundamental quantities which, according to all the previously mentioned types of mixture formation, must influence the resonator explosion operation. In the discussion of the individual types of mixture formation it is assumed that the requirements that exist for all types are those that are stated in the spoiler-nozzle patents. These conditions are also assumed to apply for mixture formation equipment for liquid, vapor, and powder fuels.

The special theory of the spoiler-nozzle mixture formation concerning the mutual dependence of the entering air velocity and the ignition velocity will be treated later.

Mixture Formation Equipment for Liquid Fuels

A. Intermittent Mixture Formation	(1) External (2) Internal
B. Continuous Mixture Formation	(1) External (2) Internal

Type A usually corresponds, in the internal combustion engine design, to the carburetor and injection-mixture formation. In Type B-1 one finds a parallel in the form of the collector-injection in the intake manifold. The fourth type of phenomena of the continuous internal mixture formation has no parallel in the internal combustion engine.

In Figure 81 three of the four above-named fundamental types of mixture formation are shown for liquid fuels.

Type A. Intermittent External Mixture Formation. In Figure 81-1 is shown a carburetor which was designed by Marconnet or Caravodine and is designated today as an intermittently operating external vacuum mixture formation.

The Argus factory (Gosslau) tried to attain resonator operation with a normal SUM-register-carburetor with the apparatus of Figure 18. This investigation failed.

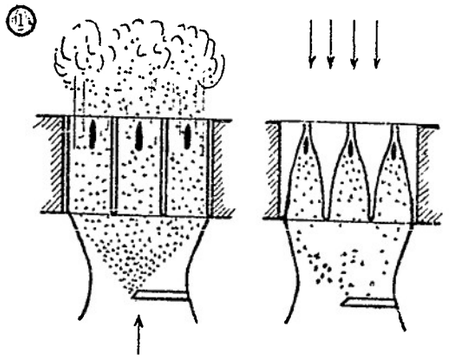

Caravodine and Marconnet (1910)
Carburetor-Venturi

Intermittant extreme vacuum mixture formation

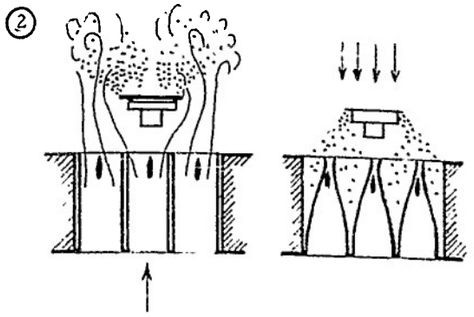

P. Schmidt (1940)
Vortex-Plate-Atomizer

Intermittant internal vacuum mixture formation

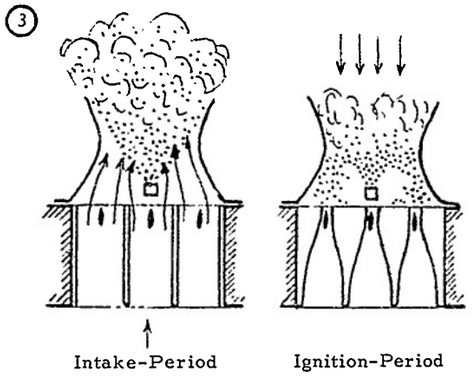

Diedrich/Argus (1941)

Twisting atomizer

Steady internal high pressure mixture formation

Fig. 81

At the Forschungsinstitut fur Kraftfahrtwesen a resonator model was successfully operated using external carburetor mixture formation. The reason the Argus firm failed in 1940 and why the Stuttgart Institut succeeded in 1944 can be explained by the theory of the jet-mixture formation process. This will be discussed later. The state of technique which must exist in order that the intermittent external mixture formation could be made to function successfully was not at hand in 1940, although, Caravodine as early as 1910 had attained resonator-operation without a special spoiler nozzle.

The principle of intermittent external mixture formation is applied today with success in the Karcher-resonator-jet (Fig. 24). With this process of mixture formation a stable resonator operation was achieved. A fundamental requirement for this is of course that definite dimensions exist for the inlet cross section of the combustion chamber.

The advantage of intermittent external mixture formation following the carburetor principle is that the combustion material need not be placed under pressure. A gravity tank is sufficient. Hence a fuel-pressure tank is not needed and the output requirements of the auxiliary equipment are less. Point 3 of the initially mentioned fundamental requirements is therefore met.

Conditions 1 and 2, namely a good mixture preparation and uniform homogeneous fuel provision in the combustion chamber, together with more certain starting conditions and good capacity regulation, are not to be attained by just a simple carburetor design. In addition the usual supplementary starting and no-load running venturi construction is required in the carburetor design.

Up to now, carburetor-resonator mixture formation has been carried out only for the smaller types. Here one carburetor venturi was used. Aero-resonators of the size of the V-1 engine must be supplied with more venturi nozzles. This would cause a reduction of inlet cross-section which would increase the flow losses, thus reducing the filling with fresh air, and hence diminishing the resonator efficiency.

A fundamental disadvantage of an external mixture formation is the risk of fire in the carburetor and the melting of the valve-flaps and cross-bars. In particular, when some flaps are damaged, jets of flame would shoot through the valve, and an immediate destruction of the whole valve would take place.

Type A-2. Intermittent Internal Mixture Formation. Figure 81-2 shows the original Schmidt intermittent mixture formation of 1940. Figures 83 and 84 show different construction possibilities or realizations of the intermittent atomizer with and without vortex plates. It is shown how the air vortices behind the plate cause a complete mixing of air and fuel.

Figure 82 shows a sliding casing design. The spring-loaded casing keeps the fuel exit closed. The vacuum in the combustion chamber causes a motion of the casing in the direction of the arrow, this being accompanied by the uncovering of the fuel exit orifice.

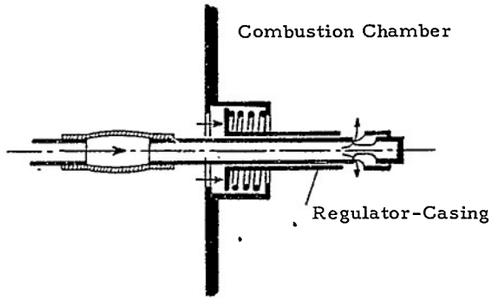

Fig. 82 P. Schmidt: 1940 Proposal of an intermittant high pressure-fuel-injector

Another idea of Schmidt is based on the development of elasticity in the fuel feed system. Figures 82 and 83 show how pulsations timed to the explosions are set up in the fuel flow through the use of rubber sleeves and membranes. As in the hydraulic ram, the fuel column is forced into harmonious vibration thereby, causing an intermittent flow of fuel.

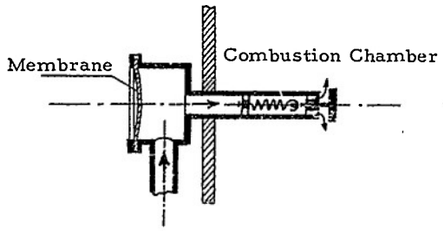

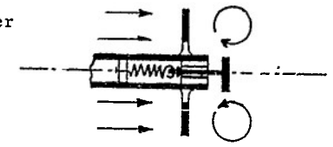

Fig. 83 a) without vortex-plate atomizer

Fig. 84 b) with vortex-plate atomizer

P. Schmidt: 1940 Proposal of a intermittant vacuum fuel injector

The main object of the Schmidt regulator was to cut off completely the outflow of the fuel during the ignition period. The regulator was about the size of a nickel coin. For the Schmidt resonator "500" about 150 to 175 regulators were required. The vortex plate atomizer with a cover plate fuel cut-off was simplified in the course of development and their number of regulators was reduced.

Figure 85 shows the last model of the Schmidt atomizer. Instead of the moving cover plate a fixed vortex plate rim bored with many fine holes, was provided. The cavity area of the atomizer was stuffed with brass wire gauze. The fuel enters through the small upper tube, is broken up by large surface of the wire gauze and is forced by the suction of the vacuum effect to the edge of the vortex plate, where the effect of ram pressure forces it into the combustion chamber in a finely atomized

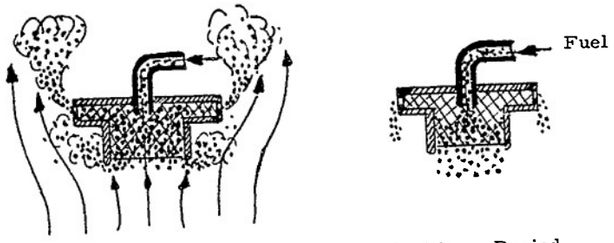

Intake - Period Ignition - Period

Fig. 85 Manner of operation of the Schmidt-Atomizer in vertical position

Residue drops of fuel distribute themselves uniformly over the inlet-valve

state. Tests on the Schmidt resonator were carried out in 1943 in the Braunschweig wind tunnel and on the test stands of the Argus plant. It was shown that the Schmidt atomizer design did not fulfill the previously formulated requirements. A good mixture preparation is obtained during intake, since the fresh air, shooting behind the edge of the vortex plate, produces an intensive atomization and mixing. As soon as the valve flaps close, the fuel trickles back and flows diagonally downward, because of the horizontal position of the resonator, to the deepest point (Fig. 86). The newly

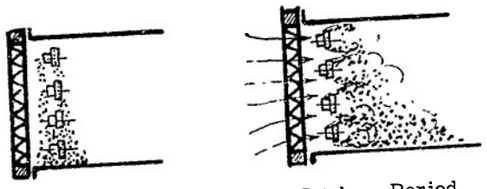

Ignition - Period Intake - Period

Fig. 86 Manner of operation of the Schmidt-Atomizer in horizontal tube position

Residue drops of fuel cause a non-uniform mixture distribution

entering fresh air again carries away these later-formed drops of fuel to the combustion chamber. In this horizontal position a non-uniform mixture distribution is obtained throughout the entire cross-section. The result of this is that the tube operates favorably only in the vertical position, since here the fuel is uniformly divided over the valve cross-section and hence is uniformly carried away by the incoming flow to the combustion chamber.

It was proven that the consumption and thrust efficiency of the Model "500" Schmidt Resonator (Fig. 28, Fig. 61-2) was better in the vertical position than in the horizontal position. The non-uniform mixture distribution in the horizontal position contributes to the fact that the operation behavior of the vortex plate atomizer does not satisfy the conditions of stable resonator explosions.

The many fine nozzle holes, about a fraction of a millimeter in diameter, not only require careful and expensive shop work but also place heavy requirements on the purity of the fuel, if clogging is to be avoided. Regulation, so that all atomizers handle the same mass flow, is not possible. Hence, there are certain possibilities of error in automatic fuel regulation which are unconditionally required for the free flying air resonator. Certain other error tolerances must also be added to these and hence there will be non-correctible inaccuracies in the flight velocity.

The previously indicated three fundamental requirements were not fulfilled in the intermittently operating internal mixture formation of Schmidt. Therefore this design could not be carried out in practice.

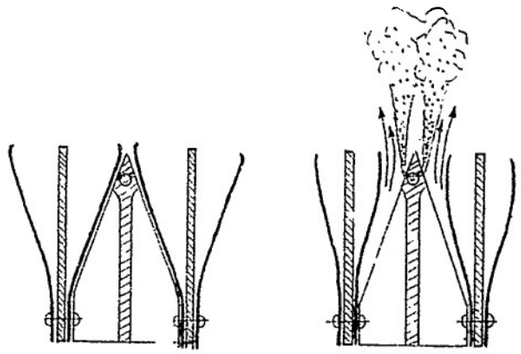

Fig. 87 DIEDRICH/ARGUS 1941 — Proposal of an internal intermittant mixture formation
Union of valve + atomizer

Figure 87 shows a proposal of the author directed at a solution of the intermittently operating internal mixture formation problem in connection with the ridged-rib valve construction. The difficulties are about the same as in the Schmidt design, since here a large number of fine bore-holes are also required in order to attain a sufficiently fine degree of atomization. A tight cut-off could not be achieved with the spring valve-flap. Hence, as with the cover plate atomizer, because of the leaking of the fuel, the efficiency of the resonator depends on its attitude.

Further work on the solution of the problem of intermittent internal mixture formation was done by Hoffmann, DFS. Darmstadt, in connection with research work on the intermittent operating rocket. Hoffman used the Bosch high pressure pump in conjunction with Bosch-nozzles. These are found in use in diesel engines (Fig. 88). Schafer, DFS. Prien in 1941 ran a controlled non-resonator engine operating with high-pressure Bosch injection at a frequency of 12 cycles per second. He did not succeed in increasing the frequency nor in obtaining resonant operation.

The investigations with the Bosch high-pressure injection system, which were made in order to solve the problem of intermittent internal mixture formation has still not been successful up to now. The Bosch-injection system failed completely to satisfy Part 3, even though it satisfied Part 1, "Good refinement and uniform mixture distribution in the combustion chamber", and also Part 2, "Assured starting condition and good regulation". The development in this direction does not appear promising because of the expensive machining of the fuel atomizers and because of the pump drive problem.

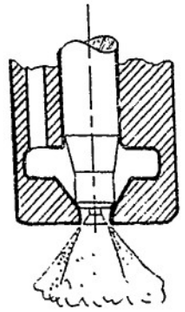

Fig. 88 SCHAFER / HOFFMANN } DFS — Bosch-cone nozzle for internal intermittant mixture formation

Steady Mixture Formation

External. In steady external mixture formation the fuel at unchanged overpressure is continuously atomized in front of the input valve with the air flowing in beats. One should note the difference between this type of mixture formation and the carburetor mixture formation, in which the fuel intermittently flows out of the carburetor jet because of the changing vacuum in the venturi. A venturi is not needed for steady external mixture formation.

This kind of arrangement can be utilized for multi-fuel combinations. For example, the DFS in Ainring in 1944 used a steady external mixing of nitrous oxide in the investigation attempting to raise the output of the Argus aero-resonator. The resonator was operated as usual with steady internal gasoline mixture formation.

As compared to the intermittent process, the steady external mixture formation has the advantage that it can also be developed for large aero-resonators without fundamental complications.

The principle disadvantage of all of the external mixture formations, namely the danger of valve destruction during backfiring, is the chief reason why this direction of development has not been followed.

Internal. In order to understand the step in development to the simple satisfactory internal mixture formation process with continuous gasoline injection (Fig. 81-83), it should again be mentioned that an Argus aero-resonator will not operate if the Schmidt atomizer or some other external mixture equipment is used instead of the spoiler nozzle mixture-formation process. The key for satisfactory operation is the proper relationship of the tube and spoiler nozzle dimensions. Only with the help of this spoiler nozzle, which has the appearance of a venturi (Fig. 40), with its simple steady atomization of the fuel, was it possible to obtain resonant operation.

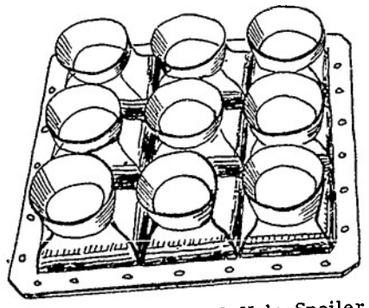

Fig. 89 ARGUS: 1943 — 9-Hole-Spoiler Nozzle

There are many possible spoiler nozzle shapes. It requires in the first place a decrease in the cross section behind the valve. The diminishing of the cross section should be as continuous as possible since the air inflow coming from the valve slots is "cut into pieces" and should be collected in an orderly way.

In Figures 19 and 20 some variants of spoiler nozzles have already been shown. Figure 89 shows a 9-hole spoiler nozzle and Figure 90 shows an additional form, the box spoiler nozzle, which proved itself in the series design.

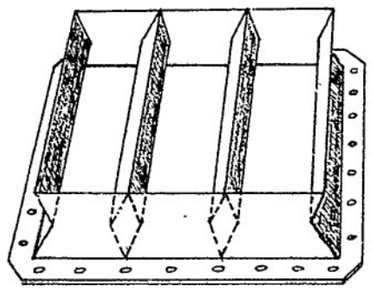

Fig. 90 ARGUS: Box-Spoiler Nozzle 1944

The technical progress brought about by the spoiler nozzle mixture formation process becomes apparent if we contrast the 1941 state of development of the Schmidt resonator, using intermittent internal mixture formation, with the Argus resonator using steady internal mixture formation. Both resonators give approximately 400-500 Kilograms (880-1100 pounds) of thrust.

P. SCHMIDT Intermittent Internal Mixture Formation	DIEDRICH/ARGUS Steady Internal Mixture Formation
170 cover plate regulators with moving parts	9 twisting nozzles without moving parts
conical valve	flat valve
sensitivity to attitude	not sensitive to attitude
unstable operating characteristics	stable operating characteristics
no developed starting process	fully developed starting process

The Argus aero-resonator was clearly superior.

The road to the discovery of this simple workable process by the author was characterized by the following basic research: The fuel was already steadily sprayed in, in the first non-self-charging Argus resonator burner (Fig. 17). In order to get the resonator burner to run it was necessary that the fresh air flow into the combustion chamber with higher velocity. This was attained by means of compressed air.

The next step was the introduction under pressure in the combustion chamber of not the entire amount of combustion air, but only a small part which was unconditionally necessary for formation of mixture. The end result of this research was the non resonator engine (Fig. 18). This engine sucked in as much as 90% of the total entering air; the remaining 10% was compressed air fed in for mixture formation. The compressed air was at about 1/2 to 1 atmosphere excess pressure.

This compressed air atomizer arrangement was functionally an ejector-suction device, as is clarified in Figure 91. The residual exhaust gases which remained from the previous cycle were forced into the exhaust tube by the entrance of the fresh compressed air mixture. This intensified the suction effect and caused starting to be simple.

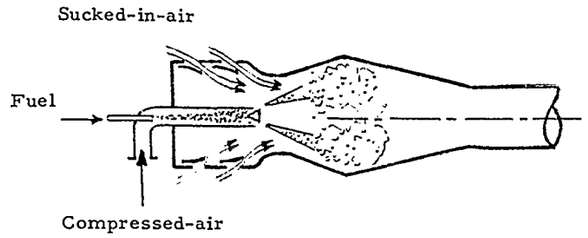

Fig. 91 DIEDRICH/ARGUS: 1940 Compressed air ejector of the non-resonators (Fig. 18)

With increasing pressure of the compressed air, the ejector effect is intensified. Correspondingly, the air filling and the explosions become stronger inasmuch as the pressure of the fuel is also raised at the same time.

The entrance of the ejector air inhibits the automatic ignition by the residual gases, as is the case with resonator explosions. The fresh mixture which is brought in must always be re-ignited. Hence a continuously connected device is required.

The next idea was to utilize the fuel which was injected under pressure like a kind of water jet pump to create a suction effect after every explosion. In order to carry along with it as much air as possible, the jet surface area of the injected fuel must be large.

Research in this direction was initiated with multiple nozzles and fuel-shower heads. The most intensive jet action was attained with centrifugal force nozzles (compare the injection nozzles, p. 89). The fuel cloud, which is sprayed in at a wide cone-angle, occupies a large volume. A correspondingly large combustion chamber is required. With this device, Point 1 is especially fulfilled, namely; good refinement and uniform mixture distribution in the combustion chamber.

With the first experimental model of a fuel-jet ejector (Fig. 92), the author was able to establish in 1941 a completely self-charging resonator explosion operation with continuous internal injection. The spoiler nozzle type of element was employed for the first time.

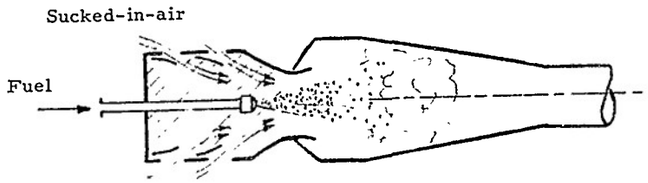

Fig. 92 DIEDRICH/ARGUS 1941 Fuel jet-ejector
1. Stage of development of the spoiler nozzle mixture formation

The pressure-peaks of the first spoiler nozzle experimental engine (Fig. 92) were very small, indicating weak explosions. Instead of the hard ignition peaks of the non-resonating engine (Figs. 18 and 91), an overlapping of pulsations was attained. A fuel consumption of more than 1.8 grams per second per kilogram of stationary thrust was realized.

It appeared that the continuous spray of fuel with the object of using the ejector action to create the air suction effect might be an uneconomical process. Thus it was declared by Gosslau/Argus in the Academy lecture, "Explosion Jet Tubes" (Feb. 1941), that the development of the Argus firm would be in the direction of the non-resonator engine with steady compressed air atomization.

The author succeeded in lowering the specific fuel consumption below 0.9 g/sec.kg. by reducing the volume of the hatched region of Figure 92 and by the adaptation of the spoiler nozzle to an optimum-size flat valve (Fig. 40). Hence a fuel consumption as low as the non-resonators was achieved.

Ease of regulation was obtained simply by changing the fuel pressure.

Longer work of development will be required for the starting process. A solution of this problem without the use of compressed-air was not obtained.

In the spoiler-nozzle process, a fuel pump which operated at a maximum pressure of about 12 atmospheres was the single power-operated device necessary for the fuel transmission and atomization. One could even remove the necessity for the pump by using pressure tank transmission requiring only a compressed air tank (Fig. 21). Thus this steady internal mixture formation clearly fulfills the simplicity requirement of Point 3.

The further development and improvement of the spoiler nozzle mixture formation process was attacked by the author together with Eisele, DFS Ainring, in 1944.

The proposals for improvement included the use of double fuel-nozzles and new types of spoiler shapes. Designs in these directions are as yet not satisfactory for use. Values obtained by extrapolating from flight measurements indicate that a lower fuel consumption is attained in flight, especially at high velocities, than is obtained on the test stand.

Mixture-Formation Equipment for Vaporous and Gaseous Fuels

The use of liquified and compressed gases for flying or for locally moving resonators is strongly limited by the tank weight. For hydrogen, the tank weight amounts to about 5 kg/1,000 kilogram calorie. For methane, a value of from 0.7 to 1.4 kg/1,000 kg. cal. is required, while for liquified gases the "packing weight" can be reduced from 0.11 to 0.16. Normal gasoline tanks weigh 25% less than liquified gas tanks. This shows that it is practically hopeless to build aero-resonators which use gaseous fuels in flight operation. But the development work which was done can still be important for the resonator-burner or the resonator-blower fields.

Evaporator Devices

In 1939 P. Schmidt investigated the vaporization of fuel in a hood enclosing a resonator, the vapors being introduced into the combustion chamber. This work was only for experimental purposes.

Another experimental model using vaporized fuel was built by Klanke, DFS, using an Argus-burner similar to that shown in Figure 18, equipped with a flow-valve like that

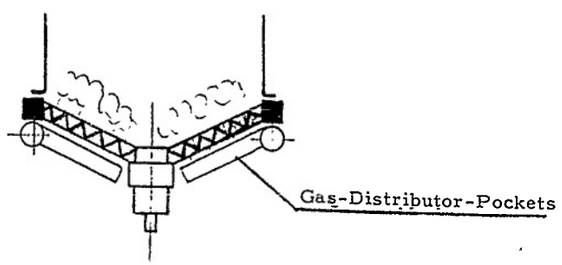

Fig. 93 P. Schmidt: 1939 Gas-mixture equipment in front of the inlet-valve

of Figure 60. The equipment of Klanke is sketched in Figure 94. Here the intentions was to pass the fuel vapors into an ejector nozzle and to use the vapor pressure to pre-compress the combustion air. The vaporizer was constructed with a tube wound around the exhaust tube. Periodic explosions with a weak self charging operation were attained with this arrangement. A filling of the combustion space to a reasonable order of magnitude could not be established.

Later in 1943, Klanke investigated the method of the fuel-ejector charging of the combustion chamber for use in the Lorin engine (aero-ducts).

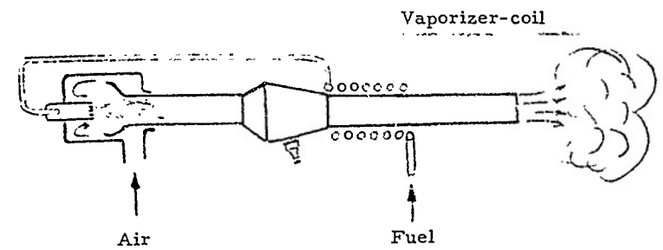

Fig. 94 Klanke/DFS 1940 Vaporizer-research on an ARGUS-Resonator (fuel-vapor-ejector)

The direction of development of fuel vaporization in connection with the application of the ejector effect of the hot streaming fuel jets has had significance for the resonator-blower development. The Forschungsinstitut, Stuttgart, took the soldering blow torch as its starting point of resonator-blower development. A soldering blow torch uses the ejector effect of the vaporized fuel in order to drag along the air of combustion. The combustion occurs at the pressure of the outer atmosphere. There-

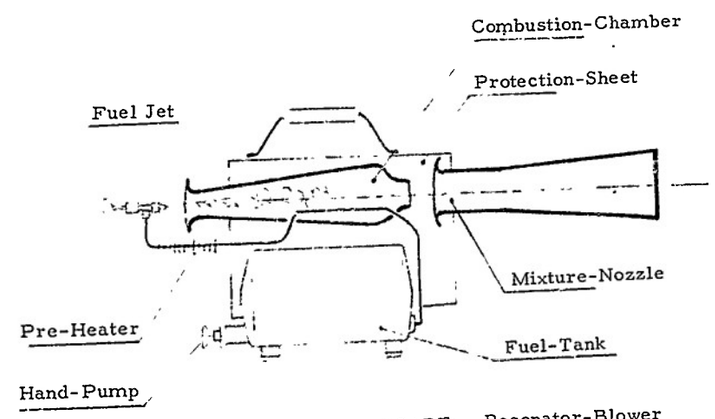

Fig. 95 FKFS STUTTGART: 1943 Resonator-Blower

fore the exhaust gas jet velocity is low. In order to attain higher jet velocities, the explosion-soldering torch was developed, and from this, at FKFS Stuttgart, the development of the resonator-combustion chamber (Figure 62(3)) was carried out.

Figure 95 shows this type of ejector resonator-blower. The fuel pressure was three atmospheres. The fuel is vaporized in passing through that part of the fuel line which goes through the combustion chamber.

For starting purposes the fuel tank is pressurized with a hand pump. The fuel preheater is heated. Highly super heated fuel vapors are developed which are injected into the combustion chamber, dragging with them the required combustion air. Thus an ignitible mixture is obtained.

A principal disadvantage of all such methods of fuel evaporating mixture formation is that with gasoline and benzene operation gum and carbon residues are deposited in the fuel line. In particular, the fine nozzle holes get clogged. The residues constrict the line cross section, causing a reduction of the fuel mass flow. The result of this is that the resonator operation becomes unsatisfactory, the running becoming very rough. The nozzles must be cleaned often.

Gas Mixture Arrangements

The Schmidt resonator "500" was operated experimentally with gaseous fuels before a satisfactory solution of the mixture formation problems using liquid fuels was obtained. In the spring of 1940 a 500-kg. static thrust was attained for short times with propane or butane gas mixture equipment (Figs. 28 and 93).

According to the view of Schmidt, it was easier to obtain resonator operation with gaseous fuels than with liquid, since the time of distribution of liquid fuels in the combustion chamber is greater and hence extremely fast ignition would not seem attainable.

The Schmidt resonator "500" (Figure 93) was equipped with radially arranged distributor pockets, which were distributed uniformly over the outer valve cross section. Thus it was provided with steady external mixture formation. Since the time of operation was only 1 second, the certainty of performance could not be determined.

Schmidt in 1943 investigated a relatively short resonator engine, which was about 1 meter long and with 80-100 mm exhaust tube length, operating with gaseous fuel. The engine was a model of the combination engine (Figure 25) proposed by the author.

It was shown then that the gaseous external mixture formation still required time for development before it would function successfully in such a small model type as was necessary for use in wind-tunnel research. Schmidt employed many small mixture tubes which were placed in front of the flap valves. This model resonator operated for only a short time since the valve flaps were quickly affected by their close proximity to the combustion chamber.

The transformation of this engine to an installation using liquid fuel and spoiler nozzle process was quickly carried out without taking out time for development. This can be considered as significant proof of the superiority of the spoiler nozzle mixture formation process.

Rheinst, who intended his explosion-pot (Figure 13) to serve as a steam generator, provided a fuel line, placed concentrically around the pot opening, with holes bored in the circular tube. The fuel gas streamed out of the holes in a fine spray and was sucked with the air of combustion into the interior of the pot. A water-cooled venturi collar was necessary to inhibit premature heating of the mixture. The mixture ignites itself just beyond the venturi collar.

In summary it can be said that the mixture formation arrangements using gaseous fuels satisfy the aforementioned conditions (1) - (3) for stationary installations. The unfavorable energy volume ratio and the heavy tank requirements (steel tanks) prohibit their application to flight. The view that a gaseous mixture formation is superior to that of liquid fuels with regard to thermodynamical properties (reduced time of mixture distribution), and that faster ignition can be obtained with it when used in very short resonators was not confirmed in experimental operation.

Mixture Formation Equipment for Powder Fuels

The application of powder fuels to resonator-heater operation is desirable in view of the low cost of coal powder. The technical tasks which are bound up with the processes of grinding, bunkering, supply, and regulation are still so significant and incisive that the application of coal powder as a fuel for aircraft engines scarcely has meaning.

The author, who gained practical experience for this path of development in working on a power-station coal-dust boiler installation, instigated a research program on

coal-dust resonator heaters in the summer of 1944. This was done in order to establish a relationship between the limits of work of the resonator explosion process with respect to the fuel used.

In cooperation with Eisele, DFS, Ainring, the first measurements of an Argus aero-resonator using coal dust were carried out. It was provided with steady external

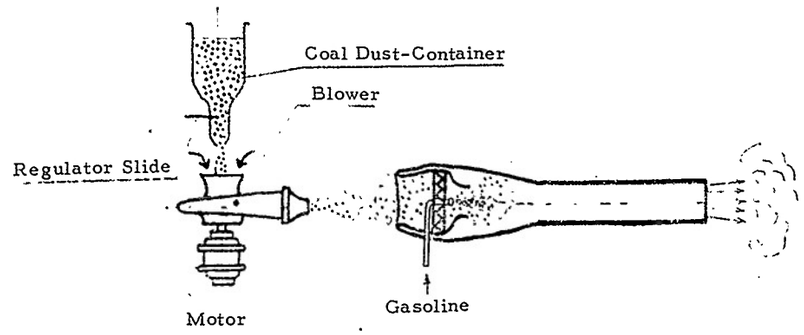

Fig. 96 EISELE DFS AINRING: 1944 RESONATOR-RESEARCH with coal dust

mixture formation (Figure 96). The coal dust trickled out through a vertical funnel opening directly into a blower conveyor tank and was blown together with the surrounding air directly into the inlet nacelle by the suction action of the blower.

During this research, the Argus aero-resonator retained its normal gasoline mixture formation equipment. Also, the spoiler nozzle was not removed, so that there was no interference with the normal mode of engine operation. The resonator was started in the usual way, was run at full load, and then was regulated to a fractional load. Next, the coal dust blower was switched on and the thrust again increased corresponding to the quantity of coal dust being added.

It was immediately found that operation with coal dust was fundamentally possible. The explosions were somewhat weaker; the exhaust flame was dark red and somewhat blackish, which indicated incomplete combustion. The engine was not operated using only coal dust for fuel. For this purpose changes in the internal mixture formation arrangement would have been necessary. The coal dust substituted for about 50 % of the gasoline required. The fuel consumption based on pure coal dust operation was over 1.8 g/kgsec.

This preliminary research showed that the efficiency of the resonator combustion was exceptionally strongly dependent on the fineness of the coal dust. The customary fineness of the coal dust used in power-station coal-dust boilers is not satisfactory here. The grain size must be of the order of magnitude of from 0.005 to 0.030mm, so that the ignition lag, which depends on the fineness, does not become too great. According to the investigations of Wentzel, the ignition lag amounts to about 0.01 to 0.03 seconds in the combustion bomb. According to the engine investigations of I.G. in Oppau, the duration of entire combustion amounts to only 0.003 to 0.015 seconds, about 1/10 to 1/4 the time ascertained in bomb research.

In the resonator operation, the combustion duration is about 0.005 sec. As is the case with the coal-dust engine research of IG in Oppau, the problem to be solved for the coal-dust explosion resonator is also the lag of ignition.

Further coal-dust resonator explosion research was carried out by the FKFS Institut on resonator hot-gas blowers and heaters.

Special Elements of the Spoiler Nozzle Mixture Formation Process

The Atomizer Nozzles. The fuel atomizer nozzles have the task of splitting up the fuel into more or less fine drops and hence to make the fuel surface as large as pos-

sible. The finer the drop-size the greater must be the energy expenditure in order to overcome the cohesion forces of the liquid.

One can distinguish two groups of atomizer nozzles which come into consideration for the spoiler nozzle mixture formation process:

(a) Atomizer nozzles in which fuel placed under pressure is sprayed onto a reflection plate.
(b) Atomizer nozzles in which the atomization is effected by means of centrifugal force.

(a) Observation shows that a very extensive atomization is achieved by the reflection of a liquid jet from a surface. The Duron atomizer nozzle (Figure 97) is built according to this principle. The reflection surface is placed directly in the mouth of

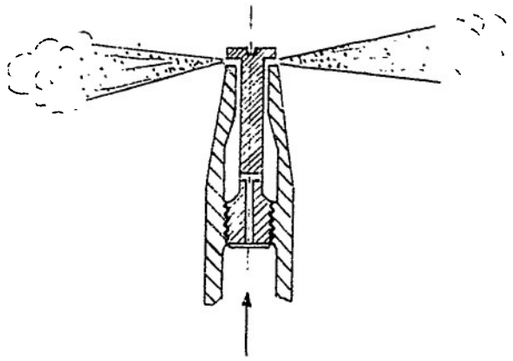

Fig. 97 DURON'S REFLECTION-ATOMIZER-NOZZLE

the nozzle. The liquid jet passes out through an annular slot which can be adjusted. A flow pressure of from 1 to 6 atmospheres is required in the Duron nozzle. With a large amount of throttling the fine liquid particle haze becomes non-uniform and decomposes into individual jets.

Instead of the fixed reflection surface, an oppositely directed jet can also be used. A good atomization can also be attained with a protruding sphere or half sphere.

The closed Bosch injection nozzles can also be classified with the reflection plate atomizer nozzles.

(b) Atomizer nozzles in which the dissolution of the liquid jet occurs by means of centrifugal force applied to a quantity of liquid leaving the nozzle opening, have found a wide technical use. Nozzles of the Schlick type of construction (Figure 98) could be used without alteration in the Argus aero-resonator; the models of the Korting and Lechler firms are equally good. The principle of operation of these centrifugal force nozzles is explained below.

In front of the nozzle opening there is a coaxially arranged cylindrical or conical chamber in which the fuel streams tangentially, causing a twisting of the fuel stream. The fuel then passes into a conical casing which can be made either of shallow or steep angle.

By changing the pressure on the liquid, the performance and injection quantity of the atomizer nozzles can be altered. With too low pressure, the rotation becomes low, resulting in poor atomization. With too much pressure, the outlet is too small. A centrifugal force nozzle with constant dimensions is optimum for only one fixed value of fuel flow. This consequently determines the regulation behavior of the Argus aero-resonator, which is supplied with Schlick centrifugal-force atomizers.

The atomization by means of centrifugal force nozzles is extraordinarily good. For example, one obtains a fuel particle which has, for a fuel pressure of 6 atmospheres, a surface which is about 2300 times as large as the unatomized fuel droplets. At 4 atmospheres, the increase in surface area is about 2000 times; at 2 atmospheres

Abb. 98

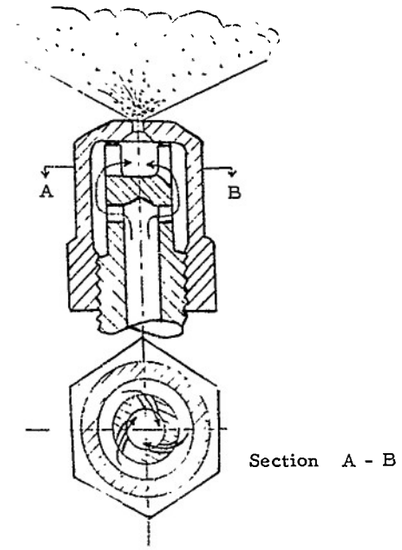

Fig. 98 SCHLICK'S TWISTING-ATOMIZER-NOZZLE
Centrifugal-Force-Jet

excess pressure, 1700 times. The atomization has been successfully carried so far that the fuel particle assumes a boundary state between the liquid and gaseous states.

In Figure 99 are shown some constructive solutions of some commercial centrifugal force nozzles.

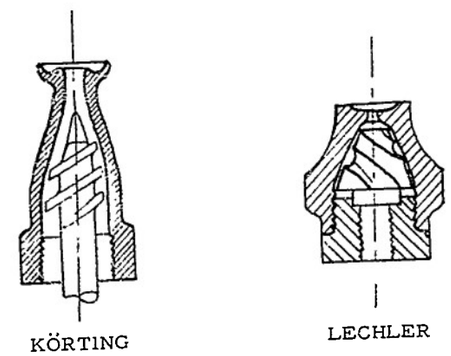

Fig. 99 CENTRIFUGAL - FORCE - NOZZLES

The Fuel Supply Transmission

The fuel supply transmission should be so dimensioned and arranged that all the centrifugal force nozzles are subject to equal fuel pressure. Figure 100 shows the usual arrangement of the system of supply tubes in front of the inlet valve, the marked points indicating the seating position of the 9 centrifugal force nozzles. The central tube has an internal width of 14 mm. The outer tubes are about 10 mm. in diameter.

From the standpoint of increasing the air mass flow, the arrangement of the system

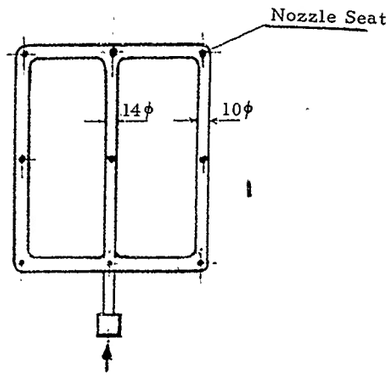

Fig. 100 ARGUS: Fuel-Feed-Pipe-Frame

of fuel supply tubes directly before the valve is inconvenient. The free inlet cross section is reduced, which causes a reduction in thrust of about 5%.

In the construction of the indented flap valve indicated in Figure 45, the supply lines were so misplaced that a reduction in thrust was caused.

Starting Arrangement of the Spoiler Nozzle Mixture Formation Process

In order to develop a usable jet engine it is not sufficient to attain a stable resonator explosion operation. An assured starting and regulating process is also necessary.

At first the engine was started by blowing air directly through the inlet valve, in this way achieving the first filling with fresh air. This method was uneconomical, since a very large amount of compressed air was consumed. Also it did not function all the time, since the valve flaps were often closed with irregular tightness, and air would enter only through those valves that were slightly open. It was therefore possible that fresh air would not come into the neighborhood of the ignition spark plug, and hence an exhaust gas residue would remain to hinder immediate ignition.

The next step towards the solution of the starting problem was the insertion of a comb of small tubes into the valve. The flaps were pressed down by the small tubes. The compressed air which flows in through the small tubes combines with the injected fuel to form the first ignitible mixture. The disadvantage of this method was that those flaps through which the small tube comb was placed had to remain open during the first ignition. Jets of flame passed through these openings and therefore the initial ignition was not sharp, but only a weak explosion which did not give rise to a strong intake effect. This method of starting, therefore, left something to be desired.

The injection of compressed air into the combustion chamber through small tubes situated near the atomizer nozzles was the next step. At first two small tubes were used. Here the starting was also not certain, since the air streamed into the combustion chambers in an axial direction only.

It was found out later that the blown air must flow into the combustion space in the direction of the ignition spark plugs; therefore the present slanting form of the starting tubes was developed. The advantage, contrasted to the small tube-comb method, was that the flaps were all tightly closed during the initial ignition, and therefore a strong starting ignition with a forceful intake was obtained. Three small starting tubes sufficed for the mass-produced Argus aero-resonator, which was equipped with 9 centrifugal force nozzles for the fuel injection.

The starting process which the author worked out in test stand investigations in 1941 is shown in Figure 101.

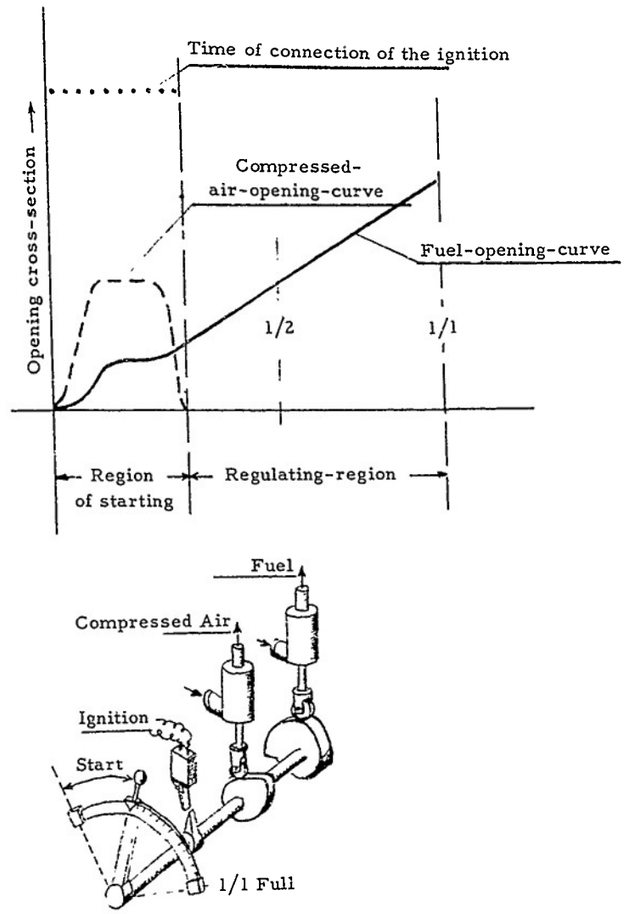

Fig. 101 DIEDRICH/ARGUS: 1941 Combined starting and regulator-valve lever-operation

The dashed line is the opening curve for the starting compressed air. The smoothly drawn curve represents the opening curve of the fuel valve. The dotted curve is the time of connection of the ignition.

At first the compressed air valve is opened rather jerkily. The fuel valve is at this time still closed. A charge of fresh air therefore enters the combustion chamber. The exhaust gas residue of a previous explosion is removed from the neighborhood of the ignition spark plugs.

Next the fuel valve is opened and fuel which is completely atomized because of the low partial-load-pressure, is sprayed into the combustion chamber. The inflowing compressed air provides a good vorticial action and therefore a good mixture refinement and distribution. The first explosion occurs as soon as the first ignitible mixture reaches the ignition spark plugs.

As the engine runs, the fuel valve is slowly opened and the compressed air valve is rapidly closed. This range is the proper regulation range for 1/2 and 1/1 load operation.

When the air resonator is shut off, the converse operations are carried out. The ignition is again automatically switched on, since a mixture will exist in the interior of combustion chamber up to the shutoff point of the fuel. After stopping, compressed air is forced in in order to blow the resonator clear. This kind of "lever-operation" was introduced in stationary test stand operation in 1941.

Principle of Automatic Mixture Regulation

A lever mixture and starting regulation is unsatisfactory for a flying bomb, therefore Gossau Argue developed automatic regulation for the Argus aero-resonator. The Argus principle was pressure balance mixture regulation, in which two regulating impulses are measured out on a measuring beam and the resulting adjusting force of the measuring beam gives the position of the gasoline control.

This type of regulator is the so called position regulator, since every position of the gasoline control corresponds to a certain quantity of fuel flow.

In the V-1 flying bomb the ram pressure and the static pressure of the external atmosphere were chosen as the regulator impulses. Since the air mass flow increases with increasing flight velocity, and because of this a larger amount of fuel must be added, the flight ram pressure was useful as the regulator impulse for this effect.

With increasing altitude of flight, the weight of the intake air per unit time decreases with constant flight velocity. Correspondingly, the external static pressure can be used as a function of the flight altitude. A decrease in the air density requires a corresponding decrease in the quantity of fuel.

The fundamental principle of the pressure regulator for the Argus zero-resonator, which was constructed with many variations, is shown in Figure 102.

Two membrane pressure regulators act on each end of a measuring arm, whose pivot point is connected to a fuel throttle slider. The fuel under the pressure of compressed air flows toward the atomizer jets in quantities proportional to the position of the fuel throttle slider. Figure 102 shows several positions of the pressure balance regulator.

Other proposals for the regulator problem of the V-1 flying bomb were made. At the Peenemunde test station the idea arose that the internal pressure of the fuel might be applied as the regulation impulse for an automatic pressure regulator. The regulator would be set a certain average pressure difference. The fuel supply would be opened if the lower average pressure tolerance is reached. When the upper average pressure tolerance is reached, the fuel supply would again be throttled. This regulator is therefore not a position regulator but a limit position regulator. This regulator has not been tested.

At the beginning of 1945 the author pursued the method of automatic regulators in conjunction with a centrifugal fuel pump driven by an exhaust gas turbine. The exhaust gas turbine could be driven as a tap turbine (Anzap-turbine) was run by high-pressure gases which were taken from the combustion chamber (Figure 26).

The turbine output increased with increasing combustion chamber pressure, thus increasing the speed of the turbine. Correspondingly, the output and the pressure of the fuel pump is increased so that more fuel enters the atomizer jet, and again the result is that on one hand there is an increase in the output of the air resonator, and on the other hand, owing to this, there occurs an increase in the output of the turbine. This system therefore required a regulator, inserted between the atomizer jets and the fuel output pump which maintains the equilibrium between the characteristic line of the pump and the output line of the explosion resonator.

These pumps were ready for testing in February 1945 and the first trial run was made at the Peenemunde test station. Here only the output pressure and the flow quantity of the pump were measured. The output pressure of the pump did not reach the desired magnitude. The turbine output at maximum thrust of the aero-resonator had to be about 6 horsepower. The number of revolutions was calculated to be 18,000 revolutions per minute. The rotor of the fuel pump had a diameter of 6 cm. The blades were mounted with radially bored holes.

The fundamental principles for simple and reasonable cost of production also had to be observed in this design. The turbine was of sheet metal construction and the housing was a light simple welded construction.

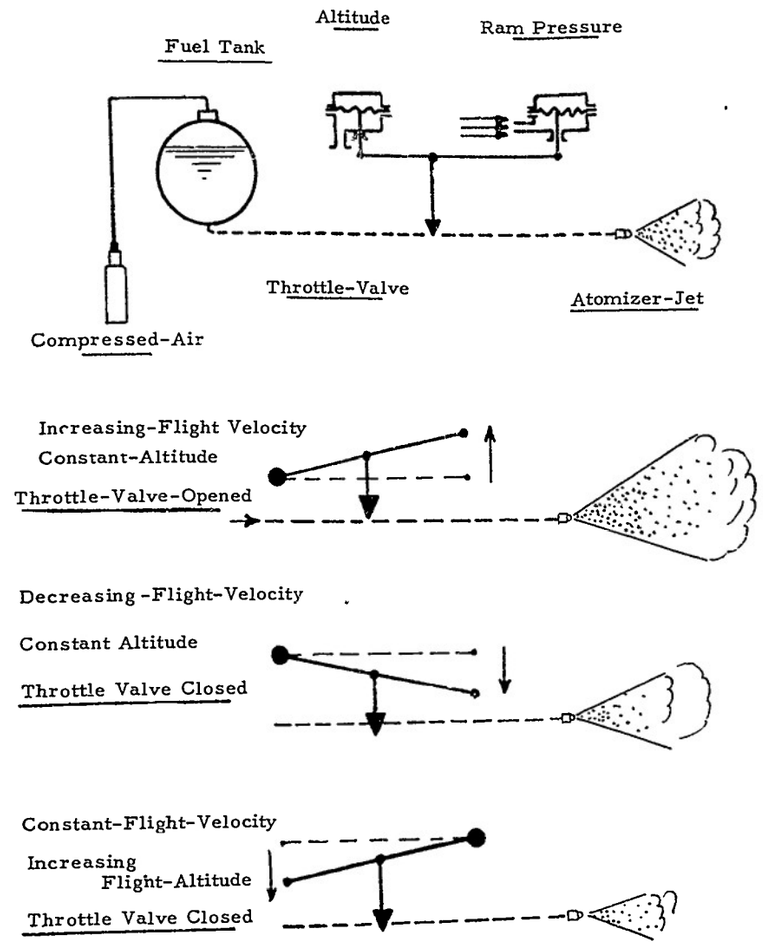

Fig. 102 ARGUS: 1941 Diagram of a pressure-balance-regulator for the "V-1" Flying Bomb

The first investigation with this tap-turbine was successful and the author worked until April 1945 at Ainring on the further development of this design.

7) Summary

Among the various possibilities of solution of the mixture formation problem for resonator combustion, the steady internal mixture formation with the spoiler nozzle proved to be the most suitable. With reference to the fundamental requirements which must be fulfilled by the resonator mixture formation, namely:

(1) Good refinement and uniform mixture distribution in the combustion chamber,
(2) Reliable starting conditions and good regulation,
(3) Low mechanical expenditure for the fuel transmission and atomization and unconditional certainty of operation,

it is superior to both the external type of mixture formation and the internal intermittent type of construction.

A further increase in efficiency can be attained by refinement of the atomizer nozzle technique (double nozzles) by using new spoiler nozzle shapes. This increase, however, will be attained only when a harmonious compromise between a refined valve (indented flap valve) and an optimum adaptation of the external shape of the tube for a fixed flight velocity is achieved.

A. Historical sketch and classification of types	Figures 1-26
B. Resonator test stands	Figures 27-36
C. Resonator-component parts development	Figures 37-102

The author had intended to treat Chapters D) and E) in a second part:

D. Resonator Theory

E. Methods of increasing output

Concluding Remarks

Chapters on Resonator Theory and Methods of Increasing the Power Output were planned, but have not been written because of the press of time.

Up to now, theory and practice have been very widely separated in the field of the explosion resonator. Scarcely a hint of the direction of further practical development can be inferred by the author from the present theoretical treatments. The first prerequisite for a fruitful theory should be a carefully selected, ordered compilation of existing experimental results, obtained from research under reproducible condition of measurement.

The author had intended to show in the Chapter on Resonator Theory, for example, that the assumption of a plane discontinuity between the mixture and the residue gas, which has been made in several well known reports, leads to false conclusions. Theoretical treatments from the point of view of the propagation of pressure disturbances and the vibration of a gas column in a long tube permit only one sided conclusions, since the internal gas motions caused by the mixture formation process, which without doubt play the largest role in the generation of the explosion, are given no consideration. The above mentioned contemplated chapters are desirable, therefore, if a complete picture of the existing state of knowledge of this new field is to be presented.

2 288 450

P21/5

ATI- 29468

REVISION (None)

ORIG AGENCY NO. TM-PR-4

PUBLISHING AGENCY NO. (Same)

TITLE: The Aero-Resonator Power Plant of the V-1 Flying Bomb

AUTHOR(S): Diedrich, Guenther *Pulsejet Engines

ORIGINATING AGENCY: Princeton University, Project Squid, Princeton, N. J.

PUBLISHED BY: (Same)

DATE	DOC. CLASS.	COUNTRY	LANGUAGE	PAGES	ILLUSTRATIONS
June '48	Unclass.	U.S.	Eng.	72	diagrs

ABSTRACT:

A detailed study is presented of the development of the pulsejet engine which served as the power plant for the German V-1 flying bomb. The history and development of the pulsejet from its crudest designs and the test stands developed for this type engine are considered. The dissertation on resonator valves covers inlet valves, flow valves, and controlled valves. The general basic requirements, origins of resonator shapes, and special resonator tube shapes are discussed as well as the basic requirements and basic types of mixture formation, mixture formation equipment for vaporous and gaseous fuels and powder fuels, and special arrangements of the spoiler nozzle mixture formation process. The principles of automatic mixture regulation and gas mixture arrangements are reviewed.

NTIS, Auth: ONR ltr. 19 Jul 77

~~DISTRIBUTION: Copies of this report obtainable from Air Documents Division; Attn: MCIDXD~~

DIVISION: Guided Missiles ~~(1)~~ 12

SECTION: Propulsion ~~(3)~~ 4

SUBJECT HEADINGS: Missiles, Guided - Propulsion (63450); Engines, Pulse jet - Development (33988.2); V-1 (95970)

AD-A800 231

TECHNICAL INDEX

Wright-Patterson Air Force Base
Dayton, Ohio