Reproduced by

CENTRAL AIR DOCUMENTS OFFICE

WRIGHT-PATTERSON AIR FORCE BASE - DAYTON, OHIO

REEL-C 3666B

A.T.I 76886

The U.S. GOVERNMENT

IS ABSOLVED

FROM ANY LITIGATION WHICH MAY ENSUE FROM ANY INFRINGEMENT ON DOMESTIC OR FOREIGN PATENT RIGHTS WHICH MAY BE INVOLVED.

UNCLASSIFIED

Finite Difference Equations for the Analysis of Thin Rectangular Plates With Combinations of Fixed and Free Edges

76 886

(None)

Barton, M. V.
University of Texas, Defense Research Lab., Austin
(Same)

DRL-175

(Same)

Aug '48 Unclass. U.S. English 28 tables, diagr

Finite difference and differential equations are developed for the analysis of thin rectangular plates with one edge fixed and three edges free, as a preliminary study of the structural characteristics of thin swept wings and fins. Emphasis is placed on the finite difference equations, and expressions are presented for the determination of deflections, shears, moments, and reactions for a rectangular plate with various combinations of fixed and free edge conditions and transverse loadings. The deflections and stresses for a square plate fixed along one edge and carrying a load at the center of the other edge was evaluated. These quantities are compared with experimental results. Good agreement is obtained between theoretical and experimental results.

Copies of this report obtainable from CADO.

Structures (7)
Theory and Analysis (2)

Plates - Stresses
Equations, Differential
Wings, Swept - Stress anslysis

AIR DOCUMENTS DIVISION, T-2
AMC, WRIGHT FIELD
MICROFILM No.
R 3666 F

ATI No. 76 886
CADO FILE COPY

DEFENSE RESEARCH LABORATORY
THE UNIVERSITY OF TEXAS

Copy No. 77

CF-1005
DRL-175
UTX-1-AA-3
August 6, 1948

Finite Difference Equations for the Analysis of Thin Rectangular Plates with Combinations of Fixed and Free Edges.

by

M. V. Barton

DEFENSE RESEARCH LABORATORY
THE UNIVERSITY OF TEXAS

MVB:fs

CF-1005
DRL-175
UTX-1-AA-3
August 6, 1948

Finite Difference Equations for the Analysis of Thin Rectangular Plates with Combinations of Fixed and Free Edges.

by

M. V. Barton

Abstract

As a preliminary study of the structural characteristics of thin swept wings and fins, the equations for the analysis of thin rectangular plates with one edge fixed are developed in differential and finite difference form. Emphasis is placed on the finite difference equations and expressions are given for the determination of deflections, shears, moments, and reactions for a rectangular plate with various combinations of fixed and free edge conditions and transverse loadings.

A numerical evaluation is made of the deflections and stresses for a square plate fixed along one edge and carrying a load at the center of the other edge. These quantities are compared with experimental results. Reasonable correlations (within about 5 percent) between theoretical and experimental results are obtained.

Introduction

The present work is the beginning of a more comprehensive project to determine the elastic and dynamic properties of skew plates which are similar to the sweptback fins used on supersonic guided missiles. The information to be obtained ultimately is expected to consist of elastic characteristics, such as the deflections, stress distributions, elastic axis positions and so forth for thin plates of low aspect ratio, with one edge clamped and three edges free, for various load conditions, as well as dynamic characteristics such as modes of vibrations, natural frequencies, and so forth. Analytical and experimental procedures are to be used. Such information should be of considerable value in facilitating the structural design of wings and fins and in providing much needed information on the structural phase of aero-elastic problems.

In order to "prove in" methods and techniques, the relatively simple problem of the rectangular plate is first studied. This report consists of an account of the plate equations for the static structural analysis of rectangular thin plates with one edge fixed and three edges free, in terms of

the differential as well as finite difference equations. In addition, a numerical evaluation is presented for the deflections of a square rectangular cantilever plate with a concentrated load applied at the center of the outboard edge. Analytical results are compared with test values.

It is expected that later reports will deal with the more complete solutions of rectangular plates with a variety of loading and will discuss the relative merits of methods of analysis such as the relaxation procedure and the solution of simultaneous equations, along with the effect of network size on the accuracy of solutions of the finite difference equations and the effect of Poisson's ratio. Experimental results will also be indicated. A similar procedure will be followed in presenting the results of skew plate analyses.

Many investigators have solved a great variety of plate problems. However, exact solutions, by which is meant an analytical solution to the governing differential equations, have been largely confined to rectangular or circular plates with the boundary edges fixed, simply supported, or a combination of fixed, free and simply supported. An example of this type of solution is that of the "rectangular plate with two opposite edges simply supported, the third edge free and the fourth edge built in or simply supported" given by Timoshenko(1) on page 215 of "Theory of Plates and Shells". The problems of the skew plate or the rectangular plate with more complicated boundary conditions have received relatively little attention probably because of the great complexity of obtaining an "exact" solution or the tremendous labor involved in obtaining approximate numerical solutions by means of finite difference equations or other methods. Some work, however, has been done on these problems by means of finite difference equations. For example, Jensen(2) solves a number of skew plate problems for a variety of lateral loads with two opposite edges simply supported and the other two edges free or elastically supported. Hall(3) has solved the problem of a cantilever rectangular plate for which the fixed edge is four times the cantilever length and which carries a concentrated load at the center of the outboard edge.

Differential Equations

The equations of equilibrium of an element of thin plate in terms of rectangular coordinates are well known (see reference 1) and will only be cited here. The directions corresponding to positive quantities are shown in Figure 1.

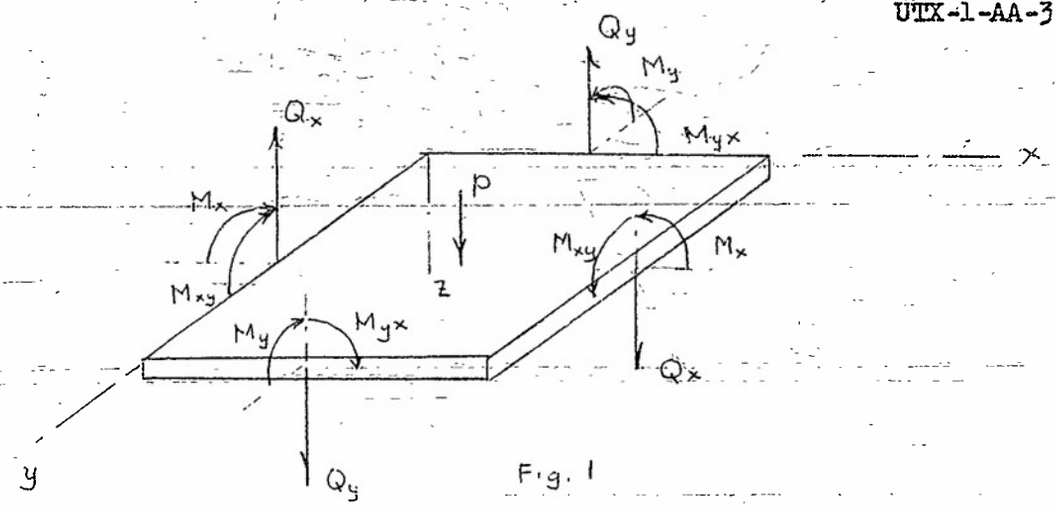

Fig. 1

Load:
$$\frac{\partial^4 w}{\partial x^4} + \frac{2\partial^4 w}{\partial x^2 \partial y^2} + \frac{\partial^4 w}{\partial y^4} = \frac{p}{D}$$

Moments:
$$M_x = -D\left(\frac{\partial^2 w}{\partial x^2} + \mu \frac{\partial^2 w}{\partial y^2}\right)$$

$$M_y = -D\left(\frac{\partial^2 w}{\partial y^2} + \mu \frac{\partial^2 w}{\partial x^2}\right)$$

$$M_{xy} = M_{yx} = D(1-\mu)\frac{\partial^2 w}{\partial x \partial y} \qquad (1)$$

Shears:
$$Q_x = -D\left(\frac{\partial^3 w}{\partial y^3} + \frac{\partial^3 w}{\partial x \partial y^2}\right)$$

$$Q_y = -D\left(\frac{\partial^3 w}{\partial y^3} + \frac{\partial^3 w}{\partial y \partial x^2}\right)$$

Edge force:
$$R_x = -D\left[\frac{\partial^3 w}{\partial x^3} + (2-\mu)\frac{\partial^3 w}{\partial x \partial y^2}\right]$$

$$R_y = -D\left[\frac{\partial^3 w}{\partial y^3} + (2-\mu)\frac{\partial^3 w}{\partial y \partial x^2}\right]$$

Concentrated corner force:
$$R = 2M_{xy} = 2D(1-\mu)\frac{\partial^2 w}{\partial x \partial y}$$

where p = intensity of distributed load (psi)

$$D = \frac{Eh^3}{12(1-\mu^2)}$$

E = modulus of elasticity (psi)

μ = Poisson's ratio

h = plate thickness (in)

w = deflection of plate in Z direction (in)

Moments, shears, and reaction are for a unit length of edge.

The equations are limited by the following assumptions.

1. The thickness of the plate is small in comparison with its other dimensions.
2. Deformations are small so that the curvature is approximated by the second derivative of the deflection with respect to coordinates in the plane of the plate.
3. Stretching of the middle surface of the plate is not considered.

The last assumption has as a corollary the fact that the deflection is small compared with the thickness of the plate for certain boundary conditions. If this assumption is not made, then the so-called large deflection theory must be used which takes into account the effect of the membrane forces in which case the relation between load and deflection is not linear. Fortunately, our experiments show that for the boundary conditions used corresponding to the cantilever plate, the load and deflections are essentially linear up to a deflection of at least 20 times the plate thickness. Hence, the use of the linear theory seems justified in this particular problem.

Finite Difference Equations

For the square network shown in Figure 2, the approximate values of the derivatives in terms of finite differences of the values of the deflections at

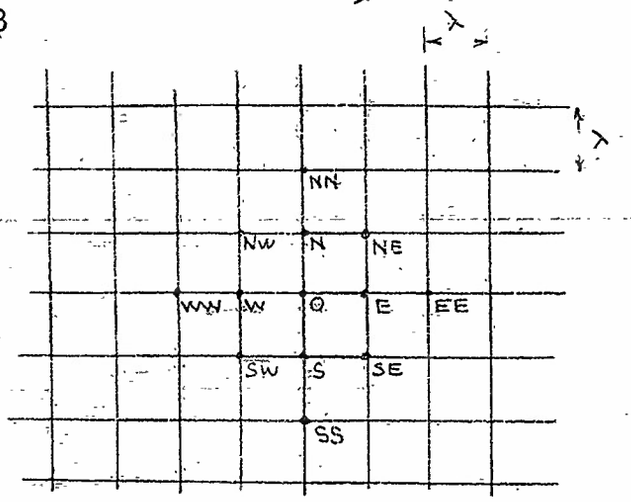

Fig 2.

the various points can be shown to be. See Southwell[4].

$$\left(\frac{\partial w}{\partial x}\right)_o \doteq \frac{1}{2\lambda}\left(w_E - w_W\right)$$

$$\left(\frac{\partial^2 w}{\partial x^2}\right)_o \doteq \frac{1}{\lambda^2}\left(w_E - 2w_o + w_W\right)$$

$$\left(\frac{\partial^3 w}{\partial x^3}\right)_o \doteq \frac{1}{2\lambda^3}\left(w_{EE} - 2w_E + 2w_W - w_{WW}\right)$$

$$\left(\frac{\partial^4 w}{\partial x^4}\right)_o \doteq \frac{1}{\lambda^4}\left(w_{EE} - 4w_E + 6w_o - 4w_W + w_{WW}\right) \qquad (2)$$

$$\left(\frac{\partial w}{\partial y}\right)_o \doteq \frac{1}{2\lambda}\left(w_S - w_N\right)$$

$$\left(\frac{\partial^2 w}{\partial y^2}\right)_o \doteq \frac{1}{\lambda^2}\left(w_S - 2w_o + w_N\right)$$

$$\left(\frac{\partial^3 w}{\partial y^3}\right)_o \doteq \frac{1}{2\lambda^3}\left(w_{SS} - 2w_S + 2w_N - w_{NN}\right)$$

$$\left(\frac{\partial^4 w}{\partial y^4}\right)_o \doteq \frac{1}{\lambda^4}\left(w_{SS} - 4w_S + 6w_o - 4w_N + w_{NN}\right)$$

$$\left(\frac{\partial^2 w}{\partial x \partial y}\right)_o \doteq \frac{1}{4\lambda^2}\left(w_{SE} - w_{NE} - w_{SW} + w_{NW}\right)$$

$$\left(\frac{\partial^4 w}{\partial x^2 \partial y^2}\right)_o \doteq \frac{1}{\lambda^4}\left[w_{NE} + w_{SE} + w_{SW} + w_{NW} - 2\left(w_N + w_S + w_E + w_W\right) + 4w_o\right]$$

where λ = Spacing of square network (in)

The equations for load, moment, shear and reaction in terms of finite differences thus became

load: $$20w_o - 8(w_N + w_E + w_S + w_W) + 2(w_{NE} + w_{SE} + w_{SW} + w_{NW}) + w_{NN} + w_{EE} + w_{SS} + w_{WW} = \frac{p_o \lambda^4}{D}$$

Moments:

$$(M_x)_o = -\frac{D}{\lambda^2}\left[-(2+2\mu)w_o + w_W + w_E + \mu(w_N + w_S)\right]$$

$$(M_y)_o = -\frac{D}{\lambda^2}\left[-(2+2\mu)w_o + w_N + w_S + \mu(w_W + w_E)\right]$$

$$(M_{xy})_o = \frac{D(1-\mu)}{4\lambda^2}(w_{SE} - w_{NE} - w_{SW} + w_{NW})$$

Shears:

$$(Q_x)_o = -\frac{D}{2\lambda^3}\left[4(w_W - w_E) + w_{NE} + w_{SE} - w_{NW} - w_{SW} + w_{WW} + w_{EE}\right]$$

$$(Q_y)_o = -\frac{D}{2\lambda^3}\left[4(w_N - w_S) + w_{SE} + w_{SW} - w_{NW} - w_{NE} - w_{NN} + w_{SS}\right]$$

Edge forces:

$$(R_x)_o = -\frac{D}{2\lambda^3}\left[(6-2\mu)(w_W - w_E) + (2-\mu)(w_{NE} + w_{SE} - w_{NW} - w_{SW}) - w_{WW} + w_{EE}\right]$$

$$(R_y)_o = -\frac{D}{2\lambda^3}\left[(6-2\mu)(w_N - w_S) + (2-\mu)(w_{SE} + w_{SW} - w_{NW} - w_{NE}) - w_{NN} + w_{SS}\right]$$

Corner force:

$$(R)_o = \frac{D(1-\mu)}{2\lambda^2}(w_{SE} - w_{NE} - w_{SW} + w_{NW})$$

Boundary Conditions

The conditions at the edge of the plate to be considered here correspond to a fixed edge and a free edge along which the moment is zero although it may

carry a distributed applied force or a concentrated force at the corner. These conditions are specified formally as follows.

1. Fixed Edge

$$\left.\begin{array}{ll} \text{Deflection zero:} & w = 0 \\ \text{Slope zero:} & \dfrac{\partial w}{\partial x} = 0 \end{array}\right\} \text{at } x = 0 \tag{4}$$

2. Free edge (y = const)

$$\left.\begin{array}{ll} \text{Moment zero:} & M_y = 0 = \dfrac{\partial^2 w}{\partial y^2} + \mu \dfrac{\partial^2 w}{\partial x^2} \\ \text{Edge forces:} & R_y = -D\left[\dfrac{\partial^3 w}{\partial y^3} + (2-\mu)\dfrac{\partial^3 w}{\partial y \partial x^2}\right] \end{array}\right\} \text{at } y = \text{constant} \tag{5}$$

3. Free corner

$$\left.\begin{array}{ll} \text{Moment zero:} & M_x = M_y = 0; \quad \dfrac{\partial^2 w}{\partial x^2} = \dfrac{\partial^2 w}{\partial y^2} = 0 \\ \text{Edge force:} & R_x = -D\left[\dfrac{\partial^3 w}{\partial x^3} + (2-\mu)\dfrac{\partial^3 w}{\partial y^2 \partial x}\right] \\ & R_y = -D\left[\dfrac{\partial^3 w}{\partial y^3} + (2-\mu)\dfrac{\partial^3 w}{\partial y \partial x^2}\right] \\ \text{Corner force:} & R = 2D\,(1-\mu)\dfrac{\partial^2 w}{\partial x \partial y} \end{array}\right\} \text{at corner} \tag{6}$$

In terms of the finite difference equation, the boundary conditions may be expressed as

1. Fixed edge

$$w_o = 0$$

$$w_E - w_W = 0 \tag{7}$$

2. Free edge (y = const.)

$$-(2+2\mu)\,w_o + w_N + w_S + \mu\,(w_W + w_E) = 0$$

$$(6-2\mu)(w_N - w_S) + (2-\mu)(w_{SE} + w_{SW} - w_{NW} - w_{NE}) - w_{NN} + w_{SS} = -\frac{2\lambda^3 (R_y)_o}{D} \qquad (8)$$

3. Free corner

$$w_E - 2w_o + w_W = 0$$

$$w_S - 2w_o + w_N = 0$$

$$(6-2\mu)(w_W - w_E) + (2-\mu)(w_{NE} + w_{SE} - w_{NW} - w_{SW}) - w_{WW} + w_{EE} = -\frac{2\lambda^3 (R_x)_o}{D}$$

$$(6-2\mu)(w_N - w_S) + (2-\mu)(w_{SE} + w_{SW} - w_{NW} - w_{NE}) - w_{NN} + w_{SS} = -\frac{2\lambda^3 (R_y)_o}{D} \qquad (9)$$

$$w_{SE} - w_{NE} - w_{SW} + w_{NW} = \frac{2\lambda^2 (R)_o}{D(1-\mu)}$$

Since w_o in each boundary condition is for a point on the edge of the plate, it is apparent that some of the deflections indicated are fictitious ones lying outside the plate. Take for example the conditions for a free edge along a line y = constant. From Figure 3 it is noticeable that there are deflections at four points off of the plate from the condition for the edge force.

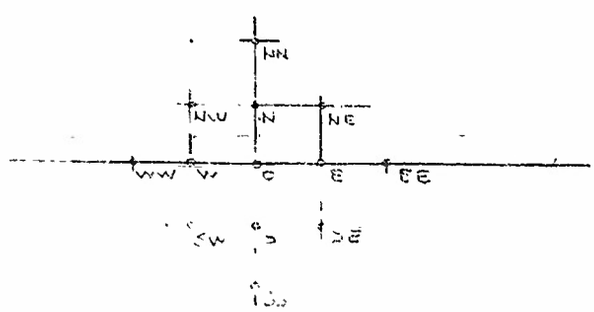

Fig. 3

The deflections are w_{SS}, w_S, w_{SW}, and w_{SE}. These deflections can be evaluated in terms of the deflections on the plate so that the conditions for a free edge can be determined in terms of deflections at points on the plate. Since four quantities are to be eliminated, five conditions are specified along the free edges. They are

load: $$20w_o - 8(w_N + w_E + w_S + w_W) + 2(w_{NW} + w_{NE} + w_{SE} + w_{SW}) + w_{WW} + w_{NN} + w_{EE} + w_{SS} = \frac{p_o\lambda^4}{D}$$

edge force: $$(6-2\mu)(w_N - w_S) + (2-\mu)(w_{SE} + w_{SW} - w_{NW} - w_{NE}) - w_{NN} + w_{SS} = -\frac{2\lambda^3(R_y)_o}{D}$$

moment at o: $$-(2+2\mu)w_o + w_N + w_S + \mu(w_W + w_E) = 0$$

moment at w: $$-(2+2\mu)w_W + w_{NW} + w_{SW} + \mu(w_{WW} + w_o) = 0$$

moment at E: $$-(2+2\mu)w_E + w_{NE} + w_{SE} + \mu(w_{EE} + w_o) = 0$$

Eliminating w_{SS}, w_{SW}, w_{SE}, w_S from these equations gives

$$(16-8\mu-6\mu^2)w_o + (-12+4\mu)w_N + (-8+4\mu+4\mu^2)(w_W + w_E) + (4-2\mu)(w_{NE} + w_{NW}) + (1-\mu^2)(w_{WW} + w_{EE}) + 2w_{NN} = \frac{p_o\lambda^4}{D} + \frac{2\lambda^3}{D}(R_y)_o \tag{10}$$

For an edge with no loading, $p_o = (R_y)_o = 0$.

The equation for the edge condition may be schematically represented as indicated in Figure 4.

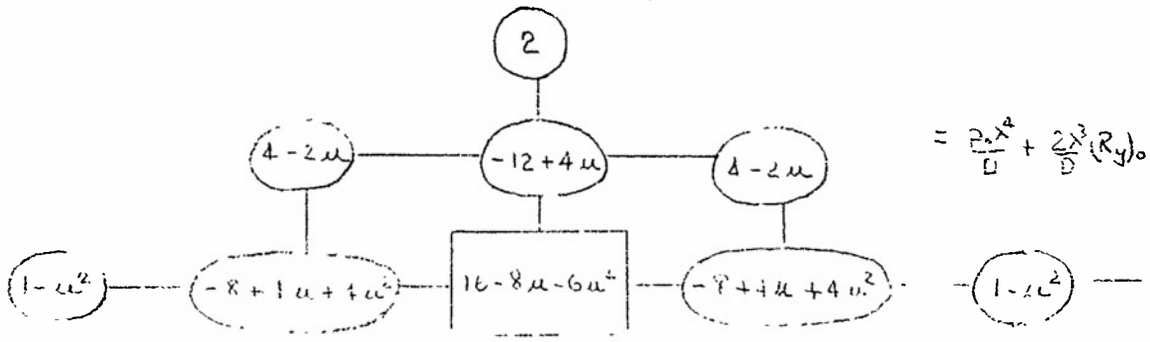

Fig. 4

Other conditions have been determined in a similar manner and the results are tabulated. Table I gives the relations between the deflections and loads for various points on the plate. Tables II and III schematically indicate the same information for the special case in which $\mu=0$ and $\mu=0.3$ respectively.

By means of the relations in Table I, a set of simultaneous equations can be determined representing the relationship between loads and deflections for a rectangular plate with various boundary conditions. These equations are then solved to determine the deflections for specified loadings. An application to a specific problem is given in a later section.

Moments, Shears and Reactions

After the simultaneous equations have been solved for the deflections, the moments, shears and reactions if any, can be determined at each point by means of equations (3) providing the deflections specified in the equations are on the plate. In the case that the moment, shear, or reaction expression is in terms of deflections off of the plate, then the expressions must be modified by the application of the boundary conditions so that the points external to the plate are eliminated. This procedure is similar to that used before so that only the results will be indicated. Table IV gives the expressions for moments, shears and reactions for points on or near various edges.

Principal Moments and Maximum Stress

In order to determine the maximum stress at a point, the maximum value of the moment should be known. The maximum and minimum values of the moments at a point are called the principal moments and they can be determined by combining the bending moments and twisting moments in the arbitrarily chosen x and y directions according to the following relation.

$$\begin{matrix} \text{max:} & M_1 \\ \text{min:} & M_2 \end{matrix} = \tfrac{1}{2}(M_x+M_y) \pm \sqrt{\left[\tfrac{1}{2}(M_x-M_y)\right]^2 + M_{xy}^2} \qquad (11)$$

The angle between the moment in the x direction and the maximum principal moment is given by

$$\tan 2\theta = \frac{2M_{xy}}{M_x-M_y} \qquad (12)$$

The value of the maximum normal stress corresponding to the maximum principal moment is

$$\sigma_{max} = \frac{6M_1}{h^2} \tag{13}$$

where the stress is at the fiber in the surface of the plate.

Analysis of a Square Cantilevered Plate. (μ=0)

Consider a square plate with side length L fixed on one side and supporting a transverse load P at the center of the outboard side as shown in Figure 5. Since the plate is symmetrical about a longitudinal axis through

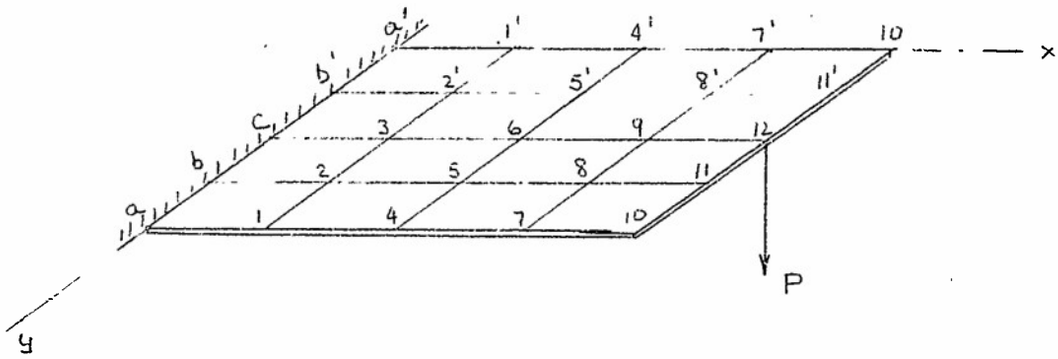

Fig. 5.

the load, the conditions for only half of the plate need be considered. Thus the deflection at point 2' is equal to the deflection at point 2 and so forth. A square network is imposed on the half plate so that there are 12 nodes or grid points to be considered in addition to those along the fixed edge for which the deflections are zero.

By means of the equations of Table I or the patterns of Table II, the conditions relating the loads and deflections for μ=0 at each point are specified. It should be noted that since there is no applied normal plate pressure, p_o is

zero at all points. Similarly along the free edges of the plate there is no applied force except at point 12 where a distributed force of magnitude $\frac{P}{\lambda}$ is assumed to act. In this manner the applied concentrated force is approximated by a force distributed over one grid spacing λ.

The following 12 simultaneous equations result from the applications of the relations given in Table II.

point

1) $17w_1 - 12w_2 + 2w_3 - 8w_4 + 4w_5 + w_7 = 0$

2) $-6w_1 + 21w_2 - 8w_3 + 2w_4 - 8w_5 + 2w_6 + w_8 = 0$

3) $2w_1 - 16w_2 + 21w_3 + 4w_5 - 8w_6 + w_9 = 0$

4) $-8w_1 + 4w_2 + 16w_4 - 12w_5 + 2w_6 - 8w_7 + 4w_8 + w_{10} = 0$

5) $2w_1 - 8w_2 + 2w_3 - 6w_4 + 20w_5 - 8w_6 + 2w_7 - 8w_8 + 2w_9 + w_{11} = 0$

6) $4w_2 - 8w_3 + 2w_4 - 16w_5 + 20w_6 + 4w_8 - 8w_9 + w_{12} = 0$

7) $w_1 - 8w_4 + 4w_5 + 15w_7 - 12w_8 + 2w_9 - 6w_{10} + 4w_{11} = 0$

8) $w_2 + 2w_4 - 8w_5 + 2w_6 - 6w_7 + 19w_8 - 8w_9 + 2w_{10} - 6w_{11} + 2w_{12} = 0$

9) $w_3 + 4w_5 - 8w_6 + 2w_7 - 16w_8 + 19w_9 + 4w_{11} - 6w_{12} = 0$

10) $2w_4 - 12w_7 + 8w_8 + 12w_{10} - 12w_{11} - 2w_{12} = 0$

11) $2w_5 + 4w_7 - 12w_8 + 4w_9 - 6w_{10} + 16w_{11} - 8w_{12} = 0$

12) $2w_6 + 8w_8 - 12w_9 + 2w_{10} - 16w_{11} + 16w_{12} = \frac{2P\lambda^2}{D} = \frac{PL^2}{8D}$

The solution to these equations give

$w_1 = 0.03002 \frac{PL^2}{D}$ $\quad$ $w_7 = 0.21250 \frac{PL^2}{D}$

$w_2 = 0.03143$ $\quad$ $w_8 = 0.21923$

$w_3 = 0.03211$ $\quad$ $w_9 = 0.22405$

$w_4 = 0.10611$ $\quad$ $w_{10} = 0.33331$

$w_5 = 0.10978$ $\quad$ $w_{11} = 0.34370$

$w_6 = 0.11183$ $\quad$ $w_{12} = 0.35430$

These deflections have been substituted into the moment equations given in Table IV. The maximum moment and stress at each point has been determined by means of equations (11) and (12). The maximum stresses in the top surface of the plate are thus found to be

$\sigma_1 = 4.0444 \frac{P}{h^2}$ $\quad$ $\sigma_7 = 1.2649 \frac{P}{h^2}$ $\quad$ $\sigma_a = 5.7633 \frac{P}{h^2}$

$\sigma_2 = 4.4849$ $\quad$ $\sigma_8 = 1.4429$ $\quad$ $\sigma_b = 6.0354$

$\sigma_3 = 4.5307$ $\quad$ $\sigma_9 = 1.4518$ $\quad$ $\sigma_c = 6.1659$

$\sigma_4 = 2.6458$ $\quad$ $\sigma_{10} = 0$

$\sigma_5 = 2.9512$ $\quad$ $\sigma_{11} = 0.4328$

$\sigma_6 = 3.0023$ $\quad$ $\sigma_{12} = 1.8516$

The positive sign of these quantities denotes tension.

The values of the deflections and stresses have been carried out to more significant figures than the data warrant. This was done for comparison of results between different methods of solution.

Comparison between Analytical and Test Results

In order to have a check on analytical methods, a simple plate test

set-up was made consisting of a rigid clamp to hold the plate along one edge and a device for applying a static load at any point along the opposite edge. Deflections were measured by means of an Ames dial gage supported from a rigid reference table. The strains were determined at four points by means of SR-4 electric rosette gages fastened to the surface of the plate.

The specimen used was a 24ST aluminum plate one foot square and 0.127 inches thick. The following data were obtained for an applied edge load of 13.435 lb. and a modulus of elasticity E of 10.3×10^6 psi. Theoretical results for $\mu=0$ and $\mu=0.3$ are given for the sake of comparison. It should be emphasized that although the deflections are determined for the two values of $\mu=0$ and $\mu=0.3$ the value of $\mu=0.3$ has been consistently used in the moment expressions.

Deflections (in)

point	Theoretical $\mu=0$	Theoretical $\mu=0.3$	Experimental recorded	Experimental average	percent difference for $\mu=0.3$ values
1	0.030	0.025	0.023	0.026	-3.84
1'			0.029		
2	0.032	0.033	0.032	0.031	6.45
2'			0.029		
3	0.032	0.034	0.033	0.033	-3.03
4	0.106	0.102	0.100	0.102	0
4'			0.104		
5	0.109	0.114	0.111	0.113	+0.88
5'			0.114		
6	0.112	0.118	0.116	0.116	1.72
7	0.213	0.213	0.205	0.210	1.43
7'			0.214		
8	0.220	0.228	0.219	0.222	2.70
8'			0.225		

9	0.224	0.236	0.229	0.229	3.06
10	0.334	0.340	0.332	0.332	2.41
10'			0.331		
11	0.344	0.360	0.351	0.351	2.56
11'			0.350		
12	0.355	0.375	0.362	0.362	3.59

Maximum Principal Stress (psi)

	Theoretical		Experimental		Percent difference for
point	$\mu=0$	$\mu=0.3$	recorded	average	$\mu=0.3$
2	10,112	10,150	10,421	10,412	-2.52
2'			10,402		
8	3,253	3,428	3,496	3,555	-3.57
8'			3,614		

The values of the minimum principal stresses determined by experiment did not check the calculated values nearly as closely as the corresponding values for the maximum stresses. These values are fairly small so that small error may make a considerable difference so that even the sign of the quantity may be effected.

References

1. V. P. Jensen, "Analysis of Skew Slabs", University of Illinois, Engineering Experiment Station, Bulletin Series No. 332, Vol XXXIX No. 3, Sept. 9, 1941.

2. H. Marcus, "Die Theorie elastischer Gewepe und ihre Anwending auf die Berechnung beiegsamer Platten", Julius Springer, Berlin 1932.

3. S. Timoshenko, "Theory of Plates and Shells", McGraw-Hill Book Co. 1940.

4. R. V. Southwell, "Relaxation Methods in Theoretical Physics", Clarendon Press, Oxford, 1946.

5. H. W. Emmons, "The Numerical Solution of Partial Differential Equations", Quarterly of Applied Mathematics, Vol II No. 3, Oct. 1944.

6. D. L. Holl, "Cantilever Plate with Concentrated Edge Load", Journal of Applied Mechanics, Vol. 4, No. 1, March 1937.

7. F. L. Ehasz, "Structural Skew Plates", Am. Soc. for Civil Engineers, Transactions Paper No. 2287, Vol III, p. 1011, 1946.

Table I

Tabulation of Deflection Relations for Rectangular Plates

fixed

free

1. Point adjacent to fixed edge.

$$21 w_0 - 8(w_N + w_E + w_S) + 2(w_{NE} + w_{SE}) + w_{NN} + w_{SS} + w_{EE} = \frac{P_0 \lambda^4}{D}$$

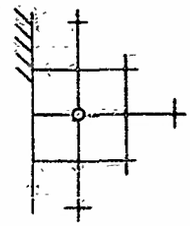

2. Point adjacent to fixed-free corner.

$$20 w_0 - 8(w_N + w_E) + (-6 + 2\mu) w_S + 2 w_{NE} + (2-\mu) w_{SE} + w_{NN} + w_{EE} = \frac{P_0 \lambda^4}{D}$$

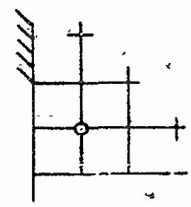

3. Point adjacent to fixed corner on free edge.

$$(17 - 8\mu - 5\mu^2) w_0 + (-12 + 4\mu) w_N + (-8 + 4\mu + 4\mu^2) w_E + (4 - 2\mu) w_{NE} + 2 w_{NN} + (1 - \mu^2) w_{EE} = \frac{P_0 \lambda^4}{D} + \frac{2\lambda^3}{D} (R_y)_0$$

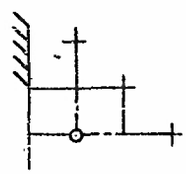

4. Point on free edge.

$$(16 - 8\mu - 6\mu^2) w_0 + (-12 + 4\mu) w_N + (-8 + 4\mu + 4\mu^2)(w_W + w_E) + (4 - 2\mu)(w_{NE} + w_{NW}) + (1 - \mu^2)(w_{WW} + w_{EE}) + 2 w_{NN} = \frac{P_0 \lambda^4}{D} + \frac{2\lambda^3}{D} (R_y)_0$$

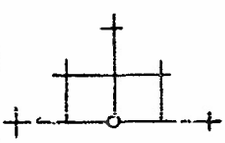

5. Point adjacent to free edge.

$$19 w_0 - 8(w_N + w_W + w_E) + (-6 + 2\mu) w_S + 2(w_{NE} + w_{NW}) + (2 - \mu)(w_{SE} + w_{SW}) + w_{NN} + w_{WW} + w_{EE} = \frac{P_0 \lambda^4}{D}$$

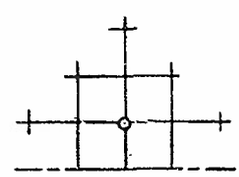

6. Point on free corner.

$$(12 - 8\mu - 4\mu^2) w_0 + (-12 + 8\mu + 4\mu^2)(w_N + w_W) + (8 - 8\mu) w_{NW} + (2 - 2\mu^2)(w_{NN} + w_{WW}) = \frac{P_0 \lambda^4}{D} + \frac{2\lambda^3}{D}[(R_x)_0 + (R_y)_0] + \frac{4R\lambda^2}{D}$$

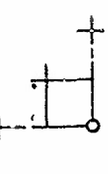

7. Point inside free-free corner.

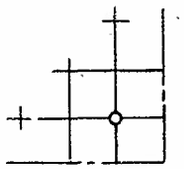

$$18\,w_o - 8(w_N + w_W) + (-6 + 2\mu)(w_E + w_S) + (2-\mu)(w_{NE} + w_{SW})$$
$$+ 2\,w_{NW} + (2 - 2\mu)\,w_{SE} + w_{WW} + w_{NN} = \frac{p_o \lambda^4}{D}$$

8. Point adjacent to free-free corner on free edge.

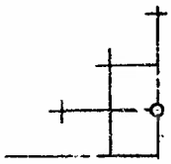

$$(15 - 8\mu - 4\mu^2)\,w_o + (-8 + 4\mu + 4\mu^2)\,w_N + (-6 + 4\mu + 2\mu^2)\,w_S$$
$$+ (-12 + 4\mu)\,w_W + (4 - 2\mu)(w_{NW} + w_{SW}) + (1 - \mu^2)\,w_{NN}$$
$$+ 2\,w_{WW} = \frac{p_o \lambda^4}{D} + \frac{2\lambda^3}{D}(R_x)_o$$

9. Inside point.

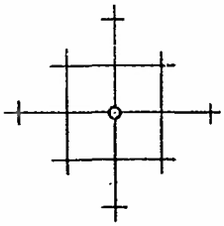

$$20\,w_o - 8(w_N + w_E + w_S + w_W) + 2(w_{NE} + w_{SE} + w_{SW} + w_{NE})$$
$$+ w_{NN} + w_{EE} + w_{SS} + w_{WW} = \frac{p_o \lambda^4}{D}$$

Table II

Deflection Relations for Rectangular Plates for $\mu = 0$

fixed

free

1. Point adjacent to fixed edge.

$$\frac{p_o\lambda^4}{D} =$$

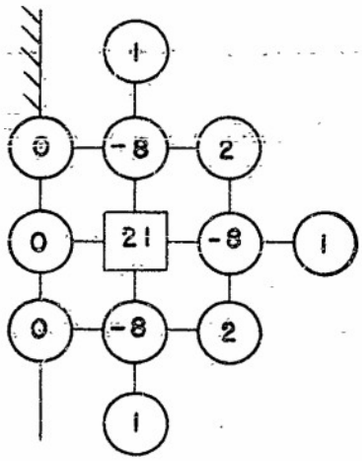

2. Point adjacent to fixed-free corner.

$$\frac{p_o\lambda^4}{D} =$$

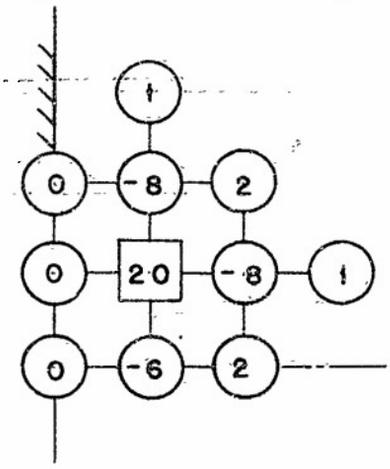

3. Point adjacent to fixed corner on free edge.

$$\frac{p_o\lambda^4}{D} + \frac{2\lambda^3}{D}(R_y)_o =$$

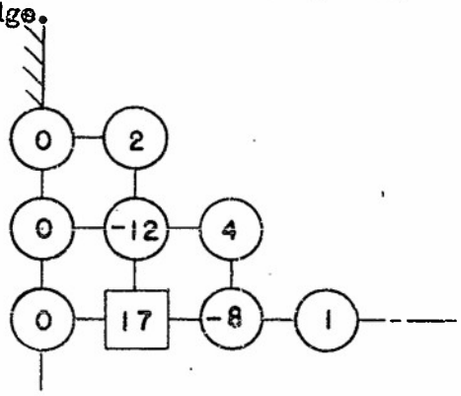

4. Point on free edge.

$$\frac{p_o\lambda^4}{D} + \frac{2\lambda^3}{D}(R_y)_o =$$

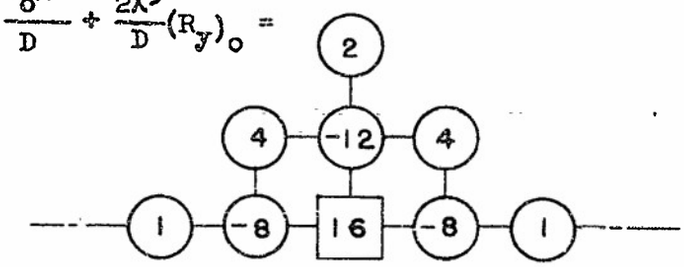

5. Point adjacent to free edge.

$$\frac{p_o\lambda^4}{D} =$$

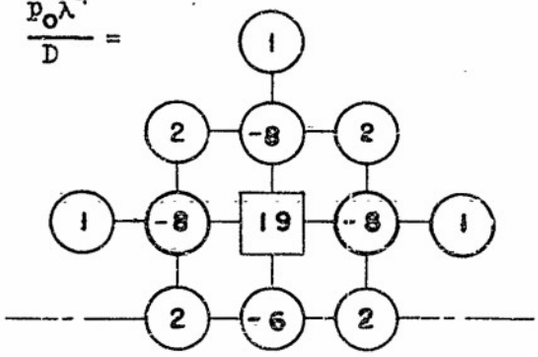

6. Point on free corner.

$$\frac{p_o\lambda^4}{D} + \frac{2\lambda^3}{D}\left[(R_x)_o + (R_y)_o\right] + \frac{4R\lambda^2}{D} =$$

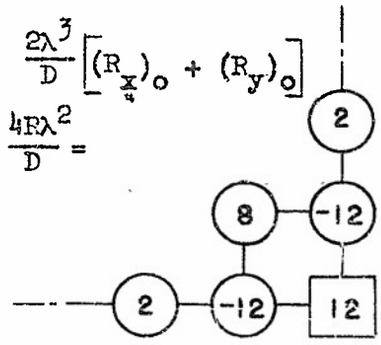

7. Point inside free-free corner.

$$\frac{p_o\lambda^4}{D} =$$

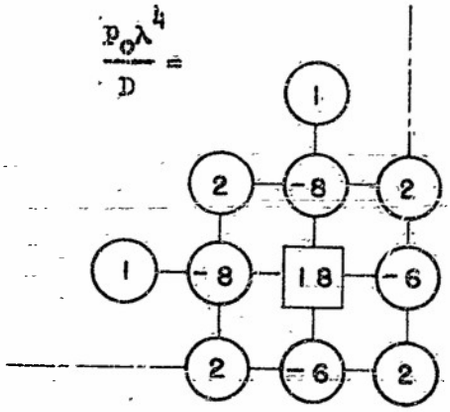

8. Point adjacent to free-free corner on free edge.

$$\frac{p_o\lambda^4}{D} + \frac{2\lambda^3}{D}(R_x)_o =$$

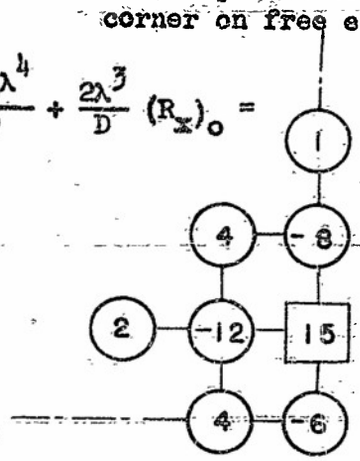

9. Inside point.

$$\frac{p_o\lambda^4}{D} =$$

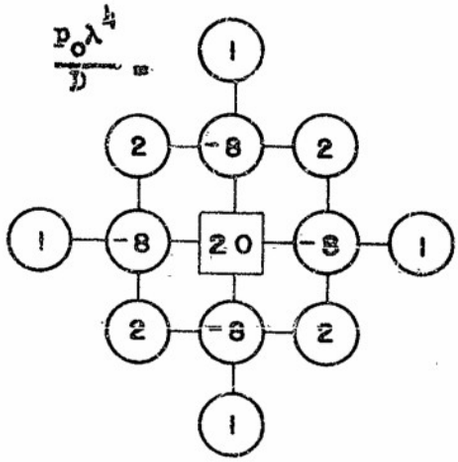

Table III

Deflection Relations for Rectangular Plates for $\mu = 0.3$

fixed
free

1. Point adjacent to fixed edge.

$$\frac{p_o\lambda^4}{D} =$$

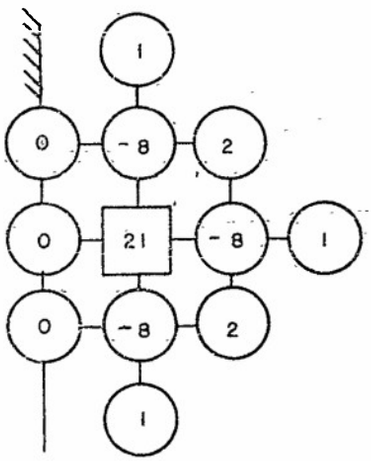

2. Point adjacent to fixed-free corner.

$$\frac{p_o\lambda^4}{D} =$$

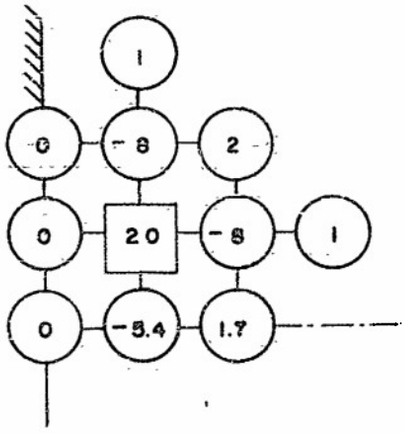

3. Point adjacent to fixed corner on free edge.

$$\frac{p_o\lambda^4}{D} + \frac{2\lambda^3}{D}(R_y)_o =$$

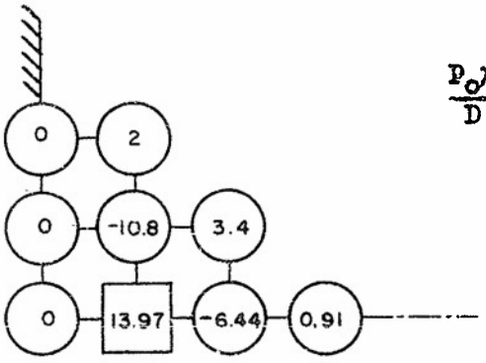

4. Point on free edge.

$$\frac{p_o\lambda^4}{D} + \frac{2\lambda^3}{D}(R_y)_o =$$

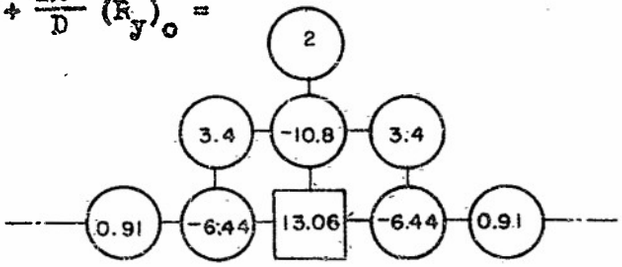

5. Point adjacent to free edge.

$$\frac{p_o\lambda^4}{D} =$$

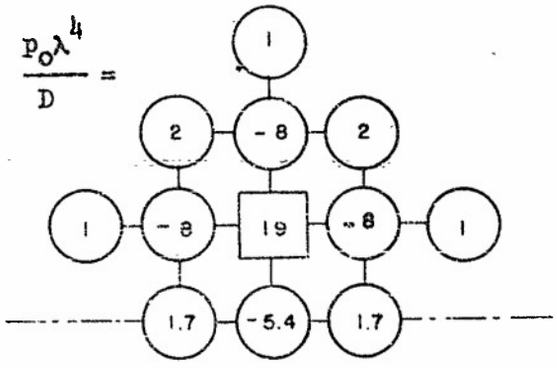

6. Point on free corner.

$$\frac{p_o\lambda^4}{D} + \frac{2\lambda^3}{D}\left[(R_x)_o + (R_y)_o\right] + \frac{4R\lambda^2}{D} =$$

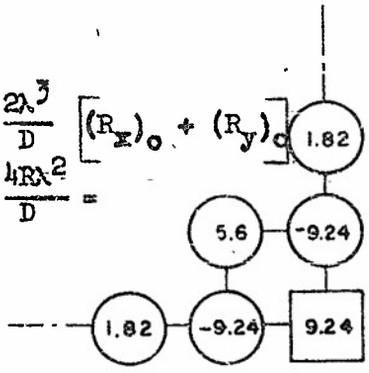

7. Point inside free-free corner.

$$\frac{p_o\lambda^4}{D} =$$

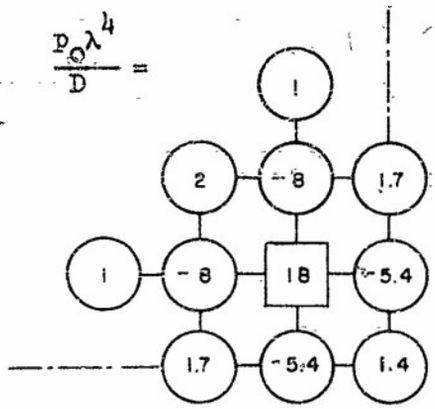

8. Point adjacent to free-free corner on free edge.

$$\frac{p_o\lambda^4}{D} + \frac{2\lambda^3}{D}(R_x)_o =$$

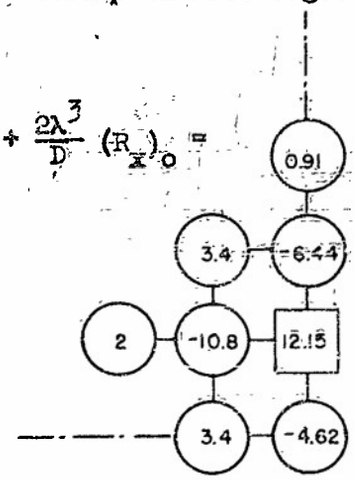

9. Inside point.

$$\frac{p_o\lambda^4}{D} =$$

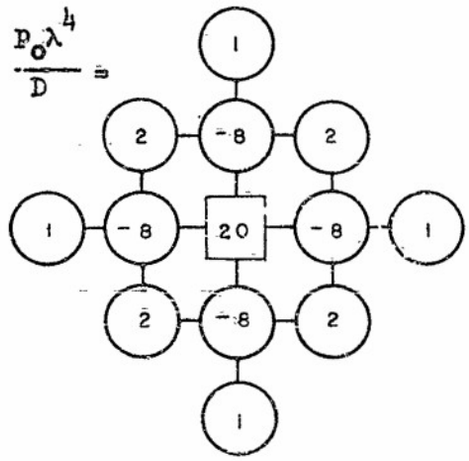

Table IV

Expressions for Moments, Shears and Reactions.

Fixed

Free

1. Point on fixed edge.

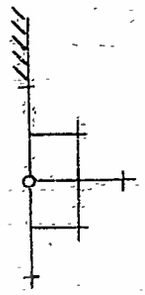

$$M_x = -\frac{2D}{\lambda^2}\, w_E$$

$$M_y = -\frac{2D}{\lambda^2}\, \mu\, w_E$$

$$M_{xy} = 0$$

$$Q_x = R_x = -\frac{D}{2\lambda^3}\left[-16\, w_E + 4(w_{NE} + w_{SE}) + 2\, w_{EE}\right]$$

$$Q_y = -\frac{D}{\lambda^3}\,(w_{SE} - w_{NE})$$

2. Point on fixed edge near fixed-free corner.

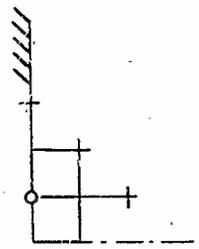

$$M_x = -\frac{2D}{\lambda^2}\, w_E$$

$$M_y = -\frac{2D}{\lambda^2}\, \mu\, w_E$$

$$M_{xy} = 0$$

$$Q_x = R_x = -\frac{D}{2\lambda^3}\left[-16\, w_E + 4(w_{NE} + w_{SE}) + 2\, w_{EE}\right]$$

$$Q_y = -\frac{D}{\lambda^3}\,(w_{SE} - w_{NE})$$

3. Point at fixed-free corner.

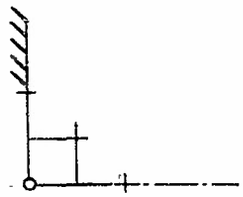

$$M_x = -\frac{2D}{\lambda^2}\, w_E$$

$$M_y = -\frac{2D}{\lambda^2}\, \mu\, w_E$$

$$M_{xy} = 0$$

$$Q_x = R_x = \frac{-D}{2\lambda^3}\left[(-16 + 4\mu + 4\mu^2)\, w_E + (8 - 4\mu)\, w_{NE} + (2 - 2\mu^2)\, w_{EE}\right]$$

$$R_y = 0$$

4. Point adjacent to fixed edge.

$$M_x = -\frac{D}{\lambda^2}\left[-(2+2\mu)w_0 + w_E + \mu(w_N + w_S)\right]$$

$$M_y = -\frac{D}{\lambda^2}\left[-(2+2\mu)w_0 + w_N + w_S + \mu w_E\right]$$

$$M_{xy} = \frac{D(1-\mu)}{4\lambda^2}\left[w_{SE} - w_{NE}\right]$$

$$Q_x = -\frac{D}{2\lambda^3}\left[-w_0 - 4w_E + w_{NE} + w_{SE} + w_{EE}\right]$$

$$Q_y = -\frac{D}{2\lambda^3}\left[4(w_N - w_S) + w_{SE} - w_{NE} - w_{NN} + w_{SS}\right]$$

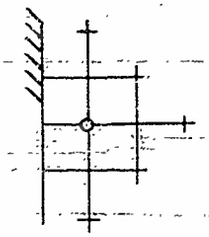

5. Point inside fixed-free corner.

$$M_x = -\frac{D}{\lambda^2}\left[-(2+2\mu)w_0 + w_E + \mu(w_N + w_S)\right]$$

$$M_y = -\frac{D}{\lambda^2}\left[-(2+2\mu)w_0 + w_N + w_S + \mu w_E\right]$$

$$M_{xy} = \frac{D(1-\mu)}{4\lambda^2}\left(w_{SE} - w_{NE}\right)$$

$$Q_x = -\frac{D}{2\lambda^3}\left[-w_0 - 4w_E + w_{NE} + w_{SE} + w_{EE}\right]$$

$$Q_y = -\frac{D}{2\lambda^3}\left[-w_0 + 4w_N + (-2+2\mu)w_S + (1-\mu)w_{SE} - w_{NE} - w_{NN}\right]$$

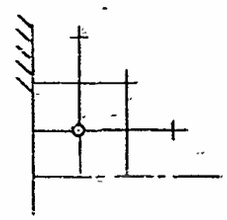

6. Point on free edge adjacent to fixed-free corner.

$$M_x = -\frac{D}{\lambda^2}(1-\mu^2)(w_E - 2w_0)$$

$$M_y = 0$$

$$M_{xy} = \frac{D(1-\mu)}{4\lambda^2}\left[-2w_{NE} + (2+2\mu)w_E - \mu w_0 - \mu w_{EE}\right]$$

$$Q_x = -\frac{D}{2\lambda^3}\left[-(1+\mu)w_0 + (-2+2\mu)w_E + (1-\mu)w_{EE}\right]$$

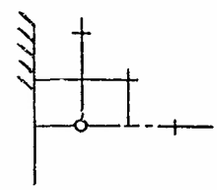

7. Point on free edge.

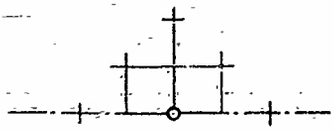

$$M_x = -\frac{D}{\lambda^2}(1-\mu^2)(-2w_o + w_W + w_E)$$

$$M_y = 0$$

$$M_{xy} = \frac{-D(1-\mu)}{4\lambda^2}\left[(2+2\mu)(w_E - w_W) + 2(w_{NW} - w_{NE}) + \mu(w_{WW} - w_{EE})\right]$$

$$Q_x = -\frac{D}{2\lambda^3}\left[(2-2\mu)(w_W - w_E) - (1-\mu)(w_W - w_{EE})\right]$$

8. Point on free edge adjacent to free-free corner.

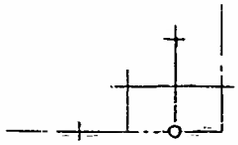

$$M_x = -\frac{D}{\lambda^2}(1-\mu^2)\left[-2w_o + w_W + w_E\right]$$

$$M_y = 0$$

$$M_{xy} = \frac{D}{4\lambda^2}(1-\mu)\left[\mu w_o - (2+2\mu)w_W + 2(w_E - w_{NE} + w_{NW}) + \mu w_{WW}\right]$$

$$Q_x = -\frac{D}{2\lambda^3}\left[(2-2\mu)w_W - (1-\mu)(w_o + w_{WW})\right]$$

9. Point on free-free corner.

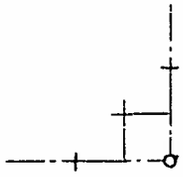

$$M_x = 0$$

$$M_y = 0$$

$$M_{xy} = \frac{D}{4\lambda^2}\left[(-6+4\mu+2\mu^2)(w_N + w_W - w_o) + (1-\mu^2)(w_{NN} + w_{WW}) + (4-4\mu)w_{NW}\right]$$

10. Point inside free-free corner.

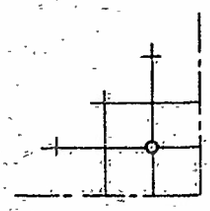

$$M_x = -\frac{D}{\lambda^2}\left[-(2+2\mu)w_0 + w_W + w_E + \mu(w_N + w_S)\right]$$

$$M_y = -\frac{D}{\lambda^2}\left[-(2+2\mu)w_0 + w_N + w_S + \mu(w_W + w_E)\right]$$

$$M_{xy} = \frac{D(1-\mu)}{4\lambda^2}\left[w_{SE} - w_{NE} - w_{SW} + w_{NW}\right]$$

$$Q_x = -\frac{D}{2\lambda^3}\left[-w_0 + 4w_W + (-2+2\mu)w_E + (1-\mu)(w_{NE} + w_{SE}) - (w_{NW} + w_{SW}) - w_{WW}\right]$$

$$Q_y = -\frac{D}{2\lambda^3}\left[-w_0 + 4w_N + (-2+2\mu)w_S + (1-\mu)(w_{SE} + w_{SW}) - (w_{NW} + w_{NE}) - w_{NN}\right]$$

11. Point adjacent to free edge.

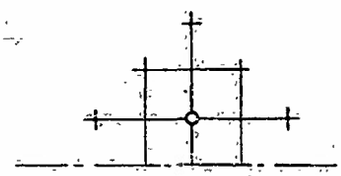

$$M_x = -\frac{D}{\lambda^2}\left[-(2+2\mu)w_0 + w_W + w_E + \mu(w_N + w_S)\right]$$

$$M_y = -\frac{D}{\lambda^2}\left[-(2+2\mu)w_0 + w_N + w_S + \mu(w_E + w_W)\right]$$

$$M_{xy} = \frac{D(1-\mu)}{4\lambda^2}\left[w_{SE} - w_{NE} - w_{SW} + w_{NW}\right]$$

$$Q_x = -\frac{D}{2\lambda^3}\left[4(w_W - w_E) + w_{NE} + w_{SE} - w_{NW} - w_{SW} - w_{WW} + w_{EE}\right]$$

$$Q_y = -\frac{D}{2\lambda^3}\left[-w_0 + 4w_N + (-2+2\mu)w_S - w_{NW} - w_{NE} + (1-\mu)(w_{SE} + w_{SW}) - w_{NN}\right]$$

12. Interior point.

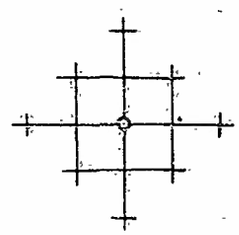

$$M_x = -\frac{D}{\lambda^2}\left[-(2+2\mu)w_0 + w_W + w_E + \mu(w_N + w_S)\right]$$

$$M_y = -\frac{D}{\lambda^2}\left[-(2+2\mu)w_0 + w_N + w_S + \mu(w_W + w_E)\right]$$

$$M_{xy} = \frac{D(1-\mu)}{4\lambda^2}\left[w_{SE} - w_{NE} - w_{SW} + w_{NW}\right]$$

$$Q_x = -\frac{D}{2\lambda^3}\left[4(w_W - w_E) + w_{NE} + w_{SE} - w_{NW} - w_{SW} - w_{WW} + w_{EE}\right]$$

$$Q_y = -\frac{D}{2\lambda^3}\left[4(w_N - w_S) + w_{SE} + w_{SW} - w_{NW} - w_{NE} - w_{NN} + w_{SS}\right]$$

DISTRIBUTION LIST

1.-2. Chief, Bureau of Ordnance
(Attn: Comdr. H. M. Mott-Smith, Re9d)
Comdr. L. M. Pooler, Re9g)
3. H. H. Porter
4. F. K. Hill
5. N. Edmonson
6. E. A. Bonney
7. A. G. Ennis
8. C. W. Besserer
9. A. C. Beer
10. R. F. Petersen
11. W. F. Hilton
12. A. R. Eaton, Jr.
13. R. O. Fredette
14. J. E. Cook
15. G. N. Warfield
16. Wendell Smith
17. I. D. V. Faro
18. A. C. Office
(E. F. Smellie)
19-21. Consolidated Vultee Aircraft
(A. W. Abels-2)
(J. E. Arnold)
22-24. Cornell Aeronautical Lab.
(R. Schedvin)
(A. F. Donovan)
(A. H. Flax)
25-26. Curtiss-Wright Corporation
(B. G. Eaton)
(C. D. Pengelley)
27. Johns Hopkins Univ. (Baltl)
(E. H. Clauser)
28-29. Michigan, University of
(A. M. Kuethe)
(W. C. Nelson)
30. North American Aviation, Inc.
(R. J. Lew)
31. New Mexico School of Mines
(F. R. Sweet)
32-33. Texas, University of
(C. P. Boner)
34. Virginia, University of
(J. W. Beams)
35-37. BB Reports (ABC)
38-42. BB Reserve (FGS)
43-52. BB Reserve (APL)
53. APL Problem Sponsor
(T. K. Riggs)
54. Contract Representative
(W. F. Green)
55. California Institute of Technology
(E. E. Sechler)
56. Douglas Aircraft, Santa Monica
(C. R. Strang)
57. RAND, Santa Monica
(J. E. Lipp)
58. Colorado, University of
(K. D. Wood)
59. Illinois, University of
(Henry Stillwell)
60. DCO/UT
(T. K. Ewan)
61. M. J. Thompson
62. D. Young
63. J. W. Dalley
64. M. V. Barton
65. R. E. Wilson
66. F. N. Stuve
67-69. DRL Reports
70-79. DRL Reserve