Reproduced by

CADO

CENTRAL AIR DOCUMENTS OFFICE

WRIGHT-PATTERSON AIR FORCE BASE - DAYTON, OHIO

REEL-C 4005B

A.T.I 84165

The U.S. GOVERNMENT

IS ABSOLVED

FROM ANY LITIGATION WHICH MAY ENSUE FROM ANY INFRINGEMENT ON DOMESTIC OR FOREIGN PATENT RIGHTS WHICH MAY BE INVOLVED.

UNCLASSIFIED

The Scattering of Plane Electromagnetic Waves by a Perfectly Conducting Hemisphere or Hemispherical Shell (Project Report) 84 165

(None)

Kennaugh, Edward M.
Ohio State University Research Foundation, Columbus 302-35
(Same) for Signal Corps Engineering Labs., Fort Monmouth, N. J.

May '50 Unclass. U.S. English 18 diagr (Same)

The scattering of plane electromagnetic waves by a perfectly conducting hemispherical shell or solid hemisphere, is computed. Assuming a plane wave of arbitrary polarization and angle of incidence, where the ratio of wavelength to physical size is unrestricted, a formal solution is obtained for the general case, in the form of an infinite set of linear equations in the unknown field coefficients. The exact form of the diffraction pattern produced by electromagnetic waves falling upon a body of finite size is of interest in the calibration of radar equipment.

Copies obtainable from CADO.

Electromagnetic waves - Scattering
Radar equipment - Testing
Calibration, Electronic

Electronics (3)
Electronic Theory (12)
Electronics (3)
Radar (2)

USA Contr. No. W36-039-sc-33614

Air Documents Division, T-2
AMC, Wright Field
Microfilm
R4065 F

COPY

The Antenna Laboratory

Department of Electrical Engineering

UNCLASSIFIED

The Scattering of Plane Electromagnetic Waves by a Perfectly Conducting Hemisphere or Hemispherical Shell

Contract W 36-039 sc33634
Department of the Army Project: 3-99-05-022
Signal Corps Project: 122B-0
EVANS SIGNAL LABORATORY, BELMAR, NEW JERSEY
302-35 May 15, 1950

The Ohio State University
Research Foundation
Columbus, Ohio

SIGNAL CORPS ENGINEERING LABORATORIES
EVANS SIGNAL LABORATORY
BELMAR, NEW JERSEY

Title of Report Echoing Area of Objects

Progress Report No. 302-35 covering period 15 May 1950

Contract No. W-36-039-sc-53634

Name of Contractor The Ohio State University, Columbus, Ohio

Total Number of Copies Received: 60

DISTRIBUTION LIST

Complete Address	No. of Copies
Contract Advisor	1
Chief, Radar Branch and File in Room 3007, ESL	2
Director of Engineering, Hqs., SCEL	3
Contract File, Room 3005, ESL	4
Chief, Engineering and Technical Division, SIGGE-2, Office Chief Signal Officer, Washington 25, D.C. ATTN: Mr. Norman Abbott.	5
Technical Reports Library, ESL	6
Director, Naval Research Laboratory, Washington 20, D.C. ATTN: Code 2020.	7
Commanding General, AMC, Wright-Patterson Air Force Base, Dayton, Ohio. ATTN: MCREEO-2.	8
Commanding Officer, 3151st Electronics Station, Watson Laboratories, AMC, Red Bank, N.J.	9
Commanding Officer, 3180 Electronic Station, Air Force Cambridge Research Laboratory, 230 Albany Street, Cambridge 39, Mass. ATTN: ERCRD.	10
Circulation, Radar Branch, ESL	11
AFF Liaison Officer, ESL	12,13,14
Commanding General, Hqs., AMC, Wright-Patterson Air Force Base, Dayton, Ohio.	15
Director of Research, Hqs., SCEL. ATTN: Mr. V.L.Friedrich.	16
Chief, Engineering and Technical Division, SIGTM-S, Office of the Chief Signal Officer, Washington 25, D.C.	17,18
Applied Physics Laboratory of John Hopkins University, 8621 Georgia Ave., Silver Springs, Maryland. ATTN: Dr. D.E.Gray.	19
British Supply Office, 1785 Massachusetts Avenue, N.W., Washington 25, D.C.	20
Naval Electronics Laboratory, San Diego 52, Calif. ATTN: H.R.Bryan, Code 434.	21
Chief of the Bureau of Ships, Washington 25, D.C. ATTN: Code 827.	22
Commanding General, AMC, Wright-Patterson Air Force Base, Dayton, Ohio, Ohio. ATTN: MCREON-9.	23
Dr. C.R. Haupt, Head Radio-Radar Division, U.S. Navy Electronic Lab., San Diego 52, Calif.	24

Complete Address	No. of Copies
Commander, Naval Ordnance Laboratory, White Oak Silver Spring, 19, Maryland. ATTN: Library.	25
Chief Bureau of Ordnance, Department of the Navy, Washington 25, D.C. ATTN: Re47.	26
Commanding Officer, 3180 Electronics Station, Air Force Cambridge Research Laboratory, 230 Albany Street, Cambridge 39, Massachusetts. ATTN: WLCAL, Mr. Roy C. Spencer.	27
Mr. Van Nuys, Chief, Spec. & Drafting Branch, ESL	28
Mail & Records, ESL	29
Chief, of Naval Research, c/o Science and Technology Project, Library of Congress, Washington 25, D.C.	30,31
Los Angles Ordnance District, 55 North Raymond Avenue, Pasadena, 1 Calif.	32
Canadian Army Staff, 1700 Massachusetts Avenue, N.W., Washington 25, D.C. ATTN: Major Fred E. Raney.	33
Commander, Naval Proving Ground, U.S. Naval Proving Ground, Dahlgren, Virginia.	34
Mr. Woodyard, Radar Branch, ESL	35
Central Air Documents Office, Wright-Patterson Air Force Base, Dayton, Ohio. ATTN: CADO-D.	36

This contract is supervised by Radar Branch, Evans Signal Laboratory, Signal Corps Engineering Laboratories. For further technical information contact Mr. J.T.Evers, Radar Equipment Section, Evans Signal Laboratory, Belmar, N.J. Telephone Asbury Park 2-7449, Ext. 515. Contracting Officer's Representatives Mr. A.L.Vieweger and Mr. L.J. Volp, Radar Branch, Evans Signal Laboratory.

PROJECT REPORT 302-35

COPY NO. 36

R E P O R T

by

THE OHIO STATE UNIVERSITY RESEARCH FOUNDATION

COLUMBUS 10, OHIO

Cooperator	Evans Signal Laboratory Belmar, New Jersey Department of the Army Project: 3-99-05-022 Signal Corps Project: 122B-0
Contract	W 36-039 sc33634
Report Subject	The Scattering of Plane Electromagnetic Waves By a Perfectly Conducting Hemisphere Or Hemispherical Shell
Submitted by	Edward M. Kennaugh, Antenna Laboratory Department of Electrical Engineering
Date	May 15, 1950

THE SCATTERING OF PLANE ELECTROMAGNETIC WAVES

BY A PERFECTLY CONDUCTING HEMISPHERE OR HEMISPHERICAL SHELL

INTRODUCTION	1
EXPANSION OF PLANE WAVE	1
THE HEMISPHERICAL SHELL	8
THE SOLID HEMISPHERE	13
CALCULATION OF COEFFICIENTS	16
GLOSSARY OF SYMBOLS	17

THE SCATTERING OF PLANE ELECTROMAGNETIC WAVES BY A PERFECTLY CONDUCTING HEMISPHERE OR HEMISPHERICAL SHELL

INTRODUCTION

The exact form of the diffraction pattern produced by electromagnetic waves falling upon a body of finite size is of interest in the calibration of radar equipment. At the present time, to the author's knowledge, the only finite object for which this pattern is known for all angles of incidence is the sphere. Solutions have been obtained for other finite bodies which are valid for certain directions and polarizations of the incident wave, as well as many approximations when the ratio of wavelength to physical dimensions is very large or very small. This investigation deals with the scattering by a hemispherical shell or solid hemisphere for a plane wave of arbitrary polarization and angle of incidence, where the ratio of wavelength to physical size is unrestricted. A formal solution is obtained for the general case, in the form of an infinite set of linear equations in the unknown field coefficients.

EXPANSION OF PLANE WAVE

Maxwell's equations in free space may be written:

$$\begin{aligned} &\text{a.}\quad \underline{\nabla} \times \underline{E} + \dot{\underline{B}} = 0 && \text{b.}\quad \underline{\nabla} \cdot \underline{B} = 0 \\ &\text{c.}\quad \underline{\nabla} \times \underline{H} - \dot{\underline{D}} = 0 && \text{d.}\quad \underline{\nabla} \cdot \underline{D} = 0 \end{aligned} \tag{1}$$

Since $\underline{B}$ and $\underline{D}$ are divergence-less, either may be expressed as the curl of a vector or of the time-derivative of a vector. Choosing $\underline{B}$, let

$$\underline{B} = \mu\epsilon\, \underline{\nabla} \times \dot{\underline{\Pi}} \quad . \tag{2}$$

Substituting in a,

$$\underline{\nabla} \times (\underline{E} + \mu\epsilon\, \ddot{\underline{\Pi}}) = 0 \ , \tag{3}$$

or $\underline{E} = \underline{\nabla}\Phi - \mu\epsilon\, \ddot{\underline{\Pi}}$, where Φ is an arbitrary scalar. Substituting in c: (4)

$$\begin{aligned} \frac{\partial}{\partial t} (\underline{\nabla} \times \underline{\nabla} \times \underline{\Pi} - \underline{\nabla}\Phi + \mu\epsilon\, \ddot{\underline{\Pi}}) &= 0 \\ \underline{\nabla} \times \underline{\nabla} \times \underline{\Pi} - \underline{\nabla}\Phi + \mu\epsilon\, \ddot{\underline{\Pi}} &= 0 \quad . \end{aligned} \tag{5}$$

Taking the divergence of eq. (5), the divergence condition d is seen to be satisfied.

If $\underline{\Pi}$ is a radial vector in spherical coordinates, then $\underline{\Pi} = \underline{i}_1 \Pi$, where $\underline{i}_1$ is a unit radial vector and Π is a scalar. Eq. (1) may then be written as three separate equations:

$$\underline{i}_1 \left[\frac{1}{r^2 \sin\theta} \left(\frac{\partial}{\partial \theta} \left(\sin\theta \frac{\partial \Pi}{\partial \theta} \right) + \frac{1}{\sin\theta} \frac{\partial^2 \Pi}{\partial \phi^2} \right) + \frac{\partial \Phi}{\partial r} + \mu\epsilon \ddot{\Pi} \right] = 0 \tag{6}$$

$$\underline{i}_2 \left[\frac{1}{r} \frac{\partial^2 \Pi}{\partial r \partial \theta} - \frac{1}{r} \frac{\partial \Phi}{\partial \theta} \right] = 0 \tag{7}$$

$$\underline{i}_3 \left[\frac{1}{r \sin\theta} \frac{\partial^2 \Pi}{\partial r \partial \phi} - \frac{1}{r \sin\theta} \frac{\partial \Phi}{\partial \phi} \right] = 0 \, . \tag{8}$$

If the arbitrary scalar Φ be chosen so that $\Phi = \frac{\partial \Pi}{\partial r}$, then two of the equations are satisfied, and the remaining one becomes:

$$\frac{\partial^2 \Pi}{\partial r^2} + \frac{1}{r^2 \sin\theta} \frac{\partial}{\partial \theta} \left(\sin\theta \frac{\partial \Pi}{\partial \theta} \right) + \frac{1}{r^2 \sin\theta} \frac{\partial^2 \Pi}{\partial \phi^2} - \mu\epsilon \ddot{\Pi} = 0 \, . \tag{9}$$

If $\Pi = ru$, this is simply the scalar wave equation in spherical coordinates.

To return to Maxwell's equations, another independent vector solution may be constructed by expressing $\underline{D}$ as the curl of a time-derivative of a vector. Thus, if

$$\underline{D} = -\mu\epsilon \, \underline{\nabla} \times \dot{\underline{\Pi}}^* , \tag{10}$$

then

$$\underline{H} = \underline{\nabla} \Phi^* - \mu\epsilon \ddot{\underline{\Pi}}^* , \tag{11}$$

where Φ^* is an arbitrary scalar. Substituting in a,

$$\begin{gathered} \frac{\partial}{\partial t} \left(\underline{\nabla} \times \underline{\nabla} \times \underline{\Pi}^* - \underline{\nabla} \Phi^* + \mu\epsilon \ddot{\underline{\Pi}}^* \right) = 0 \\ \underline{\nabla} \times \underline{\nabla} \times \underline{\Pi}^* - \underline{\nabla} \Phi^* + \mu\epsilon \ddot{\underline{\Pi}}^* = 0 \end{gathered} \tag{12}$$

$\underline{\Pi}^*$ satisfies the same vector equation as $\underline{\Pi}$, but since the vector operations performed on each one to obtain the field components are not the same, they are independently related to the field.

If $\underline{\Pi}^*$ is a radial vector in spherical coordinates, $\underline{\Pi}^* = \underline{i}_1 \Pi^*$, eq. (12) becomes three scalar equations similar to those obtained from eq. (5). Choosing $\Phi^* = \frac{\partial \Pi^*}{\partial r}$, two equations are satisfied, and the remaining one becomes the scalar wave equation in spherical coordinates, where $\Pi^* = rv$.

If the time variation of Π is expressed in the usual manner by use of the relation $\Pi = \Pi e^{-i\omega t}$, where Π is independent of time, then the scalar wave equation becomes

$$\nabla^2 u + k^2 u = 0 ,$$

where (13)

$$\Pi = ru, \; k = \frac{2\pi}{\lambda} .$$

Solutions of the scalar wave equation in spherical coordinates are of the form:

$$u_{nm} = [a_{nm} j_n (kr) + b_{nm} h_n (kr)] P_n^m (\cos \theta) (\cos m\phi + c_{nm} \sin m\phi) ,$$

$$\Pi = r \sum_n \sum_m u_{nm} . \tag{14}$$

To relate the components of the $\underline{\Pi}$-derived field to the scalar Π, recall that $\underline{E} = \underline{\nabla}\Phi - \mu\epsilon \ddot{\underline{\Pi}}$

$$E_r = \frac{\partial^2 \Pi}{\partial r^2} + k^2 \Pi$$

$$E_\theta = \frac{1}{r} \frac{\partial^2 \Pi}{\partial r \, \partial \theta} \tag{15}$$

$$E_\phi = \frac{1}{r \sin \theta} \frac{\partial^2 \Pi}{\partial r \, \partial \phi} ,$$

and $\underline{B} = \mu\epsilon \underline{\nabla} \times \dot{\underline{\Pi}}$

$$B_r = 0$$

$$B_\theta = \frac{-ik}{cr \sin \theta} \frac{\partial \Pi}{\partial \phi} \tag{16}$$

$$B_\phi = \frac{ik}{cr} \frac{\partial \Pi}{\partial \theta} .$$

Since the radial component of the magnetic field is everywhere zero, this field is termed transverse magnetic.

If the time-variation of Π^* is specified in the same manner as that of Π, and $\Pi^* = \Pi^* e^{-i\omega t}$, where Π^* is independent of time, the components of the $\underline{\Pi}^*$-derived field

are related to the scalar Π^* by $\underline{H} = \underline{\nabla}\dot{\Phi}^* - \mu\epsilon\,\ddot{\underline{\Pi}}^*$

$$H_r = \frac{\partial^2 \Pi^*}{\partial r^2} + k^2 \Pi^*$$

$$H_\theta = \frac{1}{r}\frac{\partial^2 \Pi^*}{\partial r\,\partial \theta} \tag{17}$$

$$H_\phi = \frac{1}{r \sin\theta}\frac{\partial^2 \Pi^*}{\partial r\,\partial \phi} ,$$

and $\underline{D} = -\mu\epsilon\,\underline{\nabla} \times \dot{\underline{\Pi}}^*$

$$D_r = 0$$

$$D_\theta = \frac{ik}{cr \sin\theta}\frac{\partial \Pi^*}{\partial \phi} \tag{18}$$

$$D_\phi = \frac{-ik}{cr}\frac{\partial \Pi^*}{\partial \theta} .$$

Since the radial component of electric field is everywhere zero, this field is termed transverse electric.

For the problem at hand, the field components of the incident plane wave are known, and therefore can be separated into independent transverse electric and transverse magnetic components, and the corresponding Π^* and Π vectors determined. The total field, incident plus scattered, can be considered in two parts, one of a transverse magnetic type excited by the transverse magnetic component of the incident plane wave alone, and the other of a transverse electric type, excited by the transverse electric component of the incident field alone. The advantage of this method of approach lies in the fact that a single complex field problem is broken down into two simpler field problems, and each treated separately.

Consider a linearly polarized plane electromagnetic wave traveling toward the origin of a spherical coordinate system along a radial line in the plane $\phi = 0$ making an angle α with the polar axis, as in Fig. 1. The electric vector of the wave lies in the plane $\phi = 0$. In rectangular coordinates, located as shown in Fig. 1,

$$E_x = -E_o\, e^{-ikr\cos\gamma} \cos\alpha \qquad H_x = 0$$

$$E_y = 0 \qquad H_y = H_o\, e^{-ikr\cos\gamma} \tag{19}$$

$$E_z = E_o\, e^{-ikr\cos\gamma} \sin\alpha \qquad H_z = 0 ,$$

the time factor $e^{-i\omega t}$ being neglected, where E_o and H_o are the magnitudes of the electric

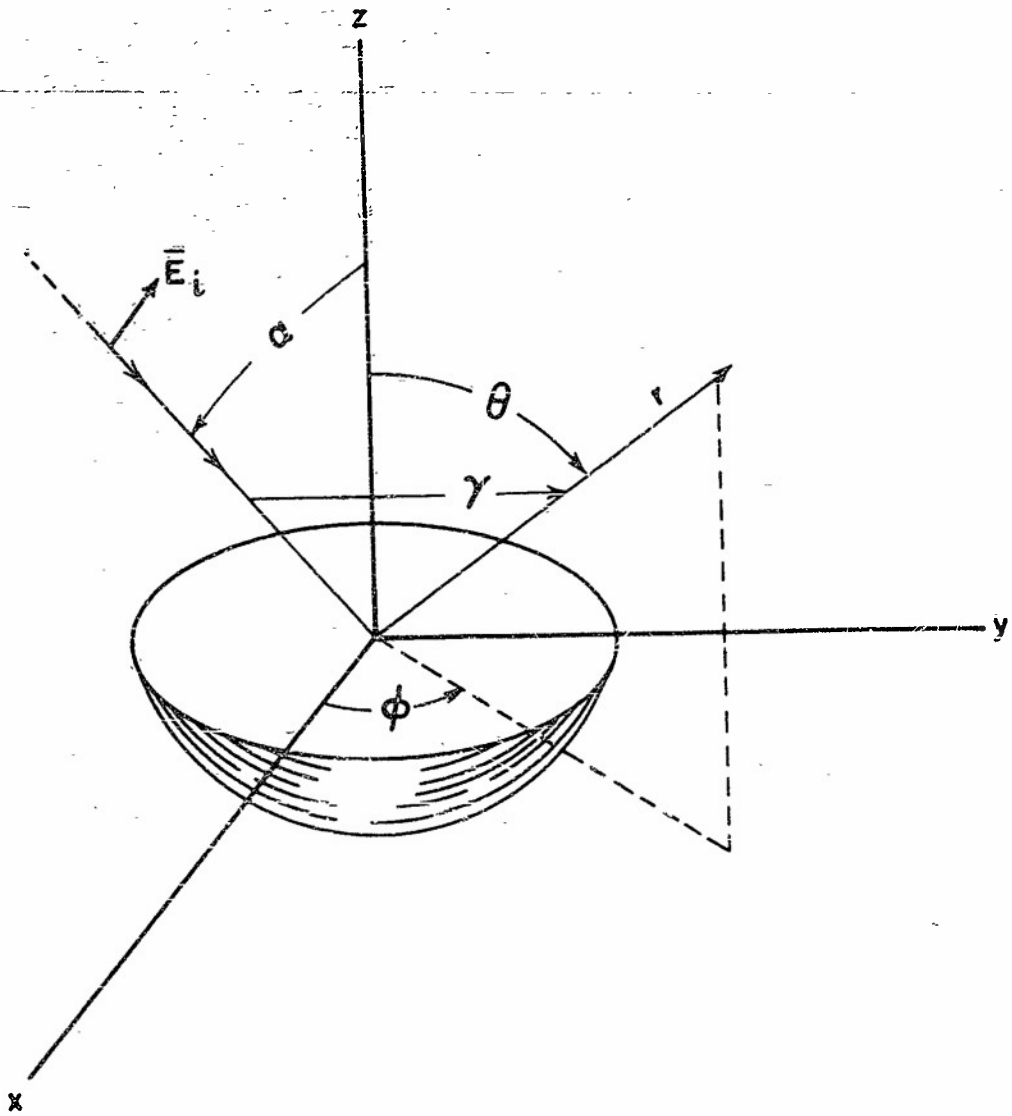

Fig. 1. Coordinate System.

and magnetic components of the plane wave, and γ is related to θ, ϕ, and α by

$$\cos\gamma = \sin\alpha \sin\theta \cos\phi + \cos\alpha \cos\theta \,. \tag{20}$$

The transformation of the field components from rectangular to spherical coordinates is given by:

$$\begin{aligned} E_r &= E_x \cos\phi \sin\theta + E_y \sin\phi \sin\theta + E_z \cos\theta \\ H_r &= H_x \cos\phi \sin\theta + H_y \sin\phi \sin\theta + H_z \cos\theta \,. \end{aligned} \tag{21}$$

For the plane wave, these become:

$$\begin{aligned} E_r &= E_o \left(\sin\alpha \cos\theta - \cos\alpha \cos\phi \sin\theta\right) e^{-ikr\cos\gamma} \\ H_r &= H_o \sin\phi \sin\theta \, e^{-ikr\cos\gamma} \,, \end{aligned} \tag{22}$$

which may be written more compactly as derivatives of the exponential:

$$\begin{aligned} E_r &= \frac{E_o}{ikr} \frac{\partial}{\partial \alpha} \left(e^{-ikr\cos\gamma}\right) \\ H_r &= \frac{H_o}{ikr \sin\alpha} \frac{\partial}{\partial \phi} \left(e^{-ikr\cos\gamma}\right) \end{aligned} \tag{23}$$

If the plane wave is to be represented as the sum of a field of transverse magnetic type and one of transverse electric type,

$$\begin{aligned} E_r &= \frac{\partial^2 \Pi}{\partial r^2} + k^2 \Pi \\ H_r &= 0 \end{aligned} \tag{24}$$

for the transverse magnetic field, and

$$\begin{aligned} E_r &= 0 \\ H_r &= \frac{\partial^2 \Pi^*}{\partial r^2} + k^2 \Pi^* \end{aligned} \tag{25}$$

for the transverse electric field. Therefore, the scalar quantities Π and Π^* will be given by:

$$\frac{\partial^2 \Pi}{\partial r^2} + k^2 \Pi = \frac{E_o}{ikr} \frac{\partial}{\partial \alpha} \left(e^{-ikr\cos\gamma}\right) \tag{26}$$

$$\frac{\partial^2 \Pi^*}{\partial r^2} + k^2 \Pi^* = \frac{H_o}{ikr \sin\alpha} \frac{\partial}{\partial \phi} \left(e^{-ikr\cos\gamma}\right) . \tag{27}$$

The expansion of $e^{-ikr\cos\gamma}$ is well known:

$$e^{-ikr\cos\gamma} = \sum_{n=0}^{\infty} (-i)^n (2n+1)\, j_n(kr) \left[P_n(\cos\alpha)\, P_n(\cos\theta) + 2 \sum_{m=1}^{n} \frac{(n-m)!}{(n+m)!} P_n^m(\cos\alpha)\, P_n^m(\cos\theta) \cos m\phi \right] \tag{28}$$

Upon differentiation,

$$\frac{\partial^2 \Pi}{\partial r^2} + k^2 \Pi = \frac{E_o}{ikr} \sum_{n=0}^{\infty} (-i)^n (2n+1)\, j_n(kr) \left[P_n^1(\cos\alpha)\, P_n(\cos\theta) + 2 \sum_{m=1}^{n} \frac{(n-m)!}{(n+m)!} \frac{\partial P_n^m(\cos\alpha)}{\partial\alpha} P_n^m(\cos\theta) \cos m\phi \right] \tag{29}$$

$$\frac{\partial^2 \Pi^*}{\partial r^2} + k^2 \Pi^* = \frac{-H_o}{ikr \sin\alpha} \sum_{n=1}^{\infty} 2(-i)^n (2n+1)\, j_n(kr) \left\{ \sum_{m=1}^{n} \frac{m\,(n-m)!}{(n+m)!} P_n^m(\cos\alpha)\, P_n^m(\cos\theta) \sin m\phi \right\}. \tag{30}$$

But since Π and Π^* are related to solutions of the scalar wave equation u_{nm} and v_{nm} by

$$\Pi = r \sum_n \sum_m u_{nm}$$
$$\Pi^* = r \sum_n \sum_m v_{nm} \tag{31}$$

performing the indicated operations on Π and Π^* yields:

$$\frac{\partial^2 \Pi}{\partial r^2} + k^2 \Pi = \frac{1}{r} \sum_n \sum_m u_{nm}(n)(n+1)$$
$$\frac{\partial^2 \Pi^*}{\partial r^2} + k^2 \Pi^* = \frac{1}{r} \sum_n \sum_m v_{nm}(n)(n+1)\,. \tag{32}$$

Therefore, Π and Π^* are given by:

$$\Pi = \frac{r E_o}{ik} \sum_{n=0}^{\infty} (2 - \delta_m^o) \cos m\phi \sum_{n=m}^{\infty} \frac{(n-m)!}{(n+m)!} \frac{(2n+1)}{n(n+1)} (-i)^n j_n(kr)\, P_n^m(\cos\theta) \frac{\partial P_n^m(\cos\alpha)}{\partial\alpha} \tag{33}$$

$$\Pi^* = \frac{-r H_o}{ik \sin \alpha} \sum_{m=1}^{\infty} 2m \sin m\phi \sum_{n=m}^{\infty} (-i)^n \frac{(n-m)!}{(n+m)!} \frac{(2n+1)}{n(n+1)} j_n(kr) P_n^m(\cos\theta) P_n^m(\cos\alpha) \tag{34}$$

where $H_o = \sqrt{\frac{\epsilon}{\mu}} E_o$.

The incident wave having been separated into two excitations, one consisting of transverse electric spherical waves, the other of transverse magnetic spherical waves, the scattering of such a wave by a perfectly conducting hemisphere or hemispherical shell will now be treated by considering the total field as composed of two parts, one of transverse magnetic type, excited by the transverse magnetic component of the plane wave, and the other of transverse electric type, excited by the transverse electric component of the plane wave. The scatterer is pictured in Fig. 1, with its symmetry axis along the polar axis.

THE HEMISPHERICAL SHELL

Space exterior to the conductor will be divided into two regions:

in region 1, $r \leq a$

in region 2, $r \geq a$,

and the Π and Π^* vectors, as well as their associated field components, will bear subscripts to indicate the region in which they are valid

Boundary conditions require that:

I. Tangential components of electric field must vanish on conducting surfaces,

II. Tangential components of electric and magnetic fields must match across common boundary of regions 1 and 2,

III. Total field must reduce to that of exciting field as distance from origin approaches infinity.

For the transverse magnetic field, these require:

I $E_\theta = E_\phi = 0$, $r = a$, $\pi/2 \leq \theta \leq \pi$

$$\left.\begin{aligned} \frac{1}{r}\frac{\partial^2 \Pi_1}{\partial r\,\partial\theta} &= 0 = \frac{1}{r}\frac{\partial^2 \Pi_2}{\partial r\,\partial\theta} \\ \frac{1}{r\sin\theta}\frac{\partial^2 \Pi_1}{\partial r\,\partial\phi} &= 0 = \frac{1}{r\sin\theta}\frac{\partial^2 \Pi_2}{\partial r\,\partial\phi} \end{aligned}\right\} \quad \begin{aligned} r &= a \\ \pi/2 \leq \theta &\leq \pi \end{aligned} \tag{35}$$

$$\text{II.}\quad \left.\begin{array}{l} E_{\theta_1} = E_{\theta_2}\,,\ E_{\phi_1} = E_{\phi_2}\,,\ H_{\theta_1} = H_{\theta_2}\,,\ H_{\phi_1} = H_{\phi_2} \\ \dfrac{\partial^2 \Pi_1}{\partial r\ \partial\theta} = \dfrac{\partial^2 \Pi_2}{\partial r\ \partial\theta}\,,\ \dfrac{\partial^2 \Pi_1}{\partial r\ \partial\phi} = \dfrac{\partial^2 \Pi_2}{\partial r\ \partial\phi}\,,\ \dfrac{\partial \Pi_1}{\partial\phi} = \dfrac{\partial \Pi_2}{\partial\phi}\,,\ \dfrac{\partial \Pi_1}{\partial\theta} = \dfrac{\partial \Pi_2}{\partial\theta} \end{array}\right\} \quad \begin{array}{c} r = a \\ 0 \le \theta \le \pi/2 \end{array} \tag{36}$$

$$\text{III.}\quad \lim_{r\to\infty} \Pi_2 = \frac{r E_o}{ik} \sum_{m=0}^{\infty} (2 - \delta_m^o) \cos m\phi \sum_{n=m}^{\infty} \frac{(n-m)!}{(n+m)!} \frac{(2n+1)}{n(n+1)} (-i)^n j_n(kr) P_n^m(\cos\theta) \frac{\partial P_n^m(\cos\alpha)}{\partial\alpha}. \tag{37}$$

Π_1 and Π_2 must be of the form:

$$\Pi_1 = r \sum_{m=0}^{\infty} \sum_{n=m}^{\infty} a_{mn} \cos m\phi\ j_n(kr) P_n^m(\cos\theta) \tag{38}$$

$$\Pi_2 = r \sum_{m=0}^{\infty} \sum_{n=m}^{\infty} c_{mn} \cos m\phi\ j_n(kr) P_n^m(\cos\theta) + r \sum_{m=0}^{\infty} \sum_{n=m}^{\infty} d_{mn} \cos m\phi\ h_n(kr) P_n^m(\cos\theta)\,, \tag{39}$$

where Π_1 contains no Hankel functions, since these become infinite at the origin, and the ϕ variation is restricted to $\cos m\phi$ since the incident excitation is of this type.

If c_{mn} are so chosen that the first summation in the formula for Π_2 is equal to the Π component of the plane wave, then condition III is satisfied, since the remaining part involving Hankel functions represents an outgoing wave which becomes vanishingly small as distance from the origin approaches infinity. Then,

$$c_{mn} = \frac{E_o}{ik} (2 - \delta_m^o) \frac{(n-m)!}{(n+m)!} \frac{(2n+1)}{n(n+1)} (-i)^n \frac{\partial P_n^m(\cos\alpha)}{\partial\alpha}. \tag{40}$$

Condition I will be satisfied if, for each value of m in the double series on n and m for $\partial\Pi_1/\partial r$ and $\partial\Pi_2/\partial r$, the associated series on n be set equal to zero over the range $\pi/2 \le \theta \le \pi$, and $r = a$. Thus, for every m,

$$\left.\begin{array}{l} \displaystyle\sum_{n=m}^{\infty} a_{mn} \hat{j}_n'(ka) P_n^m(\cos\theta) = 0 \qquad (41) \\ \displaystyle\sum_{n=m}^{\infty} [c_{mn} \hat{j}_n'(ka) + d_{mn} \hat{H}_n'(ka)] P_n^m(\cos\theta) = 0 \qquad (42) \end{array}\right\} \quad \begin{array}{c} r = a \\ \pi/2 \le \theta \le \pi \end{array}$$

Condition II will be satisfied if, for each value of m in the pair of series for Π_1 and Π_2, as well as for the pair $\partial\Pi_1/\partial r$ and $\partial\Pi_2/\partial r$, the associated pair of series

on n be set equal over the range $0 \leq \theta \leq \pi/2$, and $r = a$. Thus, for every m,

$$\left.\begin{aligned} \sum_{n=m}^{\infty} a_{mn} \hat{J}_n'(ka) P_n^m(\cos\theta) &= \sum_{n=m}^{\infty} [c_{mn} \hat{J}_n'(ka) + d_{mn} \hat{H}_n'(ka)] P_n^m(\cos\theta) \quad (43) \\ \sum_{n=m}^{\infty} a_{mn} j_n(ka) P_n^m(\cos\theta) &= \sum_{n=m}^{\infty} [c_{mn} j_n(ka) + d_{mn} h_n(ka)] P_n^m(\cos\theta) \quad (44) \end{aligned}\right\} 0 \leq \theta \leq \pi/2 .$$

Boundary conditions will thus be satisfied for the transverse magnetic component of the total field if for every m,

$$a_{mn} \hat{J}_n'(ka) = c_{mn} \hat{J}_n'(ka) + d_{mn} \hat{H}_n'(ka) \tag{45}$$

$$\sum_{n=m}^{\infty} [c_{mn} \hat{J}_n'(ka) + d_{mn} \hat{H}_n'(ka)] P_n^m(\cos\theta) = 0, \ \pi/2 \leq \theta \leq \pi \tag{46}$$

$$\sum_{n=m}^{\infty} a_{mn} j_n(ka) P_n^m(\cos\theta) = \sum_{n=m}^{\infty} [c_{mn} j_n(ka) + d_{mn} h_n(ka)] P_n^m(\cos\theta), \ 0 \leq \theta \leq \pi/2. \tag{47}$$

For the transverse electric field, boundary conditions require:

$$\text{I.} \quad \left.\begin{aligned} E_\theta = 0 = \frac{\partial \Pi_1^*}{\partial \phi} = \frac{\partial \Pi_2^*}{\partial \phi} \\ E_\phi = 0 = \frac{\partial \Pi_1^*}{\partial \theta} = \frac{\partial \Pi_2^*}{\partial \theta} \end{aligned}\right\} \quad \begin{aligned} r &= a \\ \pi/2 \leq \theta &\leq \pi \end{aligned} \tag{48}$$

$$\text{II.} \quad \left.\begin{aligned} E_{\theta_1} = E_{\theta_2} &; \frac{\partial \Pi_1^*}{\partial \phi} = \frac{\partial \Pi_2^*}{\partial \phi} \\ E_{\phi_1} = E_{\phi_2} &; \frac{\partial \Pi_1^*}{\partial \theta} = \frac{\partial \Pi_2^*}{\partial \theta} \\ H_{\theta_1} = H_{\theta_2} &; \frac{\partial^2 \Pi_1^*}{\partial r \, \partial \theta} = \frac{\partial^2 \Pi_2^*}{\partial r \, \partial \theta} \\ H_{\phi_1} = H_{\phi_2} &; \frac{\partial^2 \Pi_1^*}{\partial r \, \partial \phi} = \frac{\partial^2 \Pi_2^*}{\partial r \, \partial \phi} \end{aligned}\right\} \quad \begin{aligned} r &= a \\ 0 \leq \theta &\leq \pi/2 \end{aligned} \tag{49}$$

III.

$$\lim_{r \to \infty} \Pi_{\parallel}^* = \frac{-r H_o}{ik \sin\alpha} \sum_{m=1}^{\infty} 2m \sin m\phi \sum_{n=m}^{\infty} \frac{(n-m)!}{(n+m)!} \frac{(2n+1)}{n(n+1)} (-i)^n j_n(kr) P_n^m(\cos\theta) P_n^m(\cos\alpha). \tag{50}$$

But Π_1^* and Π_2^* must be of the form:

$$\Pi_1^* = r \sum_{m=1}^{\infty} a_{mn}^* \sin m\phi \sum_{n=m}^{\infty} j_n (kr) P_n^m (\cos \theta) \tag{51}$$

$$\Pi_2^* = r \sum_{m=1}^{\infty} c_{mn}^* \sin m\phi \sum_{n=m}^{\infty} j_n (kr) P_n^m (\cos \theta) + r \sum_{m=1}^{\infty} d_{mn}^* \sin m\phi \sum_{n=m}^{\infty} h_n (kr) P_n^m (\cos \theta), \tag{52}$$

for the same reasons as given in the transverse magnetic case, and condition III will be satisfied if

$$c_{mn}^* = \frac{-H_o}{ik \sin \alpha} (2m) \frac{(n-m)!}{(n+m)!} \frac{(2n+1)}{n(n+1)} (-i)^n P_n^m (\cos \alpha). \tag{53}$$

Condition I will be satisfied if, for each value of m in the double series on n and m for Π_1^* and Π_2^*, the associated series on n is set equal to zero over the range $\pi/2 \leq \theta \leq \pi$ and $r = a$. Thus, for each choice of m,

$$\left.\begin{aligned} &\sum_{n=m}^{\infty} a_{mn}^* j_n (ka) P_n^m (\cos \theta) = 0 && (54) \\ &\sum_{n=m}^{\infty} [c_{mn}^* j_n (ka) + d_{mn}^* h_n (ka)] P_n^m (\cos \theta) = 0 && (55) \end{aligned}\right\} \pi/2 \leq \theta \leq \pi .$$

Condition II will be satisfied if, for each value of m in the pair of double series on m and n for Π_1^* and Π_2^*, as well as for the pair for $\partial \Pi_1^*/\partial r$ and $\partial \Pi_2^*/\partial r$, the associated pair of series on n is set equal over the range $0 \leq \theta \leq \pi/2$ and $r = a$. Thus, for each choice of m,

$$\left.\begin{aligned} &\sum_{n=m}^{\infty} a_{mn}^* j_n (ka) P_n^m (\cos \theta) = \sum_{n=m}^{\infty} [c_{mn}^* j_n (ka) + d_{mn}^* h_n (ka)] P_n^m (\cos \theta) && (56) \\ &\sum_{n=m}^{\infty} a_{mn}^* \hat{J}_n' (ka) P_n^m (\cos \theta) = \sum_{n=m}^{\infty} [c_{mn}^* \hat{J}_n' (ka) + d_{mn}^* \hat{H}_n' (ka)] P_n^m (\cos \theta) && (57) \end{aligned}\right\} 0 \leq \theta \leq \pi/2 .$$

Boundary conditions will thus be satisfied for the transverse electric component of the total field if, for every m,

$$a_{mn}^* j_n (ka) = c_{mn}^* j_n (ka) + d_{mn}^* h_n (ka) \tag{58}$$

$$\sum_{n=m}^{\infty} [c_{mn}^* j_n (ka) + d_{mn}^* h_n (ka)] P_n^m (\cos \theta) = 0 , \quad \pi/2 \leq \theta \leq \pi \tag{59}$$

$$\sum_{n=m}^{\infty} a_{mn}^* \hat{J}_n' (ka) P_n^m (\cos \theta) = \sum_{n=m}^{\infty} [c_{mn}^* \hat{J}_n' (ka) + d_{mn}^* \hat{H}_n' (ka)] P_n^m (\cos \theta), \quad 0 \leq \theta \leq \pi/2 . \tag{60}$$

The equations satisfied by the unstarred coefficients associated with the transverse magnetic field are seen to be the same as those for the starred coefficients associated with the transverse electric field, with the ordinary spherical Bessel and Hankel functions interchanged with the corresponding derivatives of the spherical Bessel and Hankel functions. The set of equations for the unstarred coefficients will be solved for the coefficients d_{mn} in terms of the c_{mn}, and the solution modified by the above rule to obtain the starred coefficients d^*_{mn} in terms of the c^*_{mn}.

Multiplying eq. (46) by $P^m_l(\cos\theta)$ and integrating with respect to $\cos\theta$ over $\pi/2 \le \theta \le \pi$, a relation between the coefficients is obtained:

$$\frac{1}{2l+1}\frac{(l+m)!}{(l-m)!}\left(c_{ml}\,\hat{J}'_l(ka) + d_{ml}\,\hat{H}'_l(ka)\right) = \sum_{p=((m))}^{\infty} \gamma^m_{lp}\left[c_{mp}\,\hat{J}'_p(ka) + d_{mp}\,\hat{H}'_p(ka)\right] \tag{61}$$

where

$$\gamma^m_{lp} = \int_{\theta=\pi/2}^{\theta=\pi} P^m_l(\cos\theta)\,P^m_p(\cos\theta)\,d(\cos\theta)$$

$$= \frac{(-1)^{(l-p-1)/2}}{(l-p)(l+p+1)}\,\frac{[1\cdot3\cdot5\cdots((l+m))]}{[2\cdot4\cdot6\cdots((l-m))]}\,\frac{[1\cdot3\cdot5\cdots((p+m))]}{[2\cdot4\cdot6\cdots((p-m))]}, \tag{62}$$

and l is restricted to be even, and p odd. The double parenthesis $((\,))$ enclosing a quantity denotes the largest integer (of the proper parity) less than, or equal to, the number enclosed.

Substituting from eq. (45) into eq. (47) to eliminate a_{mn}; then multiplying by $P^m_l(\cos\theta)$ and integrating with respect to $\cos\theta$ over $0 \le \theta \le \pi/2$, another relation between coefficients is obtained:

$$\frac{1}{2l+1}\frac{(l+m)!}{(l-m)!}\left\{d_{ml}\,\frac{\hat{H}'_l(ka)\,j_l(ka)}{\hat{J}'_l(ka)} - d_{ml}\,h_l(ka)\right\}$$

$$= \sum_{p=((m))}^{\infty} \gamma^m_{lp}\left\{d_{mp}\,h_p(ka) - d_{mp}\,\frac{\hat{H}'_p(ka)\,j_p(ka)}{\hat{J}'_p(ka)}\right\}$$

$$\text{or}\quad \frac{1}{2l+1}\frac{(l+m)!}{(l-m)!}\,\frac{d_{ml}}{\hat{J}'_l(ka)} = \sum_{p=((m))}^{\infty} \gamma^m_{lp}\,\frac{d_{mp}}{\hat{J}'_p(ka)} \tag{63}$$

Eliminating between eqs. (61) and (63), a system of equations relating the d_{mp} to the

c_{mn} for each value of m is obtained:

$$\frac{(l+m)!}{(l-m)!}\frac{c_{ml}\,\hat{J}_l'(ka)}{2l+1} - \sum_{p=((m))}^{\infty} \gamma_{lp}^{m}\, c_{mp}\,\hat{J}_p'(ka) =$$

$$\sum_{p=((m))}^{\infty} \gamma_{lp}^{m}\, d_{mp}\,\hat{H}_p'(ka) + \hat{J}_l'(ka)\,\hat{H}_l'(ka) \sum_{p=((m))}^{\infty} \gamma_{lp}^{m}\,\frac{d_{mp}}{\hat{J}_p'(ka)} \tag{64}$$

For the coefficients d_{mp}, merely interchange l and p. The corresponding system of equations involving the d_{mp}^{*} and c_{mn}^{*} is then:

$$\frac{(l+m)!}{(l-m)!}\frac{c_{ml}^{*}\, j_l(ka)}{2l+1} - \sum_{p=((m))}^{\infty} \gamma_{lp}^{m}\, c_{mp}^{*}\, j_p(ka) =$$

$$\sum_{p=((m))}^{\infty} \gamma_{lp}^{m}\, d_{mp}^{*}\, h_p(ka) + j_l(ka)\, h_l(ka) \sum_{p=((m))}^{\infty} \gamma_{lp}^{m}\,\frac{d_{mp}^{*}}{j_p(ka)} \tag{65}$$

For each choice of m, this yields one infinite set of linear equations for the d_{ml}, one for the d_{mp}, and a similar pair for the starred coefficients d_{ml}^{*} and d_{mp}^{*}.

THE SOLID HEMISPHERE

For the scattering of a plane wave by a solid hemisphere, the same procedure is followed as for the shell. Space exterior to the conductor is divided into two regions.

in region 1, $r \le a$, $0 \le \theta \le \pi/2$

in region 2, $r \le a$

Boundary conditions I, II, and III require that for the transverse magnetic field:

$$\text{I.}\quad \left.\begin{aligned} &E_{\theta_2} = E_{\phi_2} = 0 \\ &\frac{1}{r}\frac{\partial^2 \Pi_2}{\partial r\,\partial\theta} = \frac{1}{r\sin\theta}\frac{\partial^2 \Pi_2}{\partial r\,\partial\phi} = 0 \end{aligned}\right\} \quad \begin{aligned} &r = a \\ &\pi/2 \le \theta \le \pi \end{aligned} \tag{66}$$

$$\left.\begin{aligned} &E_{r_1} = E_{\phi_1} = 0 \\ &\Pi_1 = \frac{1}{r\sin\theta}\frac{\partial^2 \Pi_1}{\partial r\,\partial\phi} = 0 \end{aligned}\right\} \quad \begin{aligned} &r \le a \\ &\theta = \pi/2 \end{aligned} \tag{67}$$

$$\text{III.}\quad \left.\begin{aligned} &E_{\theta_1} = E_{\theta_2},\ E_{\phi_1} = E_{\phi_2},\ H_{\theta_1} = H_{\theta_2},\ H_{\phi_1} = H_{\phi_2} \\ &\frac{\partial^2 \Pi_1}{\partial r\,\partial\theta} = \frac{\partial^2 \Pi_2}{\partial r\,\partial\theta},\ \frac{\partial^2 \Pi_1}{\partial r\,\partial\phi} = \frac{\partial^2 \Pi_2}{\partial r\,\partial\phi},\ \frac{\partial \Pi_1}{\partial\phi} = \frac{\partial \Pi_2}{\partial\phi},\ \frac{\partial \Pi_1}{\partial\theta} = \frac{\partial \Pi_2}{\partial\theta} \end{aligned}\right\} \quad \begin{aligned} &r = a \\ &0 \le \theta \le \pi/2 \end{aligned} \tag{68}$$

III.

$$\lim_{r \to \infty} \Pi_2 = \frac{r E_o}{ik} \sum_{m=o}^{\infty} (2 - \delta_m^o) \cos m\phi \sum_{n=m}^{\infty} \frac{(n-m)!}{(n+m)!} \frac{(2n+1)}{n(n+1)} (-i)^n j_n(kr) P_n^m(\cos\theta) \frac{\partial P_n^m(\cos\alpha)}{\partial \alpha} . \tag{69}$$

Π_1 and Π_2 are chosen to be of the form

$$\Pi_1 = r \sum_{m=o}^{\infty} \sum_{n=m}^{\infty} \alpha_{mn} \cos m\phi \; j_n(kr) P_n^m(\cos\theta) \tag{70}$$

$$\Pi_2 = r \sum_{m=o}^{\infty} \sum_{n=m}^{\infty} c_{mn} \cos m\phi \; j_n(kr) P_n^m(\cos\theta) + r \sum_{m=o}^{\infty} \sum_{n=m}^{\infty} \beta_{mn} \cos m\phi \; h_n(kr) P_n^m(\cos\theta) . \tag{71}$$

Condition III will be satisfied if c_{mn} are so chosen that

$$c_{mn} = \frac{E_o}{ik} (2 - \delta_m^o) \frac{(n-m)!}{(n+m)!} \frac{2n+1}{n(n+1)} (-i)^n \frac{\partial P_n^m(\cos\alpha)}{\partial \alpha} \tag{72}$$

The portion of condition I that requires $E_{r_1} = E_{\phi_1} = 0$ or $\Pi_1 = \frac{\partial^2 \Pi_1}{\partial r \, \partial \phi} = 0$ when $\theta = \pi/2$ will be satisfied if the coefficients α_{mn} in the series for Π_1 are set equal to zero except when m and n are of opposite parity, since the Legendre polynomials $P_m^n(\cos\theta)$ vanish at $\theta = \pi/2$, if m and n are of opposite parity. The remaining conditions then require, for each m

$$\sum_{n=m}^{\infty} [c_{mn} \hat{J}_n'(ka) + \beta_{mn} \hat{H}_n'(ka)] P_n^m(\cos\theta) = 0, \quad \pi/2 \le \theta \le \pi \tag{73}$$

$$\sum_{s=m+1}^{\infty} \alpha_{ms} j_s(ka) P_s^m(\cos\theta) = \sum_{n=m}^{\infty} [c_{mn} j_n(ka) + \beta_{mn} h_n(ka)] P_n^m(\cos\theta), \quad 0 \le \theta \le \pi/2 \tag{74}$$

$$\sum_{s=m+1}^{\infty} \alpha_{ms} \hat{J}_s'(ka) P_s^m(\cos\theta) = \sum_{n=m}^{\infty} [c_{mn} \hat{J}_n'(ka) + \beta_{mn} \hat{H}_n'(ka)] P_n^m(\cos\theta), \quad 0 \le \theta \le \pi/2 \tag{75}$$

where s and m are of opposite parity.

For the transverse electric field, boundary conditions require that:

$$\text{I.} \quad \left.\begin{aligned} E_{\phi_2} = E_{\theta_2} = 0 \\ \frac{\partial \Pi_2^*}{\partial \theta} = \frac{\partial \Pi_2^*}{\partial \phi} = 0 \end{aligned}\right\} \begin{aligned} r = a \\ \pi/2 \le \theta \le \pi \end{aligned} \tag{76}$$

$$\left.\begin{aligned} E_{\phi_1} = 0 \\ \frac{\partial \Pi_1^*}{\partial \theta} = 0 \end{aligned}\right\} \theta = \pi/2 \tag{77}$$

$$\text{II.}\quad \left.\begin{array}{l} E_{\theta_1} = E_{\theta_2},\ E_{\phi_1} = E_{\phi_2},\ H_{\theta_1} = H_{\theta_2},\ H_{\phi_1} = H_{\phi_2} \\ \dfrac{\partial \Pi_1^*}{\partial \phi} = \dfrac{\partial \Pi_2^*}{\partial \phi},\ \dfrac{\partial \Pi_1^*}{\partial \theta} = \dfrac{\partial \Pi_2^*}{\partial \theta},\ \dfrac{\partial^2 \Pi_1^*}{\partial r\, \partial \theta} = \dfrac{\partial^2 \Pi_2^*}{\partial r\, \partial \theta},\ \dfrac{\partial^2 \Pi_1^*}{\partial r\, \partial \phi} = \dfrac{\partial^2 \Pi_2^*}{\partial r\, \partial \phi} \end{array}\right\} \begin{array}{l} r = a \\ 0 \le \theta \le \pi/2 \end{array} \tag{78}$$

III.

$$\lim_{r \to \infty} \Pi_2^* = \frac{-r H_o}{ik \sin \alpha} \sum_{m=1}^{\infty} 2m \sin m\phi \sum_{n=m}^{\infty} (-i)^n \frac{2n+1}{n(n+1)} \frac{(n-m)!}{(n+m)!} j_n(kr) P_n^m(\cos\theta) P_n^m(\cos\alpha) . \tag{79}$$

Π_1^* and Π_2^* are chosen to be of the form

$$\Pi_1^* \equiv r \sum_{m=1}^{\infty} \sum_{n=m}^{\infty} \alpha_{mn}^* \sin m\phi\ j_n(kr) P_n^m(\cos\theta) \tag{80}$$

$$\Pi_2^* = r \sum_{m=1}^{\infty} \sum_{n=m}^{\infty} c_{mn}^* \sin m\phi\ j_n(kr) P_n^m(\cos\theta) + r \sum_{m=1}^{\infty} \sum_{n=m}^{\infty} \beta_{mn}^* \sin m\phi\ h_n(kr) P_n^m(\cos\theta) . \tag{81}$$

Condition III will be satisfied if c_{mn}^* are chosen in the same way as for the shell:

$$c_{mn}^* = \frac{-H_o}{ik \sin \alpha} (2m) (-i)^n \frac{2n+1}{n(n+1)} \frac{(n-m)!}{(n+m)!} P_n^m(\cos\alpha) . \tag{82}$$

The portion of condition I that requires $E_{\phi_1} = 0$ or $\dfrac{\partial \Pi_1}{\partial \theta} = 0$ when $\theta = \pi/2$ will be satisfied if the coefficients in the series α_{mn}^* are set equal to zero except when m and n are of the same parity, since the derivatives of the Legendre polynomials $\dfrac{\partial P_n^m(\cos\theta)}{\partial \theta}$ vanish at $\theta = \pi/2$, if n and m are of the same parity. The remaining conditions require that for each m,

$$\sum_{n=m}^{\infty} [c_{mn}^* j_n(ka) + \beta_{mn}^* h_n(ka)] P_n^m(\cos\theta) = 0 , \quad \pi/2 \le \theta \le \pi \tag{83}$$

$$\sum_{t=m}^{\infty} [\alpha_{mt}^* \hat{J}_t'(ka) P_t^m(\cos\theta)] = \sum_{n=m}^{\infty} [c_{mn}^* \hat{J}_n'(ka) + \beta_{mn}^* \hat{H}_n'(ka)] P_n^m(\cos\theta), \quad 0 \le \theta \le \pi/2 \tag{84}$$

$$\sum_{t=m}^{\infty} [\alpha_{mt}^* j_t(ka) P_t^m(\cos\theta)] = \sum_{n=m}^{\infty} [c_{mn}^* j_n(ka) + \beta_{mn}^* h_n(ka)] P_n^m(\cos\theta), \quad 0 \le \theta \le \pi/2 , \tag{85}$$

where t and m are of the same parity. These are the same equations satisfied by the unstarred coefficients, with s and t interchanged, and the ordinary spherical Bessel and Hankel functions interchanged with the corresponding derivatives of the spherical Bessel and Hankel functions. The eqs. 73 to 75 for the unstarred coefficients will be solved to obtain the coefficients β_{mn} in terms of c_{mn}, and the solution modified by this rule to obtain the starred coefficients β_{mn}^* in terms of the c_{mn}^*. Following the procedure outlined for the shell, two systems of equations are derived for the constants

β_{mn}, one system involving the coefficients β_{ms}, where s and m are of different parity, and the other system involving the constants β_{mt}, where t and m are of the same parity:

$$-\frac{(t+m)!}{(t-m)!}\frac{c_{mt}}{2t+1}\frac{i}{ka\,h_t(ka)} - \sum_{s=m+1}^{\infty}\gamma_{st}^{m}\,c_{ms}\,\hat{J}_s'(ka) + \frac{\hat{H}_t'(ka)}{h_t(ka)}\sum_{s=m+1}^{\infty}\gamma_{st}^{m}\,c_{ms}\,j_s(ka)$$

$$= \sum_{s=m+1}^{\infty}\gamma_{st}^{m}\,\beta_{ms}\,\hat{H}_s'(ka) + \frac{\hat{H}_t'(ka)}{h_t(ka)}\sum_{s=m+1}^{\infty}\gamma_{st}^{m}\,\beta_{ms}\,\hat{H}_s'(ka)\left\{\frac{h_s(ka)}{\hat{H}_s'(ka)} - \frac{2j_s(ka)}{\hat{J}_s'(ka)}\right\}, \tag{86}$$

and

$$-\frac{(s+m)!}{(s-m)!}\frac{c_{ms}}{2s+1}\frac{i}{ka\,\hat{H}_s'(ka)} - \sum_{t=m}^{\infty}\gamma_{st}^{m}\,c_{mt}\,j_t(ka) - \left\{\frac{h_s(ka)}{\hat{H}_s'(ka)} - \frac{2j_s(ka)}{\hat{J}_s'(ka)}\right\}\sum_{t=m}^{\infty}\gamma_{st}^{m}\,c_{mt}\,\hat{J}_t'(ka)$$

$$= \left\{\frac{h_s(ka)}{\hat{H}_s'(ka)} - \frac{2j_s(ka)}{\hat{J}_s'(ka)}\right\}\sum_{t=m}^{\infty}\gamma_{st}^{m}\,\beta_{mt}\,\hat{H}_t'(ka) + \sum_{t=m}^{\infty}\gamma_{st}^{m}\,\beta_{mt}\,h_t(ka). \tag{87}$$

For the starred coefficients β_{mn}^{*}, these become

$$-\frac{(s+m)!}{(s-m)!}\frac{c_{ms}^{*}}{2s+1}\frac{i}{ka\,\hat{H}_s'(ka)} - \sum_{t=m}^{\infty}\gamma_{st}^{m}\,c_{mt}^{*}\,j_t(ka) + \frac{h_s(ka)}{\hat{H}_s'(ka)}\sum_{t=m}^{\infty}\gamma_{st}^{m}\,c_{mt}^{*}\,\hat{J}_t'(ka)$$

$$= \sum_{t=m}^{\infty}\gamma_{st}^{m}\,\beta_{mt}^{*}\,h_t(ka) + \frac{h_s(ka)}{\hat{H}_s'(ka)}\sum_{t=m}^{\infty}\gamma_{st}^{m}\,\beta_{mt}^{*}\,h_t(ka)\left\{\frac{\hat{H}_t'(ka)}{h_t(ka)} - \frac{2\hat{J}_t'(ka)}{j_t(ka)}\right\} \tag{88}$$

and

$$-\frac{(t+m)!}{(t-m)!}\frac{c_{mt}^{*}}{2t+1}\frac{i}{ka\,h_t(ka)} - \sum_{s=m+1}^{\infty}\gamma_{st}^{m}\,c_{ms}^{*}\,\hat{J}_s'(ka) - \left\{\frac{\hat{H}_t'(ka)}{h_t(ka)} - \frac{2\hat{J}_t'(ka)}{j_t(ka)}\right\}\sum_{s=m+1}^{\infty}\gamma_{st}^{m}\,c_{ms}^{*}\,j_s(ka)$$

$$= \left\{\frac{\hat{H}_t'(ka)}{h_t(ka)} - \frac{2\hat{J}_t'(ka)}{j_t(ka)}\right\}\sum_{s=m+1}^{\infty}\gamma_{st}^{m}\,\beta_{ms}^{*}\,h_s(ka) + \sum_{s=m+1}^{\infty}\gamma_{st}^{m}\,\beta_{ms}^{*}\,\hat{H}_s'(ka). \tag{89}$$

CALCULATION OF COEFFICIENTS

The equations involving the scattered field coefficients for the shell and the solid hemisphere are similar. In each case, four sets of linear equations in infinitely many variables are defined for every value of m. These equations (64 to 65 and 86 to 89) may be written in matrix form as:

$$\begin{aligned} \|C_l^m\| &= \|A_{lp}^m\|\;\|d_p^m\|, & \|C_l^{*m}\| &= \|A_{lp}^{*m}\|\;\|d_p^{*m}\|, \\ \|C_p^m\| &= \|B_{pl}^m\|\;\|d_l^m\|, & \|C_l^{*m}\| &= \|B_{pl}^{*m}\|\;\|d_l^{*m}\|. \end{aligned} \tag{90}$$

$\|A_{lp}^m\|$, $\|B_{pl}^m\|$, $\|A_{lp}^{*m}\|$ and $\|B_{pl}^{*m}\|$ are infinite square matrices composed of known

elements which depend only upon the radius of the hemisphere. $\|C_l^m\|$, $\|C_p^m\|$, $\|C_l^{*m}\|$, $\|C_p^{*m}\|$ are infinite column matrices with known elements depending upon the direction of the incident wave and the radius of the scatterer. $\|d_l^m\|$, $\|d_p^m\|$, $\|d_l^{*m}\|$ and $\|d_p^{*m}\|$ are infinite column matrices, the components of which determine the unknown field coefficients. These unknown coefficients may be readily expressed for arbitrary angle of incidence by:

$$\begin{aligned} \|d_p^m\| &= \|A_{lp}^m\|^{-1} \|C_l^m\| , \quad \|d_p^{*m}\| = \|A_{lp}^{*m}\|^{-1} \|C_l^{*m}\| \\ \|d_l^m\| &= \|B_{pl}^m\|^{-1} \|C_p^m\| , \quad \|d_l^{*m}\| = \|B_{pl}^{*m}\|^{-1} \|C_p^{*m}\| \end{aligned} \tag{91}$$

Solving finite subsets of increasing order, the approximate solutions for the column matrices $\|d_p^m\|$, $\|d_l^m\|$, $\|d_p^{*m}\|$ and $\|d_l^{*m}\|$ converge to the exact solutions. The number of terms that must be included to give sufficient accuracy depends upon the radius of the hemisphere, as well as the angle at which the plane wave is incident.

Most of the computation is involved in the evaluation of the matrices $\|A_{lp}^m\|$, $\|B_{pl}^m\|$, $\|A_{lp}^{*m}\|$ and $\|B_{pl}^{*m}\|$ and the calculation of the approximate inverses. Once these have been obtained, the scattered field coefficients for various angles of incidence are given by eq. (91).

GLOSSARY OF SYMBOLS

$j_n(kr)$ - Spherical Bessel function of order n and argument kr.

$h_n(kr)$ - Spherical Hankel function of order n and argument kr (first kind).

$\hat{J}_n'(kr) = \dfrac{d}{d(kr)} [kr\, j_n(kr)]$.

$\hat{H}_n'(kr) = \dfrac{d}{d(kr)} [kr\, h_n(kr)]$.

$P_n^m(\cos\theta)$ - Associated Legendre polynomial of order n and degree m .

PROJECT REPORT 302-35

CONTRACT W 36-039 sc33634

MAY 15, 1950

NOTE: In submitting this report it is understood that all provisions of the contract between The Foundation and the Cooperator and pertaining to publicity of subject matter will be rigidly observed.

Investigator Edward M. Kennamer Date July 20, 1950

Investigator..... Date.....

Investigator..... Date.....

Investigator..... Date.....

Investigator..... Date.....

Supervisor W. Lumsey Date July 20 1950

FOR THE OHIO STATE UNIVERSITY RESEARCH FOUNDATION

Executive Director James S. Owens Date 7-31-50
F.E.S.