Reproduced by

CENTRAL AIR DOCUMENTS OFFICE

WRIGHT-PATTERSON AIR FORCE BASE - DAYTON, OHIO

3170A

67141

The U.S. GOVERNMENT

IS ABSOLVED

ANY LITIGATION WHICH MAY ENSUE FROM ANY

GEMENT ON DOMESTIC OR FOREIGN PATENT RIGHTS

MAY BE INVOLVED.

NCLASSIFIED

R-79-94

6 8

ATI No. 67141

FIRST PROGRESS REPORT
ON A
MULTI-CHANNEL MAGNETIC DRUM INNER MEMORY
FOR USE IN
ELECTRONIC DIGITAL COMPUTING INSTRUMENTS

by

J. H. Bigelow

P. Panagos

M. Rubinoff

W. H. Ware

Institute for Advanced Study
Electronic Computer Project
Princeton, New Jersey
1 July 1948

First Progress Report

on a

Multi-Channel Magnetic Drum Inner Memory

for use in

Electronic Digital Computing Instruments

by

J. H. Bigelow
P. Panagos
M. Rubinoff
W. H. Ware

Institute for Advanced Study
Electronic Computer Project
Princeton, New Jersey
1 July 1948

PREFACE

The ensuing report has been prepared in accordance with the terms of Contract N6-ord-139, Task Order II, between Office of Naval Research, U. S. Navy, and the Institute for Advanced Study. The express purpose of this report is to furnish contemporary advice to the Service regarding steps taken and contemplated toward the realization of an electronic computing instrument embodying the principles outlined in the following Institute for Advanced Study reports:

(1) "Preliminary Discussion of the Logical Design of an Electronic Computing Instrument", by Burks, Goldstine, and von Neumann. 28 June 1946.

(2) "Interim Progress Report on the Physical Realization of an Electronic Computing Instrument", by Bigelow, Pomerene, Slutz, and Ware. 1 January 1947.

(3) "Planning and Coding of Problems for an Electronic Computing Instrument", by Goldstine and von Neumann. 1 April 1947.

(4) "Second Interim Progress Report on the Physical Realization of an Electronic Computing Instrument", by Bigelow, Hildebrandt, Pomerene, Snyder, Slutz, and Ware. 1 July 1947.

(5) "Third Interim Progress Report on the Physical Realization of an Electronic Computing Instrument", by Bigelow, Hildebrandt, Pomerene, Rosenberg, Slutz, and Ware. 1 January 1948.

(6) "Planning and Coding of Problems for an Electronic Computing Instrument, Part II", by Goldstine and von Neumann. 15 April 1948.

(7) "Fourth Interim Progress Report on the Physical Realization of an Electronic Computing Instrument", by Bigelow, Hildebrandt, Panagos, Pomerene, Rosenberg, Slutz, and Ware. 1 July 1948.

The experimental techniques, component types, schemes for synthesis of primary organs as well as the underlying philosophy of realization indicated in this report should be understood as wholly tentative, and are subject to revision from time to time either in detail or in their entirety as the work progresses.

J. H. Bigelow

Peter Panagos

Morris Rubinoff

Willis H. Ware

1 July 1948

TABLE OF CONTENTS

		Page
	Preface	ii
I.	Introduction	I-1
II.	Shaping the Problem	II-1
III.	Electrical Qualifications of Read-Record Elements	III-1
IV.	The Single Filament Head	IV-1
V.	Species of Variables Studied	V-1
VI.	Experimental Investigation of Performance of Single-Wire Head	VI-1
VII.	Experimental Auxiliary Circuitry	VII-1
VIII.	Modus Operandi and Circuit Organization	VIII-1
IX.	Design of the 44 Channel Drum System	IX-1

DRAWINGS

Drawing No.	Following page
C-5-2020	III-3
C-5-2019	III-3
C-5-2018	VI-2
C-5-2021	VI-3
C-2-1029	VII-1
C-3-1068	VIII-2
C-5-2013	IX-1
C-5-2014	IX-5
C-5-2015	IX-7
C-5-2016	IX-7
C-5-2017	IX-8

TABLES

Tables I, II, III, IV, V, VI appear following page VI-4.

Table VII appears following page VI-6.

PHOTOGRAPHS

Photographs 1-A through 1-L appear following page VI-7.

Photograph 2 appears following page IX-1.

I. Introduction.

1) Since 1946 an engineering group at the Institute for Advanced Study (Princeton, New Jersey) has been actively engaged in the development of a high speed electronic computing instrument. The guiding principles in this development and the means evolved to date for their realization are described in some detail in a series of reports listed in the accompanying preface. The present report describes a related apparatus considered in 1946 (see page 27 of No. 2 listed) but which has been under active development only since March of this year; and the decision actually to proceed with this construction may appear to constitute a sharp departure from the trend of our prior efforts. A brief review of the situation may serve to orient this development with reference to our central course.

2) As indicated in an earlier report (No. 2 cited) the formulation of the I.A.S. computer distinguishes four "organs" according to function:

a) Terminal (input-output)

b) Memory (inner and outer)

c) Arithmetic

d) Control.

3) Of these, the Institute development group with the cooperation of the Bureau of Standards had completed a version of (1) by January 1948; also the Institute group had completed a satisfactory prototype of the "outer" part of (b), a quite reliable 8-stage version of (c), and parts of (d) by that date. Roughly speaking the performance achieved by these organs and the action-time of their elementary components agreed quite well with the estimates used in the orginal

formulation of the machine. (See Ref. No. 1 cited.) Considerable construction of duplicative nature and some mechanical and technical refinement remained to be done (much of which has since been accomplished--see ref No. 7 cited) , but at this date it already seemed clear that the major uncertainties as to realizeability of the apparatus had been resolved and that techniques had been evolved permitting straightforward design and full-scale completion of these parts with high expectation of success.

4) There remains to be discussed the "inner" section of the memory organ (b); the organization of the computer probably hinges more heavily upon the performance of this unit than upon any other single item. A memory device from which very high performance is expected--the "Selectron" tube--is under development at the Princeton Laboratories of RCA, and many refinements and much progress toward its perfection have been made. The estimated performance figures of the Selectron played a central role in the planning and organization of the entire computer, and this device or its equivalent seem as vital now to the completion of an adequate computing machine as when the original plans were formulated in 1946.

5) By January 1948 work on the Selectron had certainly brought the tube much closer to completion, and although no doubt remained as to eventual success of the development, it did not seem possible to predict the date when these tubes would be available in sufficient quantity to permit operation of the computer even on a

curtailed basis. Accordingly consideration was given by the Institute group to the possibility of producing some (presumably temporary) substitute for the final inner memory-organ, of such a character as to permit continued development and testing of the arithmetic and control organs approaching completion and eventually operation of the machine--though under some handicap-- at the earliest possible date. It was agreed that such a substitute must:

a) Involve no techniques essentially new or of a "research" character with reference to the experience of our group, such as might introduce grave delays or uncertainties of completion.

b) Offer a high expectation of completion by one or two qualified personnel in a time on the order of six months.

c) Afford a capacity on the order of 500 or more "words" of 40 binary digits each.

d) Be capable of a "read in" or "read out" time on the order of a few milliseconds, in order that the machine be able to compute at a useful (though restricted) speed.

e) Be reasonably simple, reliable and uncritical of maintenance.

6) After consideration of various alternatives, it was agreed that in view of the data, personnel, experience, and facilities at our disposal, a circulating multiple channel magnetic memory of a type suggested in an earlier report (Ref. 2, page 27) would be most likely to fill the need. The present report aims to outline in summary fashion three aspects of this development:

A) The technical variables involved, and considerations pro and con various procedures.

B) The conclusions, actual designs, and apparatus developed to fill the requirements a) through e).

C) Estimates as to the ultimate limitations and possibilities of the techniques involved.

7) In the discussion an attempt will be made to proceed as rapidly as possible from a general survey of possibilities to some particular technique considered most promising for the purposes a) through e). In many cases the technical requirements are sufficiently special to eliminate all but a few possibilities through simple calculations and via arguments likely to be valid. Eventually some decisions had to be made on the basis of simple tests and general background experience.

8) It is to be emphasized that our objective has been to proceed as directly as possible with the design of a magnetic memory suitable for operation with a machine of existing design; one which was intended to operate with an electronic memory of far greater speed. Although some of the conclusions and final remarks have a bearing on the subject, it is not intended here to discuss the broader question of how to design an optimum magnetic memory for use with a computing machine particularly intended for such a unit, nor to discuss the most effective organization of an overall system of this type.

II. Shaping the Problem.

1) It is well known that numerically coded information can be stored on a magnetizeable medium in the form of local "spots", provided that the medium possesses appreciable magnetic retentivity; this technique is the basis of many commercial (Brush "Soundmirror" and other magnetic wire and tape recorders) devices and of various apparatus for scientific applications (see Refs. 2, 4, 5, 7 cited, also reports by Electronic Research Associates, etc.). The most effective method of detecting or "reading out" such stored information apparently is by means of motion relative to an electromagnetic pick-up, and if this relative motion of the spot past the pick-up be cyclic then the time interval of the cycle represents the longest wait which may occur before a bit of information may be "written into" or "read out from" any spot location. This longest waiting time will be herein called the "access" time, it being understood that an averaged value of half this amount enters more directly into many efficiency estimates.

2) To be acceptable, the access time of the subject memory must be on the order of milliseconds; also, the continuous operating life between overhauls must be on the order of months. If the cyclic period be taken at ten milliseconds and if each spot were always "written" and "read" by the same pick-up unit rather than by any of several, then the apparatus would be obliged to cycle about 3×10^8 times

in a month; this is about the number of revolutions the average automobile engine makes in 100,000 miles. It is immediately apparent that whatever means is used to move the magnetic medium cyclically relative to the reading station must be of carefully executed, long-life design, as for example pivoted motion or simple rotation in suitable bearings. In particular, rubbing contact between the magnetic medium and the pickup device seem fairly ruled out by this consideration, since the wear at the point of contact would be prohibitive unless lubrication were possible, and unless also it were possible to combine the functions of a superb bearing with those of the pickup device—this seems unlikely. Therefore loops of magnetic wire running against conventional magnetic heads are ruled out, and with them any type of relative motion except simple rotation of medium relative to pickup, with the provision of clearance between.

3) An access time of ten milliseconds maximum implies (at most) a cyclic speed on the order of 6000 R.P.M. This is certainly within the bounds of normal engineering practice; many electric motors are rated (and normally run) at higher speeds. Since the I.A.S. computing machine is non-synchronous there is no particular reason that this speed should be constant; in fact, an ordinary polyphase induction motor running at 7200 R.P.M. with ten or fifteen percent slip should be perfectly satisfactory. This could then be direct-coupled and, if desired, the entire rotating system could run on the same set of bearings.

4) Up to this point the motion between pick-up device and medium has been called "relative"; which should move and which be stationary can readily be decided by considering the required capacity of the memory, which is 500 or more words of 40 digits each, or 20,000 digits in total. If these could be packed 100 to the linear inch on the magnetic medium-- a figure which seems off hand to be optimistic for a system running out of contact-- then at least 200 linear inches of medium would be required. If such a track were cycled past a single pickup station 100 times per second, the relative velocity would be 20,000 inches per second or roughly 1100 miles per hour -- well over the speed of sound in air. This seems unmanageably high, so that several reading-writing devices appear necessary; and if several are required to scan this length of path in the time allowed it does not appear wise to move the pick-up devices and be obliged to deal with the problem of bringing out numerous leads via slip-rings and collector brushes, etc. Hence it is clear that the relative motion should be effected by moving the medium past (several) stationary reading-writing points.

5) Some indication as to the disposition of the several stationary stations and the 200 (or more) inches of path must now be reached. Consider the path in a single circular loop; it would be about 5 1/2 feet in diameter, but if ten stations were used the peripheral speed could be reduced to about 100 miles per hour, which

would be manageable. However, here another factor enters, namely, the clearance-spacing between the "read-write" device and the magnetic surface. Clearly the packing density of magnetic spots on the medium is critically related to this separation, and in most conceivable circumstances by a greater power of this separation interval than unity. For a single magnetic path on a wheel 5 1/2 ft. in diameter fabricated, for example, from aluminum it is to be expected that temperature variations on the order of ten degrees centigrade would produce variations in the clearance on the order of six thousandths of an inch; and although design ingenuity could certainly compensate part of this, still the implied variations in the geometry are disturbingly large compared to clearances sufficiently close to conditions of contact customarily used in achieving packing densities near 100 to the linear inch.

6) Therefore, to achieve the desired scanning rate of at least 2,000,000 "spots" per second at reasonable peripheral speeds calls for a system of several -- say, ten -- read-write heads; and if these are to be operated at a close but finite and stable separation -- say .001 inch -- from the magnetic medium, then a radius for the rotating system on the order of a few inches -- say, three or four -- is implied. The multiplicity of reading stations discourages rotation of the read-write system and encourages rotation of the magnetic medium in some simple rigid geometric form -- say a drum spinning about its axis; and finally, since the "spots" are assumed subject to examination in wholly arbitrary sequence, this complete ignorance of priority implies uniform

distribution of search frequency among all available locations, so that a number of parallel circular paths on the surface of the magnetizeable cylinder, each path scanned by the same symmetrical station arrangement, appear to be indicated.

7) Essentially this system has been studied, explored experimentally, analyzed theoretically, and reduced to a detailed engineering design considered suitable for production. The construction has, in fact, been advanced well toward completion as the discussion to follow will indicate. A point which should be emphasized is that the apparatus loosely described in the above paragraphs, though it isolates a particular and readily visualizeable procedure from among the enormous class of possibilities, is nevertheless unspecified in many important details and crucial technical points, such as exactly how many search stations, how many circular paths on the magnetizeable cylinder, what material to use on the surface, what sort of search devices or "heads", what sort of mechanical construction and electronic accessories, what modus operandi, etc. Some of these more specific questions were examined as to effect, in the course of evolving a safe design, and it is believed that several noteworthy technical advancements have been made, and some progress toward further theoretical understanding of the techniques. Concerning other variables no data clearly indicating an optimum was available at the time when the current design was fixed,

so that a theory and technique of wholly rational design remains--as usual -- as an aspiration for the future.

III. Electrical Qualifications of Read-Record Elements.

1) Consider next what is required of the read-record stations or "heads" as they are usually called. The recording heads must receive signals at their terminals as electric currents and be able to transmit them in the form of magnetized spots onto the rotating drum affair with which they are associated. Clearly this calls for some configuration of current-carrying conductors, producing a magnetic field in virtue of Ampere's law; and either with or without the aid of ferro-magnetic pole pieces this field must be concentrated on the drum so as to produce a very local magnetic spot suitable for storage between close neighbors. To read out this spot as a signal it is possible to use the same conductor system or "head" as when recording, simply by observing the voltage induced therein as the spot re-passes on its next cyclic journey; or else by using another similar head located elsewhere on the path of the spot around the drum, or even by some entirely different detecting device located anywhere along the path. Arguments of simplicity and interchangeability of function recommend the use of identical reading and recording heads; other considerations presently to be discussed support this view.

2) It has been indicated that 2,000,000 spots per second must be scanned in either reading or recording; if the nominal figure of ten heads and associated channels be used for discussion, then each

head must be able to record or read at the rate of one spot every five microseconds. Suppose that the first and fifth microsecond be assigned as "no action" zones (between recorded signals) and suppose that the current through the head be required to rise at a rate corresponding to ten milliamperes in one microsecond, then to dwell for one microsecond, and to recede in about one microsecond. If the recording head had a winding inductance of 50 millihenries (actual value of a typical commercial sound recording head) a signal of 500 volts peak would have to be applied! This calculation is, of course, extremely crude; the type of multiturn winding ordinarily used on an iron core in commercial recording heads has appreciable inter-turn capacitance as well as inductance, and to estimate the response rate of the useful magnetic flux of such a distributed-parameter system is a pernicious task. Commercial recording heads usually resonate well below the 200 Kc repetition rate used in these approximations; below this they may be expected to behave inductively with exponential current rise; above this value they may be expected to act capacitatively.

3) The attribute of high terminal impedance which characterizes commercial sound-recording heads is but one aspect of their unsuitability for digit recording and reading at high repetition rates as in the present application. These heads usually consist of a pair of windings of from 50 to 500 turns wound about a ferro-magnetic core of high permeability; the core is usually about the circumference of a penny, laminated, and

commonly is assembled from two semicircles into a ring closed everywhere except for an exceedingly narrow gap, on the order of .001 inch. (See sketch C52020) A current through the coil produces magnetic flux, some of which goes directly across the gap while the remainder "fringes" out to the side and constitutes the useful magnetic field effecting the recording process. In sound-recording practice the heads are aligned with this gap transverse to the direction of relative motion of the magnetic medium, (see sketch C52019) with which they are usually maintained in rubbing contact. A brief current pulse applied to this system produces on the surface of the medium a magnetized spot in the form of a small dipole, coplanar with the surface and with axis parallel to the direction of relative motion. In applying such sound-recording heads to the present purpose the technique would be to use the same orientation but to operate at a narrow clearance rather than in rubbing contact with the magnetizeable surface of the drum. Under these conditions of separation, the fringing flux is even less effective and a smaller percentage of the total, and therefore most of the flux produced by the signal current serves no more useful purpose than to raise the inductance of the device to an excessive value.

4) The category of ills just described are all symptomatic of the same disease, namely poor coupling between the conductor system ("winding") and the medium to be magnetically inscribed. For convenient reference these and their essentially synonomous diagnoses are listed:

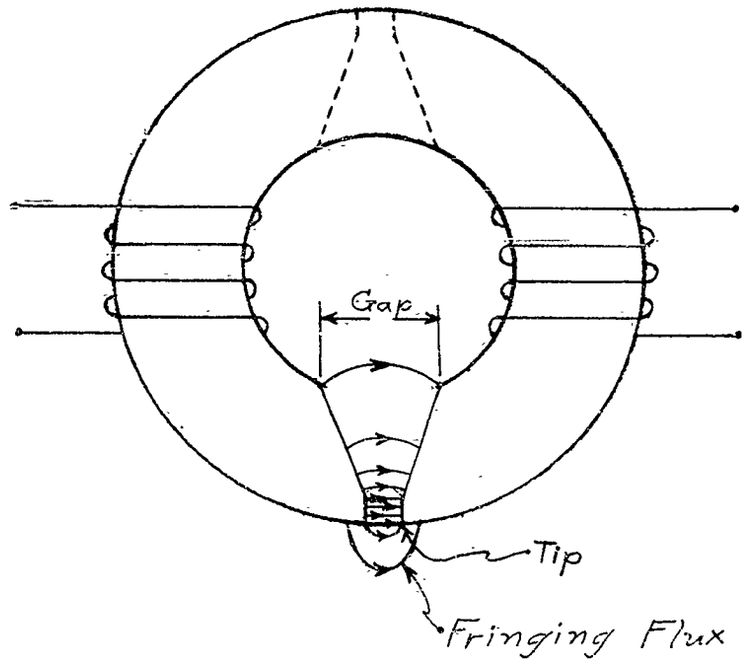

ELECTRONIC COMPUTER PROJECT Institute for Advanced Study Princeton, N.J.		
CONVENTIONAL HEAD (Enlarged View) C-5-2020		
DATE: July 1, 1948	DRAWN BY: Peter Panagos	CHECKED BY: MR

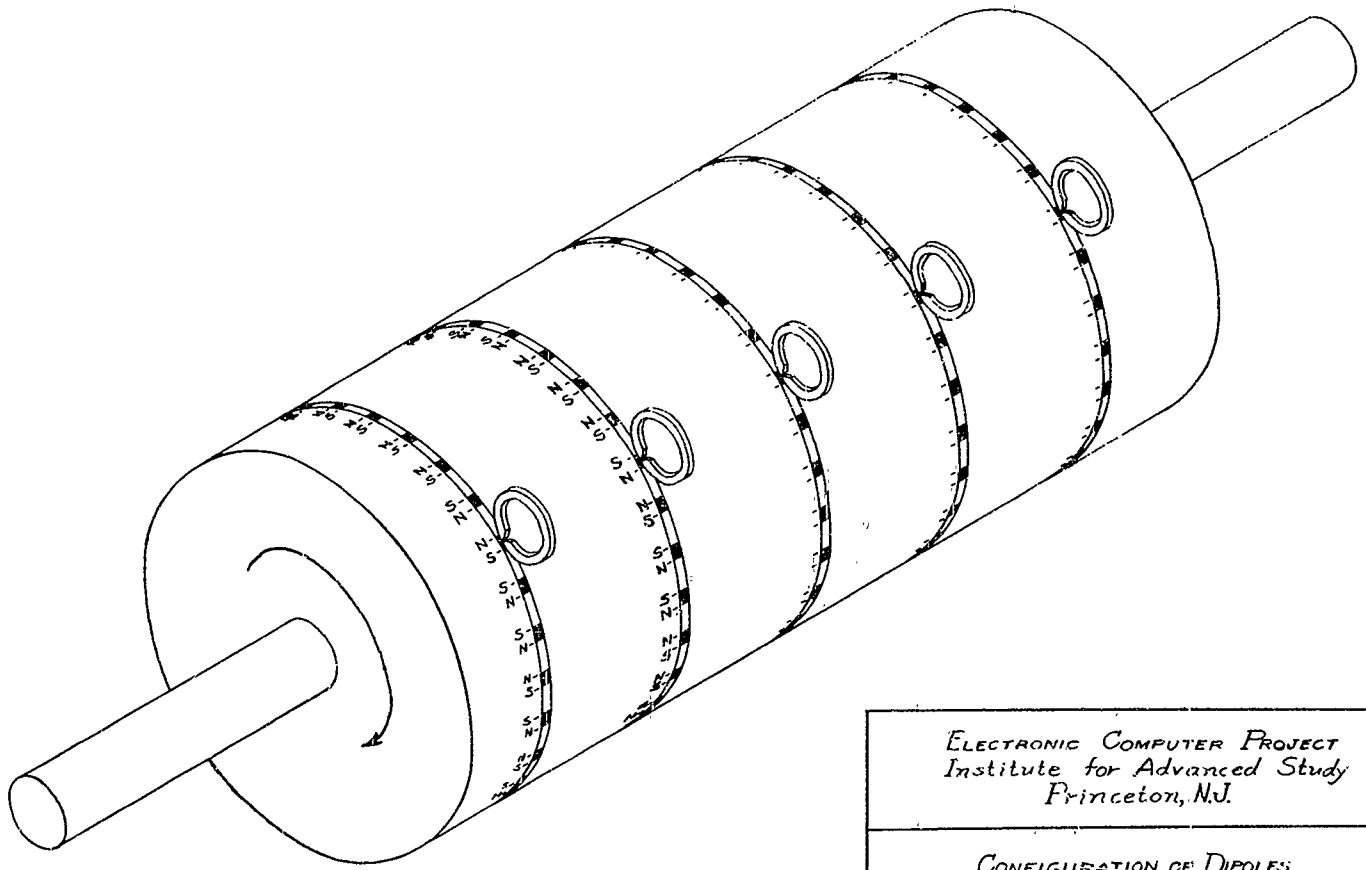

ELECTRONIC COMPUTER PROJECT Institute for Advanced Study Princeton, N.J.		
CONFIGURATION OF DIPOLES ON DRUM MEMORY C-5-2019		
DATE: July 1, 1948	DRAWN BY: Peter Panagos	CHECKED BY: M R

A) Difficult to actuate electrically at high repetition rates,

"--due to high terminal impedance."

"--due to low resonant frequency."

"--due to slow current rise and decay."

"--due to large leakage inductance."

"--due to low efficiency of utilization of the field produced."

B) Difficult to "read out" electrically at high repetition rates,

"--due to high internal impedance when acting as a voltage generator"

"--due to high distributed winding capacitance and low response rate."

"--induced voltage ("gain") falls off rapidly with increasing pulse frequency."

"--unsuited to drive amplifer of appreciable shunt imput capacitances."

C) Serious interaction between nearby heads and with outside disturbances,

"--due to excessive leakage flux."

"--heads too large; two or three times as wide as track used."

"--winding too exposed from all directions."

"--difficult to shield."

"--do not all act the same."

5) Another and quite distinct type of difficulty may be associated with the presence of iron in the "core" or "pole-piece" of the head system. This iron has some "memory" of its own apart from that of the medium being scanned, in the sense that the head acts slightly differently if pulsed twice in succession in the same polerity than if pulsed in alternate polarities; also the core introduces losses which are an increasing function of frequency, and affect the flux distribution; further, the core tends to saturate when sufficient current is passed (to saturate a recording medium not in rubbing contact) as has been indicated. Some data has been given on these points in earlier reports by the I.A.S. group (see #2, #4, $5 cited) and elsewhere, and further programs of study await completion of more immediate objectives.

6) Having directed adverse criticism at available commercial heads in the present application, it may be appropriate to list the desirable attributes which should be possessed by such a head. The most that could possibly be asked is that the behavior of the head should in no direct or indirect way limit the performance of the presently contemplated memory system. It is not easy to formulate realizeable specifications guaranteeing this, in view of the crucial role of the head, the interdependance of design parameters, and our general level of ignorance; but it is believed that most of the limitations would lie elsewhere if the head would:

A) Be capable of operation from, and into, easily realizeable external electrical circuits at a repetion rate of one megacycle.

This implies low terminal impedance; specifically, low enough to afford--

A-1) Recording current rise and fall time on the order of a fraction of a microsecond upon application and removal of perhaps 100 volts.

A-2) Reading out as a voltage generator, to drive a low impedance transmission system--say a cable and amplifier imput capacitance on the order of 10 to 100 M.M.F. without appreciable attenuation.

B) Interaction between heads when recording and sensitivity to external field disturbances when reading should be as low as possible.

This implies low stray field and leakage flux, accompanied by relatively close coupling with the magnetic medium to be inscribed; specifically:

B-1) Recording at normal current strength via any head shall not produce any appreciable interaction or effect upon the track of neighbors located as close as perhaps 1/4 inch center to center.

B-2) No appreciable increase in noise level due to pickup from normal stray fields of the laboratory.

C) Heads should be simple to construct and maintain, inexpensive and compact enough to permit ready arrangement in gangs, etc.

D) Heads must perform uniformly and interchangeably.

IV. The Single-Filament Head

1) It is quite difficult to proceed in any direct manner from the listed specifications to a unique design of the head without becoming entangled with technological details such as the behavior and disposition of the magnetizeable medium, the geometry of the recorded dipoles, the shape of the read-out voltage wave, response characteristics of the reading circuits, criteria of signal recognition and of noise rejection, etc. Effort has been made and is continuing in the direction of a thorough analysis of these variables, and of checking the relationships and exploring empirical parameters by experiment. This aspect will later be the subject of a technical monograph; meanwhile a few rough appraisals of the basic arguments, and crude calculations skirting many details may suffice to focus attention on a particularly simple head design; one which promises to satisfy the listed specifications, and may in fact be close to an optimum.

2) If some value be set for the peak signal voltage to be applied to the head during recording, and if the time interval of application be fixed, then under idealized conditions the total flux which may be produced is also limited, and is inversely proportional to the number of turns "N" in the exciting winding of the head. This results from the fact that the back e.m.f."e" (self-induced) will not exceed the applied voltage

$$V \geq e = -N \frac{d\Phi t}{dt}$$

whence

$$\int_{t_0}^{t_1} e\, d\, t = N \int_{\Phi t_0}^{\Phi t_1} d\Phi_T = \text{const.}$$

3) In any head design part of this flux Φ_L strays uselessly about the conductors of the winding, giving rise to a "leakage" self-inductance "L" while the remainder Φ_1 links the material to be inscribed and gives the inductive effect "l". This separation of the total flux into two components suggests an equivalent network representation of the recording head by means of the two inductances "L" and "l" in series; it being understood that "L" has a fixed, non-retentive flux path while "l" has a moving core of high retentivity, the problem of design is then to absolutely minimize "L" and to maximize a particular functional aspect of "l"; this aspect depending upon the characteristics of the recognition process applied to the read-out signal.

4) Consider now an electrical conductor lying near a magnetizeable surface -- <u>any</u> magnetizeable surface, either that of a core assembly or that of the recording medium proper. If the separation of the axis of the conductor from the surface be "d", then the field intensity at the nearest part of the surface can readily be calculated, and is in fact:

$$H = \frac{.2I}{d} \text{ oersted.}$$

Clearly both the local intensity of magnetization of the surface, and the total flux produced in the surface are greatly increased as "d" is reduced;

these are essentially the useful induction "l". The leakage inductance "L" consists of all flux lines which can couple the current stream in the conductor in the space without the surface; minimizing the separation "d" clearly also reduces this unwanted term.

5) Many over-simplifications exist in the above example, but it is thought that the implied conclusion is substantially true; namely, that throughout a significant range of useful conditions the best ratio of l/L is obtained by means of a single conductor of small diameter held as close as possible to the primary magnetic recording surface. If, for example, a prototype geometry of this sort be used on a magnetic core which in turn acts on the recording surface, then additional leakage "L" is contributed by the core throughout its length and especially where the core relays the flux to the recording surface. If a multi-turn conductor system is compared, new leakage terms due to mutual inductances are introduced:

$$L' = L_1 + L_2 + 2M_{12}$$

Special circumstances can certainly modify these implications, such as the possibility of more completely surrounding the conductors by magnetic material. Discussion of these variants will be undertaken at a later occasion.

6) The local field required to magnetize typical commercial magnetic recording materials, which have a coercive force in the vicinity

of 250 oersteds, is certainly not more than three times this value. To produce 750 oersteds in a 1 mill diameter conductor spaced 1 mill from the surface of the medium requires (by the relation of paragraph 4 above) about 14 amperes. This current constitutes a trivial load for the one mill wire if applied for durations on the order of microseconds; roughly, the treating per pulse is in the vicinity of a few microgram calories and can easily be dissipated or led off by conduction.

7) A single wire head of this type, perhaps 1/4 inch in length, would then be perfectly capable of recording with adequate field strength; and due to the inherent fineness of the implied geometry, there is every reason to expect magnetic patterns in the recording medium having very sharp pattern definition. The self inductance of such a wire is certainly too low to measure and is probably below a micro-henry. This is not so low as to constitute an extravagance, for by the relationship

$$e = L \frac{di}{dt}$$

it may be seen that to produce a current of 14 amperes in a time of 1 microsecond and through an inductance of one microhenry requires overcoming a back e.m.f. of 14 volts.

8) The single filament head thus promises low terminal impedance and therefore satisfactory recording performance at high repetition rates; also, it may be expected to be unaffected by even relatively large shunt capacitance when "reading out." The peak voltage it may be expected to furnish when "reading out" will depend upon the strength of polerization

of the magnetic medium, the relative velocity of the medium, and the sharpness of definition of the recorded pattern. Due to the use of only one strand, this voltage may be expected to be low, but all other factors are favorable, especially the essentially high constant rotational speed of the drum. The coupling with the magnetizeable surface of the drum can certainly be expected to be high, and pickup from stray sources to be low. If the single-filament heads be arranged with their axes all in line, and perpendicular to the circumferential paths searched, then the interaction between adjacent heads can be expected to be almost negligible and confined primarily to the lead wires.

9) If the effective length of the wire in the single-filament head is about 1/4 inch, a dense array of read-write heads may be achieved. A point particularly to be remarked is that the simple concentric geometry of these heads makes alignment simple and adjustment is needed only in clearance and angular position, so that several stations can be operated interchangeably, to read and write in the same path on the medium.

V. Species of Variables Studied

1) In the preceeding discussion the attempt has been made to clarify the problems of designing the magnetic inner memory by separating the variables into relatively independent groups. For example, in secton II the scan-rate "$" of the memory was defined entirely by the total memory capacity and required access time:-

$$\$ = \frac{M\,W}{a} \quad \text{digits per second}$$

where M is the number of words, W the number of digits per word and "a" the access time in seconds. This is an essentially chronometric quantity and has nothing whatsoever to do with the geometry of the head, performance of the magnetic medium, pattern and density of stored pulses, etc. except by remote implication. It does define quite directly certain performance requirements, such as the number of heads "h" required if the maximum scan rate $* of each reading and writing head is known.

$$\$^* \geqq \$/h$$

Likewise the organization of the "read in" and "read-out" external circuitry, including amplifers, pulses, counters, timers, etc. is essentially dependent upon the factor $, although the detailed design of the circuit components must be compatible with the operational characteristics of the heads and other elements linked by the circuitry.

2) Another class of variables may be isolated in which geometry plays an essential role. The most obvious example of geometric parameter is the recording area "A" of the magnetizeable material which must be scanned in order to provide the required capacity. It

is useful to consider the density "d" of digits per square inch, and by analogy with the above relationship to define:-

$$A = \frac{MW}{d} \quad \text{square inches}$$

where the dimensions of the elementary memory cell occupied by each dipole must be

$$(\text{length} + \text{safety margin})\ (\text{width} + \text{safety margin}) = \frac{1}{d}$$

Arguments of similitude readily indicate that the entire scale of the design is set by "d" and the specified capacity; however, "d" is a more elusive quantity than might be supposed, since not only does choice of "d" specify the necessary "A" (if digit capacity be fixed) but also the scale implied by A affects the values of "d" achievable in practice; and this last is by no simple relationship, to cite an example, the length (or linear "packing"density) of the magnetic spot depends upon the clearance which may safely be preserved between head and surface of the magnetic medium whereas the practical range of this clearance is (due to effects like temperature expansion, etc.) itself dependent upon the geometric scale of the apparatus.

3) A third variety of variables is the static-kinematic relationships of the mechanical structure; for example, the peripheral stress in the rotating cylinder due to centrifugal force must not exceed the elastic limit; also the geometry must not permit unacceptably large unintended distortions, as by vibration of the head mounts, temperature

coefficients, warpage, etc. Most of these factors are quite amenable to design calculations and quite definite upper limits are set by the known properties of the materials involved. However, such questions as bearing life at very high speed (12,000 or more R P M) present some problems of prediction and do not have sharp boundary values.

4) In any such artificial separation of a complex interrelated group of variables, the chief advantage is conceptual, and in arguing about each group the others are assumed fixed and known. Even to manipulate within one of the three groups with the others fixed tacitly assumes an interchangeability which is not strictly justified; for example, the disposition of magnetic area "A" is unrestricted only if the disposition of heads among the paths scanned is completely fluid; also the number of heads reading simultaneously only if the disposition of "total amplifer capacity" in pulses per second is permutable. The validity and signifigance of these points will be more carefully scrutinized later.

5) All of the variables of the three species indicated are being studied; computationally where feasible; otherwise experimentally as the design of the unit proceeds, and a summary of some of these experimental results appears in the sections of this report which follow. The policy adopted in the concurrent design is to provide ample margin of adjustment so as to assure achievement of at least the limited performance specified.

VI. Experimental Investigation of Performance of Single Wire Head

As indicated in the previous discussion, the scheme of "reading out" magnetic pulses by means of the same head as when recording leads to a signal voltage of a form corresponding to time differentiation of the magnetic flux. In general this will be a pair of voltage pulses, the sign sequence of which is determined by the polarity of the recorded magnetization, and the peak value by the maximum rate of change of flux linkage with the conductors of the head system.

At constant relative velocity between magnetic medium and head conductor system, the "span" or duration of this voltage pulse-pair is determined by three factors:

1) The "tapering" or rate of decline of the recorded flux at the ends of the dipole (not span of dipole) together with the "tapering" of the coupling coefficient at the entering and departing extremities of the head.(not span of the head)

2) Added to this is the geometric span between the (mean) extremities of the recorded dipole (which by inference is related to the span of the head)

3) Also added to this is the "blurr" or duration of the excitatory current pulse during the recording process.

By holding the magnetic medium stationary relative to the head during recording,(3) is reduced to zero, the value to which it may in the limit be made to approach by reducing the duration of the recording pulse.

By using a head of negligible width dimensions it is possible to explore the achievable dipole span and to estimate the extremities of the flux pattern. Results of experiments along these lines are discussed next.

All of the studies of the performance of the single wire head were made with a high speed magnetic performance tester (called "Pfrotus" and described in the Interim Progress Report on the Physical Realization of an Electronic Computing Instrument, Institute for Advanced Study, 1 January 1947). This tester consists of a bakelite disc of 30 inch periphery and a mechanism for rotating it at high speed. Magnetic tape 1/4" wide was glued to the disc and the recording head mounted above it. The single wire head shown in Photograph 1-a was used for the first tests. It consists of a piece of bakelite with niches at each end to hold the wire in position. The wire is glued to the bakelite and soldered to the lugs at the ends. Drawing C-5-2018 shows the plate which holds the head in position above the rotating disc. The adjustments on this plate make it possible to tilt the head so that the wire is parallel to the axis of the disc and to raise and lower the wire to an accuracy of 1/10 mil (0.0001").

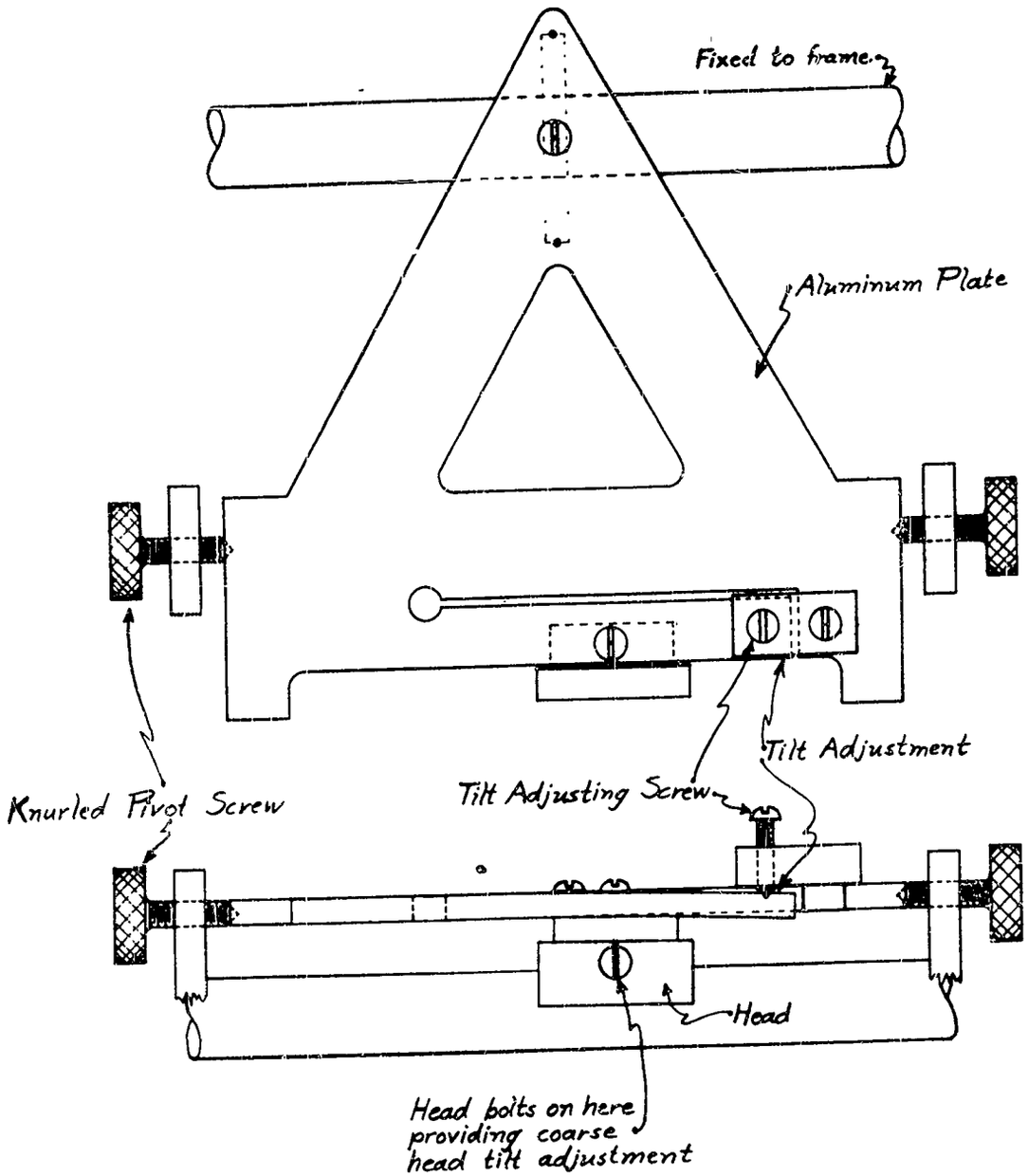

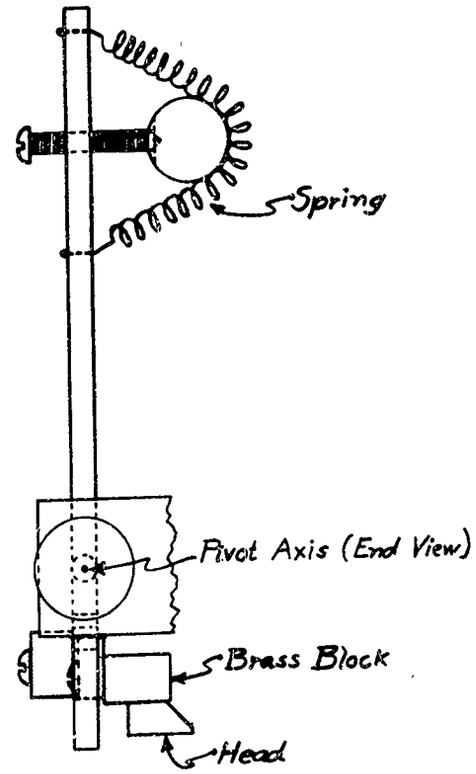

ELECTRONIC COMPUTER PROJECT
Institute for Advanced Study
Princeton, N.J.

EXPERIMENTAL PLATFORM
FOR SINGLE-WIRE HEAD.

C-5-2018

DATE: July 1, 1948	DRAWN BY: Peter Panagos	CHECKED BY: MR

SCALE: 0 1 2 3 4 INCHES

6.1 Static Tests on Brush Tape BK 914

Tests were made to determine the permissible packing of pulses on Brush Tape BK 914 under various recording and reading circumstances. For this purpose dipoles were recorded on the tape with the disc stationary by discharging a capacitor through the head. The recorded dipole was then studied by rotating the disc and picking up the signal with the same head. This signal was amplified, put on the oscilloscope, and photographed. The peak-to-peak amplitude and the span of the pulse were then determined by measuring the photograph. It was experimentally verified that the peak voltage induced in the head is proportional to the speed of the magnetic material past the head, and therefore amplitude measurements were all reduced to microvolts at a standard peripheral speed of 1000 inches per second. What is herein called the "extrapolated length" (see Drawing C-5-2021) is taken as a criterion of permissible safe packing, so that the reciprocal of this gives the allowable pulses per inch. That the extrapolated length is a signifigant criterion of maximum packing is shown by the experimental results of the next section. It should be kept in mind, however, that this criterion does not necessarily set a safe upper limit of <u>maximum</u> packing, but that in actual practice some lower value will probably be used to give a safety factor of sufficient

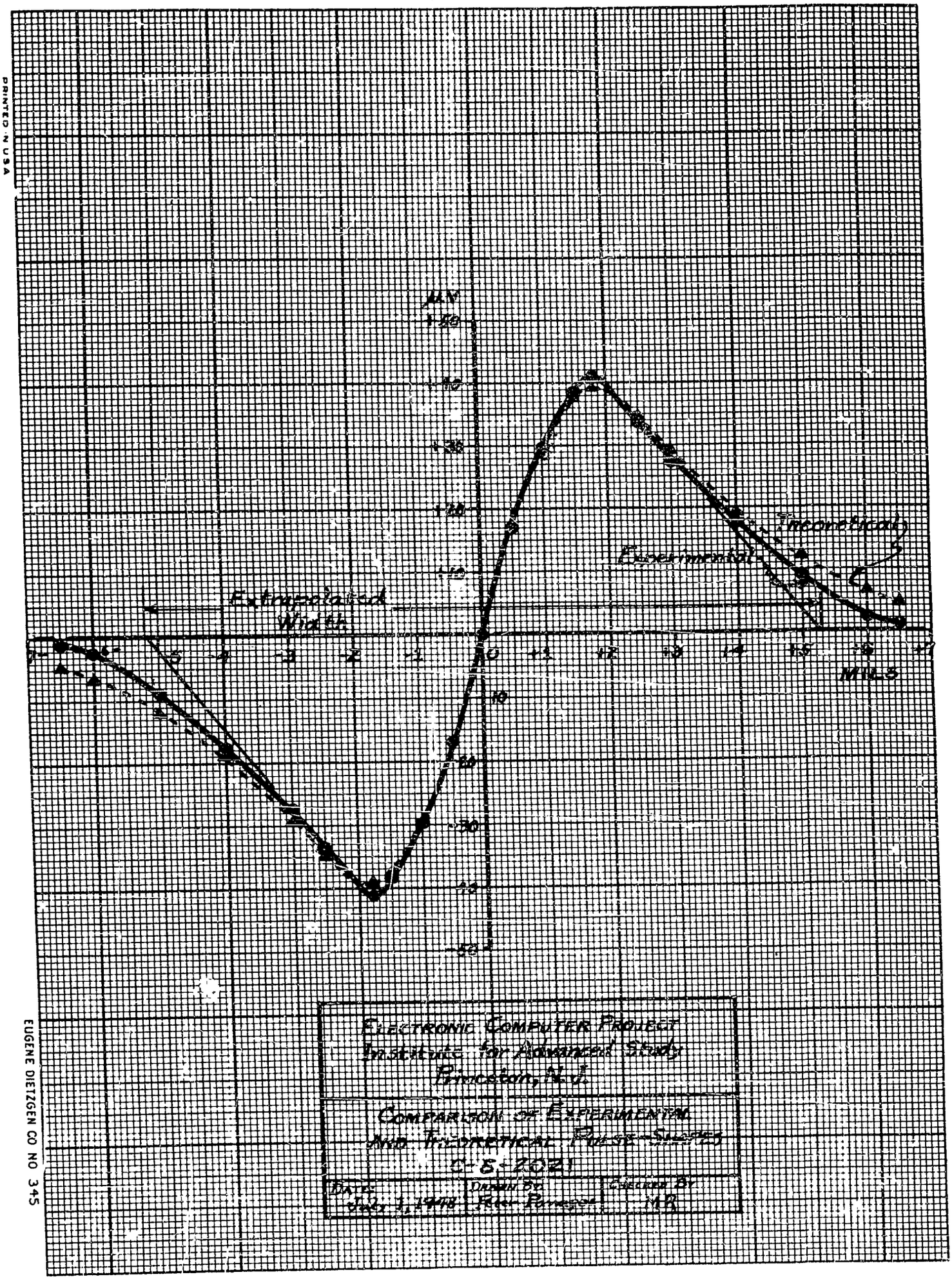

PRINTED IN USA
EUGENE DIETZGEN CO NO 345

reliability.

Pulses were recorded and read with wire heads of diameters of 3 mils and 1 mil, and with various recording currents, recording spacings, and playback spacings. The data of Tables I, II, and III were taken with the 3 mil head having a 3 mil wire. Table I (see also Tables IV and VI) gives the results for various recording currents (other factors being kept constant) and shows the effect of magnetic saturation on output voltage and pulse spacing. Table II (see also Table VI) gives data on dipoles recorded with various head clearances (the distance from the wire to the magnetic medium when recording) and shows how the size of the dipole depends on the position of the recording head. Table III (see also Tables V and VI) shows the effect of playback head clearance (the distance from the wire to the magnetic medium when reading) on output voltage and pulse span.

Table IV gives sample results obtained with the 1 mil diameter wire head. A comparison of this table with the previous ones shows the superiority of 1 mil wire over 3 mil wire. With a 1 mil record and playback spacing, 10 amperes through the 1 mil head produces a dipole which induces an output voltage of 100 microvolts, whereas with

Magnetic material	Wire size (mills)	Record		Playback		
		Current (amperes)	Spacing (mills)	Spacing (mills)	Peak-to-peak amplitude (uv/1000"/sec.)	Pulses per inch
			TABLE I			
BK 914	3	10	1	2	22	65
BK 914	3	30	1	2	95	42
BK 914	3	50	1	2	106	39
			TABLE II			
BK 914	3	30	1	2	95	42
BK 914	3	30	2	2	90	50
BK 914	3	30	4	2	64	46
BK 914	3	30	8	2	20	35
BK 914	3	10	1	2	22	65
BK 914	3	10	2	2	18	65
			TABLE III			
BK 914	3	30	1	1	106	52
BK 914	3	30	1	2	95	42
BK 914	3	30	1	4	62	35
BK 914	3	50	1	1	123	42
BK 914	3	50	1	2	106	39
BK 914	3	50	1	4	78	35
			TABLE IV			
BK 914	1	5	1	1	66	118
BK 914	1	10	1	1	108	87
BK 914	1	15	1	1	119	83
			TABLE V			
MM SLP	1	10	1	1	104	57
MM SLP	1	10	1	2	81	49
MM SLP	1	10	1	3	65	50
MM SLP	1	15	2	1	72	60
			TABLE VI			
MM 2SL	1	10	1	1	98	98
MM 2SL	1	10	1	2	82	92
MM 2SL	1	15	1	1	140	92
MM 2SL	1	15	1	2	108	73
MM 2SL	1	15	2	2	40	51

the 3 mil head 30 amperes is required to develop the same output voltage. Furthermore, under these circumstances the 1 mil wire records 90 pulses per inch while the 3 mil wire records only 50 pulses per inch. It should be noted from Table IV that 5 amperes through the 1 mil head records 120 pulses per inch. This figure must be discounted, however, since the output amplitude is not only low but also is very sensitive to variations in recording current, presumably because the medium is not saturated with a 5 ampere recording current.

6.2 Static Tests with Other Media

The results given in the last section show that a satisfactory system could be built using Brush Tape BK 914, a 1 mil diameter head, and a 1 mil clearance. However, an investigation of other materials was made to see if these results could be surpassed. The results for Minnesota Mining Tape SLP 11006L4A given in Table V show it to be definitely inferior to the Brush tape. Minnesota Mining Tape 2SL 10012L-29 is somewhat superior to the Brush tape; see Table VI. With this tape, a recording current of 10 amperes, and clearance of 1 mil, it was found possible to record 100 pulses to the inch each giving an output of 100 microvolts. Table VII summarizes the results for the three materials investigated under identical record and read circumstances. Photographs 1-c and 1-d show the output voltage pattern of Minnesota Miners Tape SLP and Minnesota Miners Tape 2SL, respectively, under identical conditions.

These results are the best we have obtained to date. Further investigation of materials, coupled with a study of methods of placing materials on the surface of the drum, (see Section 6.3), is in process.

TABLE VII

Magnetic material	Wire size (mills)	Record		Playback		
		Current (amperes)	Spacing (mills)	Spacing (mills)	Peak-to-peak amplitude (uv/1000"/sec.)	Pulses per inch
BK 914	1	10	1	1	108	87
MM SLP	1	10	1	1	104	57
MM 2SL	1	10	1	1	98	98

6.3 Dynamic Tests with Minnesota Mining Tape 2SL 10012L-29

A procedure was next developed to study the performance of the single wire head under dynamic recording conditions, i.e. with the disc moving, using the best tape we have so far found. For this purpose a pulser -- to be described in Section 4.1 -- was constructed. When stimulated with a single pulse it produces a sequence of from 1 to 50 pulses, each of duration 0.2 microseconds, of amplitude 0 to 15 amperes, and spaced from 10 microseconds on up apart. Two pieces of tape were attached to the disc side by side and the double head of Photograph 1-b mounted above them. A single pulse was recorded statically on one of the tapes; when the disc was rotated this could then be used as a trigger pulse to synchronize the pulser just described.

To test the effect of superimposing one recorded pulse on another of the same polarity the disc was set in motion and the pulser triggered by the statically recorded pulse for three or four successive revolutions. The voltage induced in the head by the dipoles thus recorded is shown in Photographs 1-e and 1-t for 100 and 50 pulses to the inch respectively. To test the effect of superimposing a recorded pulse on one of opposite polarity the following procedure was adopted. A sequence of positive pulses was first recorded. Then, by means of the statically recorded

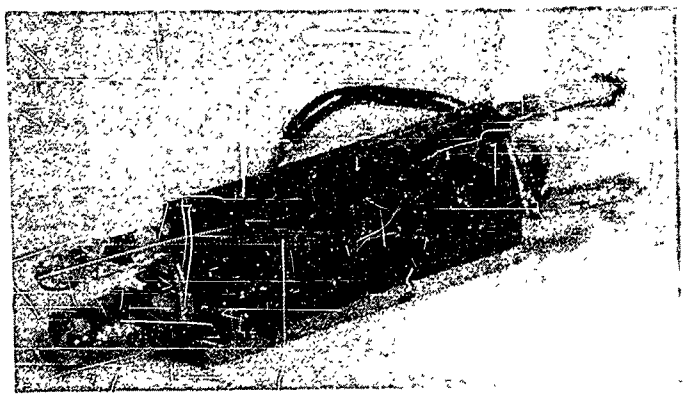

Photograph 1-A
Single Wire Head

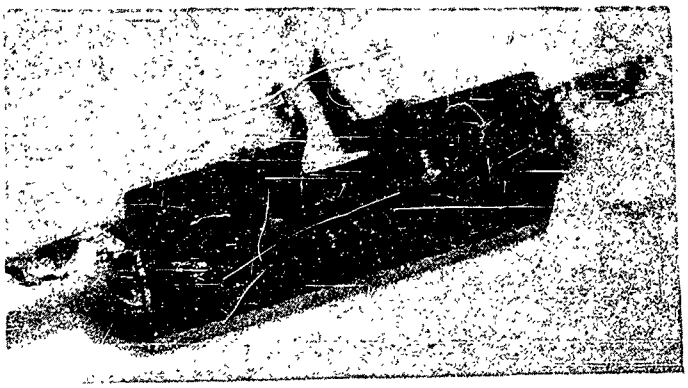

Photograph 1-B
Double Wire Head

Photograph 1-C
Pulse from Minnesota
Mining Tape SL P

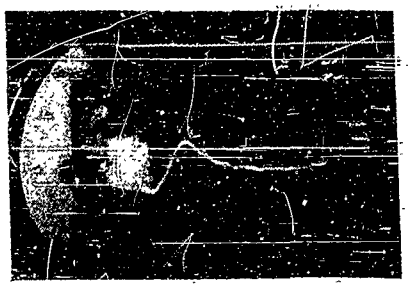

Photograph 1-D
Pulse from Minnesota
Mining Tape 2 SL

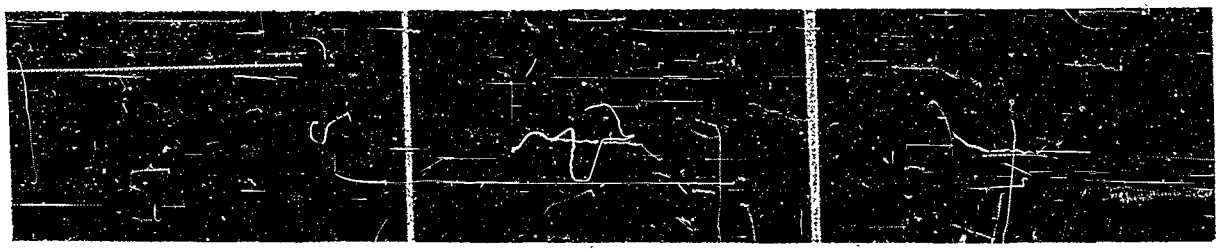

Photograph 1-E Photograph 1-F Photograph 1-G
Effect of Superposition of Dipoles

Photograph 1-H Photograph 1-I Photograph 1-J
Effect of Overlapping Dipoles

pulse a shorter sequence of negative pulses was recorded with the first negative pulse superimposed on the first positive pulse. Photograph 1-g pictures the results at the point where the shorter sequence terminated, i.e. when the resultant sequence of pulses changes polarity. The pulses in this picture are packed 50 to the inch.

These pictures show that at a packing density of 50 pulses to the inch there is a distinct flat between pulses produced by adjacent dipoles of the same polarity and that when two dipoles of opposite polarity are adjacent the voltage produced by them returns to zero between pulses. It is clear that sequences of pulses of arbitrary polarity can be safely resolved at 50 to the inch without any interference due to adjacent pulses. This packing density reflects a safety factor of two to one, for the dynamic tests (as well as the static tests based on the "extrapolated width" of Sections 6.1 and 6.2) show that actually 100 pulses could be recorded per inch.

The pictures of superimposed pulses also show that new information can be recorded where old information is stored without erasing the old. For they show that it is possible, by means of a timing pulse, to induce a dipole of any desired polarity in a region where a dipole of the same or opposite polarity is recorded. This is a great advantage, for it eliminates the necessity of devising a method of erasing information without destroying the adjacent information. The drum system

we are constructing will be provided with extra channels in which timing pulses will be recorded.

Two further dynamic tests which were made should be mentioned. A sequence of pulses of a fixed polarity were recorded on the disc. Then a sequence of pulses of the same polarity but with slightly different spacing were superimposed on these. This shows the effect of error in registration of one dipole on another. The results are pictured in Photographs 1-h, 1-i, and 1-j. The time between the two peaks of a pulse recorded once corresponds to a peripheral motion of 3.6 mils. In Photograph 1-h the distance between peaks is 4.9 mils, indicating that when the second pulse was recorded the dipole was displaced approximately 1.3 mils from the previously recorded dipole. Similarly, in Photographs 1-i and 1-j the distances between the outermost peaks are 7.7 and 8.9 mils respectively. Further investigations of this nature will be made to establish a maximum registration tolerance.

Finally, 100 pulses to the inch were recorded on a given tape and then on the same tape with a layer of aluminum foil glued under it. The results of the two cases were (within experimental error) identical, showing that the use of a non-magnetic metallic drum does not effect the recording.

VII. Experimental Auxiliary Circuitry

1) Experimental Recording Pulse

For the experimental recording studies of the single wire head just described, a pulse source of high current output was needed. To provide full flexibility over the range of variables studied, it was thought convenient to be able to provide an adjustable current from 0 to 15 amperes, available in pulses of about ± 0.2 microseconds duration, and in groups of from 1 to 50 pulses in succession. It was also considered desirable to be able to vary the interval between pulses in a group to range from 10 microseconds to an arbitrarily large value, and to be able to initiate the sequence by either a recurrent or single trigger pulse. In order to generate these pulses with a minimum of construction of new equipment, it was decided to use the Boonton pulse generator as the primary source of pulses, and to reshape and change these pulses as required.

This generator, which is normally a free running source, was altered to allow gating of the internal multivibrator. The common grid return of the multivibrator was disconnected from ground and connected to a panel jack to which could be applied a d-c voltage which was either zero (ground) or quite negative. An auxiliary gating strip (shown in Drawing C-2-1029) was constructed to provide these d-c gating pulses. It consists of a 6D4 trigger tube followed by a

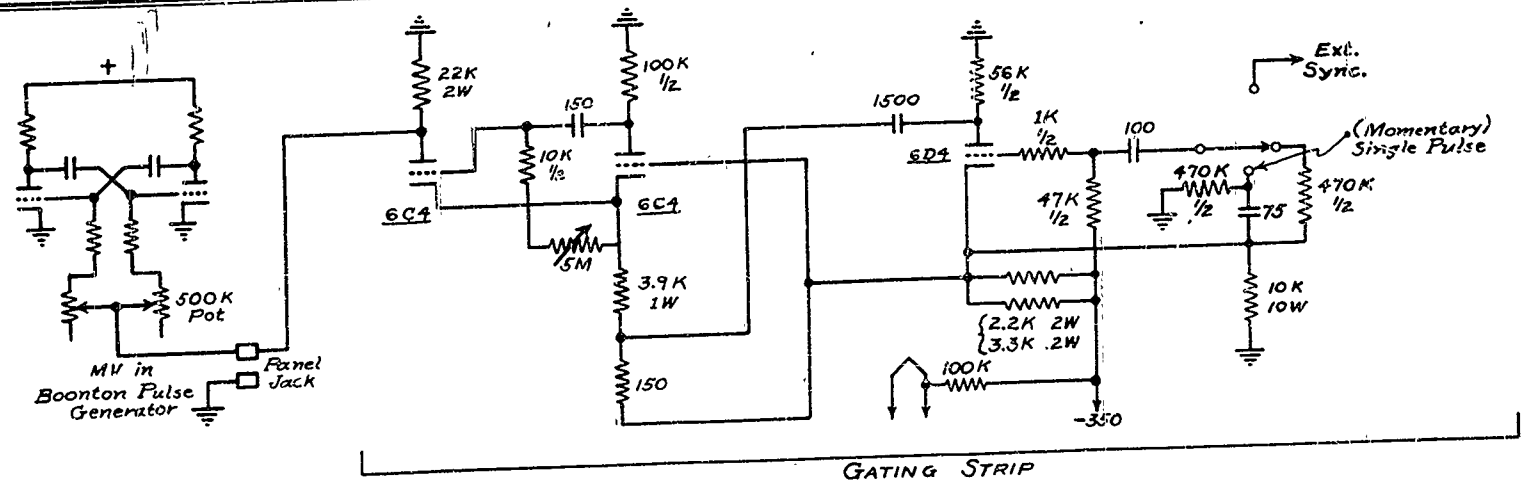

GATING STRIP

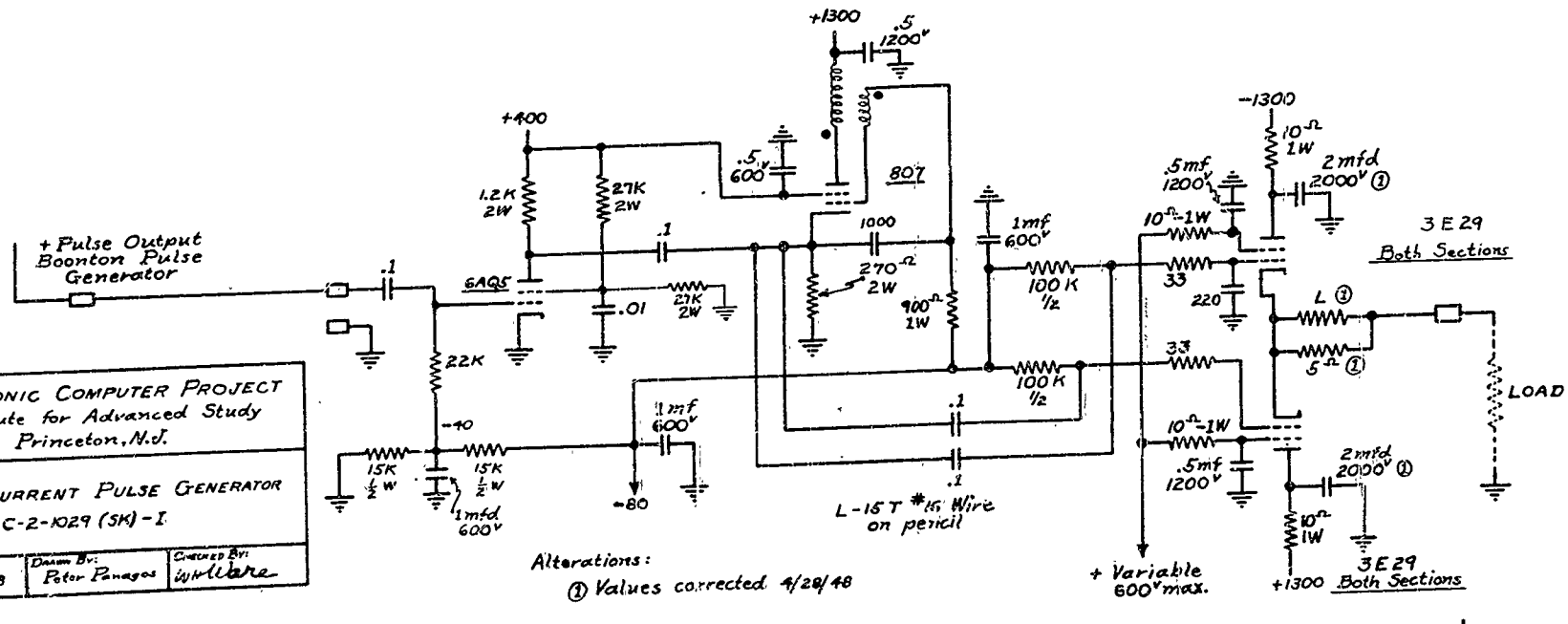

ELECTRONIC COMPUTER PROJECT Institute for Advanced Study Princeton, N.J.		
HIGH CURRENT PULSE GENERATOR C-2-1029 (SK)-I		
DATE 4/25/48	DRAWN BY: Peter Panagos	CHECKED BY: W. Ware

Alterations:
① Values corrected 4/28/48

PULSE GENERATOR

"one-shot" multivibrator which generates the gating pulse at the proper d-c level. The recovery time of this multivibrator (and hence the duration of the gating pulse) is controlled by the variable resister shown in Drawing C-2-1029. The input to this gating strip can be either a recurrent pulse coming from an external source or a single pulse generated by the discharge of a capacitor. The Boonton pulse generator, under the control of the gating strip, generates groups of pulses, the length of the group being controlled by the width of the gating pulse supplied by the gating strip, and the spacing of the pulses within the group being controlled by the free-running rate of the multivibrator in the Boonton generator. The width of the pulses in this group is also controlled by the Boonton generator.

In order that the pulses delivered to the single-wire head shall be of sufficient current amplitude and independent of the input signal, the group generated by the Boonton generator-gating strip combination is fed into a blocking oscillator (tube 807 of Drawing C-2-1029) through a trigger tube (6AQ5). The output of the blocking oscillator drives two 3E29 output cathode followers (all sections in parallel), the cathode load of which consists of a parallel R-L load in series with the single wire head. The additional series resistance in this cathode load was necessary in order to prevent spurious oscillations; the shunt inductance, in order to diminish spurious positive overshoots. The width of the output

pulse is thus determined by the design of the blocking oscillator, and the amplitude of the current in the output pulse is controlled by the screen voltage of the output cathode followers. In order to achieve the required 15-20 amperes in the 3E29 tubes, a plate supply of 1300 volts and a screen supply of about 600 volts was necessary; suitable current supplying capacitors mounted physically close to the tube elements were needed to supply the instantaneous peak currents.

2) Experimental Head Reading Amplifer

The experimental studies of the single wire head reported in the previous section also required the devising of some sort of high gain amplifer suitable for faithful representation of the read-out voltage wave.

An analysis of the output voltage pulses of the magnetic head (see Drawing C-2-2021 and the Appendix) shows that their frequency spectrum extends approximately to 500 kc for a peripheral speed of 1000 inches per second. Hence a video amplifer was needed to amplify these pulses to an amplitude sufficient to permit study on cathode-ray tubes, i.e., to voltages of the order of 10 to 100 volts. Since the output voltage of the head is of the order of 100 microvolts peak to peak, a gain of the order of 10^5 to 10^6 is needed. Moreover, the intrinsic noise level of the amplifier must be sufficiently low to give a reasonably high signal-to-noise ratio.

The design of conventional video amplifiers is treated extensively in the literature and briefly summarized in Terman,

Radio Engineers Handbook, pp. 418 ff. Terman classifies these circuits into two-terminal and four-terminal networks. The latter have the advantage of higher intrinsic gain than the former but are, however, more complicated, difficult to adjust, require more care in construction, and have an undesirably sharp deterioration of phase characteristic at the high frequency end of their response curve. Hence it was decided to incorporate two-terminal networks into the test amplifier. Specifically, the circuit shown in Terman, Figure 51c was chosen because first, the phase characteristic is particularly good over almost the entire pass-band, second, the amplification characteristic is only slightly worse than that of the more complicated circuit of Figure 51d, and third, the capacitance of coil L, could be included in C_3 and hence had no harmful influence as it might in the other circuits.

A three-stage amplifier was built which had an overall gain of about 10^6. This gain can be reduced without introducing phase distortion by means of a potentiometer in the cathode circuit of the second stage. The final stage consists of a cathode follower which serves as a buffer to isolate the impedance of the measuring circuit (meter and oscilloscope) from the rest of the amplifier. Some

difficulties were encountered in the experimental amplifier that was built: - First, the input stage was sufficiently microphonic to amplify bench vibrations and/or 1 kc sound waves in the air to a magnitude comparable to the 100 microvolt input signal. This difficulty was almost completely eliminated by enclosing the amplifier in a box lined with rock wool. Second, the input stage of the amplifier produced a shot noise of approximately 20 microvolts peak to peak. This reduced the signal-to-noise ratio to about 5 to 1. The noise could conceivably be improved by a factor of 3 or 4 by using a triode in the input stage. An alternative method is to increase the amplitude of the input signal by means of a transformer thus permitting operation at lower gain. For this purpose a pulse transformer is being designed by the United Transformer Company. It will have a turns ratio of 100 to 1 and hence should raise the effective signal-to-noise ratio above 100 to 1.

VIII. Modus Operandi and Circuit Organization

1) The necessity of using at least "several" identical recording-reading channels has been remarked elsewhere in this report (II Par.4-6) and arises from the high digit scanning rate ($2x10^6$ per second). It is now appropriate to set some more concrete bounds on this and other variables left unspecified up to this point.

2) It has been indicated that velocities of the magnetic surface on the order of one or two thousand linear inches per second are quite manageable and should introduce no special problems; consider 1000 inches per second, and choose some likely density of recorded digits, say 50 per inch. This would lead to a scan rate of $5x10^4$ digits per second per channel on the drum, and so forty similar channels would be necessary to achieve a scan rate of $2x10^6$ digits per second. This seems a reasonable figure to fix upon for several reasons:

a) It meets the required scan rate under the concurrently pessimistic conditions of digit resolution--of only 50 to the inch (experiments of the previous section indicated twice this figure) and velocity of only 1000 linear inches per second (2000 would still be conservative)

b) It affords more flexibility in the direction of mode of operation; namely, simultaneous parallel read-in and read-out of entire 40 digit words can be effected if desired;

c) Variables known to have sharp upper bounds of performance are underrated in what is probably a consistent manner;

namely heads are operating at not more than 1/5 their limiting speed, while pulse packing density and linear velocity could both probably be doubled which would then approach limits of the head and circuit.

d) A system of 40 odd channels can be built in quite reasonable length--about a foot--without introducing any new types of complications

e) Convenient shaft speeds (6000-8000 RPM) and drum diameters (6-8 inches) promise to achieve more than enough capacity of scanned magnetizeable area.

3) The structure and general expectations of the magnetic drum proper, together with the forty odd reading-recording heads are now fairly well fixed; in fact, they have been built and are presently being assembled and tested and will be discussed in all structural details in the next section. Deferring these details, consider now how such a drum and head system may be operated when completed. Block diagrams I and II indicate in approximate form two modes of operation, which may be seen to be of parallel and of series types. The merits of each deserve consideration.

4) Both systems have in common a counter associated with the timing channel located on the drum. The timing channel could be any sort of geometrical marker rigidly attached to the drum system and having M segments clearly and evenly defined; one of the most convenient and simple of such

ELECTRONIC COMPUTER PROJECT
Institute for Advanced Study
Princeton, N.J.

BLOCK DIAGRAMS I & II
C-3-1068

DATE: Oct. 31, 1948 | DRAWN BY: Peter Panagos | CHECKED BY:

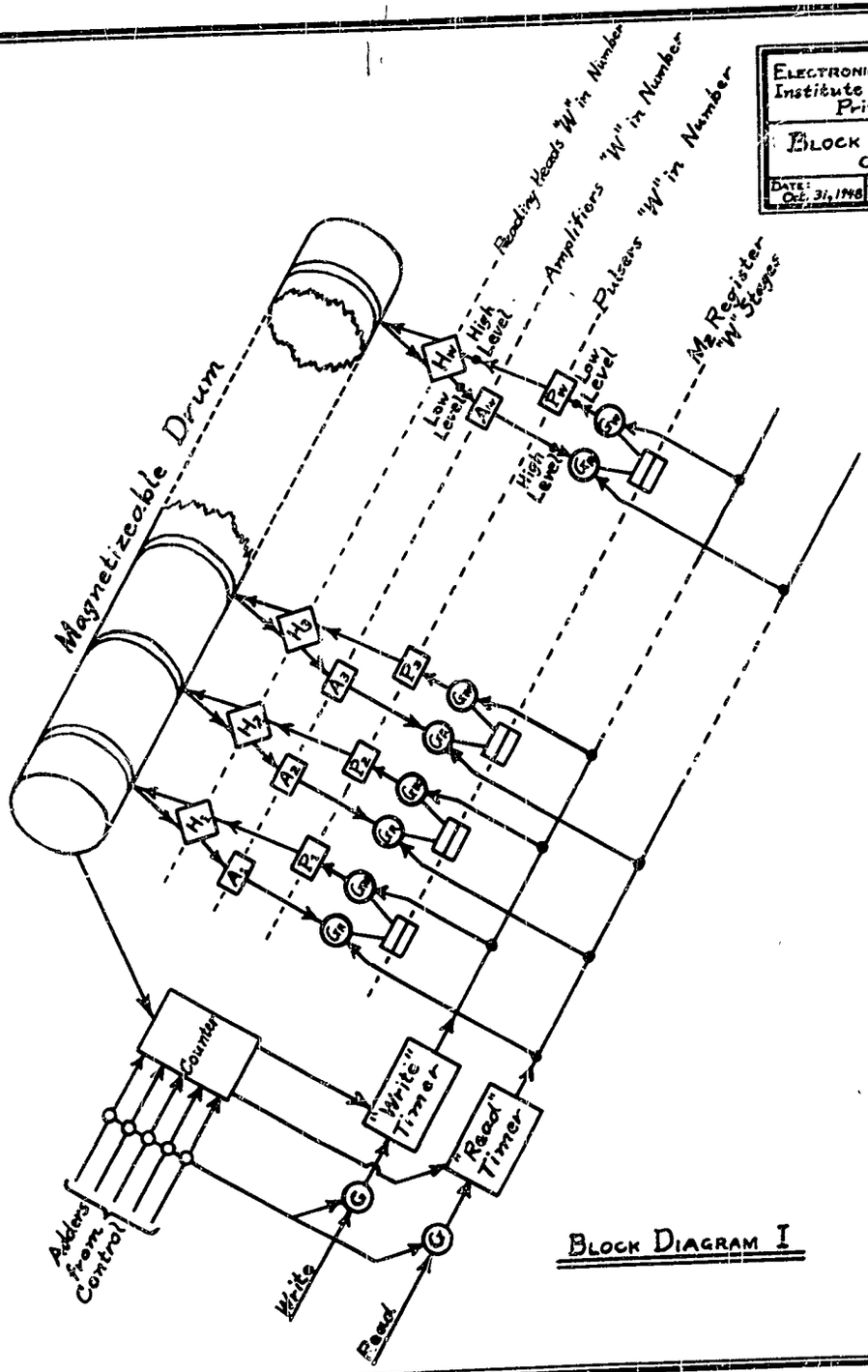

BLOCK DIAGRAM I

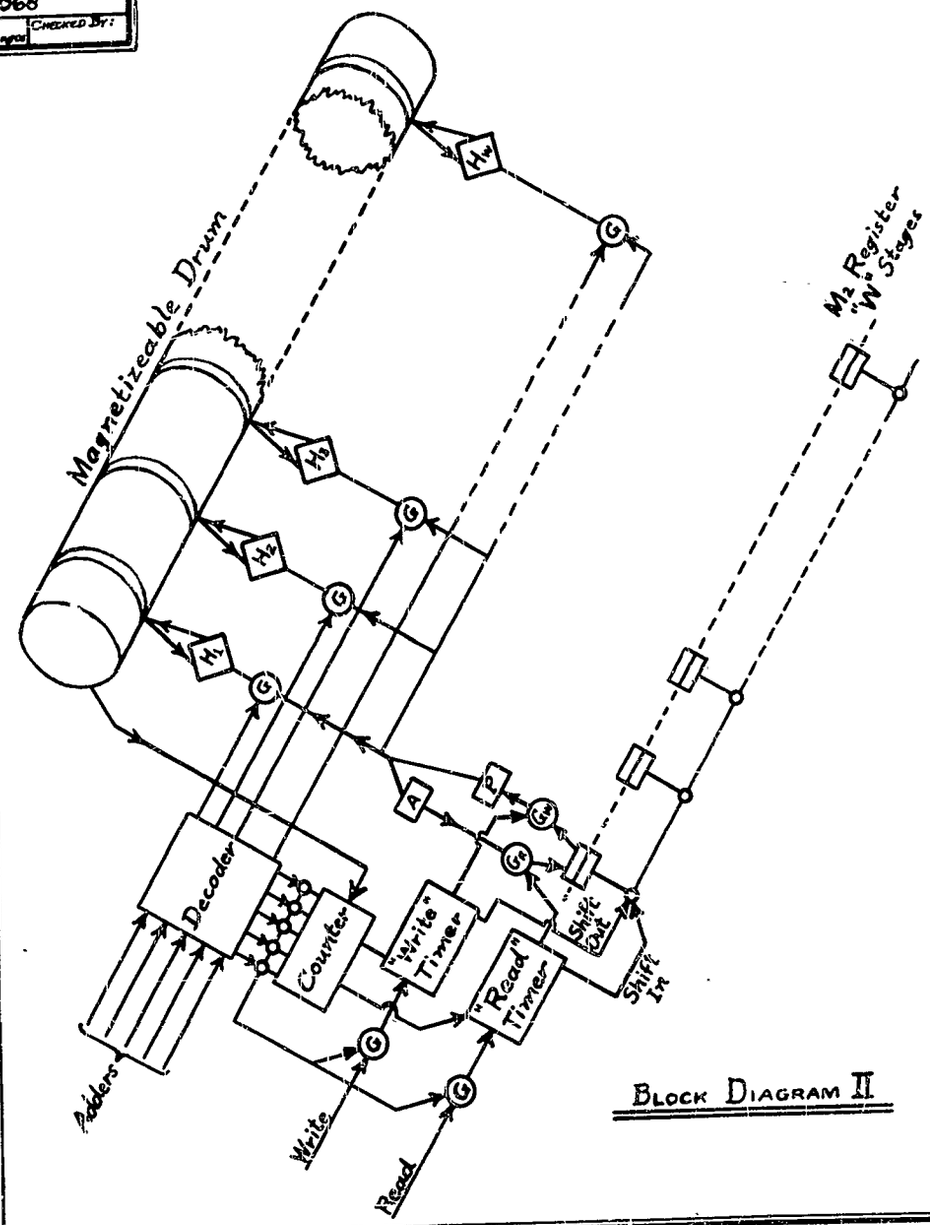

BLOCK DIAGRAM II

schemes is to use a standard recording channel hearing regular marker pulses in the form of magnetic dipoles inscribed under carefully controlled conditions. This marker channel is then read by a standard head and suitable voltage-level increasing unit and operates an electronic counter. The counter must be of "p" stages where $2^p = M$; specifically if 1000 digits be recorded in each channel, ten counter stages would be necessary. The markers in the timing channel would be the same in number and the counter the same in both schemes I and II and the rate of counting in the vicinity of 10^5 per second, which is quite reasonable.

5) Operating from the timing-counter outfit would be a coded-address identifying gate system of essentially the same order of complication in each system, (although differing in details) and several gates to select "read" or "write" orders and also arranged to insure against initialing any order too late in the epoch of the desired memory cell; also a "read" and "write" timer or gate system. These functions would be essentially of the same order of complication and involve the same type of apparatus in both systems.

6) However, from this point on, the two systems differ considerably. System I, which is parallel, requires the availability of a separate recording "Pulser" and also a reading amplifier in each channel, together with a gate connecting the output of the amplifierto each register toggle cell, and a second gate connecting each register toggle cell to each pulser input. Thus "W" amplifiers, "W" pulsers, and "2W" low-powered gates would be required. Where "W" is on the order of 40 digits per word, these numbers

imply formidable banks of vacuum tubes.

7) By comparison, System II (serial) requires only one pulser and one amplifier, together with a single bank of at least "W" gates. The method of inserting "words" into the register toggle bank, and of removing them involves the shifting properties of the register, and specifically only one pair of end-around connections together with a "shift-command" connections would be necessary.

8) Consider now some of the details of this camparison. The series system appears at first right to be very much simpler than the parallel system. However, the series system requires a different word-address decoder, the first operation of which must be to pick out which channel, and the second to locate where in the periphery of this channel a given word sequence is located. This is apt to involve some dozen (more or less) extra gates. Again, if there are M digits around each channel, W digits in a word; then the longest wait for a word will be M + W - 1 (which in the case of a 40 digit word and 1000 digit channel is a negligible increase but under other circumstances may be significant).

9) Again the average duty-cycle of the amplifier and recording pulser is 40 times as great in the case of the series system as in the parallel; also both will have to be capable of repetion rates on the order of 10^5 per second. This rules out certain techniques in each case; for example, although the problem of producing a recording pulser delivering 5 to 10 amperes for a fraction of a microsecond is solvable by known techniques and either one or forty such units can certainly be produced,

yet every possibility of reducing complication should be explored, and in particular with parallel operation at .01 second cyclic rate, pulsers consisting of a single gas thyratron are distinctly possible and could de ionize readily in a millisecond so as to be ready for the next occasion. These tubes could not be used for the sequence of 40 possible pulses spaced 10 microseconds apart as required by the series arrangement; in fact, this system calls for quite refined design in hard-tube blocking oscillator techniques.

10) There is also the gating problem in the series system; in each channel a gate must be supplied capable of handling the full recording current of 10 amp. without attrition, and also of handling the low voltage level of the amplifier input without introducing noise. This is no easy set of specifications to meet, especially if strictly loyal to vacuum tube techniques. Within the realm of possibilities are high speed electromagnetic relays, which can easily be obtained and will operate in time intervals of 1 millisecond or less; also surface-layer rectifier arrangements merit some consideration.

11) While no insuperable, or even very severe problems are presented by these alternatives it is nevertheless quite clear that alternatives exist involving considerable numbers of circuit elements, and that some thought should be devoted to this problem before proceeding. No delay is expected in realizing suitable means, and the project is at the closing date of this report less than four months old, so that decision

on these questions is only now becoming timely. A more careful analysis, too incomplete to be reported at this date, is currently in process. The counting-timing system, and method of triggering pulses on the signal from the commutating channel also are being analyzed.

IX. Design of the 44 Channel Drum System

This section will be devoted to a description of an internally supported 44 channel drum system. At the time of the writing of this report (July 1, 1948), the progress toward the physical realization of this drum system is as follows:

1. The drum has been designed, built and mounted with its drive motor and step-up pulleys.

2. The design of a multiple head consisting of 44 single-wire heads mounted in one horizontal row has been completed and a unit is now in the process of being built. Therefore the drum can be illustrated by means of photographs as well as drawings, whereas a description of the multiple head must be based, for the present, on drawings alone.

8.1 Design of the Rotation Drum

Photograph 2 and Drawing C-5-2013 illustrate completely the construction of the drum. Figure A is a photograph of the completed drum with its drive motor and step-up pulleys. The two end bearing blocks of the drum are made of 2" thick aluminum and are mounted on a section of heavy steel channel. The drive motor and step-up pulleys are also mounted on a section of steel channel. These two steel mounting channels are separated from the base plate by strips of a standard rubber vibration mount so that the drum and its drive system are floating on rubber.

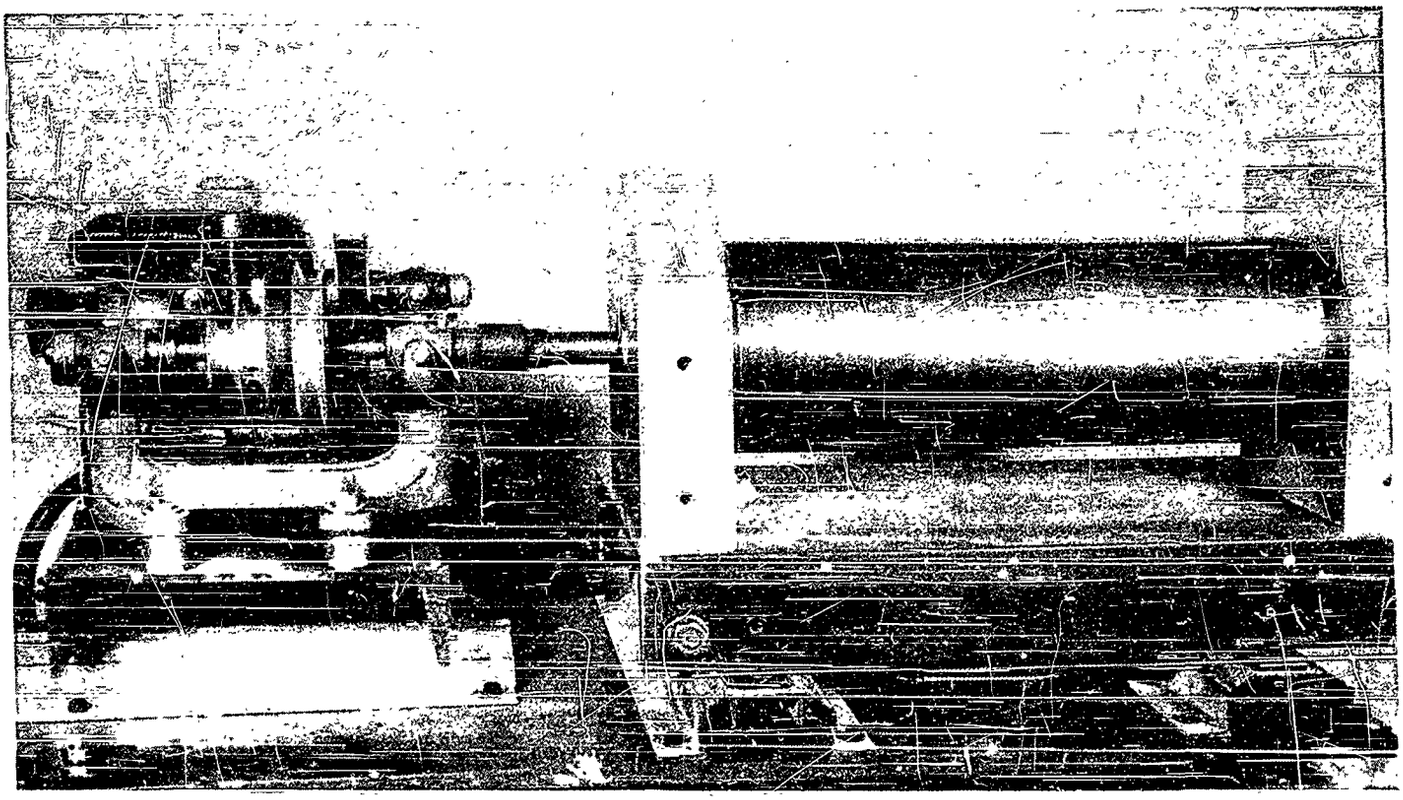

Photograph 2-A
Five Inch Drum with Experimental Drive Motor and
Step-Up Pulleys

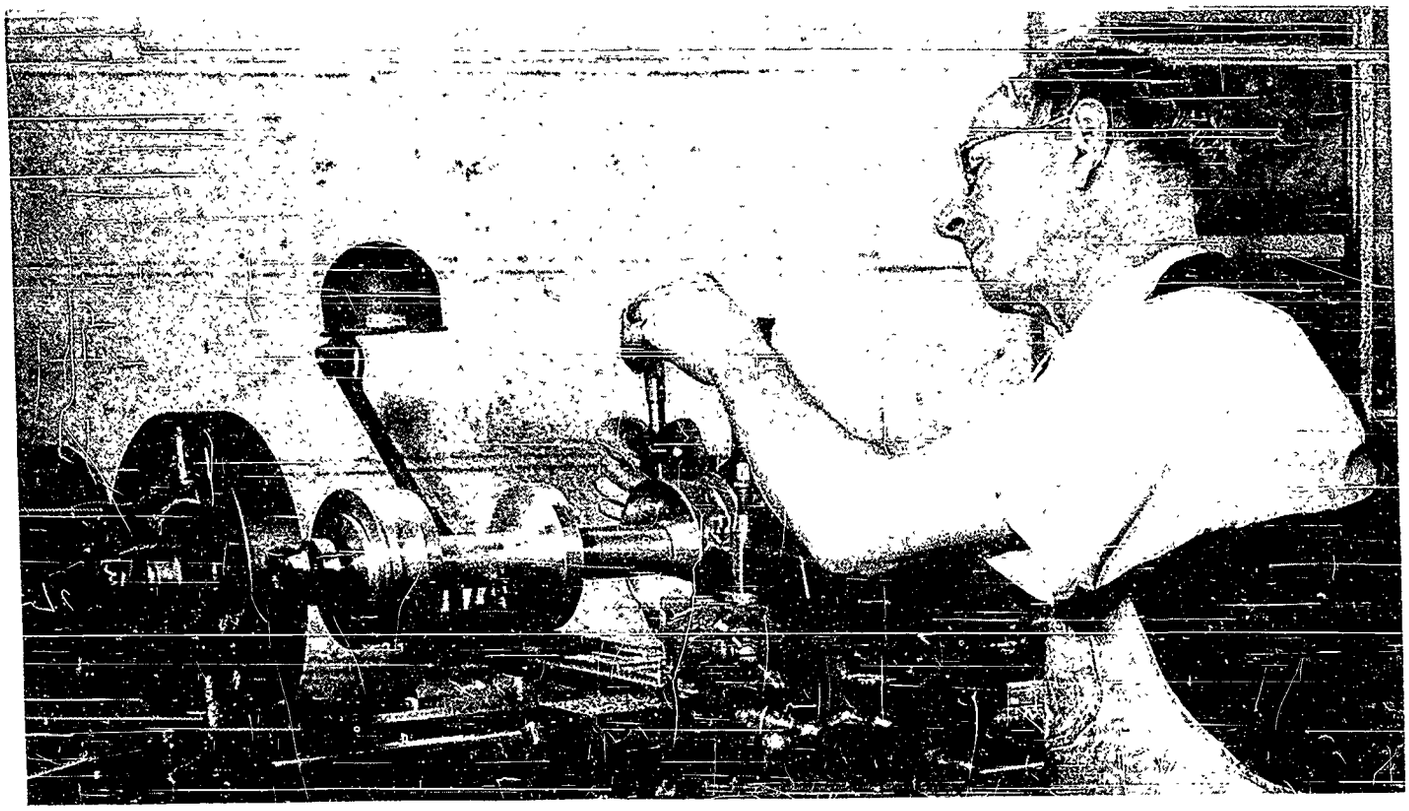

Photograph 2-B
Drum Assembly with Outer Tube Removed
showing Expanding Mandrel and Interior
Tube Supports

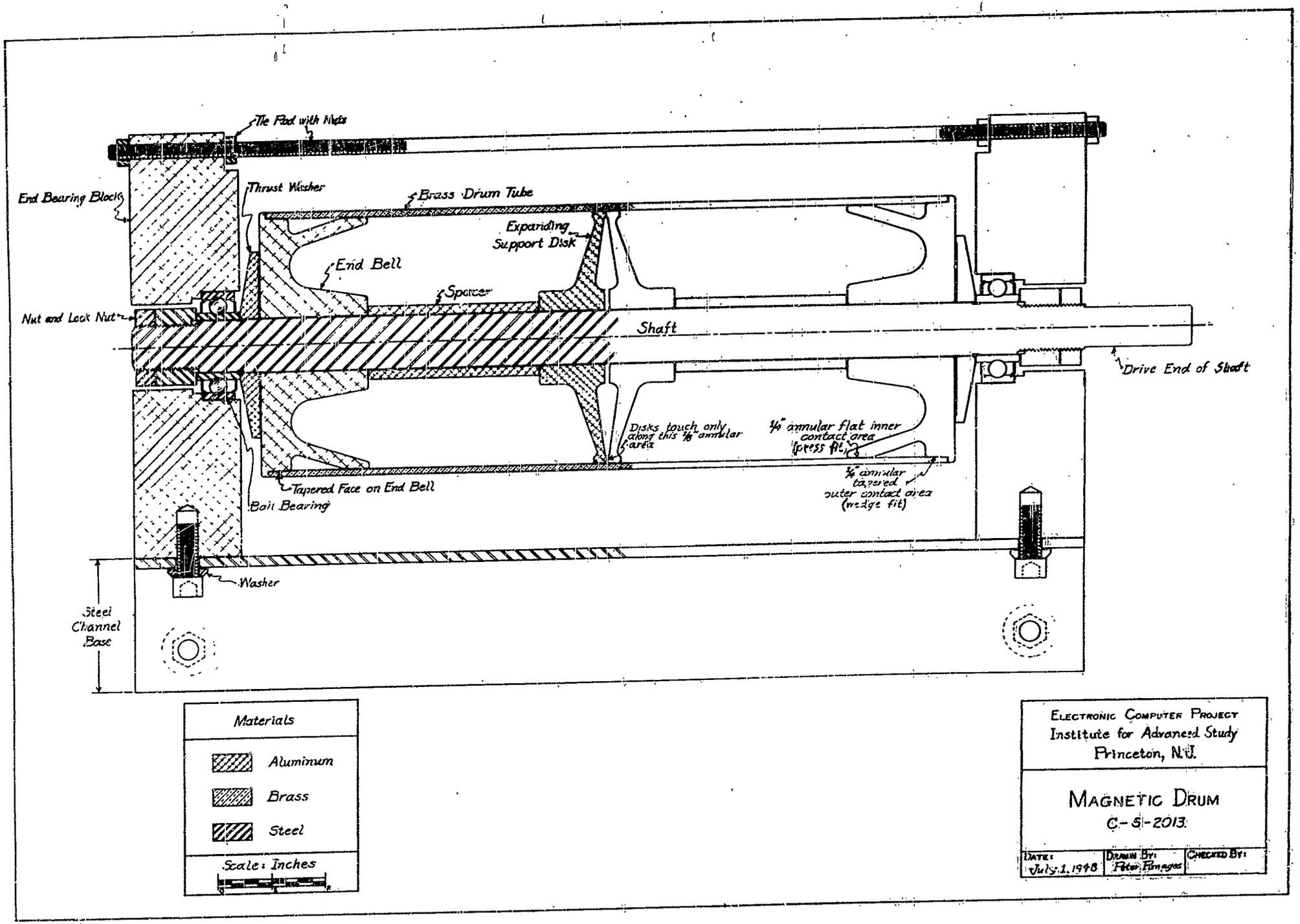
Tie Rod with Nuts
End Bearing Block
Thrust Washer
Brass Drum Tube
Expanding Support Disk
End Bell
Spacer
Nut and Lock Nut
Shaft
Drive End of Shaft
Disks touch only along this 1/16" annular area
1/8" annular flat inner contact area (press fit)
1/8" annular tapered outer contact area (wedge fit)
Tapered Face on End Bell
Ball Bearing
Washer
Steel Channel Base
Materials
Aluminum
Brass
Steel
Scale: Inches
Electronic Computer Project
Institute for Advanced Study
Princeton, N.J.
Magnetic Drum
C-5-2013
Date: July 1, 1948
Drawn By: Peter Flinagan
Checked By:

A study of Drawing C-5-2013 will reveal in detail the construction of the drum. The revolving drum consists of twelve parts. The drum itself is a piece of drawn brass tubing with an outside diameter of 5 inches, a wall thickness of 1/8 of an inch and a length of 12-5/8 inches. The drum is fastened to its shaft by means of a pair of aluminum end bells and two central aluminum expanding support disks. Aluminum spacers separate the end bells and expanding support disks. Nuts on the shaft ends exert a force on the inner races of the ball bearings. This force is transferred through large aluminum thrust washers to the end bells and also from the end bells through the aluminum spacers to the central expanding support disks.

The end bells have been turned from 2 inch aluminum plate. Each end bell contacts the drawn brass drum tube in two places as shown. The inner contact area is a 1/4 inch annular flat face on the end bell. There is a press fit between this face and the drum tube. The outer contact area is a tapered 1/4 inch annular face on the end bell. This end bell taper ends in a 1/8 inch shoulder. In assembly the end bells are pressed into the tube until the tube ends hit the tapers. Then the shaft nuts are turned and the bells are forced farther into the drum until the tube ends seat home on the 1/8 inch shoulders of the bells. Thus there is a wedge fit between the drum and the bells along the outer edges of the drum.

An examination of the central expanding support disks in Drawing C-5-2013 shows that their inner faces are concave or dish-shaped. These disks

contact each other only along a 1/8 inch annular ring along the outside diameter of the disks as shown. When these disks are pressed together slightly they are deformed. The pressure tends to flatten the concave faces of the disks and therefore the outside diameters of the disks increase. The disks are turned so that there is a light press fit between their outside diameters and the tube. When the end bells are put on and the shaft nuts tightened, the disks are pressed together by a force exerted on them by the spacers. As a result the outside diameters of the disks are increased and the press fit between the disks and the drum tube is increased. This system of supporting the center of the tube has the following advantages:

1. A tight press fit between the outside diameters of the disks and the tube is assured.

2. The disks can be inserted without danger of "cocking" on the shaft because of the very light initial press fit between them and the tube.

3. Light, low moment of inertia disks may be used.

4. Assembly and dis-assembly is made easier.

5. Without the expansion feature of these disks, it would be necessary to press a single large disk into the center of the tube from one end of the tube. The press fit would have to be considerable in order to be effective. This heavy press fit would result in the scoring and wearing of both disk and tube and a consequent decrease in the number of times the unit may be assembled and dis-assembled.

The expansion of the outside diameters of the disks must not be so

large as to over-stress the tube at the center. The expansion of the disks, which is determined by how much they are pressed together, is controlled by carefully determining the length of the aluminum spacers. If the spacers are made too long, the tube will be over-stressed at the support point. Spacers that are too short result in a press fit at the center that is too light to support the tube after it is revolving at its high design speed. ~~Figure B~~ Photograph 2-B shows the inner parts of the drum (end bells, expanding support disks, spacers, shaft, bearings, etc.) mounted in the lathe for final finishing operations.

The first drum (shown in Photograph 2-a was made of 5 inches outside diameter drawn brass tube. Tubes of 3 inches, 4 inches and 6 inches outside diameters have also been contemplated. These drums are to be rotated at very high speeds. Such speeds produce considerable tensile stresses in the drawn brass tubing as a result of the centrifugal forces caused by the rotation of the drum. Assuming that the elastic limit of the brass of which the tubing is made is 25,000 p.s.i. and that the wall thicknesses of the tubes are all 1/8 of an inch we obtain the following table which gives the speed of the tube in revolutions per minute necessary to cause a tensile stress in the tube equal to the elastic limit of the brass from which the tube is made:

Outside Diameter of Tube in Inches	R. P. M.
3"	39,000
4"	28,500

5"	22,500
6"	18,500

9.2 Design of the Multiple Head Unit

Photograph 2-a and Drawing C-5-2014 show the two end bearing blocks. It will be noted that an upper corner on each block (on the same side) is cut off at an angle of 45 degrees. This 45 degrees cut provides a face for mounting the multiple head unit as shown in Drawing C-5-2014. The multiple head is mounted at an angle of 45 degrees so that the gap between the head and the drum may be seen more easily by the observer. A lamp placed behind the multiple head unit can provide a background of light so that a gap of only one or two thousandths of an inch between the drum and head can be easily observed by the operator. The 45 degree angle also enables the operator to place himself in a convenient position while adjusting the gap between the drum and the head.

Drawing C-5-2014 shows one station of the 44 channel multiple head. A description of this one head will apply to all since all are alike. The head on which the fine, one mil wire is mounted is made of bakelite. The bakelite head is mounted on a rigid aluminum mounting bar for two reasons:

1. To reduce the vibration of the heads.
2. To provide a means of adjusting the gap between each head and the drum.

As can be seen in the drawing, the aluminum bar has a deep round bottomed

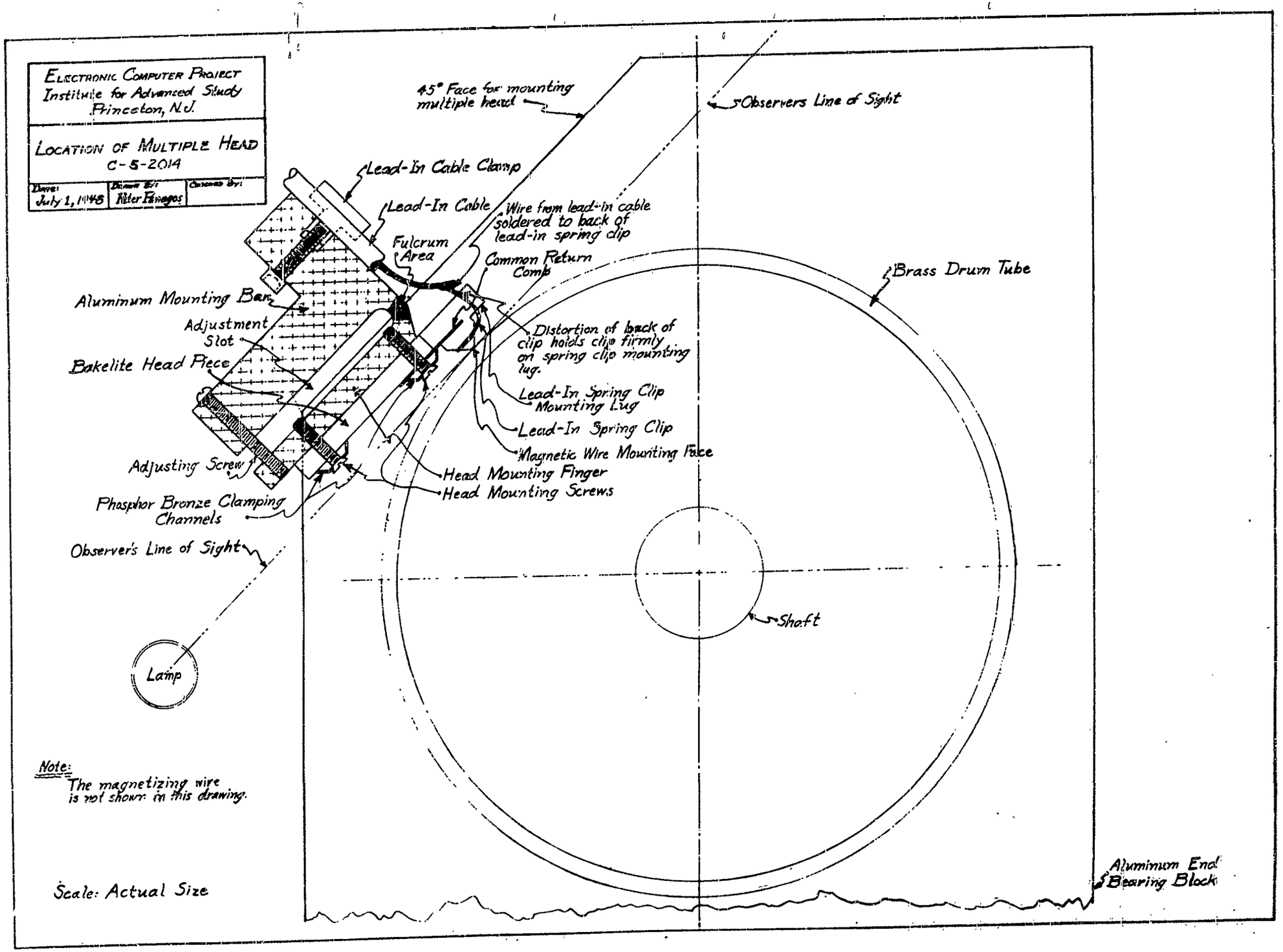
Electronic Computer Project
Institute for Advanced Study
Princeton, N.J.
Location of Multiple Head
C-5-2014
Date: July 1, 1948
Drawn By: Ritter Finnegos
Checked By:
45° Face for mounting multiple head
Observers Line of Sight
Lead-In Cable Clamp
Lead-In Cable
Wire from lead-in cable soldered to back of lead-in spring clip
Fulcrum Area
Common Return Comp
Brass Drum Tube
Aluminum Mounting Bar
Adjustment Slot
Bakelite Head Piece
Distortion of back of clip holds clip firmly on spring clip mounting lug.
Lead-In Spring Clip Mounting Lug
Lead-In Spring Clip
Magnetic Wire Mounting Face
Adjusting Screw
Head Mounting Finger
Head Mounting Screws
Phosphor Bronze Clamping Channels
Observer's Line of Sight
Shaft
Lamp
Aluminum End Bearing Block
Note:
The magnetizing wire is not shown in this drawing.
Scale: Actual Size

slot cut in it along its entire length. This slot leaves a finger of aluminum 3/16 of an inch thick that is fastened to the bar by only 1/8 of an inch of material remaining at the top. This thin upper section may be called the fulcrum area. Any force exerted at the lower end of the head mounting finger will cause it to move or pivot slightly about this fulcrum area. Therefore, this area acts to all intents and purposes as a small hinge. This force is supplied by the adjusting screw which taps into the lower end of the finger. The bakelite head is screwed to the finger by two screws as shown so that any motion imposed upon the head mounting finger is also forced upon the head. Thus, by tightening the adjusting screw, the finger is pulled in (partially closing the adjustment slot) and the head moves out towards the drum. Since the distance of the adjusting screw from the fulcrum area is several times the distance of the head point (on which the magnetizing wire is mounted) from this same area, it takes a motion of six of seven thousandths of an inch at the place at which the adjusting screw enters the finger to move the head point one thousandth of an inch. Thus, a vernier adjustment is provided for each head.

The length of the brass drum tube is 12-5/8 inches. With 1/8 of an inch of free space left on each end of the brass drum, the remaining 12-3/8 inches is divided into 44 channels. Each channel is 1/4 of an inch wide and the spacing between channels is 1/32 of an inch. The multiple head unit is built to match these specifications. Each head unit mounts

a fine, one mil magnetizing wire that is 1/4 of an inch long. The spacing between these wire segments is 1/32 of an inch.

Drawings C-5-~~2005~~ 2015 and C-5-2016 show a section of the multiple head strip. Drawing C-5-2015 presents three plane views of this section whereas Drawing C-5-2016 shows the section in isometric for greater clarity. These figures show clearly how the bar of metal, left after the adjustment slot is cut into the aluminum mounting bar, is sliced into separate head mounting fingers, each finger being 3/16 of an inch thick, 1/4 of an inch wide and spaced 1/32 of an inch away from its neighbors (the slicing having been accomplished with a 1/32 inch slotting saw on the milling machine).

It will be noticed that the heads of the screws that fasten the bakelite heads to the head mounting fingers do not bear directly on the bakelike, but rather on the phosphor bronze clamping channels. These clamping channels themselves bear directly on the bakelite heads and hold them against the fingers. Every untapped hole through which the head mounting screws pass is an oversize clearance hole. The reason for this is to allow a slight sliding action to take place between the bakelite head piece and its aluminum head mounting finger so that undue stresses may not be induced in the bakelite when the adjusting screw is tightened or loosened thereby distorting the finger slightly. It was the desire to obtain this slipping motion between head and finger that dictated the use of the phosphor bronze clamping channels mentioned above.

ELECTRONIC COMPUTER PROJECT Institute for Advanced Study Princeton, N.J.		
PLANE VIEWS OF A SECTION OF THE MULTIPLE HEAD STRIP C-5-2015		
DATE: July 1, 1948	DRAWN BY: Peter Panagos	CHECKED BY:

Scale: Actual Size

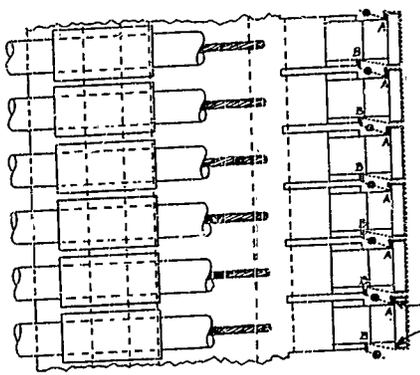

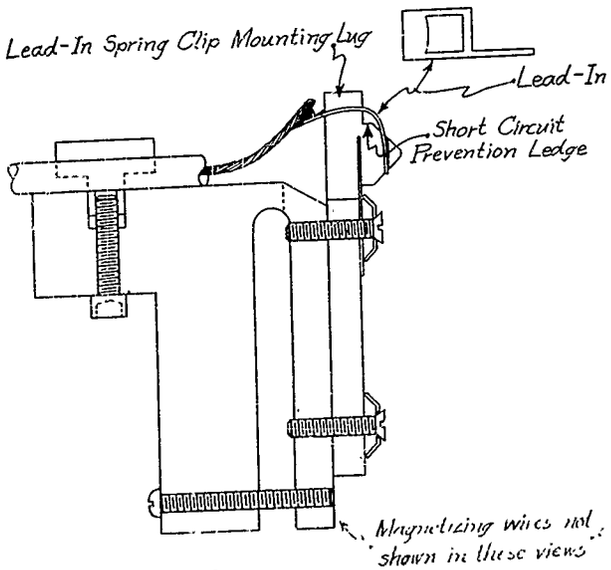

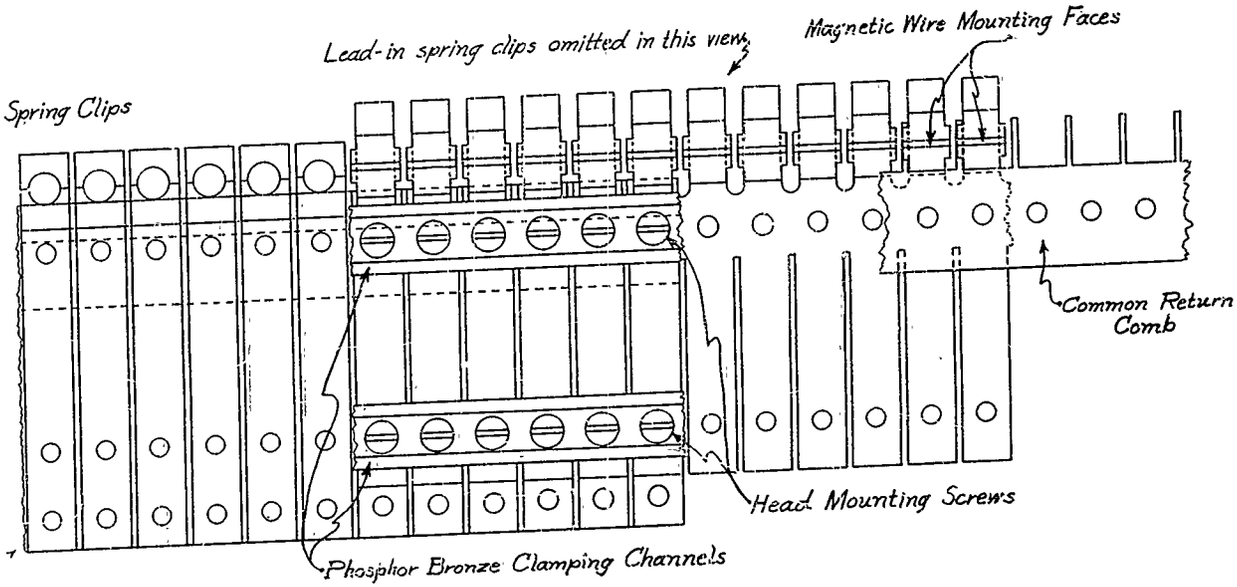

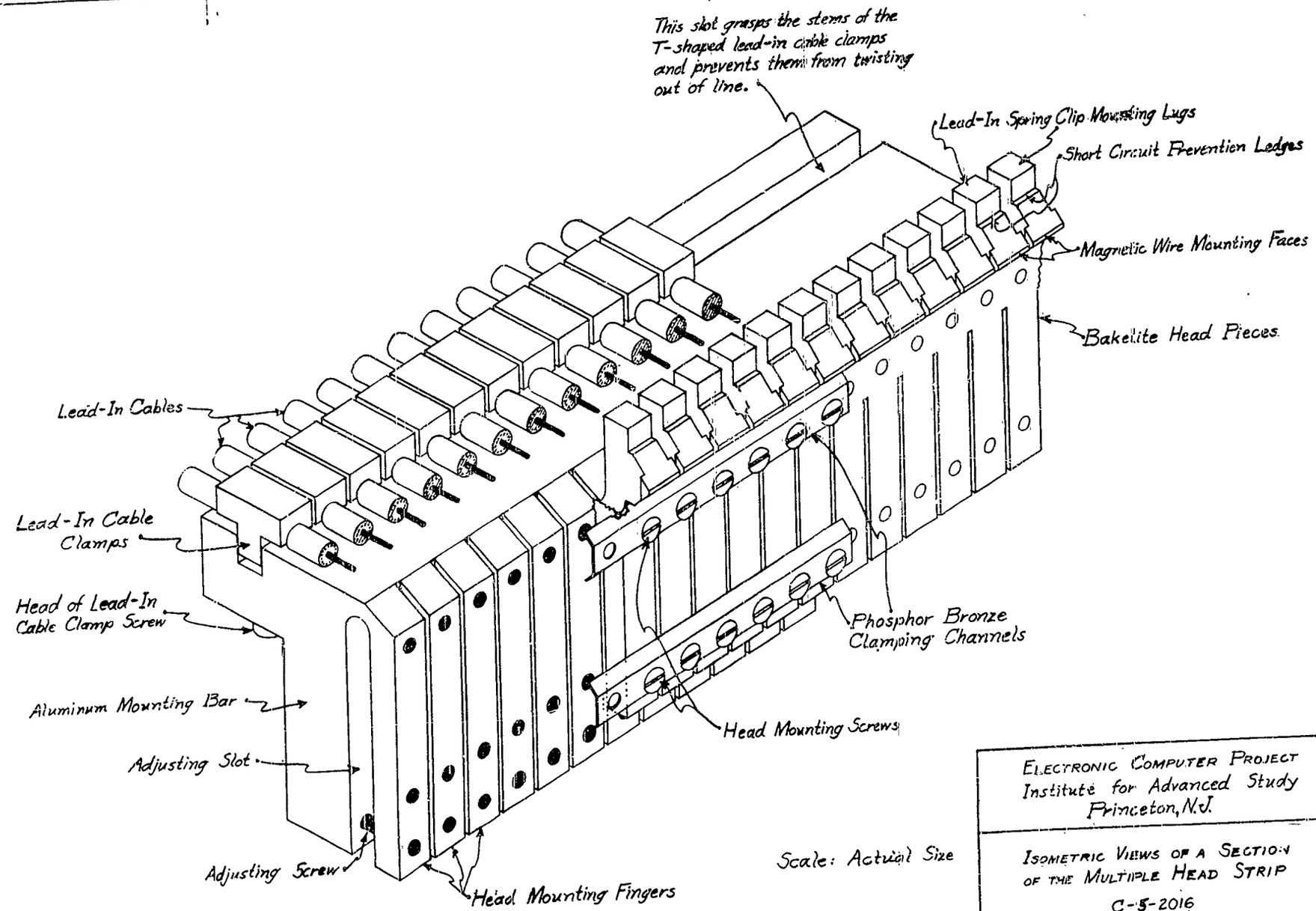

Scale: Actual Size

Electronic Computer Project Institute for Advanced Study Princeton, N.J.		
Isometric Views of a Section of the Multiple Head Strip C-5-2016		
Date: July 1, 1948	Drawn By: Peter Panagos	Checked By:

Note:
All lead-in spring clips and the common return comb have been omitted in this drawing. The magnetizing wires are also not shown.

So far nothing has been said ab out the wiring of the multiple head piece. With the aid of Drawings C-5-2015, C-5-2016, and C-5-2017 (especially the latter) this feature will be discussed here.

The magnetizing filament used will be very fine, namely, one mil copper wire. It is seen that the bakelite piece narrows down to a thin, flat area 1/4 of an inch long and 1/32 of an inch wide. This area is the magnetizing wire mounting face. Down the center of this face a groove will be cut. This groove will be 1/4 of an inch long, one mil wide and 1/2 mil deep. In this groove the one mil copper magnetizing wire will rest. One end of each magnetizing wire must be connected to its own shielded lead-in cable. The other end of each magnetizing wire must be connected to a common return wire. Since a force of only a couple of ounces is all that is necessary to break the one mil copper wire, direct connection between the lead-in cable and the magnetizing wire is impossible. A system of non-moving, relatively rigid contact terminals close to the magnetizing wire mounting faces had to be established. This problem has been met by use of the lead-in spring clips and the common return comb.

By referring to the drawings, it will be noticed that by various machining operations on the bakelite the following projections and ledges are established, each of which serves a specific function:

1. Lead-In Spring Clip Mounting Lug:

   This lug is a square projection left on the very top of each bakelite head piece. It is 3/16 of an inch square and extends 5/32 of an inch above the short circuit prevention ledge.

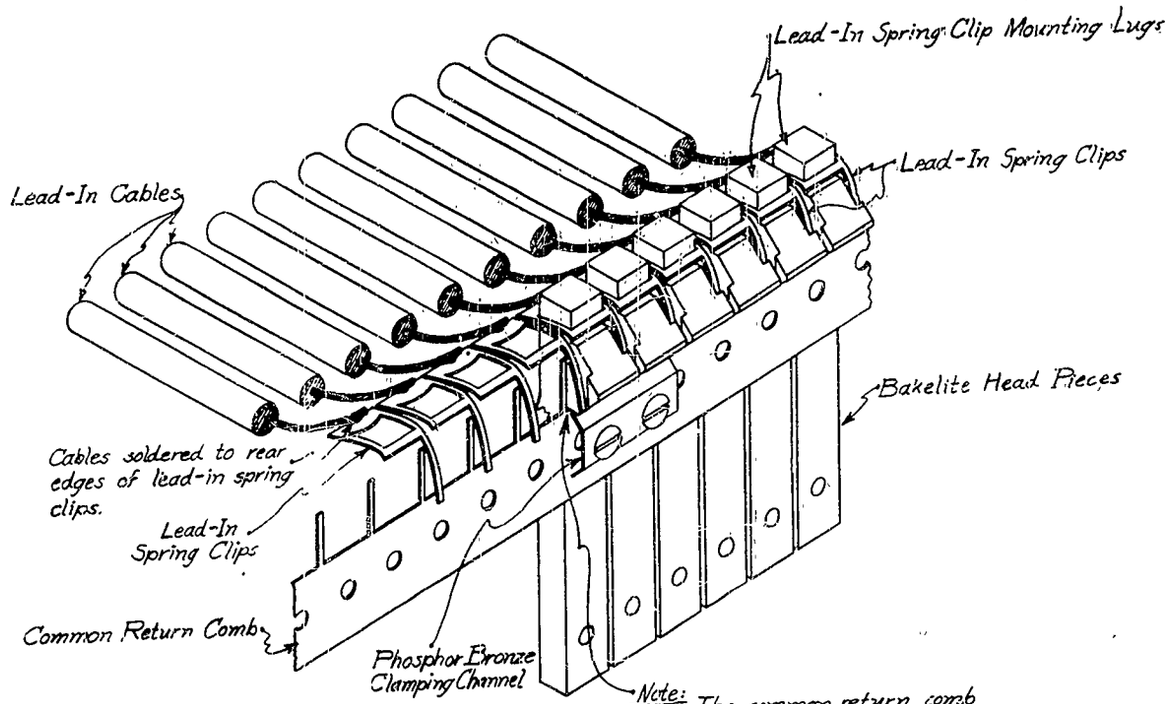

Note: The common return comb is clamped between the phosphor bronze clamping channel and the bakelite head pieces.

Scale: Actual Size

Electronic Computer Project Institute for Advanced Study Princeton, N.J.		
Multiple Head Strip Wiring System C-S-2017		
Date: July 1, 1948	Drawn By: Peter Panagos	Checked By:

2. Short Circuit Prevention Ledge:

3. Head Piece T-Ledge:

See figures C-5-2015 C-5-2016 C-5-2017 for the location of these parts. Their functions will be explained shortly.

Drawings C-5-2015 and C-5-2017 show the Lead-In Spring Clips. These clips are made of beryllium copper sheet stock. The hole in the spring clip is essentially a 3/16 of an inch square. It will be noted that the rear edge of the clip is much wider than the other edges. The side of the square hole facing this wide edge is slightly rounded so that the length of the "square" hole across the hole center and measured from the side of the hole facing the wide edge (i. e., measured from the top center of the round) is about 1/64 of an inch under 3/16 of an inch. This decrease in the hole size in this one direction means that these lead-in spring clips must be forced on to the lead-in spring clip mounting lugs. The resulting distortion of the round side of the square hole in the spring clip causes the clip to seize the mounting lug very tightly. This distortion is shown in Drawing C-5-2014. The lead-in spring clips contain a long, thin projection. This projection is the arm to which one end of the one mil magnetizing wire is soldered. When the lead-in spring clip is in place, this arm is bent and sprung into position behind one of the Head Piece T-Ledges as shown in Drawings C-5-2015 and C-5-2017. Thus, the arm of the lead-in spring clip

forms one of the two contact terminals needed by each magnetizing wire.

The common return comb is clearly illustrated in Drawings C-5-2015 and C-5-2017. This comb is made from a single strip of phosphor bronze sheet. It is fastened in place by being clamped between the phosphor bronze clamping channel and the bakelite head pieces as shown in Drawing C-5-2017. Oversize clearance holes permit free and easy passage for the head mounting screws. The "teeth" of the common return comb project up between the bakelite head pieces and behind the lead-in spring clip projecting arms. These comb teeth provide the terminal points for the other ends of the magnetizing wires. The purpose of the Short Circuit Prevention Ledge is to keep the lead-in spring clip from slipping down and touching a comb tooth.

The procedure for wiring the entire multiple head unit is:

1. Assemble all parts of the 44 channel multiple head strip. This includes the lead-in spring clips, the common return comb, the two clamping channels, etc. When this is done, each of the 44 bakelite heads is provided with two terminal points for the ends of the magnetizing wire; one is the projecting arm from its lead-in spring clip and the other is its tooth from the common return comb. Now the multiple head strip is ready for the next operation.

2. The next step is to lace the one mil copper wire around the spring clip projecting arms and the comb teeth terminal points as shown in Drawing C-5-2015 (the positions of these terminals are shown very clearly

in Drawing C-5-2017) Note that this lacing is done with one continuous piece of wire; short pieces are not used. As has been pointed out, a pull of only a couple of ounces is all that is needed to break this wire. Add to this low breaking force the fact that the wire is making many very sharp bends and it is seen that this lacing operation is quite delicate. All burrs must be removed from the spring clip projecting arms and the common return comb teeth before they can be used.

3. Once the one mil magnetizing wire has been laced into place, a small soldering iron is used to solder the magnetizing wire to the spring clip projecting arms and comb teeth terminals.

4. The final operation is to cut the magnetizing wire between each bakelite head as shown in ~~figure E~~ C-5-2015. When this cutting operation has been completed, the desired result stands accomplished. Each bakelite head has its own magnetizing wire fastened at one end to its lead in terminal and at the other end to its common return terminal. Since, under step 1 above, the shielded lead-in cables were soldered to the wide rear edges of the lead-in spring clips as shown in Drawings C-5-2015 and C-5-2017, the wiring of the multiple head strip is completed.

Notice that there is no danger of breaking the magnetizing wire since this wire is not directly soldered to the lead-in cable. Each lead-in cable is individually clamped to the aluminum mounting bar. This accomplishes two purposes:

1. It prevents the cable from pulling on the lead-in spring clamps and thus prevents any accidental breakage of the magnetizing wire.

2. It prevents a force being exerted on the bakelite head through the lead-in cable. Such a force is extremely undesirable since the magnetizing wire sits only one thousandth of an inch from the surface of the magnetic drum. Any slight pull would make the gap between the magnetizing wire and the drum ineffectively large, and any slight push would cause the magnetizing wire to strike the drum.

These clamps are illustrated in Drawings C-5-2015 and C-5-2016. Each clamp is made from a small T-shaped aluminum block with a hole the size of the cable drilled longitudinally through the head or top of the T. A screw passes through the aluminum mounting bar and taps into the stem of the T-shaped clamp block. When this screw is tightened, the cable is clamped between the top or head of the T-clamp block and the upper surface of the aluminum mounting bar.

As stated earlier, the aluminum mounting bar is fastened to the 45 degree faces of the end bearing blocks. At these fastening points an adjustment feature will later be included that will permit the ends of the aluminum bar to be moved both perpendicularly and parallel to the 45 degrees mounting faces on the end bearing blocks. This will assure the alignment of the magnetizing wire segments along an element of the drum cylinder and will also preserve the adjustment of each head by its individual adjustment screw exclusively as a final fine adjustment.

Note: The phosphor bronze clamping channels and common return comb are full length, i.e.they extend across the entire 44 stations without interruption.

9.3 Drum Coating Techniques

There are several conceivable methods available for coating the drum with a magnetic material. Four of these methods will be discussed here and may be designated.

1. Single Sheet Process
2. Coiled Strip Transfer Process
3. Spraying Process
4. Electroplating Process.

1. Shingle Sheet Process:

By this method, a large sheet of paper or plastic, coated with the magnetic material is wrapped around, and glued to, the drum (coated side up). The paper is not allowed to overlap; rather, after encircling the drum a butt joint is arranged. It is permissible to leave a small, uniform gap (between the ends of the sheet) longitudinally along the drum. It is important that this gap be parallel to the axis of the drum so that as little space as possible on the surface of the drum will be wasted.

2. Coiled Strip Transfer Process:

The material used in this process comes in a long strip or

ribbon consisting of a sturdy backing strip coated with the magnetic substance. This strip is wound spirally around and around the drum in a manner similar to the taping of the handle of a tennis raquet. This winding is done with the magnetically coated side of the strip down against the surface of the drum. Each turn slightly overlaps the preceding turn so that the entire drum is covered with the magnetic material. The drum is now placed in an oven and baked. Upon completion of the baking process, the drum is removed from the oven and the coil backing is stripped off. Of course, in the process of peeling off the backing, patches of magnetic material are pulled off the surface of the drum. Also the drum is imperfectly coated along the spiral joint of the coiled coated material. These bare spots on the surface of the drum are touched up by hand with a brush using the same magnetic material suspended in a suitable thinner.

3. Spraying Process:

The first operation in this process is to spray the drum with a base coat of a suitable cement. Next, the drum is sprayed with one or more coats of the magnetic material suspended in a suitable thinner. This thinner has the property of softening or dissolving the base coat of cement on the drum slightly so that there will be a good bond between the magnetic material and the drum. To secure a uniform coating, the drum is rotated while being sprayed. During the spraying

operation, the spray gun may either be held in the hand of the operator or mounted in the lead screw of a lathe in which the drum is mounted and revolving. If a heavy enough coating of magnetic material has been accumulated, irregularities in the thickness of the layer may be minimized by careful butting or grinding.

4. Electroplating Process:

In this process a thin layer of material, primarily nickel but alternatively nickel alloyed with cobalt, may be electroplated directly upon the surface of the drum. Suitable thickness of the layer are considered to lie in the range between one and five ten thousandths of an inch; the optimum value being dependent upon performance of the recording head and is not precisely known at present. However, the thickness parameter is not extremely crucial in the range of performance required in the specifications of drum performance which constitute the immediate design goal. Three identical drum cylinders have been made which can be interchanged in the same structural unit described; two of these will be electroplated by Brush Development Co. Cleveland O. with a material similar to that which has been used on their B#913-942 plated recording wire; (a product found quite satisfactory for our high speed wire drive.) The other drum will be coated by one of the other ferro-magnetic oxide processes in our own laboratory.

X. Limitations of the Technique and Estimates of Ultimate Performance.

The magnetic drum memory unit described in this report and now in process of construction is of modest pretension, and it may be of interest to consider briefly the question of ultimate performance attainable by these techniques. Any such estimate must clearly be very approximate, and depends heavily upon the assumption that certain technical capabilities specified in the present unit remain essential, and that figures of merit of the principal media of construction remain unchanged.

In particular, if the ability to "write in" either 1 or 0 at any desired digit position by merely superposing the new information upon the old (without erasing) remains essential, then it seems that the necessity to saturate the medium at each writing operation will be preserved in future models. From this fact, together with the assumption that no startling improvements in magnetic media will occur, it is possible to discuss the implications of increased operating rates.

Considering a single channel from the electrical terminals of the "read-write" head, it is clear that as the rate of operation is increased, both the back e.m.f. during recording and the peak e.m.f. generated during read-out will increase roughly in proportion, provided the velocity of the moving medium is correspondingly elevated. The ratio of voltage needed to write a digit to that generated in reading (in the current model 10^4 or 10^3 to 1) can be improved only by better coupling between head and medium; setting this possibility temporarily aside, it would appear that if the "per channel" reading and writing rate were increased from the present value of 10^5 per second to 10^6 per second, a writing "pulse" rising to the vicinity of 150 volts in

about .1 microsecond would be required. This value of voltage rise -- about 1500 volts per microsecond -- is close to the limit achieveable by "hand tube" blocking oscillator techniques, and sets a natural boundary independent of scale-factor (current rating) of the pulser.

The limit imposed by 150 volt writing pulses will also mediate from the standpoint of insulation breakdown; this point will be developed presently.

Apparently the only way of avoiding the difficulty of high recording voltages is to improve the coupling between the magnetic medium and the recording head, so that a greater proportion of the flux produced by the recording current is useful polarization of the magnetic medium. Means of accomplishing this have been considered (in the course of evolving the unit now under construction) and two approaches merit mention. The first approach is to use not a single straight wire as conductor, but rather some planar curve or angular arrangement; for example, a right-angle or loop coplanar with the element of magnetizeable surface. By such means the flux density per unit magnetizing current could perhaps be doubled. A second approach is to fabricate the magnetizeable surface of the drum so as to provide grooves into which the magnetizing wire (either straight or bent) is projected by suitable support. If such grooves were several times deeper than their width, an improvement in coupling of perhaps as much as five might be possible.

No experimental assessment of these arrangements has been carried out to date of this report, the estimates being based solely on calculations.

As higher operating rates are sought, higher peripheral speeds of the drum will become necessary, and this will introduce new categories of difficulties: a) drive motor; b) bearings; c) centrifugal stresses; d) aerodynamic effects. Taking these in order, the drive motor offers no severe problems for speeds up to perhaps 20,000 to 25,000 R.P.M., but if greater speeds such as 36,000 R.P.M. are desired it is almost certain that commercial types will have to be abandoned in favor of custon-built types. As far as bearings are concerned, the picture is much the same; by mounting commercial types in cascade on concentric sleeves so as to subdivide the angular motion, speeds up to 20,000 or 25,000 R.P.M. could safely be handled, but beyond this such an arrangement would become awkward, and it would probably be necessary to resort to special designs. Regarding centrifugal stresses, the present 5 1/2" drum fabricated from brass would certainly be safe up to speeds of 14,000 R.P.M. and a similar model made of 24-ST duraluminum would certainly withstand 36,000 R.P.M. provided the magnetic coating possessed sufficient adherence.

However, at speeds in the vicinity of 36,000 R.P.M. one of the gravest obstacles would probably prove to be aerodynamic effects -- both drag losses due to aerodynamic friction, which would greatly increase the necessary driving power, and also vibration effects resulting from turbulence. These disturbances might well introduce a noise level of serious proportions at supersonic frequencies. If thesattempt were to be made to achieve rotational speeds in the vicinity of 36,000 R.P.M. in a magnetic drum memory system, it would appear desireable to follow the example of certain aircraft gyro instruments, by enclosing the entire drum assembly in a partly evacuated housing, using a jet of incoming

air operating against a small turbine to turn the rotor, and a vacuum pump system as prime mover. With such an arrangement rotational rates of 36,000 R.P.M. should prove easily feasible, and for a drum of about 3" diameter this would allow roughly the same pulse spacing (.01") as now used. However, the use of partial vacuum about this rotor introduces a new problem, since the breakdown voltage between various electrical conductors is seriously reduced -- so that the writing pulse voltage may again become the limitation.

To sum up, all of the critical factors appear to approach natural bounds of practicality in the vicinity of 10^6 pulses per second per channel, and at rotational speeds between 30,000 and 40,000 R.P.M. The number of digits around each magnetic tract seem also bounded somewhere between 2000 and 5000. Also with pulses of roughly half microsecond duration, the techniques of "gating" and "counting" are not far from upper limits of safe performance.

Accordingly, the limits of the magnetic drum memory technique may be represented by a single channel of capacity 5000 digits, scan rate 10^6 digits per second, and mean access time about 10^{-4} second. The number of electronic tubes per channel would probably lie between 3 and 6. If more than one read-write head be used, the rotational speed or the access time could be proportionately reduced.

A typical example of the ultimate design using these techniques might well be a unit such as the following: a drum of seven inch diameter, duralumimum 24-ST, running 24,000 R.P.M. on cascaded concentric bearings, having four read-write heads per channel and 45 channels, in an evacuated housing and driven by air jet. This might have a total capacity of 2,500 words of 40 binary digits each, with mean access time of 10^{-4} second.

Number of heads required: 180; tubes: about 500; power: 5 KW; physical dimensions of the magnetic unit alone: 1 ft. x 2 ft. x 2 ft.

Finally, it may be worthwhile to comment that when used strictly as a memory organ in conjunction with a separate arithmetic unit, the hypothetical magnetic drum unit described above is grossly inefficient in at least one sense. That is, the unit is capable of accomplishing 4.5×10^7 useful gating and storing operations per second, but in such service would in fact be called upon to execute only something like one tenth of one per cent of this number during actual read-in and read-out operations.

APPENDIX

A.1 On the extrapolated length of the recorded dipole.

It is of interest to determine, from the voltage pattern produced in the single-wire head, the character of the magnetic dipole on the tape. In particular, it is worthwhile to find the ratio of the extrapolated length to the actual length of the dipole, as this will give an indication of the amount of interference between neighboring dipoles we would expect.

The dipoles we record are clearly short (of the order of 0.01" long) and broad (0.25" wide). Let us neglect the effect of the fixed width so that our analysis is two-dimensional. The poles of the dipole are clearly spread, but let us begin by considering the field produced by a single line pole of infinite length. The field produced by such a pole may be considered cylindrically symmetrical, so that if the strength of the pole is s per unit length the flux per unit length is $4\pi s$, the area per unit length at radius r is $2\pi r$, and hence the flux per unit area is $\frac{2s}{\pi}$. This gives a field strength in air of $\underline{H} = \frac{2s}{r^2}\,\underline{r}$. Consider now a dipole with poles at $x = \pm \ell$, $y = 0$. The y-component of field at a point P(x, y) is then

$$H_y = \frac{2sy}{(\ell-x)^2 + y^2} - \frac{2sy}{(\ell+x)^2 + y^2}$$

Since the wire of the head is moving in a plane parallel to the plane of the dipole its y-coordinate is fixed and its x position is changing at constant speed. The e.m.f. induced in the head is then proportional to H_y, and if we are interested only in the shape of the voltage curve we may write

$$\left[e = k \quad \frac{y}{(1-x)^2 + y^2} - \frac{y}{(\ell+x)^2 + y^2} \right]$$

Using this formula (i.e., assuming each pole to be a line pole) let us see to what extent we can approximate the shape of an experimentally determined voltage pattern. The pattern for a single-wire head spaced 2 mils from the magnetic medium is shown in Drawing C-5-2021 along with the corresponding computed pattern. This pattern was computed as follows. Measuring the value of y to the center of the wire we have y = 2.5 mils and hence

$$e = k \left[\frac{2.5}{(7-x)^2 + 6.25} - \frac{2.5}{(7+x)^2 + 6.25} \right]$$

The value of x for which e is a maximum (minimum) on the experimental curve is $x = \pm 1.8$ mils. Setting the derivative of the above expression to zero at $x = + 1.8$ we obtain $z = 1.25$ mils. The voltage pattern can then be computed. Note that the overall length of the dipole is 2.5 mils, or less than 1/4 of the extrapolated length of 10.4 mils. This shows that if we space dipoles according to the extrapolated width (see Section 3.1) there is a considerable separation of the poles of adjacent dipoles and hence little interference between them. This is consistent with the fact that our studies of dynamic recording showed that pulses could be safely spaced according to the extrapolated length. It should be noted in this connection that a dynamically recorded dipole is longer than the corresponding statically recorded one because of the motion of the head during the recording. However, the record pulses used in the investigation had a duration of only 0.2 microsecond which corresponds to a motion of only 0.2 mils at a peripheral velocity of 1000 inches per second.

It will be noted in Drawing C-5-2021 that the calculated pattern is broader than the measured one. This may seem surprising since the calculations were based on a line-dipole, whereas we would expect some spreading (especially at the surface -- where we have assumed the dipole to be),

and this spreading would cause a broadening of the pattern. Actually a broadening of the dipole reflects itself very slowly in the voltage pattern, so much so that expected deviations from a line dipole would produce effects below the experimental error of the measurements. This can be seen by comparing the field produced by a line dipole of uniform strength spread over an area. Let the dipole have a width of $2\Delta\chi$, its center being χ distance from the origin. Then, for a given total strength of dipole we have

$$e = k \frac{\int_{\chi-\Delta\chi}^{\chi+\Delta\chi} \left[\frac{y}{(\chi-x)^2+y^2} - \frac{y}{(\chi+x)^2+y^2}\right] d\chi}{\int_{\chi-\Delta\chi}^{\chi+\Delta\chi} d\chi}$$

and hence

$$e = \frac{k}{2\Delta\chi} \left[\left\{\tan^{-1}\left(\frac{\chi+\Delta\chi-x}{y}\right) - \tan^{-1}\left(\frac{\chi-\Delta\chi-x}{y}\right)\right\} + \left\{\tan^{-1}\left(\frac{\chi+\Delta\chi+x}{y}\right) - \tan^{-1}\left(\frac{\chi-\Delta\chi+x}{y}\right)\right\}\right]$$

To find the effect of a small $\Delta\chi$ on e we expand the first two terms in a series about the point $\chi-x$ and the second two terms in a series about the point $\chi+x$. To a first approximation, then

$$e = k \left[\left\{\frac{y}{(\chi-x)^2+y^2} - \frac{y}{(\chi+x)^2+y^2}\right\} + \frac{(\Delta\chi)^2}{3y^3}\left\{\frac{3z^2-1}{(1+z^2)^3} - \frac{3w^2-1}{(1+w^2)^3}\right\}\right]$$

where $z = \frac{\chi-x}{y}$ and $w = \frac{\chi+x}{y}$. The first term of the right-hand side is the same as the expression obtained under the assumption that the pole is a line pole (has no breadth), so the second term shows us the effect of broadening the pole. It shows that for $\Delta\chi = 1/4$ the error produced in e of Figure 3 is only about 1/5% at x = 1.8 and 1% at x = 1.5.

Reproduced by

CADO

CENTRAL AIR DOCUMENTS OFFICE

WRIGHT-PATTERSON AIR FORCE BASE-DAYTON, OHIO

REEL-C 3170A

A.T.I 67141

The U.S. GOVERNMENT

IS ABSOLVED

FROM ANY LITIGATION WHICH MAY ENSUE FROM AN INFRINGEMENT ON DOMESTIC OR FOREIGN PATENT RIGHT WHICH MAY BE INVOLVED.

UNCLASSIFIED