Reproduced by

DOCUMENT SERVICE CENTER

ARMED SERVICES TECHNICAL INFORMATION AGENCY

U. B. BUILDING, DAYTON, 2, OHIO

REEL-C 71741

A.T.I 202186

"NOTICE: When Government or other drawings, specifications or other data are used for any purpose other than in connection with a definitely related Government procurement operation, the U.S. Government thereby incurs no responsibility, nor any obligation whatsoever; and the fact that the Government may have formulated, furnished, or in any way supplied the said drawings, specifications or other data is not to be regarded by implication or otherwise as in any manner licensing the holder or any other person or corporation, or conveying any rights or permission to manufacture, use or sell any patented invention that may in any way be related thereto."

UNCLASSIFIED

STI
ATI No. 202796
ASTIA FILE COPY

A THEORETICAL INVESTIGATION OF THE POINT SOURCE-SINK ENVELOPE IN THREE DIMENSIONS.

U. S. Experimental Model Basin,
Navy Yard, Washington, D. C.

1930.

Report No. 271.

A THEORETICAL INVESTIGATION OF THE POINT SOURCE-SINK ENVELOPE IN THREE DIMENSIONS.

Summary.

An arbitrary streamline form represented by a solid of revolution was chosen. The approximate theoretical source-sink combination was determined from the solution of thirteen linear equations. The velocity pressures due to this source sink combination were computed. The resulting pressure distribution curve is of the form expected by experiment except near the bow and stern where the undue influence of the nearby points makes the values unreliable. It is evident, therefore, that the method and equations are correct but for precise work a larger number of sources and sinks should be determined. Undoubtedly the method of line sources and sinks used by von Karman gives the more reliable results for the same number of equations.

- - - - - - - - - - - - - -

In 1912, G. Fuhrmann (reference 1) undertook the theoretical study of flow about a balloon model in three dimensions. He chose certain source-sink combinations that would give a separation surface in a uniform stream similar in shape to a Zeppelin. From these sources and sinks he then determined the resulting streamline form and computed the pressure distribution. A solid of revolution, coinciding with this streamline form was then constructed and the experimental pressure distribution curves compared very favorably with the theoretically derived values.

In 1927, von Karman (reference 2) undertook the inverse problem. He assumed the separation surface of a Zeppelin as an arbitrary streamline form, and computed the strength and distribution of the line sources and sinks required to produce this form in a uniform flow. He divided the Zeppelin into two parts which he called "half bodies" and treated each half separately. Thus neither half formed a closed curve. He first found the sources necessary to produce the forward half of the ship in a uniform flow, and next found the sinks required to produce the after half in the same uniform stream. He then joined the two halves together with certain simplifying assumptions and thus obtained a fairly simple determination of a source-sink distribution that would approximate the required form.

In 1929, Dr. R. H. Smith made an investigation of the source-sink envelope approximating the U.S. Navy No. 2 Strut (reference 3). He used thirteen points to determine the streamline form and set up the flux equations for thirteen postulated sources and sinks that would give the required separation surface in a uniform flow. Since the strut had a plane of symmetry parallel to its length the problem was reduced to one of two dimensions by assuming line sources and sinks running parallel to its length. A solution of the equations gave the necessary strengths of the specified sources and sinks. From these strengths, the resulting velocities and velocity pressures were computed and they compared very favorably with the experimental values obtained from the same streamline form.

At Dr. Smith's suggestion, I undertook the same type of treatment in three dimensions. It was desired to determine the source-sink combination required to produce an arbitrary "whole body" in a uniform flow, if a from assumptions as to the relative location of the sources and sinks and to the effects of joining the two halves.

An arbitrary streamline form representing a solid of revolution was chosen, (figure 1).

The coordinates are as follows:

P	X	Y	P	X	Y
0	0	0	8	17.696	7.318
1	.737	2.002	9	22.120	6.636
2	1.475	3.494	10	26.544	5.634
3	2.949	5.376	11	30.967	4.196
4	4.424	6.408	12	33.179	3.118
5	5.889	7.022	13	34.654	1.824
6	8.848	7.558	14	35.390	0
7	13.272	7.680			

The outward flow velocity due to a source of strength Q at a radical distance r is, (reference (4)

$$V = \frac{Q}{4\pi r^2} \qquad (1)$$

The flux or flow thru a given area is by definition the surface integral of the velocity vector over that area or flux $= \int V \cos(V, n)\, da$

(2)

The flow from a simple source thru a circle passing thru a point P lying to the right of the source is, (reference 4), writing $r = \sqrt{x^2 + y^2}$

and substituting in (2)

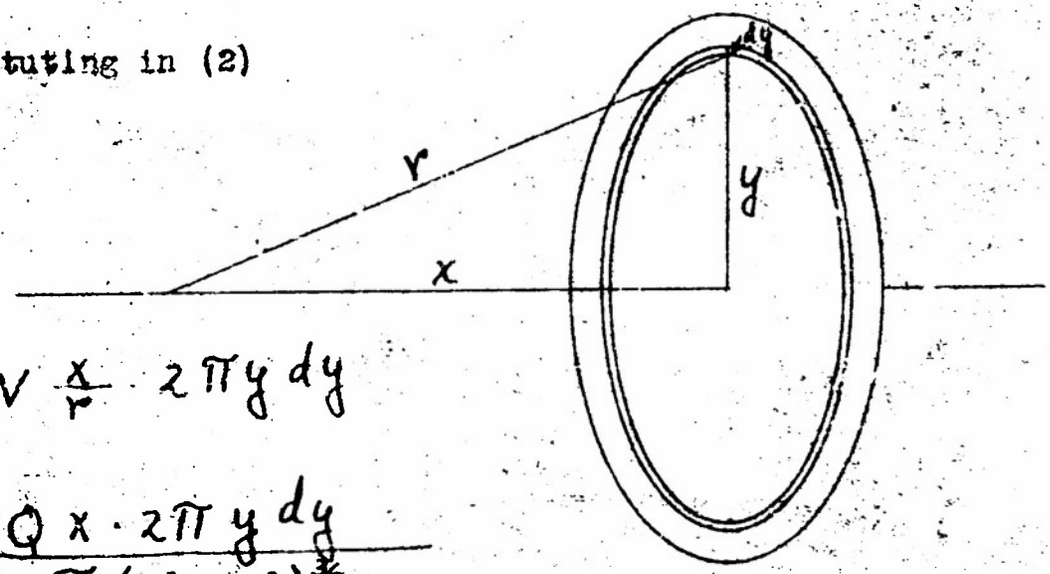

$$F_1 = \int_0^y V \frac{x}{r} \cdot 2\pi y \, dy$$

$$= \int_0^y \frac{Q x \cdot 2\pi y \, dy}{4\pi (x^2 + y^2)^{3/2}}$$

$$= \frac{Q}{2}\left(1 - \frac{x}{r}\right) \qquad (3)$$

The flux due to a parallel stream of strength U_0 flowing from left to right thru the same circle is from (2)

$$F_2 = U_0 \pi y^2 \qquad (4)$$

The total flux is, therefore,

$$F = F_1 + F_2 = \frac{Q}{2}\left(1 - \frac{x}{r}\right) + U_0 \pi y^2 \qquad (5)$$

The general equation of a streamline is

F = constant or

$$\frac{Q}{2}\left(1 - \frac{x}{r}\right) + U_0 \pi y^2 = F_{const} = C \qquad (6)$$

The general equation of the envelope is

$$\frac{Q}{2}\left(1 - \frac{x}{r}\right) + U_0 \pi y^2 = F_{const} = Q \qquad (7)$$

The flux is defined by Stokes as equal to $2\pi\psi$ where ψ is the stream function. Eq., (7) then becomes for the envelope,

$$\psi = \frac{U_o y^2}{2} - \frac{Q}{4\pi}(1 + \cos\theta) = 0 \qquad (8)$$

The total stream function at the point P due to the contributions of many sources and sinks on the X-axis, and the uniform stream U_o flowing from left to right in the positive direction of X is,

$$\psi_P = \frac{U_o y^2}{2} - \frac{1}{4\pi}\sum Q_K (1 + \cos\theta_{KP}) = 0 \qquad (9)$$

A simple substitution shows that equation (9) satisfies La Place's equation $\nabla^2\psi = 0$ in cylindrical coordinates, viz:

$$\nabla^2\psi = \frac{\partial^2\psi}{\partial y^2} - \frac{1}{y}\frac{\partial\psi}{\partial y} + \frac{\partial^2\psi}{\partial x^2} = 0$$

(10)

The condition of closure, i.e. the condition that liquid shall not be created or destroyed within the streamline form gives,

$$\sum Q_K = 0 \qquad (11)$$

Equation (9) becomes

$$\sum Q_K (1 + \cos \theta_{Kp}) = 2\pi U_0 y^2$$

or expressing the summation in terms of the individual sources and sinks, where a source and a corresponding point on the surface have the same X coordinate, (see fig. 1), we have

$$Q_1(1+\cos\theta_{11}) + Q_2(1+\cos\theta_{21}) + \cdots + Q_n(1+\cos\theta_{n1}) = 2\pi U_0 y_1^2$$

for the point P_1, and similarly

$$Q_1(1+\cos\theta_{12}) + Q_2(1+\cos\theta_{22}) + \cdots + Q_n(1+\cos\theta_{n2}) = 2\pi U_0 y_2^2$$

$$\vdots \qquad \vdots \qquad \vdots \qquad \vdots \qquad (9')$$

$$Q_1(1+\cos\theta_{1n}) + Q_2(1+\cos\theta_{2n}) + \cdots + Q_n(1+\cos\theta_{nn}) = 2\pi U_0 y_n^2$$

and from equation (11),

$$Q_1 + Q_2 + Q_3 + \cdots + Q_n = 0 \qquad (11')$$

The constants of the linear system of equations obtained when the coordinates of the given streamline form are substituted in the above equations are shown, reduced from seven to four decimal places, in Table 1. For convenience, U_0 is taken equal to unity. Thirteen points are chosen to determine the streamline form. The first twelve points give twelve equations of the

type (9') with thirteen unknown Q's. The thirteenth point locates the position of the thirteenth source or sink. The required thirteenth equation is ven by equation (11'). For accuracy, all constants were carried to seven decimal places thruout.

Setting up the equations is long and tedious, but they can be accurately checked. Since in computing the velocities it is necessary to find the radius vectors r_{KP} from the Kth source to the Pth point and also the sin θ_{KP} and the cos θ_{KP} the following procedure was used. First tan θ_{KP} was found from $\frac{y_P}{x_P - x_K}$ Then $r_{KP} = \sqrt{(x_P - x_K)^2 + y_P^2}$

$\cos \theta_{KP} = \frac{x_P - x_K}{r_{KP}}$, and $\sin \theta_{KP} = \frac{y_P}{r_{KP}}$

and finally $\frac{\sin \theta_{KP}}{\cos \theta_{KP}} = \tan \theta_{KP}$ as a check. Since accuracy is imperative, this check is necessary.

In solving the equations, every precaution possible must be taken against making errors, as a single mistake of any kind is fatal. It was found advisable to carry thru two complete sets of equations, using one as a check against the other. The only additional time required is that of actually recopying the equations and it is well spent. These precautions are necessary since there is no check on the accuracy of

the work until the final substitution of values into the original equations some weeks later.

The solution of the equations represented in Table I give the following values of Q:

Q_1 = -112.2466	Q_8 = -343.4136
Q_2 = 292.6761	Q_9 = 258.6047
Q_3 = -543.7600	Q_{10} = -366.0412
Q_4 = 723.4240	Q_{11} = 474.4820
Q_5 = 137.7586	Q_{12} - -758.9619
Q_6 = -406.8337	Q_{13} = 368.8703
Q_7 = 275.4388	Sum = - .0025

These values check accurately to five places and are less than three points off in the sixth significant figure. Figure 2 represents graphically the distribution and the relative strengths of the sources and sinks. By definition a positive Q is a source and a negative one a sink. We have then a distribution of seven sources and six sinks. It is rather surprising and not in accordance with accepted theory to find a sink at the nose and a source at the tail of the streamline form. However, it is to be noticed that a large source immediately follows the sink at the bow and a large sink immediately precedes the source at the stern. It seems reasonable to believe that because of the bluntness of the nose of the ship a sink

is necessary to bend the streamlines into the required boundary form.

The velocity components at any point P, due to a given stream function are, from elementary theory, (references 4 & 5).

$$u = \text{velocity in X direction} = \frac{1}{y}\frac{\partial \psi}{\partial y} \tag{12}$$

$$v = \text{velocity in Y direction} = -\frac{1}{y}\frac{\partial \psi}{\partial x} \tag{13}$$

and hence from equation (9)

$$u_P = U_o + \frac{1}{4\pi}\sum \frac{Q_K \cos \theta_{KP}}{r^2_{KP}} \tag{14}$$

$$v_P = \frac{1}{4\pi}\sum \frac{Q_K \sin \theta_{KP}}{r^2_{KP}} \tag{15}$$

the resultant velocity is

$$q_P = \sqrt{u_P^2 + v_P^2} \tag{16}$$

and the resultant pressure at P is (reference 3)

$$P_P = P_o\left(1 - \frac{q_P^2}{U_o^2}\right) \tag{17}$$

where P_o is the dynamic pressure $\frac{1}{2}\rho U_o^2$ of the parallel stream when brought to rest, and P_p is in terms of P_o as a unit.

It can be seen from equations (14) and (15), that the velocity components depend upon the inverse square of the radius vector instead of the first power as for two dimensions. This means that one source nearby will have much more influence upon the velocity at a point than many such sources at a considerable distance. Consequently, we must have more sources and sinks to obtain an accurate pressure distribution curve than in the corresponding problem in two dimensions.

Table II gives the values U_p, q_p, and p_p for the points chosen on the arbitrary streamline form.

The values of the point pressures P_p are shown plotted along the axis of the solid of revolution in Figure 3. Beginning with the point 3 and extending to the point 9 or 10, the curve is fairly smooth and of a contour which fits well with experience. However, at points 1 and 12 the pressures are far from correct; the latter being -4.4 when it should be a positive quantity. As pointed out before, this result is because of the undue influence of the sources and sinks which are very close to these points. This is made even more emphatic for the point (0,0). Here the theoretical pressure should be + 1 due to the stream U_o alone, yet when computed by formulae (14, 15, and 17), $P_{oo} = -76.5$.

Table 3 has been arranged to show the influence of

the various sources and sinks upon the velocity components at each point on the separation surface.

It seems, therefore, that to obtain a reliable pressure distribution curve by the above method over a three dimensional streamline form, one must postulate a large number of point sources and sinks. The amount of labor involved in the solution of linear equations increases about as the square of the number of equations and soon becomes prohibitive. Probably a better plan is to use distributed sources and sinks as employed by von Karman, (reference 2).

He assumed line sources and sinks of equal length distributed along the axis of revolution of the solid streamline form. The velocity components become

$$U_p = \frac{Q}{4\pi a y}\left(\sin\theta'' - \sin\theta'\right)$$

$$V_p = -\frac{Q}{4\pi a y}\left(\cos\theta'' - \cos\theta'\right)$$

where a, y, θ' and θ'' have the meanings shown in Figure 4. Here the values of U_p, V_p, and hence q_p are dependent upon two radius vectors for each source or sink instead of one where the point source-sink method is used. It is evident that the greater number of radius vectors involved will give a much smoother velocity distribution curve for the

same number of sources and sinks, that is, for the same number of equations.

As a test of the above assumptions and in order to obtain an experimental check on the pressure distribution curve, I intend to carry out an investigation of the line source-sink combination required to approximate the streamline form of the U. S. Navy, C-class airship hull, when immersed in a uniform flow. Since a larger number of equations seems desirable, it is intended to use not fewer than sixteen, altho in going from thirteen to sixteen equations the amount of computation involved is nearly doubled. However, the C-class airship is of such perfect streamline form, and plays such an important part in lighter than air ship design that the project seems to be decidedly worthwhile.

Dwight F. Windenburg

References.

1. Fuhrmann, G. - Theoretische und Experimentalle Untersuchungen an Balloonmodellen. Jahrbuch der Motorluftschiff - Studien - Gesellschaft Band V, 1911-12.

2. Karman, Th. V. - Berechnung der Durchverteilung an Luftsshiffkorpern, Abhandlungen aus dem Aerodynamischen Instituto an der Technischen Hochschule, Aachen, 1927.

3. Smith, R. H. - Aerodynamic Theory and Test of Strut Forms. N.A.C.A. Technical Report No. 311, 1929.

4. Prandtl, L. - Applications of Modern Hydrodynamics to Aeronautics. N.A.C.A. Technical Report No. 116, 1921.

5. Lamb, Horace. - Treatise on the Motion of Fluids.

TABLE 1

Constants In Equations 4 and 6

1	2	3	4	5	6	7	8	9	10	11	12	13	
1.0000	1.0000	1.0000	1.0000	1.0000	1.0000	1.0000	1.0000	1.0000	1.0000	1.0000	1.0000	1.0000	0
1.0000	.6544	.2586	.1212	.0677	.0291	.0125	.0069	.0044	.0030	.0022	.0019	.0017	25.1830
1.2065	1.0000	.6112	.3550	.2152	.0963	.0412	.0224	.0140	.0096	.0067	.0060	.0055	76.7054
1.3805	1.2645	1.0000	.7355	.5190	.2609	.1131	.0609	.0371	.0250	.0179	.0154	.0141	181.5927
1.4987	1.4181	1.2243	1.0000	.7757	.4319	.1901	.0995	.0598	.0395	.0279	.0239	.0217	258.0030
1.5922	1.5330	1.3872	1.2055	1.000	.6128	.2759	.1407	.0823	.0533	.0371	.0316	.0285	309.8143
1.7316	1.6983	1.6152	1.5052	1.3635	1.0000	.4948	.2396	.1310	.0804	.0537	.0450	.0403	359.9167
1.8527	1.8381	1.8023	1.7552	1.6926	1.4991	1.0000	.5009	.2448	.1344	.0527	.0670	.0589	370.5973
1.9182	1.9115	1.8953	1.8757	1.8498	1.7706	1.5173	1.0000	.4527	.2294	.1243	.0959	.0818	336.4842
1.9551	1.9520	1.9450	1.9363	1.9255	1.8944	1.8000	1.5547	1.0000	.4453	.2000	.1425	.1162	276.6894
1.9770	1.9757	1.9727	1.9691	1.9647	1.9529	1.9205	1.8435	1.6176	1.0000	.3824	.2377	.1787	199.4406
1.9905	1.9900	1.9890	1.9877	1.9863	1.9825	1.9730	1.9535	1.9035	1.7255	1.0000	.5337	.3400	116.6244
1.9954	1.9952	1.9947	1.9942	1.9935	1.9919	1.9880	1.9803	1.9625	1.9051	1.5786	1.0000	.5725	61.0847

-15-

TABLE II.

Point	X	Y	U_p	V_p	$(1+U_p)^2$	V_p^2	Q_p^2	$p = 1-Q_p^2$
0	0	0	-1.000	0	0	0	0	1.000
1	.737	2.002	- .973	+ .902	.001	.813	.814	+ .186
2	1.475	3.494	- .535	+ .583	.133	.340	.473	+ .527
3	2.949	5.376	- .808	+ .723	.627	.523	1.150	- .150
4	4.424	6.408	+ .088	+ .579	1.184	.335	1.519	- .519
5	5.899	7.022	+ .224	+ .389	1.498	.151	1.649	- .649
6	8.948	7.558	+ .230	+ .100	1.513	.010	1.523	- .523
7	13.272	7.680	+ .176	- .008	1.383	.000	1.383	- .383
8	17.696	7.318	+ .122	- .185	1.259	.034	1.293	- .293
9	22.120	6.636	+ .078	- .117	1.162	.014	1.176	- .176
10	26.544	5.634	+ .032	- .467	1.065	.218	1.283	- .283
11	30.967	4.196	+ .182	.000	1.397	.000	1.397	- .397
12	33.179	3.118	+ .043	-2.077	1.088	4.314	5.402	-4.402

-16-

Table III

Velocity Components due to each source.

$$u'_p = \frac{Q_K \cos \theta_{KP}}{4\pi r^2_{KP}} \qquad V'_p = \frac{Q_K \sin \theta_{KP}}{4\pi r^2_{KP}}$$

Source	U'_0	V'_0	U'_1	V'_1	U'_2	V'_2
1	16.43	0	0	-2.23	- .14	- .69
2	-10.71	0	-1.77	4.80	0	1.91
3	4.97	0	3.60	-3.26	1.17	-2.77
4	2.94	0	-2.88	1.56	-1.78	2.10
5	- .32	0	- .33	.13	- .27	.21
6	.41	0	.45	- .11	.44	- .21
7	- .12	0	- .13	.02	- .14	.04
8	.09	0	.09	- .01	.10	- .02
9	- .04	0	- .04	.00	- .05	.01
10	.04	0	.04	.00	.05	- .01
11	- .04	0	- .04	.00	- .04	.01
12	.05	0	.06	.00	.06	- .01
13	- .02	0	- .03	.00	- .03	.00
	7.80	0	- .97	.90	- .64	.58

Source	U'_3	V'_3	U'_4	V'_4	U'_5	V'_5
1	- .10	- .24	- .08	- .14	- .07	- .09
2	.20	.72	.20	.43	.18	.29
3	0	-1.50	- .22	- .98	- .29	- .69
4	- .49	1.79	0	1.40	.23	1.09
5	- .14	.26	- .06	.25	0	.22
6	.38	- .34	.30	- .44	.22	- .51
7	- .14	.07	- .15	.11	- .15	.15
8	.10	- .04	.11	- .05	.12	- .07
9	- .05	.01	- .05	.02	- .06	.03
10	.05	- .01	.05	- .02	.06	- .02
11	- .05	.01	- .05	.01	- .05	.02
12	.06	- .01	.07	- .02	.07	- .02
13	- .03	.00	- .03	.01	- .03	.01
	-.51	.72	.09	.58	.22	.39

Source	U'_6	V'_6	U'_7	V'_7	U'_8	V'_8
1	-.05	-.05	-.04	-.02	-.02	-.01
2	.14	.15	.10	.06	.07	.03
3	-.29	-.37	-.21	-.16	-.14	-.07
4	.38	.65	.32	.27	.22	.12
5	.06	.16	.07	.07	.05	.03
6	.00	-.57	-.21	-.36	-.19	-.16
7	-.14	.25	.00	.37	.16	.26
8	.15	-.13	.17	-.30	.00	-.51
9	-.08	.04	-.11	.10	-.15	.24
10	.07	-.03	.11	-.06	.17	-.14
11	-.07	.02	-.09	.04	-.14	.08
12	.09	-.03	.12	-.05	.19	-.09
13	-.04	.01	-.05	.02	-.08	.03
	.23	.10	.18	-.01	.12	-.18

Source	U'_9	V'_9	U'_{10}	V'_{10}	U'_{11}	V'_{11}
1	-.02	-.01	-.01	.00	-.01	.00
2	.05	.02	.03	.01	.03	.00
3	-.10	-.03	-.07	-.02	-.05	-.01
4	.15	.05	.11	.03	.08	.01
5	.03	.01	.02	.01	.02	.00
6	-.13	-.07	-.09	-.03	-.06	-.01
7	.14	.11	.10	.04	.06	.02
8	-.24	-.36	-.21	-.18	-.13	-.04
9	.00	.47	.25	.32	.19	.09
10	.25	-.38	.00	-.92	-.57	-.54
11	-.24	.19	-.45	.58	.00	2.14
12	.51	-.19	.61	-.52	1.25	-2.37
13	-.13	.07	-.25	.17	-.62	.71
	.08	-.12	.03	-.47	.18	.00

Source	U'_{12}	V'_{12}	U'_{14}	V'_{14}
1	-.01	.00	-.01	.00
2	.02	.00	.02	.00
3	-.05	.00	-.04	.00
4	.07	.01	.05	.00
5	.01	.00	.01	.00
6	-.05	-.01	-.05	.00
7	.05	.01	.04	.00
8	-.11	-.02	-.09	.00
9	.15	.04	.12	.00
10	-.49	-.23	-.37	.00
11	1.49	2.11	1.93	.00
12	.00	-6.21	-12.35	.00
13	-1.05	2.23	54.19	.00
	.04	-2.08	43.46	

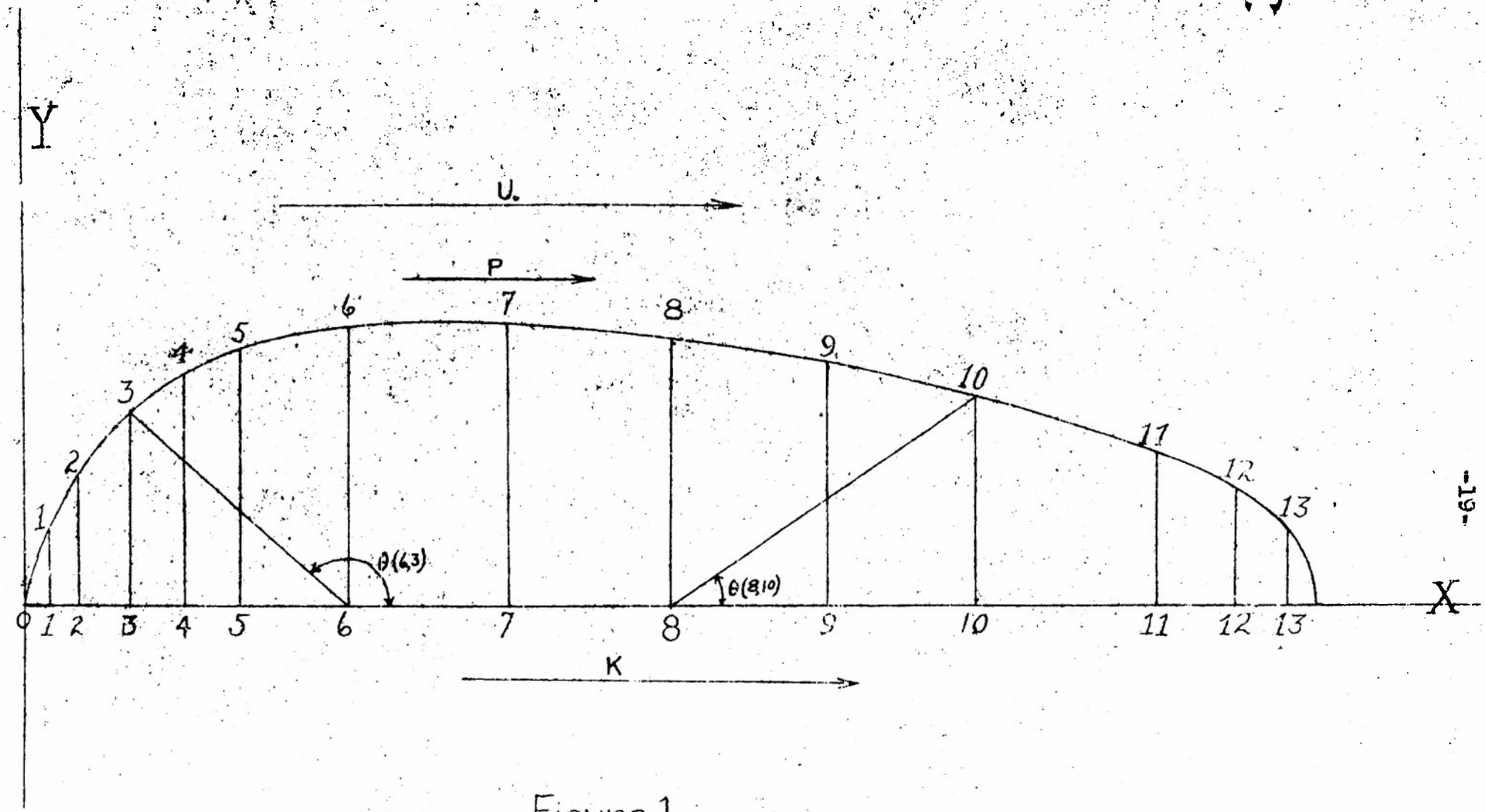

Figure 1

-19-

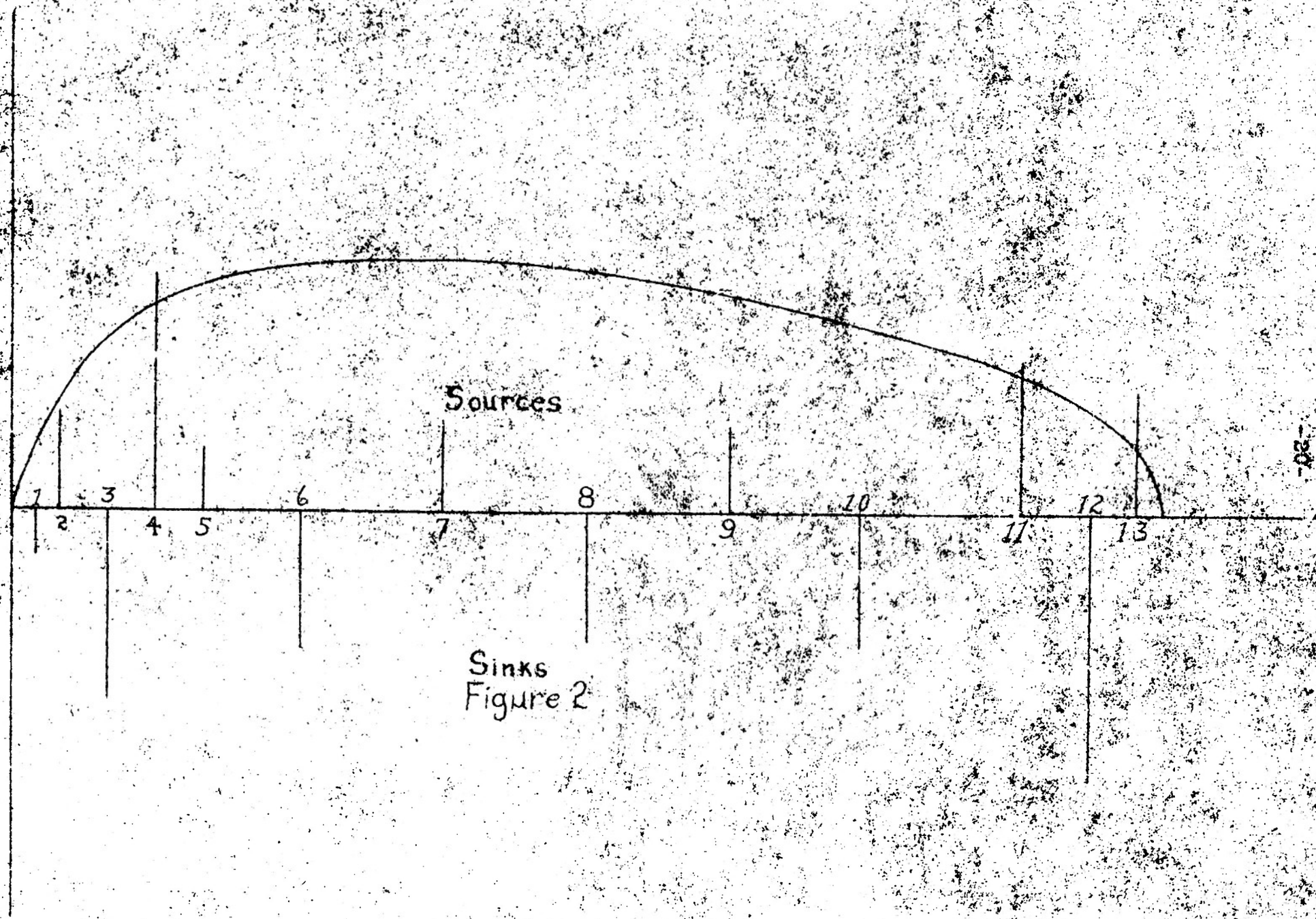

Figure 2

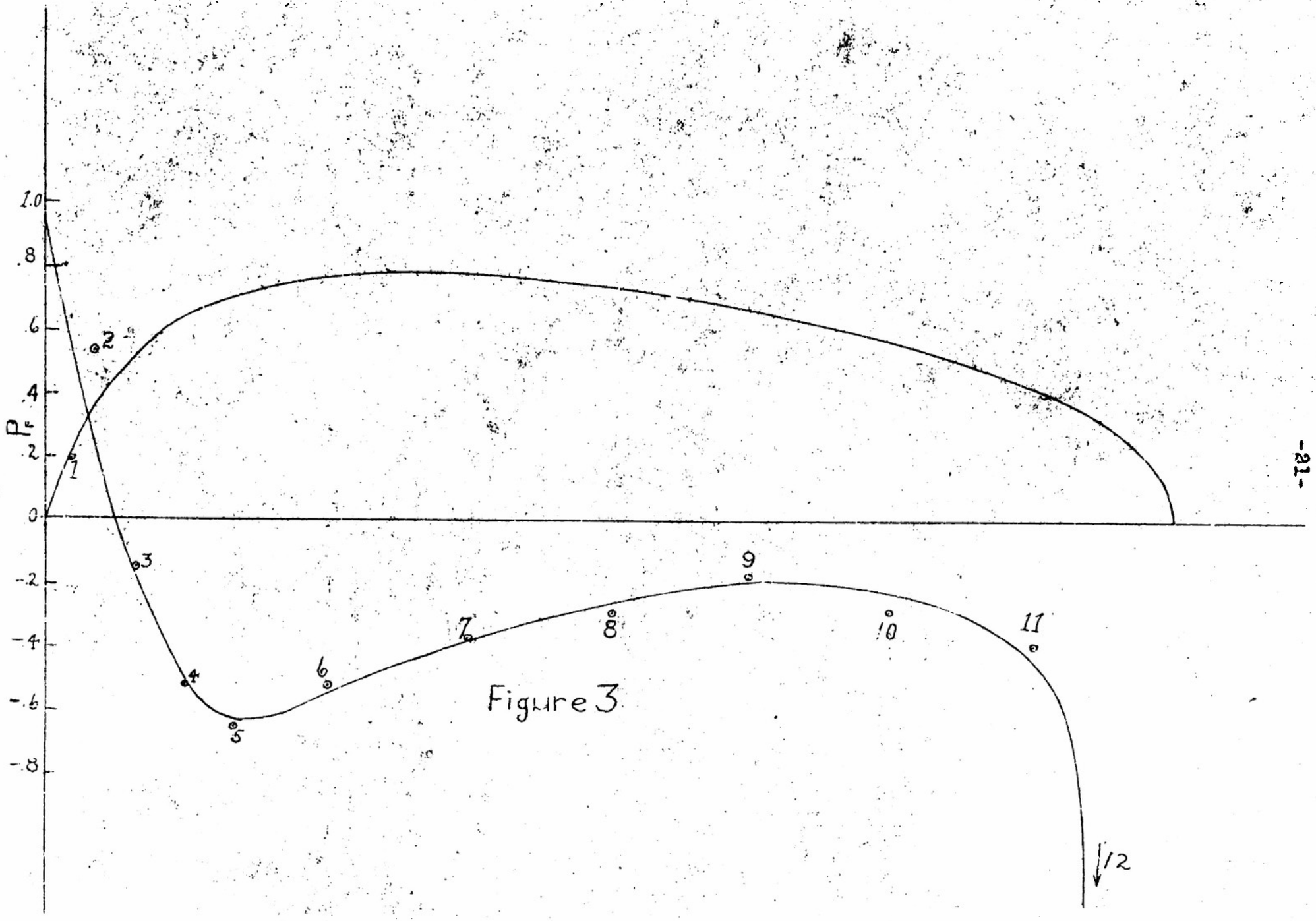

Figure 3

-21-

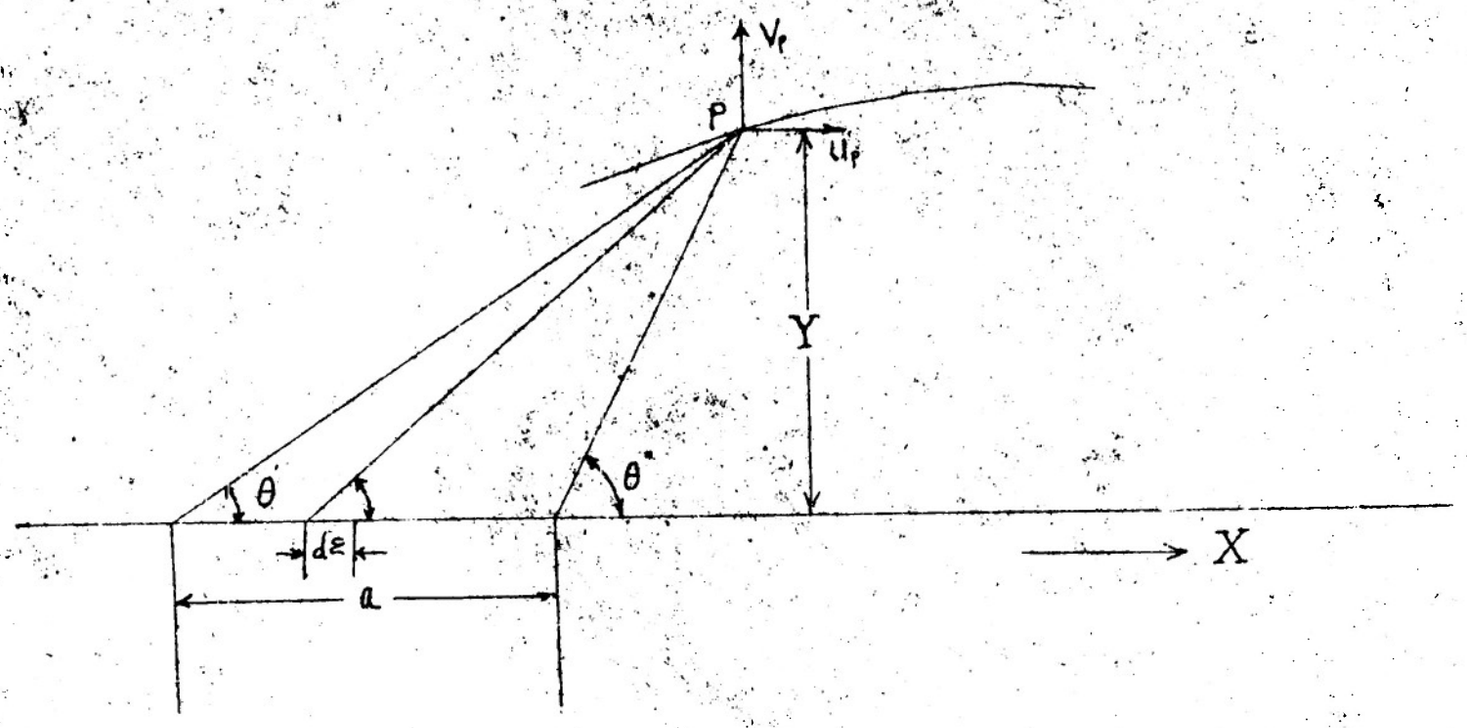

Figure 4

-22-

Reproduced by

DOCUMENT SERVICE CENTER

ARMED SERVICES TECHNICAL INFORMATION AGENCY

U. B. BUILDING, DAYTON 2, OHIO

REEL-C 71741

A.T.I 202786

"NOTICE: When Government or other drawings, specifications or other data are used for any purpose other than in connection with a definitely related Government procurement operation, the U.S. Government thereby incurs no responsibility, nor any obligation whatsoever; and the fact that the Government may have formulated, furnished, or in any way supplied the said drawings, specifications or other data is not to be regarded by implication or otherwise as in any manner licensing the holder or any other person or corporation, or conveying any rights or permission to manufacture, use or sell any patented invention that may in any way be related thereto."

UNCLASSIFIED

STI-ATI-202 786 * 104650 UNCLASSIFIED P20/4

U.S. Experimental Model Basin, Navy Yard, Washington, D.C.
A THEORETICAL INVESTIGATION OF THE POINT SOURCE SINK ENVELOPE IN THREE DIMENSIONS. 1930, 22p incl illus, tables.
Rept no. 271.
DTMB

Fluid Mechanics (9) Sources & sinks
Dynamics (I)

(Copies obtainable from ASTIA-DSC)

AD-A800 020 *-Fluid Mechanics
Sources

UNCLASSIFIED

NTIS, Auth. DWTNSRDC Ltr, 4 Aug 78

STI-ATI-202 786 UNCLASSIFIED

U. S. Experimental Model Basin, Navy Yard, Washington, D.C.
A THEORETICAL INVESTIGATION OF THE POINT SOURCE SINK ENVELOPE IN THREE DIMENSIONS. 1930, 22p incl illus, tables. Rept no. 271.

Fluid Mechanics (9) Sources & sinks
Dynamics (I)

(Copies obtainable from ASTIA-DSC)

UNCLASSIFIED