Reproduced by

DOCUMENT SERVICE CENTER

ARMED SERVICES TECHNICAL INFORMATION AGENCY

[illegible] BUILDING, DAYTON, [illegible]

FUEL-C[illegible]

[illegible]0108

[illegible] Government or other drawings, specifications or [illegible] for any purpose other than in connection with [illegible] Government procurement operation, the U.S. Government [illegible] responsibility, nor any obligation whatsoe[illegible] fact that the Government may have formulated, furnish[illegible] supplied the said drawings, specifications or other data [illegible] be regarded by implication or otherwise as in any manner licensing [illegible] or any other person or corporation, or conveying any rights or permission [illegible] manufacture, use or sell any patented invention that may in any way be related thereto.

UNCLASSIFIED

DESCRIPTION OF MANUFACTURE

OPTICAL ELEMENTS
FOR
FIRE CONTROL INSTRUMENTS

Prepared by

ANDERSON, NICHOLS, ASSOCIATES

CONTRACT W36-038-ORD-3476

November 1945

Printed April 1951

PREFACE

This description of manufacture manual is bound in loose-leaf form to permit revision by page or chapter without reprinting the entire book. This form was necessitated by the fact that the data, as printed herein, was completed in 1945 with the printing being delayed until this time. Therefore, some of the equipment, methods and materials described herein may be outdated. However, the greater part of the data is currently applicable, and in order to make that portion immediately available, the manual was printed without revision. Outdated information will be revised and issued for insertion in the manual as soon as is practicable.

FOREWORD

This manual has been prepared with the twofold purpose of providing a reference book of the various processes and methods that are in current use for the manufacture and inspection of precision optical elements used in fire control and other optical instruments, and of providing a textbook that can be used as a basis for training supervisory and working personnel in the making of such elements. It will be of value to production and industrial engineers who may be responsible for planning the production of precision optical elements, and to operating managers and superintendents who are engaged in their manufacture and who must train operating personnel, either as skilled craftsmen or for specific duties. Since much has been published on the design of optical systems and optical instruments, this manual is not intended for the technical optical engineer, but rather for those who may be interested in the actual manufacture of lenses, prisms, and other optical elements.

The editors have made a special effort to use a logical, consistent style of nomenclature throughout the manual, thus taking an important step toward the standardization of the terminology used in this field, where, at present, there is no general uniformity.

Many of the tables and charts have been prepared specially for this manual and are designed to provide a convenient means for selecting the proper material, method, or tool to be used for a particular operation, or to replace the use of mathematical formulas. In these cases, the formulas on which the tables and charts are based are given either in the text or in an appendix.

An effort has been made, in assembling and preparing the material, to study and compare various individual practices and to reduce them to a practical working basis with a logical sequence.

Although most of the material has been contributed by the staff of the Optical Shops of the Instrument Division at Frankford Arsenal, the executive officers assigned to the Division, and the several engineering officers, valuable contributions and assistance have been received from many leading manufacturers and from other government agencies, among them, the Navy Department, the United States Bureau of Standards, and the Apprentice Training Service of the United States Department of Labor. Many leading manufacturers have supplied illustrative and informative material, as indicated in headings and figure captions throughout the book. The manual was compiled and edited by Anderson, Nichols, Associates.

CONTENTS

	Page No.
Foreword	v
Chapter 1.—Description of Optical Elements	101
Chapter 2.—Inspecting Optical Glass	201
Chapter 3.—Glass Cutting	301
Chapter 4.—Rough Grinding Prisms by Hand	401
Chapter 5.—Rough Grinding Prisms with Automatic Machinery	501
Chapter 6.—Rough Grinding Glass Plates	601
Chapter 7.—Rough Grinding Lenses by Hand	701
Chapter 8.—Rough Grinding Lenses with Automatic Machinery	801
Chapter 9.—Blocking Flatwork	901
Chapter 10.—Blocking Lenses	1001
Chapter 11.—Fine Grinding and Polishing Flatwork	1101
Chapter 12.—Fine Grinding and Polishing Lenses	1201
Chapter 13.—Centering and Edging Lenses	1301
Chapter 14.—Small Abbe Prisms	1401
Chapter 15.—Correcting Roof-Angle Prisms	1501
Chapter 16.—Wedges, Windows, and Mirrors	1601
Chapter 17.—Etching Reticles	1701
Chapter 18.—Chemical Silvering	1801
Chapter 19.—Evaporated Film Coatings	1901
Chapter 20.—Cementing Lenses	2001
Chapter 21.—Cementing Flatwork	2101
Chapter 22.—Optical Flats and Test Glasses	2201
Chapter 23.—Cleaning Optical Elements	2301
Chapter 24.—Inspecting Optical Elements	2401
Chapter 25.—Materials	2501
Appendix A.—Function of Prisms	A1
Appendix B.—Derivation of Formula for Light Absorption	B1
Appendix C.—Method of Predetermining the Refractive Index of a Liquid	C1
Appendix D.—Standard Terminology for Blocking Fixtures	D1
Bibliography	F1

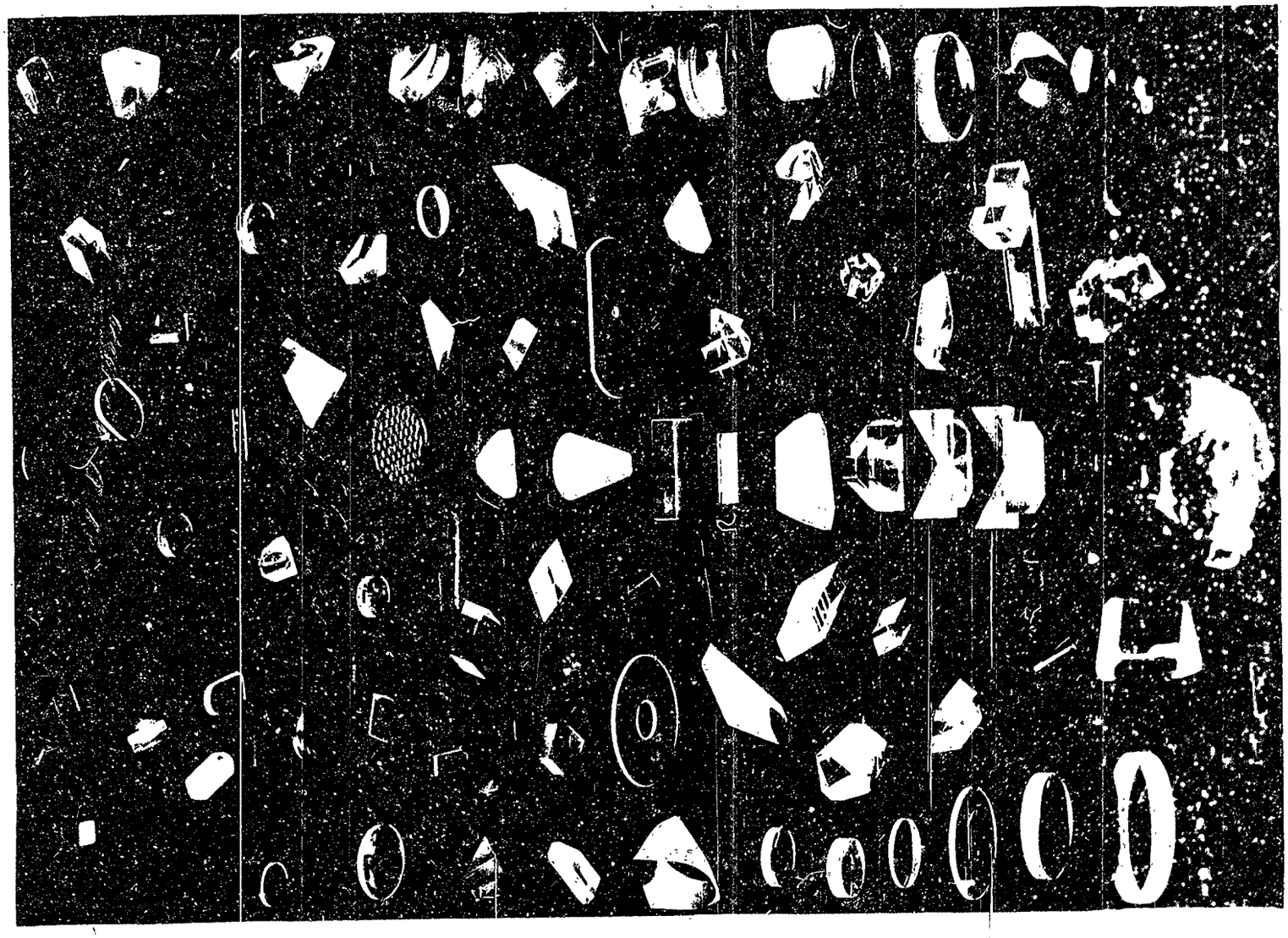

Frontispiece

CHAPTER 1

DESCRIPTION OF OPTICAL ELEMENTS

	Page No.
Flatwork.	102
Prisms.	103
Porro Prism.	104
Porro Prism Systems.	104
Abbe Prism.	105
Porro Abbe Prism System.	105
Right-angle Reflecting Prism.	105
Roof Prisms.	105
Amici Prism.	105
Leman, or Sprenger Prism.	106
Brashear–Hastings, or Abbe Roof Prism.	106
Rhomboid Prism, or Rhomb.	107
Dove, or Rotating Prism.	107
Penta Prism.	110
Ocular Prisms.	110
Ocular Prism Used in Height Finder M1.	110
Ocular Prism Assembly Used in Small Range Finders.	110
Wedge Prism.	111
Glass Plates.	111
Windows.	111
Filters.	111
Reticles.	113
Front Surface Mirrors.	114
Lenses.	116

Many instruments in use today must be equipped with optical elements of high precision in order to operate satisfactorily. In such an instrument, the accuracy of its indications is limited by the precision of the optical elements that it contains. Precision instruments include, not only fire control equipment, such as tank periscopes, range finders, height finders, and gun sights, but also cameras, microscopes, telescopes, binoculars, collimators, comparators, spectroscopes, and other scientific instruments.

High precision elements are especially necessary for fire control instruments because modern artillery must be able to fire accurately at targets that may not be visible to the gunner, that may be moving rapidly, and that may be either at close range or at great distances or heights.

Optical elements are classified as prisms, windows, filters, reticles, mirrors, and lenses; and may be used for different purposes and in a variety of combinations. An azimuth type range finder, Figure 101, with its optical system, Figure 102, is an example of an instrument which uses precision elements. While this particular optical system illustrates the basic design for this type of range finder, it will be seen that it does not contain every type of optical element.

The manufacturing methods that are described in this book and the common types of elements that are described in this chapter are all associated with fire control instruments. However, the same processes and equipment may be used with equal effectiveness to make optical elements for other kinds of precision instruments.

The polished surfaces of optical elements may be divided into two general divisions: namely, 'flat' and 'spherical'; and the elements themselves, into 'flatwork' and 'lenses'. Elements that have at least one polished spherical surface are called 'lenses' and if all of their polished surfaces are flat, they are classed as 'flatwork'. This means that an element with one flat surface and one spherical surface would be known as a lens, even though the flat surface is processed in the same way as the surfaces of flatwork.

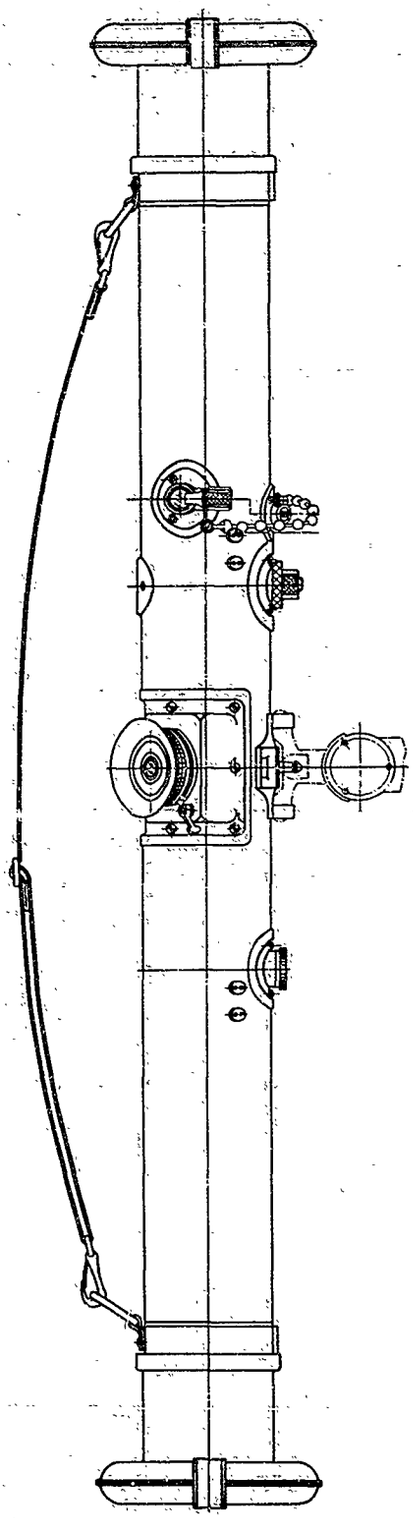

Figure 101.—A Typical Fire Control Instrument. (80-cm Azimuth Type Range Finder M1917)

FLATWORK

The principle example of flatwork is the 'prism', the most common types of which are described briefly in this chapter. Another

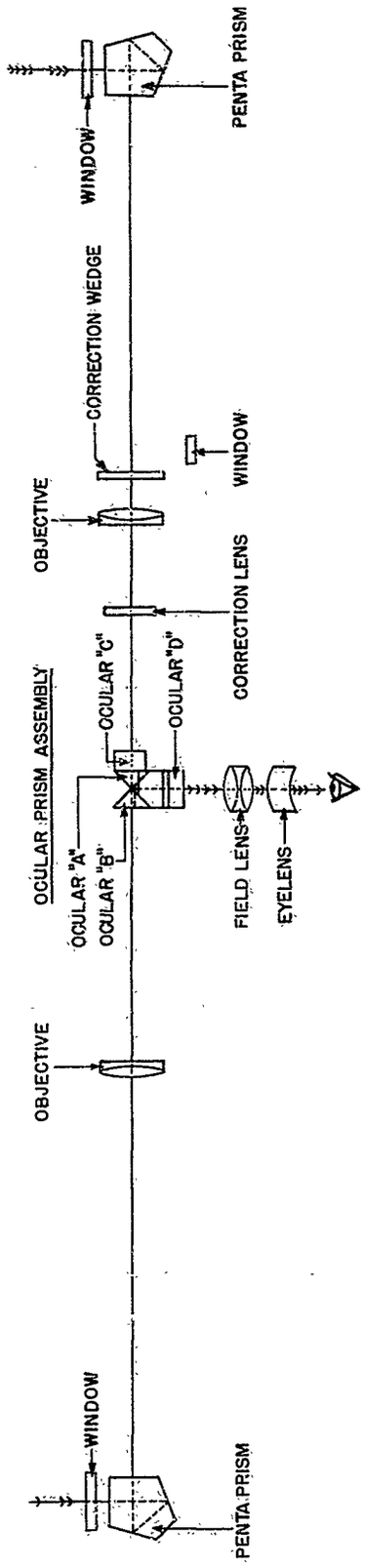

Figure 102.—Optical System of 80-cm Azimuth Type Range Finder M1917.

group of elements that are included in this class are called 'glass plates'. These may be round, square, rectangular, or irregular-shaped thin elements, the opposite faces of which are flat and substantially parallel. Windows, filters, reticles, and mirrors are examples of glass plates.

Prisms

Prisms (Figures 103 through 117) differ from lenses in that their working (polished) surfaces are normally plane (plano) rather than spherical. They are used in fire control instruments to change the directions of light rays. This may be done by reflection (reflecting prisms) or refraction (refracting prisms). Some complicated prisms both reflect and refract light.

The term 'prism' may be extended to include assembled units or 'clusters' composed of two or more prisms cemented together to form a single unit (see Figures 104(b) and 116). The prisms shown in Figure 104(a) are not cemented but are mounted in the instrument at a given separation. Such a group is called a 'prism system'. Figures 103 through 117 show only a few of the most common prisms and prism systems. A large number of other prism designs are used to a lesser extent. Reflecting prisms contain one or more surfaces which act as mirrors. The arrow diagrams in these figures show how the internal reflections invert and revert the image. For an explanation of 'inversion' and 'reversion' and function of prisms, see Appendix A. Refracting prisms, Figure 117, are used when only a small change in direction and no inversion or reversion is required.

Throughout this book the 'working surfaces' of a prism, *i.e.*, the entrance ('incident') and exit ('emergent') surfaces, as well as any others which may reflect or refract the light rays, are called 'faces'. These '*faces*' *are always polished.* The unpolished (ground) surfaces are usually called 'sides', 'ends', 'tops', or 'corners'. Some prisms have their 'ends' or 'corners' rounded to facilitate mounting in the instrument, while most 'edges' (where surfaces meet) are beveled. 'Roof edges', however, are never

beveled, since their function depends on having a sharp or knife-edge.

A technical discussion of the function of prisms may be found in Appendix A. The following description relates to certain common types of prisms whose manufacture is described in this volume. Most of the prisms described are made in several sizes, so no precise dimensions are given here, as they would appear on the working drawings, together with any angular or performance tolerances.

Porro Prism.—In Figure 103, the prism is resting on its 'hypotenuse'. The '90° faces' form a right angle with each other. The 'sides' are parallel to each other and perpendicular to the 'hypotenuse' and to the '90° faces'. The 'top' is ground approximately parallel to the 'hypotenuse'. The 'ends' are usually rounded for mounting the prism in the instrument, though at times they may be simply ground off at an angle. Sometimes a 'groove' may be ground across the middle of the 'hypotenuse'.

Porro Prism Systems.—Porro prisms may be used in a variety of systems where it is desired that the image be inverted and the rays parallel. A familiar example is that of two porro prisms arranged as shown in Figure 104(a) which is one type of erecting system used in binoculars. This system also makes possible the use of a shorter instrument without reducing the length of the light path. Another type of erecting system is illustrated in Figure 104(b) and consists of two right-angle reflecting prisms cemented to the hypotenuse of a porro prism.

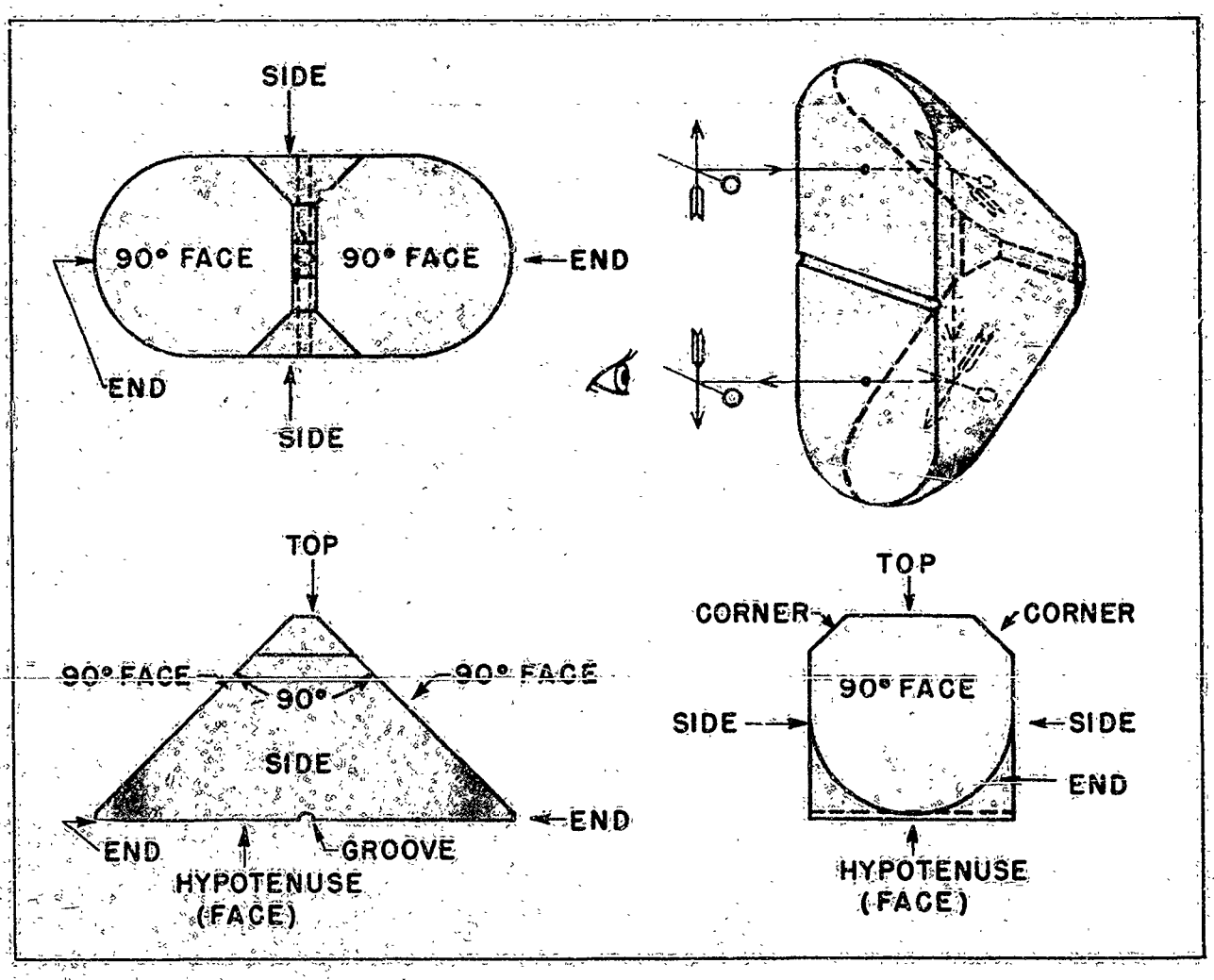

Figure 103.—Porro Prism.
Light Path Deviated 180°—Emergent Rays Parallel with Incident Rays.

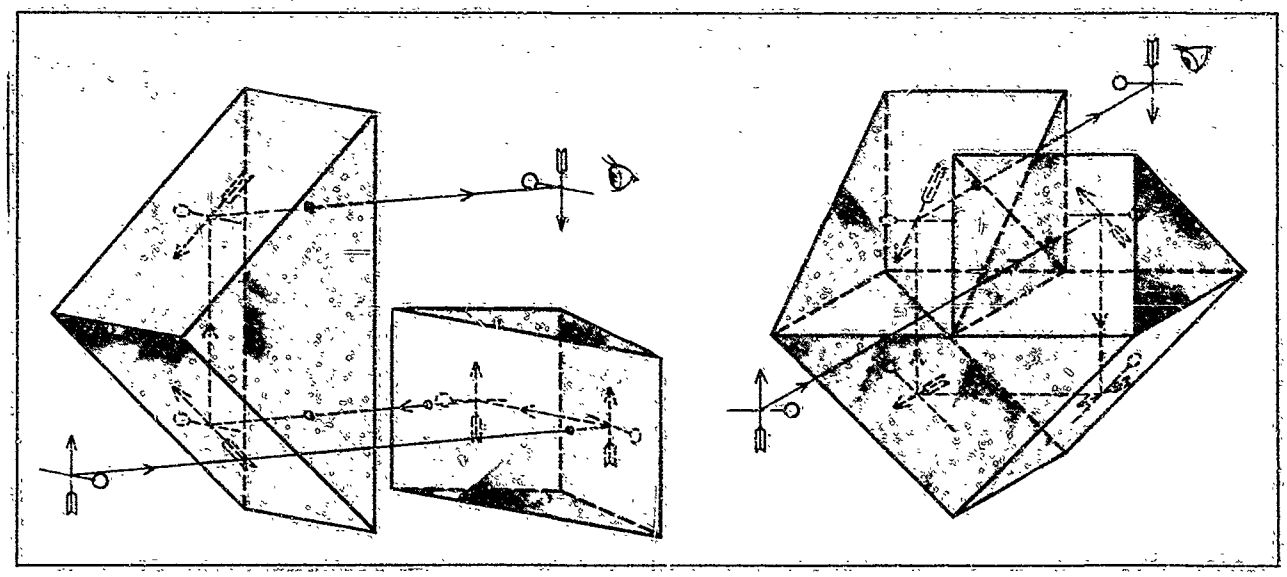

Figure 104.—Porro Prism Systems.
Image Inverted—Emergent Rays Parallel with Incident Rays.

Abbe Prism.—The abbe (pronounced *ab'bee*) prism is shown in Figure 105. The angle between the polished 'faces' is 45° as indicated. The 'side' is perpendicular to the 'top', the 'bottom 90° face', and the 'end 45° face'. The 'top' is perpendicular to the 'side 90° face' and the 'diagonal 45° face'. One 'end' is usually rounded and the corners on the other end ground off to facilitate mounting. The components are not customarily designated as 'left' and 'right' although the prism may be cut in the reverse fashion to that shown in the drawing.

Porro Abbe Prism System.—A modification of the porro system shown in Figure 104(b), and with similar properties, is called a 'porro abbe system', and consists of two left or two right abbe prisms arranged as shown in Figure 106. When this system is used, it is possible to separate the prisms, when desired, to facilitate mounting, to lengthen the light path between the prisms or for any other reason.

Right-angle Reflecting Prism.—The right-angle reflecting prism (Figure 107), while similar to the porro prism in general appearance, is used to change the direction of the light rays through 90° instead of 180°. To accomplish this, the rays enter through one '90° face', are reflected on the 'hypotenuse', and leave reverted through the other '90° face'. For this reason, the '90° faces' are approximately square, while the 'faces' and 'sides' make the same angles with each other that they do in the porro prism.

Roof Prisms. *Amici Prism.*—The amici (pronounced *a–mee'chee*) roof prism (Figure 108) may be considered similar to a right-angle reflecting prism, but has two 'roof faces' perpendicular to each other which replace the 'hypotenuse' face of the right-angle reflecting prism. Much more of the base 90° angle is ground off than in the case of the porro prism, making an appreciable 'top' (or 'bottom' as some manufacturers prefer to term it). The 'roof faces' must be perpendicular to each other within a few seconds. The '90° faces' of the amici prism are perpendicular to the parallel 'sides'. The 'top' is ground approximately perpendicular to the plane bisecting the 90° base angle.

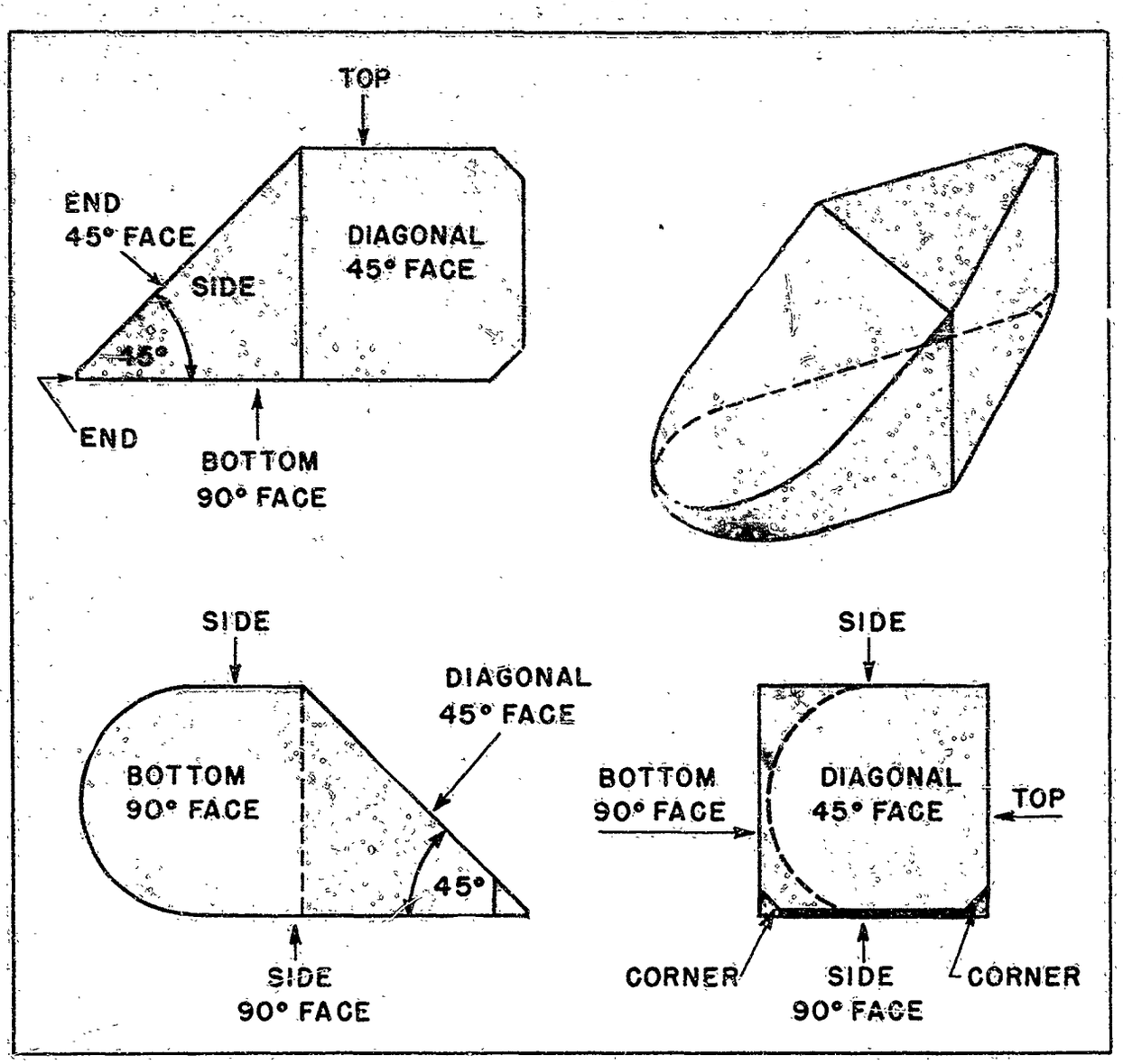

Figure 105.—Abbe Prism (Left).

Leman, or Sprenger Prism.—The leman (pronounced *lee'mun*) roof prism is represented in Figure 109. The 'faces' (excepting only the 'roof faces') are all perpendicular to the two parallel 'sides'. The 'top face' is parallel to the 'bottom face', and forms an angle of 60° with the 'angle face'. The 'end' is perpendicular to the 'bottom face' and the 'sides'. The 'roof faces' are perpendicular to each other to within a few seconds and form angles of 135° with the 'sides'. The projection of the 'roof edge' is at 30° to the 'bottom face'. A 'cylindrical surface', used in mounting the prism, is ground into the prism with its axis perpendicular to the 'sides'.

Brashear-Hastings, or Abbe Roof Prism.—The Brashear-Hastings prism consists, usually, of one roof element and two reflecting prisms, all cemented together as shown in Figure 110. In this prism, the image is inverted but there is no deviation of the light path. The reflecting prisms are made with 30° and 60° faces while the roof faces make 135° with the sides and 90° with each other as usual. This prism may be made in two pieces (instead of three) by

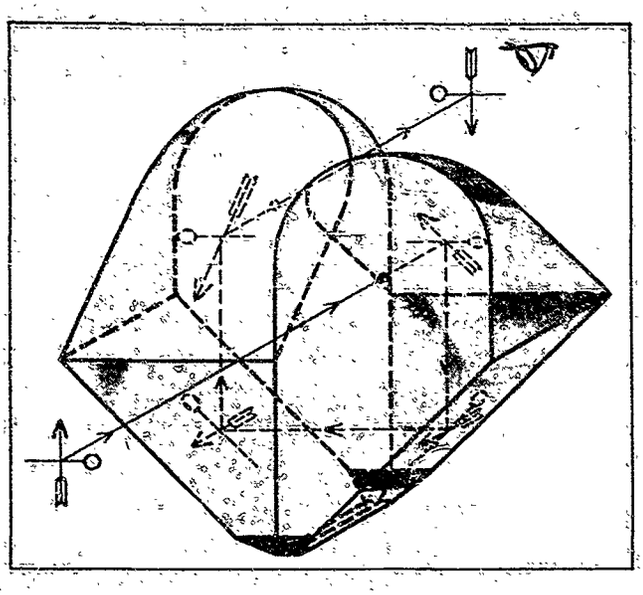

Figure 106.—Porro Abbe Prism System. Image Inverted—Emergent Rays Parallel with Incident Rays.

combining each reflecting prism with a portion of the roof element.

Rhomboid Prism, or Rhomb.—The rhomboid prism, shown in Figure 111 has three pairs of parallel surfaces. The two 'sides' are left unpolished and are perpendicular to the four 'faces', which are polished. Rhomboids are generally made with two 45° angles and two 135° angles between the 'faces'. The performance of the prism is determined by the parallelism of the surfaces and the accuracy of the angles.

Dove, or Rotating Prism.—This prism is shown in Figure 112. The 'inclined faces' form angles of 90° not only between themselves, but also with the parallel 'sides', and 45° with the 'hypotenuse'. A circular 'groove' for mounting the prism is ground in the 'top'.

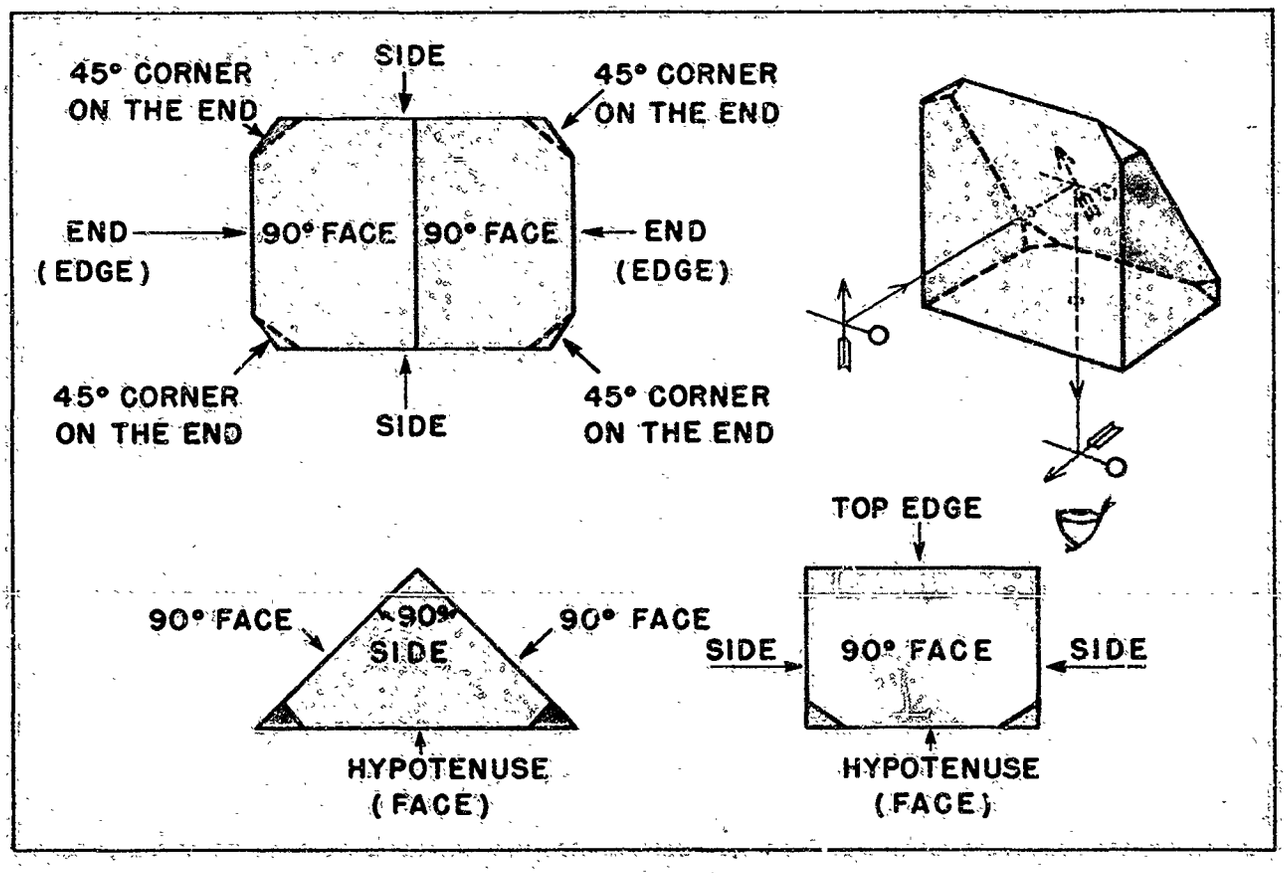

Figure 107.—Right-angle Reflecting Prism. Image Reverted—Emergent Rays Deviated 90° from Incident Rays.

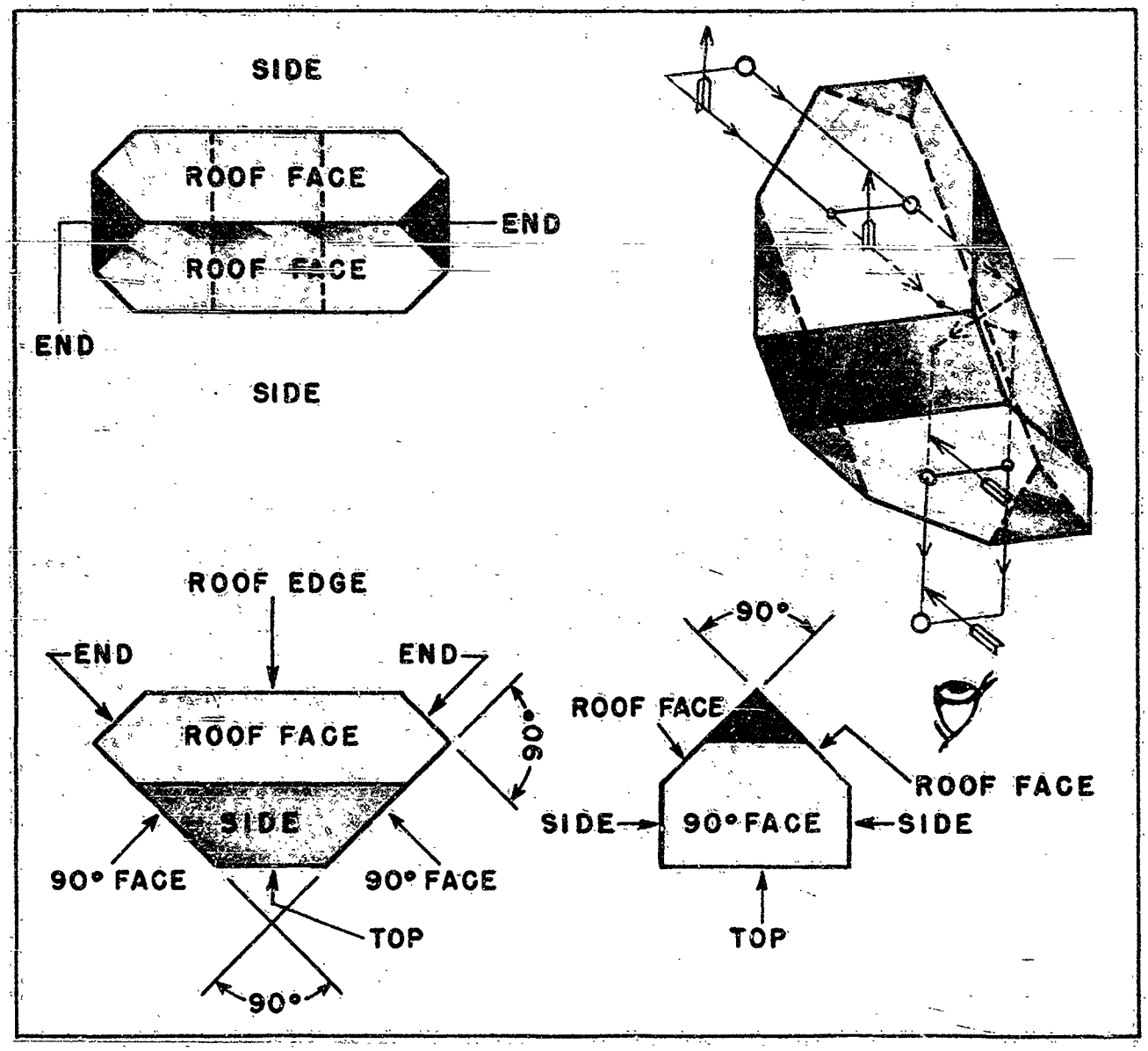

Figure 108.—Amici Roof Prism.
Image Inverted—Emergent Rays Deviated 90° from Incident Rays.

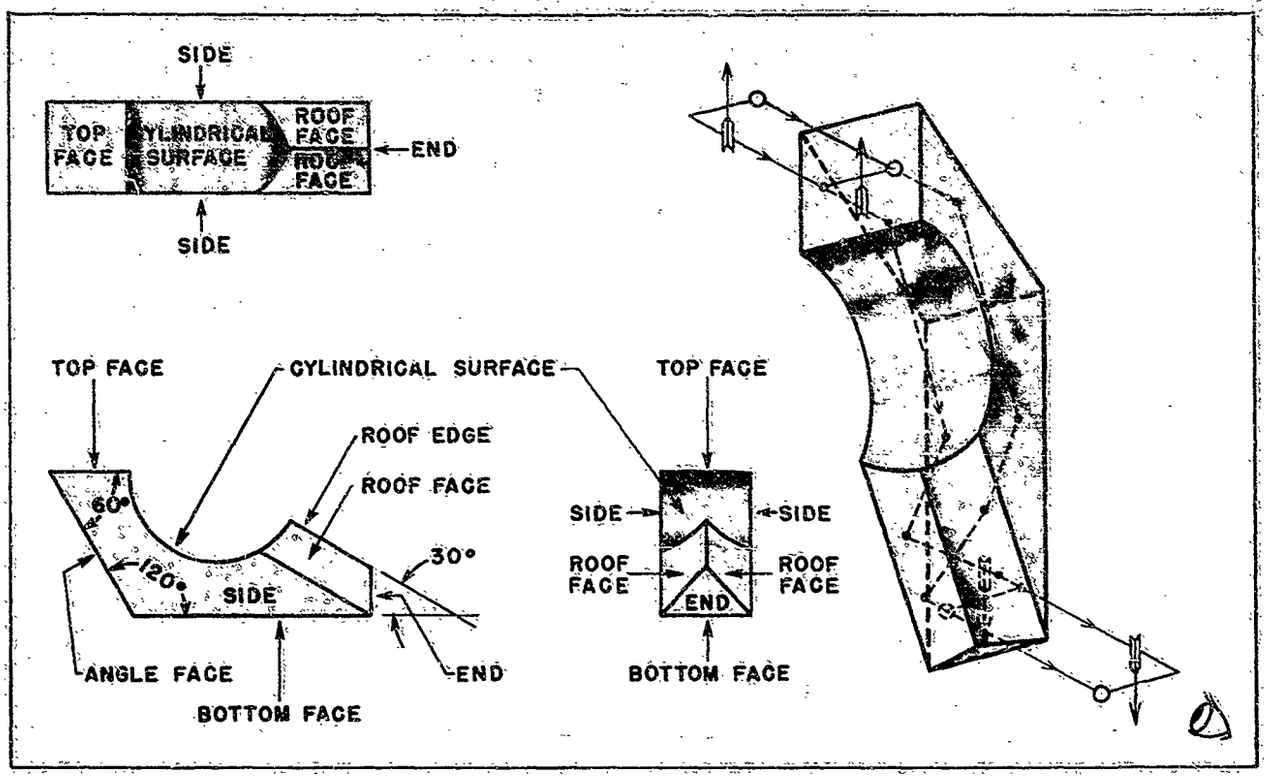

Figure 109.—Leman, or Sprenger Prism.
Image Inverted—Emergent Rays Parallel with Incident Rays.

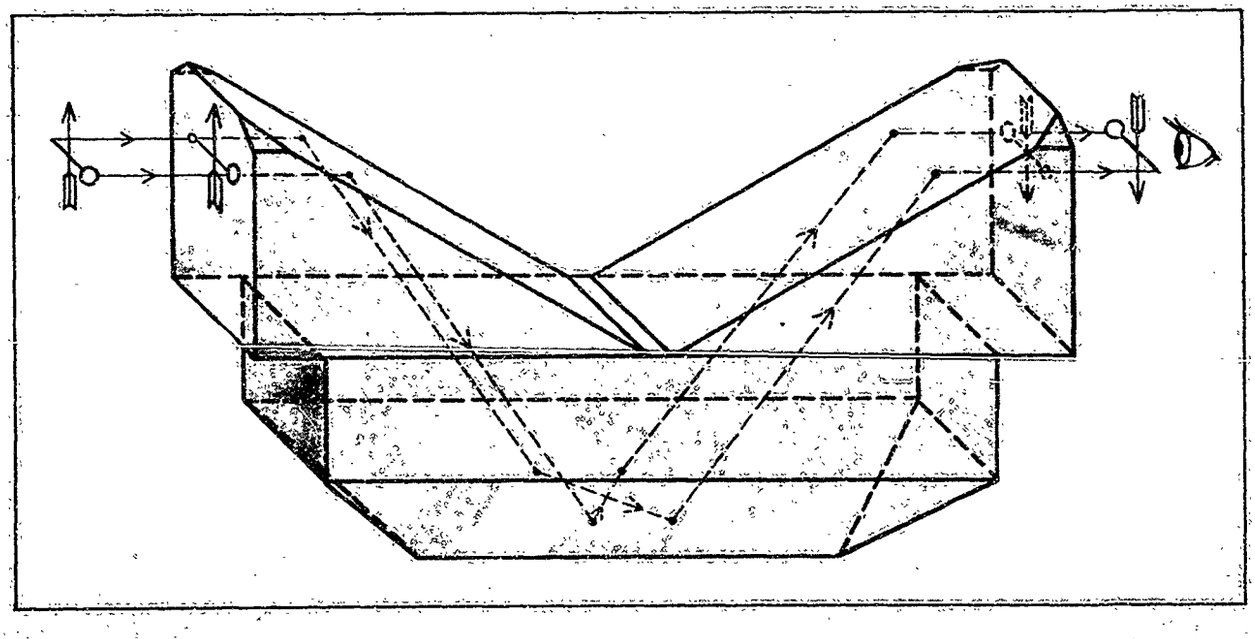

Figure 110.—Brashear-Hastings, or Abbe Roof Prism.
Image Inverted—No Deviation.

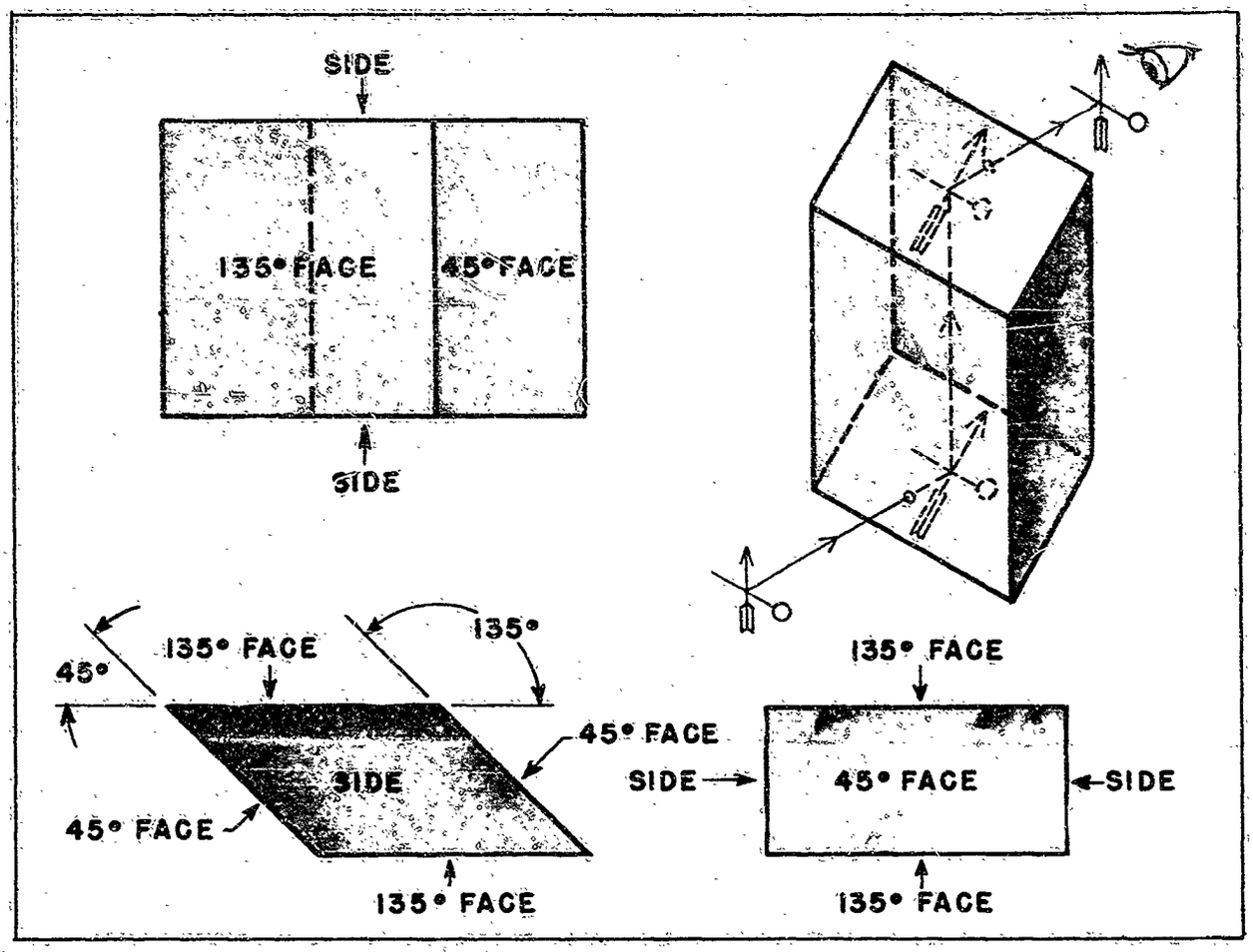

Figure 111.—Rhomboid Prism, or Rhomb.
Image Displaced—Emergent Rays Parallel with Incident Rays.

Penta Prism.—The penta prism is illustrated in Figure 113. It has two parallel 'sides', and four 'faces' two of which are silvered. The '90° faces' are perpendicular to each other and form angles of 112½° with their adjacent 'silvered faces'. The 'silvered faces' form an angle of 45° with each other and all 'faces' are perpendicular to the parallel 'sides'. The apex of the 45° angle formed by the 'silvered faces' is ground off symmetrically to make the 'end'. This 'end' is also perpendicular to the two 'sides', and forms angles of approximately 112½° with both 'silvered faces'.

Ocular Prisms. *Ocular Prism Used in Height Finder, M1.*—A 'left' ocular prism is represented in Figure 114. The 'top' and '90° face' are parallel, and both are perpendicular to the 'silvered face', the 'side', the 'slanting face', and the 'end'. The 'slanting face' forms an angle of 10° with the 'side'. The 'silvered face' forms an angle of 130° with the 'side' and an angle of 40° with the 'slanting face'. The '45° face' forms an angle of 45° with the '90° face', 135° with the 'top', and is perpendicular to the 'side'. As an aid in grinding, the angle between the 'slanting face' and the '45° face' has been computed and is indicated in the figure as 97° 6′.

The optical system in a height finder requires a corresponding 'right' ocular prism. Except for the angle of the 'slanting face' and that of the 'silvered face', the prism faces are identical with those of an abbe prism.

Ocular Prism Assembly Used in Small Range Finders.—Assemblies of this type are used in most small range finders and are placed

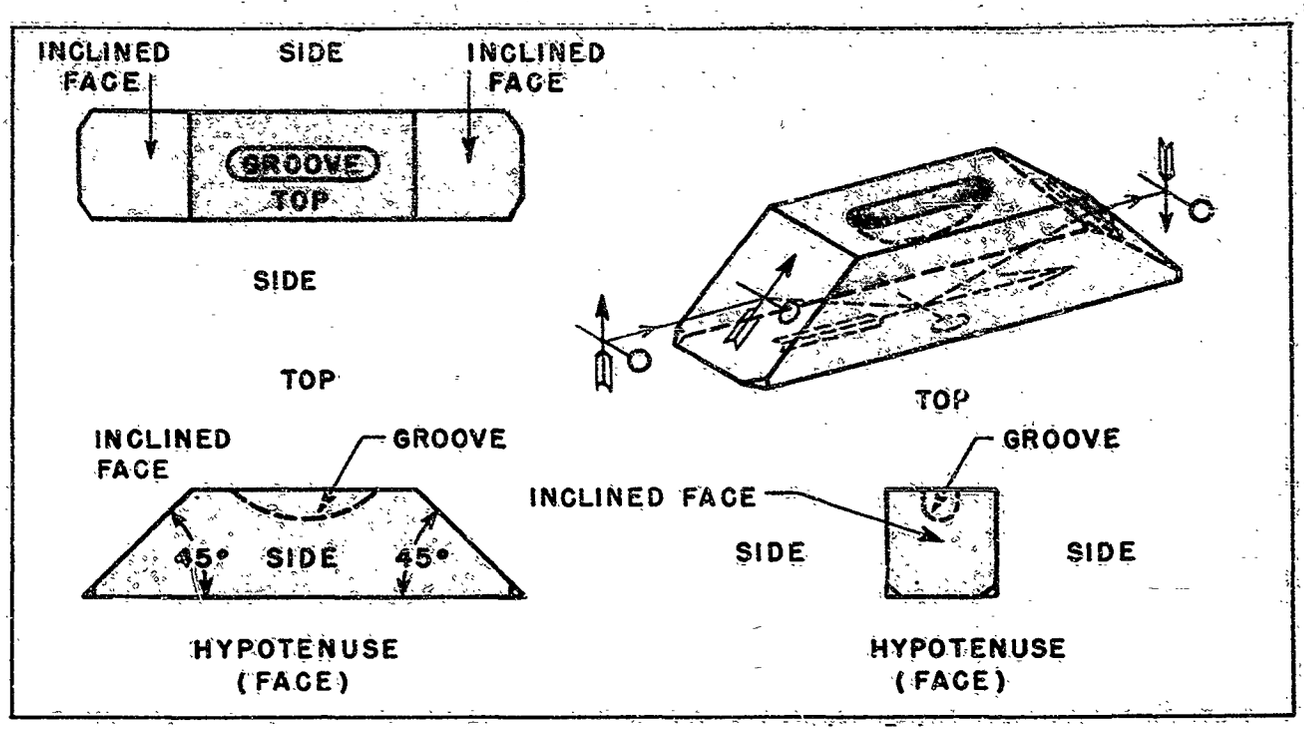

Figure 112.—Dove, or Rotating Prism.
Image Reverted—No Deviation.

directly in front of the eyepiece (as viewed from the object). Figures 102 and 116 show an assembly consisting of two components of the same general design ('ocular "A"', and 'ocular "B"'), a rhomboid prism or 'rhomb' ('ocular "C"'), and a wedge prism ('ocular "D"'). In some types, for example, the 80-cm base M1917 azimuth type range finder, a 'reticle slab' is provided between oculars "A" and "B" as shown in Figure 116.

The ocular "A" prism is shown in detail in Figure 115. The ground 'side' is parallel to the polished 'side face'. The '45° face' forms an angle of 45° with the 'bottom face'. The 'top' and 'bottom face' are parallel, and both are perpendicular to the parallel 'side' and 'side face'. The '25° face' is perpendicular to the 'top' and 'bottom face', and forms the specified angle (in this case 25°) with the 'side face'.

Wedge Prism.—The refracting prism shown in Figure 117 finds many applications in fire control work. It is used in range finders or height finders to measure angles ('measuring wedge'); or it may be used to enter a correction into optical paths for deviations due to temperature or other changes ('correction wedge'). In Figure 116, a wedge prism (ocular "D") is cemented to the ocular "A" prism in order to direct the light paths at the proper angle.

Glass Plates

As previously discussed, a 'glass plate' is a type of flatwork consisting of a smooth, thin piece of uniform thickness, with both flat surfaces polished.

Windows.—A window may be processed from either optical glass or ordinary plate glass according to its specific use. Although windows of various shapes are used, the majority are circular. The degree of accuracy required in their manufacture varies according to the instrument.

Filters.—Filters are made of special types of colored glass selected for their ability to reduce the strain on the observer's eyes and to assist the observer in viewing the target more favorably under conditions of strong sunlight, haze, etc. Many shades of filter glass are used according to the condition of use and the particular requirements of the user. Neutral filters

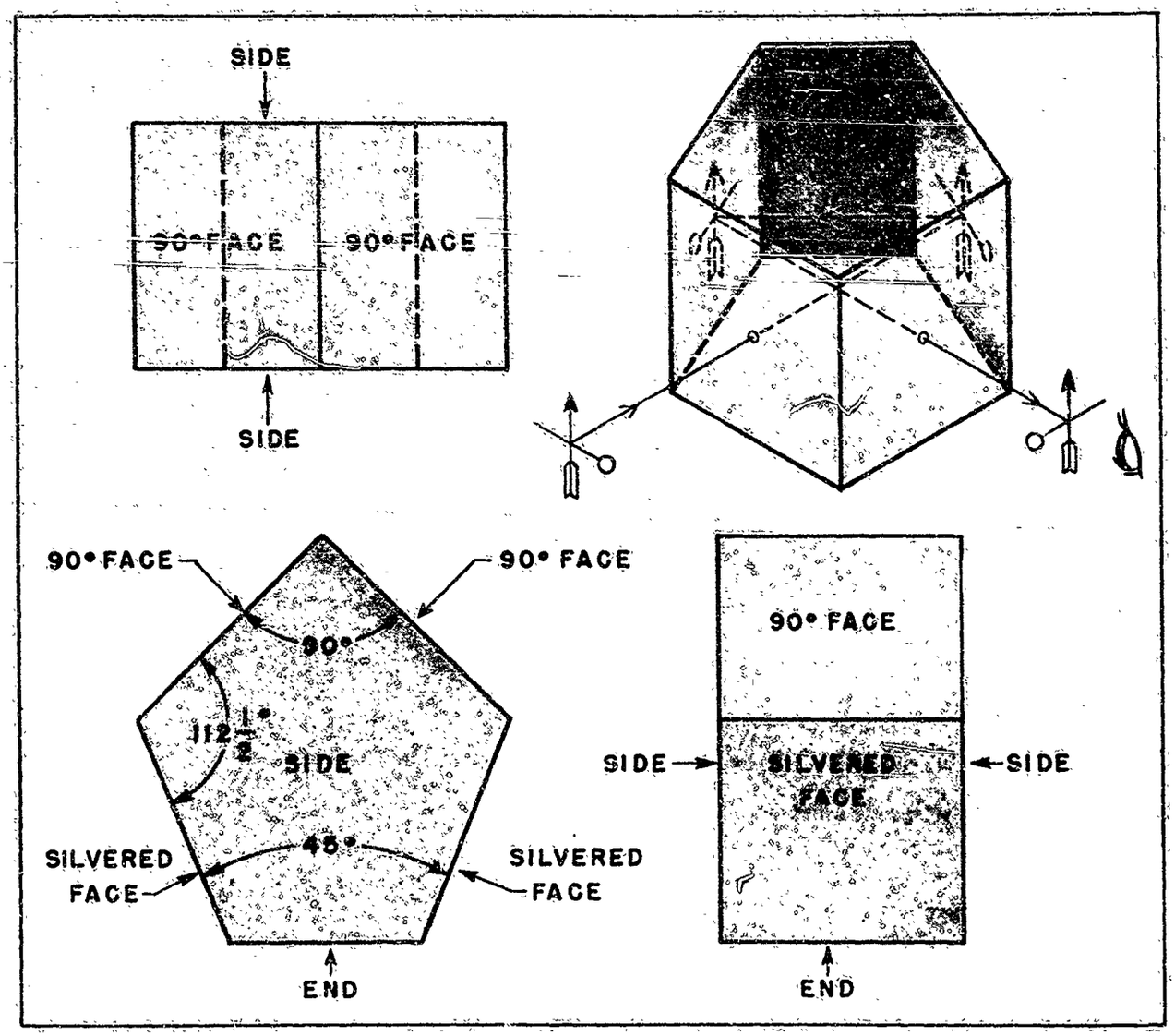

Figure 113.—Penta Prism.
Light Path Deviated 90°—Emergent Rays Deviated 90° from Incident Rays.

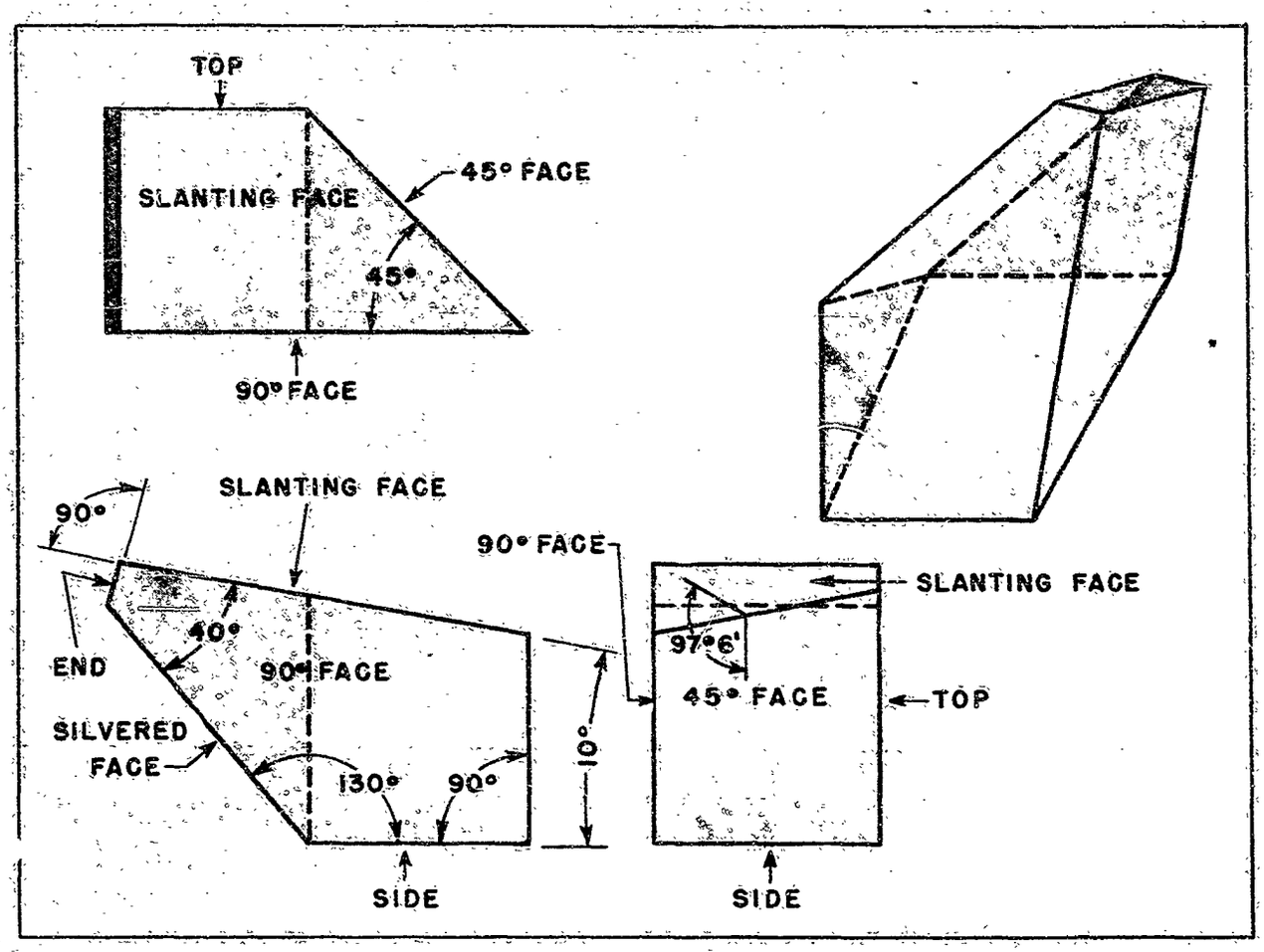

Figure 114.—Ocular Prism (Left) Used in Height Finder M1.

(filters which reduce the transmission of all colors of light equally) are used to reduce the intensity of the light as for instance, when viewing an aerial target in the immediate vicinity of the sun. Red orange filters are said to enhance the contrast of a ground target against an ordinary background. Red filters are used to observe the path of tracer shells. Yellow filters are useful in haze or mist.

Reticles.—A reticle is a glass plate located in a focal plane of the instrument, bearing on one of its surfaces a pattern, examples of which are shown in Figure 118.

These patterns generally consist of a series of etched lines and numerals containing an opaque substance which makes them appear black against an illuminated background in daylight and luminous when suitably illuminated at night.

Since the reticle lies in a focal plane the reticle pattern appears superimposed upon the target. Simple crosslines (Figure 118–G) are sufficient to establish a line of sight. Horizontal and vertical graduations are added to permit angular measurements and the vertical graduations are often calibrated to give different range settings.

The reticles used in present day fire control instruments are far more durable than the fine hair or spider web used in the past. Although they still may be used in certain commercial optical instruments (*e.g.*, surveying instruments), fine hair and spider web have not been used in fire control instruments for military purposes since long before the first World War. Reticle patterns are sometimes etched on a plano surface of a prism lying in the focal

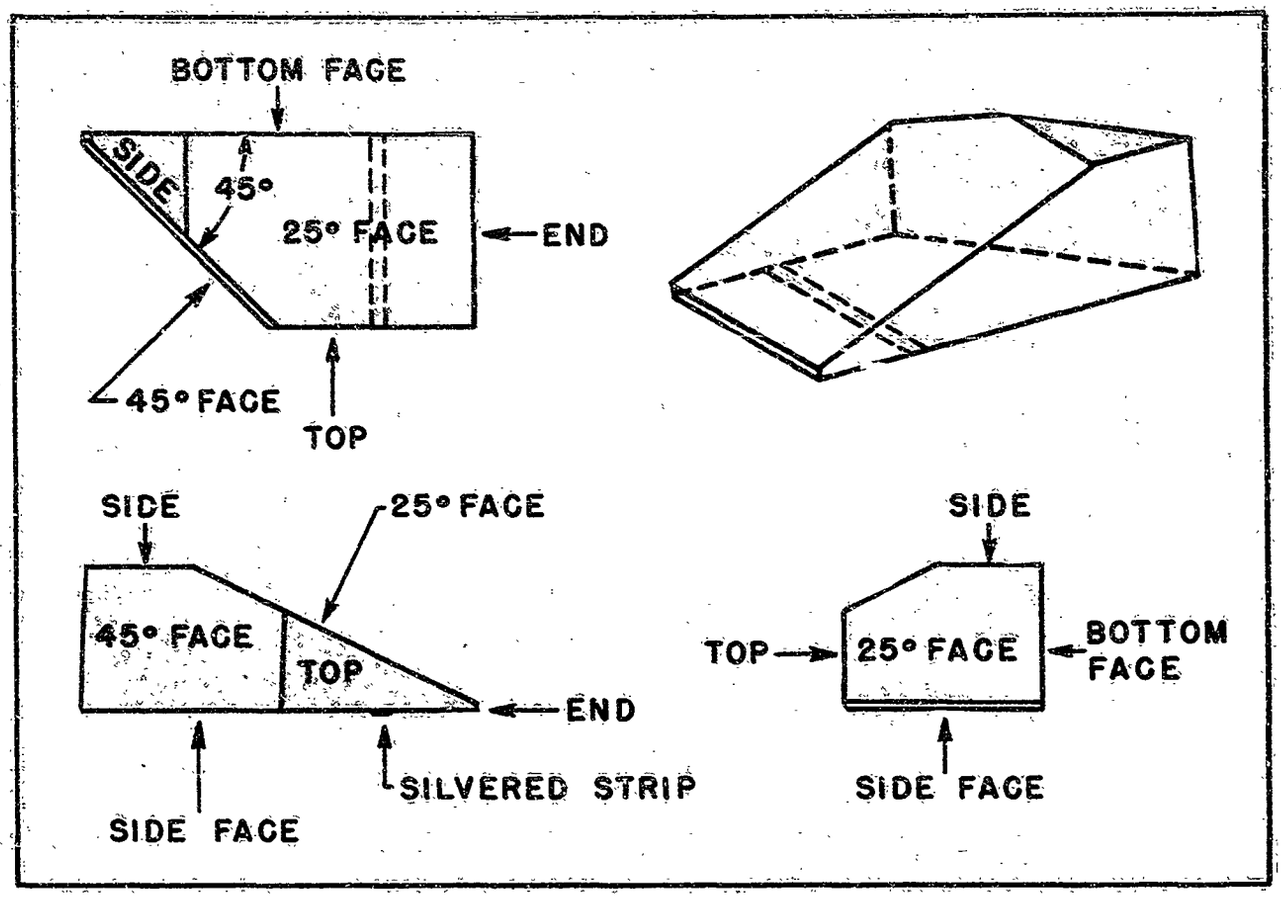

Figure 115.—Ocular "A" Prism Used in Small Range Finders.

plane. Besides etching, other methods may be employed to produce a reticle pattern (see Chapter 17).

The quality of the glass upon which the pattern is formed depends on the extent the pattern is to be magnified. Barium flint (type No. 584–460) is favored because of the ease with which it can be etched. Plate glass is cheaper but does not etch as well and its use is restricted to reticles with relatively large and simple patterns.

Defects in the polished surface of the reticle should not be visible in the assembled instruments since they distract the observer. Any imperfections are magnified since the pattern is viewed at the magnification of the eyepiece. When an erecting lens system of greater than one power is used and the reticle surface is located on the collective lens or on a disk at the focus of the objective, the reticle surface is subject to a total magnification equal to the product of the magnifications of the erecting system and the eyepiece.

The shape of the glass element bearing the pattern depends upon the design of the instrument into which it is to fit. Most reticles are circular, but some designs are of various shapes such as rectangular, square, or rectangular with one semicircular end (Figure 118–D).

Front Surface Mirrors.—Ordinary commercial mirrors have their reflective coating, generally silver, on their rear surfaces. Mirrors used in precision optical systems have their coatings on the front surface and are thus called 'front (or first) surface mirrors'. Only the front surface of these mirrors need be polished. Since the light does not pass through the glass, that portion of it which would normally be absorbed by the glass is retained and any danger of a 'double image' (reflecting from both front and back surfaces)

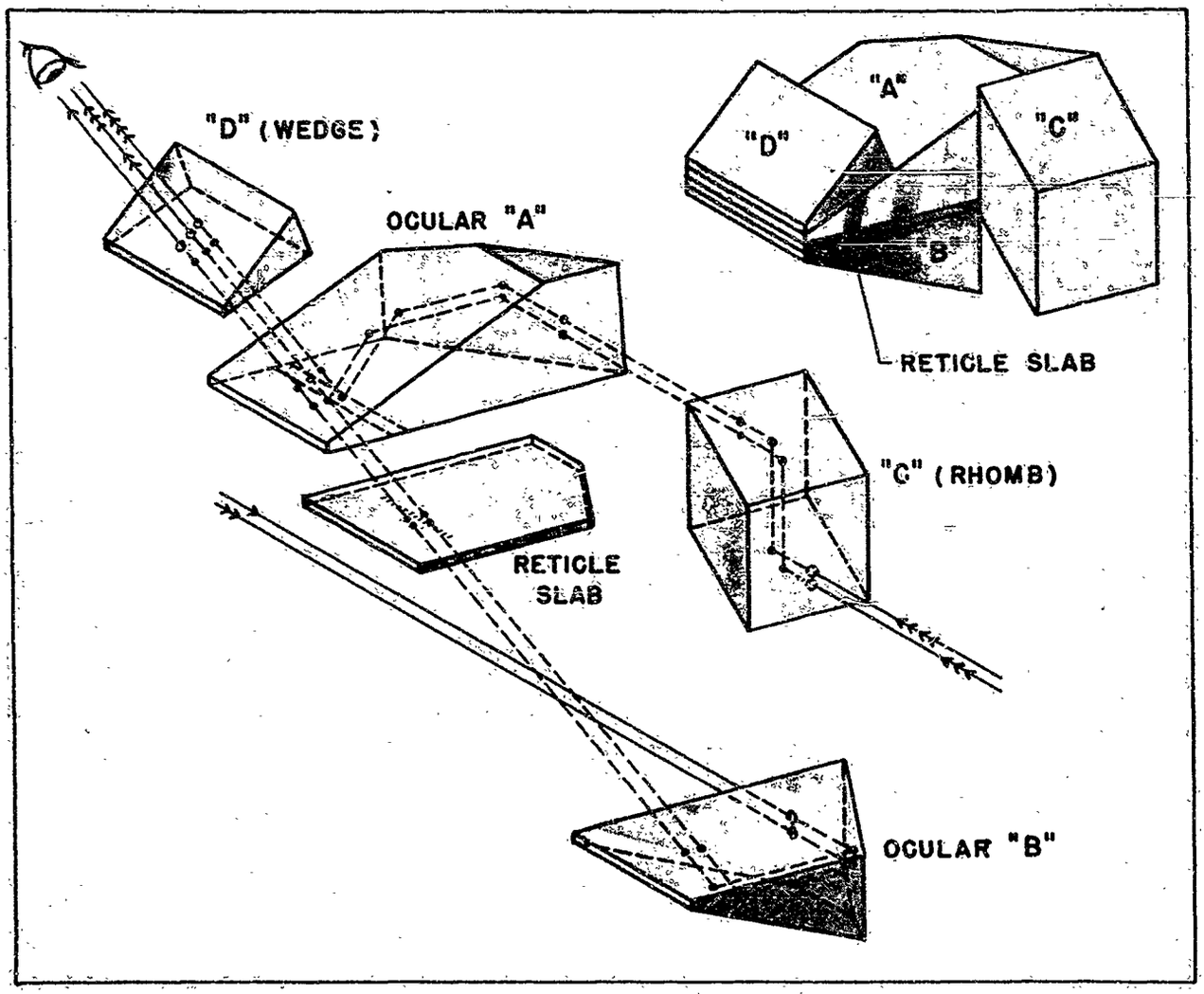

Figure 116.—Ocular Prism Assembly Used in Small Range Finders.
This assembly is included as part of the optical system shown in Figure 102.

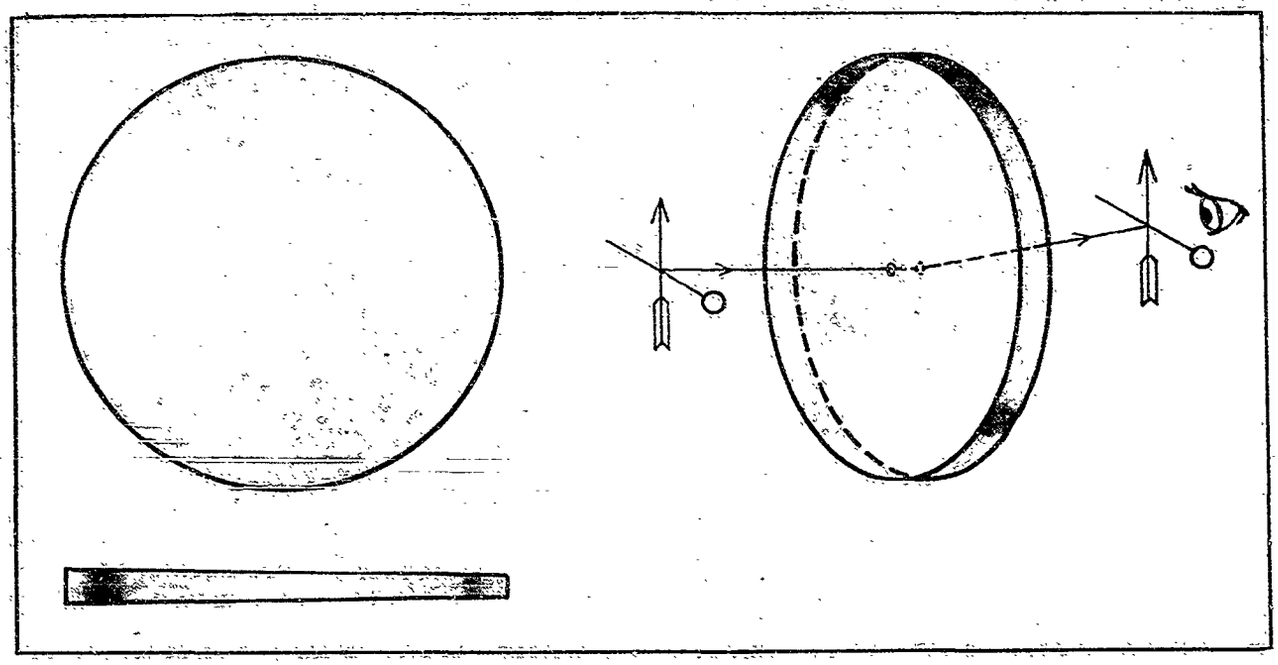

Figure 117.—Wedge, or Refracting Prism.

is eliminated. Aluminum, chromium, rhodium, and other metallic coatings which do not readily tarnish have replaced silver to a large extent.

LENSES

The lenses commonly used in fire control instruments are composed of one or more circular glass elements having two spherical, or one spherical and one plano, polished surfaces. Such an element when used alone is called a 'single' or 'simple lens' (Figure 103). 'Compound lenses' are formed by cementing together two or more simple lenses having a common radius of curvature on one surface.

A concave surface is one that is hollowed out like a bowl—the interior of a curved surface. A convex surface, the opposite of concave, is shaped like a mound or a section cut from a solid ball—the exterior of a curved surface.

Double-convex, plano-convex, or positive meniscus lenses (Figure 103), are called 'converging' lenses, because parallel rays of light which strike their surfaces are brought together at a point. Double-concave, plano-concave, and negative meniscus lenses are called 'divergent', because parallel rays of light that strike their surfaces diverge or spread apart like a megaphone.

Most convex lenses are made of crown glass, while concave lenses are generally made of flint glass.

A very few non-circular lenses are used and in some rather rare instances plastics are substituted for glass. Sometimes, to save space, a prism or a wedge may be made with one surface spherical. Lenses with one cylindrical surface, called 'astigmatizers', are sometimes used in range finders.

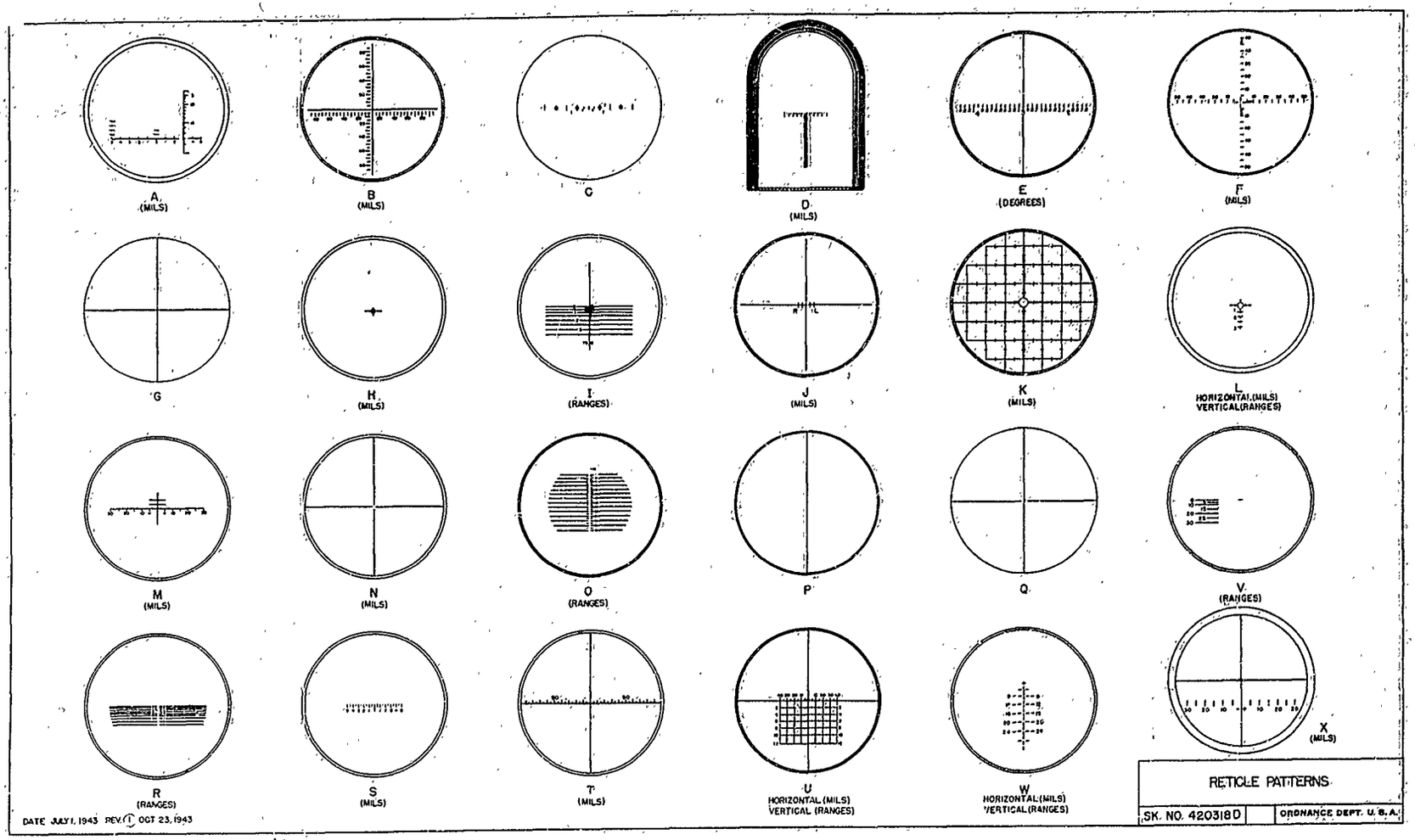

Figure 118.—Reticle Patterns.

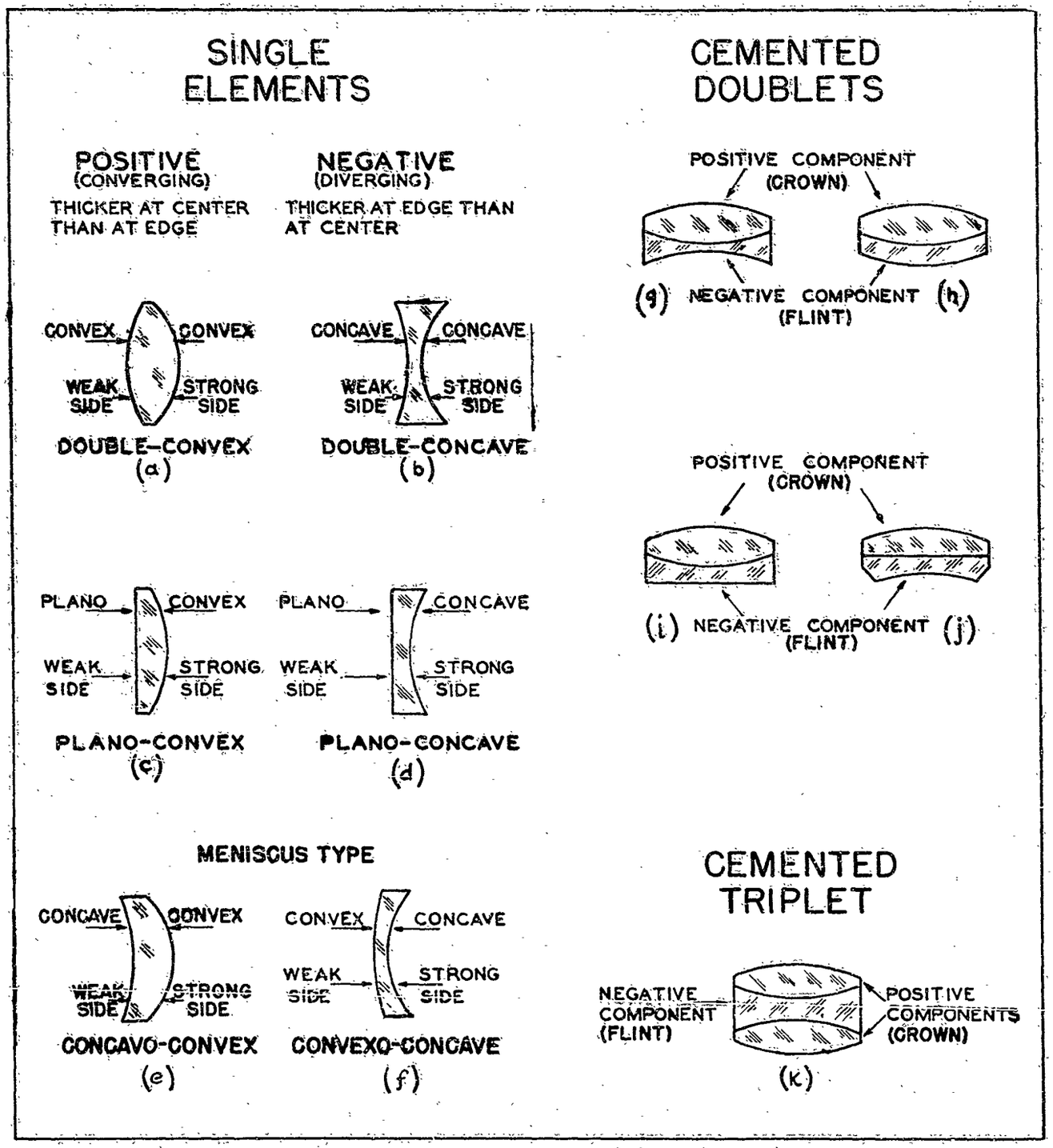

Figure 119.—Types of Lenses.

CHAPTER 2

INSPECTING OPTICAL GLASS

	Page No.
Optical Glass.	202
Slab Glass.	202
Inspecting Slab Glass.	202
1. Light Absorption.	202
2. Bubbles and Inclusions.	206
3. Striae.	208
Two Methods of Inspection for Striae.	209
(1) Dry Method.	209
(2) Immersion Method.	209
4. Index of Refraction and Dispersive Power.	209
Index of Refraction.	209
Dispersive Power.	209
Measuring the Refractive Index.	215
5. Strain.	217
Formed Blanks.	218
Molded, or Pressed Blanks (Pressings).	218
Cut Blanks.	218
Inspecting Formed Blanks.	218
1. Dimensions.	218
2. Bubbles and Inclusions.	220
3. Striae and Index of Refraction.	220
Striae.	220
Index of Refraction.	221
4. Strain.	221

This chapter describes laboratory methods of checking the optical characteristics and physical properties of different types of optical glass, and the principal defects that occur in its manufacture.

OPTICAL GLASS

Optical glass is of much better quality than ordinary window glass or bottle glass although, to the casual observer, they may appear to be similar. The basic constituents of all glass are the same, namely soda (*sodium carbonate*, Na_2CO_3), lime (*calcium carbonate*, $CaCO_3$), and sand (*silicon dioxide*, SiO_2). These may be mixed in various proportions and melted to form glass, the characteristics or properties of which (including the index of refraction and dispersive power), are dependent on the proportions of the constituents used. Since these proportions can be varied through a wide range, many different types of glass can be produced. Certain characteristics of the glass can be controlled further by dissolving oxides such as lead, barium, or boron in the mixture while it is in the molten state.

The 'index of refraction', or 'refractive index' as it is also called, is a measure of the change in direction of a light ray as it passes from one medium (usually air) to another (glass).

The 'index of refraction' of optical glass must be held to a specified value. Hence, it is necessary to control very carefully the proportions of raw materials going into the melt, the temperature of the furnace, and the time of melting. No matter how carefully a batch or melt of glass is prepared, much of it must be discarded and even the better portions of the melt may show various defects. These defects are illustrated in Chapter 24, *Inspecting Optical Elements*, and are called 'material defects'.

SLAB GLASS

'Slab glass' may be defined as square or rectangular pieces of glass of uniform thickness. Optical glass may be supplied by manufacturers either in this form, or as 'formed blanks' (see Figure 201). These formed blanks may be either 'molded' or 'cut' as discussed later in this chapter. The thickness of a slab is usually specified within a tolerance of +2 millimeters, while the length and width may each vary from 2 to 12 inches. The smallest opposite surfaces are usually polished to permit inspection.

INSPECTING SLAB GLASS

The inspection of slab optical glass consists of five different tests, as follows:

1. Light Absorption.
2. Bubbles and Inclusions.
3. Striae.
4. Index of Refraction and Dispersive Power.
5. Strain.

The glass is inspected by submitting it to tests which reveal defects in these same fields and which are used to determine how it conforms to the desired specifications in each. Particular tests that are used in each of these fields are discussed in detail in the following paragraphs.

1. Light Absorption

The brightness of an image seen through any instrument is affected by the light absorption of the glass used in it.

'Light absorption' of a piece of glass may be defined as the loss of light intensity observed in an emergent beam, in excess of the losses due to reflection at the glass surfaces. It is usually expressed in per cent per unit of length of path.

Light is lost in transmission in two ways as it passes through a piece of glass; first, by reflection at each surface and second, by absorption in the glass itself. Of these two losses, the first is considerably the larger. Losses due to reflection may be calculated with a reasonable degree of accuracy, but absorption losses must be determined by photometric measurement.

The light absorption of glass differs from one melt to another, variations being caused chiefly by the degree of purity of the components used in making the glass. A Martens type polarizing photometer (Figure 202) pointed at a white screen that is evenly illuminated is in common use for measuring the light

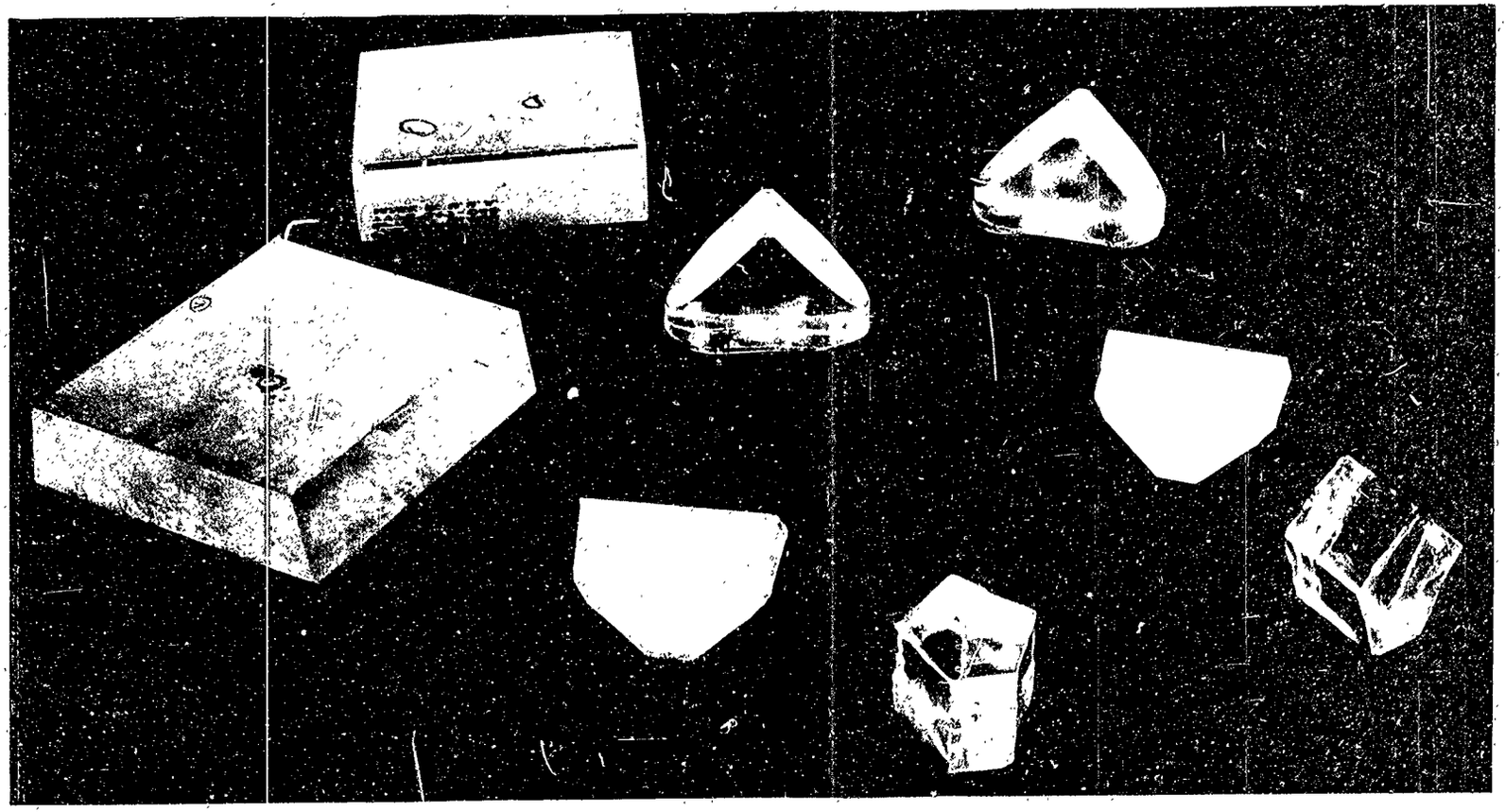

Figure 201.—Slab Glass and Formed Prism Blanks.

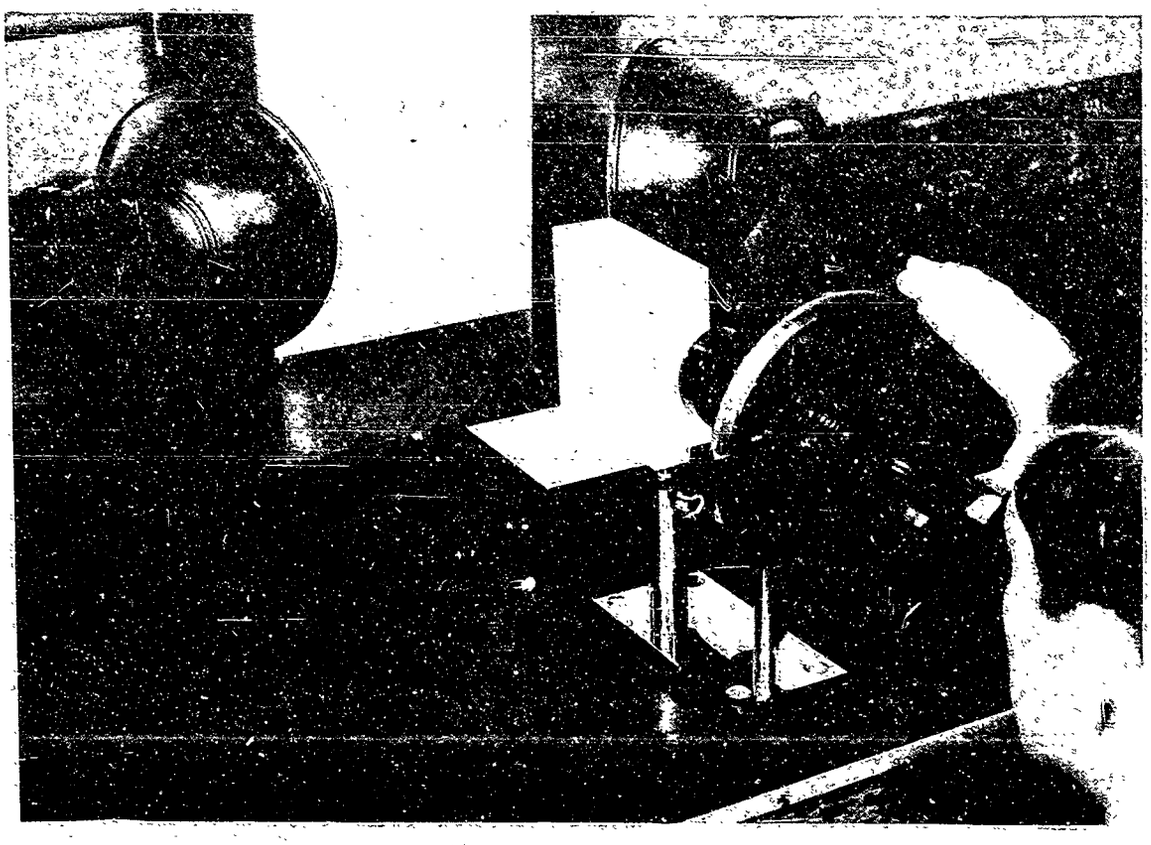

Figure 202.—Martens Type Polarizing Photometer Used for Measuring Light Absorption of Glass.

absorption of glass. In this instrument there are two apertures leading to one eyepiece and arranged in such a manner that the fields viewed through the apertures may be compared and their intensities of illumination varied. This variation is accomplished by rotating one of the two polarizers in the instrument with respect to the other. The instrument is calibrated by adjusting the polarizers until both fields appear to be of the same intensity when viewed through the eyepiece. No sample is used during this operation. When this has been done, the scales are adjusted in accordance with instructions furnished with the instrument until a reading of 100 is indicated.

The sample to be tested is prepared by grinding the two opposite ends approximately parallel (within 3°) and then polishing these surfaces. To test the sample, it is placed in front of one aperture. The intensity of the field viewed through this aperture will be reduced by the amount of light that the sample loses by reflection and absorption. The intensities of the fields are matched by rotating the polarizer. When this condition has been obtained, the percentage of light transmitted through the sample will be indicated by the index reading on the dial of the instrument.

The light absorption of one piece of glass per melt is generally considered as representative of the melt. If the piece is rejected, two more pieces are tested. If one of these is rejected, the whole melt is considered unsatisfactory.

Since the reading of the instrument when the glass is placed in front of one aperture is usually not the same as when the glass is placed in front of the other, the glass is placed first in front of one and the reading taken, then in front of the other and a second reading taken. The average of these two readings is used.

The amount of absorption per centimeter may be determined with reasonable accuracy by using the following formula:

$$(1-B)^L = \frac{P}{M} \qquad (1)$$

where B = the absorption per centimeter, expressed as a decimal.

L = the length of the sample between the polished surfaces, which is the distance the light travels through the sample, expressed in centimeters.

P = reading of the Martens type polarizing photometer, expressed in per cent.

M = a factor which corrects for losses due to reflection, and is dependent only upon the refractive index of the glass. (See Table, Figure 203.)

For the derivation of this formula, see Appendix B.

Expressed in logarithmic form, formula (1) becomes:

$$L \log (1-B) = \log P - \log M \qquad (2)$$

and, dividing through by L,

$$\log (1-B) = \frac{\log P - \log M}{L}$$

TABLE OF CORRECTION FACTORS *(M)* FOR DETERMINING LIGHT ABSORPTION *(B)*

n_D = index of refraction for sodium light	$M = (1-R)^2$ where R = fraction of light reflected by the glass	$\log M = \log (1-R)^2$
1.511	0.9189	9.96327–10
1.517	0.9174	9.96256–10
1.523	0.9158	9.96180–10
1.541	0.9115	9.95976–10
1.573	0.9033	9.95583–10
1.580	0.9015	9.95497–10
1.584	0.9004	9.95444–10
1.588	0.8995	9.95400–10
1.605	0.8951	9.95187–10
1.611	0.8934	9.95105–10
1.617	0.8919	9.95032–10
1.621	0.8909	9.94983–10
1.649	0.8836	9.94626–10
1.673	0.8772	9.94310–10
1.720	0.8647	9.93687–10

Figure 203.

The value of M may be obtained from the table given in Figure 203 if the index of refraction of sodium light, n_D in the sample of glass being tested, is known. The value of B obtained from formula (1) is converted to a percentage by multiplying by 100.

It should be noted that the corrections for losses by reflection on the polished surfaces are calculated rather than measured. Deterioration of a surface can alter the fraction of the light that is reflected sufficiently to cause a serious error. It is essential, therefore, that the glass surfaces of the sample be freshly polished.

Knowing the value of P and M, from which the value of $\frac{P}{M}$ can be obtained by division, the value of B may also be read directly from the chart shown in Figure 204, instead of calculating it by formula (1).

On this chart, the scale on the left represents the various values of $\frac{P}{M}$ expressed in percentages ranging from 80 to 100; the scale on the bottom, the length, L, of the sample of glass being tested, expressed in centimeters; and the sloping lines, the values of B, expressed in per cent of light absorption per centimeter. To illustrate the method of using the chart, assume that the value of $\frac{P}{M}$ for a certain sample of glass is 91.2 per cent, and that its length between the two polished surfaces is 7.3 centimeters. The horizontal dotted line starting at 91.2 per cent on the left-hand scale, intersects the vertical dotted line rising from the graduation on the bottom scale, that represents the length of 7.3 centimeters, at a point that lies midway between the sloping lines that represent the values of 1.2 per cent and 1.3 per cent for B. Moreover, it is about halfway between these two lines and, therefore, the value of B will be approximately 1.25 per cent. Similarly, if the length of the sample had been 7.4 centimeters, the point of intersection would be approximately one third of the distance from the 1.2 per cent line to the 1.3 per cent line and, therefore, the value of B would be approximately 1.23 per cent. While the value of B obtained from the chart is not quite as accurate as though it were obtained by direct calcula-

The amount of absorption per centimeter may be determined with reasonable accuracy by using the following formula:

$$(1-B)^L = \frac{P}{M} \qquad (1)$$

where B = the absorption per centimeter, expressed as a decimal.

L = the length of the sample between the polished surfaces, which is the distance the light travels through the sample, expressed in centimeters.

P = reading of the Martens type polarizing photometer, expressed in per cent.

M = a factor which corrects for losses due to reflection, and is dependent only upon the refractive index of the glass. (See Table, Figure 203.)

For the derivation of this formula, see Appendix B.

Expressed in logarithmic form, formula (1) becomes:

$$L \log (1-B) = \log P - \log M \qquad (2)$$

and, dividing through by L,

$$\log (1-B) = \frac{\log P - \log M}{L}$$

TABLE OF CORRECTION FACTORS *(M)* FOR DETERMINING LIGHT ABSORPTION *(B)*

n_D = index of refraction for sodium light	$M = (1-R)^2$ where R = fraction of light reflected by the glass	$\log M = \log (1-R)^2$
1.511	0.9189	9.96327–10
1.517	0.9174	9.96256–10
1.523	0.9158	9.96180–10
1.541	0.9115	9.95976–10
1.573	0.9033	9.95583–10
1.580	0.9015	9.95497–10
1.584	0.9004	9.95444–10
1.588	0.8995	9.95400–10
1.605	0.8951	9.95187–10
1.611	0.8934	9.95105–10
1.617	0.8919	9.95032–10
1.621	0.8909	9.94983–10
1.649	0.8836	9.94626–10
1.673	0.8772	9.94310–10
1.720	0.8647	9.93687–10

Figure 203.

The value of M may be obtained from the table given in Figure 203 if the index of refraction of sodium light, n_D in the sample of glass being tested, is known. The value of B obtained from formula (1) is converted to a percentage by multiplying by 100.

It should be noted that the corrections for losses by reflection on the polished surfaces are calculated rather than measured. Deterioration of a surface can alter the fraction of the light that is reflected sufficiently to cause a serious error. It is essential, therefore, that the glass surfaces of the sample be freshly polished.

Knowing the value of P and M, from which the value of $\frac{P}{M}$ can be obtained by division, the value of B may also be read directly from the chart shown in Figure 204, instead of calculating it by formula (1).

On this chart, the scale on the left represents the various values of $\frac{P}{M}$ expressed in percentages ranging from 80 to 100; the scale on the bottom, the length, L, of the sample of glass being tested, expressed in centimeters; and the sloping lines, the values of B, expressed in per cent of light absorption per centimeter. To illustrate the method of using the chart, assume that the value of $\frac{P}{M}$ for a certain sample of glass is 91.2 per cent, and that its length between the two polished surfaces is 7.3 centimeters. The horizontal dotted line starting at 91.2 per cent on the left-hand scale, intersects the vertical dotted line rising from the graduation on the bottom scale, that represents the length of 7.3 centimeters, at a point that lies midway between the sloping lines that represent the values of 1.2 per cent and 1.3 per cent for B. Moreover, it is about halfway between these two lines and, therefore, the value of B will be approximately 1.25 per cent. Similarly, if the length of the sample had been 7.4 centimeters, the point of intersection would be approximately one third of the distance from the 1.2 per cent line to the 1.3 per cent line and, therefore, the value of B would be approximately 1.23 per cent. While the value of B obtained from the chart is not quite as accurate as though it were obtained by direct calcula-

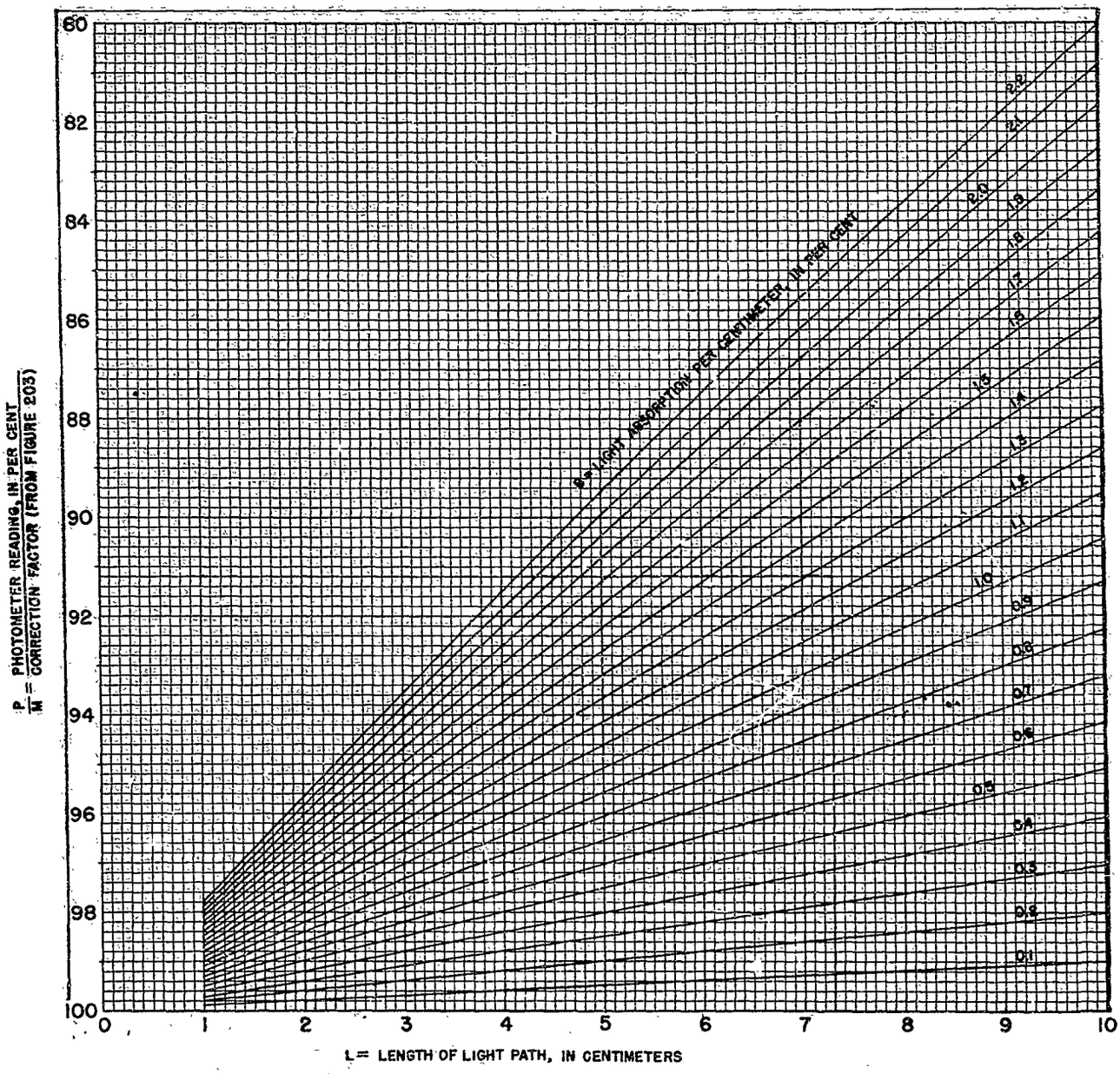

Figure 204.—Graphical Method of Determining Light Absorption *(B)*.

tion, the result is usually close enough for practical purposes.

2. Bubbles and Inclusions

Bubbles are formed in the glass when portions of gas or air are unable to rise to the surface and escape before the mixture cools. Gas may be given off during the melting process or air may be introduced into the liquid mass while it is being stirred. Bubbles may be removed during the stirring by a process called 'fining'. Stones, and other solid inclusions which occur, can be eliminated by care in working the glass melt.

Bubbles and inclusions of foreign matter are characterized by the fact that they reflect light which strikes them and thus are made easily visible by cross illumination. They look very similar to dust motes in a sunbeam. They interfere in an optical system in two ways. If they are out of the focal plane and are present in large numbers, they may permit less light to enter the eye through the system. If they are

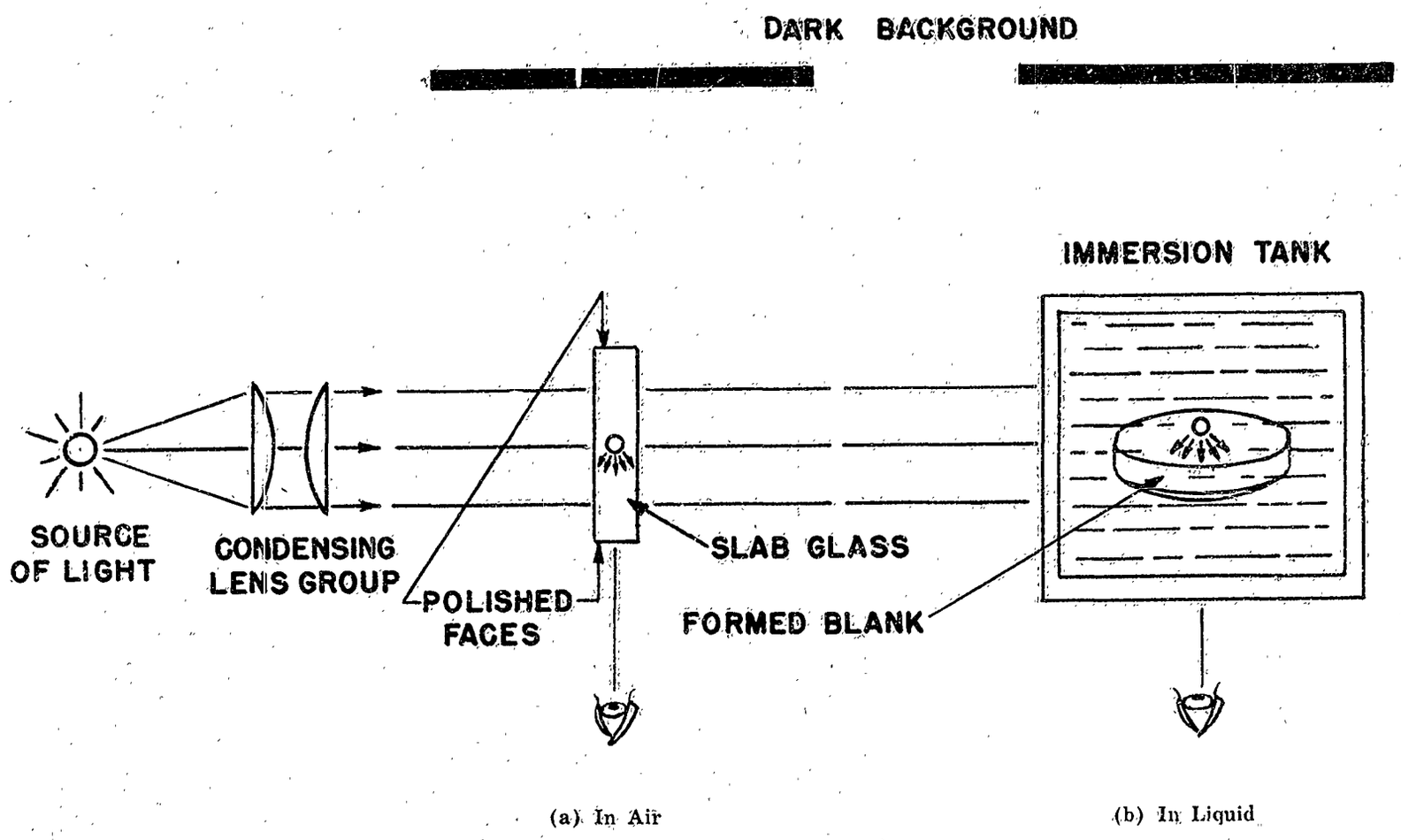

Figure 205.—Plan View of Cross-illumination Methods for Detecting Bubbles and Inclusions.

in or near the focal plane, they appear as solids and therefore blot out parts of the field.

Two methods are used for inspecting for the presence of bubbles and inclusions, both of which use cross illumination (see Figure 205). If the glass has two polished surfaces, this inspection can be done in the air, or if the surfaces are not polished, the sample must be held by tongs and immersed in a solution, the index of refraction of which is approximately the same as that of the glass. Any defects discovered are indicated on the glass with a china-marking pencil.

The solution is made by mixing 'Halowax' oil (with a refractive index of 1.634) and either Standard U. S. Light Mineral Oil (with a refractive index of 1.480) or monobromnaphthalene (with a refractive index of 1.655), in the proper proportions to produce the desired index of refraction.

The table (Figure 206) shows the part by volume, of U. S. P. Light Mineral Oil or monobromnaphthalene to be mixed with one part of Halowax oil to produce a mixture with the desired refractive index. The formula used in preparing this table is given in Appendix C.

In using the tables, the first two decimal places of the desired refractive index are given in the left hand column and the third decimal place is at the heads of the remaining columns marked .000 to .009 inclusive. The result will be found on the line to the right of the proper figures in the left hand column and in the vertical column headed by the third decimal figure.

3. Striae

The various components of glass become viscous fluids when they are melted and are not easy to stir. If the mass is not mixed thoroughly and uniformly, streaks or veins may occur which have a composition that is slightly different from the general mass. These veins are called 'striae' (pronounced *stri'ee*). Because the composition of the striae differs from that of the surrounding glass, the refractive index will differ also. The greater the difference in the refractive index, the more detrimental is the effect of the striae and the more easily they are detected.

If a beam of parallel rays passes through a piece of glass containing striae, the rays

TABLE OF VOLUME RATIOS FOR LIQUIDS USED TO OBTAIN A DESIRED REFRACTIVE INDEX

Refractive Index (n_D)	.000	.001	.002	.003	.004	.005	.006	.007	.008	.009
	Standard U. S. P. Light Mineral Oil ($n_D = 1.480$) at 25° C.									
1.48	—	153.00	76.00	50.33	37.50	29.50	24.67	21.00	18.25	16.11
1.49	14.40	13.00	11.83	10.84	10.00	9.27	8.63	8.06	7.56	7.11
1.50	6.70	6.33	6.00	5.70	5.42	5.16	4.92	4.70	4.50	4.31
1.51	4.13	3.97	3.81	3.67	3.53	3.40	3.28	3.16	3.05	2.95
1.52	2.85	2.76	2.67	2.58	2.50	2.42	2.35	2.28	2.21	2.14
1.53	2.08	2.02	1.96	1.91	1.85	1.80	1.75	1.70	1.66	1.61
1.54	1.57	1.52	1.48	1.44	1.41	1.37	1.33	1.30	1.26	1.23
1.55	1.20	1.17	1.14	1.11	1.08	1.05	1.03	1.00	.97	.95
1.56	.93	.90	.88	.86	.83	.81	.79	.77	.75	.73
1.57	.71	.69	.67	.66	.64	.62	.60	.59	.57	.56
1.58	.54	.52	.51	.49	.48	.47	.45	.44	.43	.41
1.59	.40	.39	.38	.36	.35	.34	.33	.32	.30	.29
1.60	.28	.27	.26	.25	.24	.23	.22	.21	.20	.19
1.61	.18	.18	.17	.16	.15	.14	.13	.12	.12	.11
1.62	.10	.09	.08	.08	.07	.06	.05	.05	.04	.03
1.63	.03	.02	.01	.01	—	—	—	—	—	—
	Monobromnaphthalene ($n_D = 1.655$) at 25° C.									
1.63	—	—	—	—	—	.05	.11	.17	.24	.32
1.64	2.50	2.00	1.63	1.33	1.10	.91	.75	.62	.50	.40
1.65	3.00	4.25	6.00	9.50	20.00	—	—	—	—	—

Mix One Part (by Volume) of Halowax Oil ($n_D = 1.634$) with Number of Parts Indicated Above for the Desired Solution.

Figure 206.

which encounter the striae have their direction changed while those passing between the striae continue, still parallel, in their original direction. When the resultant beam is examined, dark lines are noted corresponding to the position of the striae. It is evident, then, that striae in the glass of an optical system are harmful because of their light scattering effect which results in a loss of detail in the image.

The greatest care in making the glass serves only to reduce the number and degree of striae present, and they are the chief cause of rejection in optical glass.

An approved set of comparison samples containing examples of different degrees of striae is used as a guide by the inspector.

Two Methods of Inspection for Striae. *(1) Dry Method.*—The dry method is generally considered the more critical, and is used when the glass is polished on opposite surfaces which are reasonably flat and parallel. In this case a striaescope (Figure 207) is employed. The most comfortable position for inspection is found when the instrument is inclined at an angle of about 50° from the horizontal.

A diagram showing the operation of the striaescope is shown in Figure 208. The glass to be inspected is placed at P, between lens groups L_1 and L_2, with its polished surfaces normal to the line of sight. The deflection and shift of light caused by slight out-of-parallelism of the polished surfaces can be accommodated by the movable cross slit B which is adjusted until the plate P appears in half shadow. In this position the striae may readily be seen by tilting or moving the plate across the field.

(2) Immersion Method.—The immersion method is generally considered less critical than the dry method and is used when polished surfaces are not available. The inspection may be accomplished by using an apparatus as illustrated in Figures 209 and 210.

The refractive index of the immersion liquid mixture must be made exactly equal to that of the glass to be tested. A liquid with approximately the correct index is prepared using the liquid ratios shown in Figure 206. The glass is then placed in the tank of liquid in the striaescope in the position shown in Figure 211 and observed through the eyepiece. As the eye is moved to the left of the eyepoint of the instrument, the piece of glass being tested will appear dark on the left and bright on the right if the liquid is lower in refractive index than the glass; and conversely, the glass will appear bright on the left if the liquid is higher in refractive index than the glass. The index of the immersion liquid may be reduced by adding a small quantity of the liquid of a lower refractive index. And similarly, it may be increased by adding liquid of a higher refractive index. Thus an accurate match of liquid to glass is obtained. The inspection for striae may then proceed as in the dry method.

4. Index of Refraction and Dispersive Power

Index of Refraction.—Figure 212 shows the mechanism of refraction. RR′ is a light ray with perpendicular wave fronts a, b, c, d, e, etc. In the time that B reaches B′ on the surface of the glass, A goes to A′ inside the glass. The distance AA′ is less than BB′ because glass is optically denser than air, and

$$\frac{BB'}{AA'} = \frac{\text{speed of light in air}}{\text{speed of light in glass}}$$

From the geometry of the figure it follows that:

$$\frac{BB'}{AA'} = \frac{\sin i}{\sin r} = n = \text{index of refraction.} \quad (3)$$

The incident ray R, the normal NN′ to the surface AB′, and the refracted ray R′ all lie in the same plane (in this case, the plane of the paper).

Dispersive Power.—This same piece of glass will refract different colors to different degrees thus changing the value of r for the same value of i. It follows then that n, the refractive index, varies with the color of light used. To identify a type of glass, the n values for at least three colors are necessary. These colors are chosen from the red, the yellow, and the blue parts of the spectrum and are designated n_C, n_D, and n_F respectively. The value n_D when taken alone represents the average index of refraction for the glass. These three n values are combined to give an expression which is a measure of the dispersive power of the glass:

$$\text{Dispersive Power} = \frac{n_F - n_C}{n_D - 1}$$

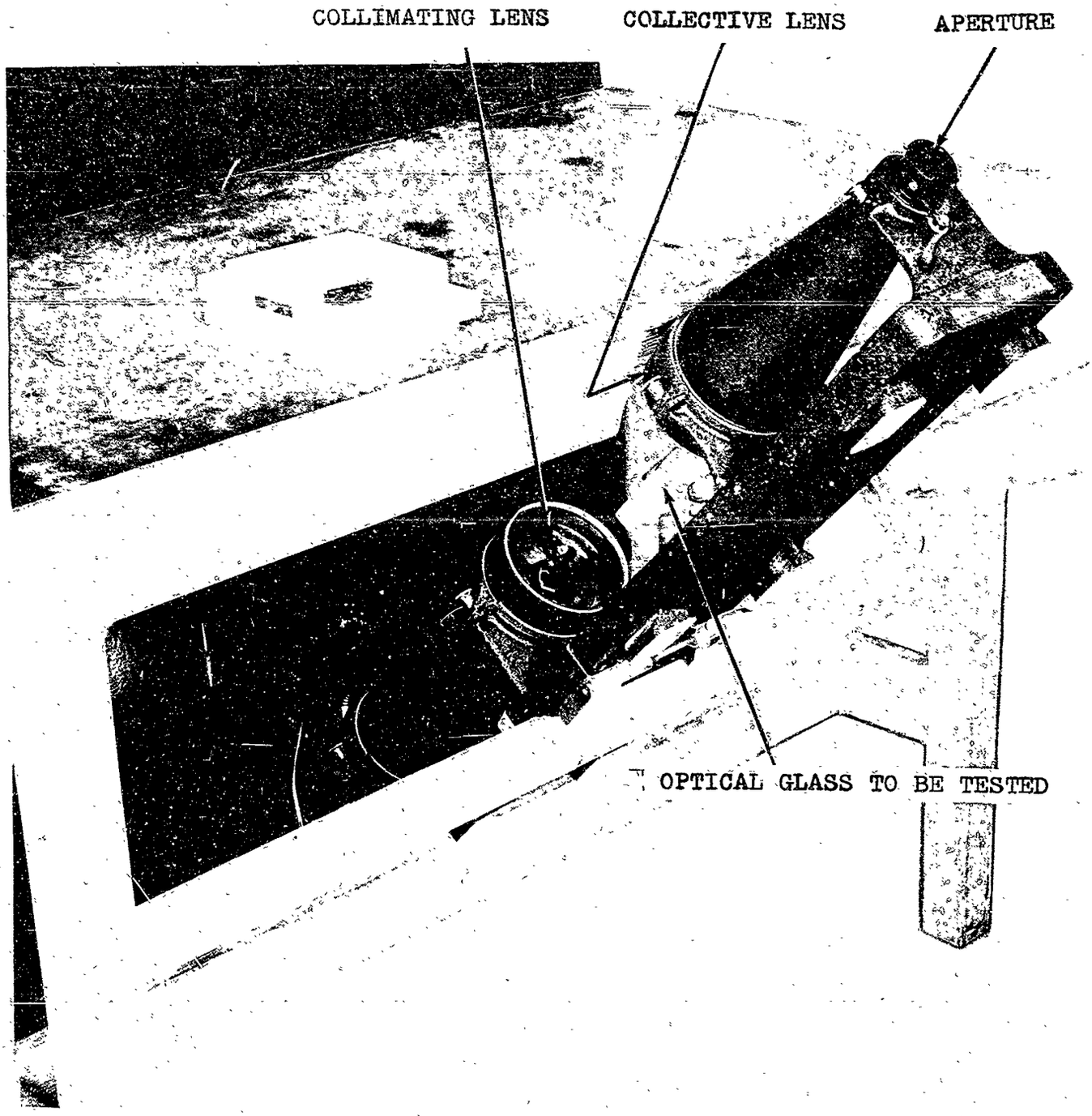

Figure 207.—Striaescope—Dry Method.

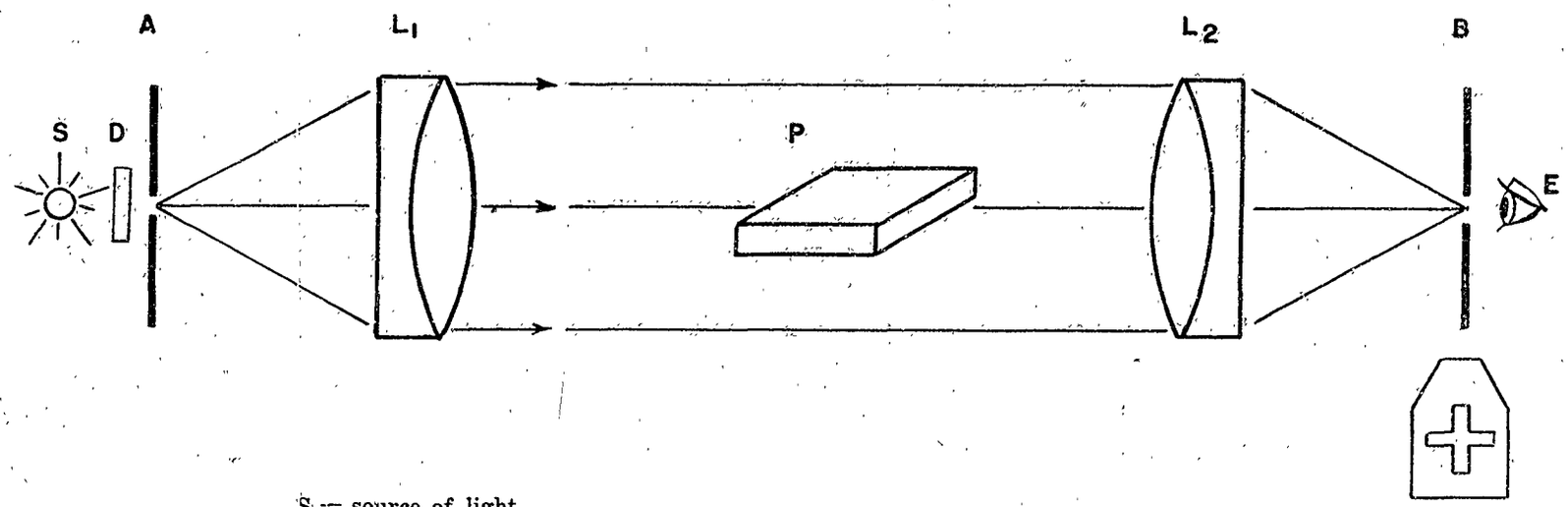

END VIEW OF CROSS SLIT, B

S = source of light
D = diffusing disk of fine-ground glass
A = pinhole aperture (½ mm. or smaller) at the rear focus of L_1
L_1 = collimating achromatic lens
L_2 = objective achromatic lens
P = plate of glass under observation
B = movable cross slit in the rear focal plane of L_2
E = position of observer's eye

Figure 208.—Optical System for Dry Method of Detecting Striae.

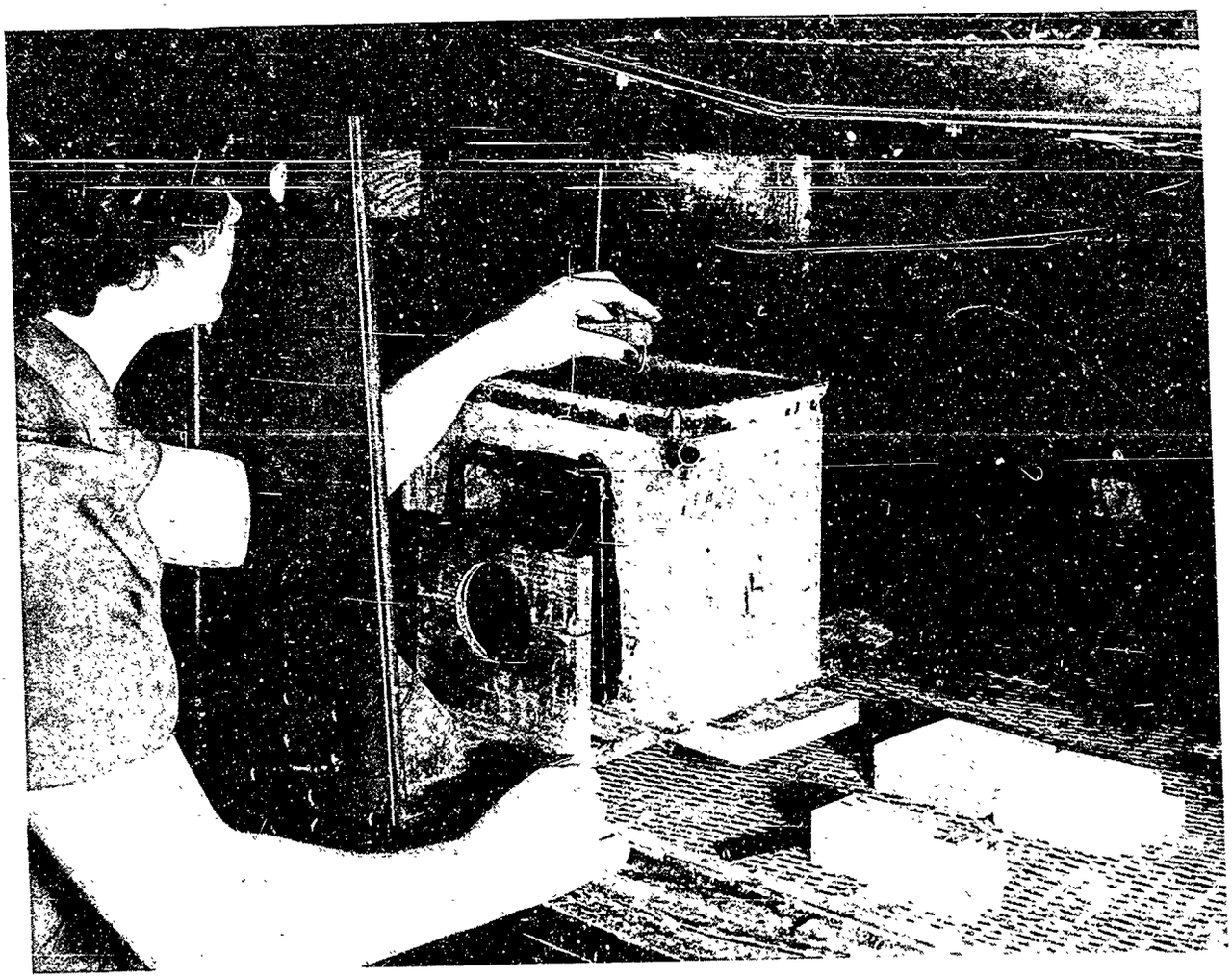

Figure 209.—Immersion Striaescope.

S = source of monochromatic light (*e.g.*, sodium)
A = pinhole aperture at the rear focus of L_1
L_1 = collimating lens group
W = tank with flat polished windows
P = plate of glass under observation
L_2 = objective lens group
E = position of observer's eye at the rear focal plane of L_2
M_1, M_2 = front surface aluminized mirrors giving a lateral displacement of approximately 15 inches

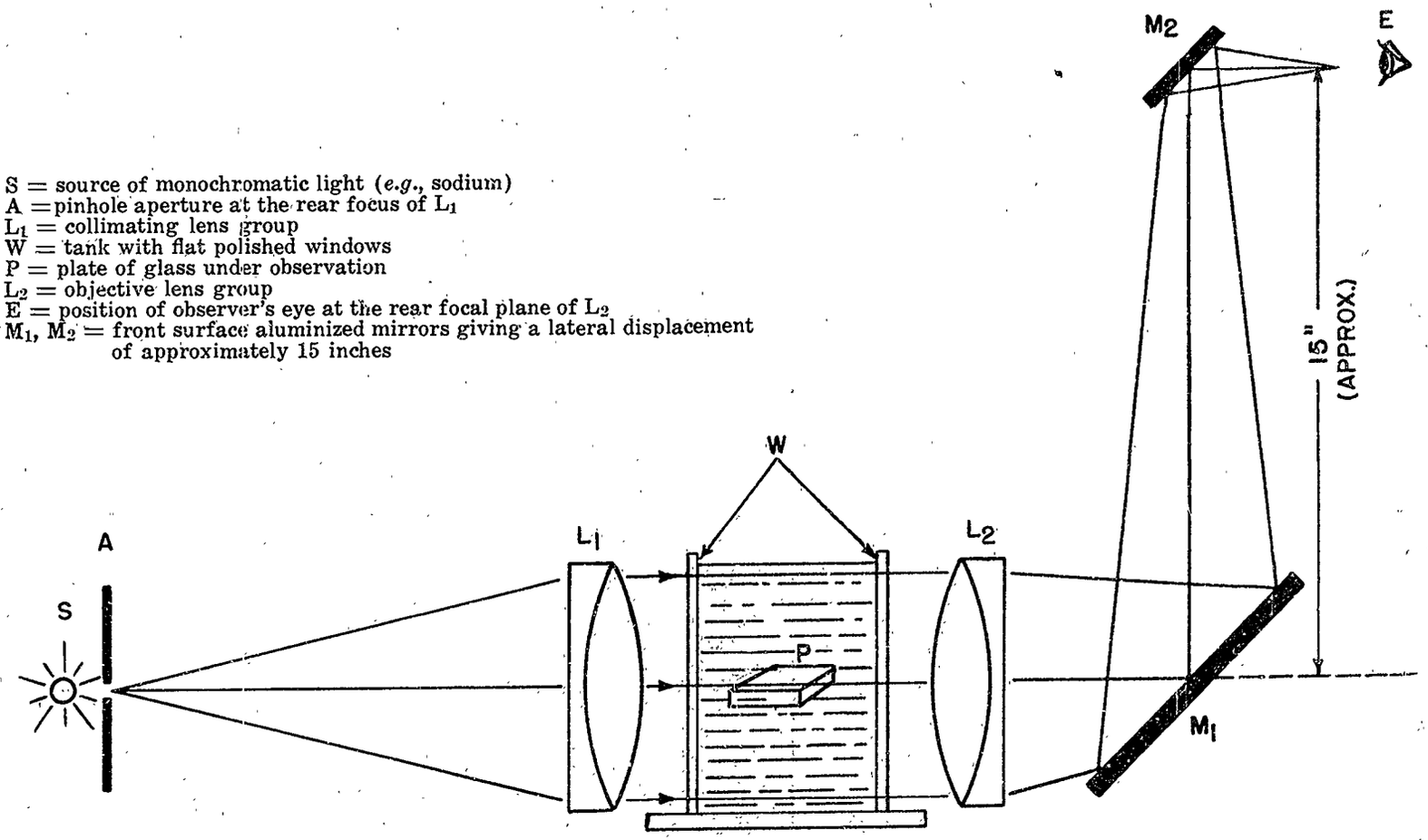

Figure 210.—Optical System for Immersion Striaescope.
The principle of operation is the same as that of the 'dry' striaescope (Figure 208).

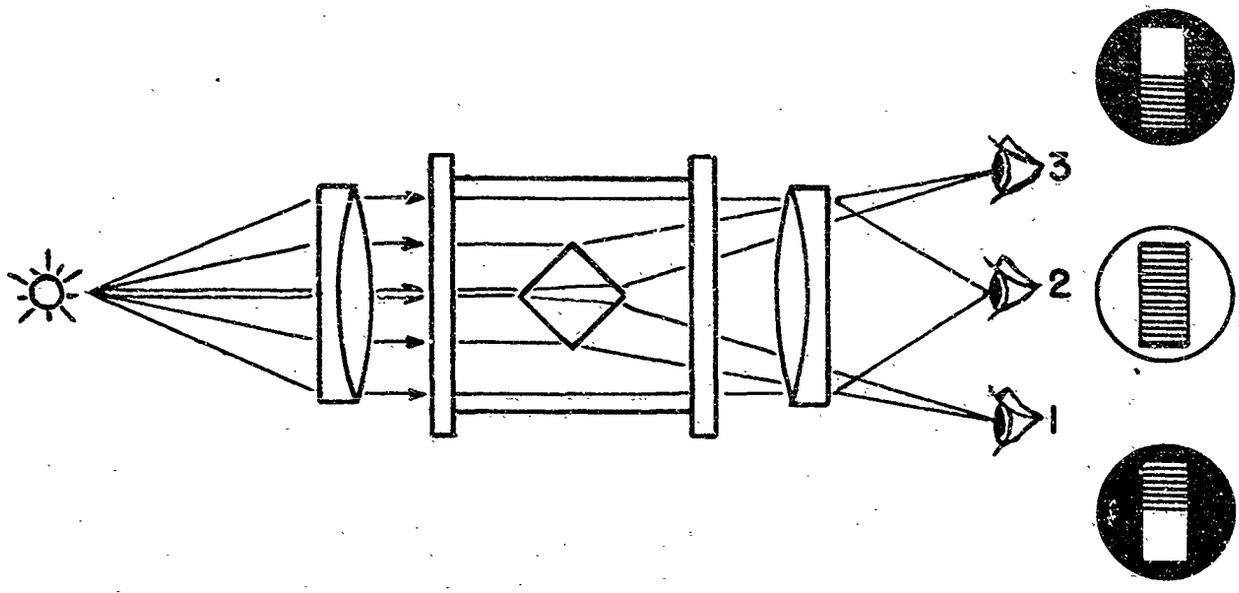

(a) Refractive Index of Liquid High

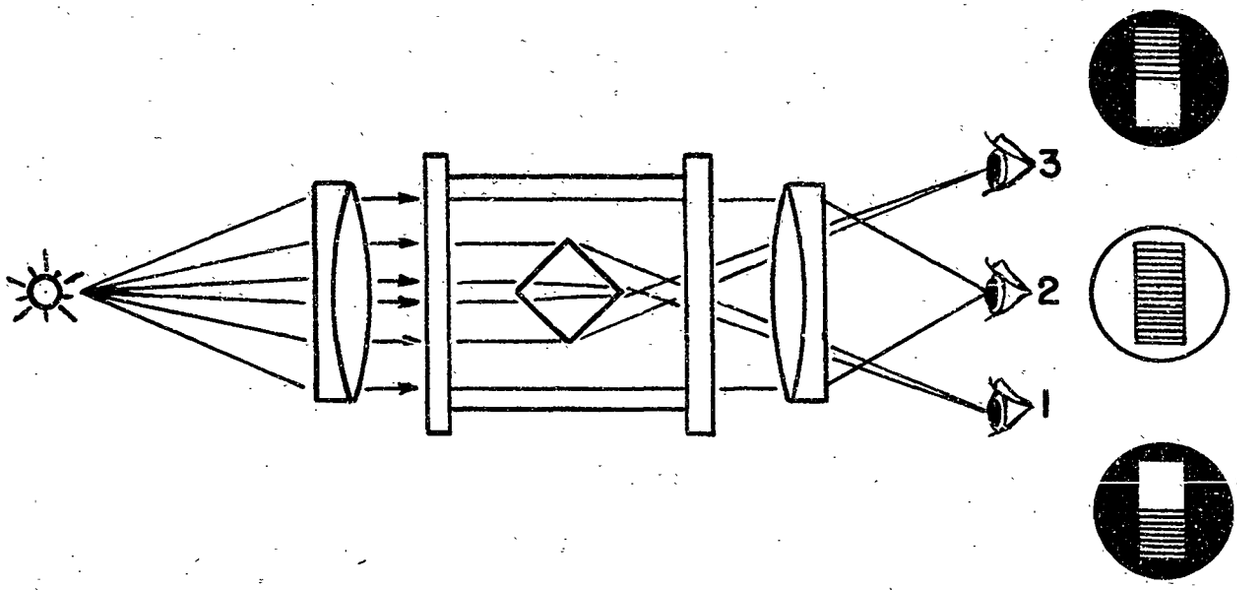

(b) Refractive Index of Liquid Low

Figure 211.—Plan View of Immersion Striaescope Used for Matching the Index of Refraction of a Glass Sample with a Liquid.

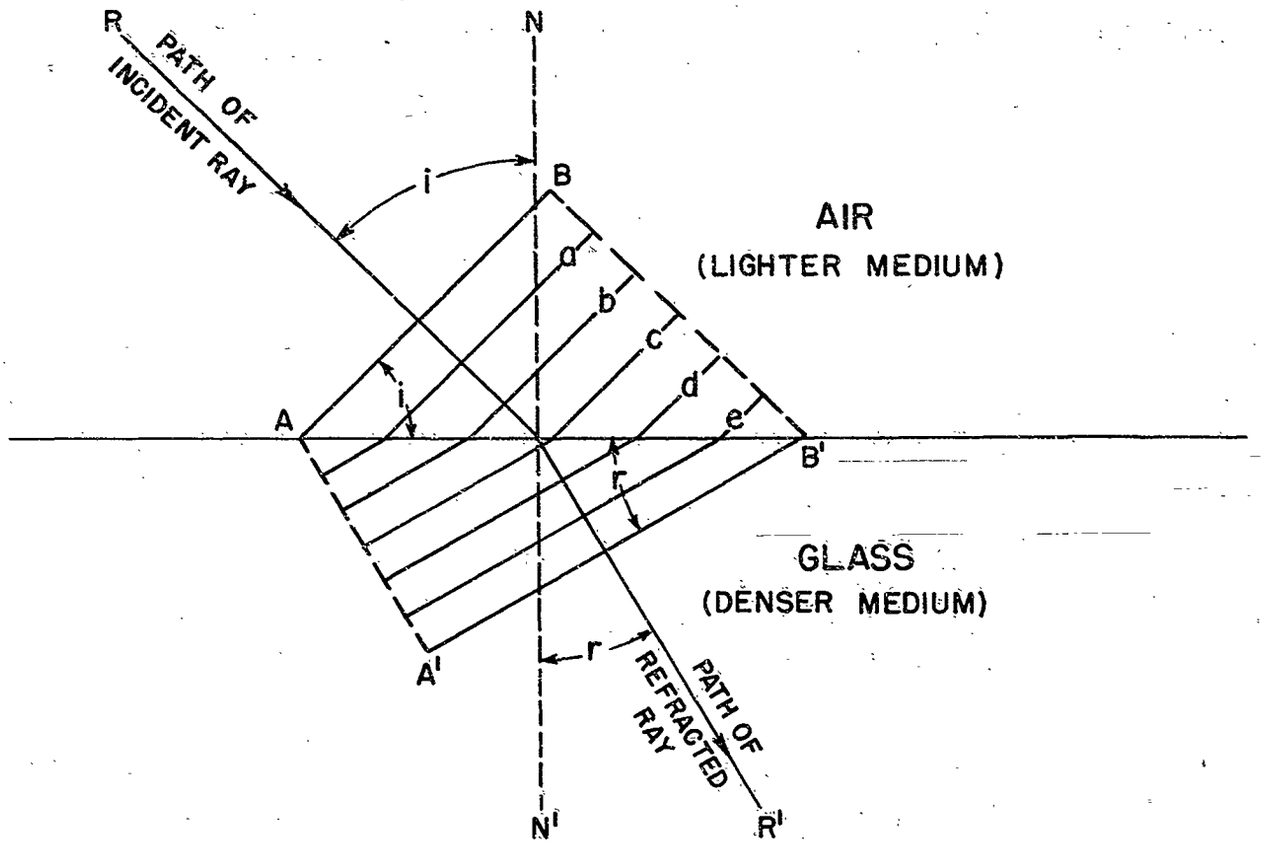

Figure 212.—Refraction of Light Rays.

The optical industry has adopted the symbol 'ν' (Greek letter *nu*) to denote the reciprocal of this quantity, or 'ν-value' of the glass, thus:

$$\nu = \frac{n_D - 1}{n_F - n_C} \qquad (4)$$

This ν-value is sometimes referred to as 'optical constringence', 'refraction efficiency', or 'Abbe's number'. For convenience in lettering and printing, the greek letter 'ν' is often replaced by the more familiar English letter 'V', so that the term 'V-value' may sometimes be found in optical literature or specifications.

To Measure the Refractive Index of a Piece of Glass.—The sample is prepared by cutting a corner of convenient size from the piece to be tested. One angle of this corner should be sharp and approximately 90° and one side adjacent to this angle must be polished.

The measurement of the refractive index for sodium light can be accomplished by several methods. An abbe refractometer, shown in Figure 213, using daylight for a light source but calibrated to read directly in values of n_D, gives results of sufficient accuracy with ease and speed. A set of tables is supplied with the instrument to make an approximate check of the ν-value possible. The ν-value, however, is usually certified by the manufacturer of the raw glass. An accurate check of the ν-value may be made on a Pulfrich type refractometer, Figure 214, in which monochromatic sources of light are used. The refractive indexes, from which ν can be obtained, are measured to within 0.00002 for the C (red) and F (blue) lines of hydrogen. One sample per melt is considered sufficient for a check of refractive index and dispersive power.

Figure 215 gives the n_D and ν-values, together with their respective tolerances, for various types of glass used in U. S. Army instruments.

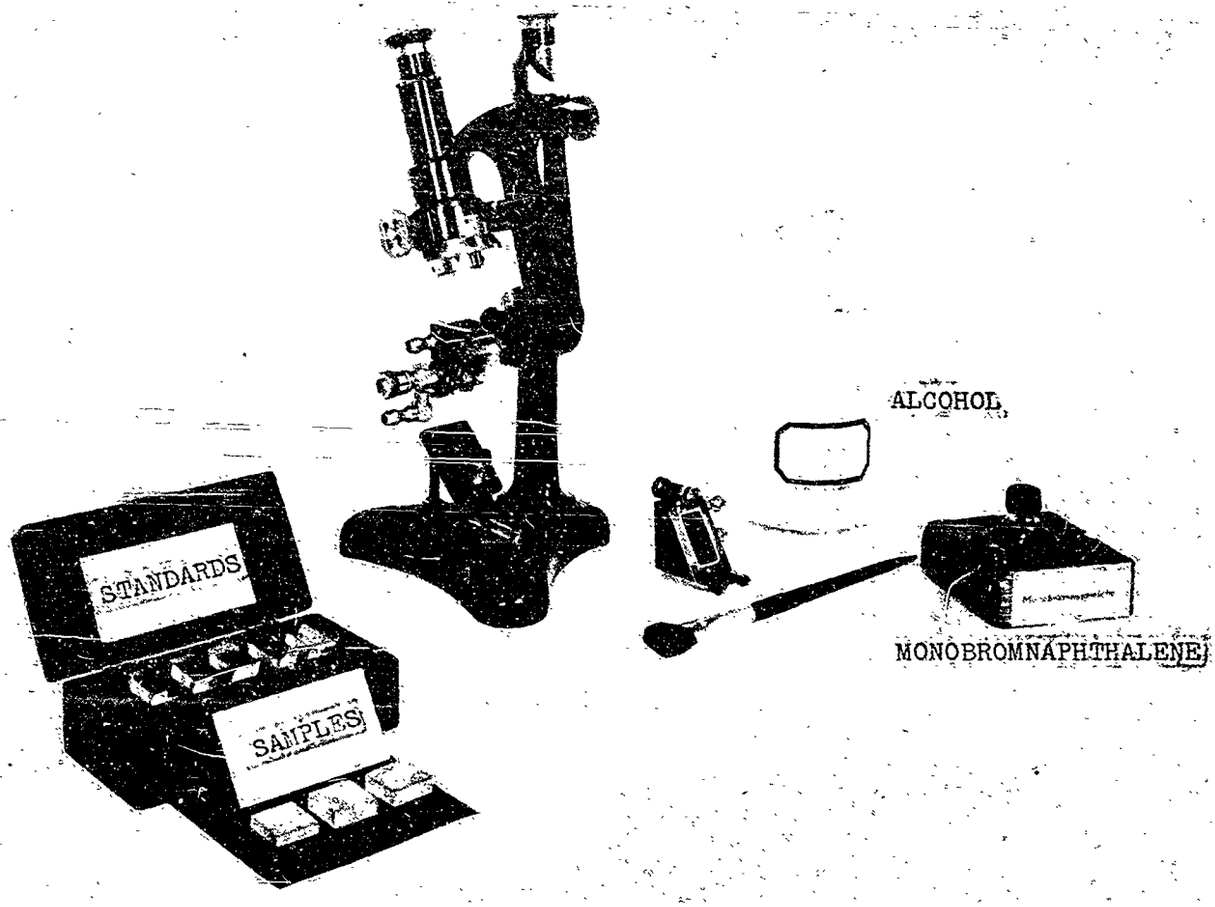

Figure 213.—Abbe Type Refractometer Used for Measuring Refractive Indexes.

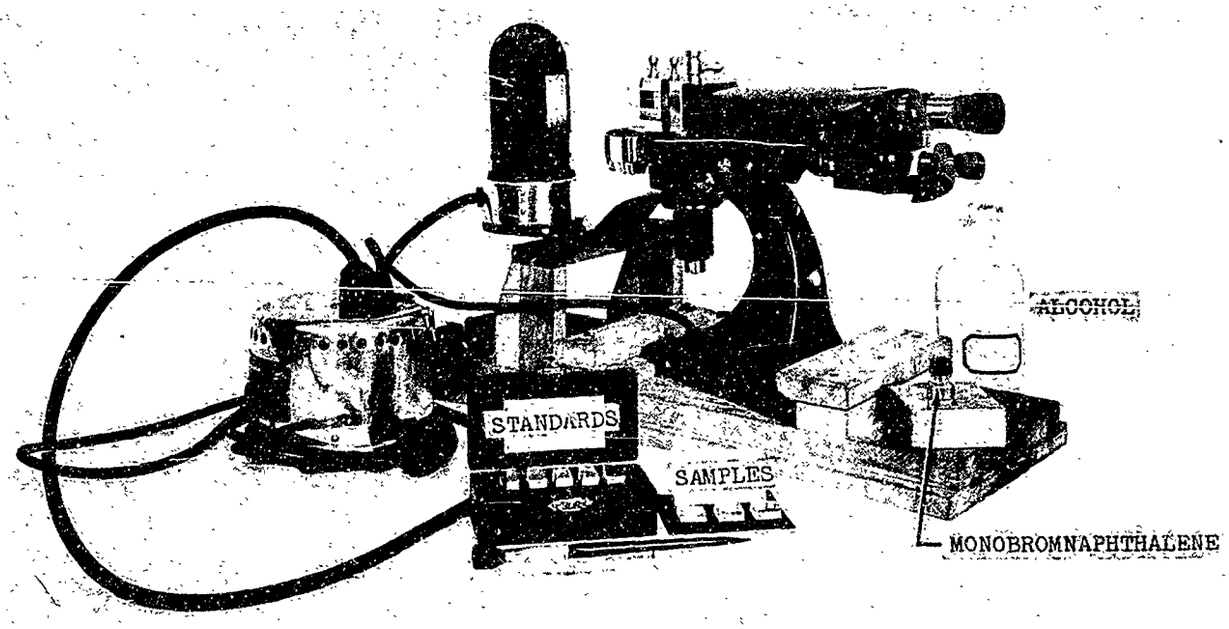

Figure 214.—Precision Pulfrich Refractometer Used for Measuring Dispersion (ν-value) as Well as Refractive Indexes (n).

The name of each type is taken from a particular characteristic of the chemical composition of the glass, and both the n_D and ν-values are required to identify each.

The second column shows the 'type numbers' which are made up of the first three digits to the right of the decimal point under the n_D value, and the ν-value without the decimal point. This number is marked on each piece of glass for a positive identification of the particular type of glass.

5. Strain

When glass is heated until it is soft and is then cooled quickly, the outside of the glass becomes solid before the inner portion has cooled. The solidified exterior hinders the contraction of the slower cooling inside portion, thereby setting up what is known as 'permanent' strain.

Such a condition may be eliminated by cooling the glass very slowly. This process is known to the optical glass manufacturer as 'fine annealing'. Fine annealing insures that the outer parts of the glass cool at nearly the same rate as the inner and thus have little effect on the contraction of the inside portion. Glass to be fabricated into optical elements must have been fine annealed, but even after fine annealing some residual strains may still be found.

Both tension and compression are found in strained glass. When light is transmitted through strained glass, rays traveling along a line of compression encounter more molecules per unit of length than rays traveling along a line of tension. The difference in the density of glass under compression and glass under tension causes a corresponding difference in refractive index and is called 'birefringence'. Such a difference in refractive index, caused by strain, is measured in units of length of path, and is expressed in millimicrons per centimeter.

Birefringence is easily detected by examining the glass between two polarizers which have been set previously 'at extinction' so that no light passes through the second polarizer. When polarized light is passed through strained glass, its character is changed so that it will not be extinguished as it passes through the second polarizer. As a result, an illuminated pattern is revealed.

TABLE OF OPTICAL CHARACTERISTICS FOR VARIOUS TYPES OF GLASS

Code Symbol	Type Number	Type	INDEX OF REFRACTION		RECIPROCAL OF DISPERSIVE POWER	
			n_D Value	Tolerance (plus or minus)	ν (nu) Value	Tolerance (plus or minus)
BSC–1	511–635	Borosilicate Crown	1.5110	0.0010	63.5	0.5
BSC–2	517–645	Borosilicate Crown	1.5170	0.0010	64.5	0.5
C–1	523–586	Crown	1.5230	0.0010	58.6	0.4
LBC–1	541–599	Light Barium Crown	1.5411	0.0010	59.9	0.5
LBC–2	573–574	Barium Crown	1.5725	0.0015	57.4	0.4
DBC–1	611–588	Dense Barium Crown	1.6110	0.0015	58.8	0.4
DBC–2	617–550	Dense Barium Crown	1.6170	0.0015	55.0	0.4
DBC–3	611–572	Dense Barium Crown	1.6109	0.0015	57.2	0.4
LBF–1	588–534	Light Barium Flint	1.5880	0.0015	53.4	0.4
BF–1	584–460	Barium Flint	1.5838	0.0015	46.0	0.3
BF–2	605–436	Barium Flint	1.6053	0.0015	43.6	0.3
LF–2	580–410	Light Flint	1.5795	0.0015	41.0	0.3
DF–1	605–380	Dense Flint	1.6050	0.0015	38.0	0.3
DF–2	617–366	Dense Flint	1.6170	0.0015	36.6	0.3
DF–3	621–362	Dense Flint	1.6210	0.0015	36.2	0.3
EDF–1	649–338	Extra Dense Flint	1.6490	0.0015	33.8	0.3
EDF–2	673–322	Extra Dense Flint	1.6725	0.0015	32.2	0.3
EDF–2	720–293	Extra Dense Flint	1.7200	0.0015	29.3	0.3

Figure 215.

To detect a slight strain, the test can be made more critical by placing a birefringent crystal, known as a 'first order red retardation plate' between the polarizers. This causes the strain pattern to appear in differing colors rather than in slightly different shades of gray.

Figure 216 shows a commercial polariscope with an analyzer and with the polarizer set for extinction. The glass to be tested is polished on two opposite surfaces, but not necessarily to a high degree, and is placed on the ground-glass stage of the instrument with a polished surface down. The birefringent pattern can then be seen in the analyzer.

Strain is of two types, symmetrical and unsymmetrical. The harmful effect caused by symmetrical strain is not as great as that caused by unsymmetrical strain. For this reason a limited amount of symmetrical strain is usually permissible. The amount of strain is determined by comparing the pattern in the glass as shown in the analyzer with the patterns in standard disks of known strain or birefringence. Thus, if the sample shows a color between those of the standard disks of 40 and of 50 millimicrons, the average of 45 millimicrons may be assumed to be the strain. The value of the total strain, thus determined, divided by the distance the light traveled in passing through the glass sample, expressed in centimeters, gives the strain in millimicrons per centimeter. The usual tolerance for symmetrical strain is 10 (or less) millimicrons per centimeter. For unsymmetrical strain the usual tolerance is 5 millimicrons per centimeter.

FORMED BLANKS

A 'formed blank' is a piece of optical glass of the same general shape as the finished element which is to be made from it, but is larger by the amount of glass that is required for processing. There are two general methods employed in the manufacture of formed blanks.

1. Molded, or Pressed Blanks (Pressings).—In this more common method, the glass is heated until it is plastic enough to be molded or pressed into shape. The piece of glass from which such a pressing is made may be square or any odd shape (see Figure 201), but it must be of the correct weight.

2. Cut Blanks.—The other method usually starts with the glass in slab form of the required thickness. The blanks are sawed out of the slab without recourse to heat or plastic flow of the glass. This method is commonly used in making the larger sizes of prisms.

Since the formed blank has nearly the size and shape of the finished element, there is a saving in material, as well as labor in the optical shop. However, the blanks must be handled carefully to prevent damage, since even small chips may not be removed in the processing.

INSPECTING FORMED BLANKS

The inspection of formed blanks consists of four different tests, as follows:

1. Dimensions.
2. Bubbles and Inclusions.
3. Striae and Index of Refraction.
4. Strain.

1. Dimensions

Bearing in mind that the blank is of nearly the size it will be when finished, a careful check must be made to insure that there is enough glass in the blank to permit sufficient processing to acquire the exact shape, size, and polish prescribed for the finished element. The thickness of glass ground from each surface depends on the quality of the surfaces of the blank and the processing methods used. The normal allowance indicated on drawings for formed blanks is about 0.060 inch per surface. When a drawing of the formed blank is not available, the blank dimensions must be calculated from a drawing of the finished element by the manufacturer of the formed blanks. A table giving instructions for these calculations is included in the U. S. Army Specification No. 51–70–3B for formed blanks. The dimensions calculated from this table do not necessarily coincide with those resulting from allowing 0.060 inch per surface and therefore acceptance must be based on whichever method the manufacturer of the blanks used. The dimensions given on drawings for formed blanks are usually specified with tolerances of ± 0.01 inch or equivalent. The measurements may be taken with either

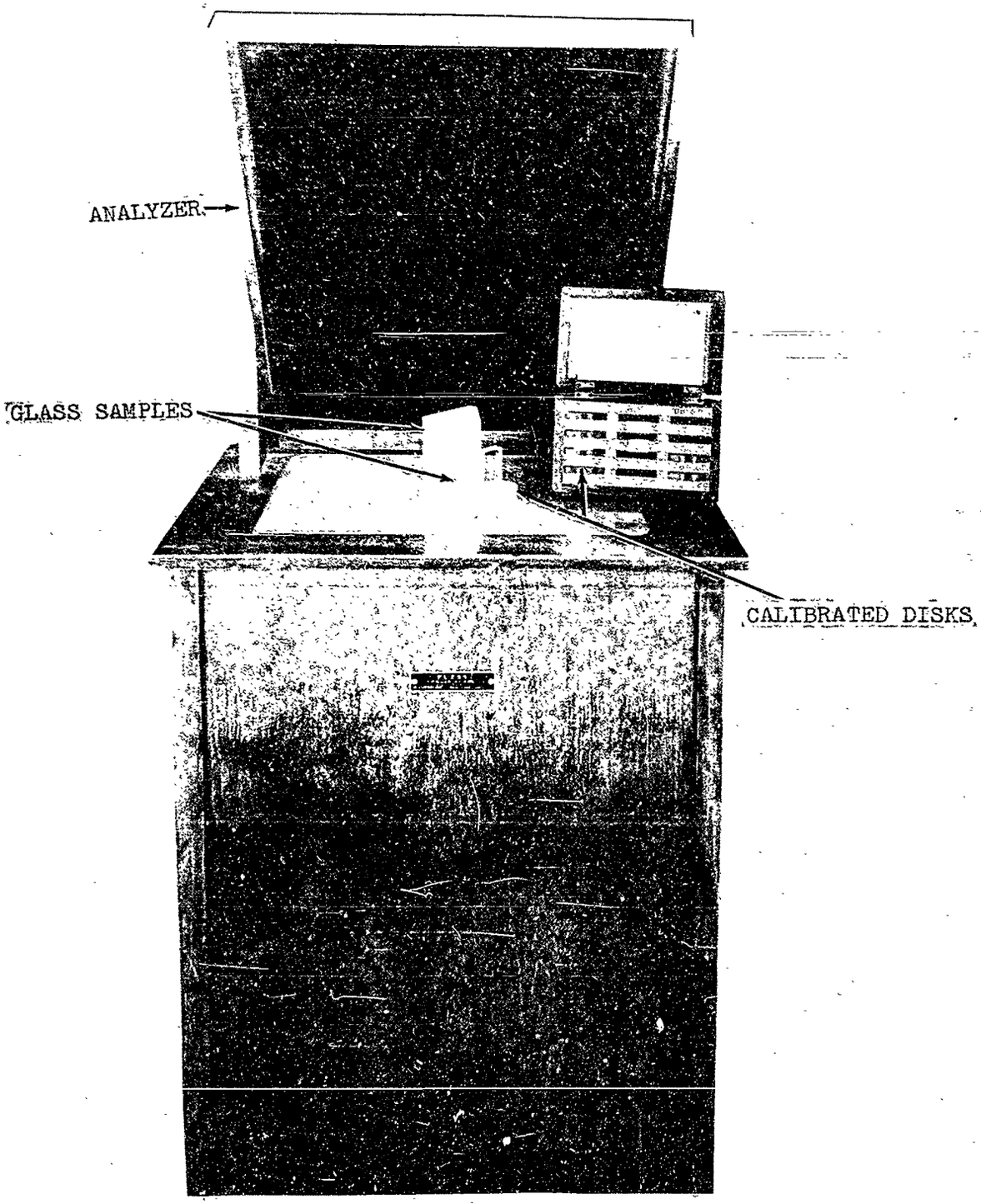

Figure 216.—Polariscope Used for Measuring Strain.

a scale or a dial gage. When the blanks are made by molding or pressing, the mold fixes all dimensions except the one which varies with the weight of glass used. In the case of lens blanks, the center thickness is the variable dimension while the diameter is nearly constant. With molded or pressed blanks, the variable dimension is easily recognized by measuring all dimensions on a few blanks; whereas, with cut blanks all dimensions are considered variable.

The measurement of surface curvature on formed blanks requires a radius gage. The use of radius gages is discussed in Chapter 7.

2. Bubbles and Inclusions

The inspection for material defects such as bubbles and inclusions (folds, feathers, stones, talc, etc.), is accomplished by use of cross illumination of the blank (see Figure 205(b)) while it is immersed in a liquid of suitable refractive index. The adverse effect of the various material defects, visible by cross illumination, on the performance of an optical element is determined by its place in the optical system, *i.e.*, its function in the instrument. This is explained in Chapter 24.

Folds, chips, fractures, or small bubbles which will be removed in subsequent processing are not cause for rejection. The usual practice is to permit such defects to a depth of one half the thickness of glass allowed for grinding on the surface. A 10-power microscope equipped with a calibrated reticle is used for measuring the diameter of bubbles and depth of folds or chips. This is done by immersing the blank in a tank of liquid, the refractive index of which matches that of the blank, and focusing the microscope on the defect under cross illumination. A bubble is easily detected in this manner. A white diffusing background is then placed behind the tank to outline the edges of the bubble more clearly. It is important to measure the projection of the bubble in the blank on a plane perpendicular to the light path in the finished element. When such projection of a bubble is not circular, the mean diameter is measured.

3. Striae and Index of Refraction

Striae.—The technique of inspecting formed blanks for striae is the same as the immersion method already described for slab glass, except that the orientation of striae in formed blanks must be considered. In many elements for the less critical optical systems, the use of glass containing a considerable amount of striae is permitted, provided that the striae are oriented normally to the light path. The orientation is fixed during the forming of the blank and therefore must be checked. In rolled glass, for example, the striae are oriented in sheets parallel to the rolled faces of the glass. After polishing, it can be seen that the striae are invisible when looking through the rolled faces but are easily visible through the edges of the glass. Rolled glass may be used for lenses when the plane of the striae extends through the edges of the lens. The diagrams in Figure 217 show the orientation of striae in various shaped pressings made of rolled glass.

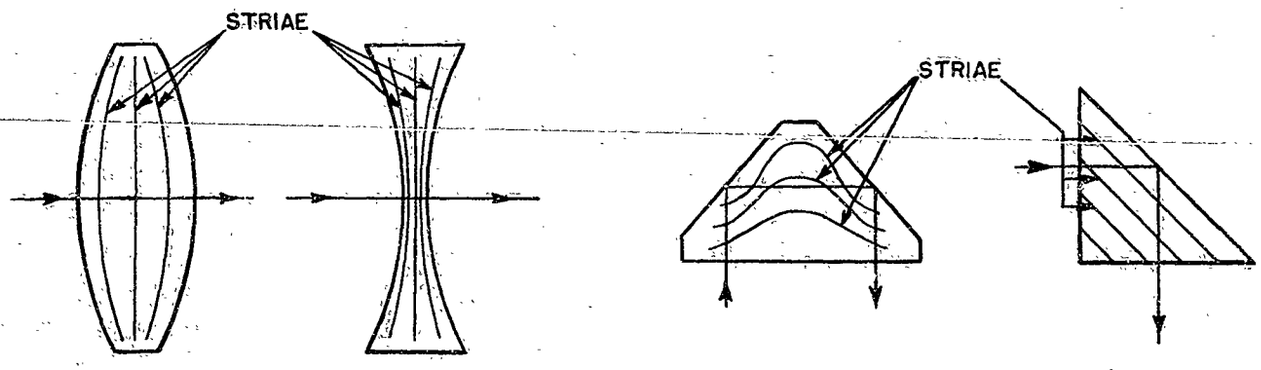

(a) Convex Lens (b) Concave Lens (c) Porro Prism (d) Right-angle Reflecting Prism

Figure 217.—Orientation of Striae in Formed Blanks.

Index of Refraction.—Since the refractive index of the immersion liquid is made equal to that of the glass during the striae inspection, the test also becomes one for index of refraction of the blanks, when sodium light is used as a source. Usually the refractive index of the liquid is made equal to a glass sample having the correct index of refraction. This sample is small and is kept immersed in the liquid throughout the test. The difference between the index of refraction of the liquid and that of the blanks being tested is estimated by comparison with another sample of a known difference.

4. Strain

Inspection of formed blanks for strain may be done either dry, or by immersion. The dry inspection is satisfactory for prism blanks, or for lens blanks having only a moderate curvature. The test then proceeds as described for slab glass. Lenses of sharp curvature may be inspected for strain by immersing the blank in a tank of liquid the refractive index of which is approximately the same as that of the blanks. If the polariscope used is similar to the one illustrated in Figure 216, the bottom of the tank must be transparent. When testing blanks for strain by the immersion method, it is important that the temperature of the liquid and glass be very nearly the same, since a small difference in temperature causes a temporary strain to appear in the glass.

CHAPTER 3

GLASS CUTTING

	Page No.
Hand Method of Cutting Glass.	302
Machine Method of Cutting Glass.	302
Cutting Wheels.	302
Cutting Oils.	302
Machines.	302
American Chain & Cable Company Horizontal Glass Saw, Model 302.	302
Operation.	303
Making a Circular Cut.	304
Felker Manufacturing Company Glass Saw.	306

The first operation performed on slab glass is to cut the slab into squares or strips of the approximate sizes and shapes of the optical elements to be made. This operation may be performed either by hand (using a scriber) or by machine.

A method of cutting small pressings by machine is described in Chapter 14, *Small Abbe Prisms*.

HAND METHOD OF CUTTING GLASS

The equipment in most optical shops generally includes small hand scribers with steel wheels for cutting either ground or polished glass surfaces, and diamond cutters for use only on polished surfaces. A straightedge is used as a guide for straight cuts.

The slab to be cut is firmly and evenly bedded and braced on the table where the cutting is to be done. The line for the cut is established at least 0.10 inch over the finished dimension for the piece. This allowance is to take care of uneven breakage and further processing.

The straightedge is laid along the cutting line, to guide the cutting tool, and is secured in position to guard against shifting. In locating the straightedge, proper clearance must be allowed for the space necessary for the cutting tool.

The cutter is placed on the line to be cut and a firm, steady pressure is applied. The path of the cutter should be across the entire piece in one stroke. The pressure applied starts a fissure that extends downward into the glass. Thin pieces then can be completely broken by a bending action applied by the hands about the fissure. Pieces that cannot be broken in this manner are tapped with a small hammer on the opposite surface directly above the cut.

Circular pieces can be cut with a circle cutter or a modified hand tool, equipped with a radius arm to cut pieces of various diameters.

A detailed description of glass cutting tools and their usage may be found in text books on the manufacture of optical elements.* Such information will be of value in the smaller shops and in instances where mechanical saws are unavailable or unsuitable.

MACHINE METHOD OF CUTTING GLASS

The saws described are used to cut slabs of glass. They will cut a single piece of glass or a series of pieces which have been waxed to a supporting plate. The saws may also be used for certain special glass-cutting jobs.

Cutting Wheels.—Rubber-bonded carborundum, copper or steel serrated diamond, or sintered diamond wheels can be used interchangeably in various diameters and thicknesses. A wheel 14 inches in diameter and $\frac{1}{16}$ inch in thickness is a good selection for general purposes.

Cutting Oils.—The coolant is a light machine oil compound. Using 'No. 138 International Compound', an emulsion made by the International Chemical Company, the mixture is eighty parts of water to one of compound. Other suitable soluble oils may be found in Chapter 25.

Machines.—Typical machines which are being used as glass-cutting saws are manufactured by the Andrew C. Campbell Division of the American Chain and Cable Company, and by the Felker Manufacturing Company.

American Chain & Cable Company Horizontal Glass Saw, Model 302.

The horizontal traverse of the wheel head of the Model 302 machine (see Figure 301) is actuated by hydraulic pressure and its speed in either direction is controlled by a metering valve. The rate of feed of the wheel head is variable from 0 to 108 inches per minute. The effective cutting length of the wheel is 20 inches. The automatic wheel-head reversing mechanism can be used to stop the feed at either end of the stroke or to reverse the direction of movement at either or both ends of the stroke. The wheel head is raised and lowered by means of a hand wheel.

*Orford, Henry. *Lens Work for Amateurs*, 5th Edition, pp. 8–17. London: Pitman, 1931
Strong, John W. *Procedures in Experimental Physics*, pp. 34–39. Prentice-Hall, 1943.

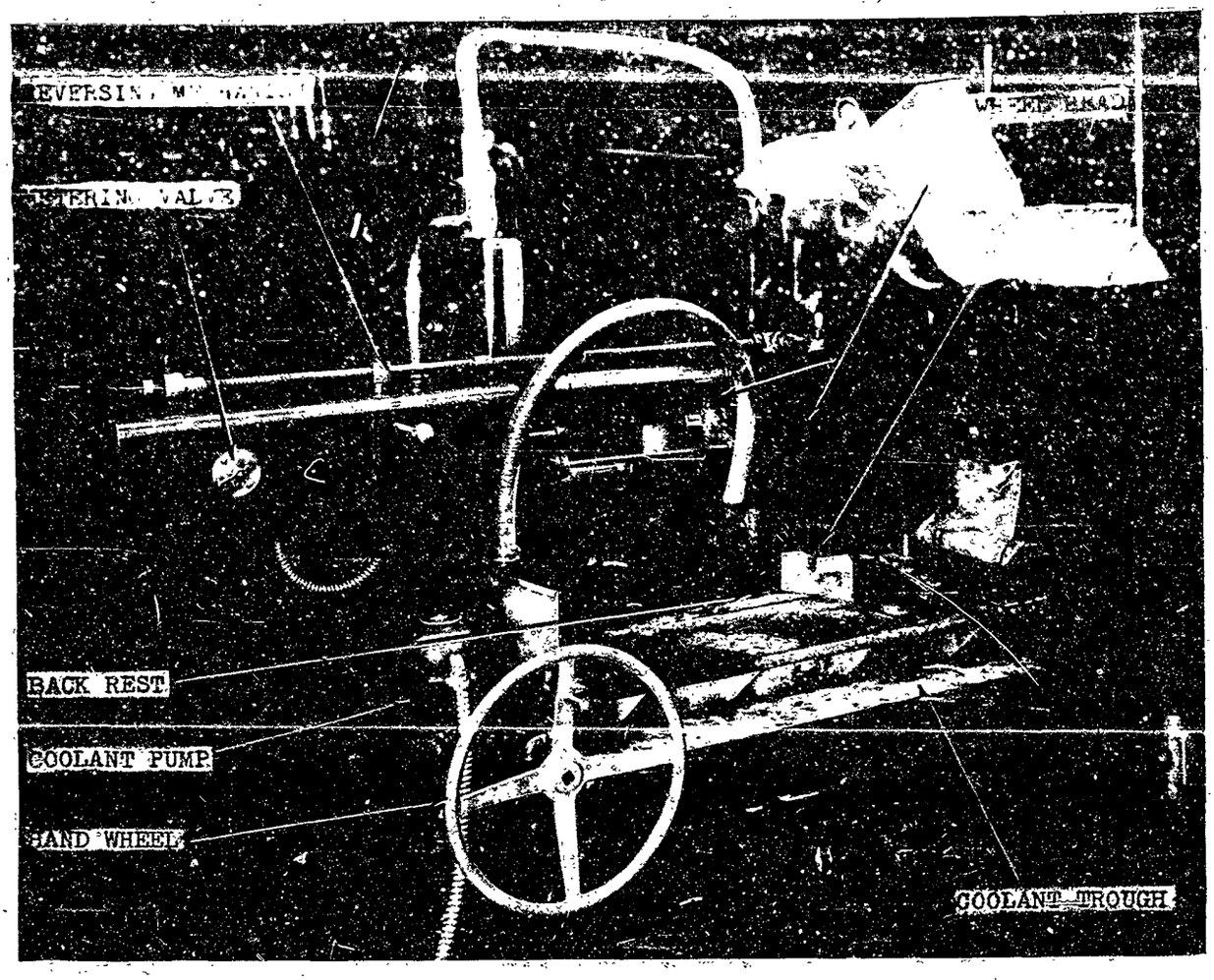

Figure 301.—Cutting Slab Glass into Prism Blanks with a Horizontal Glass Saw. (American Chain & Cable Company, Model 302)

Operation.—The work is sometimes held in a vise arrangement on the table of the machine. A strip of spring steel is placed against the work piece and secured by two adjustable clamps. These clamps can be adjusted to accommodate different sizes of work. The dimension of the cut is controlled by the back rest, which also prevents the cut piece from flying off the table. The work is kept cool and lubricated by the flood of coolant which is pumped directly onto the cutting wheel. All the excess solution is caught in a trough, piped back to a reserve tank, and pumped up through a rubber hose, ready for respraying. The lubricating liquid can be re-used until it becomes gummy with the residue of glass.

Two methods of cutting glass with this saw are used. In one method, a pass of the wheel is made completely across the work forming a groove approximately 1/16 inch deep. The wheel is returned to the starting point at the end of the stroke and the head is lowered from 1/16 to 3/8 inch, depending on the type of glass to be cut or the type of finish desired. This operation is repeated until the glass has been cut in two.

With the second method, the wheel moves horizontally through the piece as above, but the work piece is cut in two with one traverse of the wheel.

When opposite sides of a piece of glass have already been rough ground plano-parallel and to thickness, *e.g.*, the square pieces mentioned

in Chapter 4, Sawing the Diagonal, a different technique is employed. The pieces are mounted with wax on a metal plate and then cut to within ⅛ inch of the plate. After the pieces are removed, the cut is completed by tapping with a small hammer. This exception to the two methods of cutting discussed above is advisable since the saw blade often causes the surface next to the saw table to chip at the cut.

Making a Circular Cut.—By the addition of a special fixture fastened to a revolving head, this saw performs an accurate circular cut on a glass surface, as shown in Figure 302. The cutting wheel is not traversed when performing this operation. The lower (stationary) portion of the head is clamped onto the bed. The fixture is mounted on the upper (revolving) portion of the head directly over the axis of rotation.

The head is positioned on the bed so that the distance from its center to the nearest cutting edge of the wheel is equal to the radius of the desired cut. The fixture is revolved by turning the handwheel. For the setup shown in Figure 302, the infeed per revolution is ⅓ of the total depth of the cut.

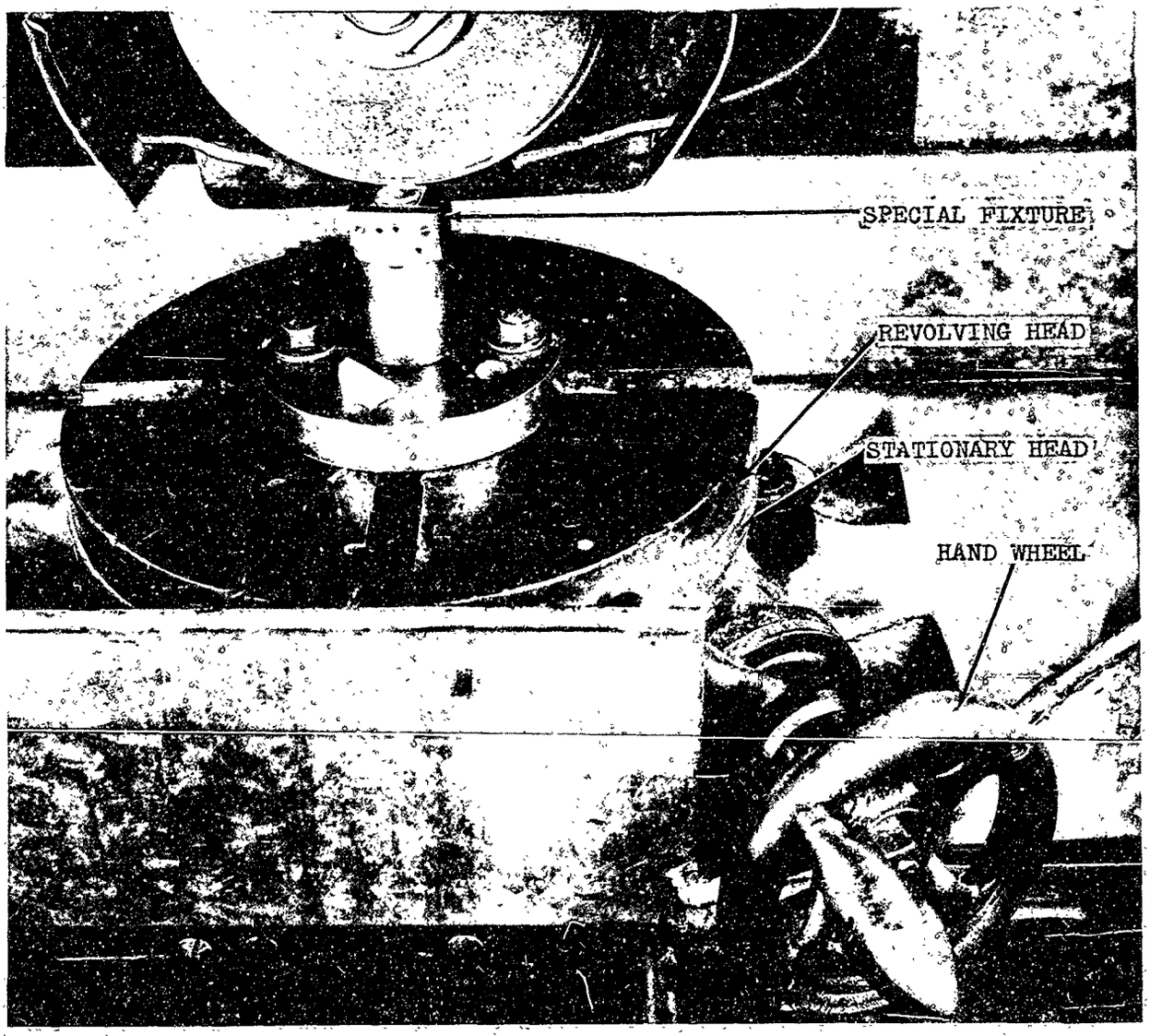

Figure 302.—Making a Circular Cut on a Prism Face.

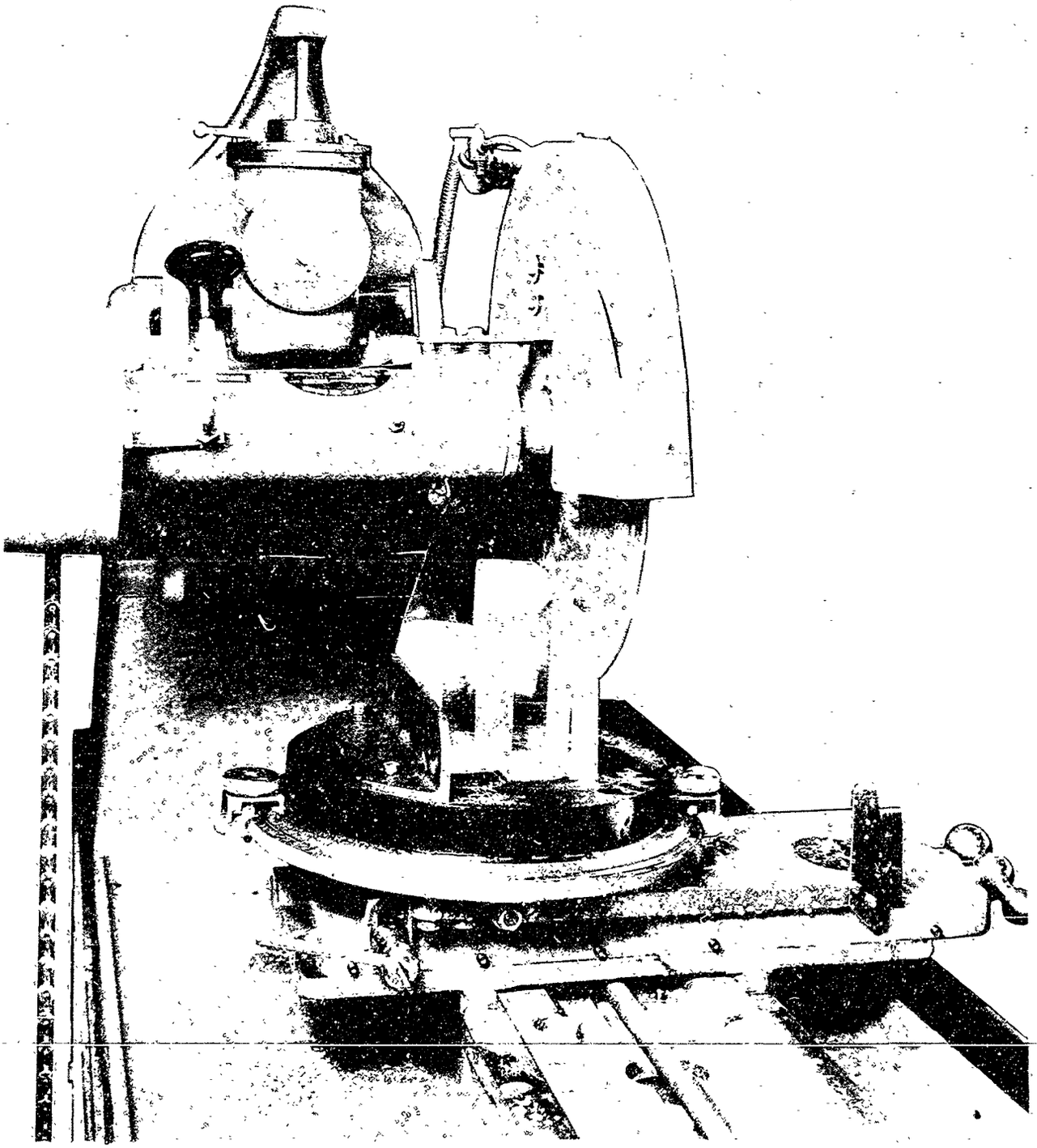

Felker Manufacturing Company

Figure 303.—Optical Glass Saw.

Felker Manufacturing Company Glass Saw

Figure 303 shows an optical glass saw which was originally intended for sawing quartz used in the manufacture of quartz crystal controls and other piezo-electric devices for radio communication. The machine consists of a cast-iron base with the necessary pads for mounting the longitudinal and cross feeds, and a wheel-spindle pivot support. The wheel-spindle housing is cast integrally with a frame, one end of which supports a counterweight mounted on a threaded stud. This mounting arrangement permits movement of the weight forward and backward to adjust the cutting pressure. On the back of a dash-pot piston support, there is an adjustable stop to regulate the depth of cut. The rate of cutting is controlled by a variable orifice type of dash-pot. The cutting speed is 4000 to 4500 surface feet per minute. The longitudinal and cross feeds are of the typical screw arrangement with thimbles graduated in increments of 0.001 inch. A rotating head or work base is mounted on the cross feed and is equipped with a tilting device ranging from horizontal to a 10° inclination. The rotating head is calibrated in degrees and has a vernier scale.

As a precaution, a flat piece of Aberdeen stone should be mounted on the rotating head to prevent damaging the saw or marking the machined surface of the head. A thermoplastic such as 'Stickum' is used to fasten the glass to the table.

CHAPTER 4

ROUGH GRINDING PRISMS BY HAND

	Page No.
Fundamentals of Rough Grinding.	404
Relation to Subsequent Operations.	404
Grinding Mills.	405
Fixtures.	405
Working on the Grinding Mill.	406
Basic Rough Grinding Operations.	407
1. Cutting into Squares (Slab Glass Only).	407
2. Grinding Prism Sides Parallel and to Thickness.	407
3. Stacking, and Squaring the Stack.	407
4. Grinding Stack Sides Parallel (Slab Glass Only).	408
5. Sawing the Diagonal (Slab Glass Only).	409
6. Grinding the Hypotenuse.	409
7. Correcting the Angles.	409
8. Grinding Tops and Corners.	409
Preparation for Rough Grinding.	410
Adhesives.	410
Selecting the Blocking Plate.	411
Removing Edge Irregularities.	411
Mounting.	411
Rough Grinding Various Types of Prisms.	412
Porro Prism.	412
First Side.	412
Second Side.	412
Stacking.	413
Squaring the Stack.	413
(a) Reference Base.	413
(b) Grinding the 90° Angle.	414
Checking the 90° Angles.	414
Hypotenuse.	414
Correcting the Hypotenuse.	416
Groove.	416
Ends (Radius).	416
Edges.	417
Manual Beveling.	417
Machine Beveling.	417

	Page No.
Abbe Prism.	417
Bottom and Side 90° Faces.	417
Top.	417
Side.	417
End 45° Face (First Grind).	417
End (Bevel).	417
Diagonal End (Bevel).	418
Diagonal 45° Face.	418
End 45° Face (Second Grind).	420
Corners.	420
End (Radius).	420
Correcting the Angles.	421
Edges.	421
Amici Roof Prism.	421
Ends.	421
Roof Faces.	421
Edges.	421
Correcting the Angles.	421
Top.	421
Leman Prism.	421
Sides (First Grind).	421
Top Face and End.	425
Bottom Face.	425
Angle Face.	425
Roof Faces.	425
Sides (Second Grind).	425
Cylindrical Surface.	427
Cylindrical Edge.	427
Dove Prism.	428
90° Faces and Hypotenuse.	428
Correcting the Pyramidal Angle.	428
Top.	428
Groove.	428
Corners.	428
Penta Prism.	428
Sides and 90° Faces.	428
End.	428
Silvered Faces.	430
Critical Angle.	430
Correcting the Critical Angle.	432

	Page No.
Ocular Prism (Height Finder M1).	432
90° Face, Top, End, and Slanting Face.	432
End Surface.	432
Side.	432
Silvered Face.	433
Correcting the Angles.	433
45° Face	433
Correcting the 45° Angle.	433
Ocular "A" Prism (1–m Range Finder M1916)	434
Sides, Bottom Face, Top, and End.	434
45° Face.	434
Correcting the 45° Angle.	435
25° Face.	435
Correcting the 25° Angle.	435

Prisms have been described in Chapter 1. They can be made from slab glass sawed as described in Chapter 3 or from molded blanks. This chapter describes the rough forming of these prisms by grinding them on rotating iron disks called 'mills' (Figure 401), using a loose abrasive mixed with water for a grinding medium.

Emphasis has been placed on the fundamentals of prism grinding and the equipment that has been developed to do this work. The reader can apply this information not only to the manufacture of existing types of prisms, but also to any different types that he may be called upon to make.

The early part of this chapter describes the fundamentals and basic operations of rough grinding prisms by hand, while the latter portion is devoted to the manufacture of porro prisms (the most 'typical' type of prism), and the modifications of the basic operations that are required to grind a number of other widely used prisms.

FUNDAMENTALS OF ROUGH GRINDING

Relation to Subsequent Operations.—Aside from sawing, a simple operation which may be eliminated if molded blanks are used, the three basic operations in manufacturing a prism are —rough grinding, fine grinding, and polishing. Rough grinding may be defined arbitrarily as those grinding operations performed prior to blocking prism blanks for fine grinding and polishing.

The three basic operations that are required to grind and polish a prism face are outlined and described in Figure 402. In addition, this chart shows two hand correction operations which may be required if sufficient care is not taken in preparing accurate fixtures for rough

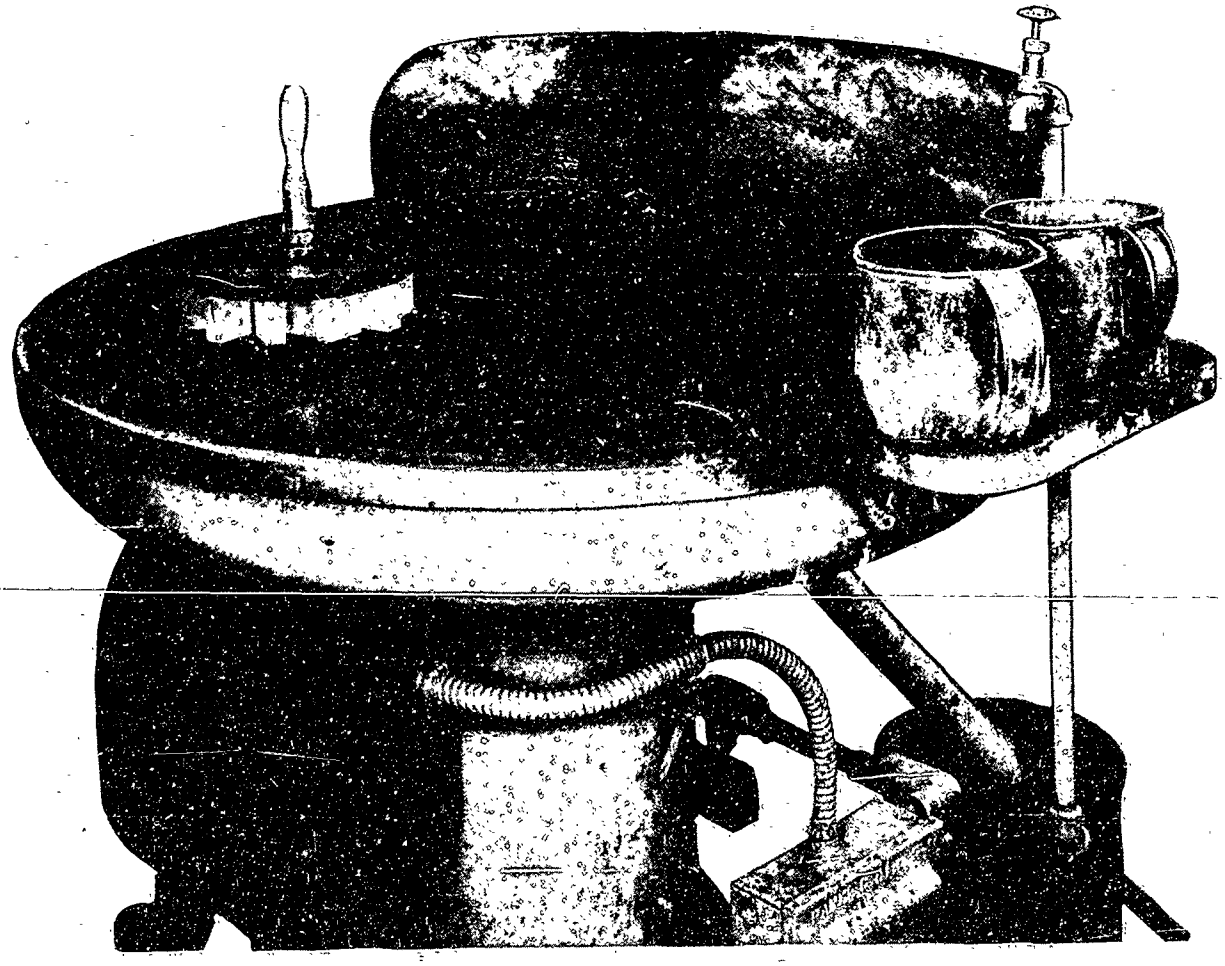

Figure 401.—A Block of Prism Blanks on a Large Mill.

grinding, in mounting the blanks in the fixtures, and in the actual grinding and polishing. Since the cost of accurate fixtures is relatively high it is sometimes more economical, especially where small quantities are desired, to use cheaper fixtures and perform one or both of these supplementary operations.

Grinding Mills.—Grinding mills are classified by their diameter as large or small, a mill that is more than 18 inches in diameter being known as a large mill, while one that is 18 inches or less in diameter is considered to be a small one. A slight concavity will develop on the surface of a large mill in the area that is used most frequently.

The grinding mills should be checked with a straightedge and corrected when necessary. Large mills are corrected usually by machining on a lathe or boring mill, while small mills are corrected in place manually with a carborundum stone. It is easier to distribute the wear evenly on a small mill than on a large mill, and therefore it is not necessary to correct its surface as frequently. It is preferable to keep the surface of a small mill slightly convex. As the operator attains more skill in the manipulation of blocks on a large mill, the necessity for correcting its face will become less frequent.

Fixtures.—Sufficient accuracy may be obtained in rough and fine grinding to eliminate hand polishing correction. This is accomplished generally by mounting the prism blanks on plates or special blocks made from metal such as meehanite or steel. The pieces of glass must be waxed firmly to the fixture and seated carefully to prevent shifting. The accuracy of the angles obtained in the prisms is limited by the precision of these fixtures. For example, in order to process prisms within 2 minutes of arc, the fixtures must be at least that accurate.

CHART OF BASIC OPERATIONS IN PRISM MANUFACTURE

No.	Operation	Function	Degree of flatness obtained in each operation	Magnitude of surface defects after completion of operation
1	Rough Grinding	To shape prism, obtain proper linear dimensions and in most cases the final angular dimensions.		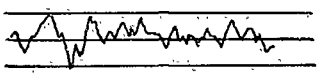 FFF Brush Diagram
2	Grinding Hand Correction *	To reduce any angular errors that remain after rough grinding to within the specified tolerances.	No change.	No change
3	Fine Grinding	To remove pits and scratches of preceding grinds, preparing surface for polishing. To reduce rough ground surface to the degree of optical flatness required in the finished prism.	From several bands to 1/10 band or better, depending on the accuracy required.	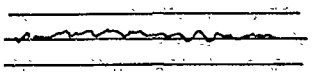 #1600 Brush Diagram
4	Polishing	Remove grinding pits and any scratches remaining.	No change.	Theoretically a polished surface is free of pits and scratches. In practice, pits from 0.0002 to 0.0003 and scratches up to 0.0005 inch exist.
5	Polishing Hand Correction **	To reduce any angular errors that remain after polishing to within the specified tolerances.	No change.	No change.

* It is possible (and frequently practical) to obtain the necessary accuracy of angle during rough grinding thus eliminating the step of grinding hand correction.

** Polishing hand correction also may be eliminated by obtaining (generally through the use of very precise fixtures) the requisite angle accuracy during fine grinding and maintaining it during polishing.

Figure 402.

The initial cost and the maintenance of such precision fixtures is expensive, but they reduce errors which may be due to inexperienced personnel. In other words, much of the responsibility for the accuracy in grinding may be transferred from the optical shop to the tool room. A plaster block may be considered one form of fine-grinding and polishing fixture. However, because a certain amount of error may be introduced in plaster blocking, closer tolerance on the low limit should be observed during the rough grinding operation to allow sufficient material for correcting such error.

Working on the Grinding Mill.—Since the surface of the mill as well as that of the glass is ground away during the grinding process, the work must be manipulated in such a manner that the mill will retain the desired contour.

Essentially, the resultant shape of the work is the exact opposite of that of the mill surface on which it is ground. That is, a concave mill surface produces a convex work surface and vice versa. Therefore, it is necessary to check the contour of the mill carefully from time to time and make allowance for any change in its shape during grinding.

It is preferable to grind the surfaces of a prism blank until they are flat or slightly concave, as this will facilitate both the blocking and fine-grinding operations which follow. As much progress should be made towards this end as is practicable with the #70 and #150 abrasives, and the final contour of the surface desired by rough grinding should be obtained with #220 abrasive. This is important, because the principal function of the FF and FFF abrasives which are used next, is to remove glass evenly across the entire surface. If these latter abrasives were employed to correct the contour, a much longer grinding time would be required.

The abrasive must be of even particle size to prevent heavy scratching and pitting, while the grinding mixture must be of the proper consistency to avoid scratching the glass surface and insure maximum cutting efficiency. In rough grinding a glass surface, the coarsest abrasive is used for the first stage of the process and is followed by successively finer abrasives as the grinding progresses. (See Figure 403.)

The abrasive–water mixture is spread on the mill after which the work block is placed on it gently about half way between the center and the edge and allowed to turn freely for a few seconds by holding the handle loosely. Next it is held with the handle resting in the pocket between the thumb and forefinger of the hand. While moving it back and forth across the face of the mill, it is turned in quarter revolutions in a direction counter to the rotation of the mill. Pressure is applied at each turning point.

When the abrasive on the mill is spent (*i.e.*, has lost its cutting efficiency), it is sometimes advisable to remove the block and to pour water across the face of the mill while it is rotating to clean it before making another application. This removes any residue which would reduce the cutting power of the newly applied abrasive.

TABLE OF LOOSE ABRASIVES USED FOR ROUGH GRINDING

ABRASIVE	PARTICLE SIZE (APPROXIMATE) *inches*	MANUFACTURER'S DESIGNATION	THICKNESS REMOVED BY EACH ABRASIVE *inches*	THICKNESS REMAINING FOR SUBSEQUENT REMOVAL *inches*
Coarse	0.0098	#70 grit	excess thickness (over 0.175)	0.175
	0.0039	#150 grit	0.100	0.075
	0.0029	#220 grit (large mill)	0.040	0.035
	0.0029	#220 grit (small mill)	0.020	0.015
Medium	0.0012	FF	0.010	0.005
	0.0008	FFF	0.005	0.000

The abrasive designations used for rough grinding in this book are those of the Carborundum Company. For equivalent sizes by other manufacturers, and for fine grinding abrasives, see Figure 2501.

Figure 403.

While it is necessary to maintain an evenly ground surface, the tolerances for flatness are not as close in rough grinding as in fine grinding, since the greater evenness obtained in fine grinding permits a greater degree of flatness. However, it is advisable to take measurements of the glass frequently, in order to avoid grinding below the limits set forth in Figure 403.

Variations in thickness of the overhanging pieces of glass are indicated by marking each piece with a china-marking pencil. While out-of-parallel variation of 0.030 inch is permissible when grinding with #70 and #150 abrasives, the variation over the entire diameter of the block should not exceed 0.001 inch when the finished thickness has been attained. Because of the greater speed, grinding is accomplished more rapidly on the periphery of the mill than on its center. Therefore the area of the block which requires most grinding should be kept towards the outer edge of the mill. The exact amount of pressure to exert, the area in which it is needed, and the length of time necessary between taking measurements to determine the progress of the grinding depends largely on the individual and can only be determined by experience.

The block should be allowed to turn freely with the rotation of the mill for several seconds in order to grind down any rough spots before it is removed for measurement. Then it should be kept parallel with the mill as it is lifted in order to avoid chipping or beveling.

The same technique is used in grinding on any size mill or with any size abrasive. A coarse abrasive cuts faster and removes a greater volume of glass than a fine one. Caution must be observed in all stages of grinding so that the surface is ground evenly but not too much.

When grinding with #220 abrasive, very often the work is started on a large mill and finished on a small one. In this way, the cutting power of the same size abrasive is utilized further to eliminate any surface irregularity.

BASIC ROUGH GRINDING OPERATIONS

Prisms may be made from slab glass or from formed blanks. Figure 404 lists the basic operations that are required to make a prism from slab glass and rough grind it in preparation for fine grinding. As noted in the figure, three of these steps are not necessary when molded blanks are used instead of slab glass. Care must be exercised in every step since each operation has a direct effect upon the one which follows.

TABLE OF BASIC ROUGH GRINDING OPERATIONS

NO.	OPERATION
1.	Cutting into Squares (for Slab Glass Only).
2.	Grinding Prism Sides Parallel and to Thickness.
3.	Stacking, and Squaring the Stack.
4.	Grinding Stack Sides Parallel (for Slab Glass Only).
5.	Sawing the Diagonal (for Slab Glass Only).
6.	Grinding the Hypotenuse.
7.	Correcting the Angles.
8.	Grinding Tops and Corners.

NOTE: Operation Nos. 1, 4, and 5 are not performed when using formed blanks.

Figure 404.

1. Cutting into Squares (Slab Glass Only).—This operation is the major difference between the processing of slab glass and molded blanks into prisms, since slab glass must be cut into squares and then into triangles. In order that the triangles of glass will be of the desired size, the rough square (Figure 405) must be large enough to compensate for the amount of glass that is lost when the diagonal cut is made, as shown in the figure.

2. Grinding Prism Sides Parallel and to Thickness.—This operation is the same for both slabs and formed blanks. In it, the sides are ground parallel and the pieces are brought to the proper thickness.

3. Stacking, and Squaring the Stack.—This operation is the same for both slab glass and formed blanks. The pieces, whether square or triangular, are put together with beeswax side by side into 'stacks', not more than 3½ inches in length, as shown in Figure 406. The

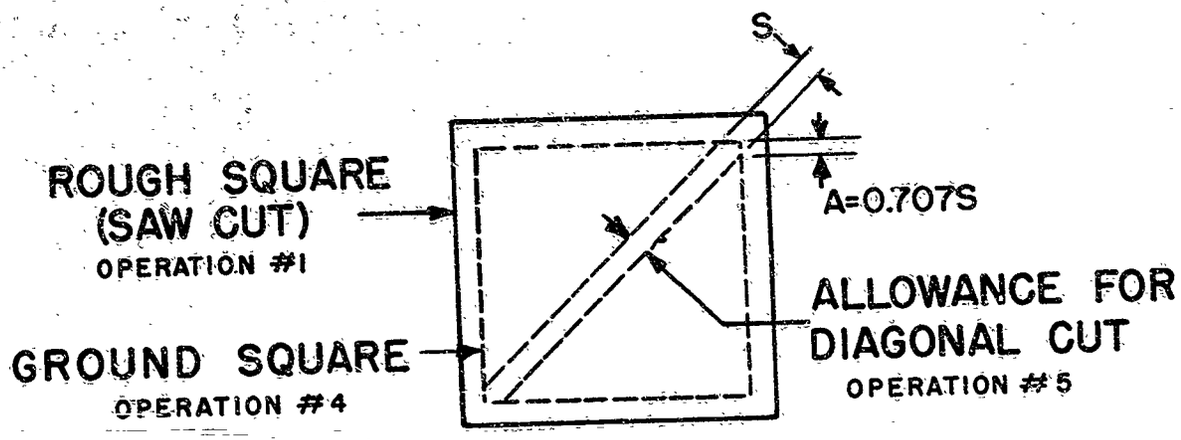

Figure 405.—Layout for Grinding a Square Piece with Allowance for Cutting the Diagonal.

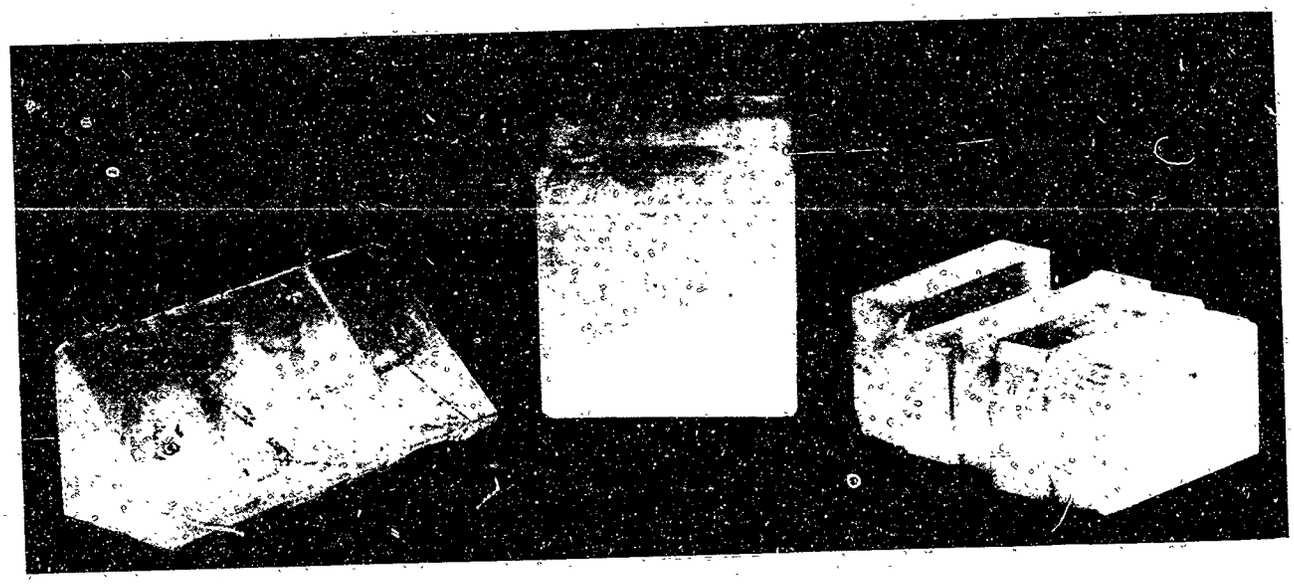

Figure 406.—Stacks of Glass.

primary purpose of this operation, which is performed by hand, is to establish a reference angle to which all other angles of the prisms can be referred. Usually a 90° angle is selected for this purpose, but even if an angle other than 90° is used, *e.g.*, 120° or 80°, the operation is still called 'squaring' (see Figure 407).

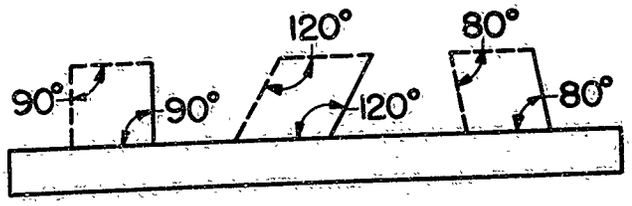

Figure 407.—Squaring Angles.

When the reference angle has been selected, it is measured carefully with a gage and any error is corrected by using FFF abrasive. Detailed information on methods for correcting angles is discussed in Chapter 15. In general, however, the finer the abrasive the more accurate will be the resulting angle.

4. **Grinding Stack Sides Parallel (Slab Glass Only).**—At the completion of the squaring operation, one of the squared sides of each stack is mounted on a blocking plate and the opposite sides are ground parallel. Next the stacks are removed, the other squared side of each is mounted on the plate and the opposite sides are ground parallel.

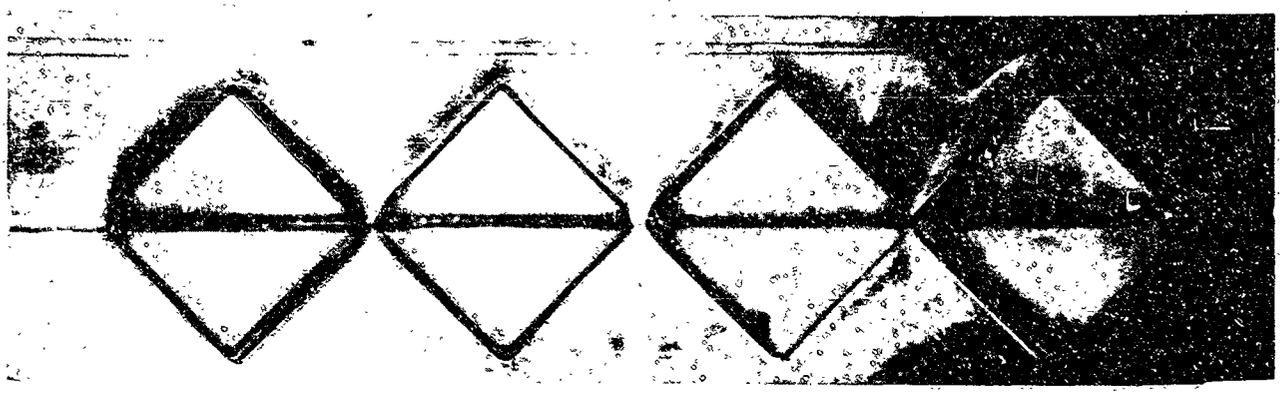

Figure 408.—Square Pieces with Diagonal Cut.

5. **Sawing the Diagonal (Slab Glass Only).**—The stacks are taken apart, and the glass squares are cleaned and mounted firmly, with beeswax, on metal strips so that the diagonal corners of each square lie on a line drawn along the center of the strip. The strip of glass squares is cut with a saw as discussed in Chapter 3. (See Figure 408.)

6. **Grinding the Hypotenuse.**—The next step is to mount the prism blanks with beeswax in a 90° V-plate, with the hypotenuse up, as shown in Figure 409, and then grind the work until the dimension AB is reached. If the length of the prism blank, CD, is the only dimension given, AB can be computed easily, because in an isosceles right triangle, the distance from the apex to the hypotenuse, that is, AB, is equal to one half of the length of the hypotenuse, CD.

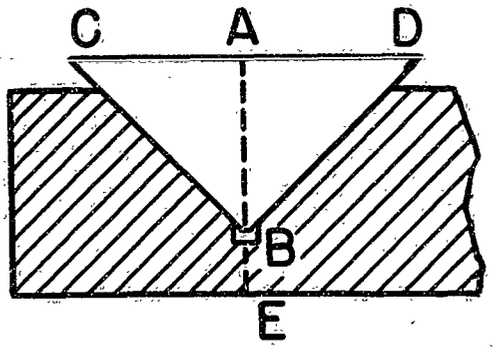

Figure 409.—Arrangement for Measuring Through a Prism Block.

Sometimes it is more convenient to measure the depth of the prism blank through the block, that is, measure the distance AE. In order to do this, it is necessary first, to determine the thickness BE, of the block itself. This can be done by placing a prism blank of known dimensions in the block and subtracting the depth of the prism blank, AB, from the overall thickness, AE. The dimension, BE, can then be used for all future grinding operations using this same fixture. When grinding certain pieces, particularly those having complicated angles, it may be advantageous to allow four equally spaced pieces called 'markers' to extend beyond the edge of the plate so that they can be measured directly with a micrometer as shown in Figure 411.

7. **Correcting the Angles.**—Methods for correcting angles are discussed in detail in Chapter 15.

8. **Grinding Tops and Corners.**—This operation is necessary for all prisms having regular corners or large flat bevels. The tops of the prism blanks are ground parallel to the hypotenuse faces on a blocking plate (Figures 410 and 411). Grinding corners (or bevels) on some prisms (see Figure 412), may require the use of an angle plate. The dimension through the block is obtained as described in Operation No. 6, above.

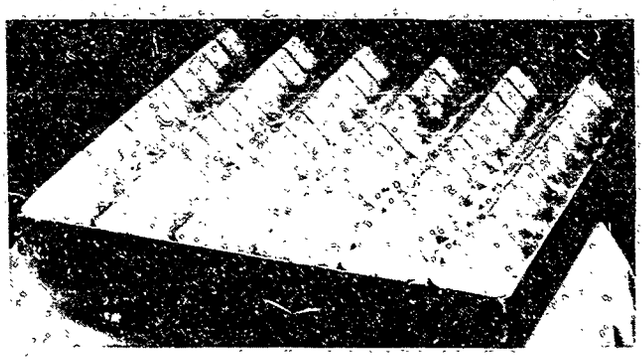

Shuron Optical Company

Figure 410.—Porro Prism Pressings Mounted on a Blocking Plate for Grinding the Tops.

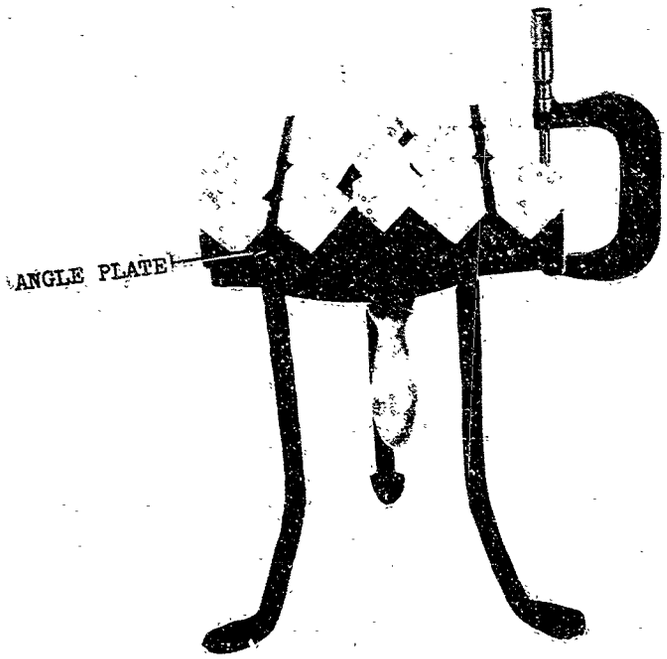

Figure 412.—Position of Micrometer for Determining the Size of Corners on Porro Prism Blanks.

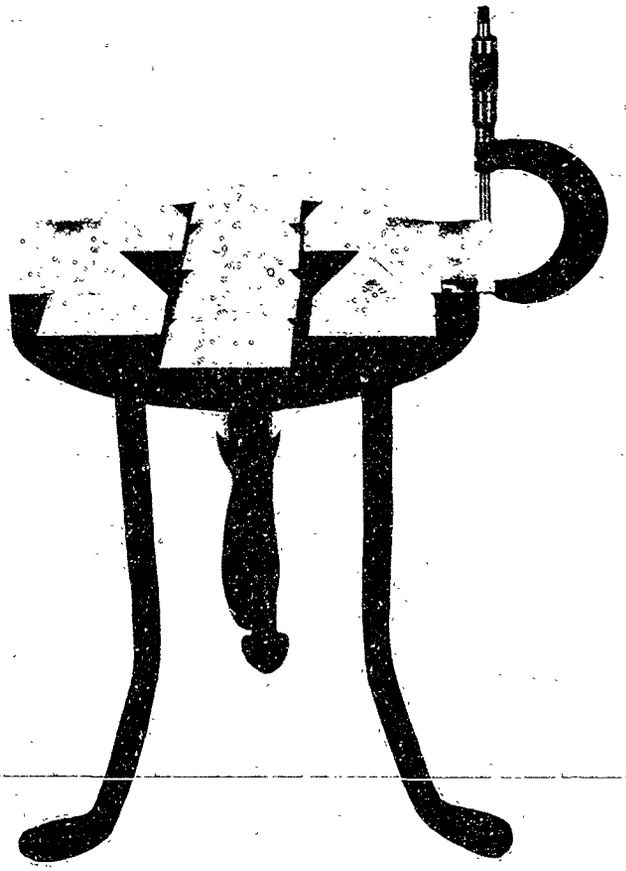

Figure 411.—Measuring After Grinding the Tops of Porro Prism Blanks.

PREPARATION FOR ROUGH GRINDING

Adhesives.—Adhesives should be strained before using to insure cleanliness, since grit or any foreign material may affect the accuracy of the work as a result of poor mounting.

The work to be done on the glass will determine the type of adhesive to be used. Sealing wax, which has a heavy non-pliable base, is employed usually in uniting surfaces, such as glass strips or wedges, (see Figures 413 and 416). 'Stickum' is used between rough surfaces, or in cases where the glass will be subjected to an exceptional amount of pressure, as when rough grinding with #70 or #150 abrasive. For second-side mounting where greater accuracy is required, 'Cerelene' or beeswax would be selected.

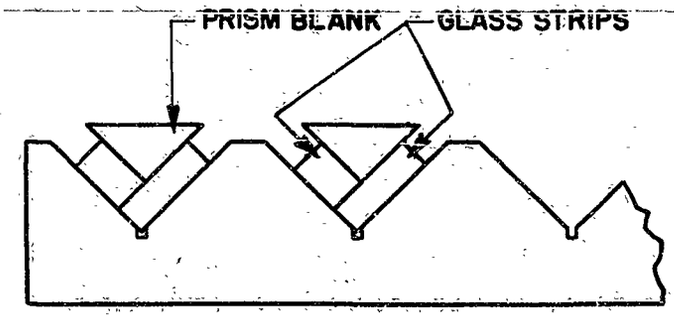

Figure 413.—Adapting Large Channel V-plate for Small Prism Blanks.

Selecting the Blocking Plate.—The top surface of a plano plate is checked with a straightedge as shown in Figure 414. A maximum concavity of 0.0005 inch in the center of the plate is permissible. The deviation space between the straightedge and the plate may be determined with considerable accuracy by adjusting a micrometer so that its opening shows the same amount of light that is seen under the straightedge. If the straightedge reveals high areas, that is, portions of the surface that are convex, the plate should be placed on a rotating spindle and these areas ground off with a carborundum stone.

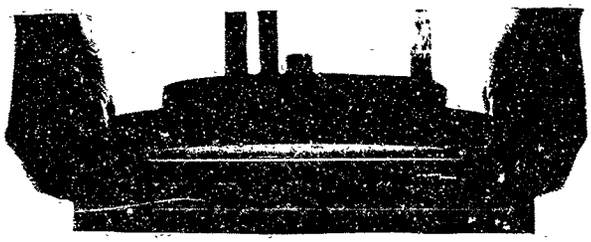

Figure 414.—Checking a Blocking Plate with a Straightedge.

An angle plate should be made to provide the greatest bearing surface possible (Figure 415), and should accommodate the work in such a manner that any chipping of a knife-edge is prevented.

If the prism angle desired is slightly different from the angle machined in the plate, the angle in the fixture can be corrected by preparing glass wedge-shaped strips of proper dimensions by hand, and mounting them in the angle channels with sealing wax. The prism blanks are then seated against the glass strips with beeswax, as shown in Figure 416. Similarly, a large channel can be reduced in depth to accommodate small prisms by inserting strips of flat plate glass as shown in Figure 413.

Removing Edge Irregularities.—When the area of the prism surfaces in contact with an angle plate, is smaller than the surface to be ground, edge irregularities may cause displacement of the blanks while grinding with a coarse, fast-cutting abrasive. For this reason, it is advisable to bevel all sharp edges and corners on a small mill with a medium abrasive (FF or FFF) before doing the principal grinding with a coarse (#70) abrasive.

Mounting.—In the optical trade, the noun 'block' is applied indiscriminately to (1) a plano plate, (2) a fixture having grooves or channels or (3) the resultant unit formed by mounting the work on either. Throughout this book, the plano plate is termed a 'blocking plate'; the fixture having one channel, an 'angle block' (*e.g.* a V–block); if more than one channel, an 'angle plate'; and once the work has been mounted, the unit comprised of fixture

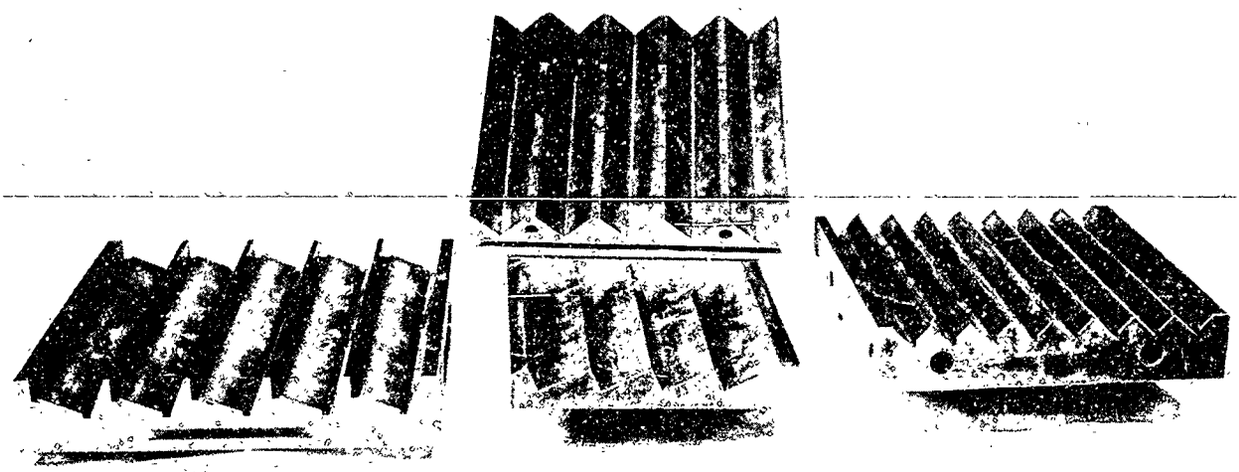

Figure 415.—Angle Plates for Mounting Prism Blanks.

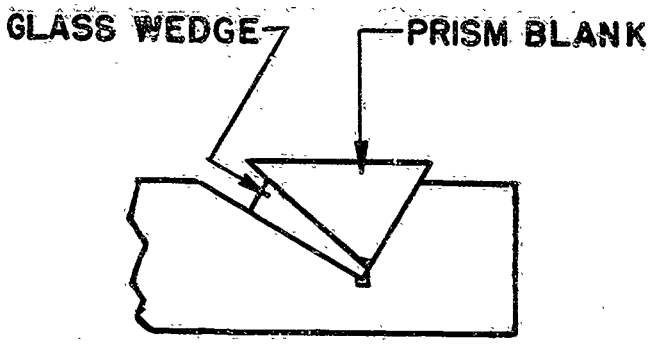

Figure 416.—Angle Plate with Glass Wedge for Changing the Angle of the Channel.

and work will be called a 'lens block', 'prism block', 'window block', 'filter block', 'reticle block', 'mirror block', 'work block', or simply 'block'. Therefore, when reference is made to a block being ground on a mill it means that the work is being ground and not the fixture.

The operation in which flatwork is attached to a fixture (plano or channeled), for holding in a definite position until the operation for which it was positioned has been completed, is termed 'mounting'.

One procedure for grinding has just been discussed, that is, the blanks are mounted on a blocking plate, one side ground, and then the pieces are removed from the plate, inverted, then mounted again and the other side ground. Another method, known as 'transferring' has been developed which is preferable in some ways. This is described in detail in Chapter 9.

Still another method has been developed which is known as 'continuous processing'. This differs from the preceding methods in that once the work is mounted, it is rough ground, fine ground, and polished completely before removing and remounting for processing on some other surface.

ROUGH GRINDING VARIOUS TYPES OF PRISMS

The basic rough grinding operations described above are now discussed in connection with porro prisms (see Chapter 1, Figure 103). It is to be noted that each operation is performed in the order already mentioned and certain additional steps are treated as they apply. Additional variations that pertain to other types of prisms then follow.

Porro Prism

First Side.—After cutting the slab glass into squares, or when using formed blanks, surfaces which are to become the sides of the prisms are prepared for processing.

A blocking plate is placed on a tripod and warmed sufficiently to melt the wax to be applied.1 The temperature required to do this wil depend on the flow point of the wax. Either a bunsen burner or an electrically heated hot plate is used, but the latter is preferable since it heats the plate more uniformly. After wiping each piece with a cloth, it is mounted on the blocking plate by pressing it firmly into the wax to insure firm adhesion. This process is repeated until the plate is filled with pieces spaced equally. Four pieces may be spaced equally around the circumference, to overhang the edge of the block for convenience in obtaining direct micrometer readings. (See Figure 411.)

After mounting the prism blanks, the block is placed on a ring in a water trough to cool as shown in Figure 417. The water level should be adjusted carefully so that it does not touch the glass, as heat cracks may result if cold water touches the warm glass.

It is customary to remove an equal amount of glass from each side of the pieces, that is, the amount that is to be removed from each side will be one half of the difference between the thickness of the original and the finished pieces. Finer abrasives are used as the rough grinding progresses and the work approaches the finished size. The table in Figure 403 will be useful in determining which abrasive should be used at each stage of rough grinding.

The amount of glass that has been removed can be determined from time to time by measuring the thickness of the pieces with a micrometer, either through the block or directly by means of overhanging markers. (See Figure 411.)

Second Side.—After the first side has been ground the block is heated and the prisms removed and cleaned. Next, they are remounted and ground in the same manner, but with the newly ground first side in contact with the blocking plate.

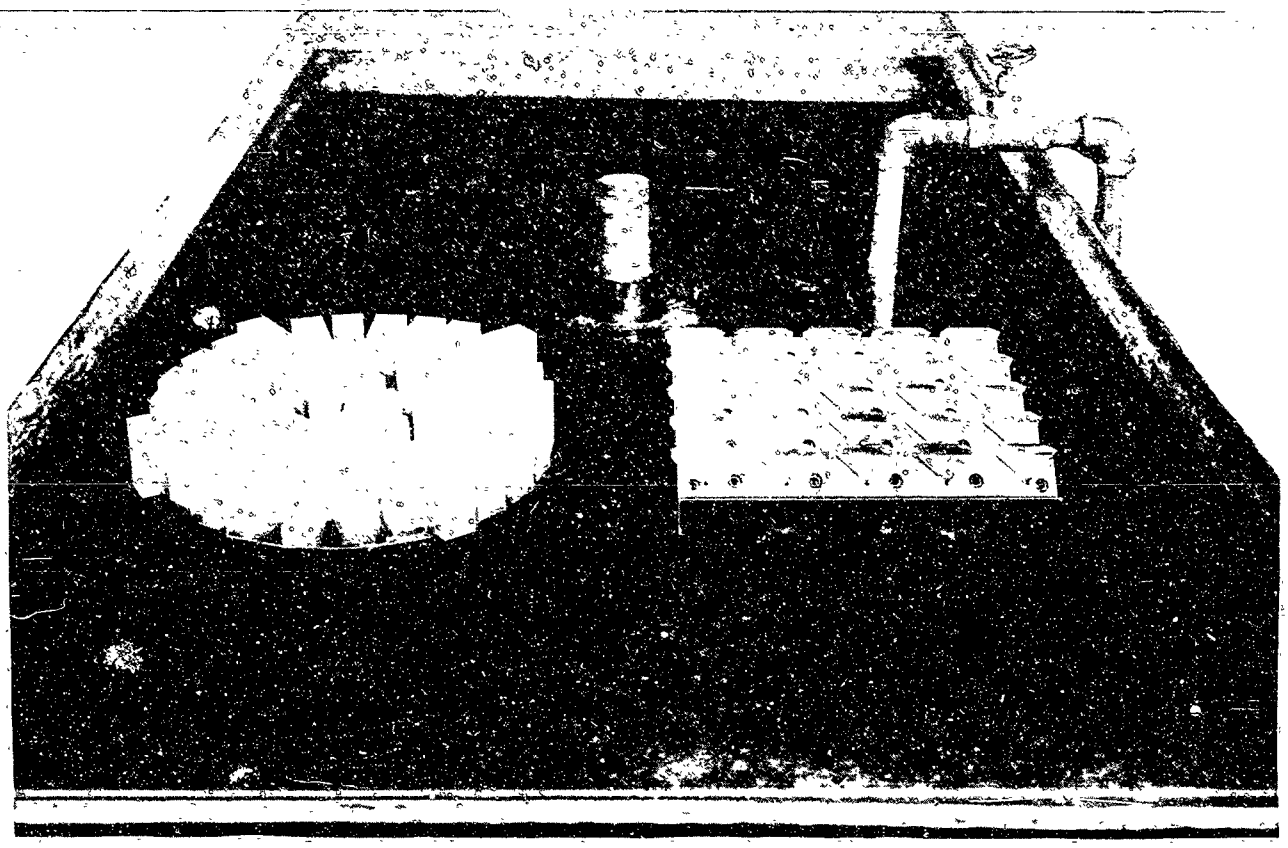

Figure 417.—Prism Blanks Cooling in a Trough of Water.

Stacking.—The pieces of glass are heated on a hot table or electric hot plate sufficiently to melt beeswax. A layer of beeswax is applied on one of the ground sides of one blank and another is placed on top of it. The pieces are rubbed and pressed together firmly in order to remove any surplus beeswax, thus insuring that the two surfaces are in close contact. Additional blanks are added one at a time in the same way until the stack is complete. The number of pieces which may be stacked together depends upon the size and shape of the prisms, but a stack exceeding 3½ inches in length is unwieldy and difficult to square. (See Figure 406.)

Next the stack is taken off the hot plate, placed in a 90°-angle plate, and a rejected large right-angle prism or suitable piece of metal, after being warmed, is placed against the end of the stack to act as a retainer as shown in Figure 418. The only function of the angle plate is to hold the stack in alinement until the wax solidifies. The stack is neither waxed to the plate nor to the retainer, but is pressed downward with the hand while the retaining prism acts as a brace.

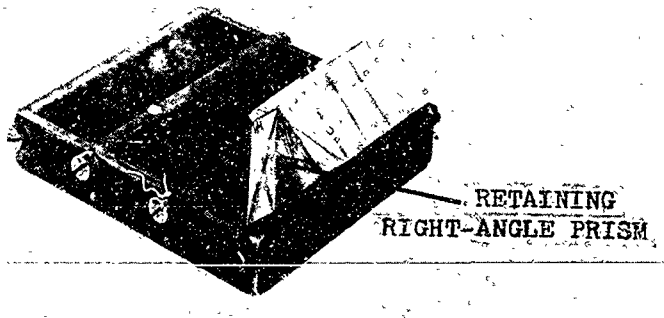

Figure 418.—V-plate with Stack and Retaining Prism.

Squaring the Stack. (a) Reference Base.—After cleaning the stack with a gasoline-moistened cloth, one end is marked with a lead pencil to designate the reference base for grinding the 90° angle.

(b) Grinding the 90° Angle.—In Figure 419(a), the end of a stack is taken as the base A. Face B is ground so that the angle between the base A and face B is 90°. Then the second face C is ground so that the angle between the faces B and C is 90°, and the angle between the base A and face C is also 90°. The angle between faces B and C is called the 'base angle'. These faces B and C are ground by hand with abrasives #150 through FFF as described above.

Checking the 90° Angles.—The use of gages for measuring angles is described in Chapter 15. A try square is used to check the three 90° angles shown in Figure 419(a) while grinding with the coarser abrasives (#70, #150, and #220) but a 90°-angle bar gage should be used when grinding with FF and FFF abrasives. Great care should be taken to avoid forming tapered edges. It is not essential to attain an accurate angle or flat surface while working on the roughing mills, but as the work progresses and the finer abrasives are used, the angle should be measured accurately with the gage and the surface should be flat or slightly concave.

Hypotenuse.—After grinding the stack sides parallel, separating the blanks, and sawing the diagonal, the hypotenuse is ground as described above under Basic Rough Grinding Operations (No. 6)

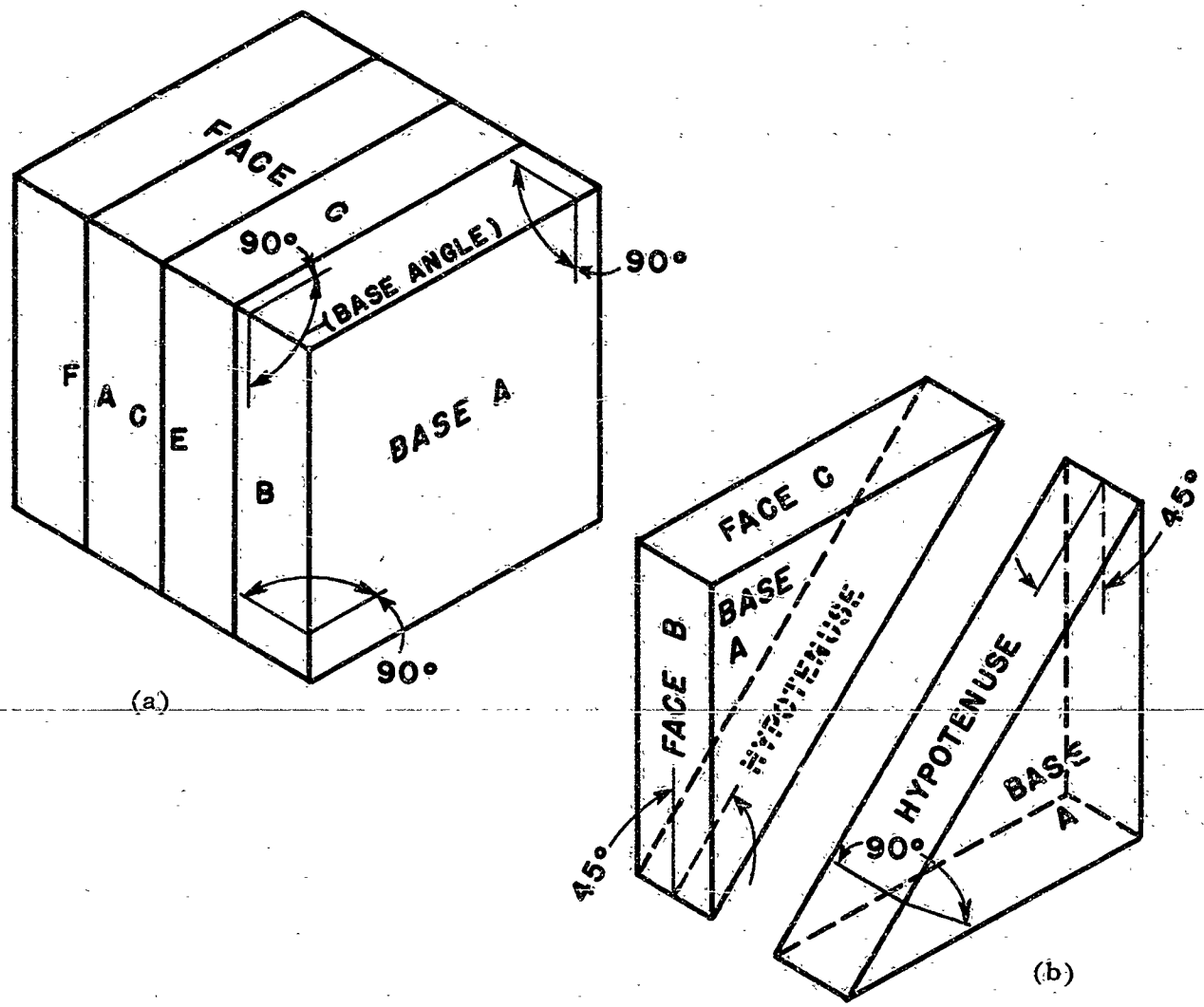

Figure 419.—Porro Prism Blanks Made from Slab Glass.

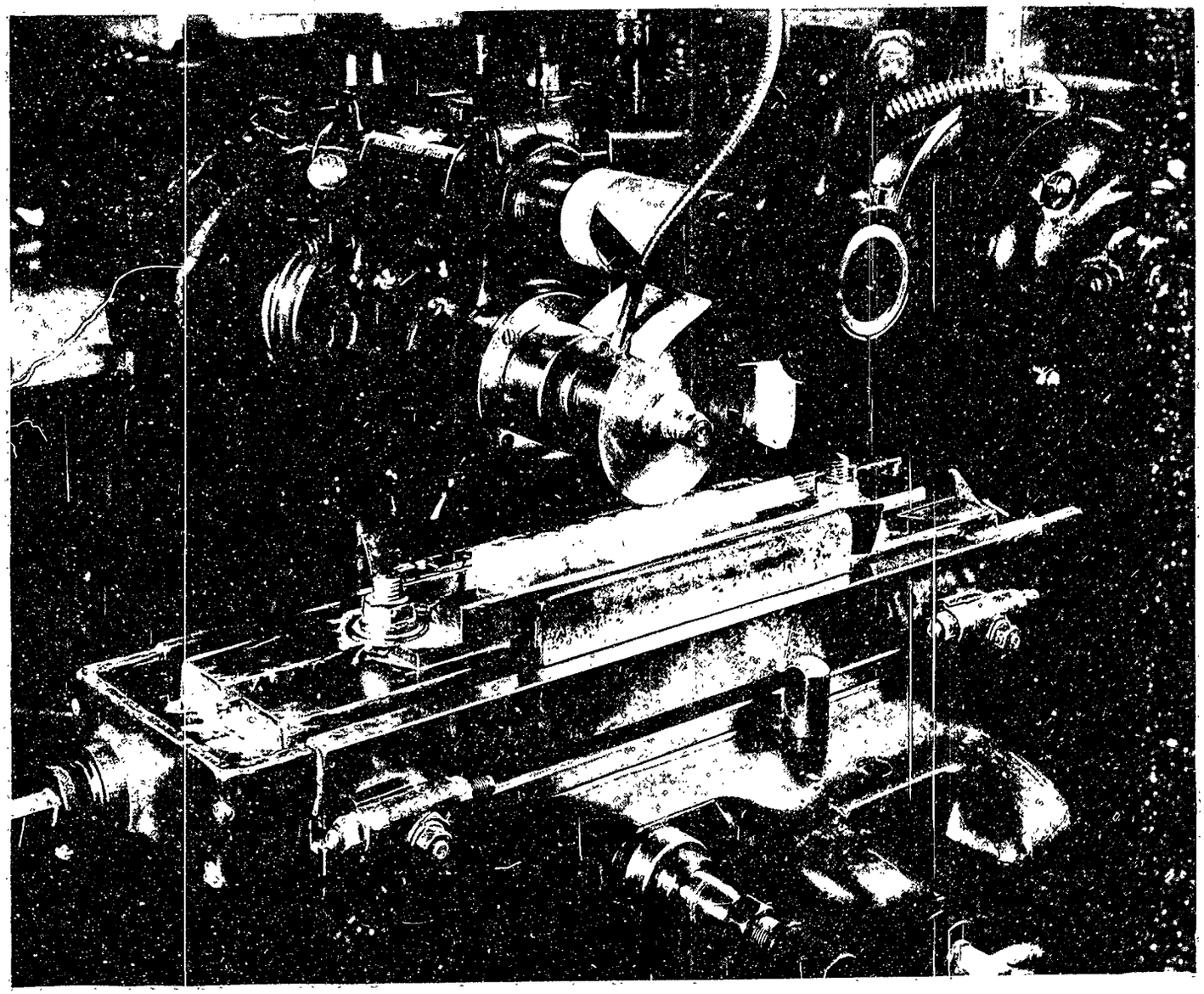

Mail Oil Burner Corpo

Figure 420.—Grooving Porro Prism Blanks in a Milling Machine.

Correcting the Hypotenuse.—Next the blanks are removed from the V–plate, and the hypotenuse of each piece is hand corrected, if necessary, by grinding it perpendicular to the base A as shown in Figure 419(b), and at a 45° angle with the face B. It is necessary to check the hypotenuse with only one face for 45° because, if one 45° angle is correct and the 90° angle is correct, the other 45° angle will be sufficiently close.

Groove.—In one method that is used for this operation, the prism blanks are placed in a V–block and set up under a vertical glass saw of the type described in Chapter 3. The correct depth and position of the groove is determined by comparison with a master prism. The saw is then moved over the entire length of the work. Other types of grooving machines are shown in Figures 420 and 421.

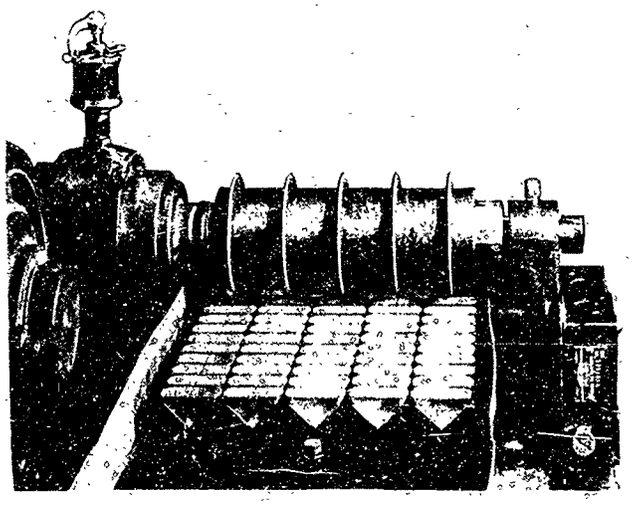

Shuron Optical Company

Figure 421.—Grooving Porro Prism Blanks with Five Cutters in a Milling Machine.

Another method for performing this operation is to use a brass pin cutter of the correct thickness set in a drill press. A master prism is used to establish the correct position and depth of the cut. The prism blanks are passed against the rotating pin while #220 abrasive and water are fed to it.

Ends (Radius).—When the ends of a porro prism are to be rounded, the radius may be ground entirely by hand. Metal stocks of the proper radius are waxed with stickum to each half of the hypotenuse in such a position that the over-all length of the prism will be correct when its ends have been ground. (See Figure 422.)

Preliminary grinding is usually done manually, using #150 abrasive for large prism blanks and #220 for the smaller types. There are several automatic edging machines which may be used for finishing this operation. One of these, a specially modified ophthalmic machine, is shown on Figure 423. In this machine, two prism blanks (one against each jaw of the chuck) with their hypotenuse faces in contact with each other, are held in each of two chucks and rotated against the grinding wheel. The prism blanks are brought in contact with a carborundum grinding wheel and each end is ground to the correct radius by means of a mechanism whose movement is controlled by a

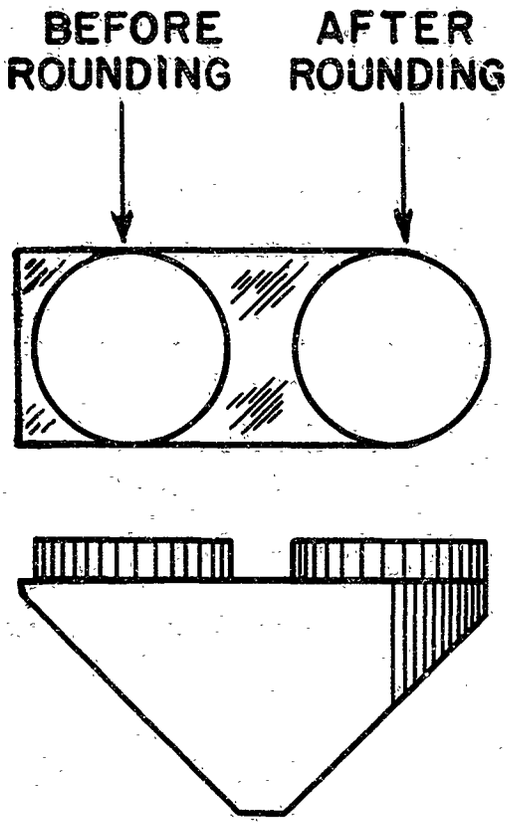

Figure 422.—Metal Stocks Waxed to a Porro Prism Pressing for Rounding the Ends.

suitable template. The blanks are removed from the machine and inspected with a go-no-go gage as described in Chapter 24. If this operation is performed after polishing, a piece of lens paper is placed between the hypotenuse faces, and the jaws of the chuck are lined with scotch tape to prevent scratching the polished 90° faces.

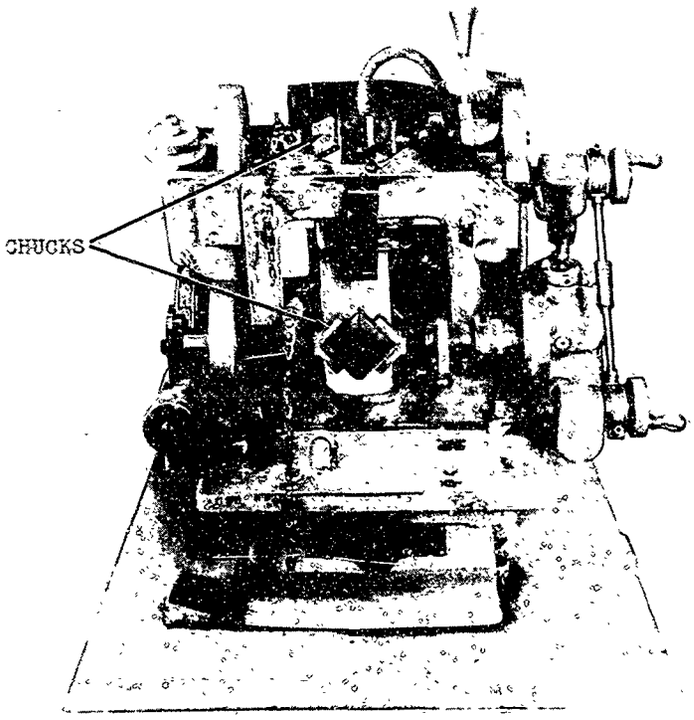

Figure 423.—Grinding the Cylindrical Ends of Porro Prism Blanks with an Ophthalmic Edging Machine.

Edges.—At the completion of the final hand correction of the porro prism blanks, all sharp edges are beveled. As mentioned above, a bevel or chamfer relieves the sharp edges of the prism which might flake and cause scratching during polishing. Bevels are usually ground at a 45° angle unless specified otherwise. If two ground faces meet at an edge to be beveled, the bevel is ground slightly larger than specified to allow for the removal of glass during fine grinding and polishing.

Manual Beveling.—Bevels are ground by hand, usually on an 8-inch tool with FFF abrasive, except that for large bevels, the grinding is started with FF and finished with FFF abrasive. When two previously polished surfaces require a bevel at their common edge, #303 abrasive is used.

Machine Beveling.—If the beveling is done with an abrasive wheel, either an aluminum oxide (Figure 424) or a diamond type (Figure 425) may be used.

Abbe Prism

This prism is made usually from formed blanks. For a special method of manufacturing small abbe prisms, refer to Chapter 14.

Bottom and Side 90° Faces.—Unlike the procedure used in other prisms, hand squaring is the initial step in grinding a large abbe prism blank. The bottom 90° face is squared on a mill using FFF abrasive to form a 90° angle with the side 90° face. (See Figure 105.)

Top.—After squaring, the bottom 90° face is mounted on a blocking plate with beeswax. Four prism blanks are allowed to overhang the edge of the plate to serve as 'markers', and the top is ground parallel to the bottom 90° face. The plate is heated and the blanks are removed and cleaned.

Side.—The side 90° face is mounted on a blocking plate with beeswax, and the side is ground parallel to it until the thickness is the same as that between the bottom 90° face and the top.

End 45° Face (First Grind).—The 45° angle is corrected only roughly with #220 abrasive, as it will be subject to final correction later.

End (Bevel).—A flat surface is ground between the end 45° face and the bottom 90° face of the molded blank (the rounded end), using an adjustable guide-bar fixture to support the work. The guide bar is placed perpendicular to the mill so that its base is parallel to the mill surface. The bottom 90° face is placed against the iron guide strip, the prism blank is lowered gently to the mill, and the end is ground. This bevel is purposely made wider than desired on the finished prism, since the end 45° face, and the bottom 90° face will both be processed further.

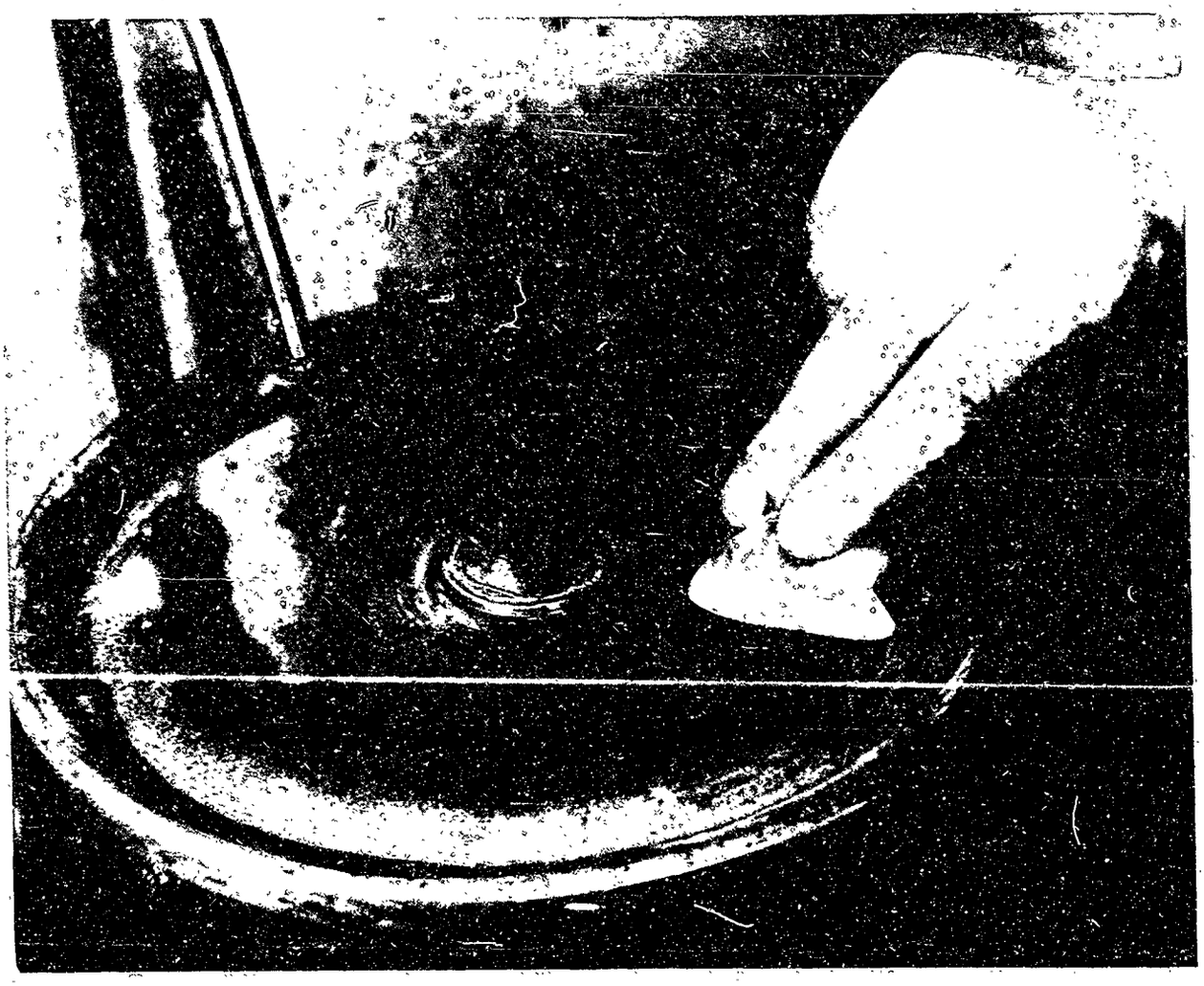

Universal Camera Corporation

Figure 424.—Machine Beveling a Prism Blank Using an Aluminum Oxide Grinding Wheel.

Diagonal End (Bevel).—Any right-angle prism may be used as a 'dummy' for a support in this operation. The end 45° face of the abbe prism blank, and one of the 90° faces of the dummy are heated and united with beeswax as shown in Figure 426. The bottom 90° face of the abbe can then be located perpendicular to the blocking plate. This procedure insures that both end surfaces will be parallel.

The combination of the abbe and right-angle or dummy prism is mounted on a blocking plate and the overall length is ground. Markers cannot be used in this operation, therefore the progress of the grinding must be checked by measuring through the block.

After grinding, the block is heated sufficiently to melt the wax which is holding the abbe-right-angle prism combination to the plate but not enough to loosen the combination itself.

Diagonal 45° Face.—Next the prism combination is mounted in a 90°-angle plate so that the diagonal 45° face is located as shown in Figure 427. As the grinding of the diagonal 45° face progresses, the width of the bevel at the 45° angle, formed by the diagonal 45° face and the side 90° face is measured with a micrometer depth gage. To insure parallelism during the operation, the four markers (prism combinations spaced equally around the edge) are measured through the block with a microm-

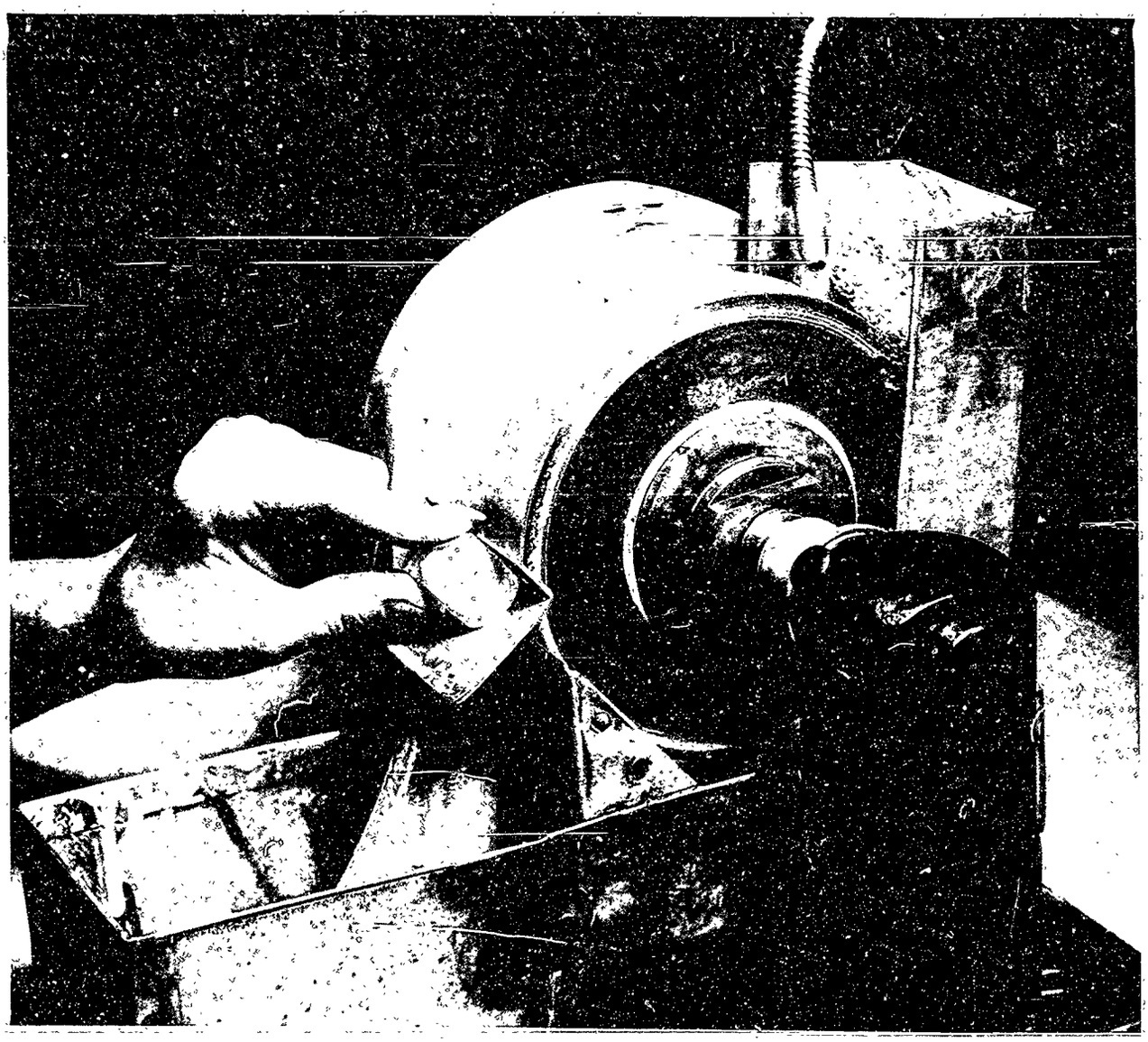

May-Oil Burner Corporation

Figure 425.—Machine Beveling a Prism Blank Using a Sintered Diamond Wheel.

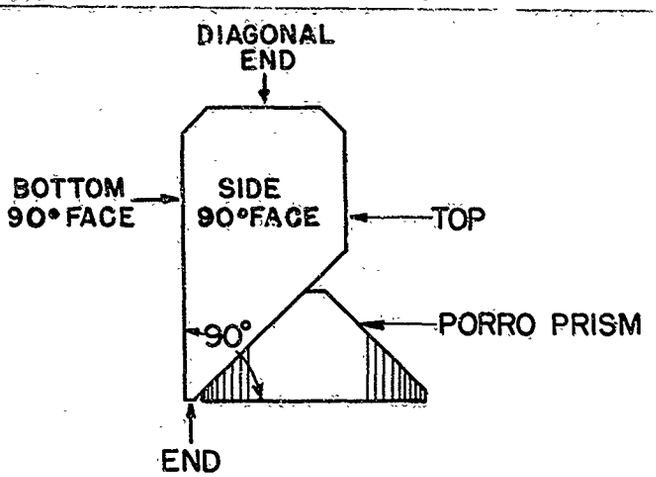

Figure 426.—Abbe Prism Blank Combined with a Right-angle Prism.

eter. The first correct overall 'through-the-block' measurement obtained is used as a reference for each successive block of work, *i.e.*, it is not necessary to check the width of the bevel c ce this reference measurem nt on the first block of prisms has been established. At the completion of grinding the diagonal 45° face, each prism combination is removed from the block and the dummy is separated from the abbe.

End 45° Face (Second Grind).—The processing of the end 45° face is identical with that for the diagonal 45° face.

Corners.—One corner of the prism blank is formed at the intersection of the bottom 90° face, the side 90° face, and the diagonal 45° face by removing the volume of glass as shown at A, B, and C in Figure 428. This corner is ground parallel to the end 45° face, the length of AC or CB being ¼ inch. Length CD (= 0.707 x 0.25 inch) is subtracted from the overall length CE to determine the dimension DE, to which all four corners of the block are then ground.

Finally the blank is mounted in a 90°-angle plate so that the bottom 90° face rests against one face of the V-plate and the side 90° face is perpendicular to both channel faces. The second corner is then removed as in the pre-

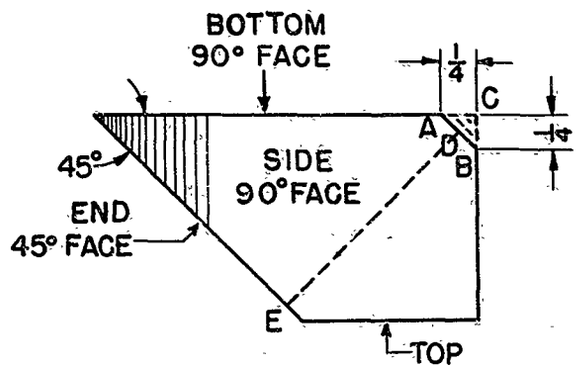

Figure 428.—Abbe Prism Blank with One Corner Ground Off.

ceding operation and as illustrated in Figure 429.

End (Radius).—If the radius of the blank is not specified on the drawing, it is assumed to be a semicircle. This operation is performed by attaching brass 'stocks', whose diameter is equal to the minimum thickness of the prism

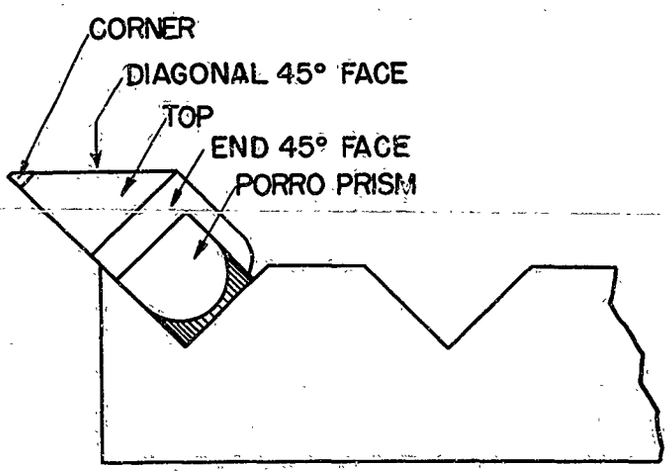

Figure 427.—Abbe Prism Blank with Dummy Right-angle Prism Mounted in a V-plate for Grinding Diagonal 45° Face.

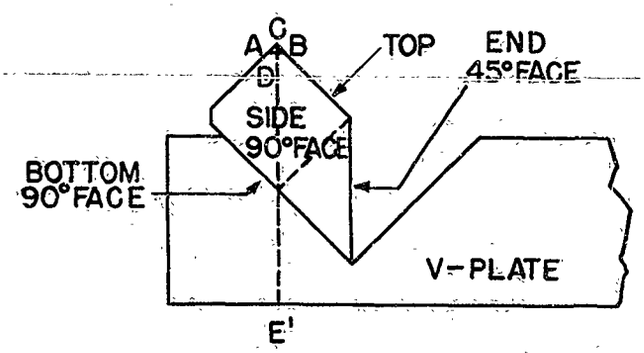

Figure 429.—Abbe Prism Blank Mounted in a V-plate for Grinding Second Corner.

to the bottom 90° face with beeswax so that the edge of the stock coincides with the 'flat' of the end bevel. The excess glass is then removed on the mills with #220, FF, and finally FFF abrasives. The cylindrical end surface formed by grinding the radius should be perpendicular to the bottom 90° face. The stocks are then heated and removed.

Correcting the Angles.—FFF abrasive is used to correct the angles. The bottom 90° face is ground perpendicular to the side 90° face. Then, using the side 90° face as a starting point, the diagonal 45° face is corrected to a 45° angle. Still using the side 90° face the diagonal 45° face is made perpendicular to the bottom 90° face. Using the bottom 90° face as a reference, the end 45° face is corrected to a 45° angle. Then the end 45° face is corrected to a right angle with the side 90° face.

Edges.—All sharp edges are beveled to the specified width except the two 135° angles formed between the end 45° face and the top, and the diagonal 45° face and the side.

Amici Roof Prism

For designation of surfaces and angles on an amici roof prism, refer to Chapter 1, Figure 108. The roof angle must be 90° within two seconds of arc since a greater error would cause the image to be doubled when the prism is used with magnification. Figure 430 illustrates some of the errors of angle in processing an amici prism. The tolerances due to these errors often depend on whether they occur singly or in combination.

The pieces are processed in the same manner as other right-angle (*e.g.*, porro, and right-angle reflecting) prisms, up to and including the operation of squaring the stack.

Ends.—Stacks of prism blanks are mounted on a blocking plate and the ends are ground to proper size.

Roof Faces.—Next they are removed from the blocking plate, separated, and then mounted in a 90°-angle plate as shown in Figure 431(a), and the first roof faces of the prism blanks ground. A sample through-the-block calculation to check the progress of the grinding is shown in Figure 431(b). The blanks are removed from the blocks, cleaned, and remounted for grinding the second roof faces.

Edges.—The next step is to bevel all the edges with FFF abrasive except the roof edge and the two 135°-angle edges which are formed by the roof faces and the sides. It is not necessary to bevel the edge formed by the 90° base angle since it is ground off later to form the 'top'. The prism blanks are ready now for hand correction.

Correcting the Angles.—Four 60° angles are formed by the two roof faces with the adjacent 90° faces. Using a 60°-angle bar gage for checking, each roof face is hand corrected with #303 abrasive with the adjacent 90° faces. These four 60° angles must be correct because it is essential that the roof edge be parallel to both the top and the 135°-angle edges.

The 90° angle of the roof is then corrected, remembering that the edge formed by the two roof faces must be sharp and unbroken. The various operations are the same as described in Chapter 15 for correcting 60° and 90° angles. Skill in the use of gages during grinding is of great importance if the final hand correction (after polishing) is to be satisfactory.

Top.—To form the top, the prism blanks are mounted with beeswax, roof faces down, in a 90° V-plate. The measurement for height is made through the block. When the correct height has been reached the blanks are removed, cleaned, and the top edges are beveled. They are now ready for fine grinding and polishing as described in Chapters 11 and 15.

Leman Prism

A leman prism is another type of roof prism which has been described in Chapter 1 (see Figure 109).

Sides (First Grind).—The sides of rectangular pieces of glass of approximately the finished size are ground parallel, as shown in Figure 432(a), and such that the distance is 0.100 inch greater than the finished thickness. This allowance will be required when the roof is centered in a later operation.

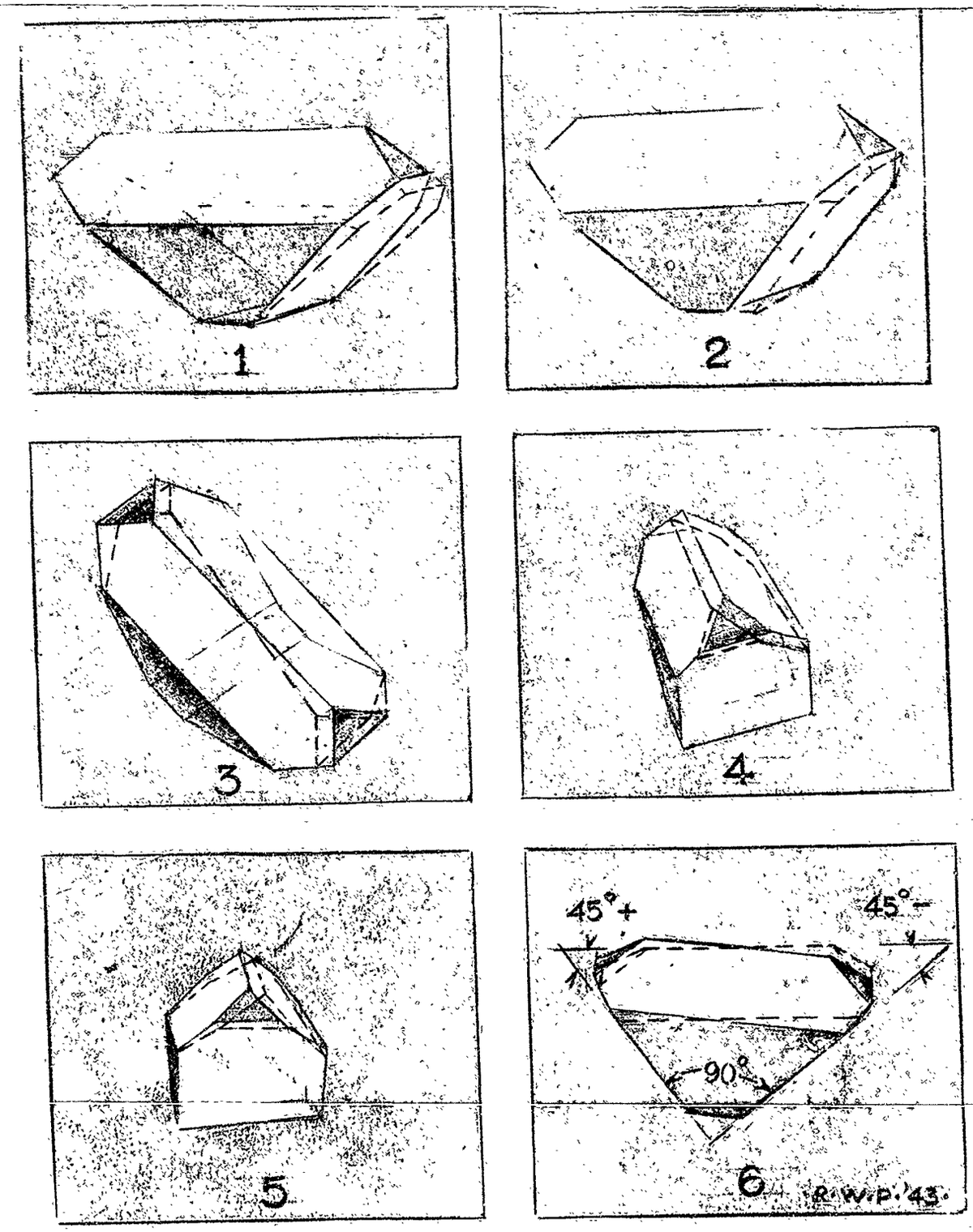

Drawing by Russell W. Porter

Figure 430.—Angular Errors in Processing Amici Prisms.

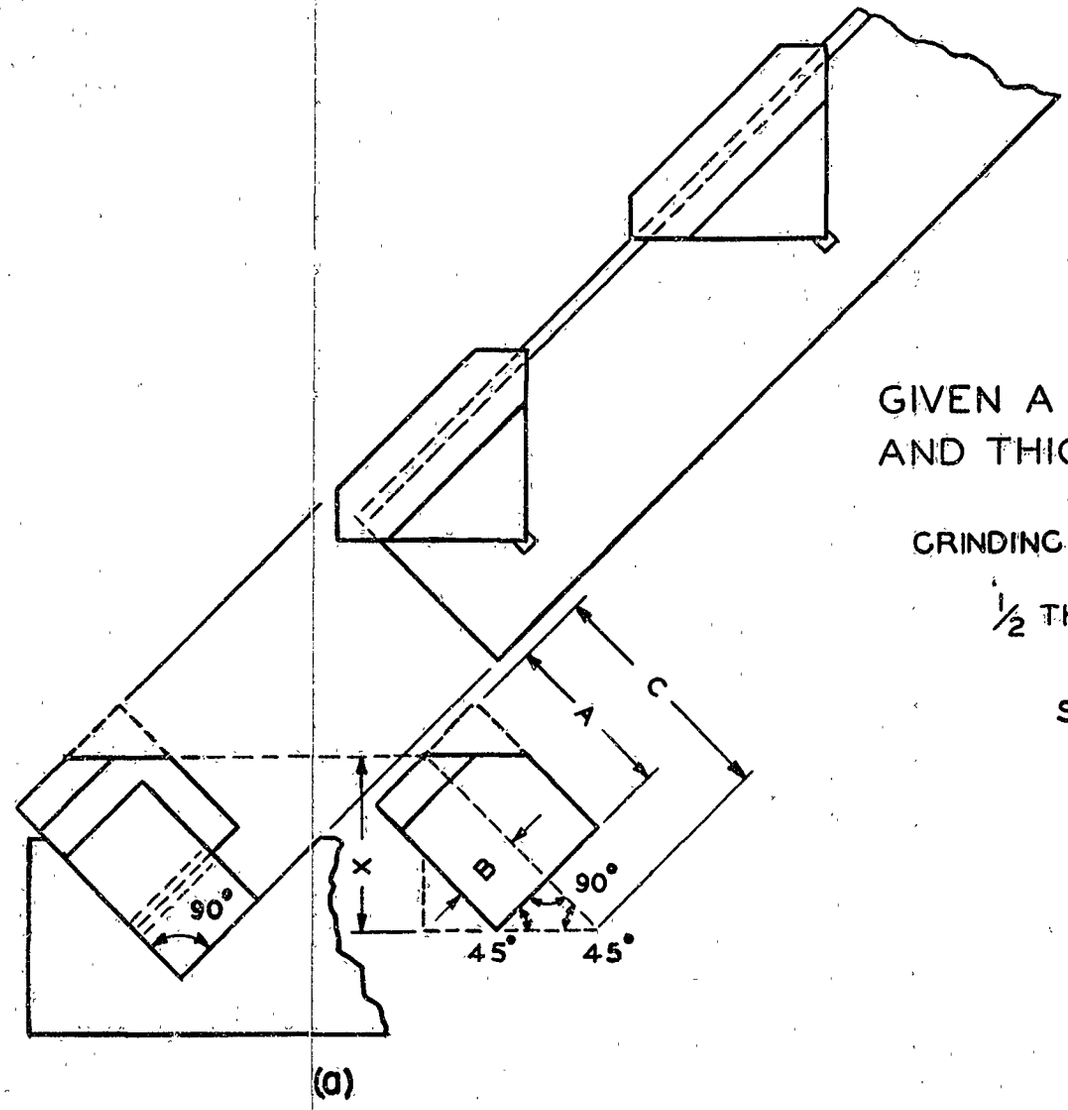

GIVEN A PRISM WITH HEIGHT = 1.000"
AND THICKNESS = .866"

HEIGHT	= 1.000	
GRINDING ALLOWANCE	= 0.015	
SUM	= 1.015	= A
½ THICKNESS	= 0.433	= B
A+B	= 1.448	= C

$$\text{SIN } 45^\circ = .707 = \frac{X}{1.448}$$

$$X = .707 \times 1.448 = 1.024$$

(b)

Figure 431.—Amici Prism Blanks Mounted in a V-plate for Grinding Roof Faces.

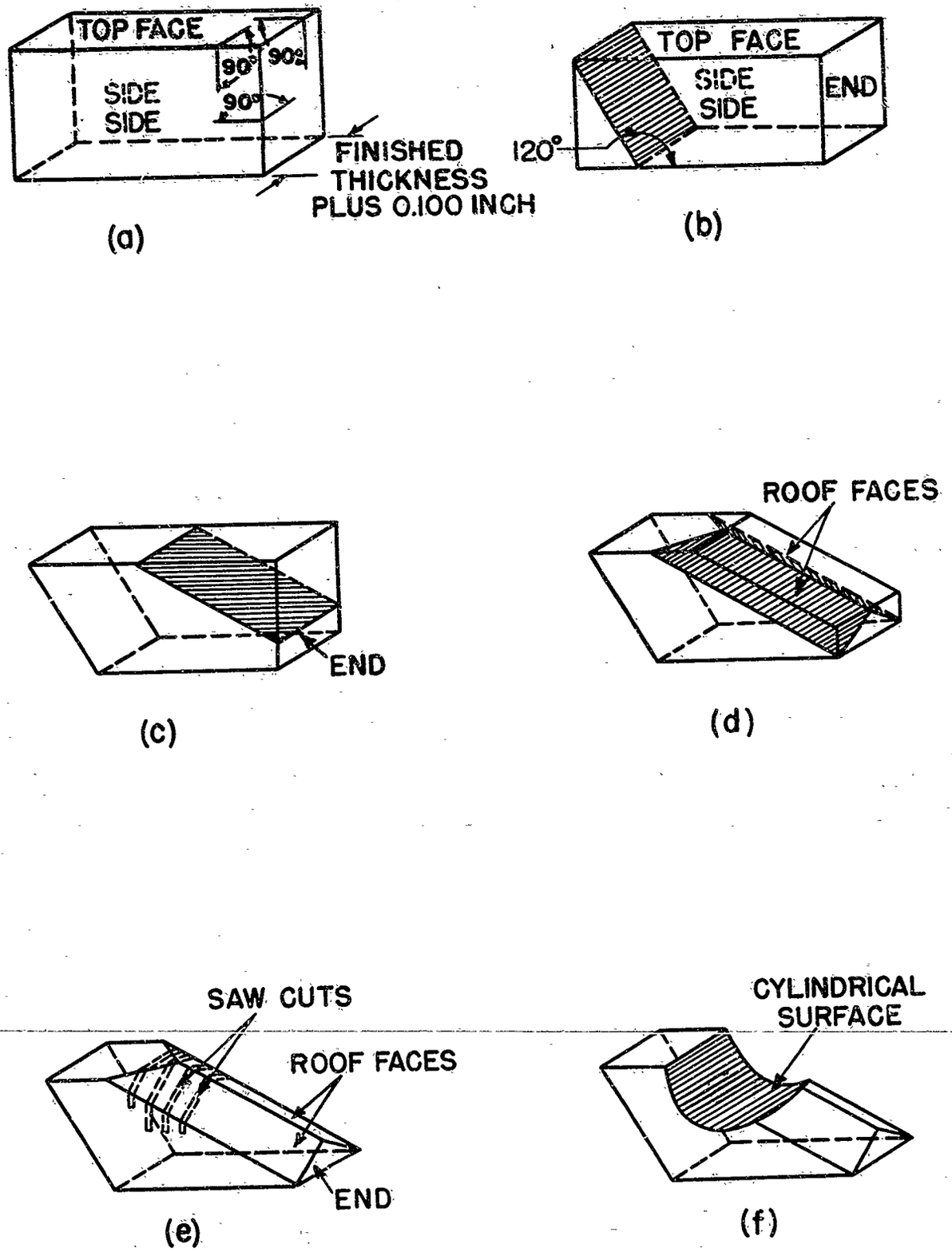

Figure 432.—Steps in Grinding a Leman Prism from Slab Glass.

Top Face and End.—After stacking the sides of four pieces together, one exposed side is chosen as a reference surface and marked with a lead pencil. Two surfaces of the stack which are adjacent to each other are then ground by hand until they are square with the reference surface (side) and with each other. The larger of these stack surfaces is the top face, and the smaller is the end of the prism as shown in Figure 432(a).

Bottom Face.—After squaring, the top faces in the stack are mounted on a blocking plate and the bottom faces are ground parallel and at the required separation.

Angle Face.—The stacks are then mounted on a 30-60-90°-angle plate with the top face against the 60°-angle side of the fixture and the angle face is ground until it makes 60° with the top face. The resulting surfaces and the position of the blanks in these fixtures are shown in Figures 432(b) and 432(a) respectively.

Roof Faces.—The stacks are blocked in a 120°-angle plate and the surface shown by the shaded plane in Figure 432(c) is ground. When this grinding has been completed, the stacks are heated and the pieces separated. It should be noted, however, that this last grinding operation may be omitted and the work can proceed directly to grinding the roof faces.

The method of grinding the roof angle on a leman is similar to that used for the amici roof prism. Both are mounted against inserts in a 90°-angle plate for the grinding operation. In the case of the leman the inserts are cut to a 120° angle rather than the 90° angle used for the amici.

Each prism blank is held in an insert with beeswax, and the first roof face as shown in Figures 432(d) and 433(b) is ground.

Then the blanks are removed and reblocked with the end, Figure 432(c), facing in the opposite direction, when the second roof face, Figure 432(d), is ground.

First Side (Second Grind).—After the prism faces have been polished completely and the roof faces hand corrected, it is necessary to remove the extra 0.100 inch of thickness and, at the same time center the roof, that is, remove the extra thickness in such a way that the two roof faces will be of equal width after the operation has been completed. In preparing to do this, the width of each roof face is measured with a micrometer from the 135° angle edge of each roof face to the sharp roof edge. (See Figures 434 and 435.) Next, twice the amount that the roof edge is off center is determined by multiplying the difference between the widths of each roof face of a prism by 0.707. Then the amount that must be ground from the side that is adjacent to the wider of the two roof faces is equal to the amount that the roof edge is off center (half of the amount just obtained) *plus* 0.050 inch. It will be seen from this calculation that if the roof edge is already centered accurately, it will be necessary to grind 0.050 inch from each side in order to bring the prism to the proper thickness.

After the amount that must be ground from the first side (the side adjacent to the *wider* roof face) has been determined, the prisms are mounted on the blocking plate with the side adjacent to the *narrower* roof face of each prism placed in contact with the plate. In locating the prisms on the blocking plate, they are graded from the outer edge of the plate to its center according to the amount of glass to be removed during this grind; the prisms requiring the removal of most glass being placed as the outer edges. Four of these prisms are placed so as to overhang the edge of the blocking plate and serve as markers.

All polished faces are given a protective coating before grinding. As each prism is ground the proper amount, as determined by measuring the markers, it is removed from the block. If the prisms have been arranged properly, those that remain at any time will be outermost on the plate and thus will keep the block balanced.

Second Side (Second Grind).—To grind the second side the prisms are reversed and remounted on the block with the thicker ones outermost. All prisms are then ground to the finished thickness simultaneously. FFF abrasive is used to grind each side to the final dimension.

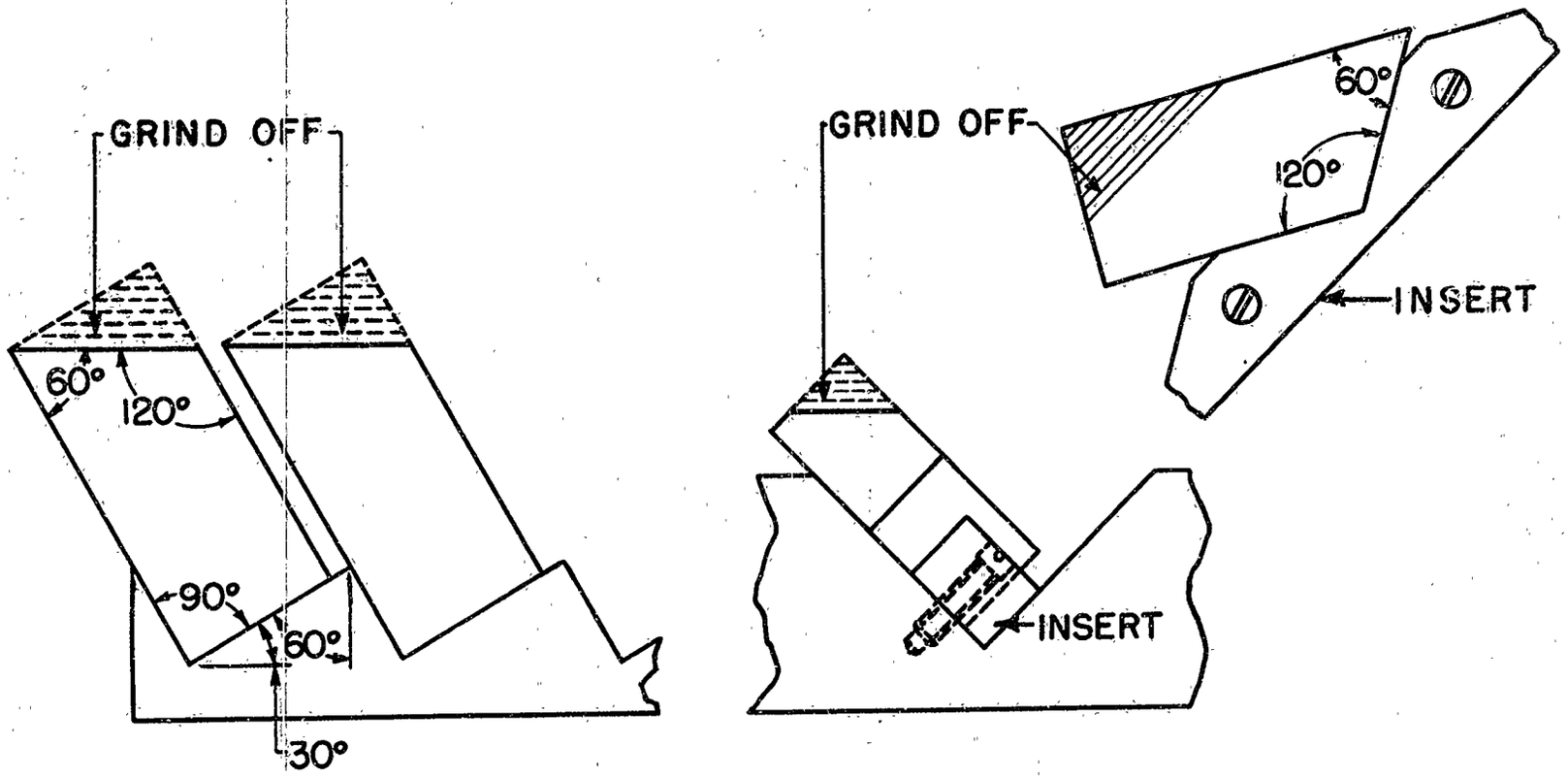

(a) Angle Face

(b) First Roof Face

Figure 433.—Position of Rectangular Glass Pieces for Grinding the Angle Face and Roof Faces of a Leman Prism.

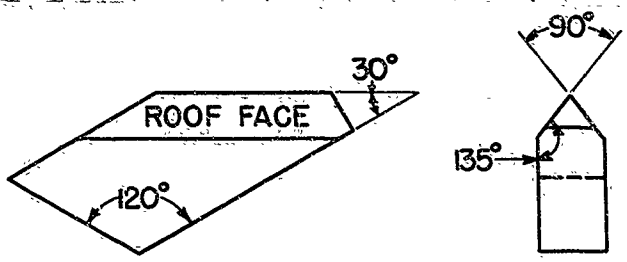

Figure 434.—Angles on a Leman Prism.

Cylindrical Surface.—A small 120° V-block is used to hold the prisms when cutting and grinding the cylindrical surface. The block channel is lined with tissue paper to keep the polished surfaces from being scratched and a stack consisting of 8 or 9 prisms waxed together, with a leman prism, already grooved, added at each end to serve as a retainer, is mounted in the channel using beeswax as the adhesive. Using the two grooved lemans as guides, a mechanical saw (see Chapter 3) is used to make a series of cuts in the glass, Figure 432(e), and the glass is chipped out by wedging a steel scale between the saw cuts. Still using the prisms at each end as guides, the cylindrical surface is finished with FFF abrasive on a lathe with a round steel bar of the same radius as the groove (see Figures 432(f) and 436).

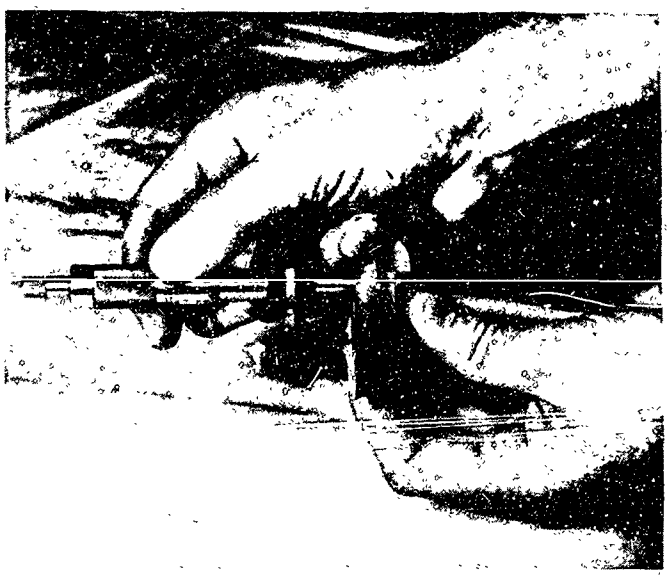

Figure 435.—Measuring the Width of a Leman Roof Face with a Micrometer.

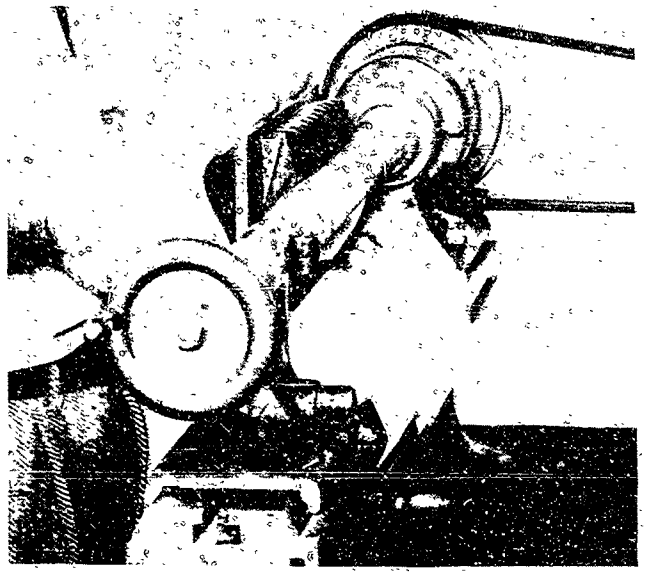

Figure 436.—Grinding the Cylindrical Surface on Leman Prisms.

The prisms are removed, separated, and cleaned; then each is checked with a profile gage as shown in Figure 437. If a prism does not fit the gage, the projecting area is marked with a pencil and the excess glass is removed by hand with FFF abrasive on the same rotating steel bar.

Cylindrical Edge.—The sharp edges of the cylindrical surface on each prism are beveled individually using the same steel bar fixture with FFF abrasive. Great care must be taken to bevel only a very small area on the polished surface.

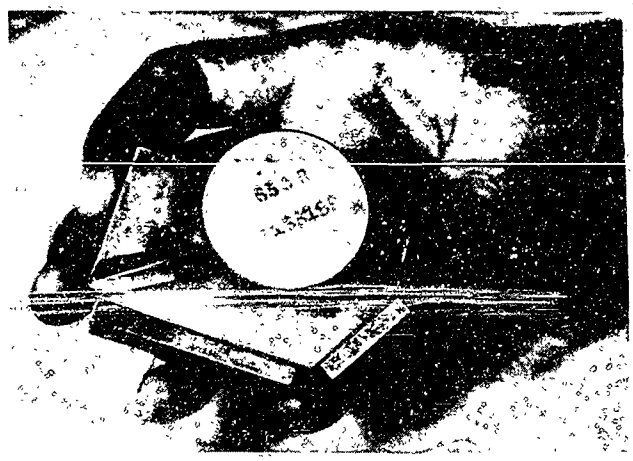

Figure 437.—Testing the Cylindrical Surface of a Leman Prism with a Profile Gage.

Dove Prism

Inclined Faces and Hypotenuse.—The three faces of a stack of dove prisms are processed in the same manner as a porro prism. Then the prisms are tested for definition and angular errors and any error is corrected by regrinding at least one of the faces. This should be done before the top of the stack is ground. When slab glass is used, the apex of the 90° angle is not beveled because it is used as a reference point for measuring the distance from each end of the apex to the hypotenuse with a micrometer. These distances, when compared with each other, should not vary more than 0.0005 inch in order to insure pyramidal accuracy.

Correcting the Pyramidal Angle.—While still stacked the prism blanks are blocked, fine ground and polished, and then checked for pyramidal error. For this check see Chapter 24. The correct pyramidal angle of right-angle prisms may be obtained even though the two 90° faces are not perpendicular to the base side, since an error of side angles can be neutralized when the hypotenuse is ground.

The algebraic sum of the errors of all three angles referred to the reference side equals the pyramidal error. For example, if the errors of the adjacent 90° faces are + 3 and − 1 with the reference side, and if the error of the hypotenuse is − 2, then the algebraic sum of these three is zero. If, however, the error of one of the adjacent 90° faces is + 9 instead of + 3, the algebraic sum of these three faces would be + 6 which would be the pyramidal error. The prisms may be placed in a 90°-angle plate for correction, or the work may be done individually by hand. In either case a fine abrasive is used.

Top.—The polished faces are protected with masking tape and the tops are removed either by grinding or sawing. In the latter method, which is the faster, the prism is cut so that it is 0.050 inch over the finished dimension. In either case it is finished by grinding with progressively finer sizes of abrasives. When this operation has been finished the stacks are taken apart and the prisms are cleaned.

Groove.—The prism faces are again protected by covering them with masking tape, and the groove, illustrated in Figure 112, is ground into the top by either of two methods.

In the first method, a grooving tool is held in an ordinary drill press, and the height of the tool from the surface of the drill-press table is adjusted so that the groove cut into the prism will be centered properly as shown in Figure 438. The prism is placed on its side with its top toward the tool. While #220 abrasive is applied to the tool, the prism is held firmly and brought into contact with the tool slowly, by hand. As the correct depth is approached, the groove is finished with FF abrasive.

The second method which uses a machine similar to that shown in Figure 439, is convenient for mass production. It is equipped with diamond-impregnated brass grooving tools mounted on a horizontal drive shaft. The prisms are held in fixtures and lowered over these tools.

Corners.—In one method for grinding the corners, the sides of the prisms are mounted with beeswax on a glass strip in a straight line, using either a straightedge or a line scribed on a table as a guide (see Figure 440). FFF abrasive is used in grinding each of the four corners to a 45° angle on a mill. In this way all four corners of a group of dove prisms may be ground with only one mounting operation. It is thus considerably quicker than other methods, but requires considerably more skill on the part of the operator.

Another method is to grind the corners with a carborundum or a diamond wheel using a fixture as illustrated in Figure 441.

Penta Prism

Sides and 90° Faces.—If slabs of glass are used in the manufacture of penta prisms, instead of pressed blanks, the only extra operation necessary is the sawing of the slab, otherwise, the first operations are to grind the sides parallel, and then to stack and square.

End.—After squaring, the 90° faces are mounted in contact with the channel surfaces of a 90°-angle plate, as shown in Figure 442(a). The end is ground parallel to the base of the plate and to the proper depth.

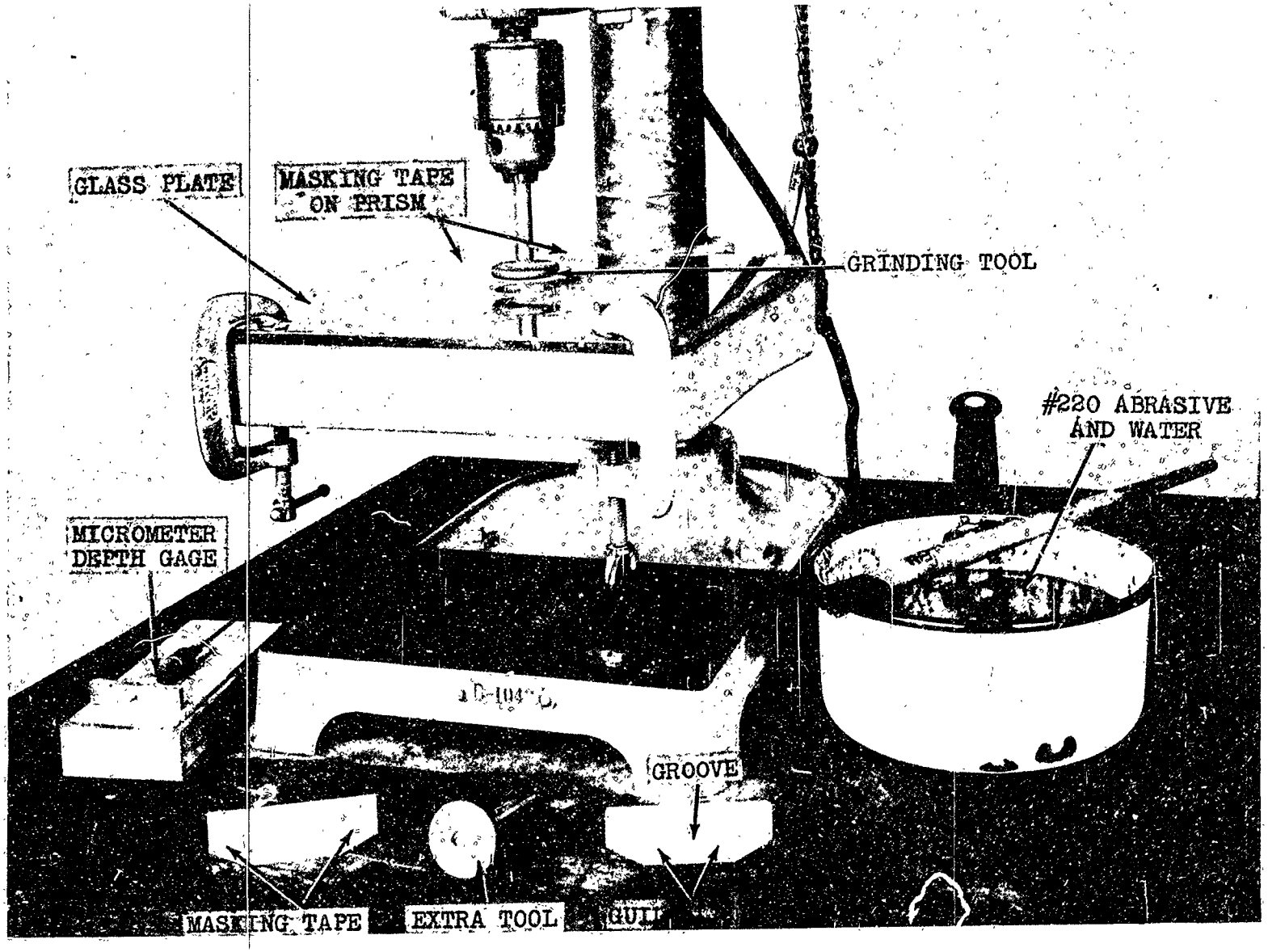

Figure 438.—Grinding the Groove in a Dove Prism on a Drill Press.

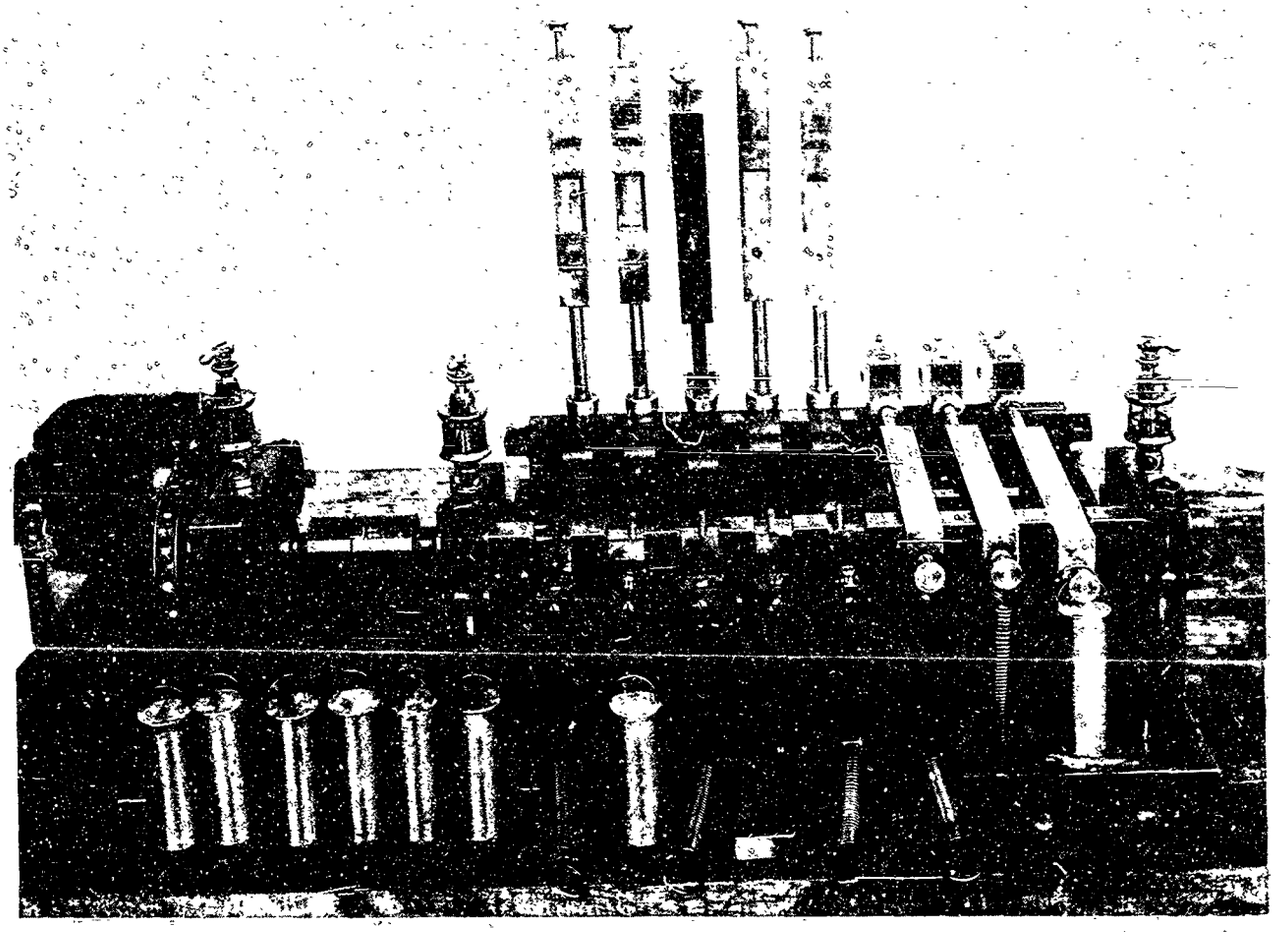

Figure 439.—Machine for Grinding the Grooves in Eight Dove Prisms at Once.

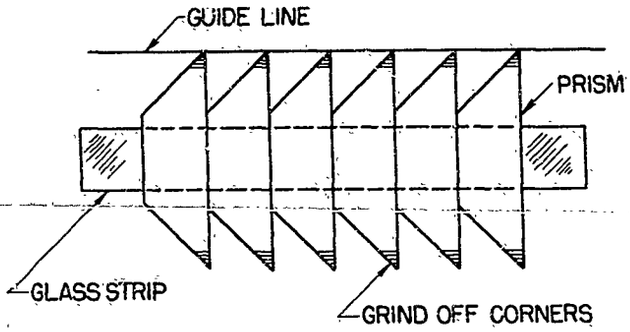

Figure 440.—Dove Prisms Mounted on a Glass Strip for Grinding Corners on a Mill.

Silvered Faces.—After removing the stacks from the 90°-angle plate, they are then mounted in the special penta prism angle plate shown in Figure 442(b). When mounting the prism blanks in this special plate, it is tilted so that the prisms will be held by gravity in the plate and will not move out of position until the wax is cool and firm. The block is ground until the first silvered face reaches the required length, and a through-the-block measurement is taken to this face which is then used for subsequent blocks. The angle formed in this operation is 112° 30′. Next the stacks are remounted and the second silvered faces are ground in a similar manner.

Critical Angle.—The relation of all the angles of the finished prism to the reference surface (base slab) is shown in Figure 113. From this figure it will be seen that the 90° faces are at right angles to each other and to the base side. Each 90° face is at 112° 30′ with its adjacent silvered face, and these silvered faces are also at right angles with the base side. Since the second side is parallel to the first (base) side, the 90° faces and silvered faces must all be at right angles with both

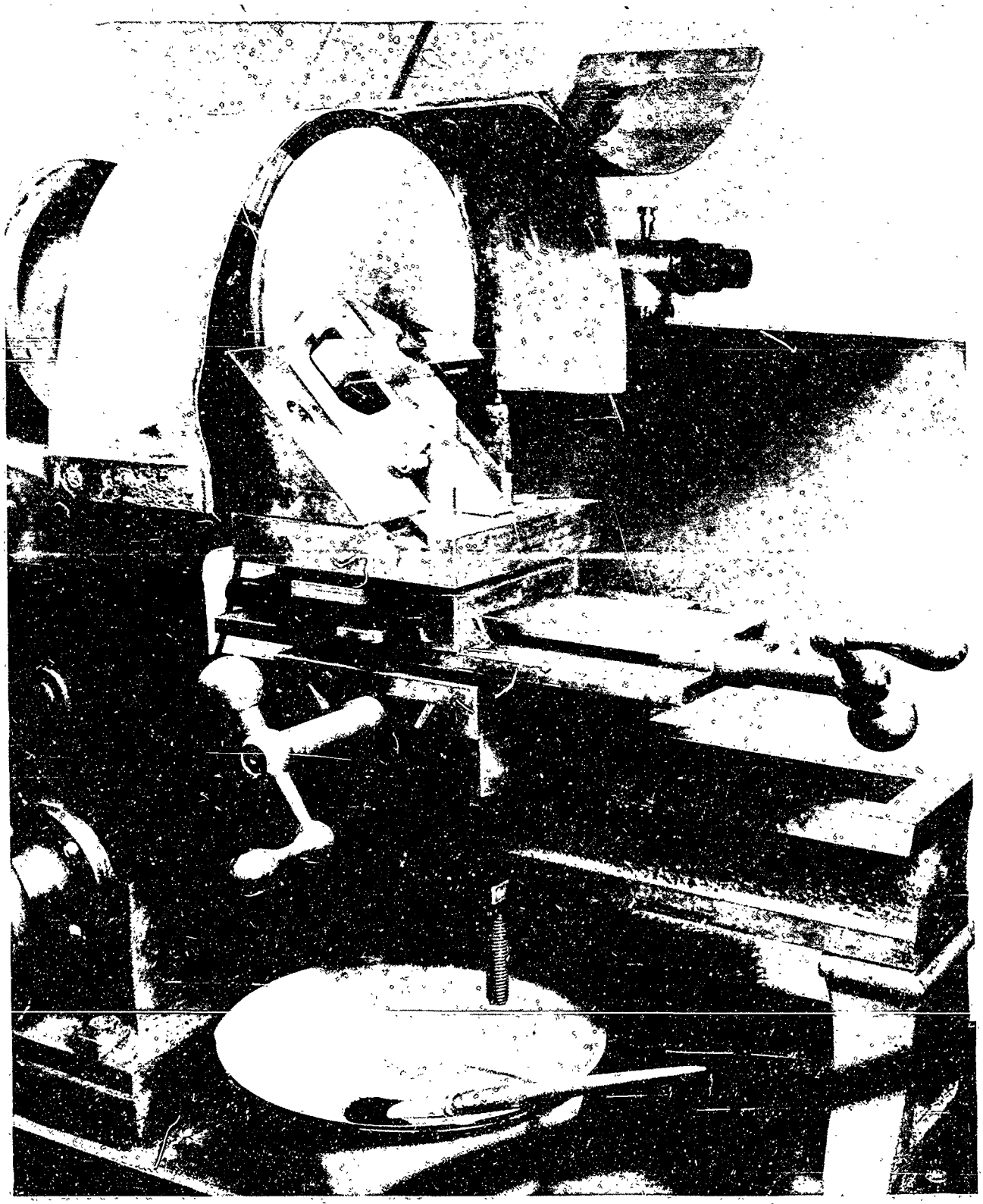

Ordnance Instrument Corporation

Figure 441.—Grinding Corners on Dove Prisms.

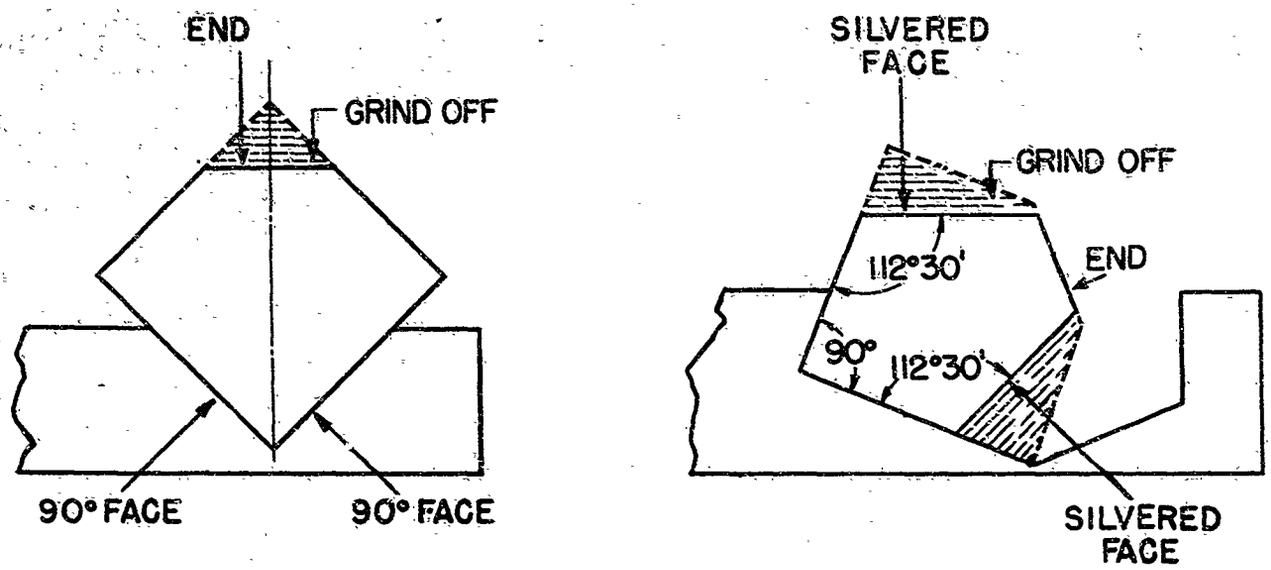

Figure 442.—Positions of a Squared Stack in Angle Plates for Grinding Ends and Silvered Faces of Penta Prisms.

sides. The 45° angle formed by the continuation of the silvered faces is the most critical angle.

Correcting the Critical Angle.—After completing the foregoing operations, the 45° critical angle is correct theoretically; however, a slight error in this angle may have been introduced as a result of workmanship, the gage, or the fixture used. If a small error does exist in one of the 112° 30′ angles, the prism can be kept in balance by splitting the error between the two 112° 30′ angles. When the hand correction of the 90° angle is complete, all the sharp edges and corners are beveled.

Ocular Prism (Height Finder M1)

The surfaces and angles of a 'left' ocular for an M1 Height Finder are shown in Figure 114. The operations described below are the same for both 'left' and 'right' ocular prisms except for the final step when the 45° angle is ground. The position of the prism blank in a special left and right V-plate determines whether the blank is to become a left or a right ocular prism.

90° Face, Top, End, and Slanting Face.—After the 90° face and top of each oblong piece have been ground parallel and to thickness, the pieces are then stacked and squared. At the completion of this squaring, the end and slanting face of each piece will have been ground.

End Surface.—The ends of the stacks are mounted on a blocking plate and the opposite surfaces (end surfaces) are ground parallel and until the stacks are the proper height.

Side.—The stacks are mounted in a special 80°-angle plate with the ends in contact with the 80° surfaces of the angle plate, as shown in Figure 443. The distance to the intersection of the end with the slanting face should be calculated before grinding the 80° angle (side).

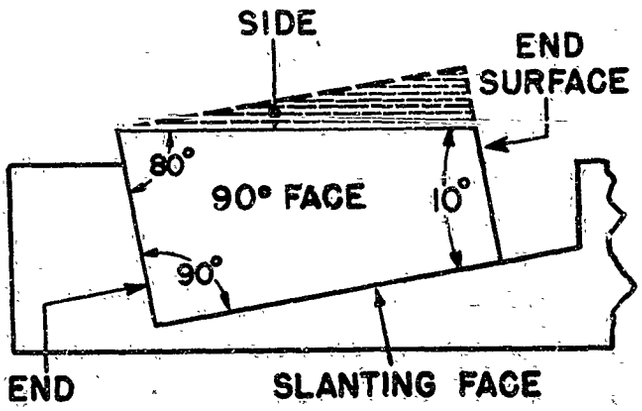

Figure 443.—Height Finder M1 Ocular Mounted in Angle Plate for Grinding the Side.

Silvered Face.—After grinding the side, the slanting face and end surface are butted down with beeswax into a V-plate as shown in Figure 444, and the silvered face of the prism blank is ground. The blanks in each corner of the V-plate extend over the edge in order to permit the measurement of their ends. This establishes the thickness through-the-block to which other blocks of similar work are ground.

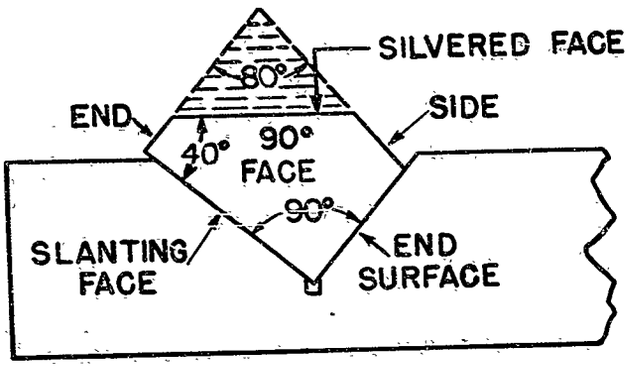

Figure 444.—Height Finder M1 Ocular Mounted in V-plate for Grinding the Silvered Face.

Correcting the Angles.—The blanks are removed from the plate, cleaned and the silvered face is hand corrected to a 40° angle with the slanting face, on a small 8-inch mill. Next the 90° face is made perpendicular to the slanting face and the silvered face is made perpendicular to the 90° face as shown in Figure 114.

45° Face.—The 90° faces and ends of prism blanks are next mounted in the special angle plate shown in Figure 445. This plate contains inserts which permit the blanks to be mounted in two positions so as to grind the 45° face, which differentiates between left and right ocular prisms. Grinding is continued until the precise length is obtained.

Correcting the 45° Angle.—The 45° face has to form both a 45° angle with the 90° face and also an angle of 97° 6′ with the slanting face. A protractor is used to establish the 97° 6′ angle on the first blank, an adjustable bar gage is then set on these faces and used for the remainder of the lot.

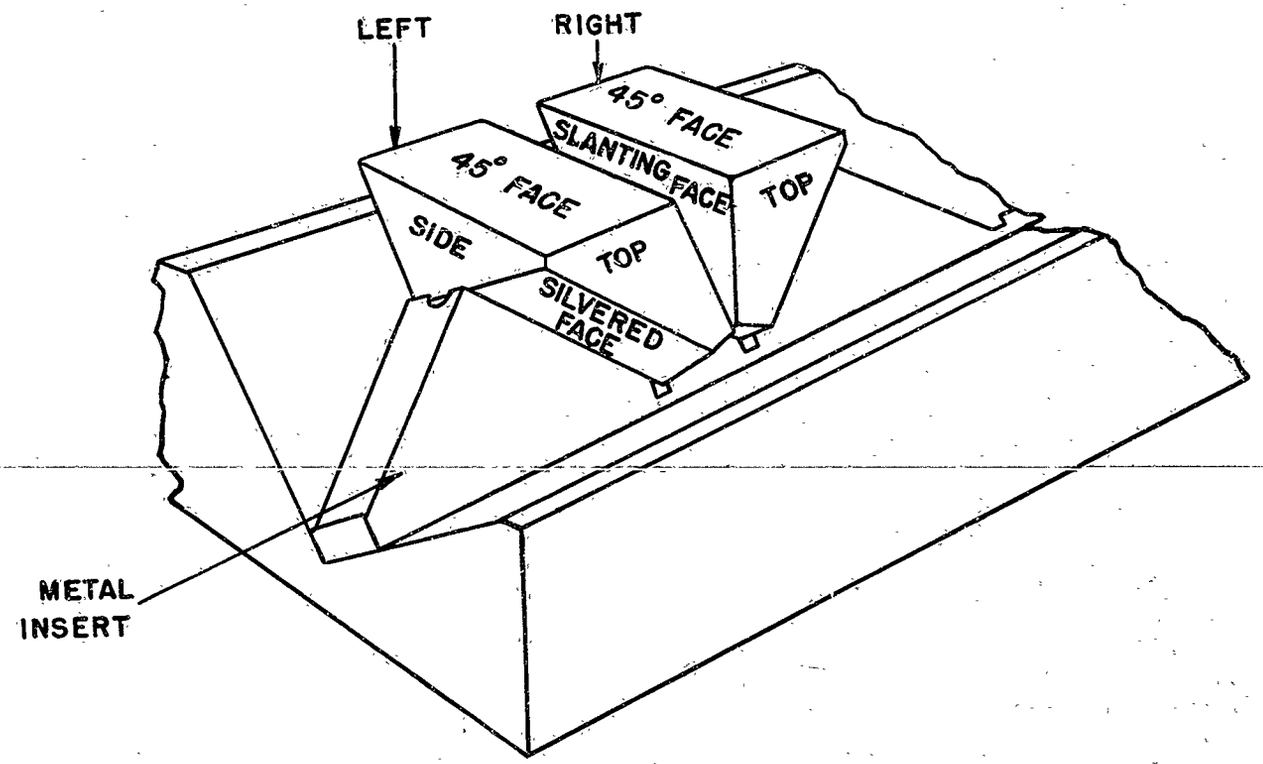

Figure 445.—A Pair of Height Finder M1 Oculars Mounted in Position on an Angle Plate After Grinding the 45° Faces to Make One Left and One Right Prism.

Ocular "A" Prism (1-m Range Finder M1916)

Sides, Bottom Face, Top, and End.—As with most prism types, the preliminary steps of grinding parallel sides, stacking, and squaring also apply to these prisms and are carried out in accordance with the particular dimensions specified.

45° Face.—The stacks are removed from the blocking plate and then heated on a metal table until the wax holding the pieces together is soft enough to permit the individual pieces of glass to slide on each other. At this point the glass stacks are ready for 'staggering'. The prepared stack is placed in a special glass staggering fixture with the base end of the stack pressed against the end of the glass corner, Figure 446. The angle, Y, of the staggering fixture is obtained from the following formula:

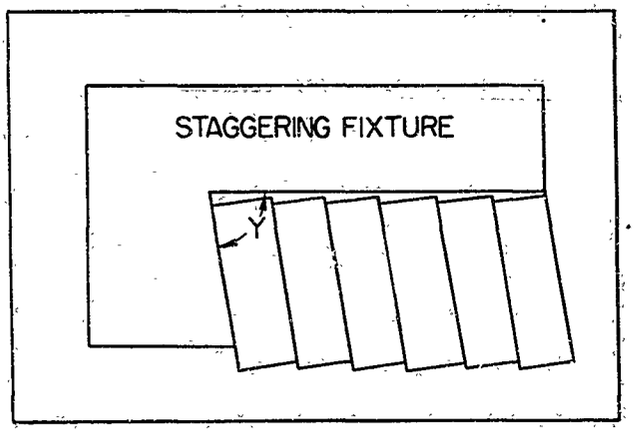

Figure 446.—Staggering a Stack of Ocular "A" Prism Blanks in a Glass Fixture.

$$Y = \text{arc cot } \frac{\cot B}{\sin A} \qquad (5)$$

where A = the acute angle between the bottom face and the inclined (usually 45°) face.

B = the angle between the side and the inclined (45°) face.

In the ocular "A" prism (see Figure 447), angle A is equal to 45° and B is 86° 28′; from this, the angle of the staggering fixture is:

$$Y = \text{arc cot}\frac{\cot B}{\sin A} = \text{arc cot}\frac{\cot 86° 28'}{\sin 45°}$$

$$= \text{arc cot}\frac{0.06175}{0.70711} = \text{arc cot } 0.08732$$

$$Y = 85° 0' 35''$$

After cooling, the stacks are removed from the staggering fixture and mounted in a 90°-angle plate in such a fashion that, to an observer looking in the direction indicated by the arrow from the eye in Figure 447, the stacks will be canted to the right. If, by error, the stacks are so placed that they appear canted to the left, the blanks would be ground with an angle of 93° 32′ rather than the desired 86° 28′.

After the stacks have been mounted correctly in the V-plate a through-the-block measurement is obtained. Then the 45° face is ground to the specified dimension, and at the same time parallel to the base of the V-plate. Next the block is heated enough to melt the wax holding the stacks in the V-plate but not enough to cause any shifting within the stacks themselves.

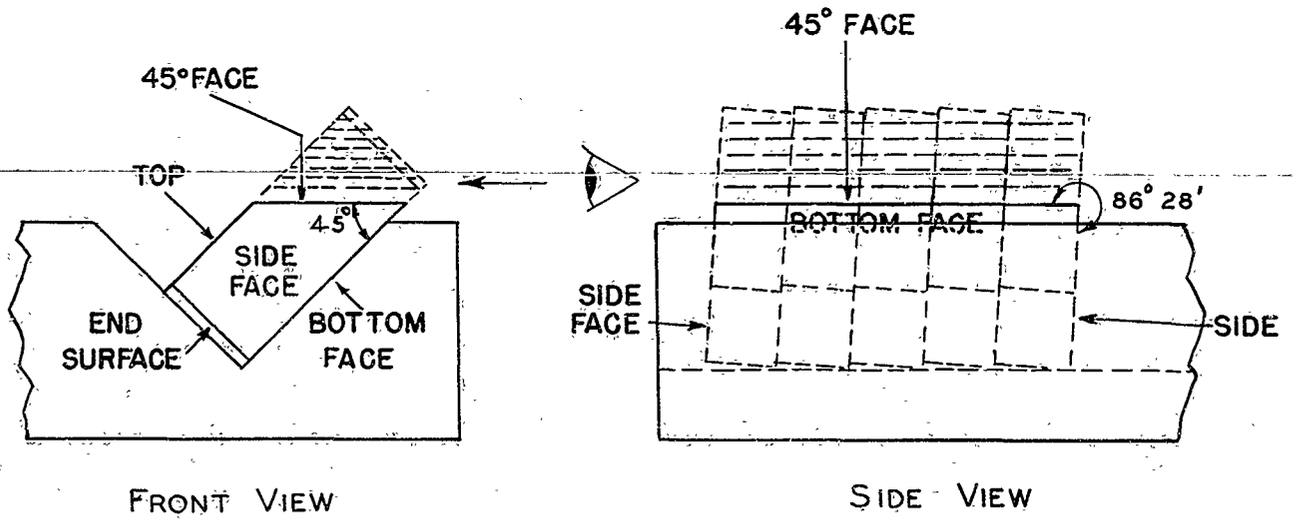

Figure 447.—A Staggered Stack of Ocular "A" Prism Blanks Mounted in a V-plate for Grinding the 45° Face.

Correcting the 45° Angle.—The stacks are removed and the 45° angle on each stack is hand corrected with FFF abrasive. During the hand correction, the bottom face is made perpendicular to the side and at the same time the 86° 28′ angle is corrected using a protractor.

25° Face.—After correcting the 86° 28′ and the 45° angles the prism blanks are separated and cleaned. The individual blanks are then mounted on a special 25°-angle plate with beeswax, the correct position being shown in Figure 448. The correct dimension for the through-the-block height of the 25° face will be attained when the proper width of this face is reached.

Correcting the 25° Angle. — The plate is heated, the prism blanks removed and cleaned, and the 25° angle corrected with FFF abrasive. As shown in Figure 115, the bottom face is made perpendicular to the 25° face and the 25° face is corrected to 25° with the side face.

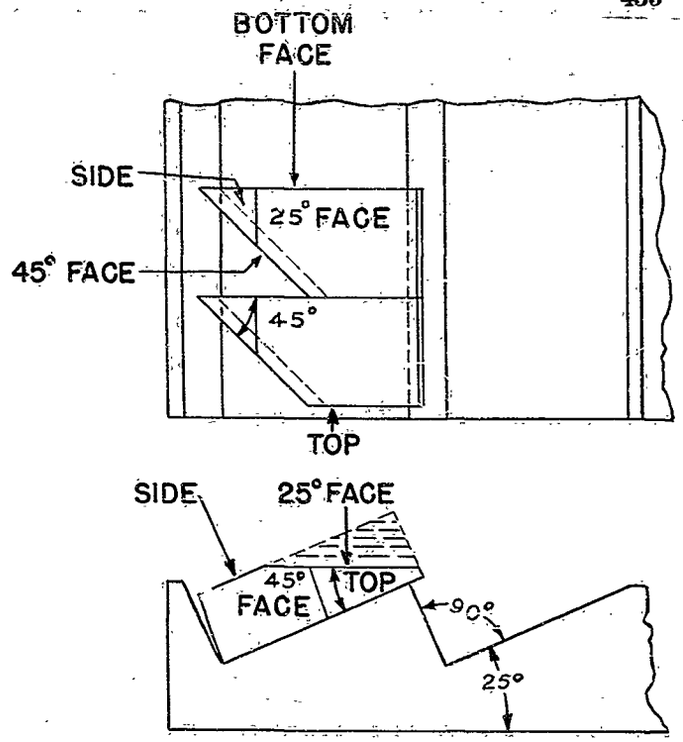

Figure 448.—Ocular "A" Prism Blanks Mounted in a V-plate for Grinding the 25° Faces.

CHAPTER 5

ROUGH GRINDING PRISMS WITH AUTOMATIC MACHINERY

	Page No.
Types of Surface Grinders.	504
(a) Horizontal-spindle Reciprocating-table Surface Grinder.	504
(b) Horizontal-spindle Rotating-table Surface Grinder.	504
(c) Vertical-spindle Reciprocating-table Surface Grinder.	506
(d) Vertical-spindle Rotating-table Surface Grinder.	506
Vertical-spindle Rotating-table Surface Grinder.	506
Operation.	506
Description.	510
Grinding Wheel.	510
Wheel Dresser for Silicon-carbide Wheels.	510
Feed.	510
Work Table.	511
Magnetic Chuck.	512
Caliper Attachment.	512
Structure and Function of the Grinding Wheel.	513
1. Vitrified Products (Clay or Glass).	513
2. Synthetic Resin Products (Resinoid).	513
3. Rubber.	513
4. Metal.	513
Preparing and Mounting the Grinding Wheel.	516
Silicon Carbide.	516
Diamond.	516
Wheel Life and Surface Finish.	516
Wheel Speed.	516
Work Speed.	516
Area of Contact.	517
Infeed.	517
Height of Work.	517
Anchorage.	517
Adhesive.	518
Abrasive Grit.	518
Chuck Speed.	518
Dressing the Wheel.	518
(a) Metal-bonded.	518
(b) Resinoid-bonded.	518

	Page No.
Coolant.	518
Quantity of Coolant.	518
Pressure of the Coolant.	519
Fixtures.	519
Methods of Mounting Small Fixtures on a Magnetic Chuck.	520
Production of Porro Prisms by Various Manufacturers.	526
Anchor Optical Corporation.	526
90° Faces and First Side.	526
Second Side.	527
Hypotenuse.	527
May Oil Burner Corporation.	527
Hypotenuse.	527
90° Faces, Sides, and Top.	527
Bausch and Lomb Optical Company.	528
First Side.	528
Second Side.	528
Hypotenuse.	529
90° Faces.	529
Polaroid Corporation.	530
Sides.	530
90° Faces.	530
Hypotenuse.	531
Frankford Arsenal.	532
Sides.	532
90° Faces.	532
Slab Glass.	532
Pressings.	533
Hypotenuse.	533
Robinson–Houchin Optical Company.	533
Sides.	533
Hypotenuse and 90° Faces.	534
Ends.	534
Universal Camera Company.	534
Sides.	542
Top and 45° Corners on the Top.	542
Ends.	542

	Page No.
Optical Research Company.	543
Top and 45° Corners on the Top.	543
Eastman Kodak Company.	543
Sides.	543
Hypotenuse.	543
First 90° Face.	544
Second 90° Face.	544
Top and 45° Corners on the Top.	544
Production of Roof Prisms by Various Manufacturers.	544
Optical Research Company.	544
Sides and 90° Faces.	544
Roof Faces.	544
Top.	544
Naval Gun Factory.	545
Sides.	545
Eastman Kodak Company.	545
Konig Roof Prism.	545

Plane surfaces may be ground mechanically with far greater speed and economy than can be obtained by using the manual methods described previously. The machines used for this purpose are usually standard models of metal-surfacing machines with minor refinements. However, some special machines designed for semi-automatic quantity production have been used successfully.

The majority of ordinary grinding machines may be used for three types of grinding—'hogging', rough grinding and fine grinding—by varying the grade of grinding wheel used. In certain cases, it has been possible to pass from machine grinding directly to polishing. These machines are usually arranged, so that the work is mounted with wax on metal plates or fixtures which, in turn, are held by a magnetic chuck. An abrasive wheel, rotating at high speed, removes the glass at a rate four to twenty times greater than that obtained by the mills described in Chapter 4.

Any desired angle between prism or wedge surfaces may be obtained with a degree of accuracy dependent only on the care exercised in mounting and the accuracy of the fixture used. The basic fixtures are almost identical with those described in Chapter 4. Extensive use is made of fixtures by means of which two or more surfaces on a prism may be ground with a single wax-mounting operation, the fixture being repositioned on the magnetic chuck after each prism face is ground.

As in grinding metals, some type of coolant suitably diluted is necessary.

This type of grinding is not confined to prisms. Any flat work—glass slabs, filters, windows, wedges or reticles—may be ground to size economically, and lens blocks are often sized and 'spotted' as a preliminary operation to radius grinding.

Many makes and models of surface grinders have been used successfully in optical shops. This chapter describes in detail the operation of a Blanchard No. 11 Vertical Machine, and discusses coolants, abrasive wheels, dressings, speeds and feeds which apply to other makes as well.

While this chapter is devoted primarily to discussing the fundamental principles and practices associated with ordinary mechanical grinding machines, several of the many special-purpose machines that have been used for performing various particular grinding operations are also described.

TYPES OF SURFACE GRINDERS

Surface grinding machines used in optical shops fall into four classes. The principle of operation of each of these types is illustrated in Figure 501. In addition, curve generating machines (Chapter 8) may be used to grind plano surfaces.

(a) Horizontal-spindle Reciprocating-table Surface Grinder.—An example of this type is the converted milling machine shown in Figure 502. The milling cutter has been replaced with a diamond charged wheel which both rotates and oscillates, while the work is passing underneath it. The wheel rotates at 2100 rpm and oscillates 180 times each minute. The table travels 22 inches in 6 minutes.

(b) Horizontal-spindle Rotating-table Surface Grinder.—The Arter Model B Rotary Horizontal Grinder shown in Figure 503 is equipped with a round magnetic chuck which may be from 20 to 40 inches in diameter. The head oscillates, moving the wheel across the work. The grinding is done on the periphery of the wheel. The speed of the automatic feed, which moves the table upward, may be varied. Both the table and the head are operated hydraulically. The wheel rotates at 950 rpm, while the table speed is 420 rpm.

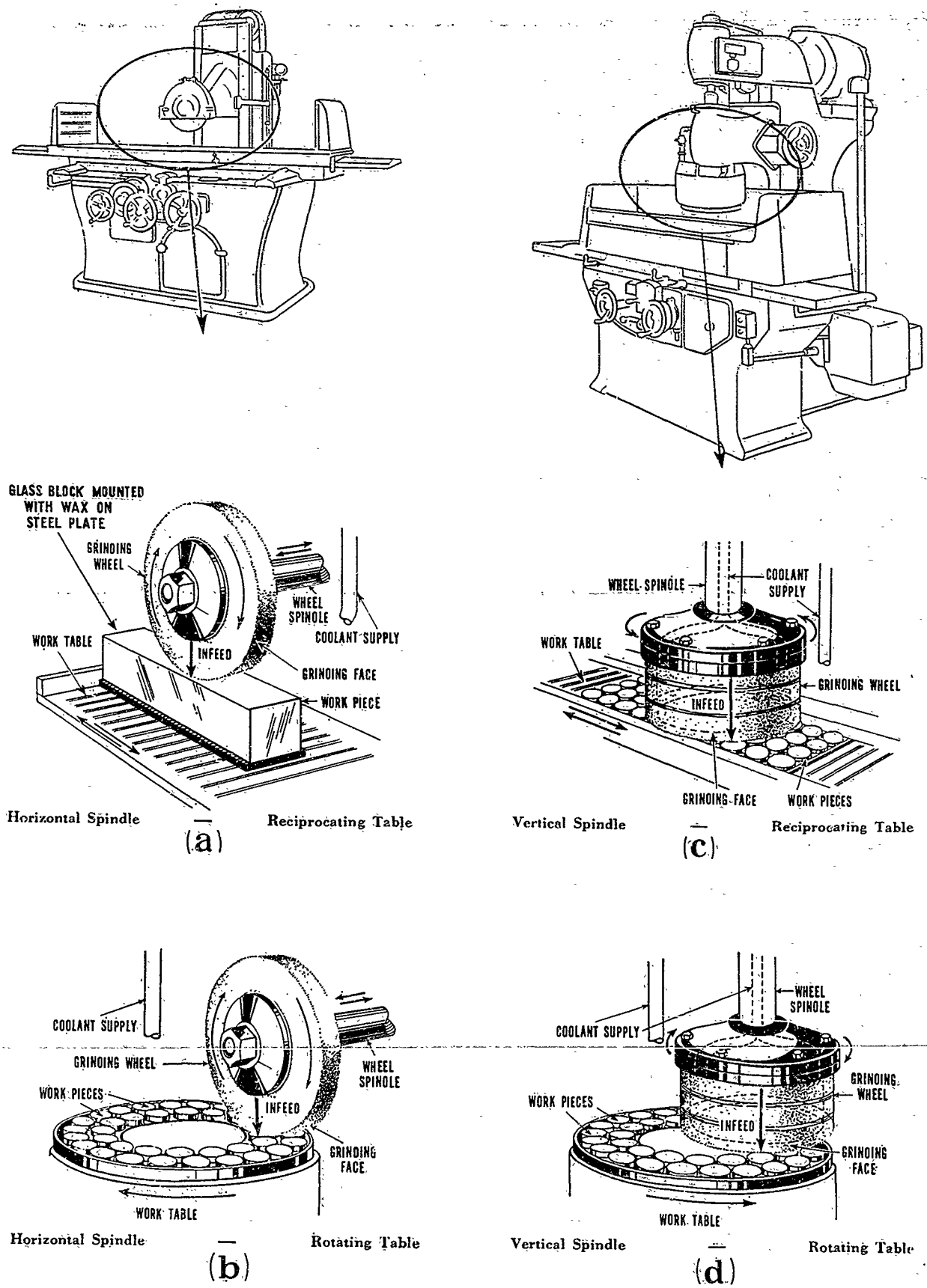

The Carborundum Company

Figure 501.—Surface Grinding Machine Types.

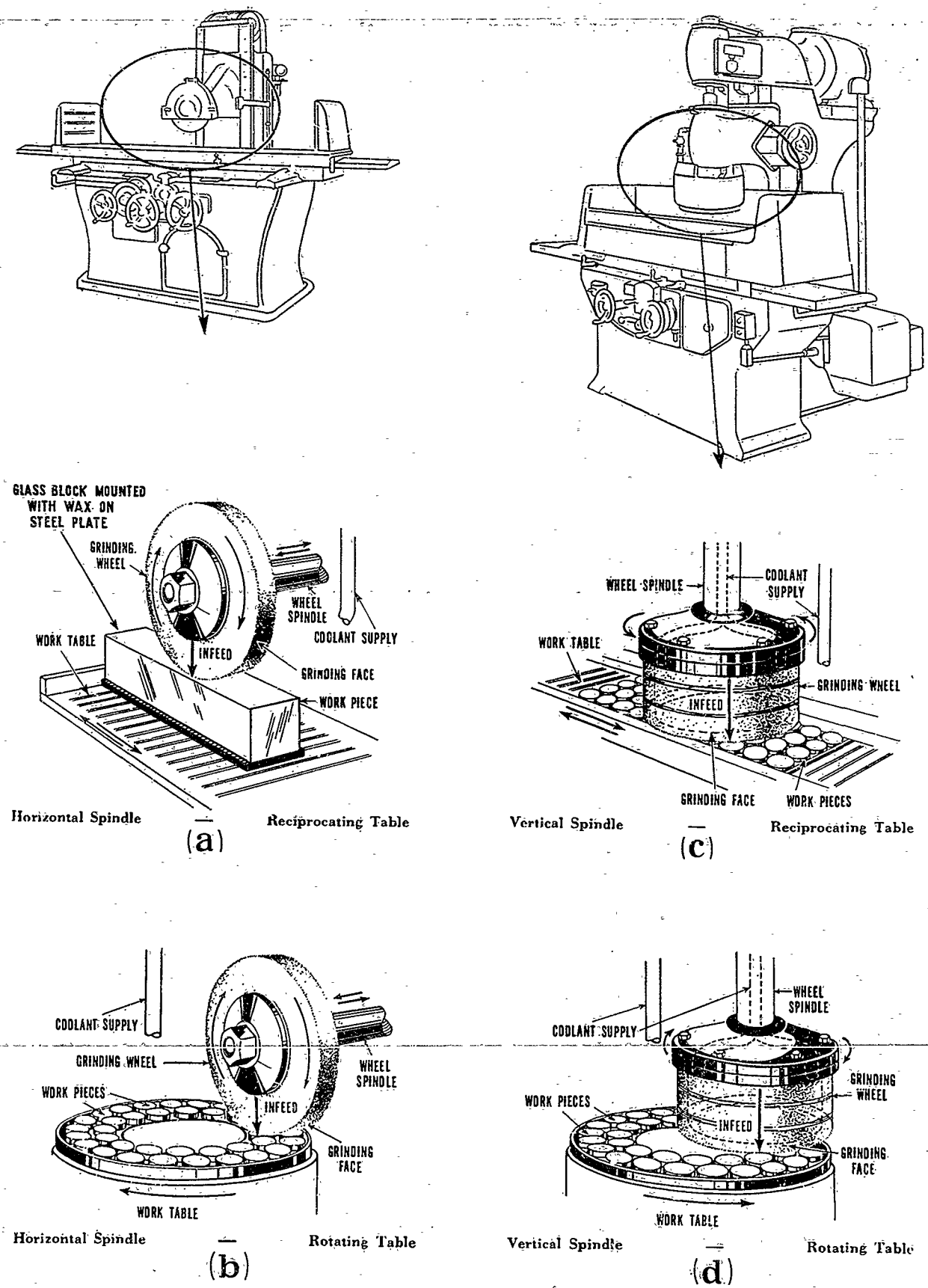

The Carborundum Company

Figure 501.—Surface Grinding Machine Types.

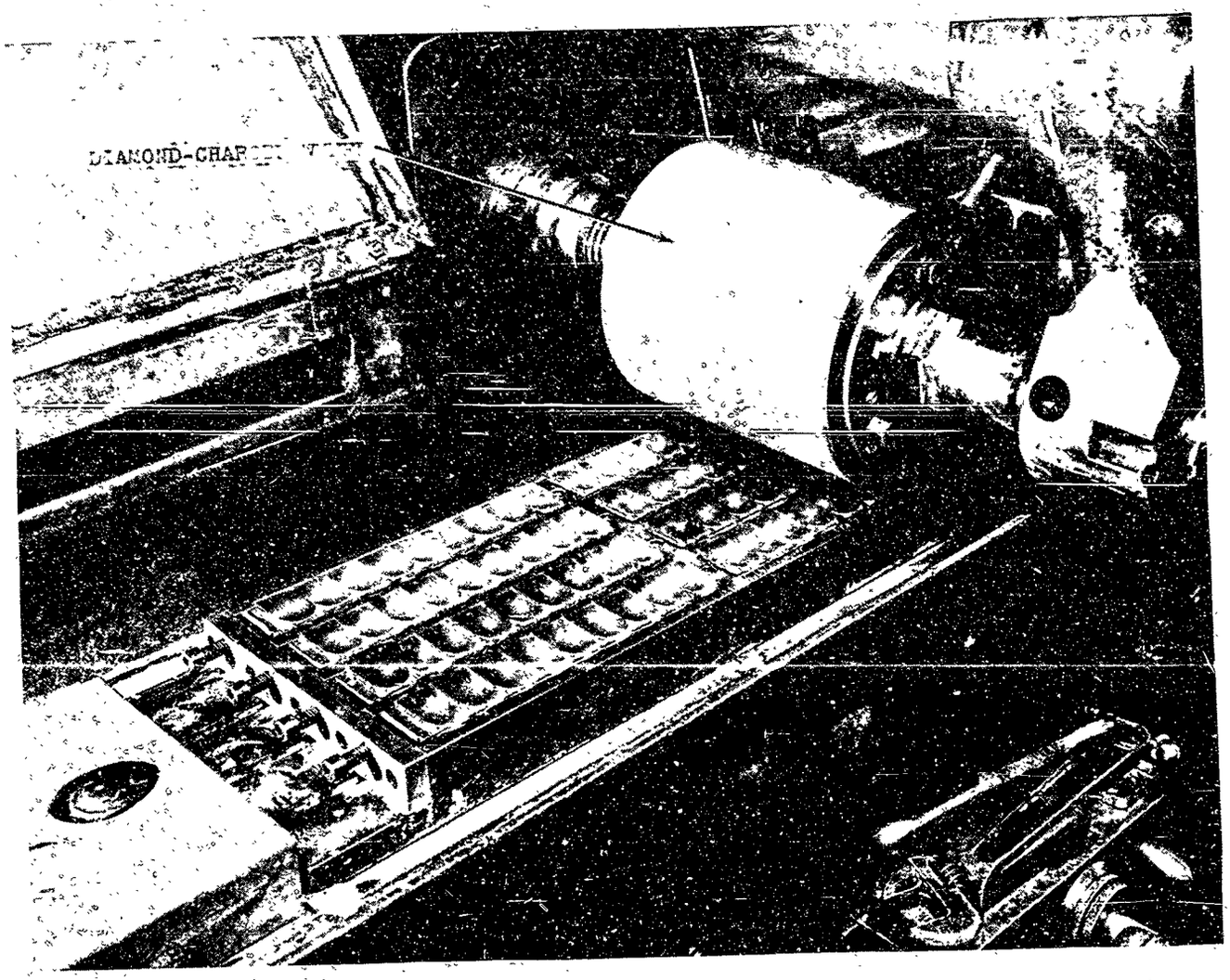

Eastman Kodak Company

Figure 502.—Horizontal-spindle Reciprocating-table Surface Grinder Grinding the 90° Faces of Porro Prisms.

(c) Vertical-spindle Reciprocating-table Surface Grinder.—The Norton Vertical Spindle Surface Grinder, shown in Figure 504, is equipped with automatic feed giving a downward spindle motion of 0.002 inch per oscillation of the table. The normal table oscillation is 6 per minute with the wheel rotating at 3500 rpm. The grinder may be fitted with a magnetic chuck, 6 x 18 inches and it will take a diamond-charged grinding wheel 6 inches in diameter.

(d) Vertical-spindle Rotating-table Surface Grinder.—The Blanchard No. 11 Rotary Surface Grinder (Figure 505) is typical of the vertical spindle rotary machines which are in most common use in optical shops. While the detailed description which follows relates to this particular machine, the coolants, tools, and fixtures described may be used with any of the other types of surface grinders.

VERTICAL-SPINDLE ROTATING-TABLE SURFACE GRINDER

Operation.—Pieces of glass are mounted with wax on a blocking plate as described in Chapter 4. In hot weather higher melting point waxes or combinations are used for mounting. Stickum is used on surfaces which are not ground, while softer waxes—such as beeswax, paraffin, or an amorphous petroleum wax with a melting point of about 165° F.—are used on ground surfaces.

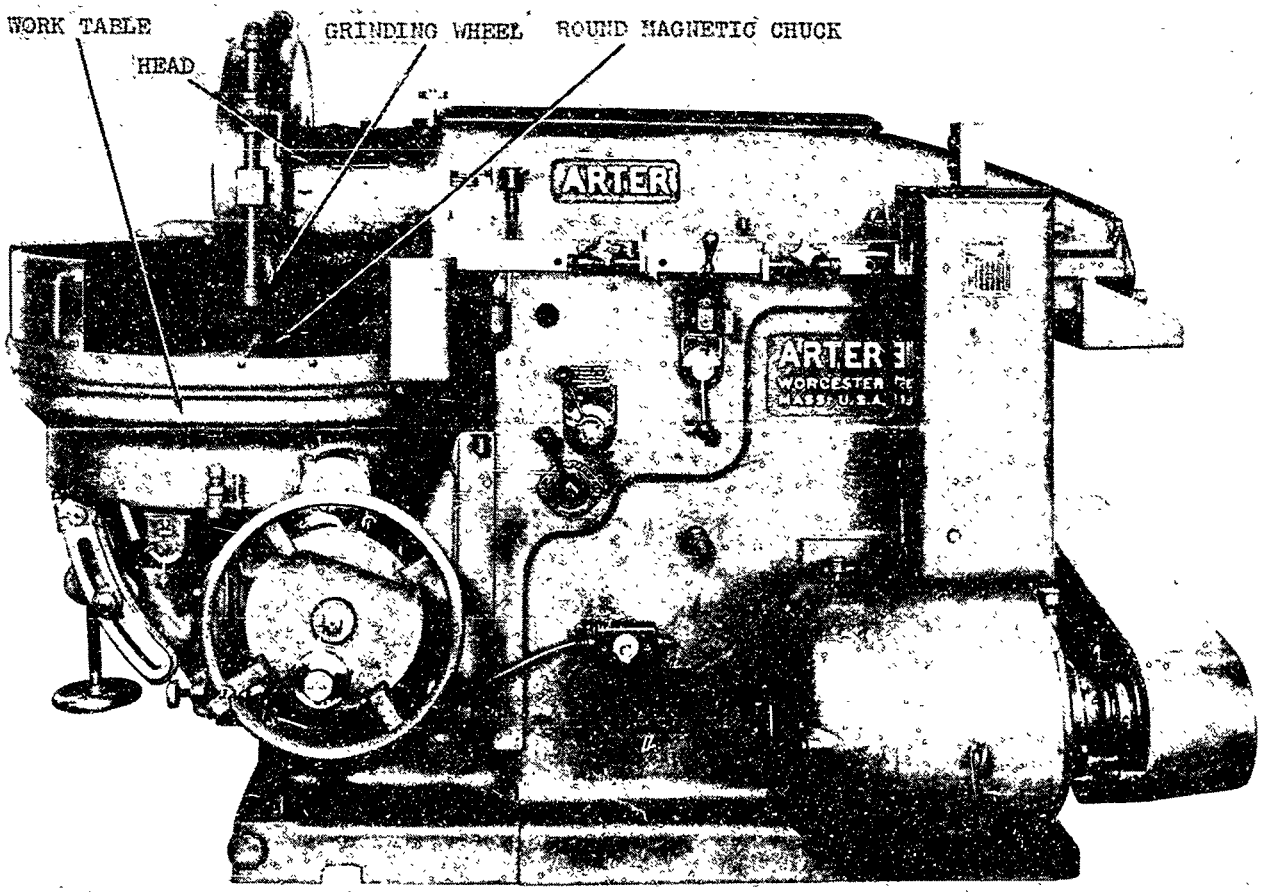

Arter Grinding Machine Company

Figure 503.—Horizontal-spindle Rotating-table Surface Grinder.
(Arter Model B)

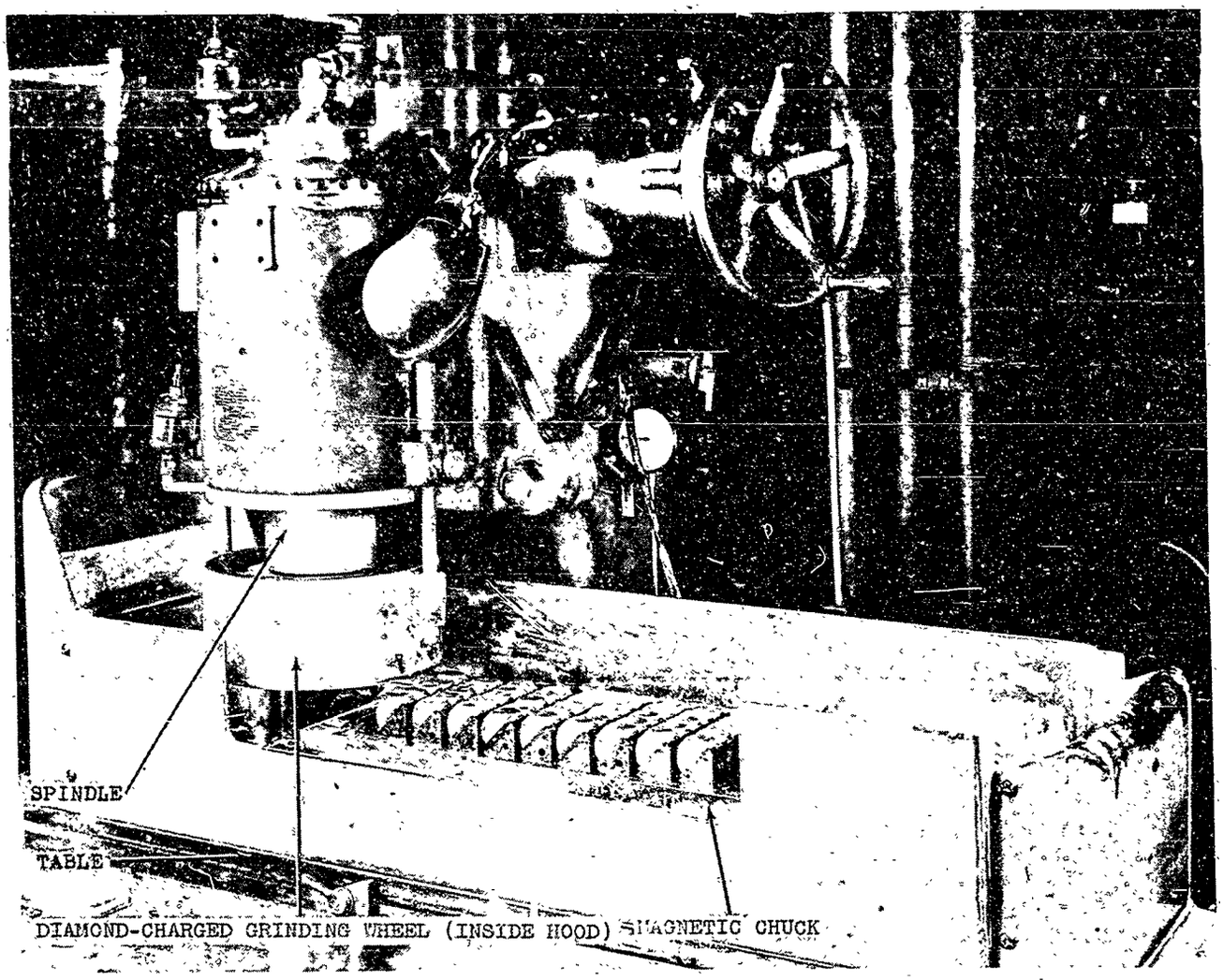

Research Enterprises Limited

Figure 504.—Vertical-spindle Reciprocating-table Surface Grinder. (Norton)

After cleaning the contacting surface thoroughly with a solvent, the blocking plate is placed in a central position on the magnetic chuck. (See Figure 506.) With the block held firmly by throwing the chuck switch and with the grinding wheel high enough to clear the work, the table is moved until the center of the chuck is under the face of the cylindrical grinding wheel. The table is locked in this position for continuous rotation, and the splashguards are closed. First the grinding wheel is started, then the chuck, and then the coolant valves are opened. The head is fed down by hand or power until the work is ground to size.

Grinding to size can be controlled in any one of three ways:

1. By setting the automatic-feed stop as determined from a previous run.

2. By using the Blanchard caliper attachment.

3. By grinding down to a coppered or painted size block.

All grinding is done with a rotary motion, the glass being removed by a rapid succession of shallow cuts over the entire surface of the work. If fine finish and extremely accurate flat surfaces are required, the feed of the grinding wheel should be reduced to 0.004 inch per minute for the last few thousandths. When

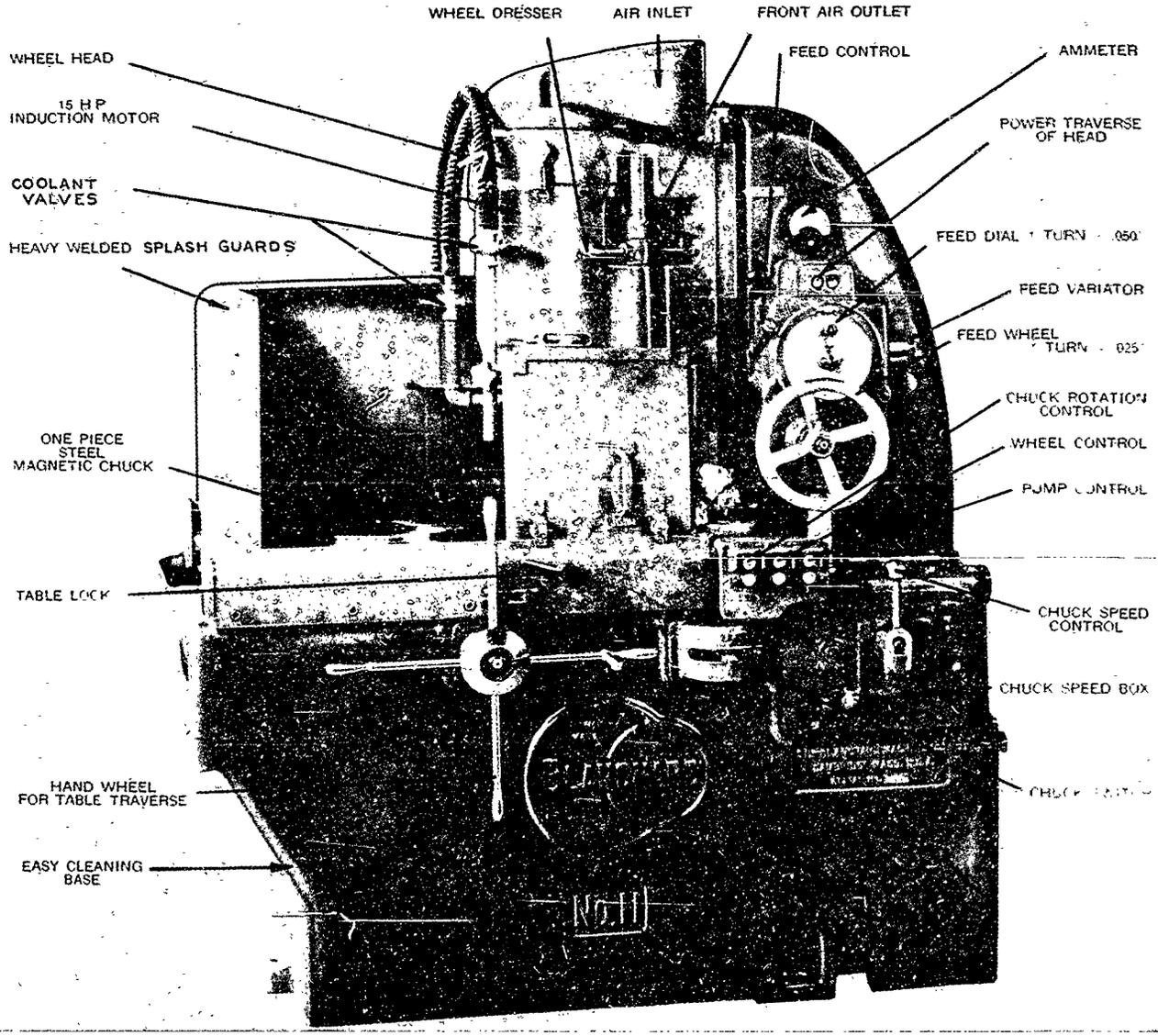

The Blanchard Machine Company

Figure 505.—Vertical-spindle Rotating-table Surface Grinder.
(Blanchard No. 11)

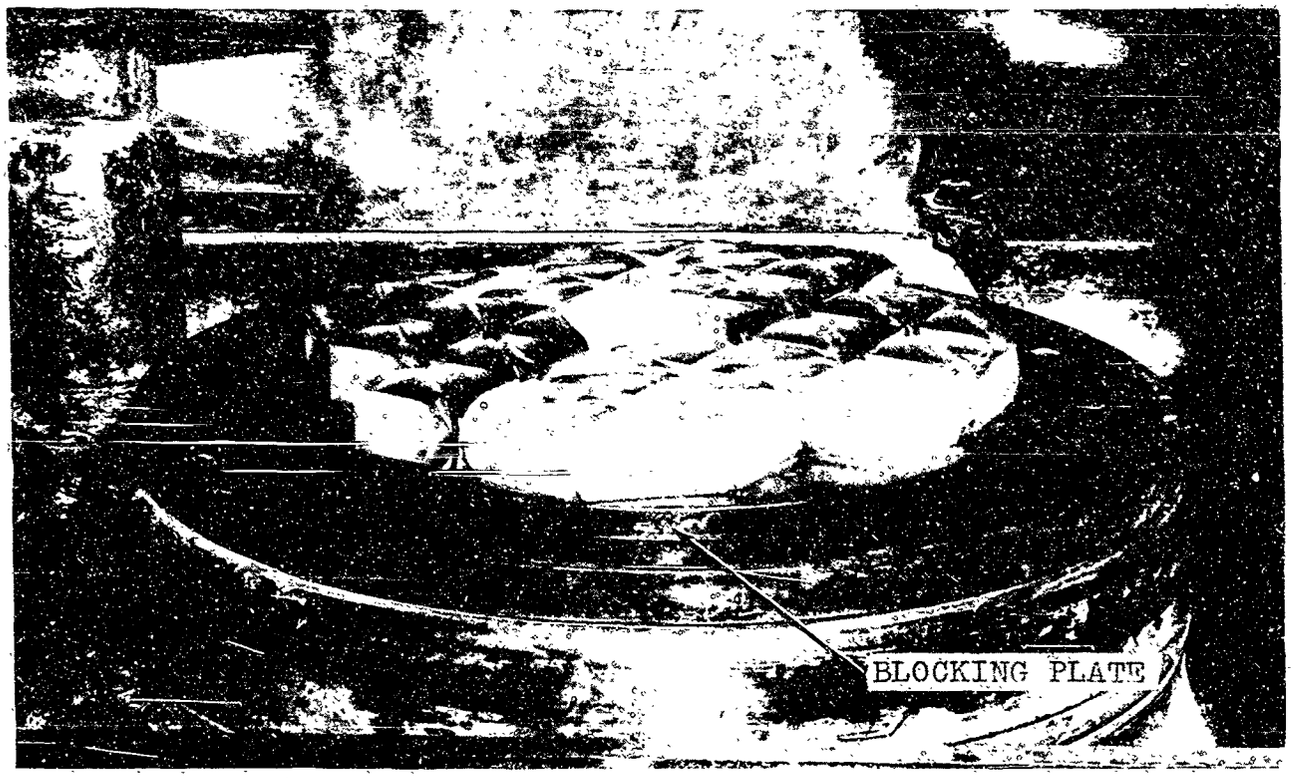

Anchor Optical Corporation

Figure 506.—Porro Prism Blanks Mounted on Surface Grinder for Rough Grinding Second Side to Thickness.
(Official U.S. Navy Photograph)

the desired size is reached, the grinding head is raised slowly for about 0.002 inch, and then quickly by hand or power. The grinding wheel is shut off, the table unclamped and moved back to the loading position. The chuck switch then is operated to neutralize the residual magnetism and allow the plate to be removed easily.

The horizontal traverse of the chuck is not used in grinding. It is used only to move the chuck between the loading and grinding positions as shown in Figure 507.

Description

Grinding Wheel.—The abrasive grinding wheel used on the Blanchard is a hollow cylinder cutting on one end. (See Figure 508.) Silicon-carbide wheels are set with sulphur in an adapter which is fastened to the faceplate on the spindle. When the wheels are worn down to the adapter, the stub can be removed and a new wheel mounted. For convenience, the Blanchard 'wheel mounter' (Figure 509) may be used.

Wheel Dresser for Silicon-carbide Wheels.—As long as the wheel wears normally it will remain sharp. When natural wear is not sufficient, the silicon-carbide wheel may be sharpened quickly by use of the dresser which is built into the machine.

The actual dressing is done by a group of toothed steel cutters on an arm at the bottom of a vertical bronze shaft mounted in the wheel head. It is operated by a handle that swings the cutters across the wheel surface. Micrometer adjustment for height is secured by a hand nut just above the operating handle.

The manufacturer's instructions should be followed when dressing diamond wheels.

Feed.—The wheel head is supported on a heavy feed screw mounted in ball bearings in the column and geared to a large dial graduated to 0.0005 inch on the feed gear box (see

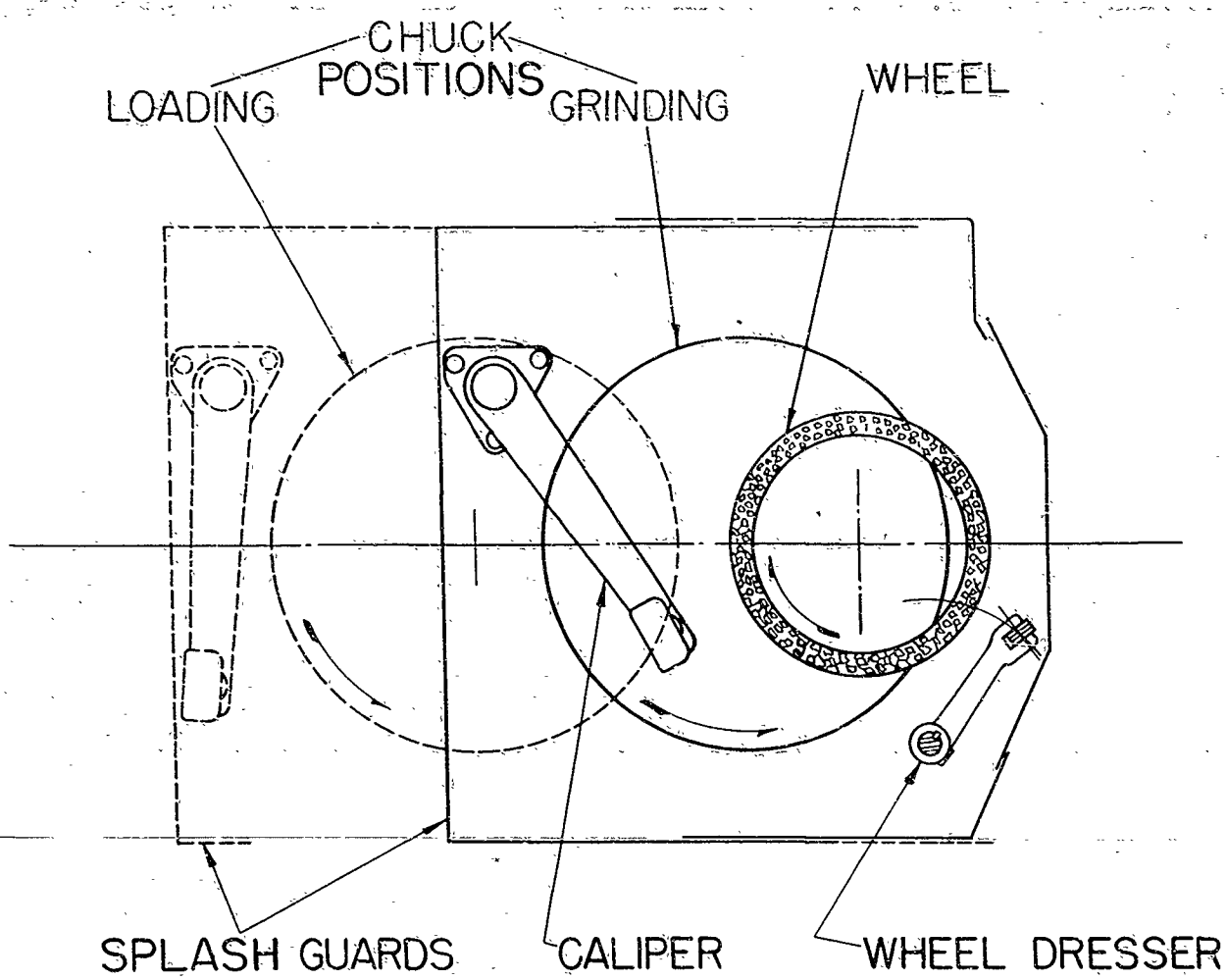

The Blanchard Machine Company

Figure 507.—Plan View Showing Chuck Positions for Loading and Grinding Using Blanchard No. 11 Vertical Surface Grinder.

Figure 510). One revolution of the dial indicates 0.050 inch feed of the wheel head. This dial carries a 'feed trip' and is arranged to unlock easily from its shaft for setting the zero point and trip.

The hand-feed wheel in front of this dial makes one turn for each 0.250 inch feed of the wheel head.

The power feed may be varied from 0.004 to 0.070 inch per minute. It is engaged by pulling the feed control lever down to a horizontal position. It is disengaged either manually, by pushing the lever upward, or automatically, by the feed trip on the dial. Push buttons directly over the dial operate a motor for quickly raising or lowering the wheel head. The feed-control lever is interlocked so that this rapid motion cannot be used when the feed is engaged.

Directly over the feed gear-box is an ammeter which shows the power being used by the wheel. This is a useful guide for determining the rate of feed, also when dressing the wheel.

Work Table.—The glass is mounted on a steel or cast-iron fixture which in turn is held on a rotary magnetic chuck set in a table body with a sliding base which can be moved horizontally. In certain cases the glass may be placed directly on the chuck, with steel pieces around it to hold the glass in place.

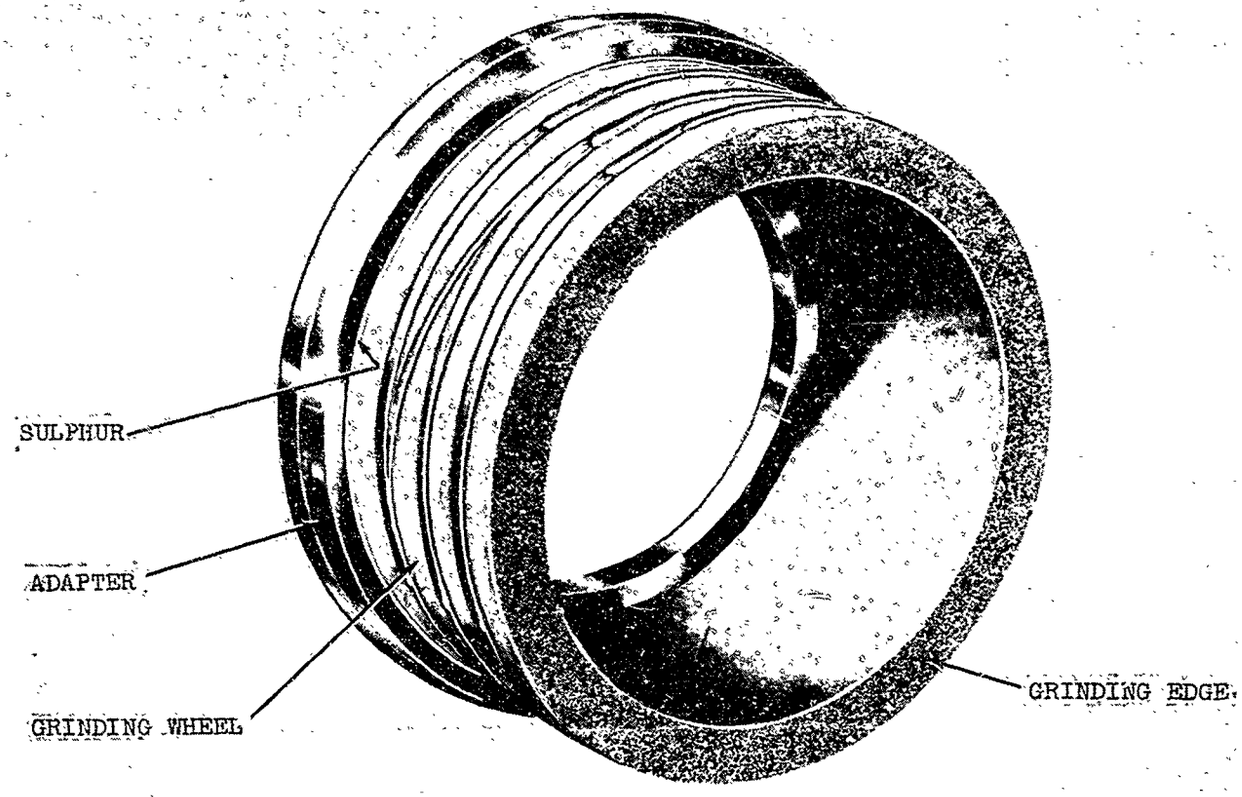

The Blanchard Machine Company

Figure 508.—Silicon-carbide Hollow-cylinder Grinding Wheel.

The sliding motion is used only for moving the table between the loading and the grinding position. By means of a hand wheel the table body is moved along the base to bring the center of the chuck just under the near edge of the wheel. (See Figure 507.) In that position the chuck is rotated by power in one direction continuously and the wheel head is fed downward gradually. The position of the chuck is not changed during the grinding operation. When the desired amount of glass has been removed, the chuck is moved clear of the wheel after the head is raised, and the work is then removed.

Since the chuck can be rotated while in any position, the machine can be used to grind a piece with a central projection or several small pieces laid radially with inner projections above the surface to be ground.

Magnetic Chuck.—The magnetic chuck is 16 inches in diameter and is made from a solid disk of forged steel with narrow brass rings spaced concentrically ½ inch apart in the working face. Leakage is impossible since no joints are exposed to the coolant.

Caliper Attachment.—The thickness of the work mounted on the chuck is measured accurately with the Blanchard caliper (Figure 511). The indicator dial is set to zero while the contact button is resting on a size block or finished piece of work. When the contact button is resting on other work, the dial indicates, in thousandths of an inch, the amount by which the work varies from the thickness desired.

The reading is zero when proper thickness is reached. The chuck should be at rest when the reading is taken. When not in use, the caliper is placed out of the way near the splash-guard. The caliper can measure work as much as 8 inches in height on a 16-inch chuck.

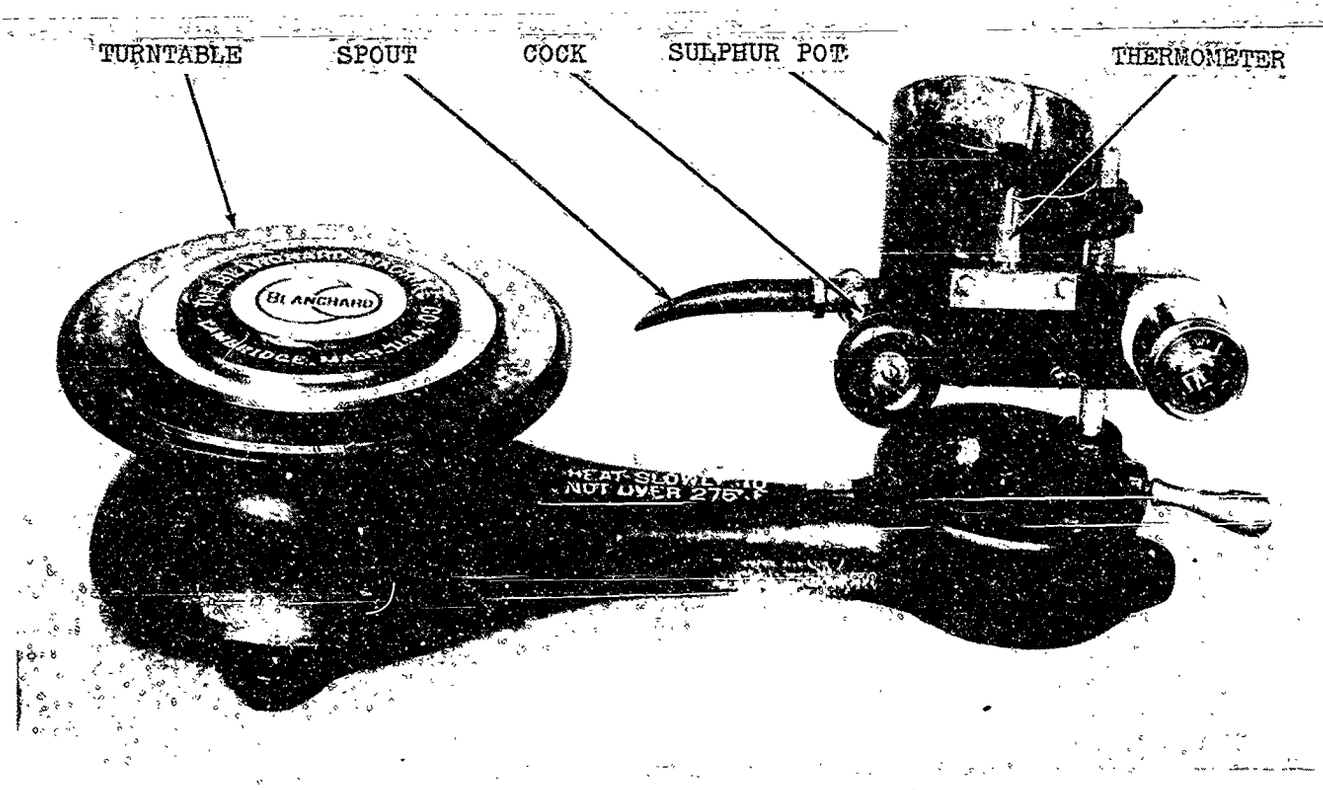

The Blanchard Machine Company

Figure 509.—Wheel Mounter for Mounting Grinding Wheel on Adapter.

Structure and Function of the Grinding Wheel

The factors directly controlling the quality and quantity of work accomplished with a grinding wheel are:

1. The abrasive.
2. The grit, or grain size, of the abrasive.
3. The bonding agent.
4. Porosity of the wheel.

Detailed information relative to abrasive types and sizes, is given in Chapter 25, *Materials*. The function of the abrasive grains is to cut away small pieces of work (chips). The larger sizes permit deeper cuts which leave a rougher surface. The smaller grit sizes, which remove less material and develop a finer surface, are used primarily for finishing. For grit size and surface produced by each, see Brush Analysis Test, (Chapter 25).

The bond material simply holds the cutting grains in place. Four types of bond are in common use:

1. Vitrified Products (Clay or Glass).—Wheels made with this bond are used for high stock removal. The bond is not affected by water, acid, oils, or ordinary temperature conditions.

2. Synthetic Resin Products (Resinoid).—The wheels made with this bond can be run at high speeds, cut cool, and remove stock rapidly. The surface developed is finer than that produced by a similar grit wheel with other bonds.

3. Rubber.—This bond is used chiefly where a good finish is required. Because of its strength and toughness, this bond is used extensively in making extremely thin cutting-off wheels.

4. Metal.—The use of a metal bond is limited to the diamond-grit wheel. It has a longer life than a resinoid-bonded wheel when used under the same conditions, since it can retain the diamonds under greater pressure and higher temperature.

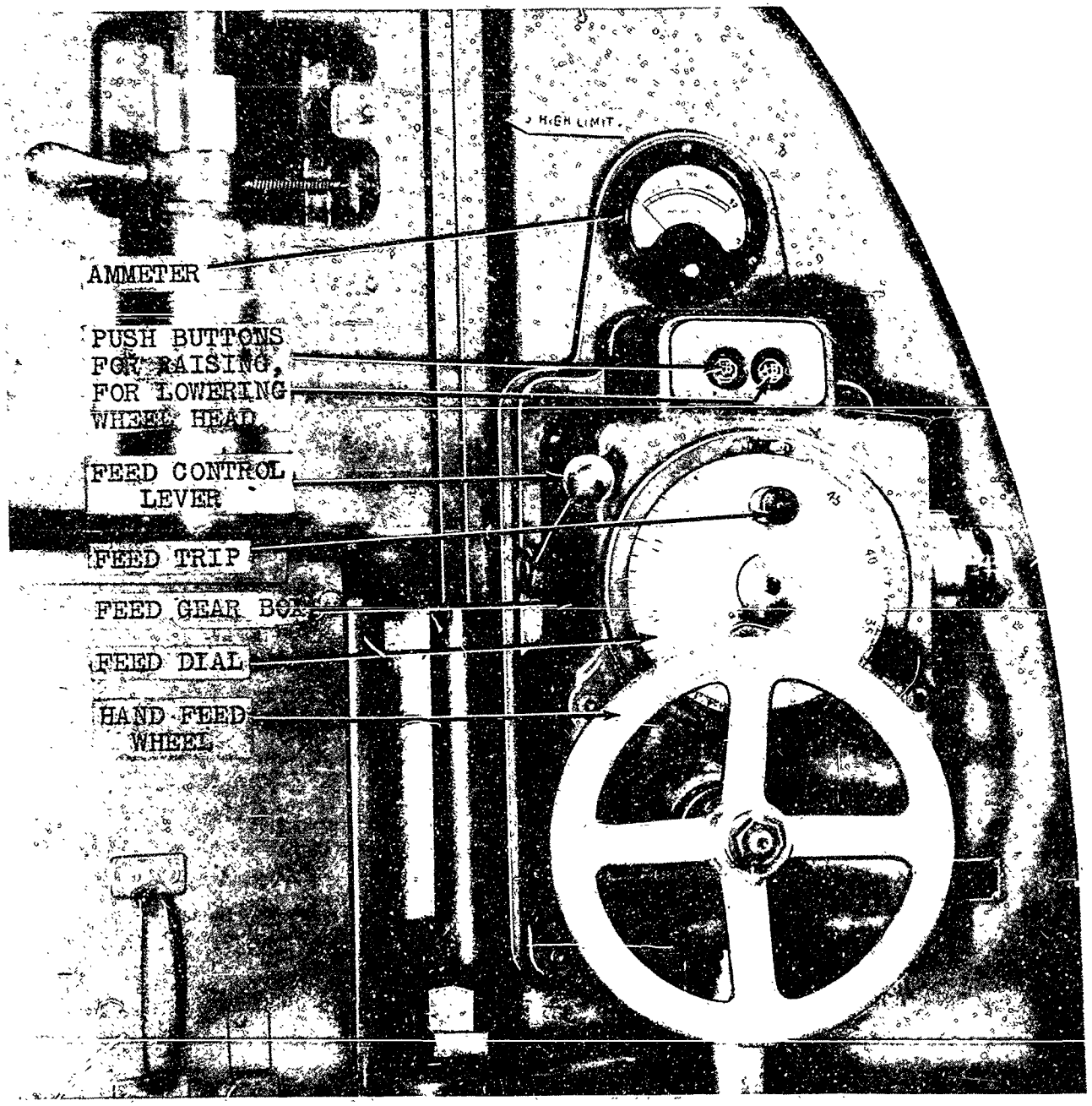

The Blanchard Machine Company

Figure 510.—Feed Control and Built-in Ammeter.

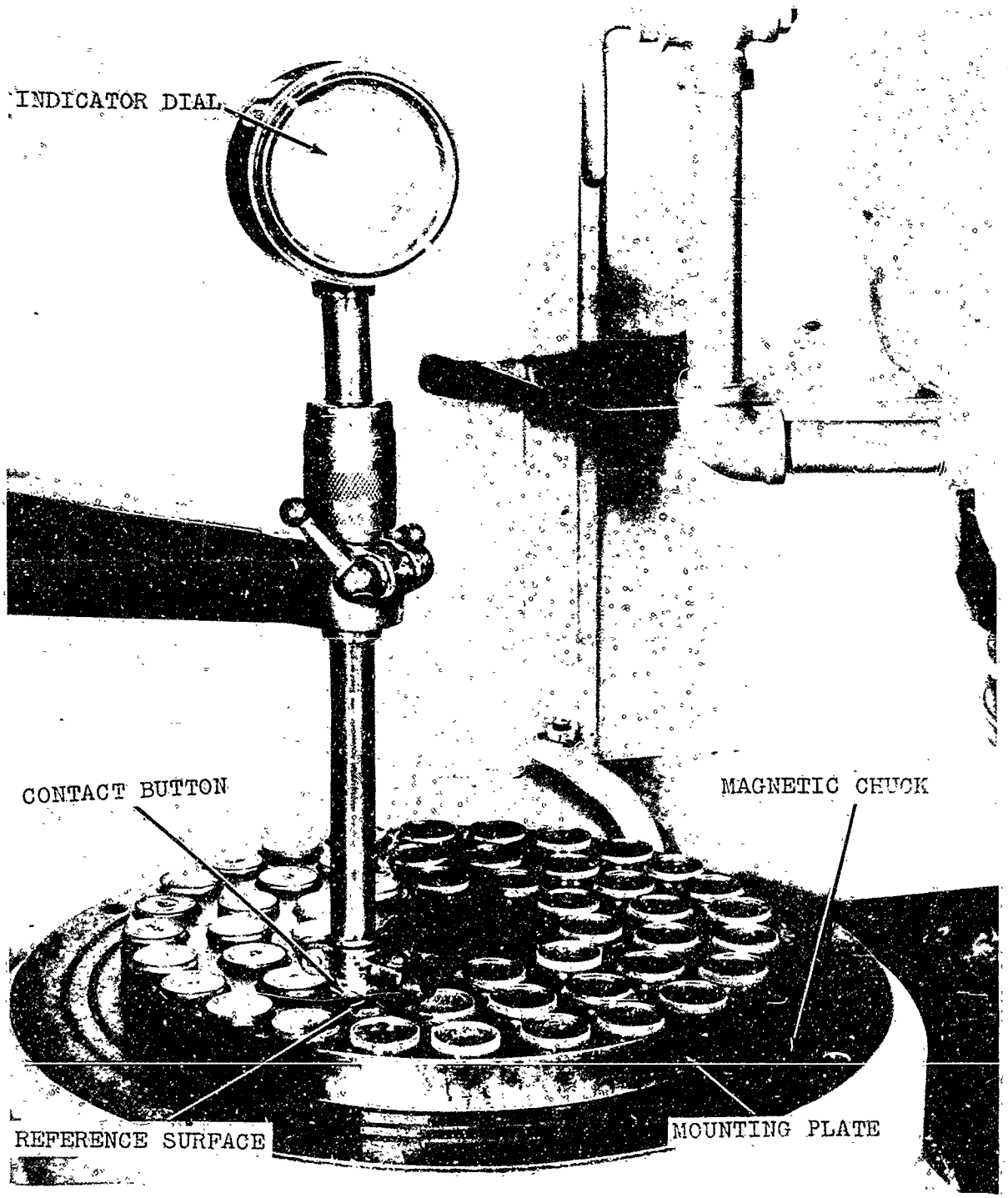

Figure 511.—Blanchard Caliper Attachment.

The porosity or 'structure' of the *artificial* (*e.g.*, silicon-carbide) abrasive wheel is the relative amount of space between the abrasive grains.

The grade, or 'hardness', of the wheel does not refer to the hardness of the abrasive. The grade of the wheel is the measure of the ability of the bond to retain the abrasive grains for grinding purposes. A soft bond holds the grains weakly; a hard bond holds the grains firmly.

The 'concentration' of a *natural* (diamond) abrasive wheel is a measure of the relative weight of diamond powder in a given volume. For example: 72 carats per cubic inch is defined as '100 concentration'. The remaining space is filled with the bonding medium.

Preparing and Mounting the Grinding Wheel

Silicon Carbide.—The silicon-carbide hollow-cylindrical grinding wheel is mounted in an adapter furnished with the Blanchard machine (see Figure 508). The adapter is cleaned of any oil or sulphur and placed on the turntable of the Blanchard wheel mounter (Figure 509). The wheel is placed in the wheel ring and centered by rotating the turntable, using the spout of the sulphur pot as an indicator. Melted sulphur is run in between the flange of the adapter and the wheel. The sulphur hardens almost immediately and the wheel is ready to mount on the faceplate of the grinder.

Diamond.—The metal-bonded wheels are usually ½-inch thick with a depth of ⅛ to ¼ inch of diamond. The wheels are made in two parts—the adapter and the diamond lap. When a diamond wheel is worn, the adapter and worn lap can be returned to the manufacturer to have a new diamond lap mounted, or, if the facilities are available, the diamond lap can be purchased and mounted in the adapter by the user.

The adapter is a metal ring, carefully machined to match the holes in the faceplate of the machine. The bottom side of the adapter is recessed to a diameter approximately 0.005 inch larger than the outside diameter of the diamond lap. The lap is fastened to the adapter by a sweating process, as follows:

1. The adapter and the diamond lap are placed on a hot plate and heated. The diamond lap should not be heated with an open flame.
2. The surfaces which are to be in contact, are tinned.
3. The diamond lap is placed in the adapter and allowed to cool under pressure.

Parallelism of the wheel must be checked before it is mounted on the faceplate. In order to mount the wheel accurately on the head:

1. A board is placed over the magnetic chuck.
2. The wheel is placed face down on the board.
3. The center of the wheel is aligned with the center of the head.
4. The head is brought down slowly until it touches the adapter.
5. The wheel is then positioned so that the screw holes of the wheel coincide with those of the head.
6. The screws are inserted and tightened.

Wheel Life and Surface Finish

All other things being constant—*i.e.*, discounting the variables: (1) type of glass, (2) type of wheels, and (3) operator—the factors which govern wheel life and surface finish are:

Wheel Speed.—An increase in wheel speed increases the number of abrasive grains contacting the work within a given time. As the same amount of work is divided among an increased number of grains, the stresses upon each grain will be reduced. This enables the bond to hold the grains in the wheel face longer, and causes the wheel to wear more slowly. The wheel is said to act 'hard'.

A decrease in wheel speed causes reactions opposite to those mentioned above.

Work Speed.—As the speed of the work is increased, and each abrasive grain is required to do more cutting, the increased stresses cause the grain to fracture more quickly and thus release more readily from the bond. The wheel therefore wears rapidly and is said to act 'soft'.

As the speed of the work is decreased, the amount of cutting done by each abrasive grain is thereby reduced. As each grain has less work to do, the stresses on it are reduced, causing it to fracture less quickly and to be held longer in the wheel face. The result is that the wheel wears slowly and is said to act harder.

Area of Contact.—The area of contact between the wheel and work also affects the stresses set up in the wheel. When the area of contact is small, the stress per grain is great and the wheel acts soft. If, however, the area of contact is increased, the stress per grain is less; hence, the wheel acts harder.

Infeed.—Rate of infeed affects directly the thickness of the chips, the same as an increased work speed—the greater the rate of infeed the softer the wheel acts, and vice versa. (See Surface Grinder Infeed Table, Figure 512.)

When using a coarse-grit wheel, a better surface is produced if the rate of infeed is decreased for the last 0.010 inch and the wheel backed away slowly.

If the surface to be ground is composed of large slabs covering approximately 70 to 80 square inches the rate of infeed of the wheel (120-grit diamond, 100-concentration, metal bond) can be approximately 0.028 inch per minute. When the same area consists of a large number of smaller pieces, each approximately 1½ inches square (2.25 square inches) the rate of infeed may be increased to 0.040 and sometimes up to 0.052 inch per minute. However, in order to reduce fissures caused by this high rate of stock removal, the last 0.010 inch should be removed at 0.010 inch feed per minute. If the rate of infeed is too fast, the coolant is prevented from entering between the wheel face and surface being ground. This causes excessive heat at the point of contact and rapid wheel deterioration.

The infeed of the finer-grit silicon-carbide wheel must be carefully controlled. If the feed is too rapid, the wheel wear is excessive and the face disintegrates. Once this breakdown occurs, small grains of abrasive float off in the coolant and may be crushed into the surface of the glass by the wheel. This usually creates scratches over a large area. The operator can avoid this breakdown by watching the built-in ammeter in the column just above the feed box. The ammeter shows the power consumption of the wheel-spindle motor. The feed can be controlled so as to keep the power consumption under the breakdown point.

Other factors governing the rate of infeed are:

Height of Work.—The higher the work, compared with the smallest dimension of the base, the lower should be the rate of infeed. When the height is equal to or less than the smallest base dimension, the rate of infeed may be increased.

Anchorage.—A flat surface in contact with a mounting plate is held more securely than an uneven surface. The uneven surface presents several points of contact with the mounting

SURFACE GRINDER INFEED TABLE

ITEM	FIRST GRIND		SECOND GRIND		FINISH GRIND	
	Silicon Carbide	Diamond	Silicon Carbide	Diamond	Silicon Carbide	Diamond
Grit Size	80	120	220	240	--	400
Grade	Soft	--	Medium or soft	--	--	--
Concentration	--	100	--	100	--	100
Bond	Vitrified or Resinoid	Metal	Vitrified or Resinoid	Metal	--	Resinoid
Feed (inches per minute)	0.015–0.030	0.012–0.034	0.010–0.024	0.015–0.028	--	0.0006 (hand feed)

For additional details of surfaces see under "Brush Surface Analyzer," Chapter 25

Figure 512.

plate The entire pressure is transmitted to the plate only at these points. The flat surface distributes the pressure evenly over the entire area.

Adhesive. — An amorphous petroleum wax with a melting point of about 165°F. (*e.g.*, 'Cerelene') may be used as the adhesive when the surface is flat; stickum or its equivalent is used when the surface is uneven.

Abrasive Grit.—The infeed must be reduced for the finer grit wheels to compensate for the shallower cut of the smaller grits. If the infeed is again reduced for the last part of the grind, a better surface is produced. If the infeed is too fast when grinding with a fine-grit resinoid-bonded diamond wheel, the bond will cover the diamonds and leave smears on the surface of the glass. An excessive feed will also shorten the life of the wheel.

Chuck Speed.—If the speed of the chuck is increased, the wheel will act soft. If the chuck speed is decreased, the wheel will act hard. When the chuck speed is too fast the pieces strike the wheel too sharply, causing them to loosen their anchorage—possibly resulting in wheel and work damage.

Dressing the Wheel.—Under certain conditions, grinding wheels load, *i.e.*, pick up small particles of glass, which pack into the spaces between the abrasive grains and thereby reduce their efficiency.

Many of the surface grains in the grinding edge may have lost their cutting action. Dressing removes the 'fill' and tears out the dull surface grains, thus restoring the cutting action of the wheel.

'Truing' is a term applied to the shaping and cutting away of the wheel to make its face concentric, and its sides plane and parallel, or to alter its shape for grinding special contours. (See Chapter 7.)

(a) Metal-bonded.—A diamond wheel may be dressed with a silicon-carbide stick held against the cutting edge. While bearing on the stick, move it with a scrubbing motion gradually around the face of the wheel in a direction opposite to that of the wheel's rotation.

Another method specifically adapted for any vertical-spindle rotating-table machine is to place a mounted silicon-carbide wheel 80-grit size, or finer, centrally on the magnetic chuck holding it magnetically by its mounting ring. Rotate the chuck at about 41 revolutions per minute with the table moved into the grinding position. Feed the head down until the diamond wheel touches the silicon-carbide wheel. Do not rotate the diamond wheel by power. As soon as the diamond wheel touches the rotating silicon-carbide wheel it is automatically set in motion. With the diamond wheel rotated by the silicon-carbide wheel, a downfeed of a few thousandths will grind out the metal bond to make the wheel free-cutting again. During this operation ample coolant should be used to carry away the loose particles.

(b) Resinoid-bonded.—The fine-grit resinoid wheel should not require dressing if it is used carefully. If it becomes necessary to dress this type wheel, it should be done according to directions furnished by the manufacturer of the wheel.

COOLANT

The coolant or lubricant may be either water or a mixture of water and a soluble oil. No matter what other substances are added to the water, the proportion of water is kept high. The particular type of oil and amount of dilution should be studied carefully, since the life of the wheel and the type of surface produced are affected by the coolant.

The purposes of the cooling solution are:

1. To keep the cutting surface of the wheel clean by washing away the ground particles of glass.

2. To maintain a uniform temperature of the work and prevent localized heating at point of contact.

3. To act as a lubricant, *i.e.*, to reduce the friction between the wheel and the work.

4. To prevent rusting of machine parts.

Quantity of Coolant.—Other conditions being equal, efficiency of the wheel is increased as the volume of the coolant is increased. The flow, however, should be constant, as any fluctuation in the volume of flow will cause variations in cutting action of the grinding wheel, and quality of the surface.

The volume of coolant required is proportional to:

1. Area of contact.
2. Work speed.
3. Width of wheel face.
4. Hardness of material being ground.

It has been found that $\frac{1}{8}$ to $\frac{3}{16}$-inch-wide radial slots spaced about 3 inches apart in the wheel face will carry coolant from inside the wheel across the surfaces being ground. This additional cooling improves the performance of the wheel.

Pressure of the Coolant.—The pressure of the flow should be sufficient to force the coolant between the work and the wheel face. If the work speed is in excess of 5000 surface feet per minute, the pressure of the flow becomes increasingly important because the ordinary pressures are not sufficient to penetrate between the wheel face and the work.

Improved performance is obtained by cleaning the mixture in a centrifugal separator, though obviously this is practical only when several machines using a considerable quantity of the coolant are in use.

Some of the coolants which have proved satisfactory are included in Figure 2503.

FIXTURES

Practically all the glass elements to be ground on surface grinders require some sort of fixture in which one or more pieces are located and secured. The design of these fixtures is very important. If a hardened-steel fixture (see Figure 513) can be machined accurately, the prism may be ground almost completely with one blocking operation. Hardened tool steel is the logical material to use because of its wear-resisting quality and stable nature. This stability is necessary in order to retain the angle which has been ground into the fixture.

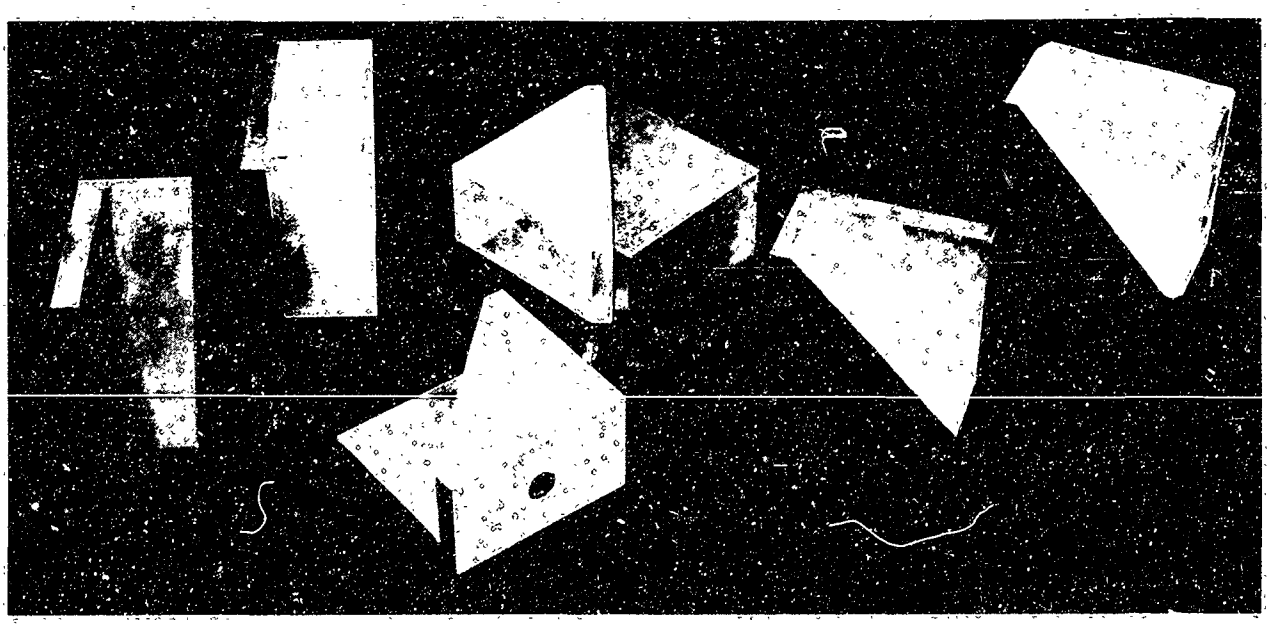

Polaroid Corporation

Figure 513.—Individual Hardened Steel Fixtures for Mounting Right-angle Prism Blanks.

Next to tool steel, a close-grain cast-iron nickel alloy, or similar alloy is recommended, meehanite being preferred. Before the final machining, the fixture casting should be normalized at about 1000°F.

It is good practice to groove the surface of the fixture on which the glass is to be held. These grooves allow excess adhesive material to escape, thus insuring more accurate location of the element in the fixture.

On the vertical-spindle rotary-table type of grinder, the wheel is sometimes in contact with the center of the block. Loose grit may be entrapped here and scratch the glass in this area. Consequently, whenever possible mounting fixtures and tools are so designed that an area of 1½ to 2 inches in diameter at the center is left open. To avoid getting these scratches on larger pieces of glass which must cover the center of the chuck, the corners of the silicon-carbide wheel should be rounded by using a piece of soft steel held firmly against the inside and outside edges of the grinding face while the wheel is rotating.

While most of the fixtures in use require the glass to be fastened to it with some adhesive compound, some are made to hold the glass with a mechanical clamp instead. Spring-loaded clamps are preferred to screw clamps since they are designed to operate with the same clamping pressure for every load. The clamp should be faced with some soft material such as fiber, 'textolite' or its equivalent, so that the glass surface held by the clamp is not bruised. When the glass is taken from such a fixture it requires no cleaning, and usually the operator can do his own mounting. Figures 514, 515, 516 and 517 illustrate various fixtures which have been used with vertical-spindle rotary-table type grinders.

Methods of Mounting Small Fixtures on a Magnetic Chuck

1. Where the surface of the fixture in contact with the magnetic chuck is small, rings

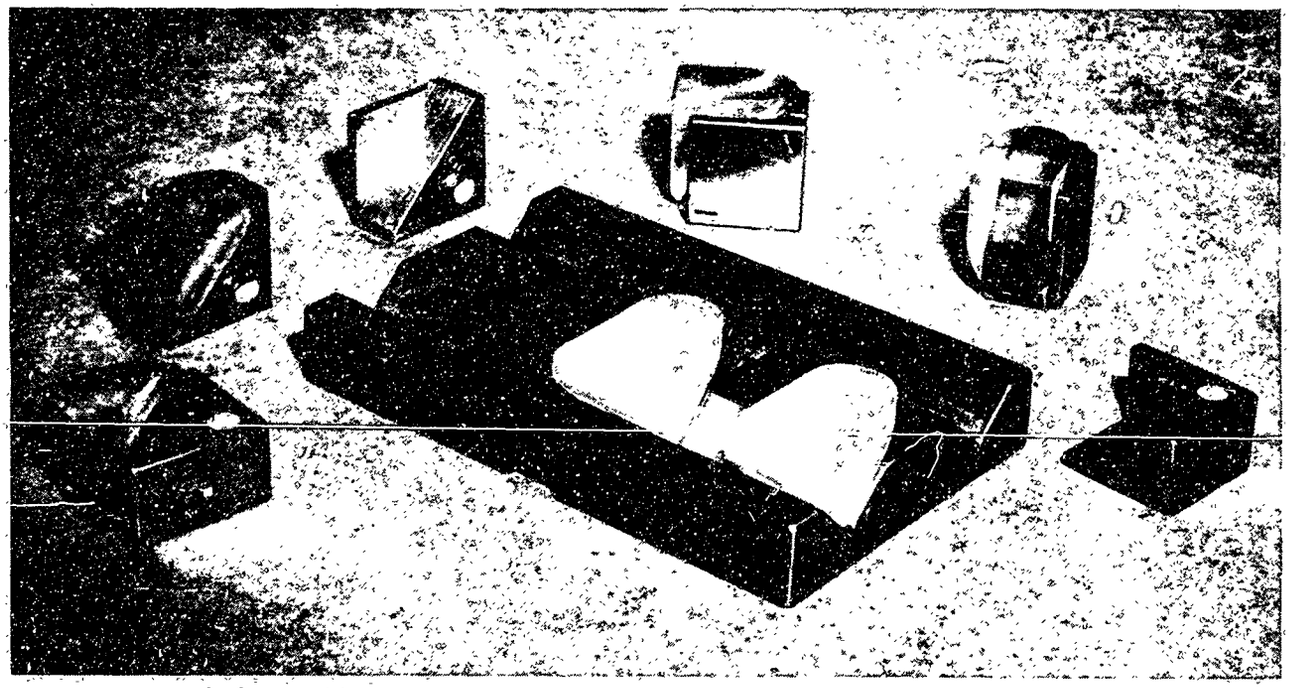

Anchor Optical Corporation

Figure 514.—Porro Prism Pressings Mounted in Fixtures.
(Official U.S. Navy Photograph)

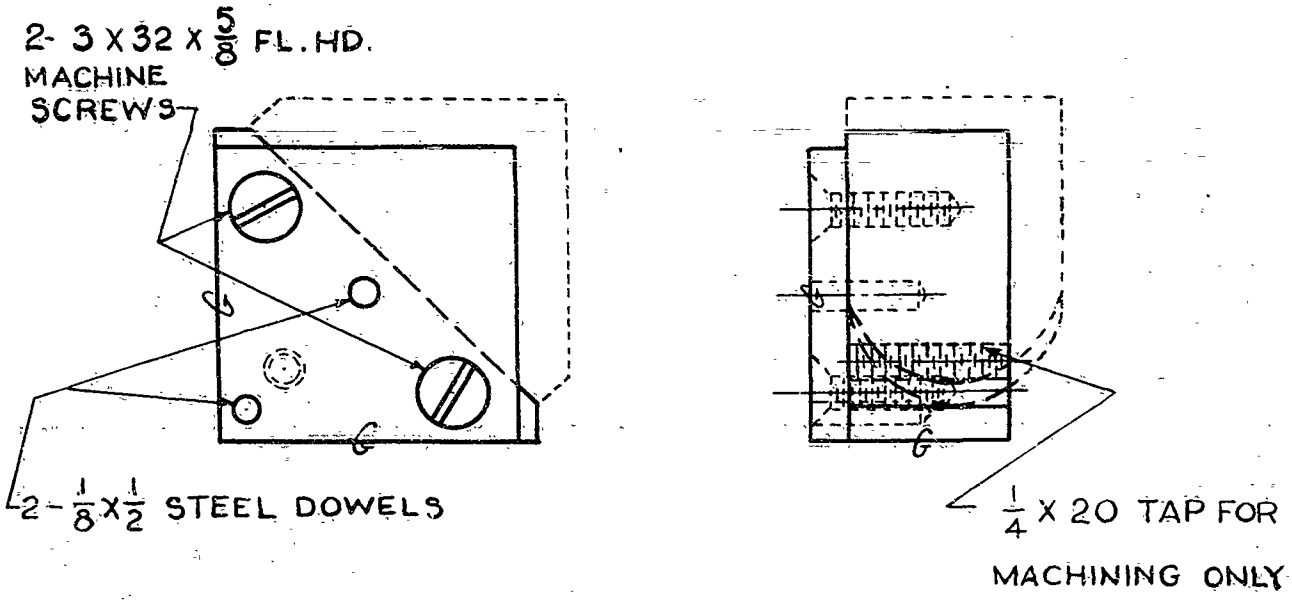

NOTE
SURFACES MARKED "G" TO BE GROUND AFTER ASSEMBLY - ANGLES BETWEEN THEM TO BE HELD TO 90° ± 5"
ROUND ALL CORNERS SLIGHTLY

Anchor Optical Corporation

Figure 515.—Fixture for Grinding 90° Faces and One Side of a Porro Prism Blank.

may be interposed between the chuck and the fixtures which tend to concentrate the magnetic effort of the chuck and make it more effective. Such an arrangement is shown in Figures 518 and 519 where small fixtures are placed on two concentric steel rings which, in turn, are located over the main magnetic poles of the chuck. The contact can be strengthened further, by equipping the rings with pins, and providing the fixtures with holes which will fit over them. This plan provides a strong setting since the pins prevent the fixture from overturning. Such an arrangement is shown in Figure 519, in which the fixtures have been placed in the various positions necessary to grind nearly all of the surfaces of the element.

2. Another method is to set the fixtures adjacent to each other (see Figure 520) in order to give strength by distributing the push of the wheel. They may be held together on a rod as shown in Figure 521 and described under May Oil Burner Corporation later in this chapter.

This method works best where sufficient metal is available to accommodate a rod approximately ½ inch in diameter. The fixtures are located on the magnetic adapter over pins. One side is ground, turned over and the second side ground, using the Blanchard caliper to check for size.

3. The fixtures are mounted with screws on a blocking plate as shown in Figure 522, for grinding one face. They are then turned through 90° to grind the second face.

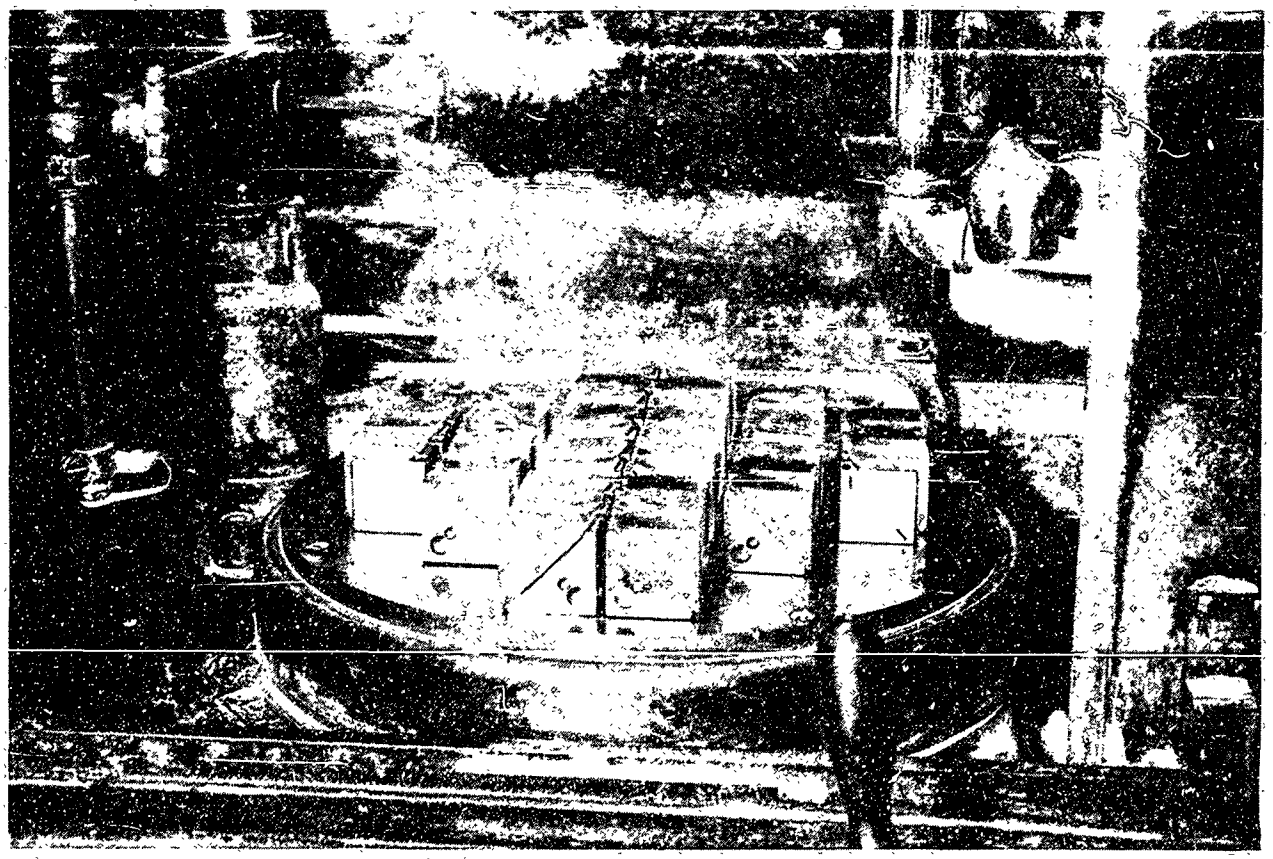

Anchor Optical Corporation

Figure 516.—Porro Prism Fixtures Mounted on Surface Grinder for Rough Grinding 90° Faces.
(Official U.S. Navy Photograph)

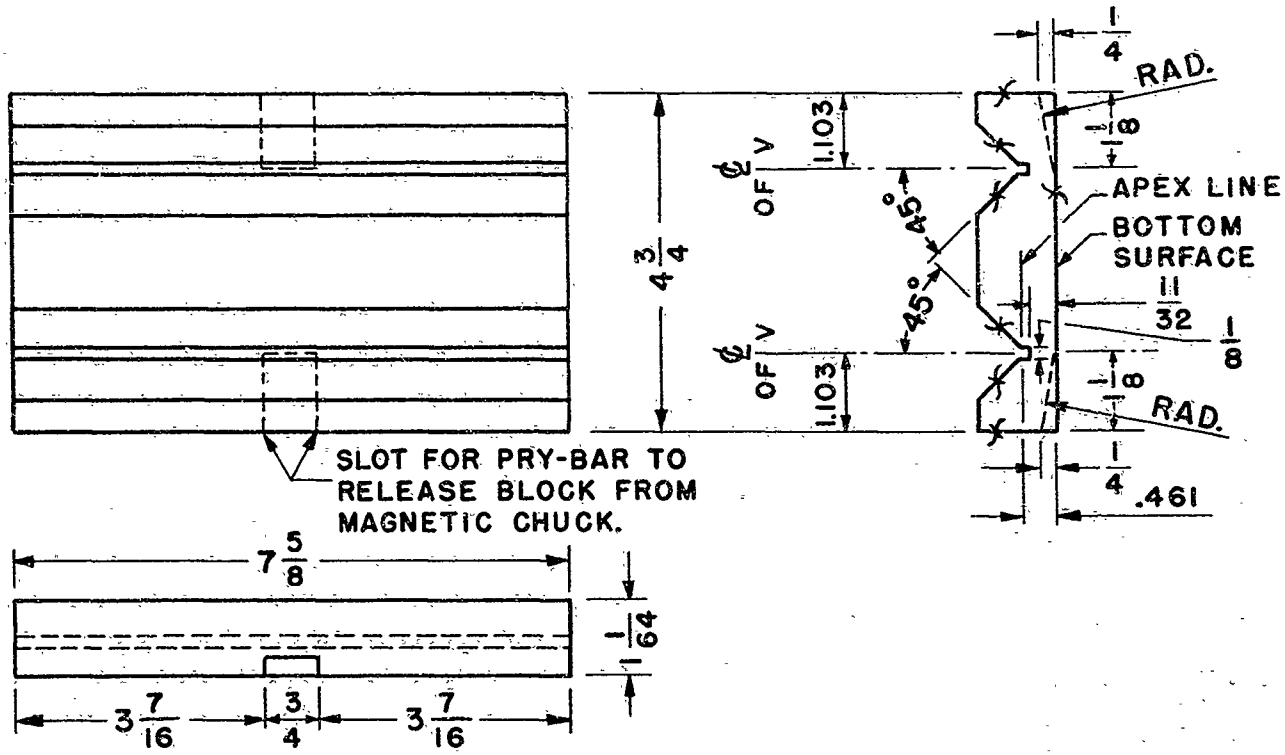

NOTE: ROUND ALL EDGES AFTER GRINDING

Anchor Optical Corporation

Figure 517.—Double Channel V-plate for Surface Grinder.

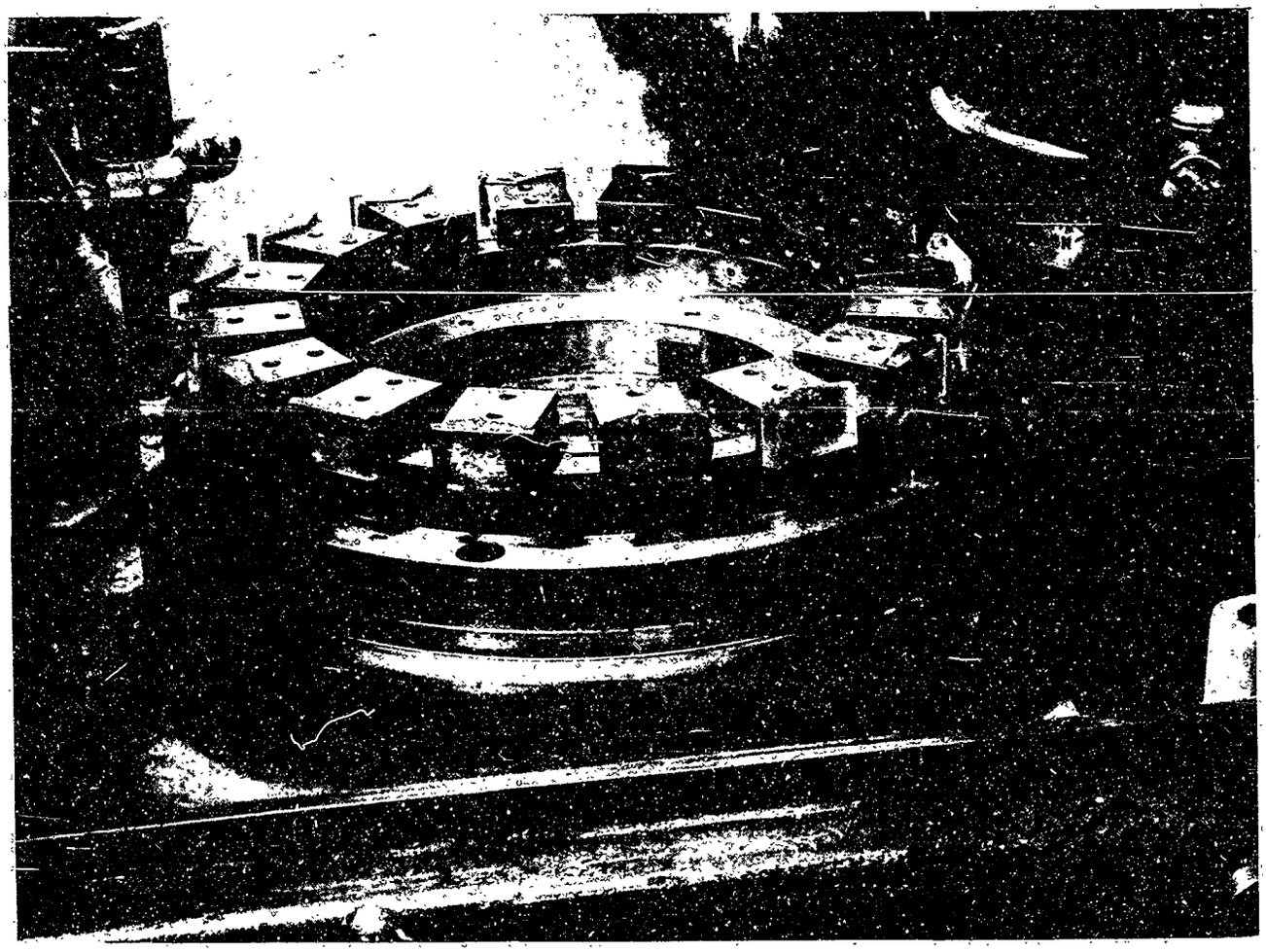

Figure 518.—Individual Fixtures Mounted on Magnetic Chuck Equipped with Pin Rings for Grinding Sides of Prism Blanks.

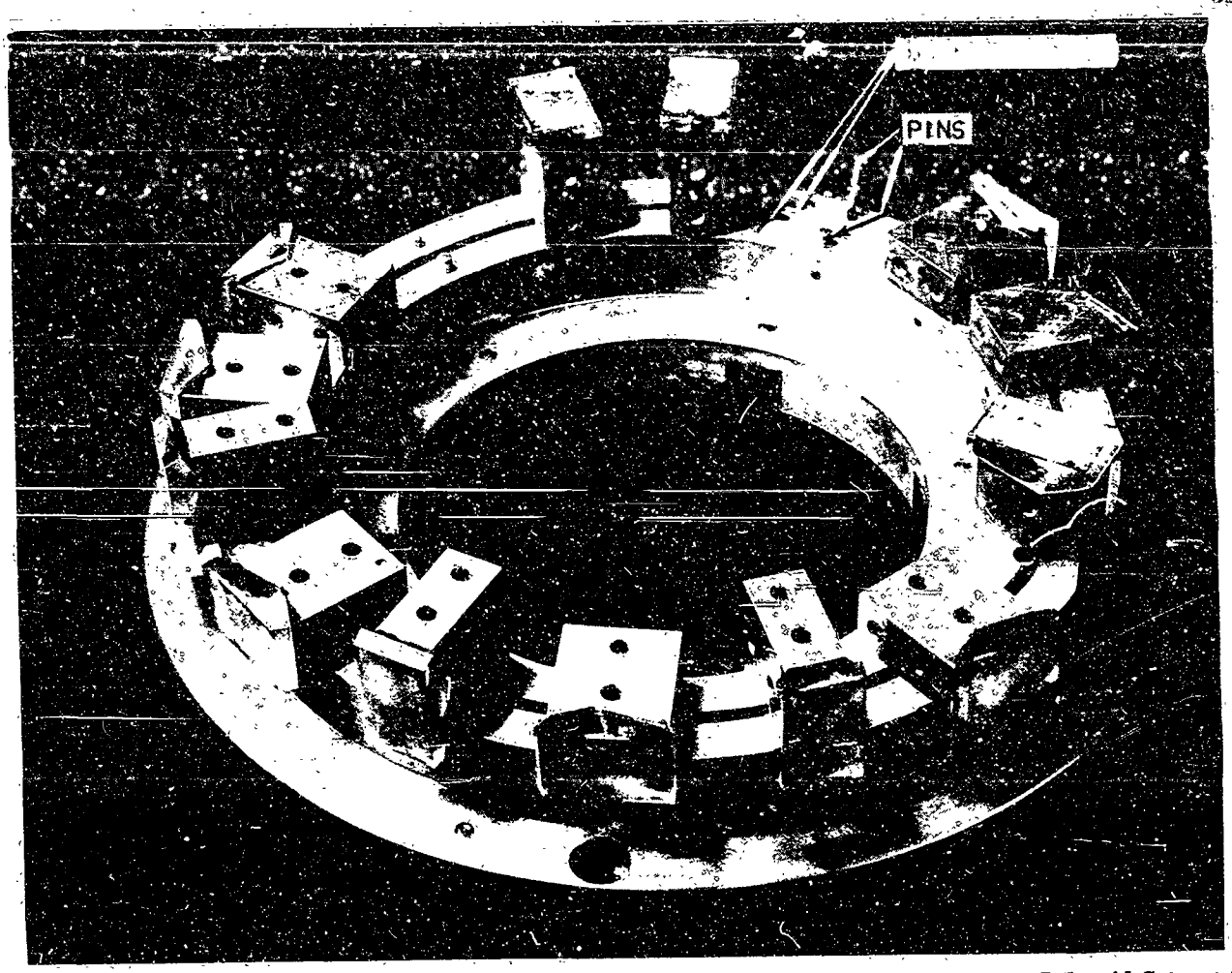

Polaroid Corporation

Figure 519.—Individual Fixtures in Different Positions for Grinding Glass Surfaces, Using Pin Rings.

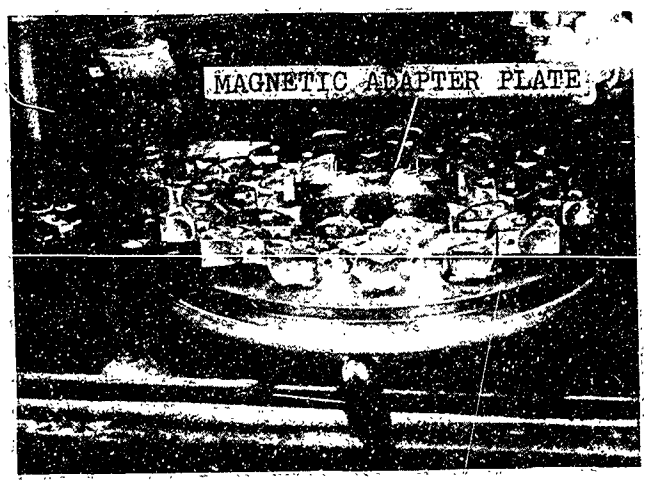

May Oil Burner Corporation

Figure 520.—Fixtures and Adapter Plate Mounted on Surface Grinder for Grinding Sides of Porro Prism Pressings.

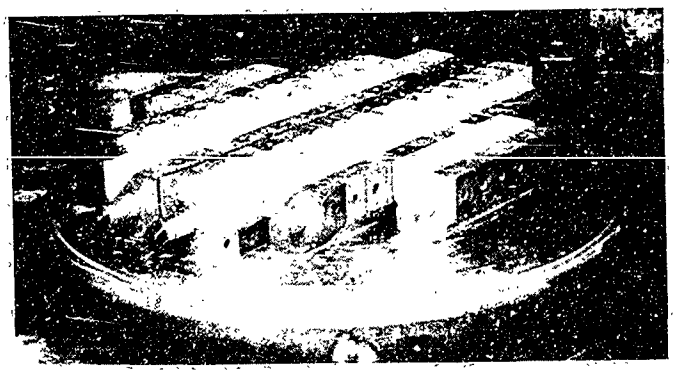

May Oil Burner Corporation

Figure 521.—Porro Prism Fixtures Mounted with Rods on Surface Grinder for Grinding 90° Faces.

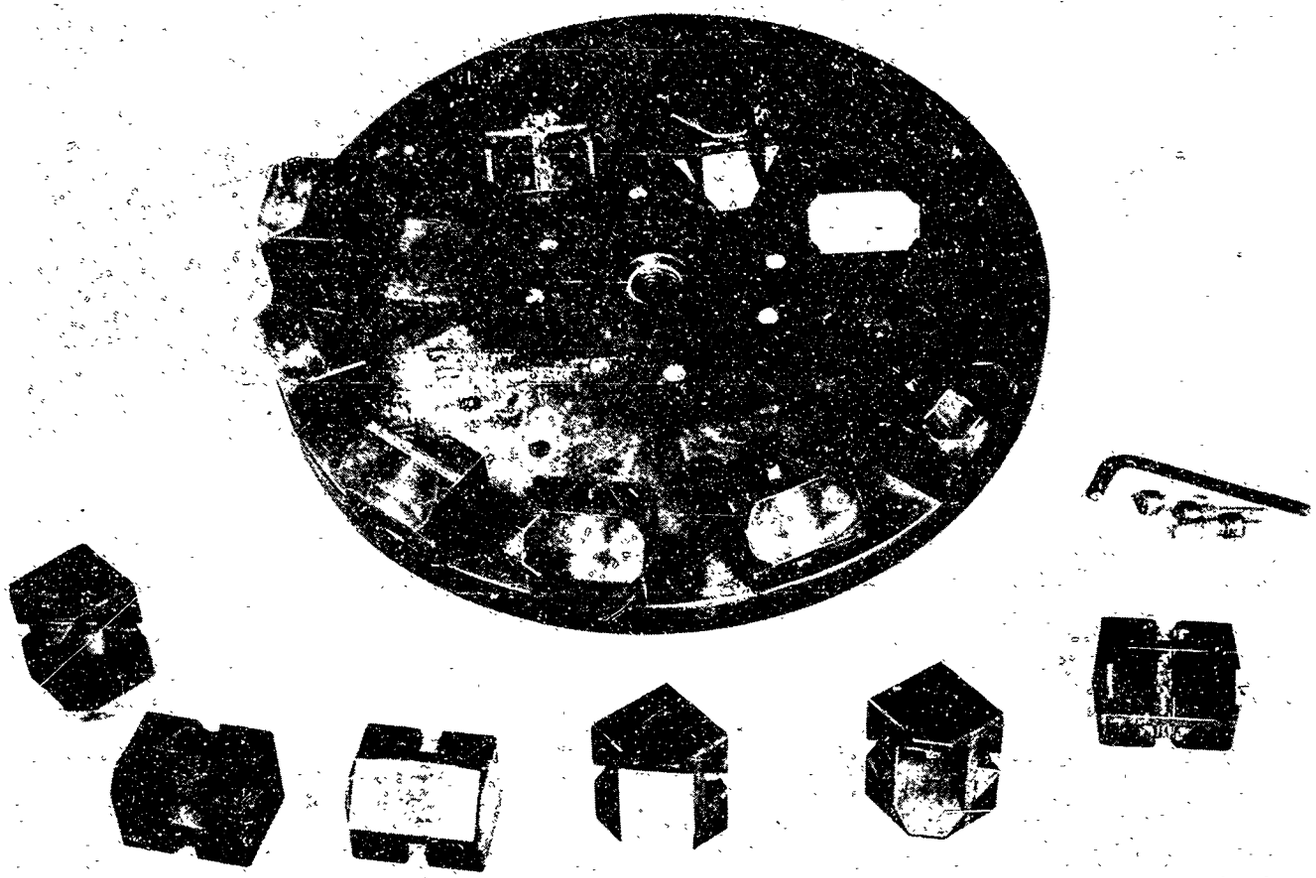

Optical Research, Incorporated

Figure 522.—Plate and Screw-type Fixtures for Grinding Roof Faces on Amici Prism Blanks.

PRODUCTION OF PORRO PRISMS BY VARIOUS MANUFACTURERS

Each paragraph heading which follows identifies the surfaces which are ground with a single mounting of the porro prisms in their proper fixtures.

Anchor Optical Corporation

90° Faces and First Side.—A porro prism pressing is mounted in a fixture of tool steel as shown in Figures 514, 515, and 516. The adhesive used for mounting is a mixture of one part crude yellow beeswax and five parts water white rosin. There is one fixture for each prism. The hypotenuse is used as a reference surface and one side rests against the side plate of the fixture.

Figure 516 shows 38 such fixtures held on the magnetic chuck with one face already ground to size. The fixture is turned through 90° to grind the second 90° face.

With the prisms still mounted, the same fixtures are laid with the side plates resting on the magnetic chuck. One side is ground flat, allowing sufficient glass to grind the second side to thickness.

Second Side.—The prisms are removed from the fixtures, mounted on a blocking plate with the finished side down, as shown in Figure 506 and the second side is ground to thickness. When grinding the second side of one type of binocular porro prism, 68 prisms may be mounted on one blocking plate. As there are about 1⅛ square inches per prism and 0.070 inch of glass to be ground off, this means that a total of about 5⅓ cubic inches of glass must be removed. A chuck speed of 41 rpm and a feed of 0.010 inch per minute is used until approximately 0.050 inch of glass has been ground off. Next the surface is checked for finish and the grinding continued to within 0.012 inch of the finished thickness. After the silicon-carbide type wheel has been dressed the grinding is continued to within 0.005 inch of the finished size. Finally the feed is reduced to 0.004 inch per minute and the chuck speed changed to 15 rpm for the last 0.002 inch.

Hypotenuse.—The prisms are removed from the plate used for grinding the second side to thickness, and mounted in a double row meehanite V-block as shown in Figures 514 and 517.

Three V-blocks are placed on the magnetic chuck of the Blanchard as shown in Figure 523 and the hypotenuse is ground.

May Oil Burner Corporation

Hypotenuse.—The pressings are mounted in a 90° V-block and ground to the proper dimension. The prisms are then removed from the fixtures.

90° Faces, Sides, and Top.—The prisms are mounted on individual fixtures made of hardened tool steel. (See Figure 524.) The fixture must be slightly thinner than the finished prism. Each face has a tapped hole for positioning two L-shaped clamps.

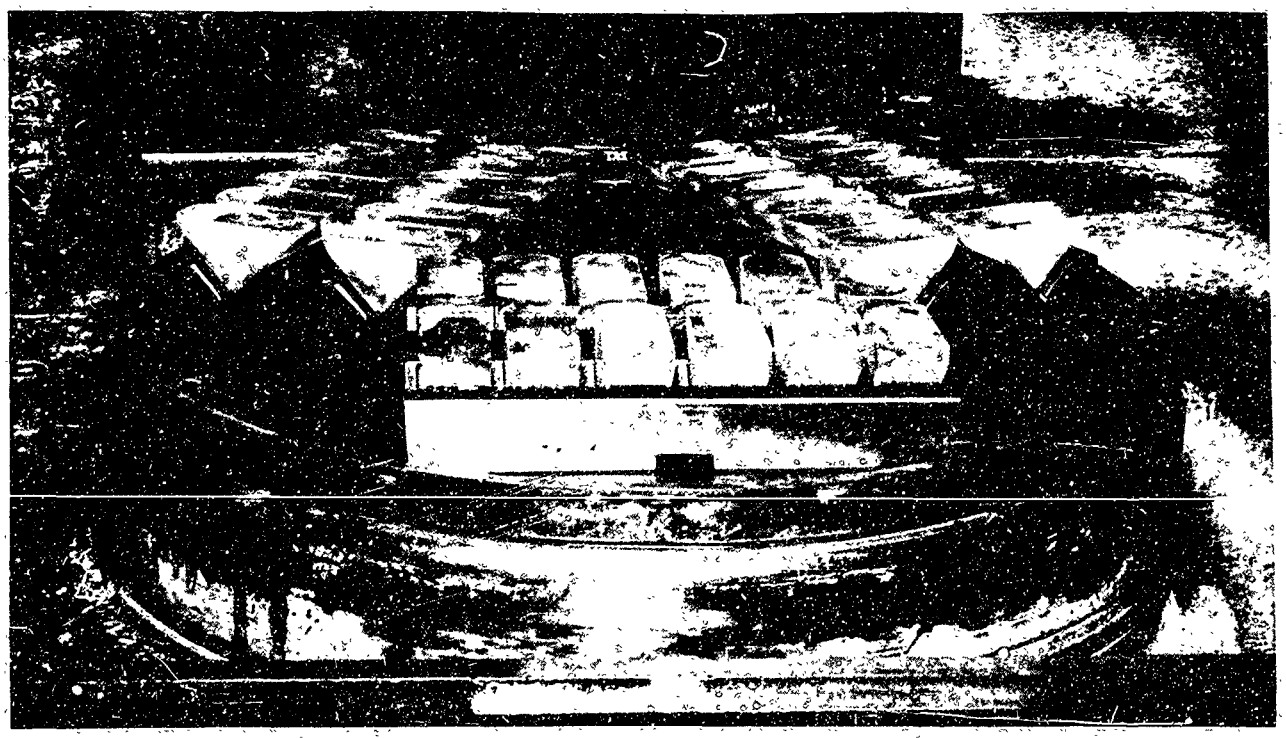

Anchor Optical Corporation

Figure 523.—Porro Prism Pressings Mounted on a Surface Grinder for Rough Grinding the Hypotenuse Faces.
(Official U.S. Navy Photograph)

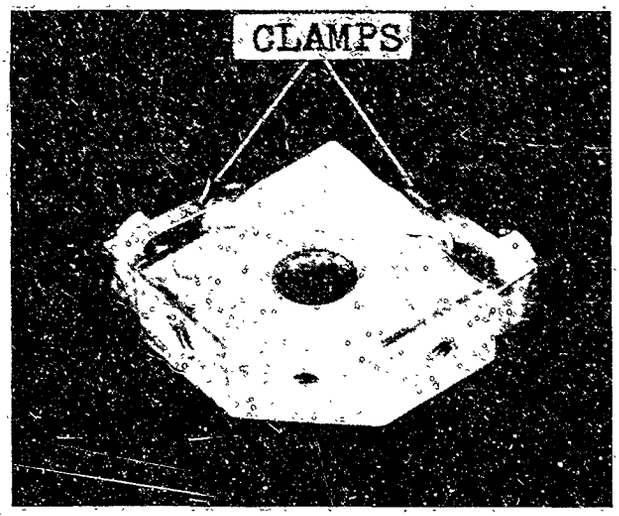

May Oil Burner Corporation

Figure 524.—Fixture for Grinding Porro Prism Sides and 90° Faces.

The base of the mounting jig has two levels (Figure 525). Two blocks fastened to the base plate on the high level are located to form a 90° V. A movable slide located on the lower level of the base plate has a 90° V-groove on the side facing the stationary V on the higher level. A spring preload attached to the back of the movable slide exerts the pressure necessary for accurate mounting.

The fixture is heated to 200°F. and a thin coating of stickum is applied to the mounting surface. The fixture is then placed in the V-groove on the higher level of the base plate, the movable slide is pushed back against the spring preload, and the prism pressing is placed so that the hypotenuse is in contact with the prepared side of the fixture. The top of the pressing fits into the V-groove of the movable slide. The prism rests on the lower level of the base plate. The slide is released centering the prism on the fixture, and the two L-shaped clamps are tightened with cap screws. The fixture is removed from the mounting jig and allowed to cool. The clamps and all excess stickum are removed, and the prism is ready for grinding.

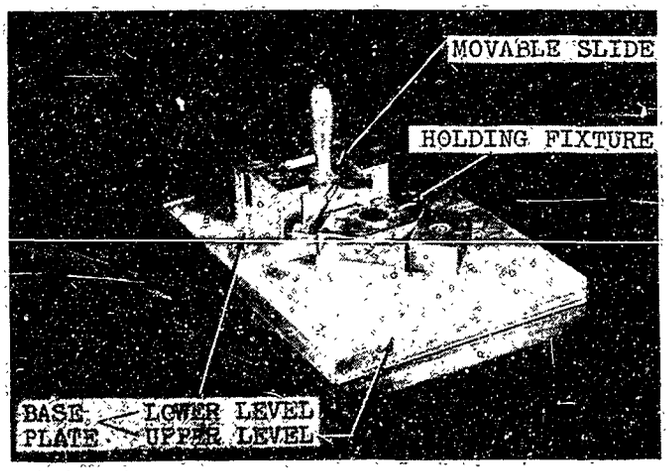

May Oil Burner Corporation

Figure 525.—Jig for Mounting a Porro Prism Pressing on an Individual Fixture.

Grinding operations are performed in the following sequence:

1. The first side is ground.
2. The fixtures are turned through 180° and the second side is ground.
3. The fixtures are positioned for grinding the first 90° face.
4. The fixtures are tipped through 90° and the second 90° face is ground.
5. The fixtures are rearranged for grinding the tops.

An adapter plate on which the fixtures are located is used for grinding the two sides. (See Figures 520 and 526.) The prisms are ground to thickness by removing approximately the same amount of stock from each side.

The adapter plate is then removed and the prisms are placed on the magnetic chuck (Figure 521) in two rows of 17, two rows of 13, and two rows of 6 each. A rod is passed through the hole in the center of the fixtures, making each row a unit of individual fixtures.

The prisms are arranged for grinding the tops as shown in Figure 527.

Bausch and Lomb Optical Company

First Side.—The pressings are mounted and ground on a blocking plate similar to that shown in Figure 506.

Second Side.—After grinding the first side, they are removed, turned over, and remounted for grinding the second side.

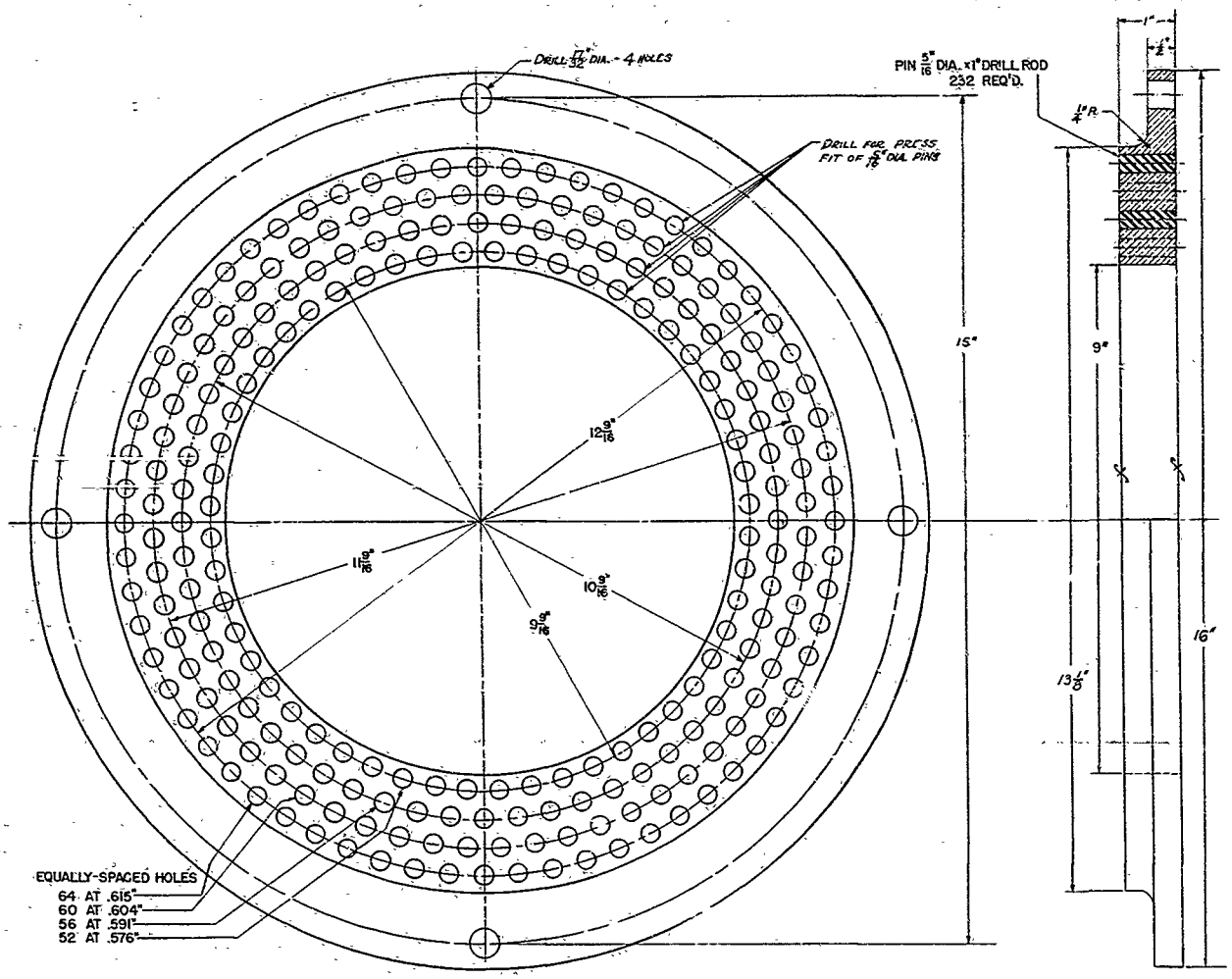

May Oil Burner Corporation

Figure 526.—Adapter Plate for Magnetic Chuck on Blanchard Grinder.

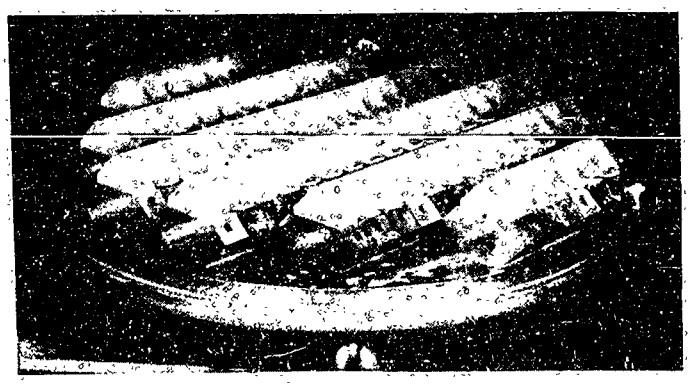

May Oil Burner Corporation

Figure 527.—Fixtures Mounted on Surface Grinder for Grinding Porro Prism Tops.

Hypotenuse.—The fixture for grinding the hypotenuse is a 90° V-block having two end plates. (See Figure 528.) One end plate is solid and is square to the V. The opposite end plate contains a spring-loaded plunger. The prisms are placed in the V-block, the plunger held back while the last prism is loaded, then released. The spring pressure clamps the pieces. The fixtures hold either five or seven prisms. Two of each size (making a group of 24 prisms) are placed on the chuck.

90° Faces.—The fixtures for grinding the 90° faces form two more groups, each group holding 24 prisms. Four fixtures are used in each group (see Figure 528). Two of these hold seven prisms, one holds six, and one holds

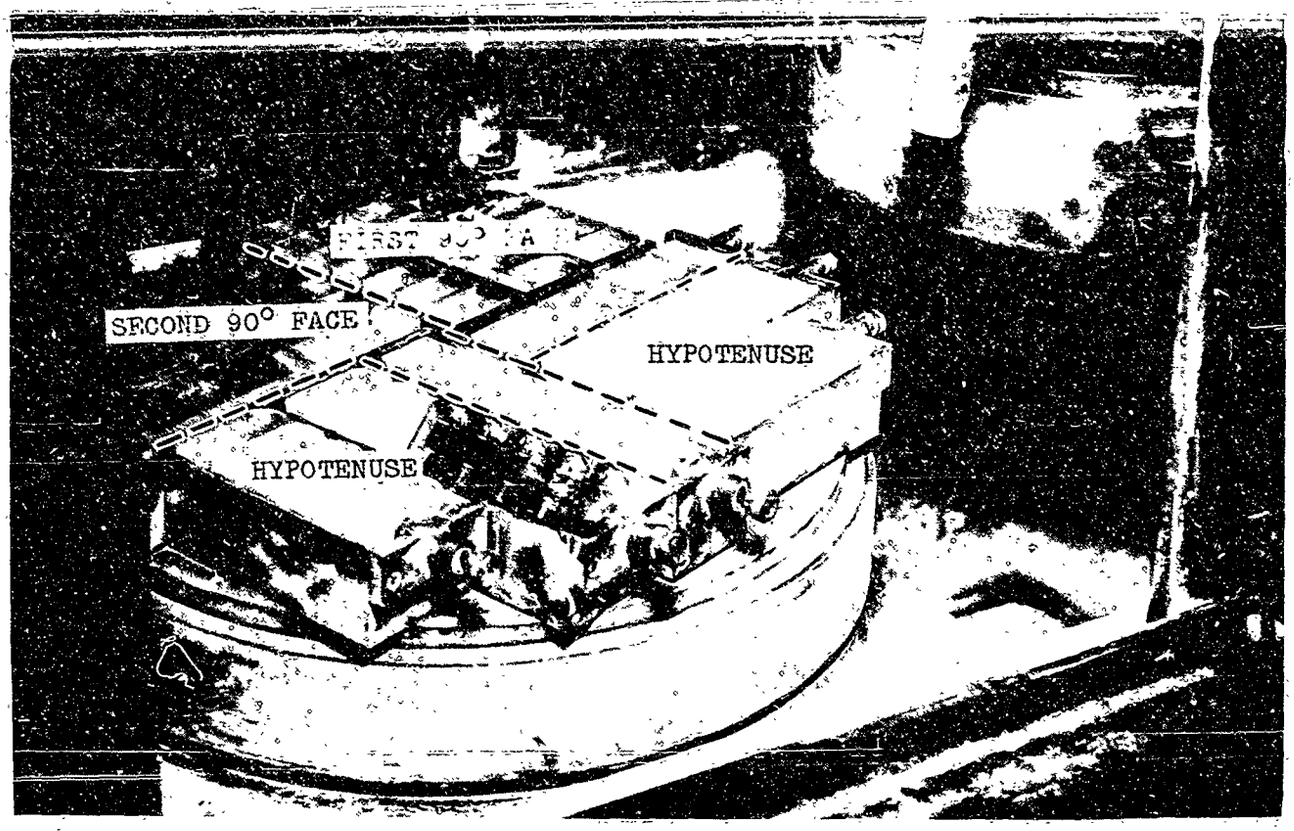

Bausch & Lomb Optical Company

Figure 528.—Porro Prism Fixtures Mounted on Surface Grinder for Grinding the Hypotenuse and Both 90° Faces.

four prisms. The two 90°-face fixtures are alike with the exception that one set is somewhat higher than the other. The fixtures are made with a 45° surface on which the ground hypotenuse is located. There are two end plates, one of which is solid and against which the side of the first prism is located. A rod connecting the end plates serves as a stop for the vertical 90° faces. The second end plate contains the spring-loaded clamping plunger.

These fixtures are designed to allow for definite stock removal from each surface (the hypotenuse and each 90° face), the locating surfaces being progressively higher from the first set of fixtures to the third. This design permits grinding to the same setting on all surfaces and removing the desired predetermined amount. The entire setup of fixtures on a Blanchard chuck is shown in Figure 528.

Polaroid Corporation

It has been the general practice in the optical industry, after rough and fine grinding, to remount elements for the final polishing. Prism mounting and blocking methods are described in Chapter 9. However, fixtures for holding 90° prisms have been designed which may be transferred, with no change of mounting, from the surface grinder to the polishing machines One such method is as follows:

Sides.—The pressings are mounted on blocking plates and the two sides are ground flat and parallel on a surface grinder (similar to Figure 506).

90° Faces.—After removal from the blocking plate and cleaning, they are mounted on individual fixtures (Figures 513 and 529). The fixtures are heated on a hot plate, wax is melted on the contacting surfaces, the prisms are placed on the fixtures which are then located in the mounting jig as shown in Figure 529. The movable slide-block is used to push the fixtures and prisms into the 90° V. The side plate of each fixture being down, the quick-acting toggle clamp is pressed against the

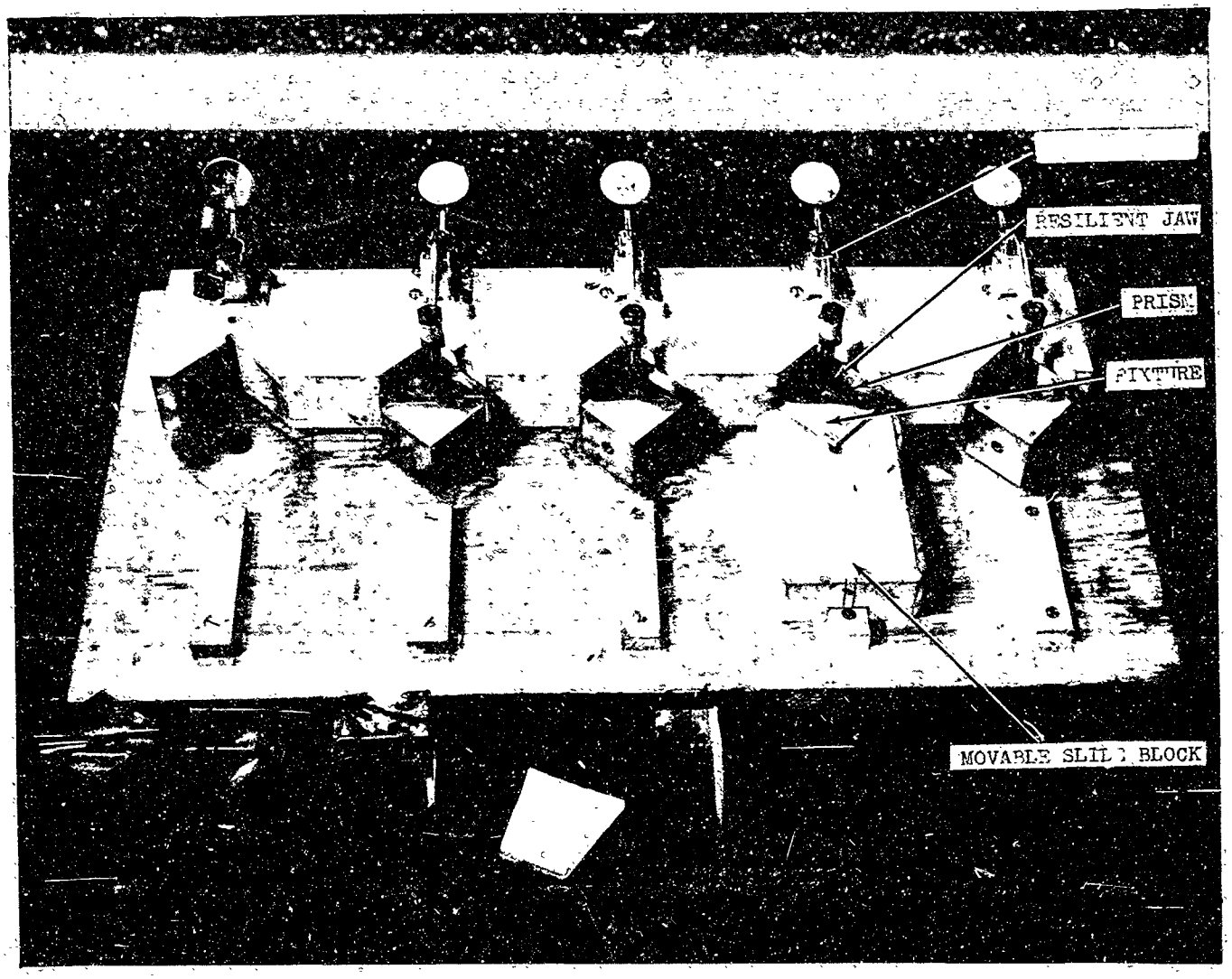

Polaroid Corporation

Figure 529.—Jig Used for Mounting Right-angle Prism Blanks to Individual Fixtures.

prism. This clamp has a resilient jaw which allows a cushion effect in clamping and eliminates local strains. The clamps are adjusted for fifty-pound pressure. Stations two, three, four, and five show prisms clamped in fixtures. After cooling, excess wax is cleaned from the locating surfaces and the individual fixtures are fastened to a blocking plate as shown in Figure 530. The fixtures are screwed to the plate and any exposed screw holes are then protected with masking tape.

The elements are ground first with a 120-grit diamond wheel then transferred to another machine and fine ground using a 400-grit diamond wheel. The plate and prisms are then transferred as a single unit to a polishing machine. After polishing, a protective coating of lacquer is applied to the polished surfaces and the individual fixtures are turned through 90° and fastened to the plate again. The second 90° face is then ground and polished in the same manner.

Hypotenuse.—After the prisms are removed from the fixtures and cleaned, they are mounted in a plate having 90° V-grooves similar to those described previously. In order to keep

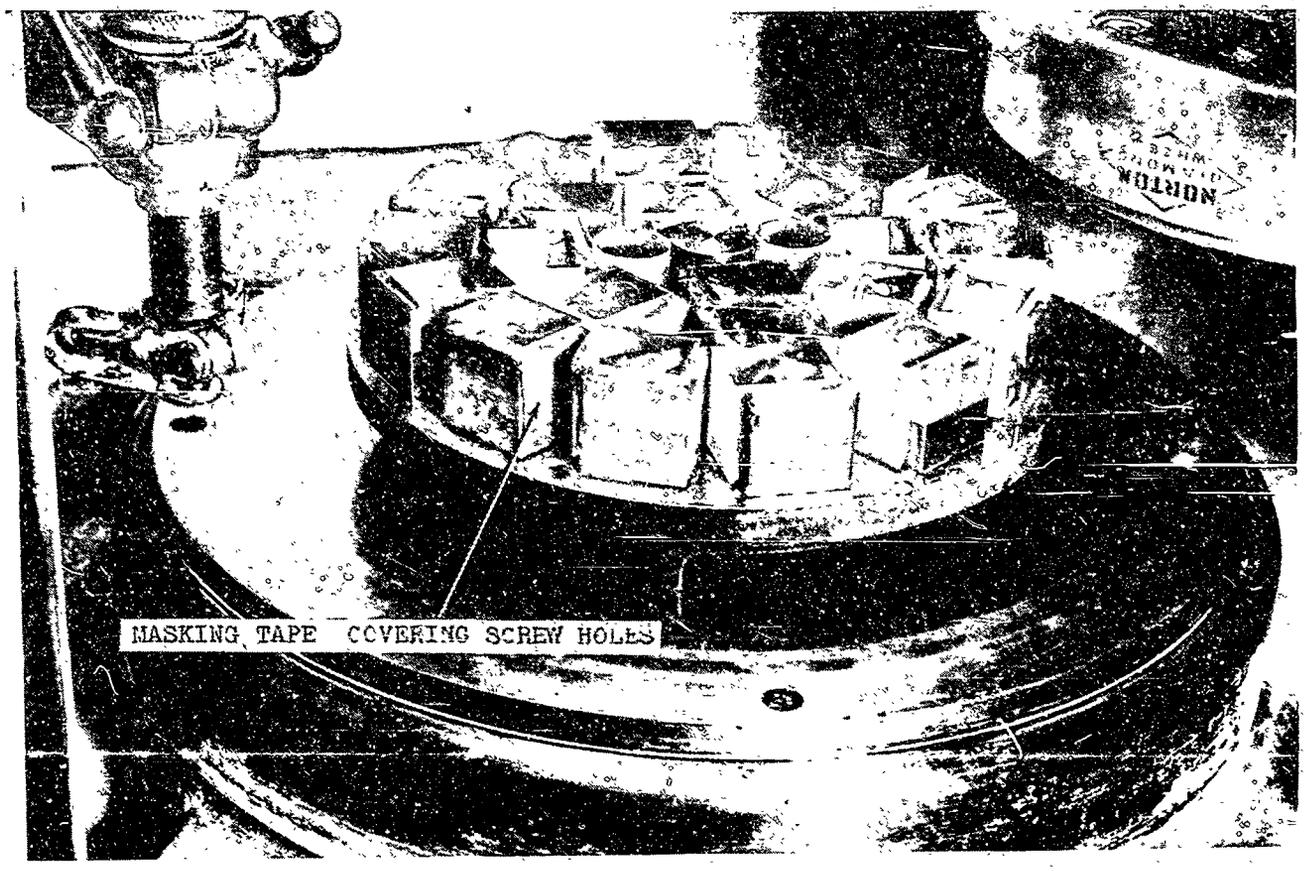

Polaroid Corporation

Figure 530.—Individual Right-angle Prism Blanks in Fixtures Mounted with Screws on a Blocking Plate.

from scratching the polished surfaces, thick wax-impregnated paper is placed between the polished surfaces of the prisms and the V-blocks. Ordinary carbon paper is quite satisfactory because it is very uniform and free from specks of wood pulp or other impurities which might vary the thickness of the paper. In mounting the prisms in the V-block, they are spaced $\frac{1}{8}$ to $\frac{3}{16}$ inch apart to insure their location with respect to the 90° surfaces. When the block has cooled sufficiently to set the pieces, melted paraffin is poured between the prisms giving them additional support.

The hypotenuse is ground, first using the 120-grit diamond wheel then the 400-grit diamond wheel and then the whole group of prisms is transferred as a unit to the polishing machine.

Frankford Arsenal

Sides.—The glass is mounted on a blocking plate, and the first side is ground as already described in connection with vertical-spindle rotating-table surface grinder operation. The operation is repeated for the second side.

90° Faces.—The fixture is mounted on a surface grinder, and the first 90° face is ground. The fixture is then tipped through 90°, and the same procedure is followed for the second 90° face.

Slab Glass.—Figure 531(a) shows a compression-screw clamp fixture used for holding slabs preparatory to rough grinding the 90° prism faces. The slab has been ground to thickness and held to a close tolerance so that a collective error is not set up on the side angle. The slabs are set in the fixture against the stationary end and held in place with the com-

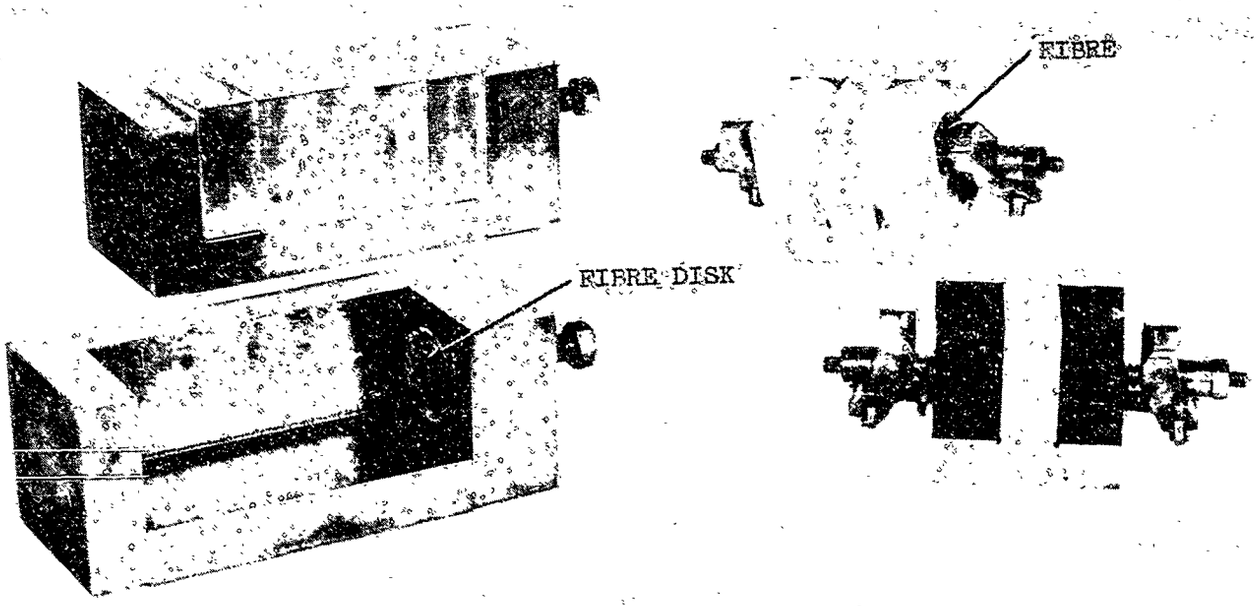

(a) For Slab Glass (b) For Formed Blanks

Figure 531.—Clamping Fixtures for Grinding 90° Angles.

pression screw. A fibre disk at the end of the screw bears against the glass surface permitting the use of sufficient pressure to hold the glass rigid. The fixtures and surfaces of the slabs must be thoroughly clean.

Pressings.—Figure 531(b) shows a fixture used when the 90° faces are to be ground on prism pressings. The fixture has a center fin perpendicular to the hypotenuse surface, which enables two prisms to be ground simultaneously. The pressings are held in position by two adjustable clamps with a fibre face.

Hypotenuse. — After the prisms are removed from the fixture, they are cleaned, then mounted in a 90° V-block, set on the magnetic chuck, and the hypotenuse is ground.

Robinson–Houchin Optical Company

Sides.—The machine shown in Figure 532 performs the first operation on the prism pressing, that of grinding both sides simultaneously (in a manner similar to straddle milling), so that they are parallel to within 0.00025 inch. There are two spindles in line with each other on each of which is mounted a 100-grit 4-inch-diameter diamond cup-type wheel. These two wheels, which face each other and revolve in the same direction, are driven by a 1-horsepower motor. They must be notched as shown in the figure to permit the coolant to circulate between the diamond wheels and the glass.

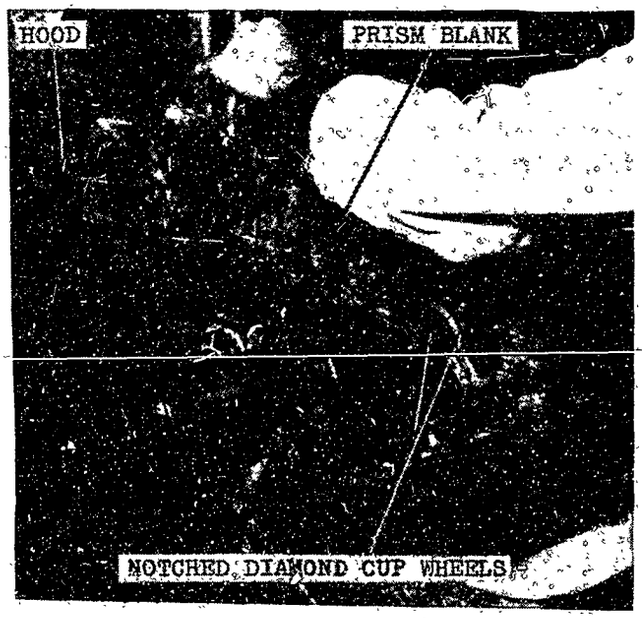

Robinson–Houchin Optical Company

Figure 532.—Grinding Both Sides of a Porro Prism Blank Simultaneously.

The prism is clamped in place with a special quick-acting cam-type clamp. The hood is pulled over the machine and the coolant pump is turned on. The coolant is forced between the two cup grinding wheels and the actual grinding operation is started.

A valve-controlled oil dash-pot is used to regulate the speed of travel of the prism between the two diamond wheels.

Hypotenuse and 90° Faces.—A prism is placed in a holder which swings the prism into position for clamping. (See Figure 533.) This is accomplished by pressing a foot pedal, swinging the prism into position, releasing the foot pedal, and allowing the spring pressure to be exerted against the prism. This pressure secures the prism and prevents slippage during the grinding operation. The notched 120-grit diamond wheel is carried on a traversing slide which completes one grinding cycle, returns to the starting position, and stops. The operator turns the prism to the next position and locks the head. The slide traverses the grinding cycle and the second surface of the prism is completed. The third surface of the prism is ground by the same process and the prism is then removed by releasing the spring pressure.

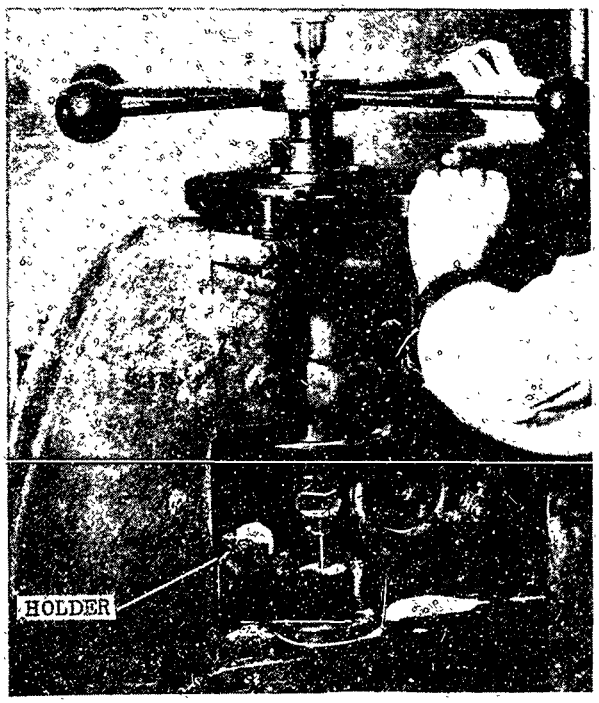

Robinson–Houchin Optical Company

Figure 533.—Machine for Grinding the Hypotenuse and Both 90° Faces of a Porro Prism Blank.

Ends.—The machine shown in Figure 534 is designed for grinding the radius on the ends. A cam is used to control the contour of the prism.

Another machine for performing the same operation has already been described in Chapter 4.

Universal Camera Company

The machines described below are used for grinding the sides, tops, 45° corners on the tops, and the ends of porro prisms to size. They are all built and operate on the same principles.

1. Prism Side Grinding Machine (Figure 535).
2. Prism Top-and-45°-Corners Grinding Machine (Figure 536).
3. Prism Round-End Grinding Machine (Figure 537).

These machines consist of a large clamping wheel which brings the prisms between a series of grinding wheels. The wheels are mounted on shafts which are housed in a large single casting. The grinding wheel shafts have a direct pulley drive to the motor, whereas the clamping wheel receives its motion from a speed reducer (mounted on top of the casting) which also has a direct drive to the motor. This arrangement permits a slow feed and a high grinding speed from a single source of power.

Attached to the front part of the casting is a basin with facilities for filling and draining. When filled with coolant, the grinding wheels and the lower half of the clamping wheel are

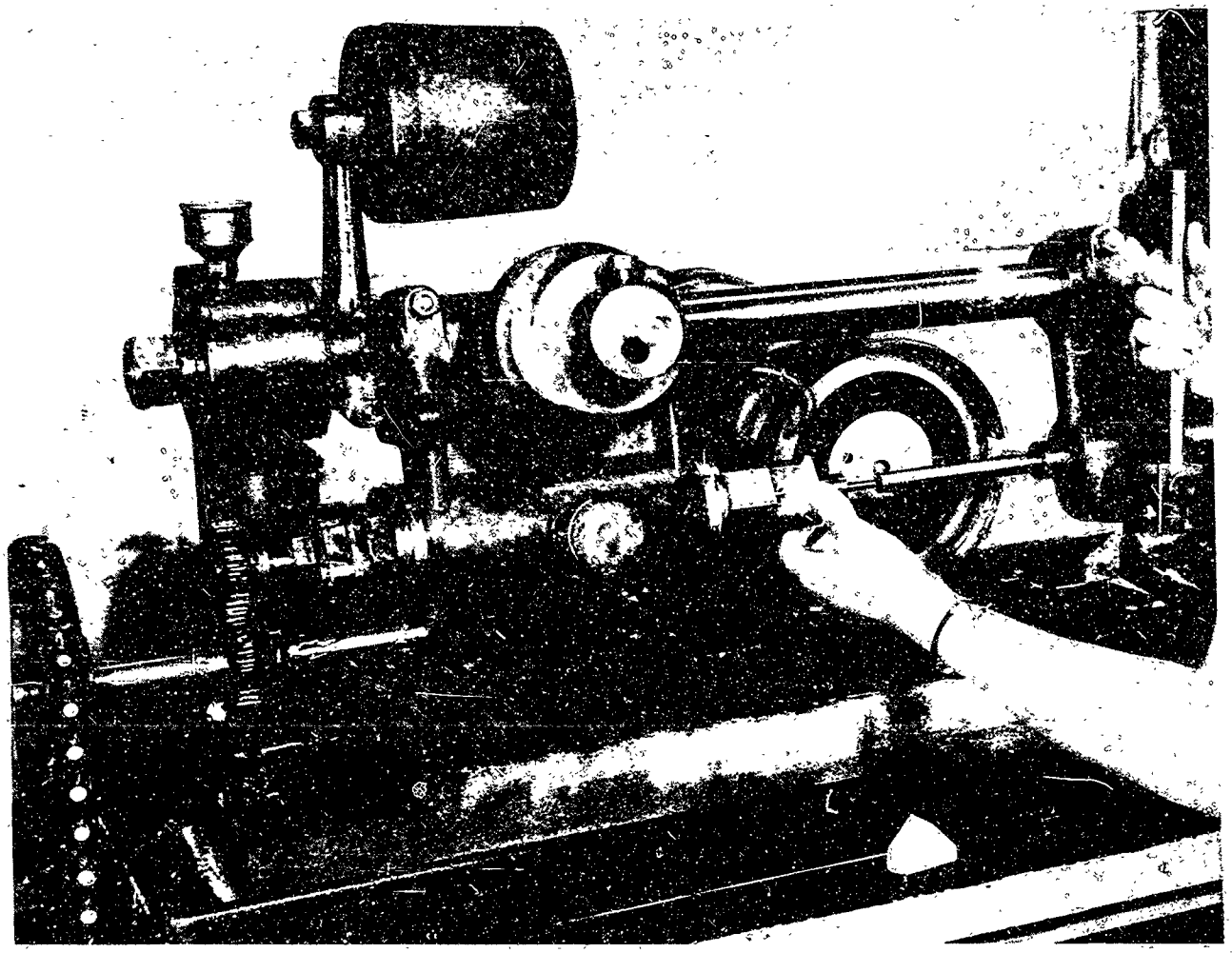

Robinson–Houchin Optical Company

Figure 534.—Rounding the Ends of a Porro Prism Blank.

completely submerged. A helical coil of copper tubing containing a continuous flow of cold water is used to reduce the temperature. It rests inside the basin away from the wheels.

The wheel holding the prisms contains a number of clamping levers set in recesses around the periphery. These levers are actuated by springs and are opened or closed according to the position of the wheel. The opening and closing action is accomplished by having one end of the lever ride on a cam mounted on the housing around the wheel's shaft, (Figure 538). This allows the piece of glass to be firmly locked in position while it is being cut, and then removed easily when brought away from the cutting wheels.

To prevent a piece of glass from falling out before the clamping wheel has reached the closed position, a retaining plate is mounted between the wheel and the casting. Level with this plate on the outer side of the wheel is a pressure plate (see Figure 538). Each set of pressure and retaining plates is used to line up the prisms so that an equal amount of glass is exposed on either side of the clamping wheel.

There are three series of diamond grinding wheels between which the prisms must pass. Each operation grinds the prism closer to the desired form, the finishing wheel finally giving it the correct shape. (See boxes in lower left hand corner of Figures 538, 539 and 540.)

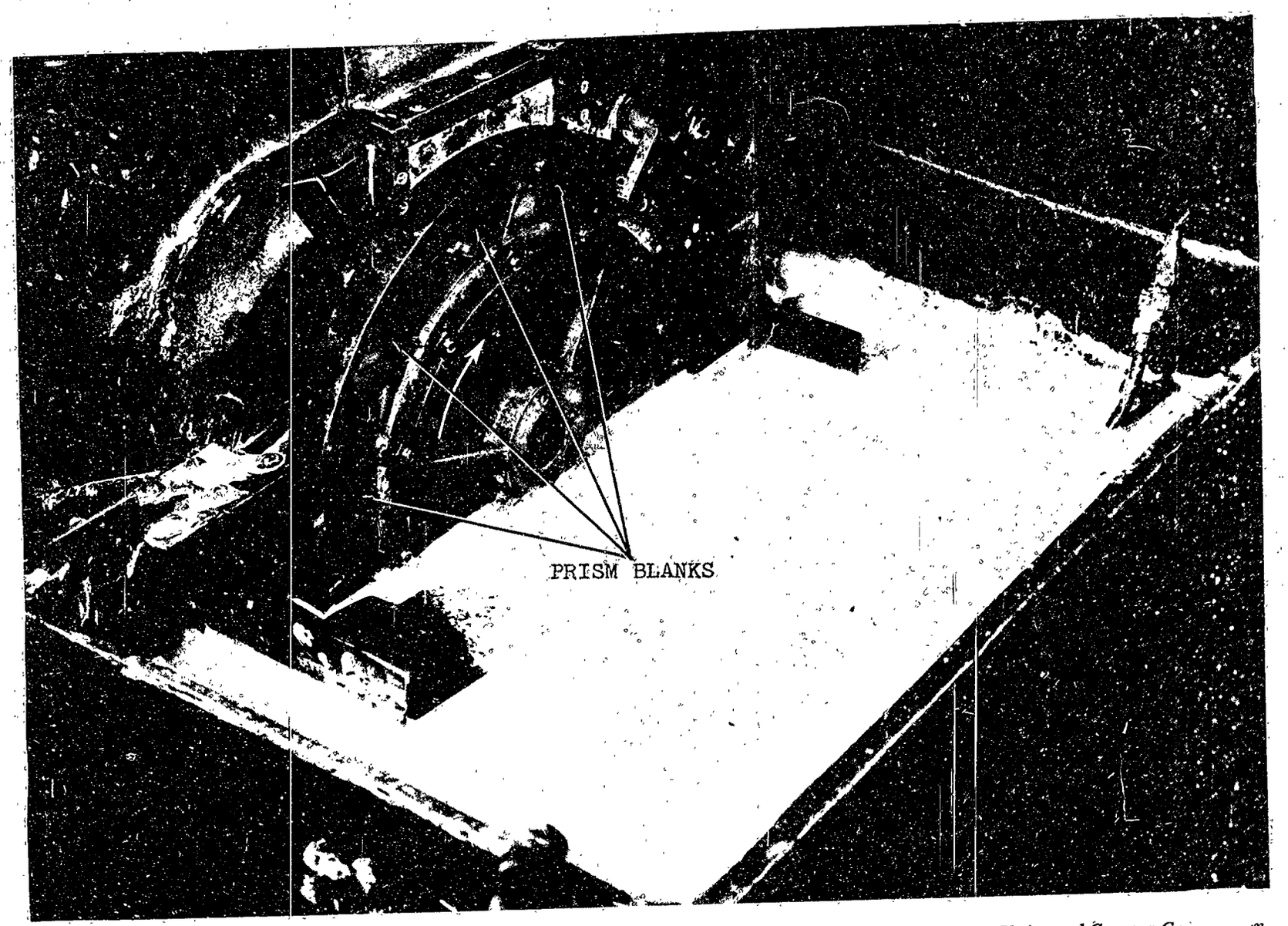

Universal Camera Co.

Figure 535.—Grinding Both Sides of Porro Prism Blanks Simultaneously.

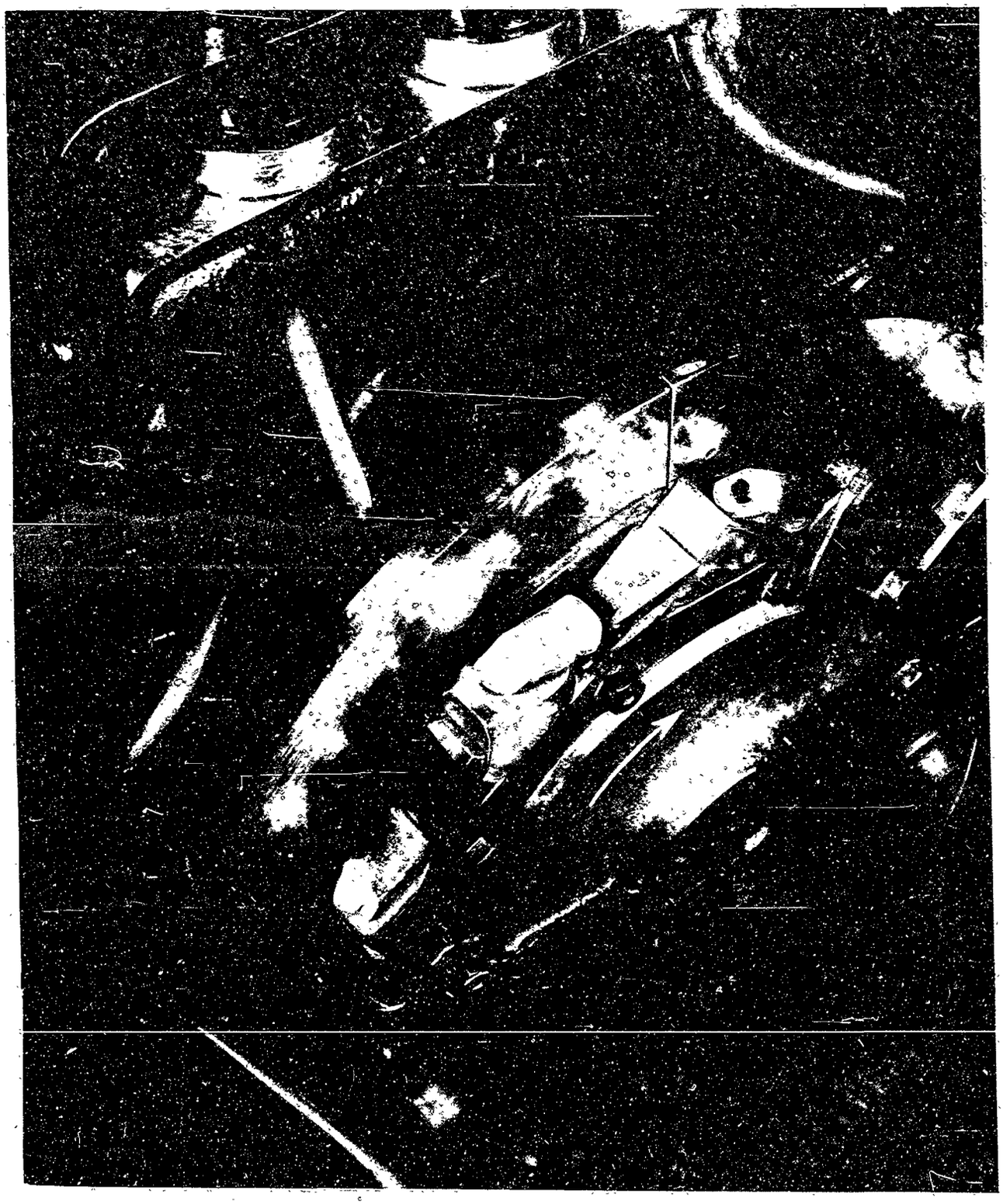

Universal Camera Corporation

Figure 536.—Grinding the Top and 45° Corners on the Top of Porro Prism Blanks Simultaneously.

Universal Camera Corporation

Figure 537.—Rounding the Ends of Porro Prism Blanks.

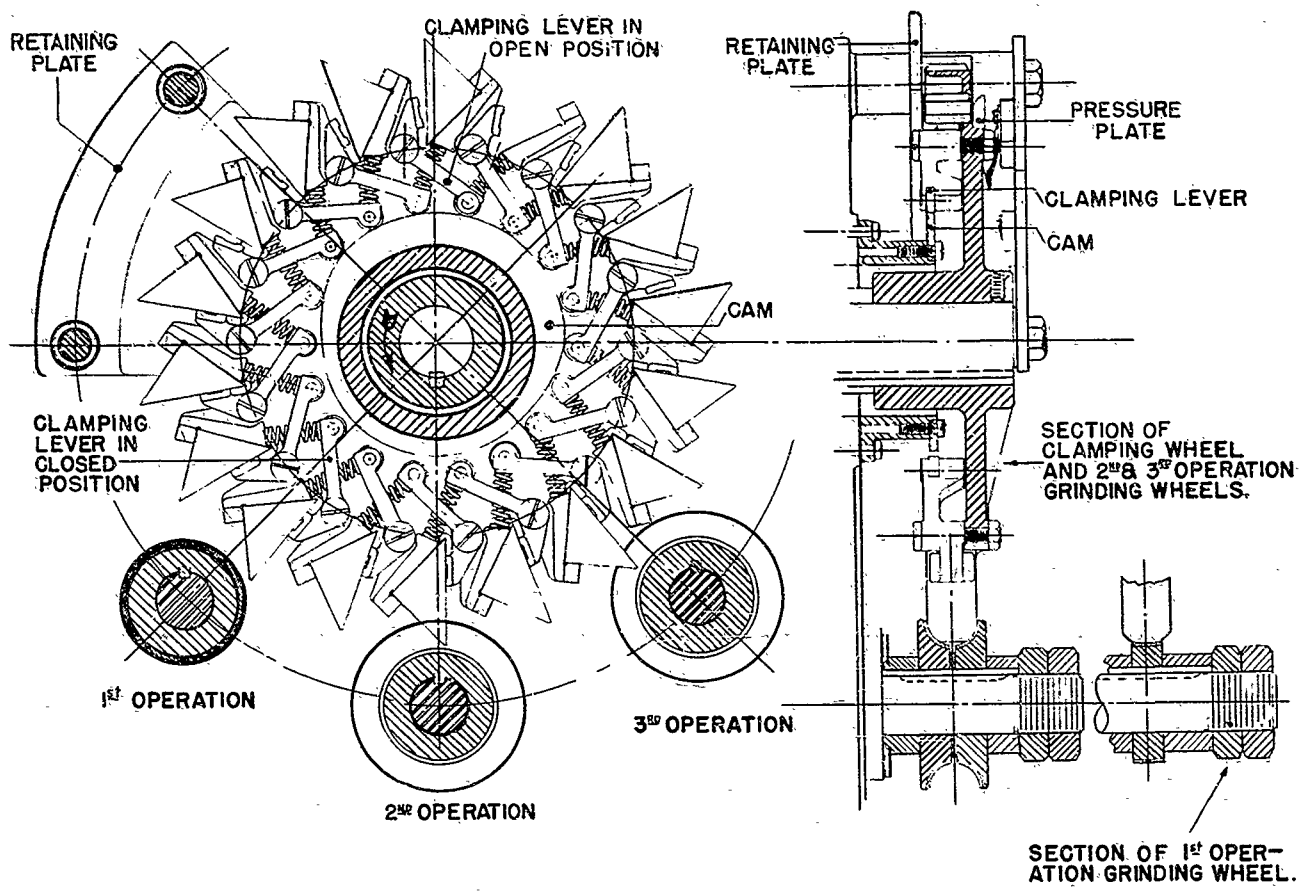

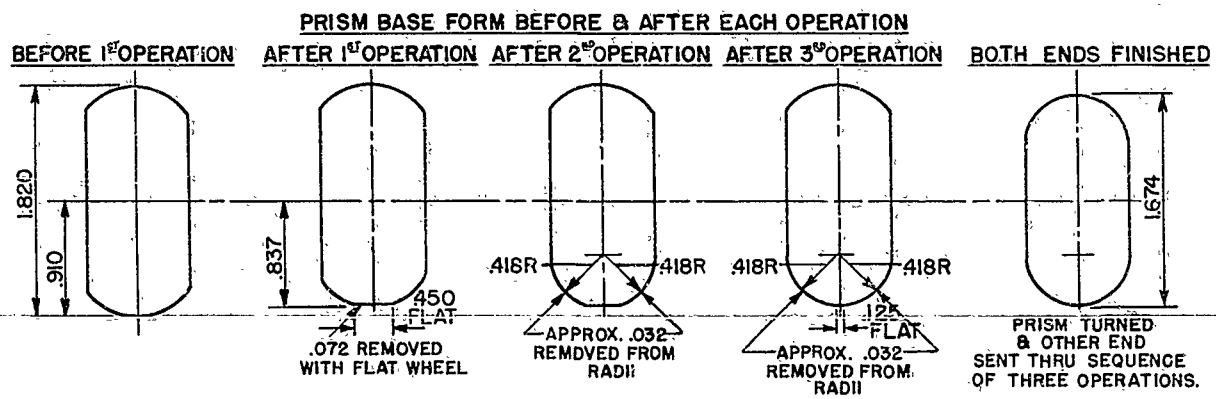

Universal Camera Corporation

Figure 538.—Layout of Clamping Wheel for Rounding the Ends of Porro Prism Blanks.

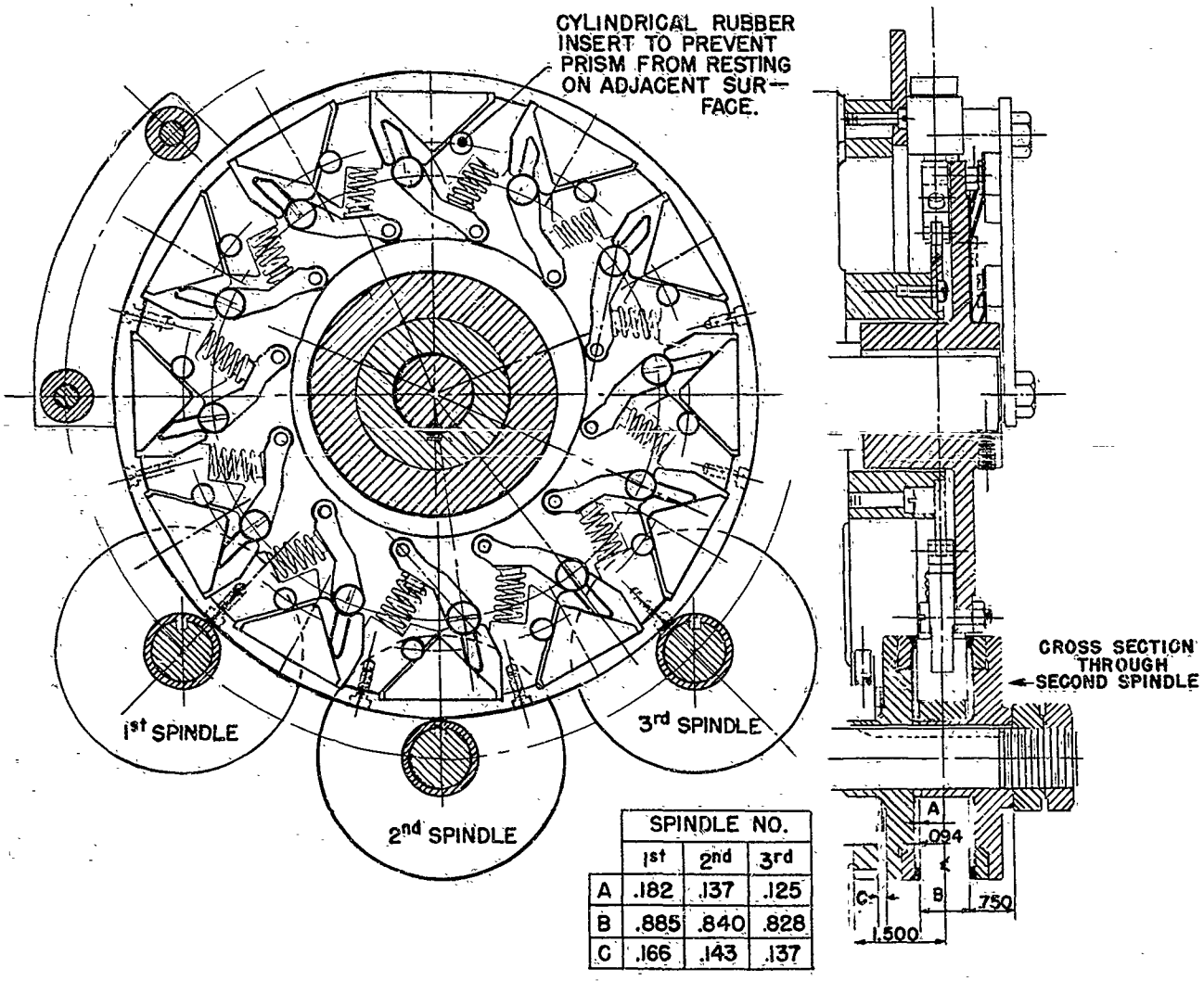

	SPINDLE NO.		
	1st	2nd	3rd
A	.182	.137	.125
B	.885	.840	.828
C	.166	.143	.137

PRISM DIMENSIONS BEFORE AND AFTER DIFFERENT OPERATIONS

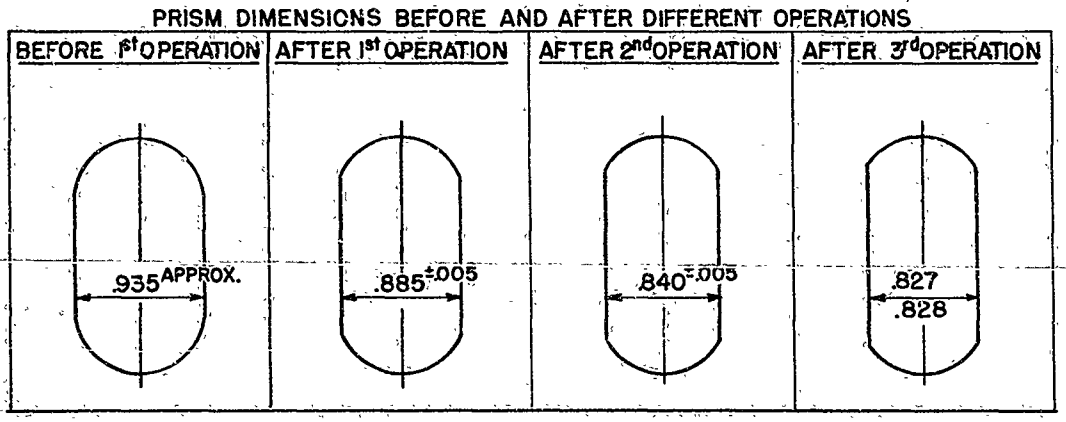

Universal Camera Corporation

Figure 539.—Layout for Grinding Both Sides of Porro Prism Blanks.

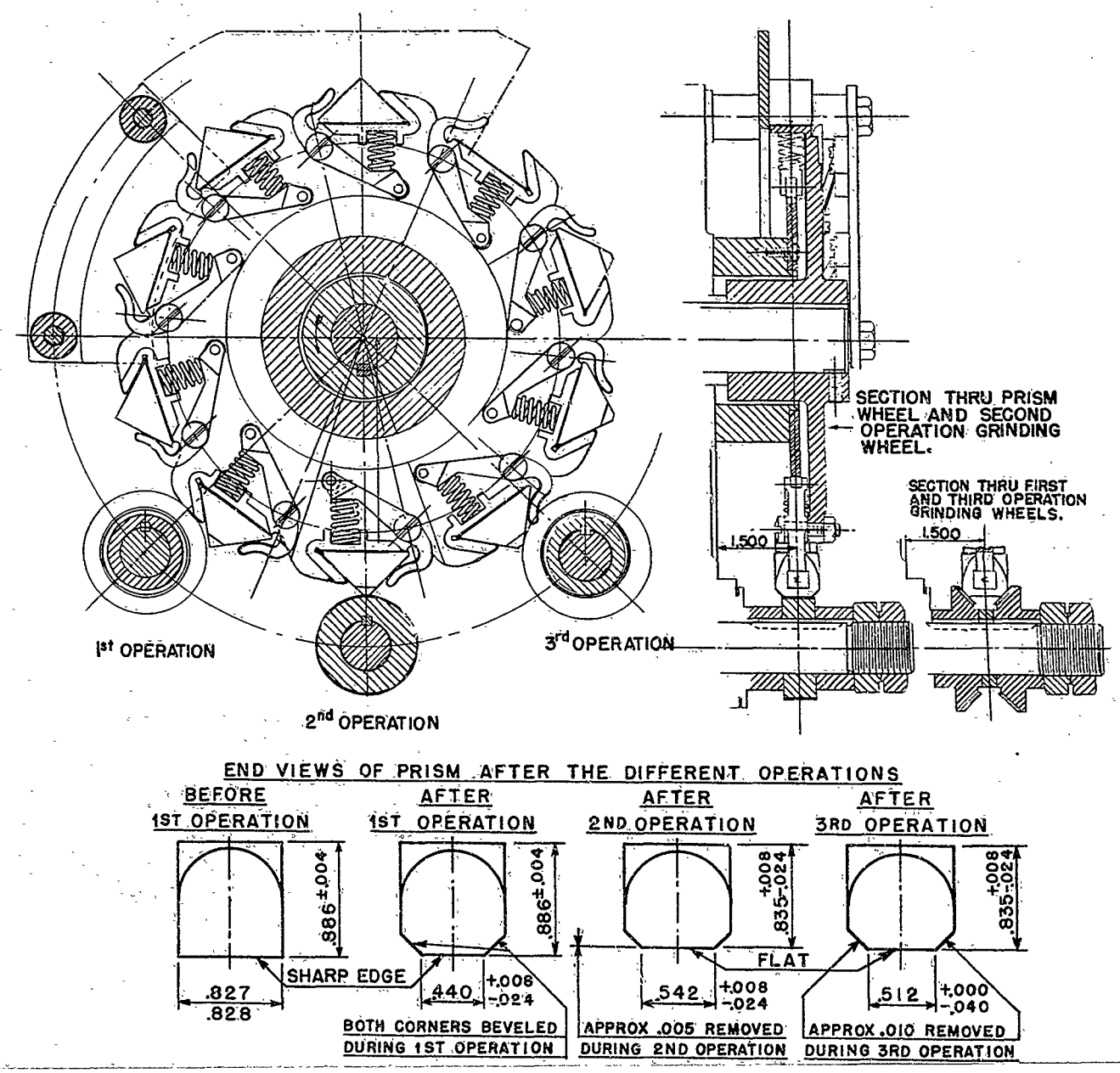

Universal Camera Corporation

Figure 540.—Layout for Grinding the Top and 45° Corners on the Top of Porro Prism Blanks.

The dimensions produced by each forming action can be controlled, and the wear on diamond wheels can be compensated by three adjustments:

1. Each forming operation is accomplished by two wheels spaced by means of arbor shims. The spacing between the wheels may be regulated by adding or removing one or more shims.

2. The shafts, on which the diamond wheels are mounted, can be adjusted so that the relative position of the diamond and the clamping wheels may be regulated.

3. The shafts can move in or out through the castings. This movement lines up the grinding wheels permitting equal cutting of both sides of the prism.

The details of the clamping and diamond wheels vary and are adapted to the exclusive function of each operation.

Sides.—The sides of the prism are ground with respect to the base (hypotenuse) face as shown in Figure 535. A cylindrical rubber plug, inserted in the wall adjacent to the blank side of the prism, supports and raises the prism above the wheel's recessed surface (Figure 539) in the position necessary for this operation.

Each clamping wheel is designed to expose that part of the prism which is to be ground. The contour of the diamond wheels is the opposite of that desired on the finished prism. In the side grinding machine, a set of diamond wheels grind simultaneously both sides of the prism.

Top and 45° Corners on the Top.—The top-and-45°-corners grinding machine (see Figures 536 and 540) has only a single edge to reduce. Thus the prisms in this machine, as well as those in the side grinding machine, go through each operation only once.

Ends.—The prism round-end grinding machine (Figures 537 and 538) can expose only one end at a time, therefore this process is repeated for the second end.

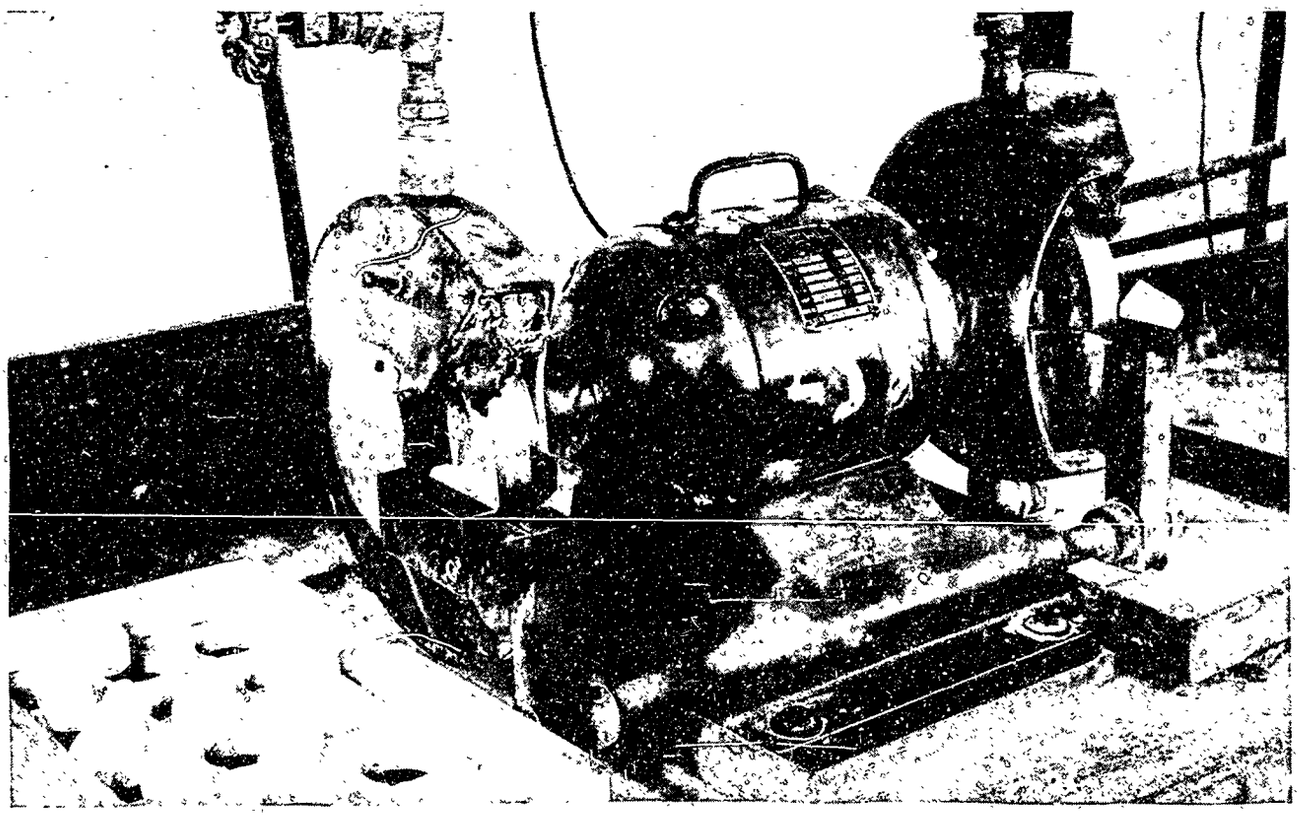

Optical Research, Incorporated

Figure 541.—Grinding the Top and 45° Corners on the Top of Porro Prism Blanks.

Optical Research Company

Top and 45° Corners on the Top.—The machine shown in Figure 541 is a bench-type double-end tool grinder. The end play of the shaft of the motor has been reduced to conform with the dimensional tolerances of the prism being ground. The machine is equipped with two 'cup type' diamond wheels, which permit grinding across the entire face. In addition, slides are provided as shown, to control the angle and depth of the grinding.

The top of the prism is removed by the wheel on one side and the corners are successively removed by the wheel on the other side. In these operations, the prisms are fed in by hand and guided by the slides.

Eastman Kodak Company

The grinding operations are performed on a horizontal milling machine adapted to grind glass. The diamond-charged wheel rotates horizontally and oscillates along the axis of rotation. (See Figure 502.)

Sides.—Porro prism pressings are ground parallel and to thickness either by hand as described in Chapter 4, or by automatic machinery.

Hypotenuse.—After grinding to thickness, the prisms are mounted for grinding the hypotenuse. This is done in V-blocks with six sections. Each section holds the prisms in place and aligns them with reference to their ground sides.

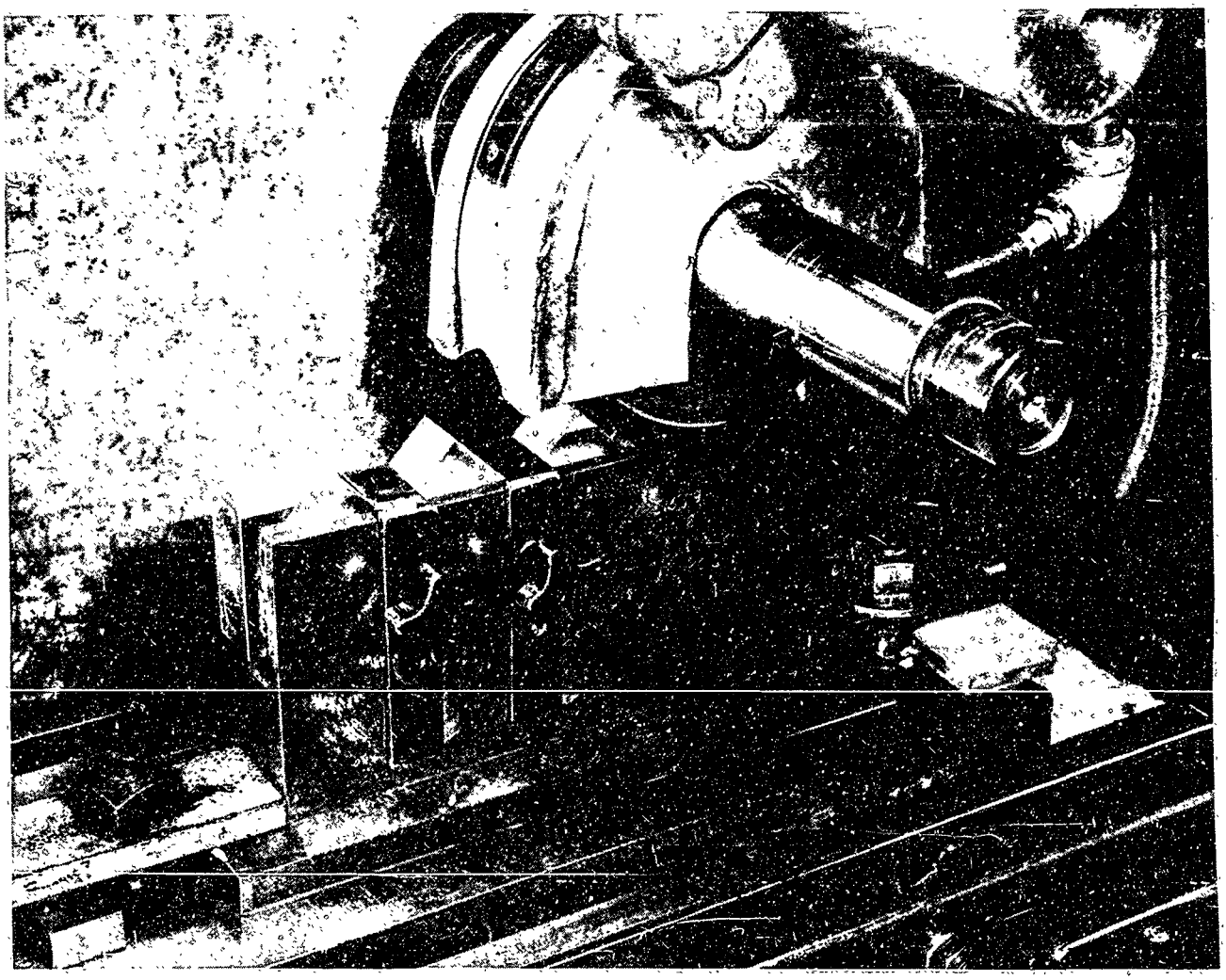

Eastman Kodak Company

Figure 542.—Grinding the Tops and 45° Corners on the Tops of Porro Prism Blanks.

First 90° Face.—Prisms are then mounted in another fixture for grinding the 90° faces as shown in Figure 502. This fixture is designed so that each prism rests on its hypotenuse, with the sides of adjacent prisms contacting each other. There are eight sections of nine prisms each in this fixture.

The work is held by vacuum in specially designed fixtures, 22 x 7 x 1¾ inches, which are bolted to the bed of the machine. Holes are drilled under each prism in the bottom of the fixture, and are used to hold them by means of suction. The clamps at the end of the fixture are used to align the prisms.

Second 90° Face.—The prisms are removed and reversed for grinding the second 90° face.

Top and 45° Corners on the Top.—The machine shown in Figure 542 performs the combined operation of grinding the top and two corners at the same time.

PRODUCTION OF ROOF PRISMS BY VARIOUS MANUFACTURERS

Optical Research Company

Sides and 90° Faces.—Amici roof-prism pressings are mounted in special fixtures, Figure 543, for rough grinding the sides and 90° faces. The fixtures are screwed onto a blocking plate, which is then placed on the magnetic chuck of the surface grinder. The fixtures are turned through 180° for grinding each side and through 90° for grinding each 90° face.

Roof Faces.—After removing, the prisms are mounted in other fixtures as shown in Figure 522, for grinding the roof faces.

Top.—The prisms are then mounted with paraffin in V-blocks for grinding the tops.

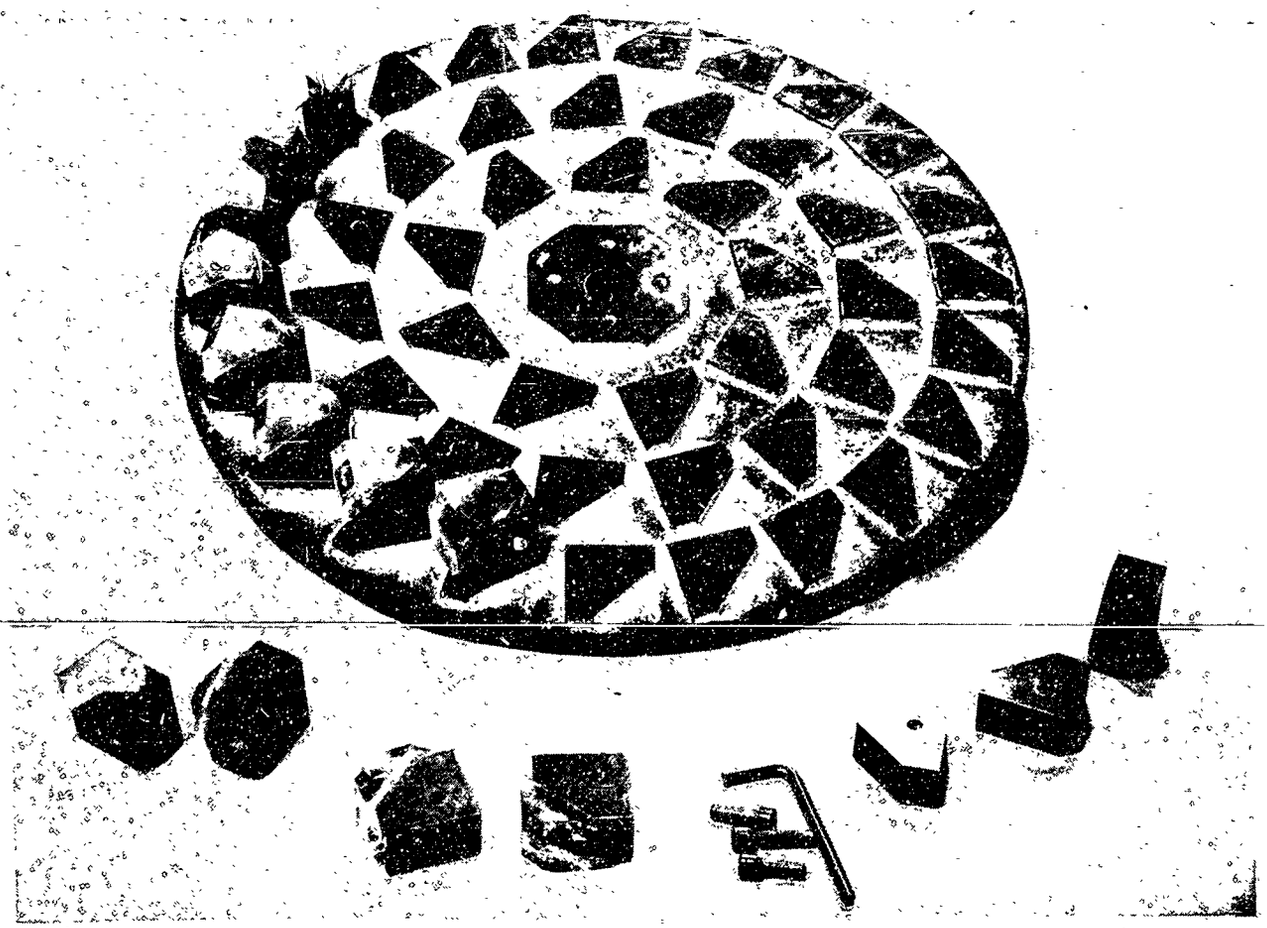

Optical Research, Incorporated

Figure 543.—Amici Prism Fixtures Mounted with Screws on a Blocking Plate for Grinding 90° Faces and Sides on a Surface Grinder.

Naval Gun Factory

Sides. — Four prisms are cemented with beeswax and rosin to a special fixture shown in Figure 544. This fixture is securely clamped to the bed of a converted milling machine. The grinding surfaces of the wheels are completely immersed in a pan of water. There are two 6-inch-diameter resinoid-bonded 80-grit silicon-carbide wheels. They are spaced properly and mounted on the arbor of the grinding machine, and then rotated at 800 rpm. The work is fed in between the wheels at the rate of ½ inch per minute.

Eastman Kodak Company

Konig Roof Prism. — In Figure 545 is shown a special adaption of autocollimation combined with a mechanical setup (bench lathe) and a diamond-charged wheel to grind a konig (norden) roof prism to such a length as to achieve the proper length of light path. The prism is adjusted optically and then ground to proper length.

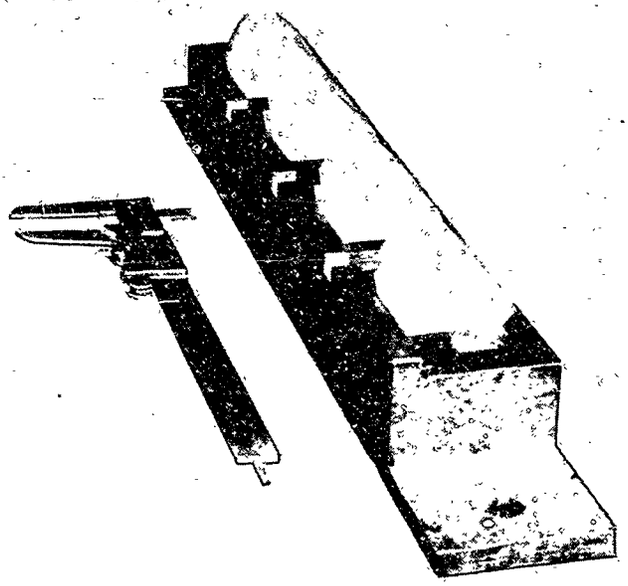

Naval Gun Factory

Figure 544.—Fixture for Grinding Both Sides of Amici Prism Blanks Simultaneously.

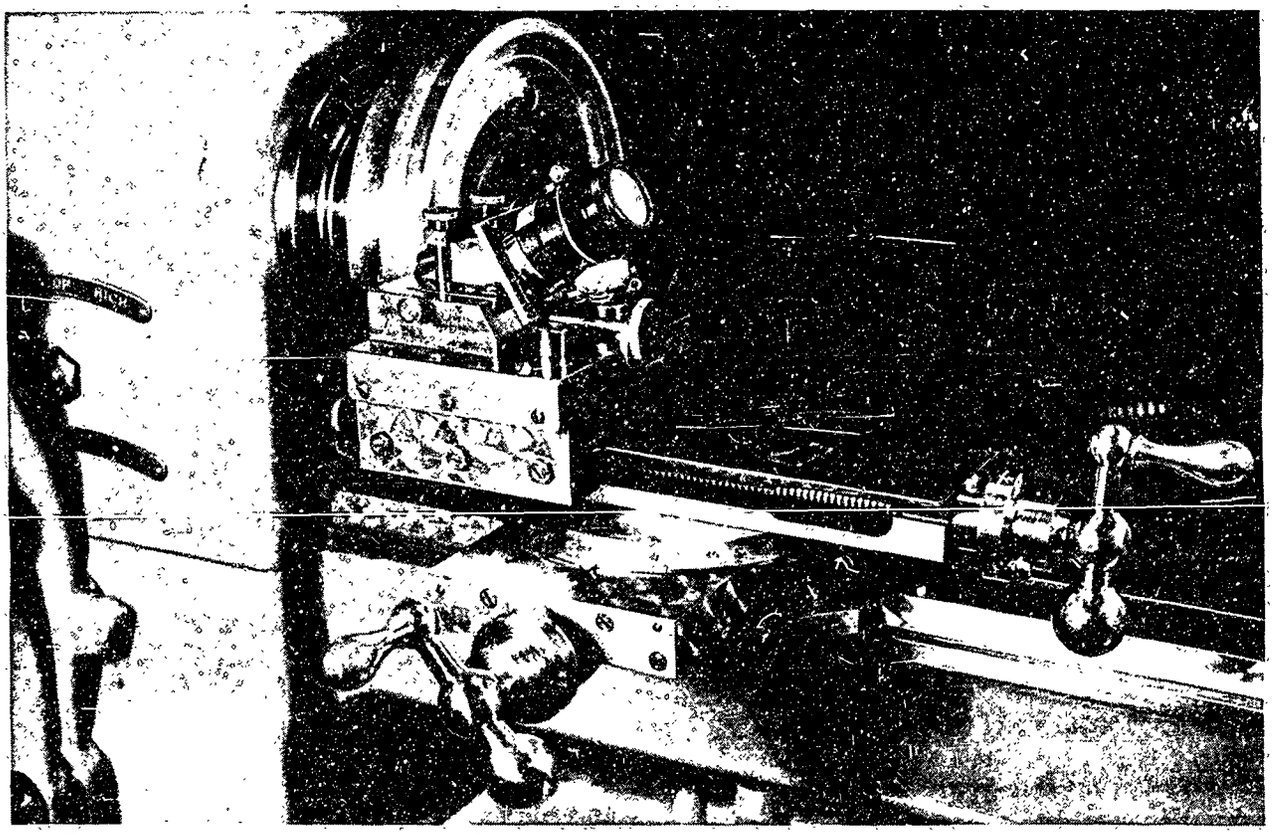

Eastman Kodak Company

Figure 545.—Konig Roof Prism Grinding Machine with Autocollimator.

CHAPTER 6

ROUGH GRINDING GLASS PLATES

	Page No.
Surface Grinding.	603
Using a Mill.	603
Mounting First Side.	603
Grinding First Side.	603
Transferring to Second Side.	603
Grinding Second Side.	603
Removing the Work.	603
Using a Surface Grinding Machine.	604
Optical Flats.	604
First Side.	604
Second Side.	604
Rounding to Diameter.	605
Hand Methods.	605
Stacking the Elements.	605
Preliminary Rounding on a Mill.	608
Steel or Glass Strip Method.	608
Truing the Chuck.	608
Uniting the Stack and Chuck.	608
Truing the Stack.	608
Final Rounding by Motor.	608
Angle Iron Method.	610
Preparation.	610
Final Rounding by Motor.	610
Cleaning the Rounded Elements.	612
Automatic Methods.	612
American Optical Company Machine.	612
Shuron Optical Company Machine.	612
Cylindrical Grinding Machines.	612
Brown and Sharpe Company Machine.	612
Converted Cylindrical Grinder.	612
Shaping Non-circular Plates.	614

	Page No.
Beveling.	614
Hand Method.	614
Automatic Methods.	616
Frankford Arsenal Machine.	616
Vacuum Type Beveling Machine (Frank L. Kaltman Company).	616
Curve Generating Machine.	619
Drilling Holes.	619
Types of Drills.	619
Method.	619

The rough grinding of glass plates consists of three principal operations—surfacing, shaping, and beveling. The surfacing may be done by flat grinding on circular mills as described in Chapter 4, *Rough Grinding Prisms by Hand*, or as discussed in this chapter.

'Shaping' consists of forming the edges of the glass into the desired shape. For circular plates the process is called 'rounding' and may be done entirely by hand on a mill (as decribed in Chapter 7, *Rough Grinding Lenses by Hand*), or, after a preliminary rounding on a mill, may be completed on a motor-driven shaft. This latter method is termed 'hand rounding' also, since the concentricity of the work is controlled by the operator. Rounding completely by hand on mills is done usually in very small shops, where mechanical facilities are limited and when the greatest accuracy in rounding is not needed. When rounding automatically, the machine governs both the concentricity and the diameter of the work. For shaping non-circular plates, various methods are used, such as grinding corners, chamfering, or half-rounding, depending upon the shape specified.

After a discussion of beveling, which can be done either by hand or mechanically, the chapter closes with comments on various methods of drilling glass.

SURFACE GRINDING

Using a Mill

Mounting First Side.—The first step in rough grinding glass plates is to mount the first side. This process is similar to that used in mounting porro prisms (see Chapter 4).

The blocking plate is heated sufficiently to melt the adhesive, the stickum is applied and the glass is mounted on the plate, care being taken to permit four pieces to extend over the edge to serve as 'markers' (see Figure 601). These markers are used to determine and control the progress of the grinding.

Grinding First Side.—The actual grinding is done in the same way that the sides of prisms are ground (see Chapter 4). A table showing the amount of glass to be removed with each abrasive is given in Figure 403.

Transferring to Second Side.—This operation is similar to that described in Chapter 9, Transferring Glass Plates. It should be noted, however, that for rough grinding, a thin layer of stickum is used instead of second side wax and that it is not necessary to load the transfer plate with weights to insure that it will be in very close contact with the glass, or to take more than reasonable care in leveling while it is being heated and waxed.

Grinding Second Side.—When the elements have been transferred, the transfer block is treated as a new work block and the second side is rough ground in the same manner as was the first side until the glass is of the desired thickness.

Removing the Work.—After the rough grinding has been completed, the next step is to remove the work from the block. To do this, the work block is heated gradually until the lower layer of adhesive, that is, the one which is between the block and the paper (see Chapter 9, Transferring Glass Plates), is melted and the paper with its adhering pieces of glass can be slid off. When this has been done, the paper with the glass still attached is placed in a tray of gasoline or other suitable solvent to loosen the work from the paper. Finally, the pieces

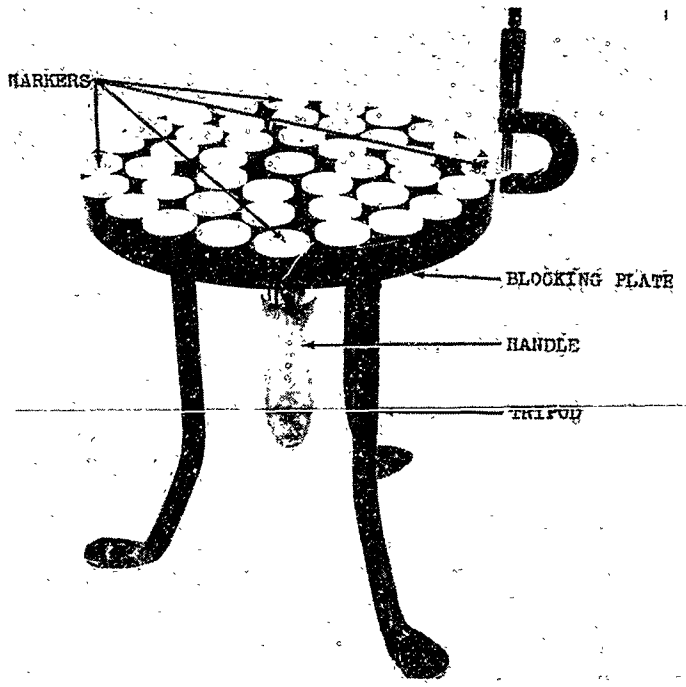

Figure 601.—Reticle Blanks Mounted on a Blocking Plate for Rough Grinding.

thus released are placed in a bath of clean gasoline or processed in a degreaser to remove the last traces of the adhesive.

Using a Surface Grinding Machine

Glass plates may be ground on a surface grinder as shown in Figure 602. This grinding may be rough, smooth, or fine, depending on the grit of the wheel that is used.

By using progressively finer grinding wheels, finishing with 400 grit or finer, it is possible to pass from grinding on an automatic surface grinding machine directly to the polishing operation and thus eliminate any fine grinding with loose abrasive.

In the case of square reticles, the edges may be 'straddle' ground from solid glass as shown in Figure 603 by using two grinding wheels spaced properly on a horizontal-spindle reciprocating-table surface grinder.

Optical Flats. *First Side.*—For grinding the first side of optical flats, pieces are blocked in plaster of paris, in a manner similar to prism blocking as described in Chapter 9. Then the block is ground on a Blanchard type machine using rough, smooth, or fine wheels as the case may require after which it is transferred to a polishing machine, where it is finished to the required flatness. The flats are then removed from the plaster block and each polished surface is tested again for flatness.

Second Side.—The next step is to mount the optical flats for processing the second side, which may be done in the following manner. The polished surfaces are mounted on an optically flat 'pyrex' glass disk of known thickness and parallelism either by hand or by an apparatus similar to that shown in Figure 604. Wax, consisting of a mixture of 80 per cent by weight of 'Optical D' and 20 per cent of beeswax, is heated by a bunsen burner and poured carefully around the flats to hold them in place. Care should be taken that the thickness of this layer of wax is less than the thickness of the finished blank.

A rubber suction cup with a steel base attached, is placed on the under side of the pyrex disk and then the disk is placed on three steel supports which have been arranged on the magnetic chuck of a Blanchard-type grinder.

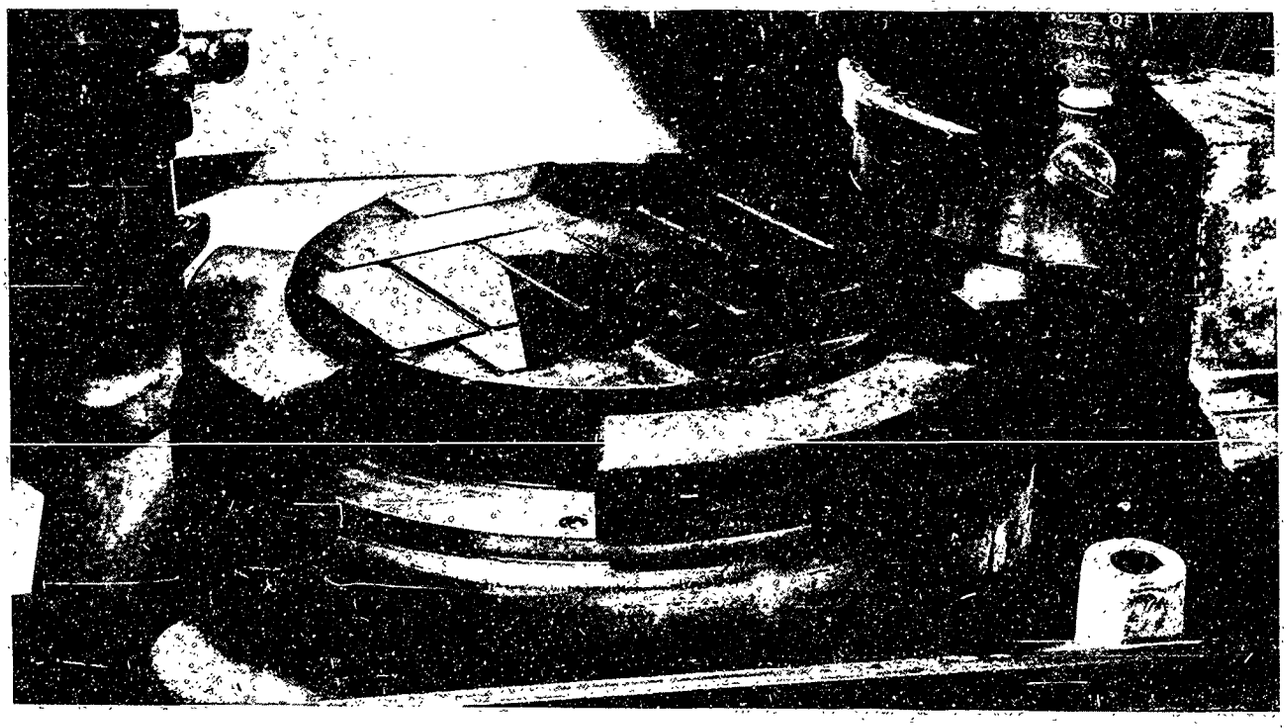

Polaroid Corporation

Figure 602.—Filter Blanks After Grinding on a No. 11 Blanchard Vertical Surface Grinder.

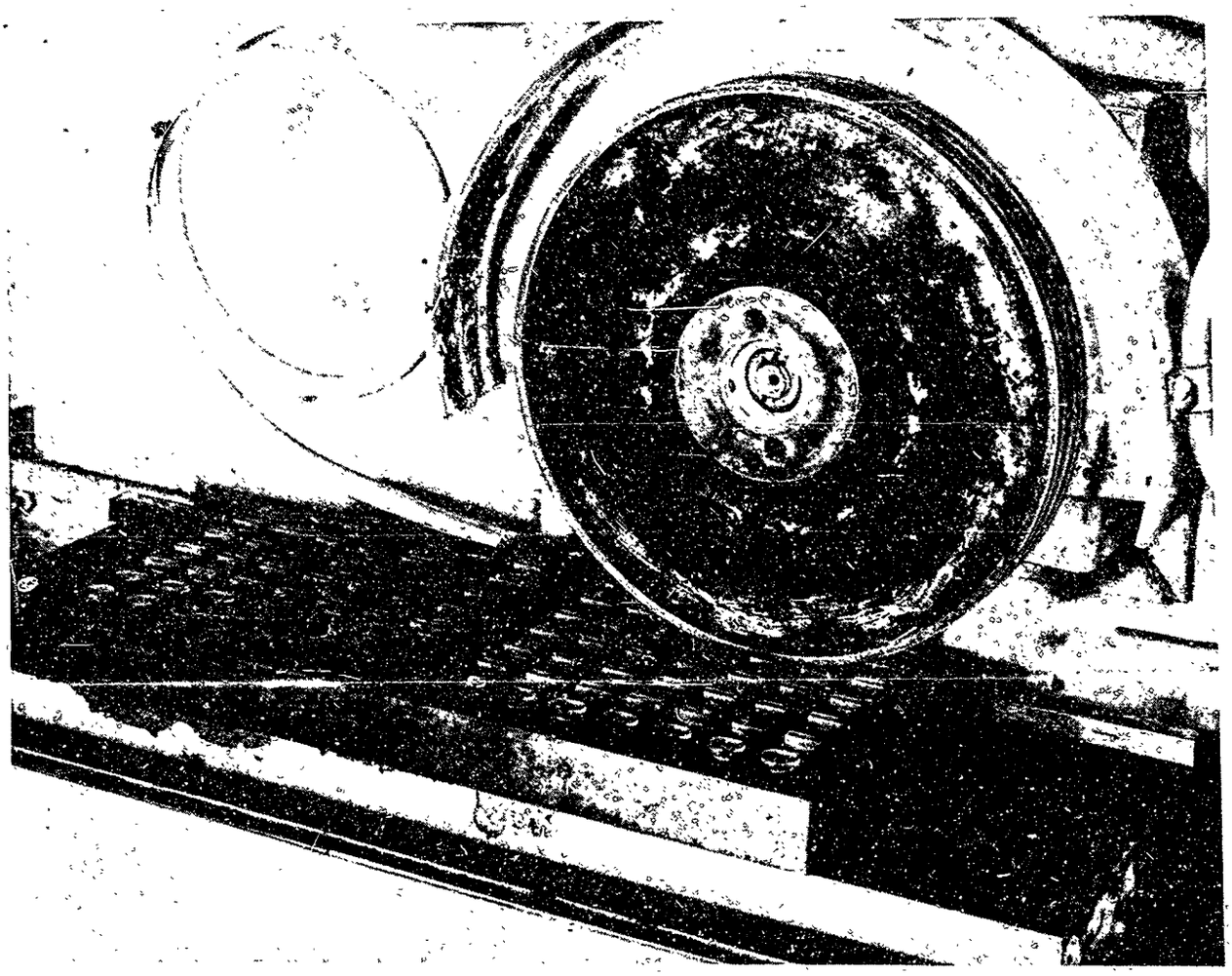

Polaroid Corporation

Figure 603.—Straddle Grinding Reticle Edges.

These supports permit the steel attached to the rubber suction cup to hang just above the face of the magnetic chuck, in such a way, that when the chuck is magnetized the steel attached to the cup is pulled downward, thus holding the pyrex disk firmly in position. Lateral displacement is prevented by side blocking. Figure 605 shows the supports and blocks needed for holding the pyrex disk on a magnetic chuck.

Grinding the second side is done by the method used for the first side except that the thickness must be controlled.

ROUNDING TO DIAMETER

Hand Methods

When elements are processed from 'slab glass' it is usually necessary to make a preliminary rounding on a mill by hand. This is not necessary with blanks whose size is reasonably close to the final diameter.

Elements can be rounded either by hand or mechanically, but the latter method is usually more accurate.

The first operation, when using slab glass, is to cut it into squares as described in Chapter 3, the sides of which are usually about ¼ inch larger than the finished diameter.

Stacking the Elements.—The next step is called 'stacking' because it consists of waxing one element to another until a stack of the desired length is obtained. The length of the stack varies with its diameter and the method used for rounding, as shown in Figure 606.

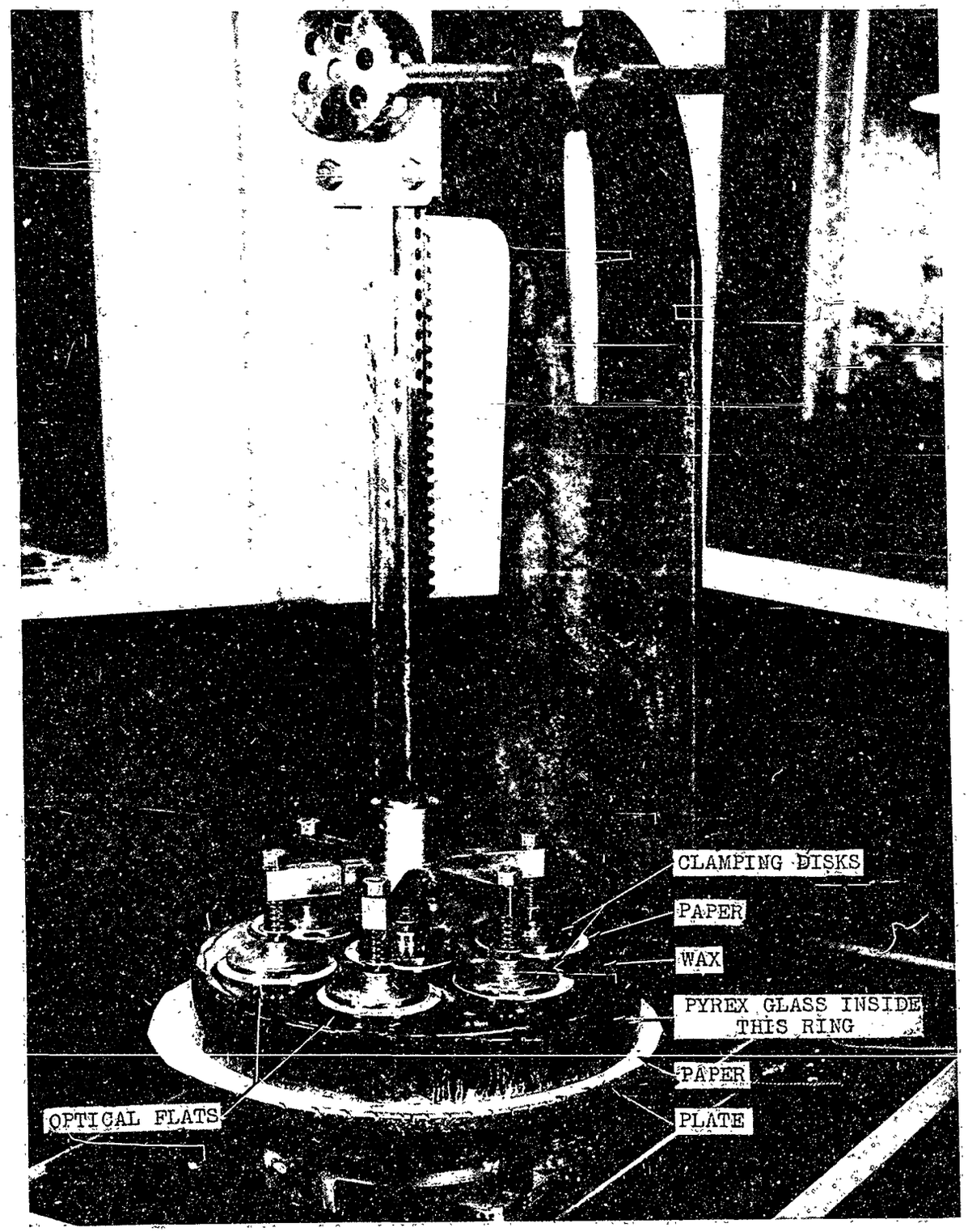

Polaroid Corporation

Figure 604.—Mounting Optical Flats for Grinding and Polishing Second Side.

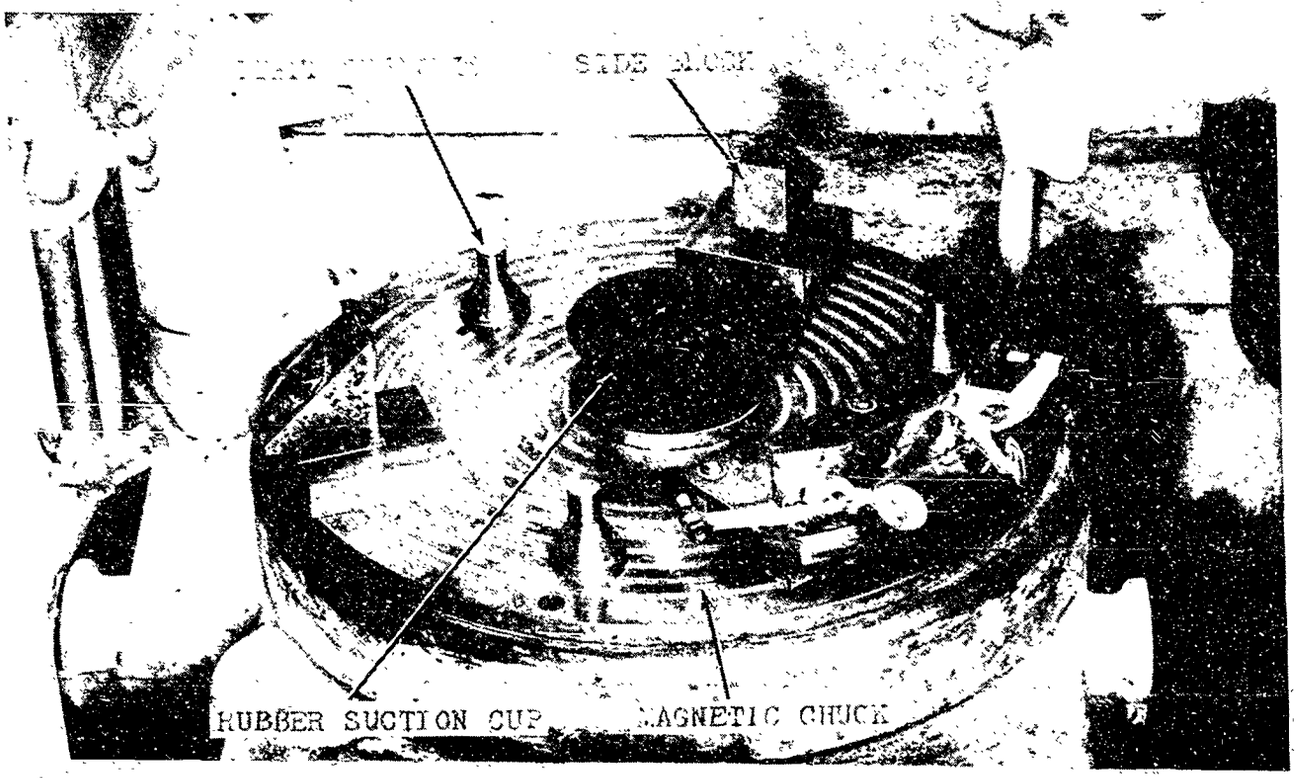

Polaroid Corporation

Figure 605.—Fixtures for Holding Pyrex Disk While Grinding Second Side of Optical Flats.

TABLE OF APPROXIMATE STACK LENGTHS FOR VARIOUS METHODS OF ROUNDING

DIAMETER OF STACK	METHOD OF ROUNDING				
	BY HAND			MECHANICALLY	
	on a mill	on a motor		on a cylindrical grinder	on an edging machine
		with a strip	with angle irons		
	inches	*inches*	*inches*	*inches*	
⅛" — ½"	2 — 4	¼ — 1¼	not applicable	not applicable	Depends on how much the chucks can be opened
½" — 1½"	4 — 6	1¼ — 3	3 — 7	6	
1½" — 2½"	6	3 — 1½	7 — 9	6 — 9	
2½" — 6"	6 — 2	1½	not applicable	6 — 9	

Note that when rounding by hand on a mill or with a strip, the length of the stack is reduced for the larger diameters (in order to facilitate handling).

Figure 606.

To assemble the stack, the pieces of glass are placed on a metal table and heated sufficiently to melt the adhesive that is to be used. Adhesive is then placed on one surface of each piece, except that piece which will be at one end of the stack. Black sealing wax is used for an adhesive if the diameter of the elements is less than ¾ inch and stickum when they exceed this size. A warmed right-angle prism is placed in one end of a V-block, to serve as a stop for the first piece in the stack. Then, the square pieces are lifted singly with tongs and placed in the block, one against the other, in much the same manner as was used in making the stacks of prisms as described in Chapter 4, Stacking. The pieces should be pressed down firmly into the V-block and another right-angle prism placed against the last piece of the stack. Neither prism is waxed to the stack. This last prism is pressed towards the stack to insure that each piece of glass is perpendicular to the channel faces of the V-block and to squeeze out any excess adhesive, and the stack is allowed to cool. When it has cooled enough to harden the adhesive, the prisms are removed and the stack is now ready for rounding.

Preliminary Rounding on a Mill.—When the stack has been made, the corners are rounded on a mill by hand, and the diameter reduced until it is about 0.100 inch greater than the finished size. To guide the operator in obtaining the proper diameter when hand rounding, a circle of the proper diameter can be drawn on each end of the stack, or a stock of the proper diameter can be fastened to each end. A more complete discussion of hand rounding is included in Chapter 7, *Rough Grinding Lenses by Hand.*

Steel or Glass Strip Method. *Truing the Chuck.* — When the preliminary rounding on the mills has been completed, the stack is ready for final rounding to the finished diameter.

In this operation, a chuck having a diameter equal to or slightly less than the finished diameter is fitted to the shaft, extended if necessary, of a small bench lathe and tested to insure that the face of the chuck rotates in a plane perpendicular to the horizontal axis of the shaft. This can be done by starting the lathe and moving a pencil which is held firmly on the tool rest, slowly towards the face of the chuck until it makes contact. If the face of the chuck is true, the pencil will make a complete circle on it. It is advisable to make several tests with circles of different diameters. If the pencil makes a series of arcs on one side of the chuck face instead of complete concentric circles, either the chuck has not been fitted properly due to dirt, burrs or deformed threads, or the end of the chuck has not been machined so that it is perpendicular to the axis of rotation. When the trouble has been corrected, either by adjusting the chuck or by substituting one that has been machined properly, it should be retested. The face of the chuck should be slightly concave, since any roughness or convexity may make it difficult to mount the stack properly on the chuck.

Uniting the Stack and Chuck.—When the chuck is ready to receive the stack, it is placed on a metal table with the face upwards. Next, the chuck is heated sufficiently to melt adhesive which is then applied to the chuck face. Then the stack, which has been warmed, is placed on the chuck, pressed down firmly and evenly, and centered visually as accurately as possible.

Truing the Stack. — After the chuck and stack have cooled, the assembly is mounted on the lathe, care being taken that the threads are clean and free from burrs, etc. The outer face of the stack is now checked in the same manner as the chuck face. If complete circles are obtained which are not equidistant from the edges of the stack, it is evident that the stack has not been centered properly on the chuck. In this case, the chuck and stack should be removed, the chuck reheated and the stack recentered. If, on the other hand, incomplete circles or arcs are obtained, the elements may not be parallel to each other in the stack, the chuck and stack may not be united properly, or the chuck itself may not be mounted on the lathe properly and hence the geometrical axis of the stack is not in line with the axis of rotation of the motor shaft. When these faults occur, the chuck assembly should be removed and the proper corrections made.

Final Rounding by Motor.—When the chuck and the stack have been mounted properly on the lathe, actual rounding can be started. This

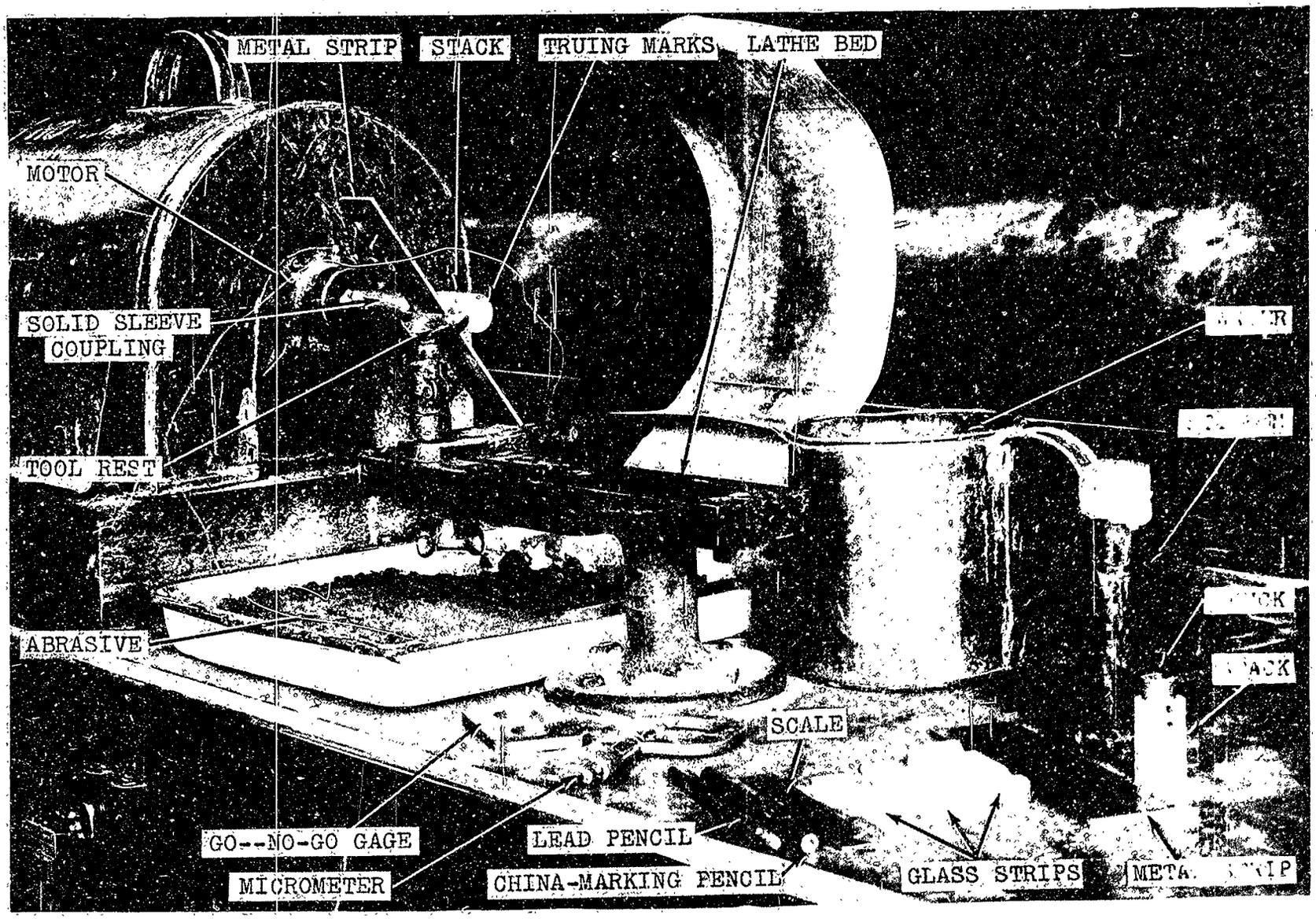

Figure 607.—Rounding a Stack of Reticle Blanks on a Chuck with a Steel Strip.

operation is shown quite clearly in Figure 607. A tray containing the proper abrasive mixture is placed under the lathe bed, the face of the tool rest is clamped firmly in a position that is parallel to and level with the axis of rotation, and about ¼ inch from the surface of the stack. A flat metal strip is placed between the tool rest and the surface of the stack, as shown in Figure 607, and the motor started. The rounding is done by pressing the strip lightly against the stack with one hand while the other is used to drop abrasive between the strip and the rotating work. The length of the stack should not exceed the width of the strip.

A micrometer is used to check the diameter and also to guard against any tapering effect which would occur if the tool rest is not parallel to the axis of rotation.

In grinding the stack down to the desired diameter, progressively finer abrasive grits are used. When necessary #70 abrasive is used to grind the stack until the amount of diameter still to be removed is 0.190 inch. This amount is the sum of the allowances for the finer rough grinding abrasives that follow. As shown in Figure 608, the decreases in diameter allowed for succeeding grits are 0.100 inch for #150, 0.060 inch for #220, 0.020 inch for FF and 0.010 inch for FFF.

During the grinding operation, a slight bowing of the stack may occur, which is corrected when grinding with the finer abrasives,

TABLE OF LOOSE ABRASIVES USED FOR ROUNDING

ABRASIVE	DIAMETER REMOVED BY EACH ABRASIVE *inches*	DIAMETER REMAINING FOR SUBSEQUENT REMOVAL *inches*
#70 grit	excess diameter (over 0.190)	0.190
#150 grit	0.100	0.090
#220 grit	0.060	0.030
FF	0.020	0.010
FFF	0.010	0.000

For particle size and designation of rough-grinding abrasives for flat surfaces, refer to Figure 403.

Figure 608.

or by moving a flat glass strip about 1-inch wide back and forth with a light filing motion across the top of the stack.

Angle Iron Method. *Preparation.*—It will be noticed that in the method of grinding or rounding the stack that has just been described, the abrasive contacts the stack on a single line. Another method has been developed, in which there are four lines of contact, and which shortens the time required to perform this grinding operation considerably. This alternate method, described in the following paragraphs, may be used when the elements are between ½ inch and 2½ inches in diameter, the top limit being the largest size that the operator can grip while exerting the required pressure.

The stack is prepared in the same manner and the bench lathe is used but the tool rest is removed. Instead of screwing the chuck to the lathe shaft solidly it is connected to the shaft through a flexible coupling, a drawing of which is shown in Figure 609. In the figure the lathe shaft is shown at the extreme right and the stack and chuck are shown at the extreme left. The flexible coupling consists of a convex and concave portion, B and B′, which touch each other lightly on the curved surfaces at C, and are held together by a rubber hose D, into which they are cemented firmly. The left hand or concave half of the coupling G, has an external thread to receive the chuck H, and the right hand or convex half is connected to the lathe shaft by means of a solid sleeve coupling E, having two setscrews F.

In this method, it is not necessary to mount the stack exactly in the center of the chuck, neither is it necessary that the face of the chuck be trued so exactly.

Final rounding by motor.—Instead of using a flat strip of metal or glass as described previously, two pieces of angle iron are used which are about 2 inches shorter than the stack, as shown in Figure 610. The sides of the irons should be of such size that the stack is not enclosed by them entirely. One hand is used to hold the angle irons around the stack and to move them back and forth during the grinding

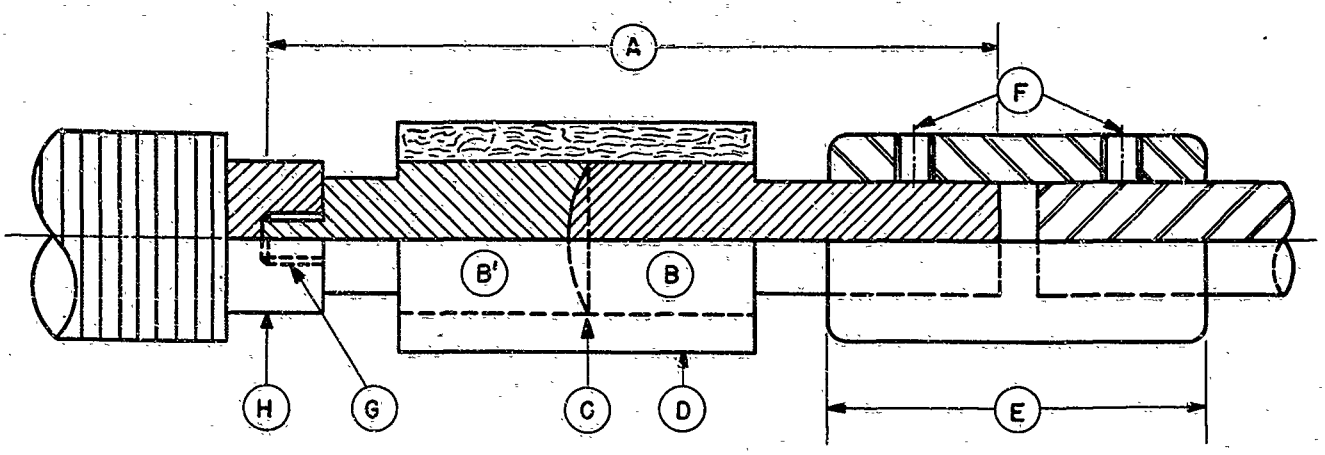

Figure 609.—Flexible Coupling for Rounding with Angle Irons.

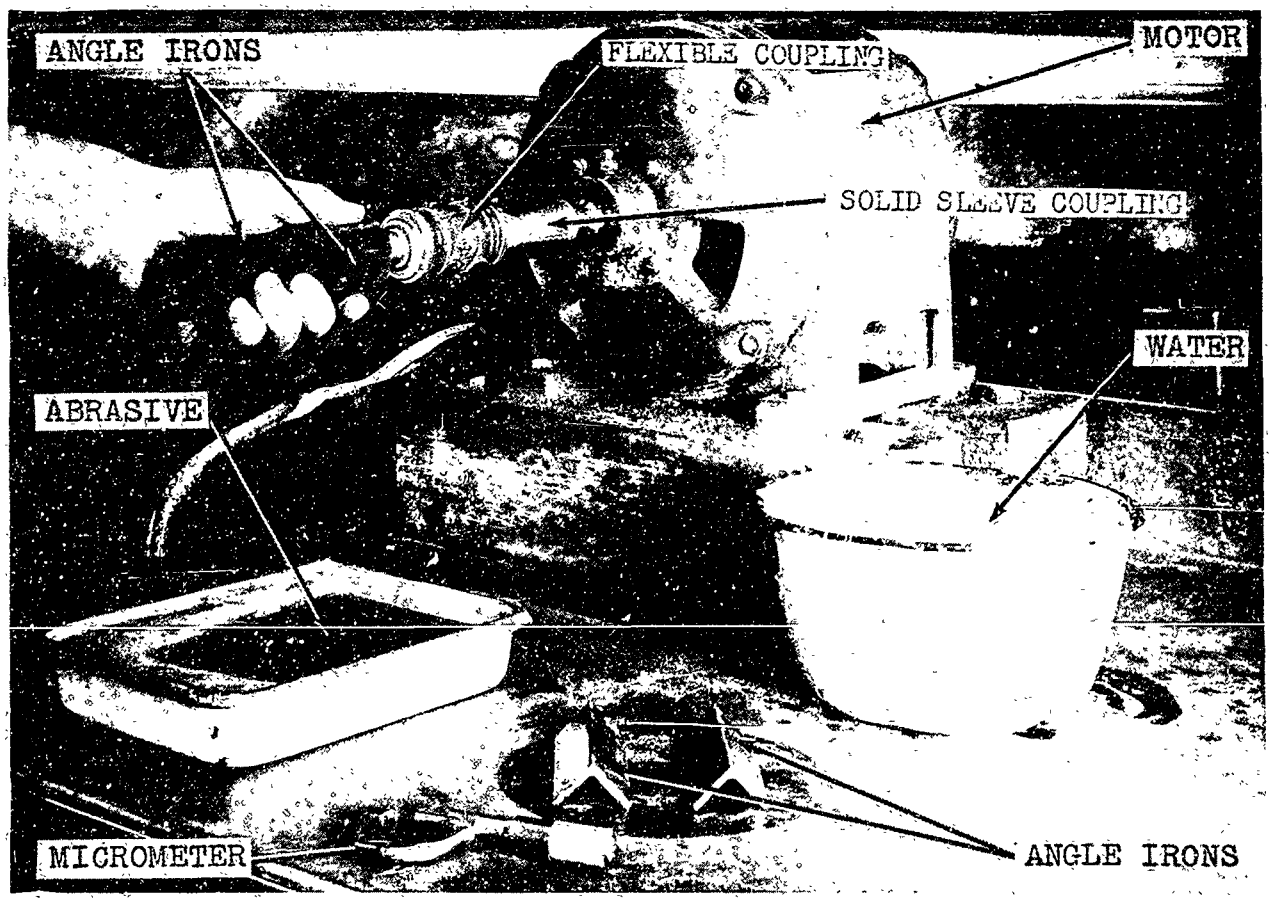

Figure 610.—Rounding a Stack of Reticle Blanks on a Chuck with Angle Irons.

operation. The other hand is used to feed the abrasive to the stack through the opening between the angle irons.

Cleaning the Rounded Elements. — After the stack has been rounded to the correct diameter the elements are heated, then separated, and allowed to cool. Next they are soaked in gasoline or other suitable solvent and wiped dry with cheesecloth, or a trichlorethylene vapor degreaser may be used to advantage as described in Chapter 23, *Cleaning Optical Elements.*

Automatic Methods

Elements can be rounded, not only by hand as has been described in the preceding paragraphs, but also mechanically, or, as it is sometimes called, automatically. All machines that are used for rounding optical elements automatically are similar in operation and the particular mechanical features of a few of them are described below.

American Optical Company Machine. — When using this machine, it is not necessary to wax the elements together. Instead, a stack, which may not be more than 1¾ inches long, is mounted between two chucks, one of which is stationary and one movable. The movable chuck clamps the stack with sufficient pressure obtained from a spring to hold the elements in place. The coolant seeps in around the edges of the elements and aids in maintaining adhesion between them. The diameter of the elements may vary from ¾ inch to 1½ inches.

The rounding is done by a grinding wheel against which the stack is pressed as it rotates. This pressure is controlled by an adjustable chain and coil spring assembly which is connected to the carriage, while the diameter that is desired is controlled by a calibrated hand wheel which operates on the micrometer principle. A stationary metal guide working against a circular metal template, which rotates with the chucks, controls the shape of the work. The grinding wheel oscillates across the work so that the necessity of frequent wheel dressing is reduced to a minimum.

Since two separate sets of chucks are mounted on the machine, two stacks may be ground simultaneously.

Shuron Optical Company Machine.—The specific differences between this machine (Figure 611) and the American Optical Company machine can be summarized as follows:

1. The pressure that is exerted to hold the work in place in the chucks is applied by a lever and cam arrangement instead of by a spring.
2. The work is fed against the grinding wheel with a system of levers and weights instead of by a chain and spring assembly.
3. Uneven wear on the wheel is controlled by oscillating the work carriage instead of the grinding wheel.

Cylindrical Grinding Machines. *Brown and Sharpe Company Machine.*—This is known as a cylindrical type of grinding machine and is arranged to permit adjusting the infeed of the grinding wheel and the amount and rate of oscillation of the table. With this machine, the elements are waxed together in a stack and a stock or chuck, with a countersunk center, is centered visually and attached to each end of it. After the stack has been prepared in this manner, it is mounted between the two machine centers and is rotated by a 'dog' connected to one of the stocks or chucks.

This machine grinds the stock concentrically with the horizontal axis of rotation.

Converted Cylindrical Grinder.—A non-vibrating cylindrical grinder having a tailstock spring which can exert considerable pressure can be converted for rounding glass. Headstock and tailstock end plates are made by mounting sealed ball-bearings on the centers, which have been turned down to the proper size, and then placing brass caps over the bearings, as shown in Figure 612.

The stack, the length of which should not be more than three times its diameter, is mounted in a loading device consisting of a simple V-block with adjustable ends. When thus prepared, it is placed between the end plates on the headstock and tailstock so that the center line of the glass passes through the centers of these end plates. When the glass has been lined up properly, the tailstock spring is released, thus clamping the work, the loading device is removed, and the work is ready for grinding.

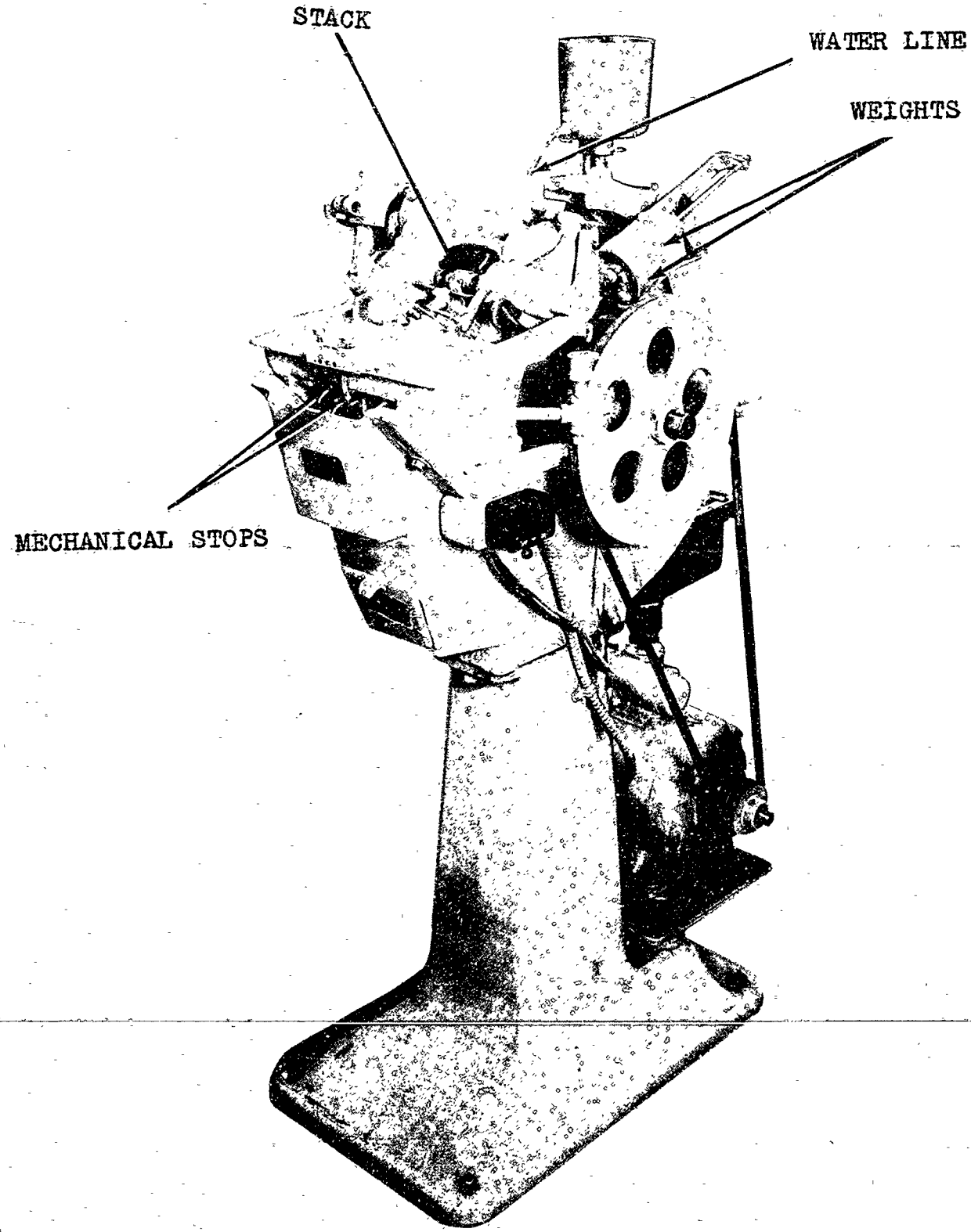

Figure 611.—Rounding a Stack of Reticle Blanks on an American Optical Company Ophthalmic Edging Machine.

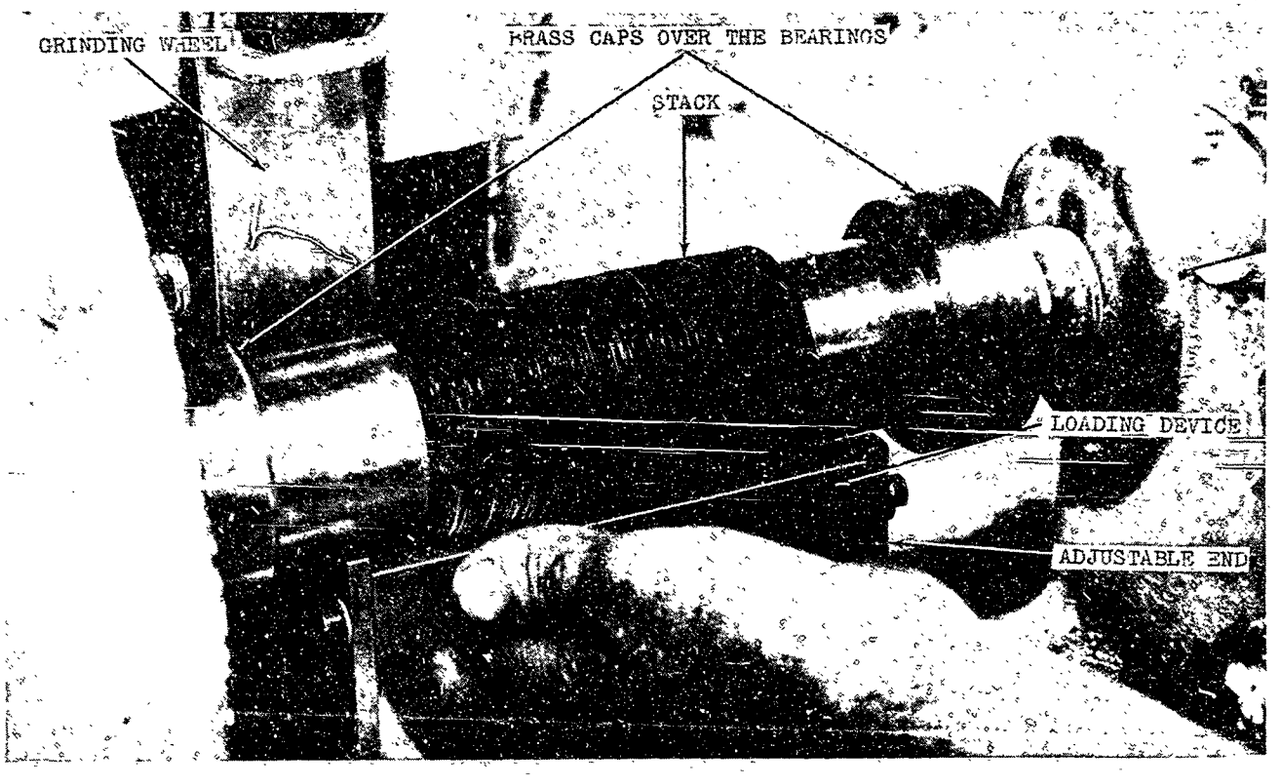

Polaroid Corporation

Figure 612.—Rounding a Stack of Glass Plates on a Converted Cylindrical Grinder.

A sharp diamond wheel should be used for grinding in order to prevent bowing the middle of the stack. After the stack has been ground to the desired diameter, three additional oscillations should correct any bowing or other deformity that may remain.

SHAPING NON-CIRCULAR PLATES

The methods used for processing non-circular plates depend on their final form. After the glass has been cut to a size which will include a piece of the required shape, the two surfaces are ground flat and parallel to each other and the piece is ready to have the edges finished. If it is to be square or rectangular and the edges are to be perpendicular to the surface, a number of them are stacked and two adjacent sides of the stack, formed by the edges of the pieces, are ground by hand so that they are perpendicular to each other and also to the end surface of the stack. Then the stacks are mounted on a blocking plate and the opposite sides are ground parallel to those first ground.

Plates having rounded ends can be cut with a circle cutter and then ground to the proper shape, either singly, or in stacks, using metal stocks as guides. A chamfer on plates having straight or rounded edges can be ground in the same manner, provided the pieces in the stack are canted at the proper angle.

If corners are to be chamfered or rounded, the work can be done on a small mill singly or in a stack held either in the hands or in an angle plate, using metal stocks if necessary. However, when the glass plates are large, chamfering and rounding are always done singly using metal guides if desired.

BEVELING

Windows, filters, and reticles are usually given a 45°-angle bevel either by hand or by machine, each side being done individually. These two methods are discussed separately.

Hand Method

A hand beveling tool has a concave surface which should have a radius of 0.707 times the

finished diameter of the element, while the diameter of the tool itself must be somewhat larger than this diameter. From this it will be seen, that a different beveling tool will be required for any appreciable variation in the diameter of the work that is to be beveled.

Before beveling an element, the tool is mounted on a vertical spindle, rotated at about 400 rpm and the proper abrasive applied. If the bevel is not over 0.016 inch, FFF abrasive is used, while if it is more, FF abrasive gives better results, although it may be necessary to finish with FFF abrasive.

Usually pieces ¾ inch in diameter can be held in the fingers. The fore and middle fingers of one hand (see Figure 613) are used to pass the element across the concave surface of the rotating tool while the thumb is used to help place and remove the piece. After three or four passes, the element is removed from the beveling tool, given a quarter of a turn, and passed across the tool again for the same number of times. This process of grinding and turning is repeated until the bevel is ground to the desired size, the frequent turning being necessary to secure a uniform bevel.

A hand method of beveling in which the element is rotated almost constantly by the fingers is discussed in Chapter 7, *Rough Grinding Lenses by Hand.*

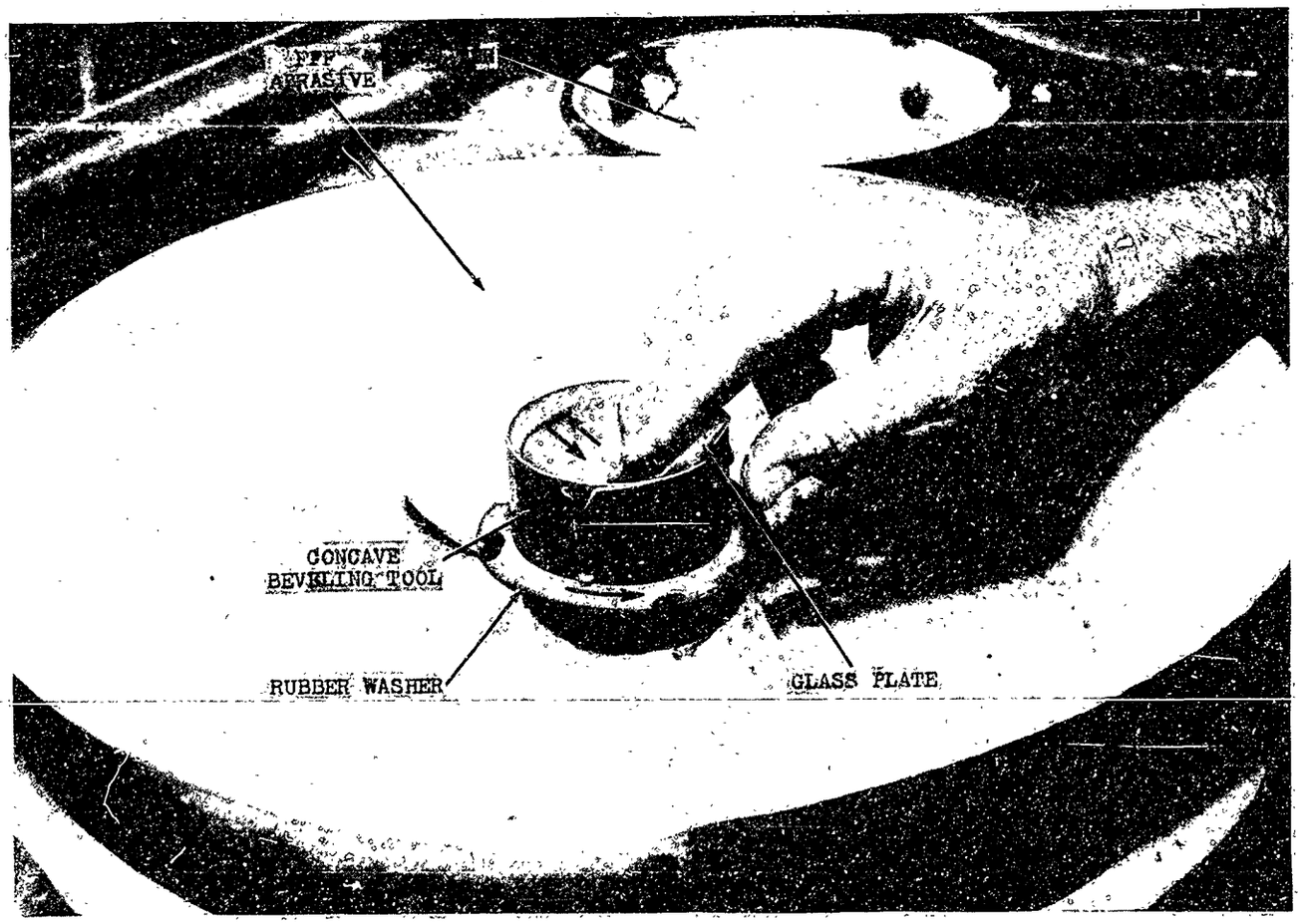

Figure 613.—Position of Fingers for Beveling a Circular Glass Plate by Hand.

If the glass is too small to hold in the fingers, *i.e.*, if it is less than ¾ inch in diameter, it may be held by a rubber suction cup attached to the end of a short stick. When held in this manner, the stick should be rotated constantly with the fingers to insure an even beveling.

Automatic Methods

Frankford Arsenal Machine.—When a machine such as is shown in Figure 614, is used for beveling, the work is placed in a collet chuck which is set so that it makes an angle of 45° with the face of the grinding wheel. As the chuck revolves, the wheel is brought into contact with the edge of the glass and thus grinds the bevel. The width of the bevel is controlled by an adjustable stop which limits the travel of the grinding wheel towards the work.

The grinding wheel (either carborundum or diamond-impregnated) is usually from 6 to 8 inches in diameter. The peripheral speed for the diamond-impregnated wheel is about 4000 surface feet per minute, while the proper speed for the carborundum wheel must be determined by trial.

The peripheral speed of the rotating work to be beveled should be about 540 surface feet per minute, that is, a piece which is 1 inch in diameter should be rotated at about 1700 rpm. Ordinarily water is used as a coolant.

Vacuum Type Beveling Machine (Frank L. Kaltman Company).—A beveling machine has been developed in which the circular element to

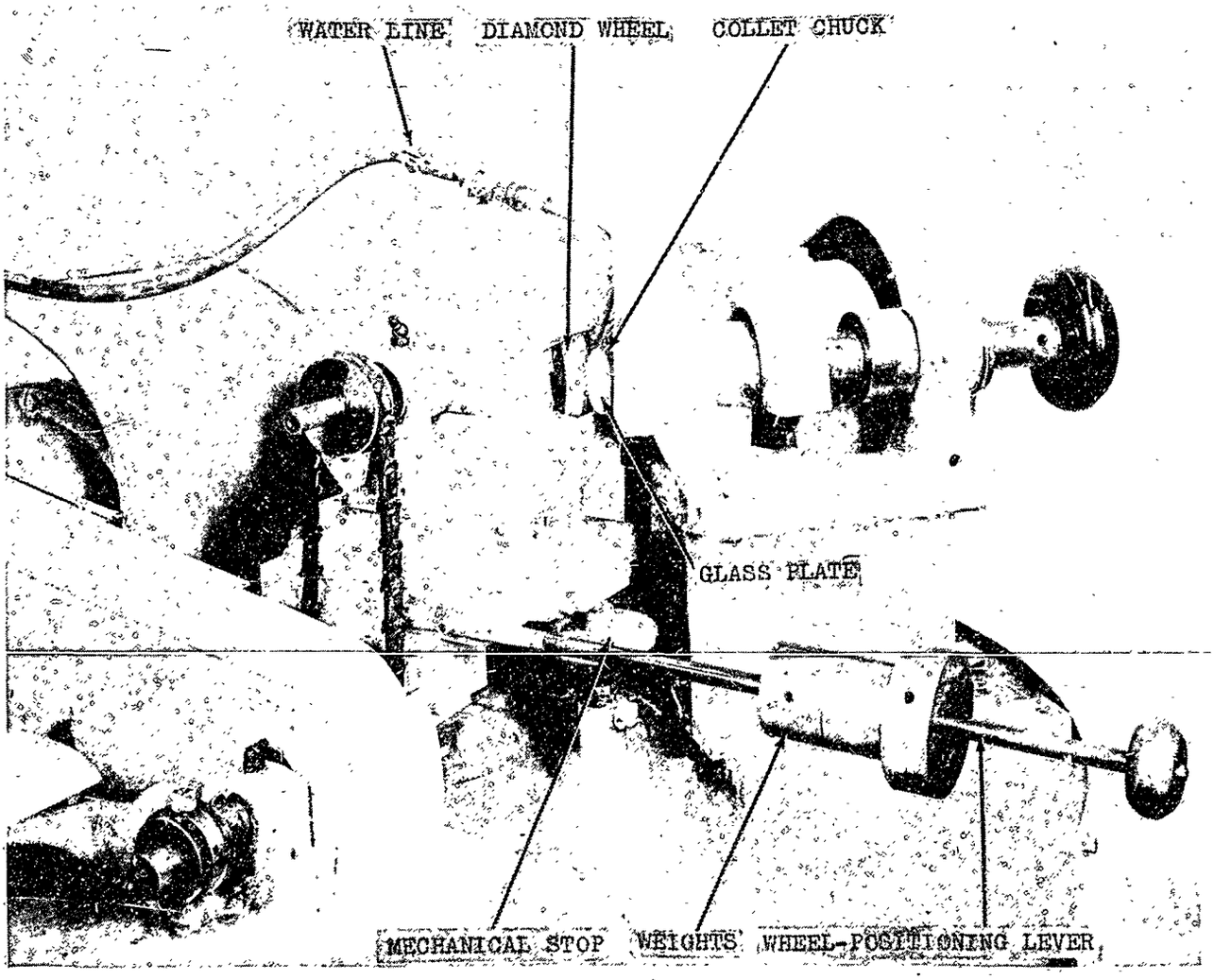

Figure 614.—Beveling Machine.

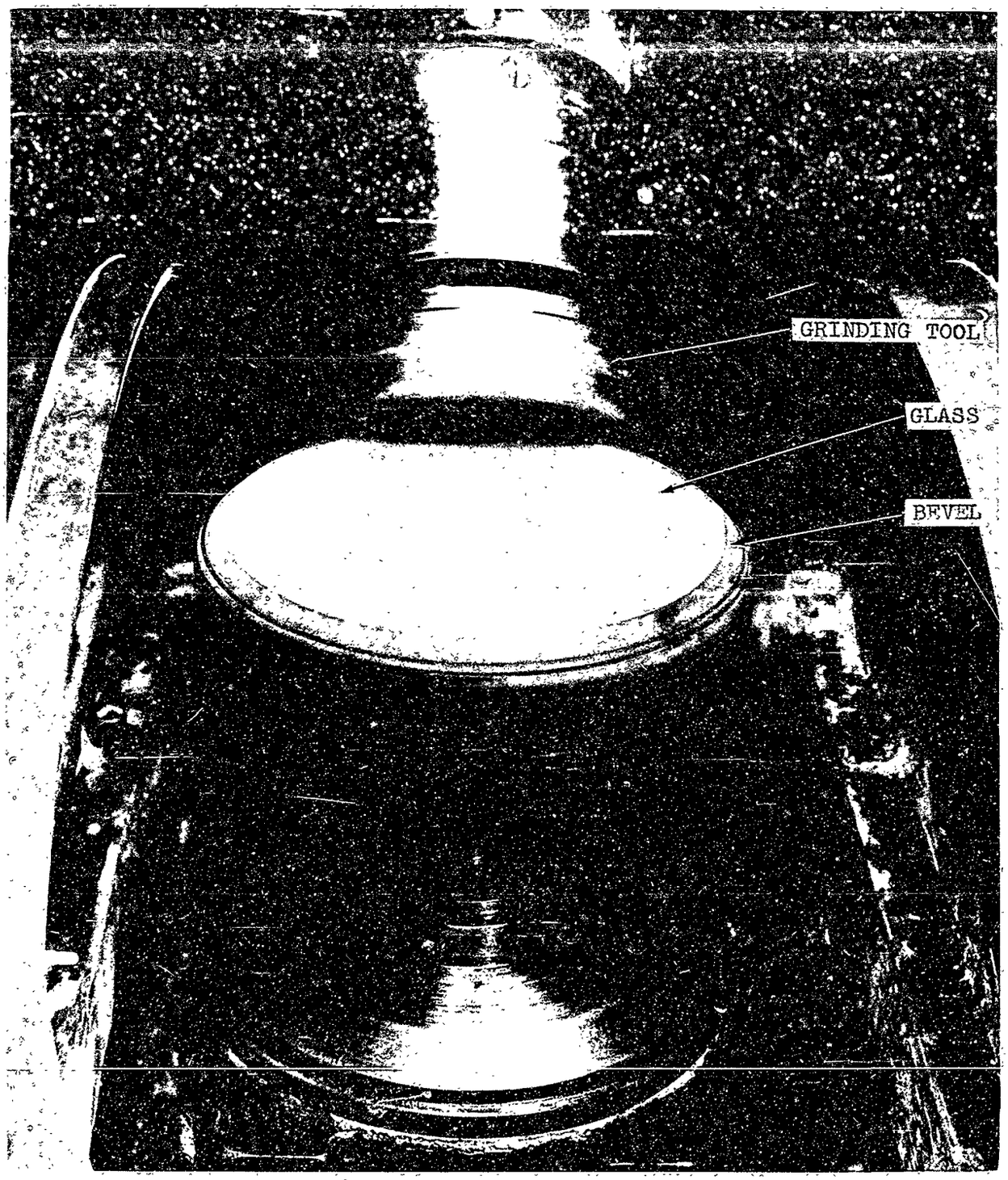

Polaroid Corporation

Figure 615.—Beveling with a Curve Generator.

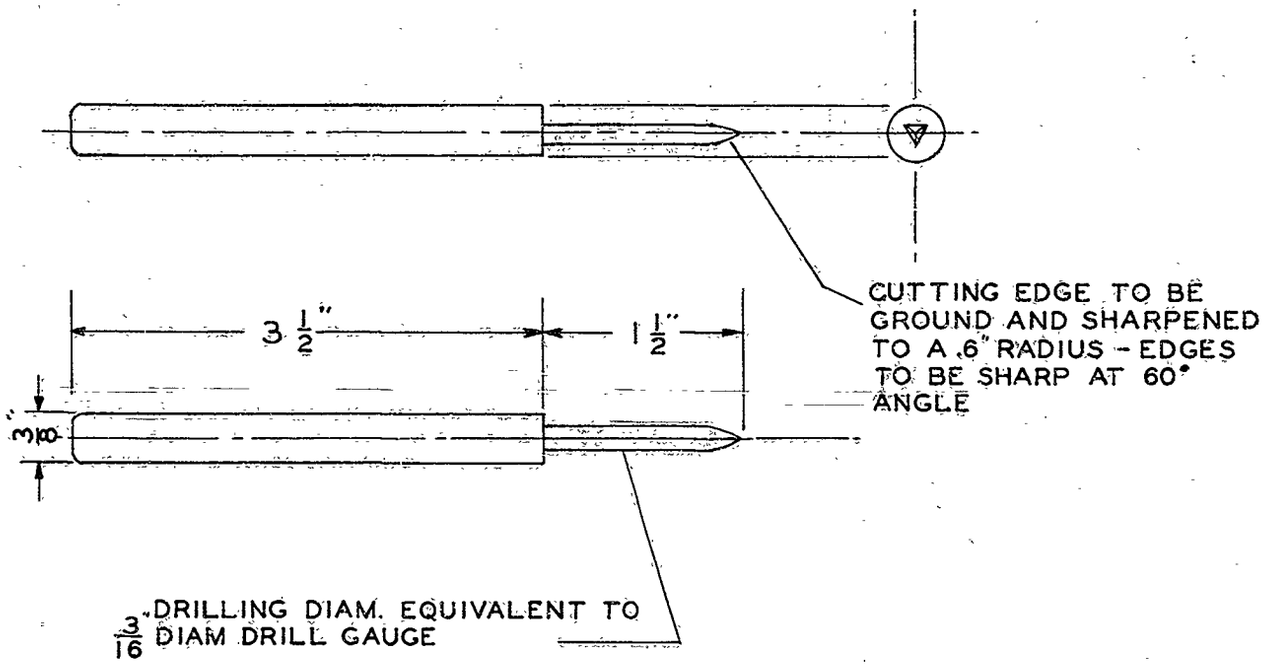

Figure 616.—Firthite Drill.

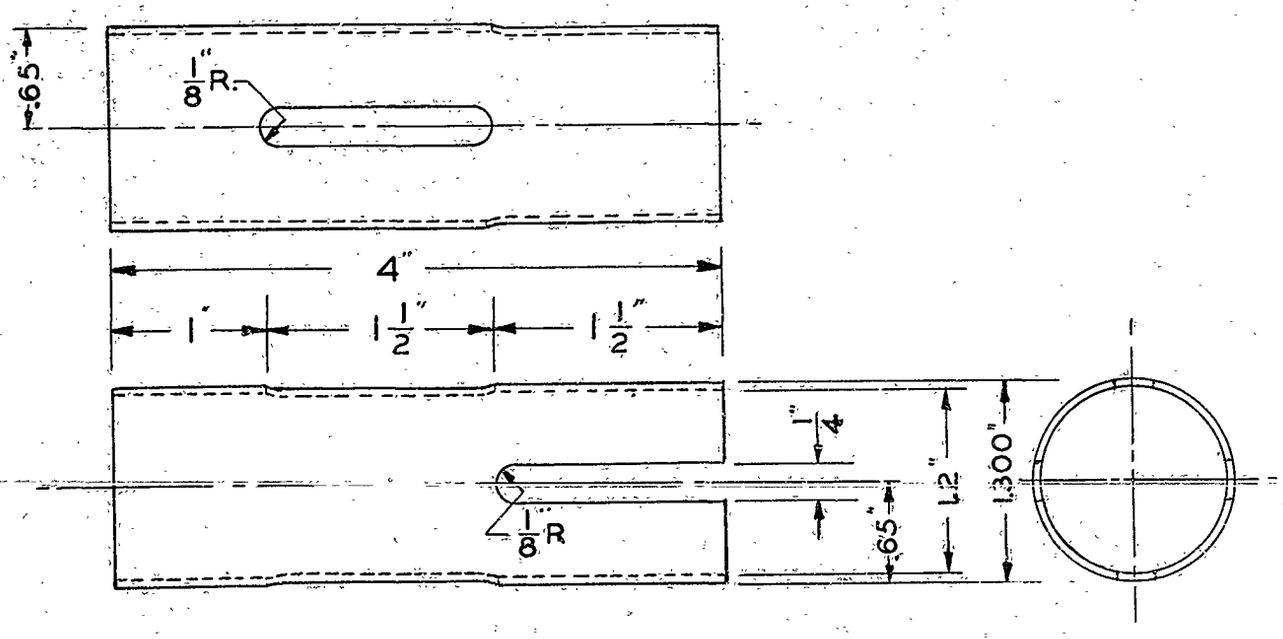

Figure 617.—Core Drill.

be beveled is held in place by suction. This is accomplished by using a hollow spindle for holding the chuck on which the work is mounted. A vacuum line is connected to the outer end of this spindle by means of a swivel joint and the chuck is drilled through its axis to bring the vacuum line up to the glass itself. When a flat surface is to be placed against the chuck, as in the case of a round piece with two plano surfaces, the chuck is faced off perpendicular to the axis of rotation.

If a curved surface is to be placed against the chuck a surface similar to that used for centering or with a complementary radius is turned on the face of the chuck. In order to provide an air tight contact between the face of the chuck and the glass, the surface of the chuck is covered with a thin layer of rubber or its equivalent. This insures a vacuum strong enough to hold the piece in place on the chuck during the grinding operation.

The unit holding the glass is set at such an angle that the desired bevel will be obtained when the rotating work is brought into contact slowly with the grinding wheel.

Curve Generating Machine. — Excellent bevels on circular pieces of glass may be produced with a curve generating machine (Figure 615), by following the methods of operation of this machine described in Chapter 8, *Rough Grinding Lenses with Automatic Machinery*. The only special precautions that must be taken are to make certain that the work does not move laterally during the grinding operation, and that the recess into which the glass fits is concentric with the vertical axis of the machine.

DRILLING HOLES

A hole or, in some cases, a number of holes, must be ground into certain elements.

Types of Drills. — The holes may be cut with any of the following types of specially designed drills.

1. Firthite drill (Figure 616).
2. Diamond drill.
3. Diamond-impregnated core drill.
4. Core drill with an abrasive mixture (Figure 617).

Methods.—For cutting holes under ¼ inch in diameter, a triangular Firthite drill, an example of which is shown in Figure 616, or one of the diamond drills is used. The drill is submerged in a coolant while grinding, the coolant used for the Firthite drill being one part lard oil and three parts turpentine, and for the diamond tools any ordinary water-soluble oil.

For drilling larger holes, a core drill similar to that shown in Figure 617, is used. It consists of a piece of brass tubing about 4 inches in length and with ¼ inch by 1½ inch fluting. The side is cut out so that #220 abrasive can be fed into the tube while it is rotating. Because this drill grinds with a loose abrasive, allowance must be made for the fact that the hole will be somewhat larger than the drill.

The drill is held in a drill press which is adjusted to its lowest speed and the drill is brought down gently into contact with the glass. Very light pressure is applied in order to prevent chipping around the edges of the hole.

CHAPTER 7

ROUGH GRINDING LENSES BY HAND

	Page No.
Slab Glass Procedure.	703
Forming Disks.	703
Determining the Thickness.	703
Double-convex Lenses.	703
Double-concave Lenses.	703
Concave-convex Lenses.	703
Plano-convex Lenses.	703
Plano-concave Lenses.	703
Grinding to Thickness.	703
Two Methods of Surfacing First Side.	703
(1) By Hand.	703
(2) On a Plate.	704
Mounting and Grinding Second Side.	704
Marking the Slab for Cutting.	704
Squares.	704
Irregular Pieces.	704
Cutting.	705
Squares.	705
Irregular Pieces.	705
Breaking off Corners.	705
Stacking.	705
Squares.	705
Irregular Pieces.	706
Locating the Stocks or Circles.	706
Rounding to Diameter.	706
With Stocks.	706
With Circles.	707
By Staggering.	707

	Page No.
Grinding Convex Surfaces Singly.	708
Grinding Tool.	708
Curvature.	708
Checking.	708
Correction.	709
Setup.	710
Grinding Convex Surfaces.	712
Beveling.	714
Grinding Concave Surfaces Singly.	716
Beveling.	716
Grinding Tool.	716
Curvature.	716
Checking.	716
Correction.	716
Setup.	716
Grinding Concave Surfaces.	718
Molded Blanks Procedure.	719
Rough Grinding Convex Surfaces Singly.	719
Grinding to Thickness.	719
Grinding Convex Surfaces.	719
Rough Grinding Concave Surfaces Singly.	719
Inspection.	719
Grinding to Thickness.	719
Grinding Concave Surfaces.	720

The purpose of rough grinding lens blanks is to form the glass until it has the correct curvatures and axial thickness for further grinding with finer abrasives

The term, 'rough grinding', should not mislead the reader into supposing that this operation requires little accuracy, as the later operations of fine grinding and polishing (see Chapter 12) are dependent upon correct rough grinding.

Several operations are necessary, in the processing of slab glass to form it into disks, that are not performed on pressings. However, when rough grinding has been completed a lens blank has the same form regardless of whether it was a slab or a pressing originally.

Lens blanks may be formed by hand grinding with loose abrasives using a process similar to that described for grinding prisms in Chapter 4. However, mechanical methods are superseding hand work rapidly, particularly in the initial stages. These newer methods are described in Chapter 8.

The abrasives used in grinding lens blanks cause the tool to wear, although not as quickly as the glass. The operator must keep this wear of the tool in mind, since the shape of the surface of the blank is determined by the shape of the tool. If the desired lens curvature cannot be obtained, the tool is checked with a radius gage and then corrected.

When grinding lens blanks singly, each blank is held in a 'spinner' (Figure 705) for grinding with a tool (Figure 706) which may be concave, convex, or flat depending upon the curvature desired. For convex surfaces, the operator must decide whether the spinner (Figure 705) should be fitted with a 'spivey' (pronounced *spiv'ee*) or a sleeve.

Though the majority of lenses are made from pressings, slab glass is used to some extent. Therefore, this chapter describes the working of lens blanks from slab glass, *i.e.*, cutting the glass into squares, forming the squares into disks, and the roughing operations on each surface. From this point on, the processing of blanks made from slabs and from pressings is identical.

Lens blanks may be rough ground either singly or in multiple, the latter by mounting them on spherical metal blocks.

The disk or pressing is usually ground initially with a very coarse abrasive; however, the volume of glass to be removed is the factor which determines the particle size of the initial abrasive to be used (see table, Figure 403).

SLAB GLASS PROCEDURE

Forming Disks

Determining the Thickness. — Before proceeding with the grinding, it is necessary to determine the proper thickness to which the slab must be ground. Methods for computing this thickness, which vary with the type of lens, are as follows:

Double-convex Lenses.—Add 0.016 inch to the finished axial thickness of the lens.

Double-concave Lenses.—Add 0.020 inch to the sum of the axial depths of each concave surface and the axial thickness. A convenient formula for calculating the axial depth or altitude of a concave surface segment can be written:

$$h = R - \sqrt{R^2 - r^2} \qquad (6)$$

where

h = the axial depth (or segmental altitude) of a particular concave curve or surface

R = the radius of the curve or surface

$r = \frac{1}{2}$ (the final diameter of the lens + an allowance for centering and edging)

Concave-convex Lenses.—Add 0.020 inch to the finished axial thickness of the lens increased by the axial depth of the concave surface computed as in the preceding paragraph.

Plano-convex Lenses.—Add 0.010 inch to the finished axial thickness of the lens.

Plano-concave Lenses.—Add 0.013 inch to the sum of the axial depth of the concave surface and the finished axial thickness of the lens.

Grinding to Thickness. *Two Methods of Surfacing First Side. (1)* By Hand. — A straightedge is used to select the surface of the slab which more nearly approaches a plane. This surface is then ground upon a mill by hand, until it is plane. The sizes of abrasives

used depend upon the flaws in the surface and how closely it approaches a plane. In all cases, however, FFF abrasive or its equivalent is used for the final rough grinding. The surfaces should be cleaned and the straightedge placed over diagonally opposite corners when testing.

(2) On a Plate. — Slabs having excess thickness and with one side close to being plane are mounted with this side in contact with a blocking plate as described below and the second side is ground. The thickest slabs or portions of the slabs are mounted on the outer edges of the plate and the block is ground until the surfaces are plane, free from defects, and the slabs are of an almost uniform thickness. After the plate has been heated sufficiently, the slabs are removed, cleaned and then processed further as outlined below.

Mounting and Grinding Second Side.—The ground sides are mounted with stickum or beeswax on a blocking plate and ground to the desired thickness as computed above. The pieces are mounted symmetrically on the block, with control pieces or 'markers' for checking the thickness extending over the edge at quadrant points.

The procedure for mounting is the same as that described for prisms in Chapter 4. The same abrasive grades are used to finish the second surface as are used for the first side. After grinding, the block is reheated and the slabs removed, degreased, and cleaned.

Marking the Slab for Cutting. *Squares.*—The size of the squares depends upon the final diameter, and the allowances needed for cutting and rounding, and for centering and edging. The allowance for cutting and rounding permits the correction of irregular edges resulting from cutting and provides for the grinding necessary to produce a rounded stack. Slabs about 1/8 inch thick require only an allowance of about 1/8 inch for cutting and rounding while greater thicknesses require more. The minimum allowance for centering and edging is usually 0.100 inch on the diameter, but lenses of large diameter or a long radius of curvature require more. A scale and pencil are used to mark the slabs into squares of the proper size as shown in Figure 701(a).

Irregular Pieces.—It is sometimes possible to get more lens blanks from a slab of glass by cutting it into irregular pieces marked with one or more circles, as illustrated in Figure 701(b). Circles of the required diameter are drawn with a template on the surface of the slab. These circles should be placed far enough apart to allow for cutting and rounding, and to avoid making sharp turns between the circles

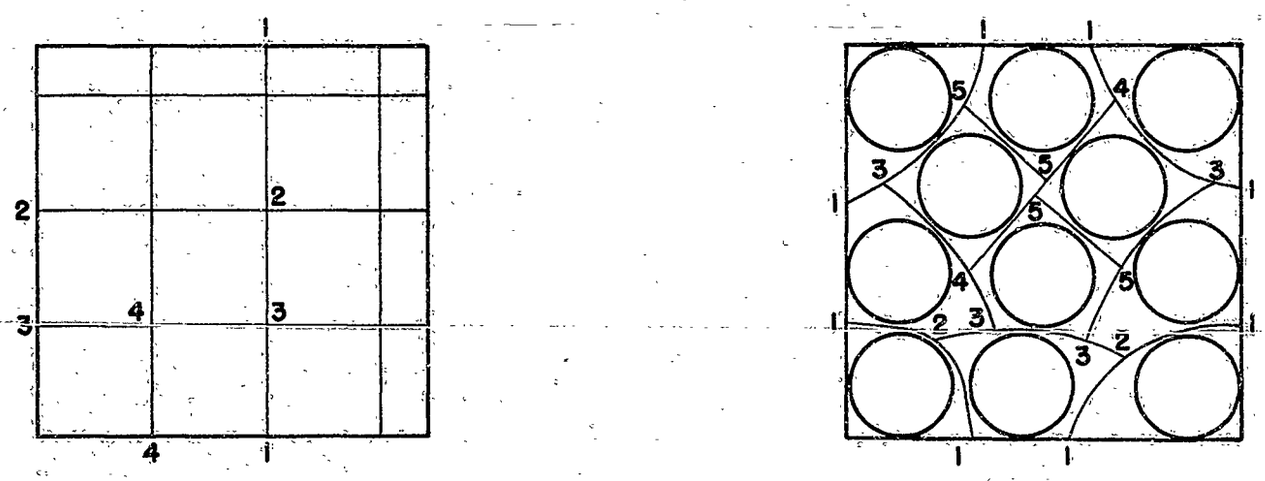

(a) Square Pieces (b) Irregular Pieces

Figure 701.—Two Methods of Marking a Square Piece of Glass for Obtaining Smaller Pieces to be Made into Round Elements.

The digits indicate a suitable sequence for cutting. Where the same designation is repeated, the sequence is optional. Note that for the proportions chosen two more pieces may be obtained by marking and scribing as shown in the irregular pattern.

when using a scribe. When the layout of circles has been completed, lines are drawn to indicate where the cuts are to be made. Ordinarily, these cutting lines are drawn midway between the circles, but small deviations from this practice are permissible in order to provide for straighter cuts.

Cutting. *Squares.*—A glass cutter such as can be purchased in most hardware stores is used to scribe the surface. Each line scribed should be as short as possible and between equal areas of glass. If the area is not equal on each side, the cut sometimes deviates from a straight line and passes through the smaller area. Moreover, scribed lines should not intersect. When scribed lines cross each other, the break sometimes cuts across a corner and takes the path of the intersecting line. If cross breaks are required, first scribe and break in one direction, then cross-scribe and break in the other direction.

Thin glass can be broken with a bending motion of the thumb and index finger on each side of the scribing, but it is necessary to turn thicker glass over and tap it with a small hammer above the scribed line. It may be necessary to wet the surface in order to see the line.

Glass greater than ½ inch in thickness usually requires mechanical cutting.

Irregular Pieces.—After the lines have been drawn, scribings are made which do not intersect. Lines nearest the corners are the first to be scribed and these corners are then ready to be cut from the slab. The slab is turned over and tapped with a small hammer at a point on the line which is between and nearest any two circles.

The tapping should be continued only until the fissure reaches about halfway up to the surface being tapped. This tapping should be localized and repeated at any point on the line where it is close to a circle. Each fissure is then caused to spread by alternately tapping directly over each end of the fissure.

After the corner cuts have all been made the remaining area is cut into strips and pieces in some such sequence as is shown in Figure 701. As far as possible the successive scribing lines (and cuts) are short, divide equal areas, and do not intersect.

Breaking off Corners.—In laying out slab glass for large lenses, it is advisable to use a template and, after cutting the squares, to remove most of the excess glass at the corners with a pair of pliers or in a vise. The operator should wear safety goggles and gloves when so removing the excess glass.

When using pliers, the slab is placed on a flat bench top with the corner to be removed overhanging the edge. Holding the slab on the bench with the left hand, the pliers are clamped on the corner with the right hand and the corner is broken off with a sudden and swift downward motion.

Breaking the corners in a vise is similar to breaking with pliers. The corner to be broken is placed between the jaws of the vise which have been covered with cloth previously, and the jaws closed until they make a light contact with the glass. Holding the piece with the left hand, it is hit with the heel of the right hand, using a sudden and swift inward and upward movement. No attempt should be made to break the glass close to the circle since the break usually will not be perpendicular to the surfaces.

Stacking. *Squares.*—Some workers mark on each piece the 'best' corner, namely, the corner which includes the angle nearest 90° (or other desired angle).

A hot table or electric hot plate is covered with a paper towel, and the pieces, arranged on it neatly, are heated slowly until stickum will flow on the surfaces in a thin layer. Several 90° V-plates, and a pair of tongs or tweezers are arranged nearby. Oil-surfaced paper is creased lengthwise and placed in the grooves of a V-plate whose channels should be deep enough to give the necessary support to the stack. The paper need extend only about ¼ inch above the sides of the stack. Then a thin layer of stickum is applied to one surface of all pieces except the last piece for each stack.

After a rejected prism, which has been warmed previously, has been placed in one end of a channel, a piece is picked up with the tongs and placed in the channel with the best corner down and the stickum-free surface facing the prism and touching it. Then a second piece of glass is placed against the first with its

stickum-free surface likewise facing towards the prism. This process is continued until the stack has reached a length of about 6 inches, after which a stickum-free piece of glass is placed against the stack, followed by another heated prism. The second prism is now pressed against the stack to force out any excess stickum while each individual piece of glass is pushed down against the channel faces of the V-plate with a wooden stick. After the stack has been formed in this manner, it is allowed to cool and is removed from the block. The paper is then removed from the stack with a few short pulls.

Octagonal pieces also may be assembled into stacks using the same procedure.

Irregular Pieces.—With irregular pieces it is necessary sometimes either to round each piece down roughly on a mill to a safe distance from the circle, or to grind flats perpendicular to each other on two adjacent edges of each piece at a safe distance from the circle. Having done this, the pieces can be stacked with these flat edges in contact with the faces of the V-plate. The stacking procedure is the same as that for square pieces.

Locating the Stocks or Circles. — Either metal stocks waxed on the ends or circles drawn around a template with a pencil may be used as guides for the rounding operation which follows. In either case, the diameter of the stocks or template should include an allowance for centering and edging. Metal stocks, ¼ inch thick and turned to the proper diameter, are heated and a thin layer of stickum is applied to each. The stack, still slightly warm, is set up on one end. A stock is picked up with the tongs and placed on the center of the end surface, or perhaps slightly nearer the best corner. After the stickum has set, the stack is inverted and a stock is placed on the other end.

Care should be taken to insure that the center of each circle or the axis of each stock is on the same straight line, which should be perpendicular to the plane surfaces of the glass. If this precaution is not taken, the edges of the glass will not be at right angles to the plane surfaces after the rounding has been completed. If the stack is placed on end with the first stock down, the second stock can be located by sighting alternately from the two adjacent best sides while visualizing the wall of the lower stock as projecting up to the top surface, and by moving the upper stock accordingly. Or using an alternative method, if a reasonably flat area parallel to the axis and at the specified angle to the other side is ground on each of two adjacent sides of the stack, the edge of a scale may be held against first one of these sides and then the other as a guide for placing the second stock.

Rounding to Diameter. *With Stocks.* — The most uniform side of the stack is ground until it is flat, equidistant from the stocks on each end, and with an allowance for further grinding with finer abrasive without contacting the stocks. The next better adjacent side is processed in the same manner, and approximately at right angles to the first side. Then the remaining sides are ground. After all sides have been ground approximately at right angles to each other, the corners of the stack are ground off. To do this, one of the lengthwise edges of the stack is placed on the mill with the diagonal from the lowest to the highest corner of the end face perpendicular to the surface of the mill. The edge is ground until a new side is produced and at the same distance (as the original four sides) from the stock. Control over the grinding can be obtained by observing the approach of the stock to the mill surface. After repeating this procedure for the other three edges, the stack will be octagonal, (see stack at right in Figure 702). This procedure is repeated for all corners thereby increasing the number of sides to sixteen. The stack is now ready for rounding. The rounding is done corner by corner, taking care to complete one before proceeding to another in order to detect defects of rounding while they are easiest to locate.

The rounding is performed by 'rolling', *i.e.*, by placing the hands with the fingers over and on the far side of the stack, the thumbs on the near side, and giving a twisting motion down and under with each hand alternately so the direction is opposed to that of the rotation of the mill. The progress of the rounding should be observed frequently by removing the stack

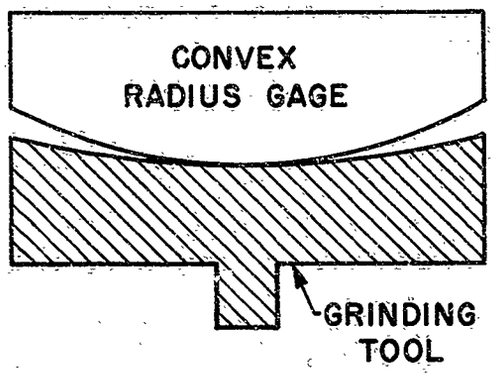

(a) Concave Grinding Tool Should be 'Low' to the *Convex* Gage—*i.e.*, Weaker, Flatter, or of Slightly Greater Radius than the Convex Gage.

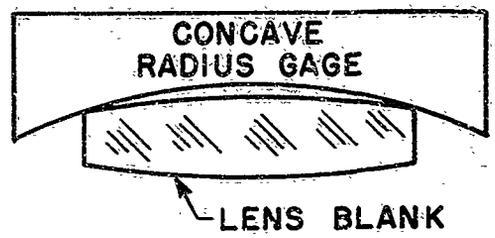

(b) Convex Lens Surface Should be 'Low' to the *Concave* Gage—*i.e.*, Weaker, Flatter, or of Slightly Greater Radius than the Concave Gage.

Figure 704.—Radius Gages for Checking the Grinding of Convex Lens Surfaces.

to one side and then to the other, on the surface of the tool.

If the difference is not uniform, the tool must have some metal removed to correct it The curvature of the tool can also be determined by checking the blank ground on it. (See Chapter 12.)

Correction.—Minor correction of the rough grinding tool may be made by rubbing an abrasive stone across the surface to be removed, while the tool is revolving in the machine. The container of abrasive used for grinding should be placed to one side before the correction operation starts in order to protect its contents from contamination.

Greater irregularities in the surface must be corrected by mounting the tool in a lathe. While an abrasive stone may be used for small cuts, deeper ones require a round nose, steel file. A tool grinder is used to round the nose of the file which may be ground either semicircular or, for a long radius, close to the desired radius of the tool.

The tool is checked again with the proper radius gage and the boundaries of the incorrect portions are marked with a crayon. The tool is then rotated and as it rotates, the surface between the boundaries, *i.e.*, the surface to be corrected, is filled in with crayon. A cut is taken across this surface which will remove the marking and also some of the metal. The tool rest should be placed near the surface to be corrected and on the near side of the center of rotation. The right hand is used to hold the file by the handle and to guide it, while the left hand is used to hold it firmly on the tool rest and allow it to pivot there. When it is possible to do so, some workers prefer to make a shearing cut by raising one edge of the file. After each cut, the surface of the tool is checked, and if necessary the high places are marked again and cut. This process is continued until the desired curvature has been obtained.

Probably the most difficult surface to correct is a 'wavy' surface which is not only related to the gage improperly, but the points of contact between the gage and the tool on the edge change as the tool is rotated. For example, a gage placed properly on a concave tool may make contact at the upper left edge of the tool and also at a point midway between the center and the upper right edge; and after rotating the tool 60° about its axis, the gage may make contact on the tool one-third of the distance down on the left and just to the right of center. These points of contact are usually the crests of the waves in the surface. To correct this type of surface, the file is moved in slowly until it begins to cut, the cutting action being of a chipping nature as long as a trace of the wave remains. The file may have to be moved inward at different periods and along the surface to remove all traces of the wave or waves. When checking after reshaping, the tool still

may not have the proper curvature, but the difference between the gage and the tool at corresponding points and for any position of rotation of the tool should be the same. Only even cuts at the proper places should be required to form the tool until the curvature is uniform and related properly to the gage. A wavy surface is usually the result of an unconscious raising and lowering of the file handle when the tool rest is too far from the surface.

The 'double-curve' in another type of defective tool surface. The curvature of one section of the surface is of one radius and the curvature of the remaining section is of another. This defect requires less skill to correct than the wavy surface.

To shape a tool to a curvature nearer that of the gage, the greatest amount of metal is removed where contact is made when the gage is placed in the proper position, and smaller amounts as the point of points are approached where the light showing between the gage and the tool is greatest. Hence, the least metal is removed where the greatest amount of light is showing. The reverse is true when the curvature is to be farther from that of the gage.

Setup.—After the rounded stacks have been separated, the tool has been shaped and a spinner (see Figure 705) has been made which will fit the rounded element, the spherical surface is ready to be ground. The proper radius gages, a micrometer, a pan of clean water, the spinner, a magnifying glass, a piece of clean cloth, and a brush for applying the abrasive mixture to the tool are arranged within easy reach (see Figure 706).

Usually the coarser abrasive is placed in the pan through which the machine spindle projects, while the finer abrasive and water is placed in a jar near the tool. The size of the abrasive chosen for the initial grinding of the curvature depends upon the volume of glass to be removed.

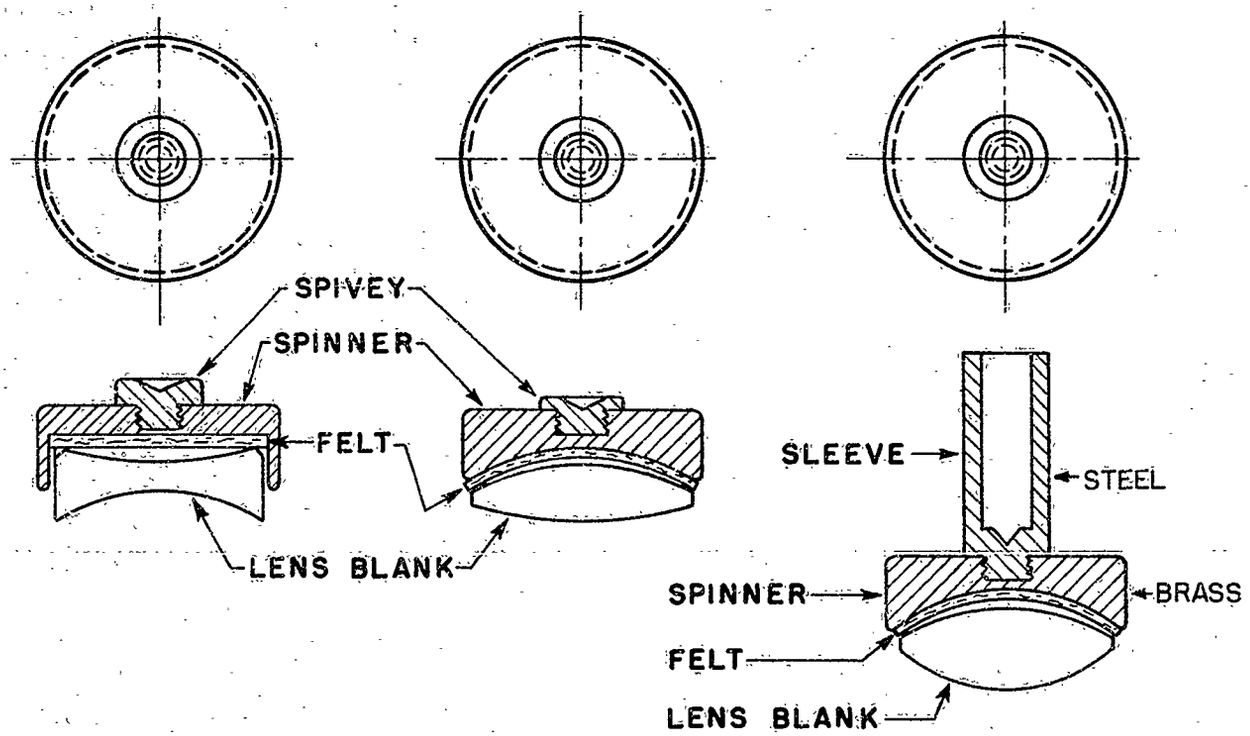

(a) Plain Spinner for Grinding a Concave or Plane Surface

(b) Plain Spinner for Grinding a Convex Surface

(c) Sleeve Spinner for Grinding a Convex Surface

Figure 705.—Plain and Sleeve Spinners for Holding Lens Blanks While Hand Grinding.

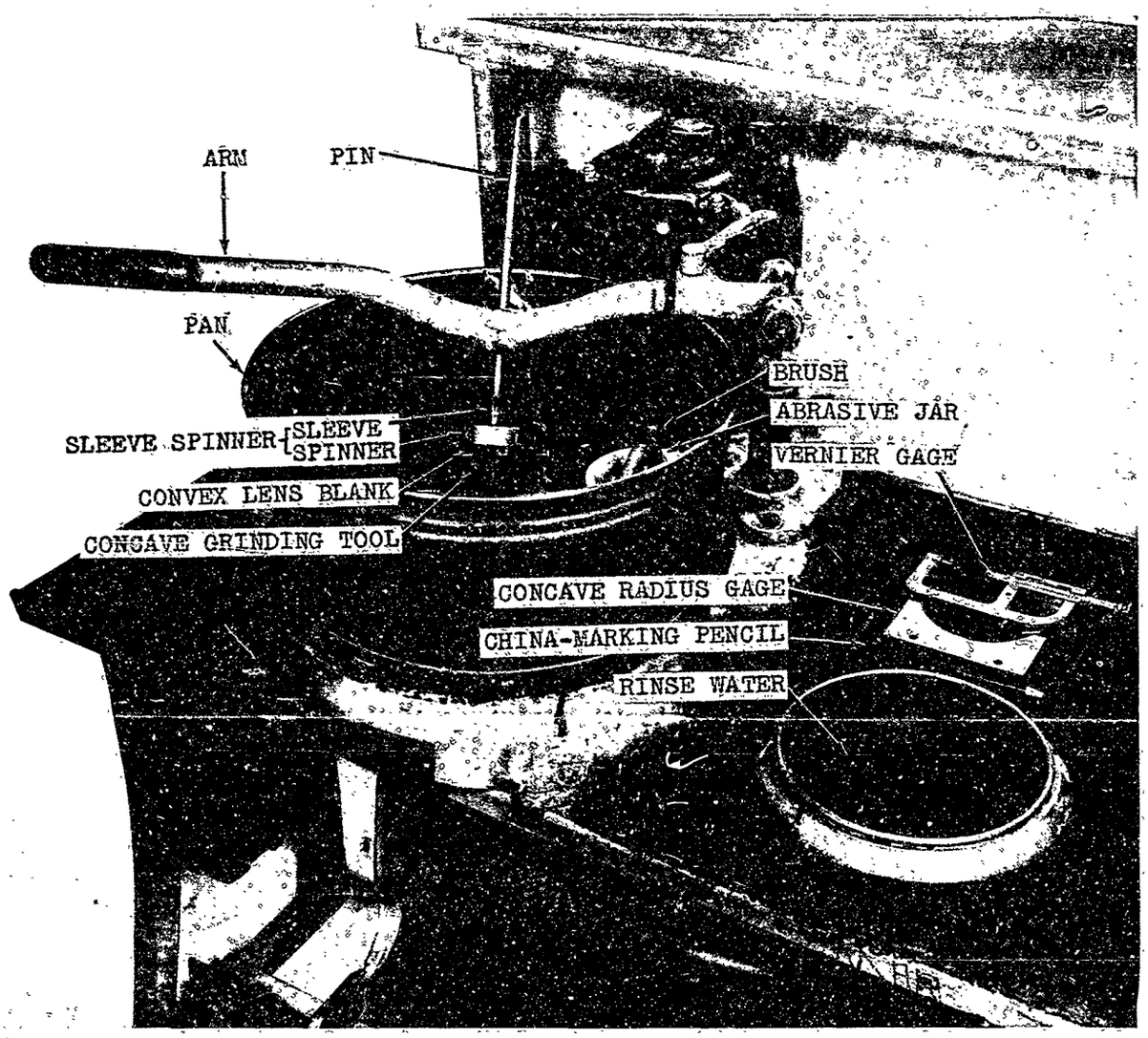

Figure 706.—Machine Setup for Rough Grinding a Convex Spherical Surface.

The arm and pin are adjusted so that the arm clears the edge of the pan by an inch or two when at the lower extremity of the sweep. The pin, when in position in the spinner covering a lens, should pass over the center of rotation of the tool. Rough grinding tools are always mounted in the spindle.

Whether a plain spinner or a sleeve spinner is to be used to hold the lens blank during the grinding operations depends on certain interrelationships of the dimensions of the lens, the spinner that it is proposed to use and, whether the blank is formed or has been made from slab glass.

Some formulas that can be used for selecting the proper type of spinner, which are based on the interrelationships of these various dimensions, are given in Figure 707. The meaning of the symbols that are used is given in the upper right hand corner of the figure. The directions, numbered 1 to 4, for using the formulas are given immediately below them. It should be noted that if direction No. 1 indicates that a sleeve spinner should be used, it should be checked with direction No. 2 before work is started. Furthermore, it should be remembered that a plain spinner is used only when the formulas do not indicate that a sleeve spinner is necessary. The symbol "X," when used in

either "Y" column in the table of formulas, is the value of "X" obtained from the appropriate formula given under the corresponding "X" column. The interpretation of the symbol for infinity (∞) used in column "Y" for a plane or concave element of slab glass is that the value of "Y" can be disregarded for this group of elements and the determination of whether or not a sleeve spinner is to be used will depend only on the value of the formula given under slab glass in column "X" for a plane or concave element. The table at the bottom of Figure 707 gives four examples showing data and calculations for typical elements, and in the last column, the type of spinner that should be used as determined by evaluating the formulas.

Grinding Convex Surfaces.—Before starting to grind the surface, mark the central area with a china-marking pencil. By noting the reduction in size of these markings, as the grinding progresses, the operator can estimate the amount of grinding still to be done and can determine when the lens blank is ready for the next finer abrasive. The axial thickness does not change so long as a crayon spot remains, since the surface under the spot is still a portion of the original plane surface.

A long radius of curvature makes it necessary to leave a larger spot after each abrasive than is necessary when grinding a lens of short radius of curvature. The spot should be removed with the final abrasive (FFF abrasive or its equivalent) that is used previous to fine grinding. The thickness must be checked with a micrometer once the spot has been removed. When the thickness is excessive and no spots are used, the amount of glass to be removed and the proper abrasive or its equivalent to be used may be determined by referring to Figure 403. However, it may be possible to allow slightly less amounts for grinding with each abrasive, provided the surface is inspected with a magnifying glass to determine whether each abrasive, especially the last, has removed the pits caused by the preceding one. The abrasive and water mixture is applied to the surface of the rotating tool with the brush. With a blank in the spinner and the tool at rest, the blank and spinner are placed on the surface of the tool under the pin and the tool is started. This in turn causes the blank to rotate. An oscillating motion is applied to the handle of the arm with the left hand to aid the action and reduce the danger of excessive wear on any one part of the tool. To avoid grinding the lens blank so it is prismatic (see Figure 1306) it is important that the blank spin. Therefore if the blank ceases to spin, the machine should be stopped and the cause ascertained and corrected. The difficulty may be due to the point of the pin having worn dull, or the spivey hole being worn too deep or having become filled with abrasive.

Coarse abrasives are used to remove large amounts of glass rapidly and to shape the blank. Finer abrasives are used to reduce pits and light scratches. The finer abrasives should not be used to remove deep scratches caused by the coarser abrasives. Such scratches should be removed by regrinding with the coarser abrasives. The abrasive is applied to the tool as needed and each application is allowed to 'break down' before the next application is made. This 'breaking down' is most important towards the completion of the particular abrasive grind since the final surface is then much finer than it would be otherwise.

After grinding for a short period the first lens blank is washed in the pan of water, dried with the cloth and the curvature of the surface checked with the proper concave gage. The observer should be able to see light passing between the gage and the blank at and around the center. Slight changes in the radius of the blank will result if the grinding is confined to one section of the grinding tool. Continued sweeping of the work over the lower portion of a concave tool will cause that portion to wear away, and, as a result, reduce the radius of the tool and consequently reduce the radius of lenses ground upon the tool. Conversely working the blank on the outer section of a concave tool will wear away that section thus slightly lengthening the radius of the tool and the blank. The amount of sweep should be kept uniform and of great enough length to prevent excessive wear in one particular portion of the tool. It should be remembered that the surface speed of the tool is greater at greater distances from the center of rotation.

TABLE SHOWING METHOD OF SELECTING PROPER TYPE OF SPINNER

Character of Blank Surface in Contact with Spinner	FORMULAS			
	X		Y	
	Slab Glass	Formed Blank	Slab Glass	Formed Blank
Convex	$T_a+h+m+0.01$	$T_a+m+0.01$	$X-h$	$\frac{X}{2}$
Plane or Concave	$T_e+h+m+0.01$	$T_e+h+m+0.01$	∞	$X-h$

DIRECTIONS

1. Use a *sleeve spinner* if either (or both): X is more than R, or Y is less than h.
2. A *metal stick*, usually of brass or steel, may be substituted for the sleeve spinner, when processing small lens blanks having a spherical aperture of 90° or more.
3. Use a *plain spinner* in all other cases.
4. The above formulas are based on the assumption that it is necessary to remove only a reasonable amount of glass from the blank. If an excessive amount must be removed, it may be advisable to start with a sleeve spinner and later change to a plain spinner.

EXPLANATION OF SYMBOLS

r_1 = finished radius of surface about to be ground
r_2 = finished radius of surface in contact with spinner
d = finished diameter of lens
t_a = finished axial thickness of lens
m = axial distance from point of pin to inner surface of spinner mount which contacts glass
W = allowance for centering and edging
T_a = axial thickness of blank when starting
D = diameter of blank $= d+W$
R = radius of blank $= \frac{D}{2}$
h = altitude of finished surface segment (concave or convex) to be ground $= r_1 - \sqrt{r_1^2 - R^2}$
T_e = edge thickness of blank when starting
0.01 = allowance for fine grinding and polishing
∞ = infinity (an indefinitely large number)
$>$ = is more than
$<$ = is less than
All dimensions are in inches
For examples illustrating use of formulas, see below.

EXAMPLE NO.	GIVEN, OR MEASURED DATA								CALCULATE							USE
	Type of Blank	r_1	r_2	Character of Blank Surface in Contact with Spinner	d	t_a	m	W	T_a	D	R	h	T_e	X	Y	
1.	Slab Glass	2.478	1.792	Convex	0.999	0.269	0.125	0.100	$t_a+0.016$ 0.285	1.099	0.548	0.062	--	$T_a+h+m+0.01$ $0.482<R$	$X-h$ $0.420>h$	Plain Spinner
2.	Slab Glass	2.080	−1.177	Plane or Concave	1.468	0.804	0.125	0.200	--	1.668	0.834	0.175	$t_a+h+0.020$ 0.999	$T_e+h+m+0.01$ $1.309^*>R$	$\infty>h$	Sleeve Spinner
3.	Formed Blank	3.337	4.723	Convex	1.749	0.414	0.125	0.100	0.534	1.849	0.9245	0.131	--	$T_a+m+0.01$ $0.669<R$	$\frac{X}{2}$ $0.3345>h$	Plain Spinner
4.	Formed Blank	1.701	∞	Plane	1.780	0.330	0.125	0.100	0.420	1.880	0.940	0.284	T_a-h 0.136	$T_e+h+m+0.01$ $0.555<R$	$X-h$ $0.271^*<h$	Sleeve Spinner

* Indicates calculated value which determines use of sleeve spinner for example given.

Figure 707.

If the curvature of the lens blank becomes too close to the gage, because the grinding has been done near the bottom of a concave tool, it can be restored by moving the center of oscillation (sweep) up the surface of the tool as necessary. The length of sweep may be kept the same, but should overlap a portion, in this case the upper portion, of the section worked previously. This movement of the center of oscillation up the surface of the tool may be continued until the top of the tool has been reached. The edge of the lens blank may be swept over the edge of the tool to produce the 'low' surface desired. Eventually, wear of the tool at the edge makes it necessary to move the center of oscillation toward the bottom, making sure with each new change to overlap the portion previously worked. This manner of working should keep the tool in shape for each particular abrasive, and by applying the same principles it can be given the curvature desired when working with the next finer abrasive. Although constant sweeping near the bottom of a concave tool tends to produce a shorter radius of curvature on the blank, and sweeping near the top a longer radius, nevertheless grinding at any point will affect the radius to some extent. The curvature of the blank should be checked frequently with the proper gage, especially after each abrasive stage. Special care must be taken when approaching the prescribed thickness to avoid removing too much glass, thus making the lens undersize. The lens blank should be kept 'low' or 'weak' to the gage, *i.e.*, of slighly greater radius than the gage. With each successive abrasive, the radius of curvature of the blank should be brought nearer to the prescribed radius, with the final abrasive making the curvature only slightly longer in radius than that of the locating shell. The pencil spot is removed with the final abrasive leaving an allowance of about 0.010 inch over the final axial thickness for fine grinding and polishing (see Chapter 12).

If, when comparing the convex blank with a gage, the center of the blank is lower than the gage, that is, does not touch it, the blank is 'low' or 'weak' to the gage. If the gage contacts the center of the blank only, the blank is 'high' or 'strong' to the gage. A spherometer set for the desired radius is convenient and easy to use for checking the radius of curvature of a blank that is being rough ground (Figure 708).

Beveling. — Beveling (sometimes called chamfering) is an operation to remove sharp edges and thus produce stronger edges which will not chip easily.

Although it may be necessary to bevel both sides before grinding either, it is customary first to bevel one side and rough grind the other. Then the ground side is beveled and the second side is ground. Both surfaces should be beveled before backing and blocking the lens blanks for fine grinding.

Universal Camera Corporation

Figure 708.—Spherometer Used for Gaging Lens Curvature.

A concave tool (having an aperture of about 120°) is always used for beveling. The curvature of the tool, which is of a shorter radius than that of the spherical surface of the lens, produces a bevel which is also a spherical surface; however, since this surface covers such a small arc, it is considered to be flat. Lens blanks may be beveled on the same machine that is used to grind the spherical surfaces. When beveling is done as a manual operation, which is usually the case, the machine arm is not used.

While the size of the bevel is not as critical as that ground on after centering and edging, it should be large enough to fulfill its purpose and not so large that any portion will remain after the final edging. A bevel of about 0.020 inch is usually sufficient for a lens blank having an allowance of 0.100 inch for centering and edging. Although this may be measured from the edge inward, it is preferable to measure the aperture, (*i.e.*, the lens diameter inside the bevel) and to consider the bevel as one half the difference between the aperture and the over-all diameter.

Specifications generally require a bevel of a certain size or angle, the most common being one whose angle is 45°. Although the bevel is considered to be conical, it is actually spherical. The radius of the beveling tool necessary to produce a bevel of any desired angle can be determined from the following formula:

$$r = \frac{d}{2 \cos A} \qquad (7)$$

where

r = radius of the concave beveling tool

d = diameter of the glass element

A = angle which the bevel makes with the axis of the lens

When a 45° bevel is desired, that is, when $A = 45°$, the formula becomes

$$r = 0.707 \times d \qquad (8)$$

In using either formula, it must be remembered that a convex surface must be beveled at an angle which will assure that the beveling tool is high to the surface of the lens blank, and consequently will touch this surface only at the edge. The limit is reached when the radius of curvature of the lens blank surface approaches that of the beveling tool. Before this limit is reached the steepness of the bevel angle is increased, again creating a condition where the tool will be high to the lens blank surface.

For beveling flat or concave surfaces both of the above formulas apply without any restriction.

The bevels are ground usually with FFF abrasive or an equivalent. If the diameter of the blank is much greater than the final diameter of the lens and a large bevel is desired, FF abrasive or its equivalent may be used for the initial grinding and FFF abrasive or its equivalent used for finishing the bevel.

The method of beveling and the various ways of holding circular glass plates while beveling, as described in Chapter 6, may be used for lens blanks.

When the blank cannot be held with the fingers it may be necessary to use a suction cup, and if this is not possible due to curvature, it can be mounted on the end of a stick with stickum.

When the blank is held with the fingers for beveling, the following method may be used:

The blank is held with the thumb and first two fingers of the left hand on opposite sides and it is placed on the surface of the tool with about one third of the lens projecting above its rim. The thumb is placed below the projecting surface while the first one or two fingers rest on and over the center of the top surface. The thumb of the right hand is placed on the uppermost edge of the blank a short distance to the right of the center. The first finger of the same hand should rest on the upper surface, but near the lowest edge of the blank. The right hand is used to rotate the blank. The left hand is used to hold the blank during the short period when the right hand is not causing it to rotate. During rotation the left thumb should be relaxed. The finger or fingers of the left hand act as a guide between which the surfaces near the edge will pass, and their tips should form a center about which the blank can be rotated.

During the short period that the left hand is acting as a guide, the thumb of the right hand, while still on the edge of the blank, should push to the left, until the thumb is fully extended.

At the same time, the first finger, which has been extended, is kept in contact and pulled upward toward the rim of the tool with an arc-like motion until it touches the thumb. When the thumb and finger of the right hand have reached the limits of their movement, the blank is held with the thumb and finger or fingers of the left hand, while the thumb and finger of the right hand return to their original location to repeat the process.

This method of beveling makes it necessary to correct the tool frequently, because its curvature becomes longer due to all the wearing being done on the upper portion where the surface speed is greater. This method is very satisfactory in spite of the frequent correction of the tool that is necessary.

Chipping can be avoided during beveling, if the surface of the tool is smooth and if the initial pressure is light. The pressure may be increased as the bevel is formed.

Grinding Concave Surfaces Singly

The operation and procedure for grinding concave lens blanks differ from those for convex blanks in some respects and it is only these differences which will be discussed here.

Beveling.—It is usually necessary to bevel both sides of a blank before rough grinding concave surfaces, because most such curves are ground in flint glass, which chips more easily than crown glass.

If the bevels are the correct size, the first concave curve may be ground to meet the bevel, thus eliminating the necessity for rebeveling the first side. This may necessitate grinding away the greater part of the bevel on the other side in order to obtain the desired thickness. Although it may seem useless to bevel this side before grinding the curvature, it is a safer procedure to follow.

Before starting to fine grind in preparation for polishing, it is necessary that both sides of the blank be beveled. The procedure for beveling is the same as for convex blanks, and the same formula can be used to determine the radius of the beveling tool.

Grinding Tool.—A convex tool (see Figure 703) is used to grind a concave surface, and like the tools used for convex blanks, it can be made of cast brass, bronze, iron, or meehanite.

Curvature.—The radius of curvature of the tool should be slightly shorter than the final radius of curvature of the lens for the same reason that convex blanks are ground with a tool of a longer radius of curvature, *i.e.*, in order that the grinding may be from the edge of the blank inward with each successively finer abrasive used. Such a tool produces a surface which is again 'high' or 'strong' to the gage. With each successively finer abrasive, the radius of the tool should be slightly longer.

Checking.—A concave radius gage (see Figures 703 and 709) is used to check the curvature of the convex tool. The tool should be high to the gage, *i.e.*, of slightly less radius than that of gage. If the proper relationship does not exist uniformly over the entire surface, the tool must be corrected. A method for determining the curvature of the tool by checking the surface of the lens produced by it is described in Chapter 12.

Correction.—The procedure for correcting a convex tool presents only a few differences from that for correcting a concave tool.

It may be necessary, when making large corrections, to grind the nose of the file almost flat, but with a front clearance. The tool rest should be placed near the surface to be corrected and moved to new positions when necessary. Metal is removed from the convex tool just as it was for the concave tool when desiring to shape the surface nearer to the gage; however, the effect on the curvature of the tool is reversed. Removing the greatest amount of metal from the center of the convex tool and decreasingly less toward the edge will result in the tool being of a longer (not a shorter) radius of curvature. Removal of the greatest amount of metal near the edge and decreasingly smaller amounts toward the center of the convex tool produces a curvature of shorter (instead of longer) radius.

Setup.—The pin of the arm should pass over the center of rotation of the tool when placed in the spivey and should be directed toward the center of curvature. (See Figure 710.)

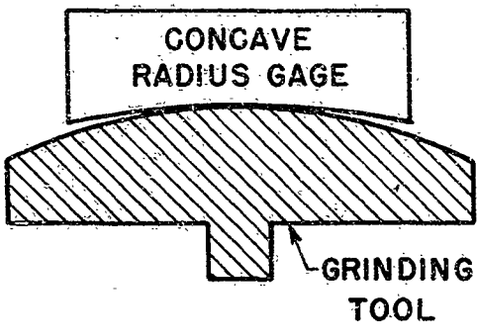

(a) Convex Grinding Tool Should Be 'High' to the *Concave* Gage—*i.e.*, Stronger, Sharper, or of Slightly Smaller Radius than the Concave Gage

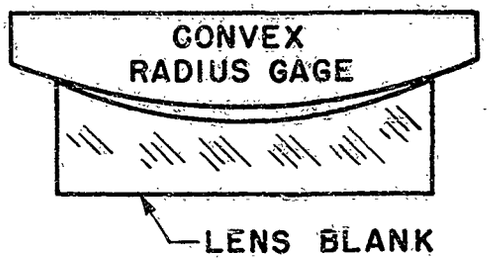

(b) Concave Lens Surface Should Be 'High' to the *Convex* Gage—*i.e.*, Stronger, Sharper, or of Slightly Smaller Radius than the Convex Gage

Figure 709.—Radius Gages for Checking the Grinding of Concave Lens Surfaces.

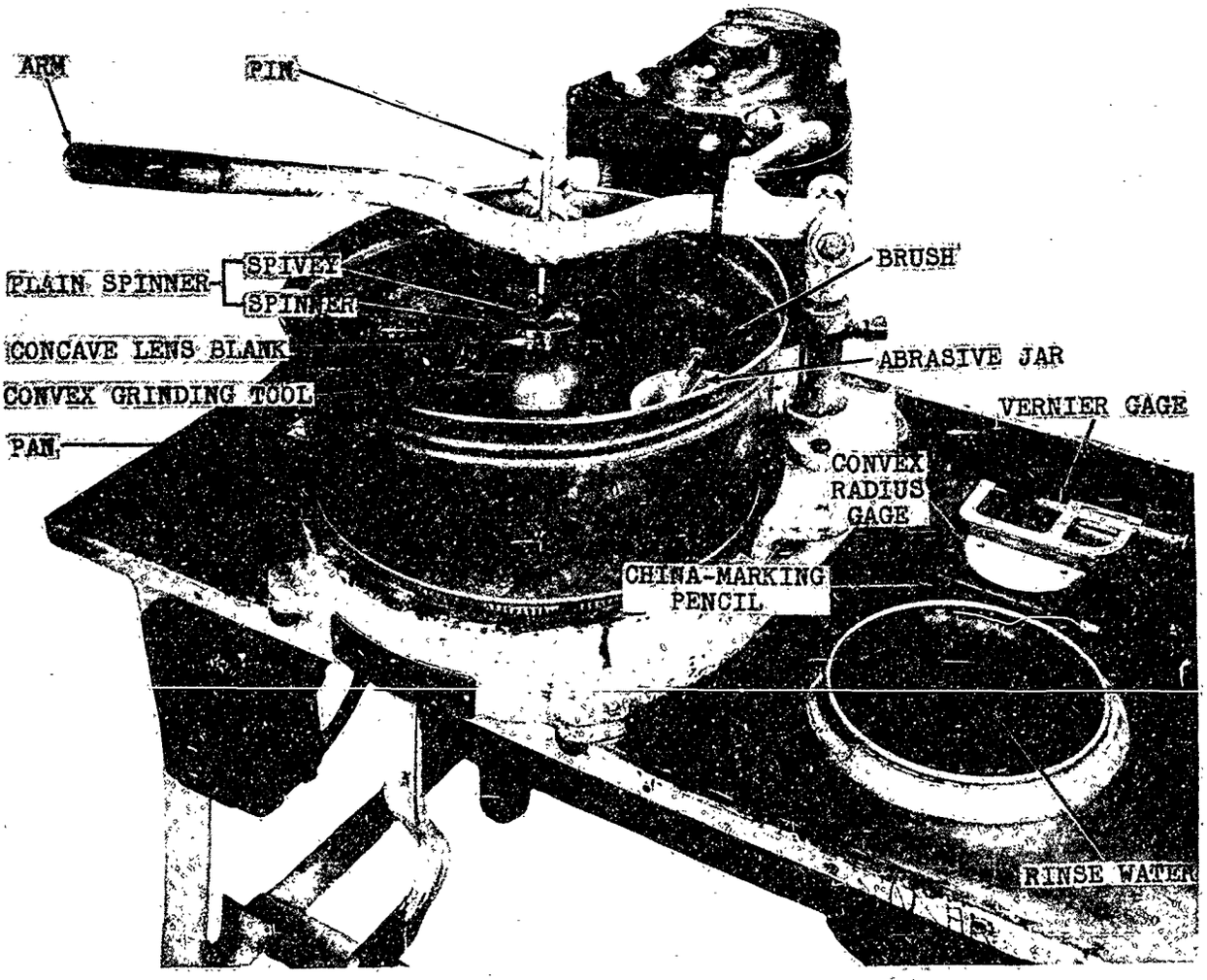

Figure 710.—Machine Setup for Rough Grinding a Concave Spherical Surface.

A vernier gage, a micrometer with spherical spindles, or other similar instrument that can measure the axial thickness without interference from the curved surfaces of the lens blank, is necessary to replace the flat surfaces of the anvil and spindles of the micrometer used on convex surfaces.

A sleeve spinner is never necessary for spinning a concave surface.

Grinding Concave Surfaces.—Unlike most convex lenses, it is necessary to start grinding the surfaces by hand before proceeding to grind by spinning. The blank is held with the thumb and first two fingers of each hand with the center of the plane surface of the blank touching the far surface of the tool. The blank is worked up and down on the surface of the tool, and rotated about ¼ turn after 3 or 4 strokes. More abrasive is applied as needed. When the diameter of the concavity ground by hand is equal to about ½ of the diameter of the blank, it is usually possible to change to grinding with a spinner.

The concavity should be inspected before being ground completely with the first abrasive, in order to determine how well the concavity is centered. If the concavity is off-center, the blank should be held against the tool with the hand, with the side of the blank towards which the concavity must be moved near the bottom edge of the tool. After a short grinding period the concavity should be examined again.

If necessary, the procedure above is repeated, otherwise spinning continues until the element is ready for the next finer abrasive.

Grinding by hand should be distributed over the entire surface of the tool to prevent localized wearing. Special care should be taken to avoid overworking that portion of the tool that is midway between the center and the edge, because excessive use here will make this region of the tool almost conical. Both the tool and the blank should be checked frequently for curvature.

Continued sweeping over the lower portion of the tool will shorten the radius. Hence, to lengthen the radius, the sweeping of the tool should be kept near the top. If the surface of the blank is a trifle too high, and it is desired to bring it nearer to the gage, the sweep is confined to the upper portion of the tool. This will cause the upper portion to wear, producing a flatter surface, *i.e.*, of longer radius of curvature, on both the blank and the tool. Conversely, if it is desired to grind a higher surface, the sweep is kept near the bottom of the tool. This will cause the tool to wear to a shorter radius and produce a like curvature on the blank.

It may be necessary to sweep the edge of the blank over the edge of the tool. While the center portion of the blank is being ground at all times, it is being ground by the fastest part of the tool when in this position. No grinding is being done on the surface that is not in contact with the tool, and the surface on the inner side of the central portion of the blank is being ground with a slower portion of the tool. This produces the greatest 'high' possible but grinding here should not be continuous and the sweep should be kept uniform. When it is necessary to relocate the center of sweep to keep the proper curvature, the new location should overlap the section worked previously.

After completing the first side with FFF abrasive or its equivalent, it is not necessary to determine the axial thickness if the surface grinding is stopped when the surface intersects the surface bevel.

When the grinding has been finished, the surface of the lens blank should be inspected with a magnifying glass for pits, scratches, bubbles and other defects.

The procedure is the same if the other side is concave, except that the thickness should be checked frequently.

The grinding with each abrasive should be stopped when a definite thickness above the final thickness has been reached (see Figure 403). Grinding with the final abrasive used for roughing (FFF or its equivalent) should be stopped when the blank is 0.010 inch above the final thickness.

The blank should be checked frequently with a convex radius gage, and should be kept high to the gage, *i.e.*, of shorter radius than the gage. The curvature of the blank should be made flatter with each successively finer abrasive until it conforms almost to the gage when

ready for fine grinding and polishing. (See Chapter 12.)

MOLDED BLANKS PROCEDURE

Rough Grinding Convex Surfaces Singly.—It is advantageous to mount the blanks for mill grinding when the thickness is excessive and before rough grinding is done singly.

Grinding to Thickness.—The thickness and curvature of several blanks are determined while a blocking plate is being heated slowly. After a layer of stickum is spread on the plate, markers are placed at quadrant points and blanks of approximately the same thickness are mounted with the thickest blanks near the edge of the plate. The markers should be of slab glass, of the same type of glass and about as thick as the thickest blank. The blanks should be arranged symmetrically on the plate and mounted with all like curvatures and better surfaces down. It may be necessary to pour additional melted stickum on the plate between the blanks to form a layer thick enough to hold the lenses while being ground.

The thickness after processing on a mill should be from 0.020 inch to 0.025 inch above the final thickness. This is to allow for the lean a blank may have as a result of mounting. The block is ground on the first side until the amount left to be ground off the thinnest blank is equal to that which has been removed already from this blank. Successively finer abrasives should be employed until FFF abrasive or its equivalent has been used to complete the grinding. In the center of the exposed spherical surface of each blank will be a plane surface which will provide a greater area of contact when mounting for the second side grinding.

The plate is heated, the blanks and markers are removed, stickum is applied to the plate again, and the same markers are inverted and remounted at quadrant points. Next the blanks are mounted with their plane surfaces in contact with the block. If the area of each plane surface is fairly large in comparison to that of the spherical surface, it should not be necessary to pour melted stickum on the blocks between the blanks. After cooling, the block is ground with successively finer abrasives, until, at the completion of the grinding with FFF abrasive or its equivalent, the blanks are of the desired thickness.

Grinding Convex Surfaces.—While blanks seldom need rounding, any burrs should be removed before grinding the surfaces. The remainder of the processing is the same as for grinding convex lens blanks from slab glass, except that after the first spherical surface has been completed, the thickness is measured to determine with what abrasive the spot on the other side should be removed.

A variation of this procedure is to process the first spherical surface of each blank completely, mount on a blocking plate with this surface in contact with the plate, grind to a thickness of 0.014 inch to 0.016 inch over the final axial thickness, and then, in like manner, complete the spherical grinding of the other side.

Rough Grinding Concave Surfaces Singly. *Inspection.*—The blanks are inspected thoroughly before processing to discover any that might make it necessary to alter the procedure.

The curvatures of the molded surfaces are checked with the proper radius gage, to insure that they are sufficiently high to permit an approach, with each successively finer abrasive, to the final curvature.

Burrs on the edges of the blanks should be removed to reduce the possibility of chipping or other difficulties while processing. The burrs on a blank can be removed on a mill either by beveling the edge of the curved surface, or by grinding the flat surface which usually surrounds the edge of the concavity.

Grinding to Thickness.—A layer of stickum is applied to a blocking plate which has been heated sufficiently for the stickum to flow. Markers of slab glass approximately as thick as the thickest blank, are placed at quadrant points and extended over the edge of the block. The blanks are placed in contact with the plate and with the concavities of shorter radius facing the block. Blanks of lesser edge thickness are mounted near the center. The block is ready for grinding after it has cooled. Formula (6) used for processing concave lenses from slab glass is used to determine the thickness to which the block must be ground.

Blanks are often of such excessive thickness that a large part of any molded curvature that might exist on the side being ground, is removed. It is necessary, therefore, to bevel the edges of each blank after the desired thickness has been reached.

Grinding Concave Surfaces.—The surface which faced the block during the grinding to thickness should be processed first. An abrasive as coarse as #220 or its equivalent is usually necessary for the initial grind. The procedure after grinding with the first abrasive is the same as the slab glass procedure for grinding concave surfaces.

On the second side, grinding by hand, as when starting a concave curve in slab glass, may be necessary if the molded curvature has been entirely removed while grinding on the mills or if the remaining concavity is of insufficient aperture to permit spinning. When this second side can be spun, the procedure is the same as for grinding a concave surface on slab glass.

CHAPTER 8

ROUGH GRINDING LENSES WITH AUTOMATIC MACHINERY

	Page No.
Curve Generating Machines.	803
Grinding Tools.	803
Two Types and Methods of Making.	803
1. Sintered Method.	803
2. Serrated Method.	804
Size.	804
Determining the Effective Diameter.	805
Replacing a Lap.	805
Coolant or Lubricant.	807
Methods of Feeding Coolant.	807
1. Center Feed.	807
2. Skirt Feed.	807
3. Under Feed.	807
4. Indirect Feed.	807
Grinding.	807
Grinding to Thickness.	807
Fineness of Grinding.	808
Grinding One Lens Blank at a Time.	810
Multiple Grinding.	810
Beveling.	810
Machines Produced by Various Manufacturers.	812
American Optical Company, M419.	812
Setting Up the Machine.	812
Offsetting the Head Laterally.	812
Setting the Angle of the Head.	812
Setting the Thickness Limits.	812
Adjusting Pressure.	812
Summary of Action of Machine During Operation.	815
Adjustments.	815
Speeds.	815
Trouble Shooting.	815

	Page No.
New Jersey Machine Corporation, Model 73G.	817
Description.	817
Universal Camera Corporation.	817
Description.	817
Setting Up the Machine.	817
General Operating Procedure.	817
Peck Optics, Model D5.	820
Mirakel Generator Company.	820
Bausch & Lomb Optical Company.	821
Operation.	821
Tools.	821
Lens Holders.	821
W.F. & John Barnes Company.	821

A faster method of grinding lens blanks than that described in Chapter 7, but employing the same principles, is by the use of a curve generating machine.

For grinding curved surfaces the upper spindle of the machine is set at an angle, whereas both upper and lower spindles are vertical when the machine is used on flatwork. (See Chapter 6, under "Curve Generating Machine.")

Lens blanks may be ground individually, or in multiple on a 'spot-blocking shell' (Appendix D). Whether the blanks are made from slab glass or from pressings, they are prepared for processing on the curve generator in the same manner as they are for rough grinding by hand, as described in Chapter 7.

CURVE GENERATING MACHINES

Grinding Tools

Two Types and Methods of Making.—Two types of grinding tools used on curve generating machines are the 'fixed-radius' type and the 'universal' type (see Figures 801 and 802). The fixed-radius type, as the name implies, can be used to grind one radius only, while the universal type can be used for a wide variety of radii by varying the angle of the upper spindle of the machine. Both types contain an abrasive element. These elements may vary in grit size, concentration, depth of diamond and type of bond.

Two methods of metal-bonding are discussed. Other common types of bond are resinoid, bakelite, rubber and vitreous. It is suggested that the manufacturers be consulted when further information on a particular type of tool or bonding is desired.

The two methods commonly used in the making of metal-bonded, diamond-surfaced abrasive elements are:

1. *Sintered Method.*—In this method, diamond grit is mixed with powdered metal and

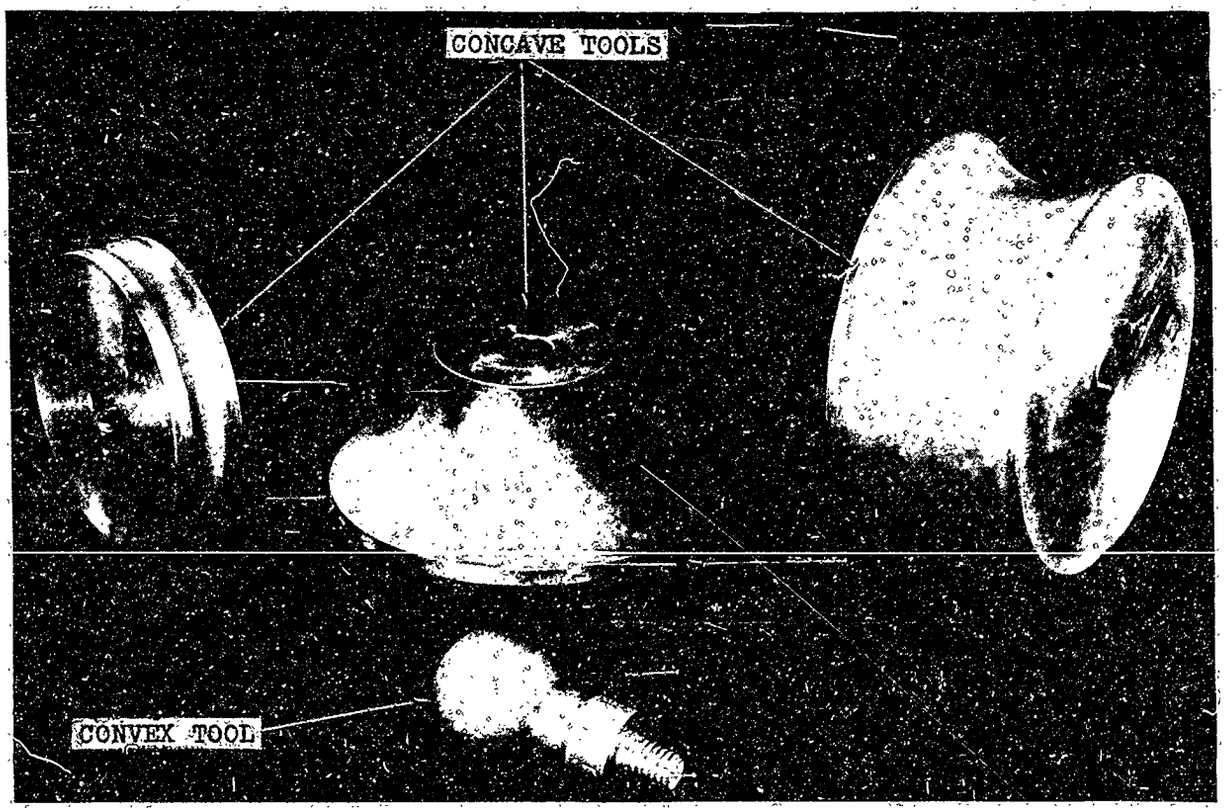

Bausch & Lomb Optical Company

Figure 801.—Fixed-radius Serrated Diamond Tools Used on Curve Generating Machine with Stationary Head.

compressed into the desired shape and thickness. Next it is placed under pressure in a hydrogen-atmosphere furnace, and heated to the temperature necessary to produce a coherent mass which becomes the abrasive element.

2. *Serrated Method.*—In the 'serrated' method the abrasive element is integral with the tool. A metal tool of the proper size and shape is grooved, or 'serrated', and the diamond is rolled into it. The finer grades of diamond may be forced into a copper ring without grooving.

Tools of the universal type invariably contain an abrasive element made by the 'sintered' method. Fixed-radius tools are usually made by the serrated method but may instead be made to mount a sintered abrasive element.

The diamond tool shown in Figures 802 and 803 is of the universal type. Its abrasive element, made by the sintered method, is permanently attached to the end of a hollow metal cylinder to form a unit called a 'lap'. The lap is soldered to an 'adapter' to form the complete tool. The lap may be replaced when its abrasive is worn away. Usually the adapter has an internal taper which fits the upper spindle of the machine and is mounted by driving it onto the spindle. However, with some types of curve generating machines a threaded connection is used.

When a universal type tool is used the surface quality of the pieces ground gradually improves as, by wear, the abrasive surface adapts itself to the correct curvature and broadens its contact with the glass beyond a mere 'line' contact.

Size.—The proper size diamond tool must be selected, giving consideration to the specifications for the lens to be ground and to the grinding conditions involved. The tool should be neither too small nor too large. The diameter of the tool should be no less than the chord from the center to the edge of the surface to be ground. If the diameter is less, the result is usually a 'zoning' effect, or inside bevel. On the other hand, if too large a tool is selected the head of the curve generator, when set, will be at an awkward angle.

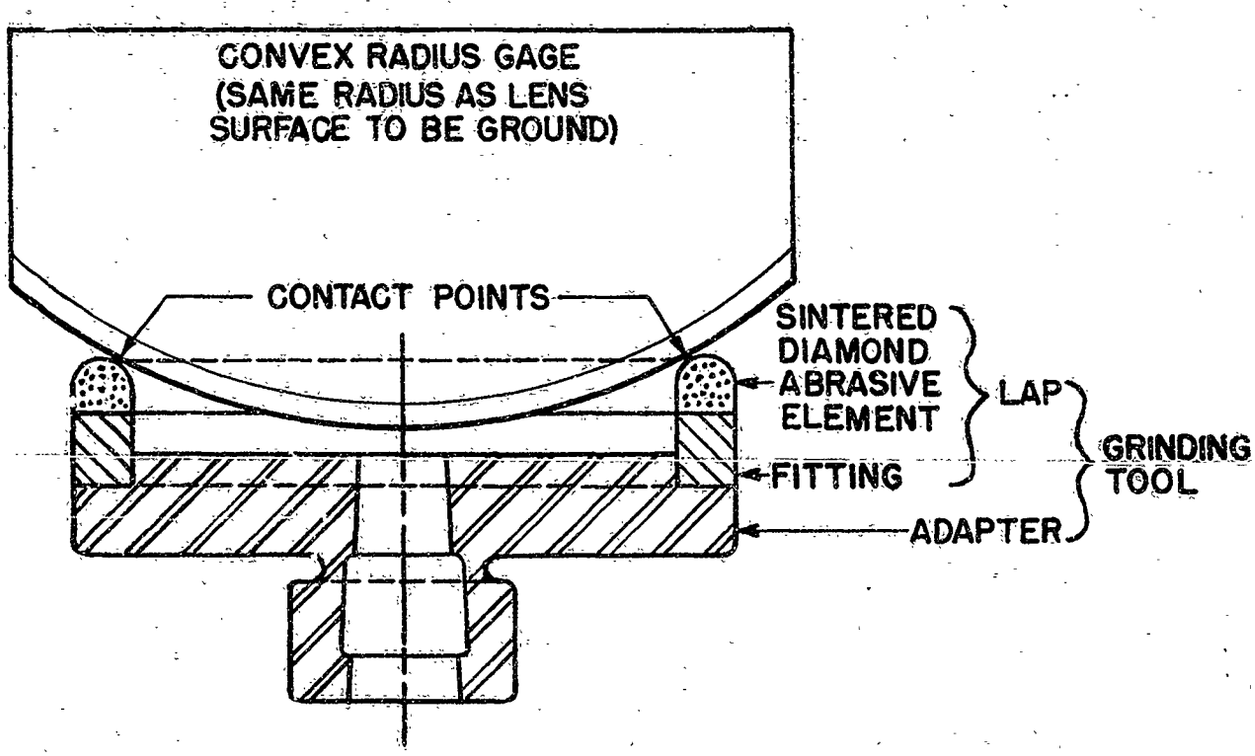

Figure 802.—Universal Type Grinding Tool, Showing Method of Determining Contact Points.

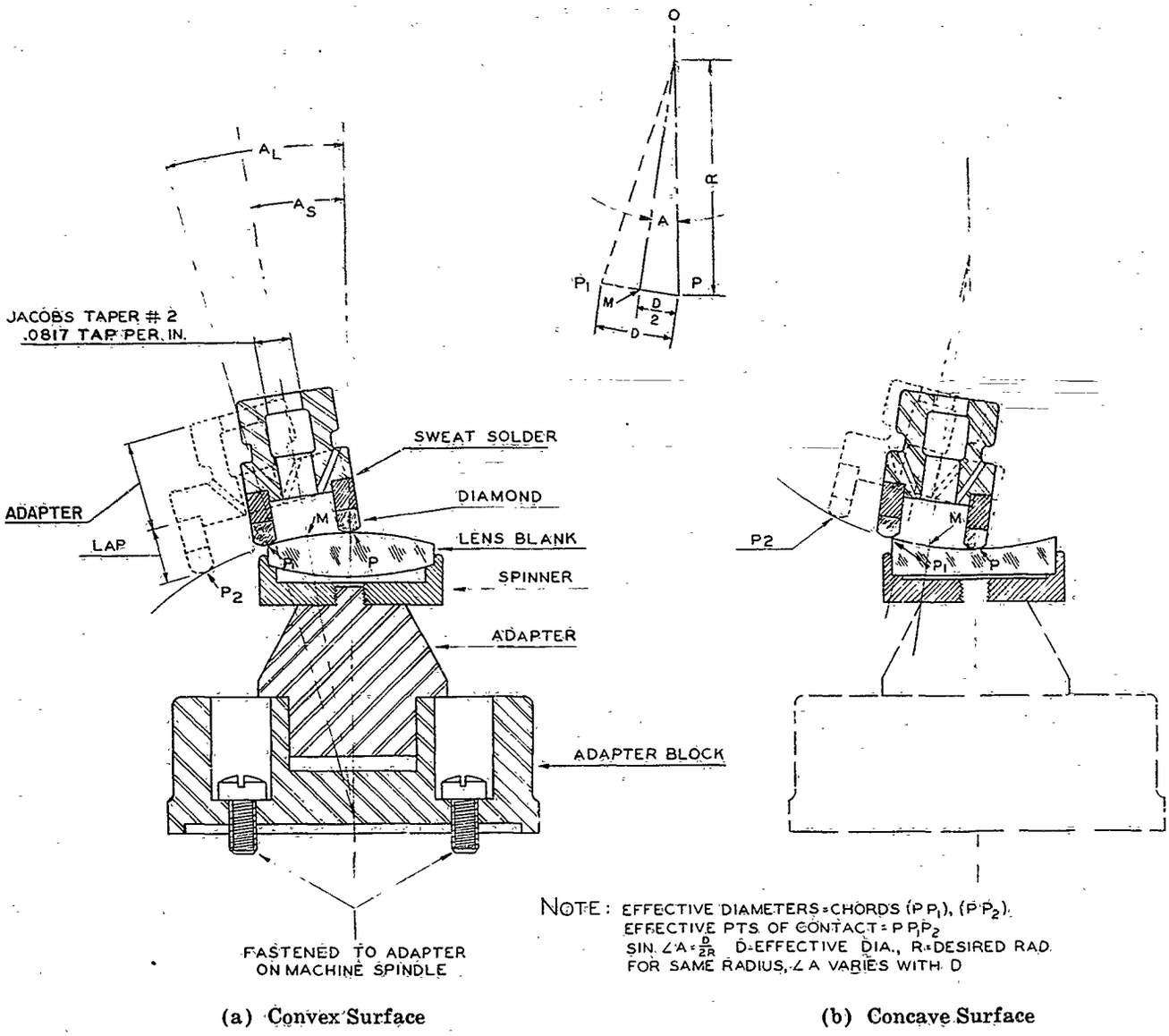

(a) Convex Surface

(b) Concave Surface

Figure 803.—Position of Tool for Grinding a Spherical Surface with a Curve Generating Machine.

Determining the Effective Diameter.—If a radius gage, opposite in curve to the one used in gaging the radius to be ground, is placed across the center of the tool the points of contact (Figure 802) show the effective cutting edge. The distance between these two points, measured across the center of the tool, is the effective diameter of the tool and should be used in calculating the setup. The point of the offset gage (Figure 804) should be set to the effective cutting edge of the tool.

When two or more tools of the same diameter are available each should be checked to gage, and the one having the greater contact with the gage should be selected.

Replacing a Lap.—To replace a lap such as is shown in Figure 802 the adapter is heated, the lap removed, and a new lap soldered on to the adapter. To insure an even fit of the lap and adapter the following steps are taken:

1. All old solder is wiped off the surfaces to be soldered.

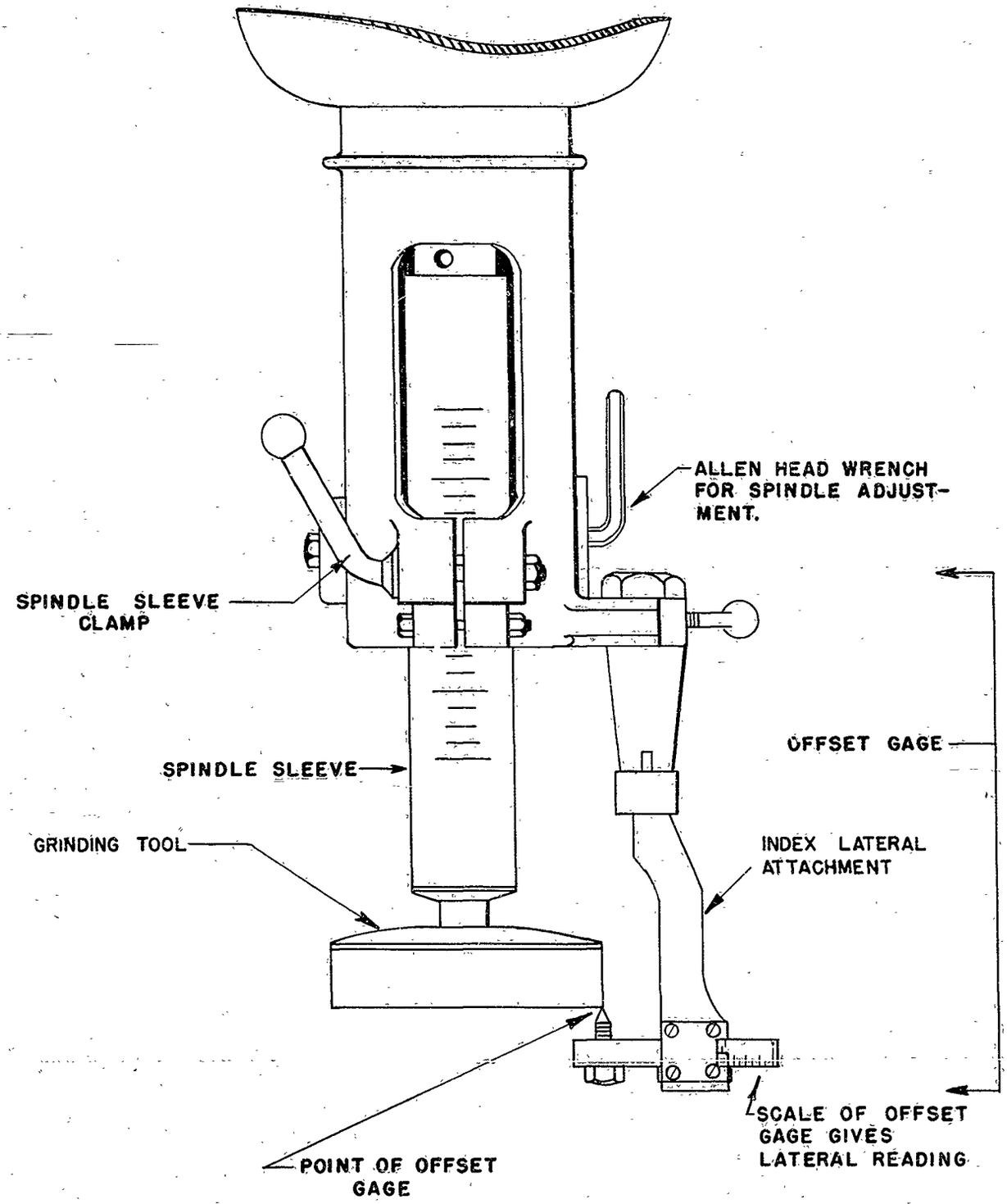

Figure 804.—Upper (Head) Spindle of American Optical Company Curve Generating Machine.

2. A small amount of soldering acid is applied to the surfaces to be soldered.

3. The lap is placed on the adapter.

4. A small amount of solder is applied around the crack between lap and adapter.

The taper shown in Figure 803 must be well cleaned to insure a concentric fit on the spindle.

Coolant or Lubricant

For general information on coolants and lubricants see Chapter 5, under "Coolant."

A table showing various oils with dilutions that have been used for coolants successfully is also given in Figure 2503. The dilutions given are approximate and should be used as a basis for making up satisfactory solutions. Local conditions which are seldom constant prevent the use of definite formulas for preparing coolants.

Methods of Feeding Coolant.—During the grinding operation, the cutting surface of the tool and the surface of the lens must be kept flooded with a coolant to keep the tool and lens cool, and to wash away worn abrasive and glass grindings.

Four methods, of applying the coolant are:

1. Center Feed.—The coolant is directed down through a hollow upper spindle onto the work.

2. Skirt Feed.—The coolant is fed through a tubing down one side of the upper spindle into the adapter of the diamond tool, thence from the inner side of the lap onto the work. The adapter resembles a turbine wheel in that it has a series of spiral vanes with openings at the bases of the vanes.

3. Under Feed.—The underfeed method is simple, and quite effective when the tool used extends beyond the edge of the work. A piece of metal tubing of the same diameter as the stationary tubing on the machine, shaped as the letter J, is attached to the stationary tubing by a rubber coupling. The tube extension and the flexibility of the coupling permit satisfactory direction of the coolant underneath and to the center of the tool.

4. Indirect Feed.—A tubing placed against the side of the upper spindle directs the coolant downward onto the work from the outside of the tool. This method is subject to the difficulty that the glass residue may 'load' the center of the tool, which in turn will cause heating of the lap and reduction of grinding efficiency.

Grinding

Grinding to Thickness.—The curve generating machine may be used to grind either or both surfaces of a lens blank where a considerable thickness of glass (0.020 inch and over) is to be removed. However, in these cases it is generally preferable first to bring the blank to within 0.005 inch to 0.010 inch of its final (curve generating operation) thickness by means of a surface grinder mounted with a rough or 'hogging' wheel. The life of the curve generating lap is thereby prolonged and production is increased.

The condition of the blank sometimes makes it preferable to grind the first surface on the generator, next to use a surface grinder on the second side to bring the blank to the approximate thickness desired, and then to return the blank to the generator for grinding the second surface.

For grinding to thickness, lens blanks are mounted on a blocking plate as described in Chapter 7, with the ground side held down with beeswax or stickum. Blanks are ground to thickness either by machine as described in Chapter 5, or by hand as described in Chapter 7.

The amount of excess thickness that should remain on a lens blank after being ground on a curve generator depends upon the fineness of the surface produced by the tool. If they are to be ground with 'FFF' abrasive after coming off the generator, 0.015 to 0.020 inch of thickness is left to allow for grinding with that abrasive and for subsequent fine grinding and polishing.

Some operators prefer to bring the thickness down to within 0.010 to 0.015 inch of the final thickness.

For controlling the thickness of a block of lens blanks, concavities are sometimes milled in the second side of a few blanks that are to be mounted on the block. These concavities are milled out to within 0.002 inch (or slightly

more) of the finished thickness for this operation. The blanks with the concavities are distributed over the block and as the grinding operation proceeds the thickness is controlled by noting what remains of the concavities. Some operators prefer to grind concavities in the 'markers' mounted in blocks of flatwork.

A milling machine may be used to grind a concavity. Figure 805 shows a machine with automatic control and Figure 806 shows a hand-controlled machine.

The concavity of each lens may also be ground singly on a curve generator to the desired thickness.

Fineness of Grinding.—Tools with metal-bonded abrasive of 240 grit and up to 400 grit are used for producing fine surfaces. These grind more slowly than the metal-bonded 120-grit diamond abrasive used for general purposes.

Tools with resinoid-bonded diamond-abrasive elements are superior for any type of

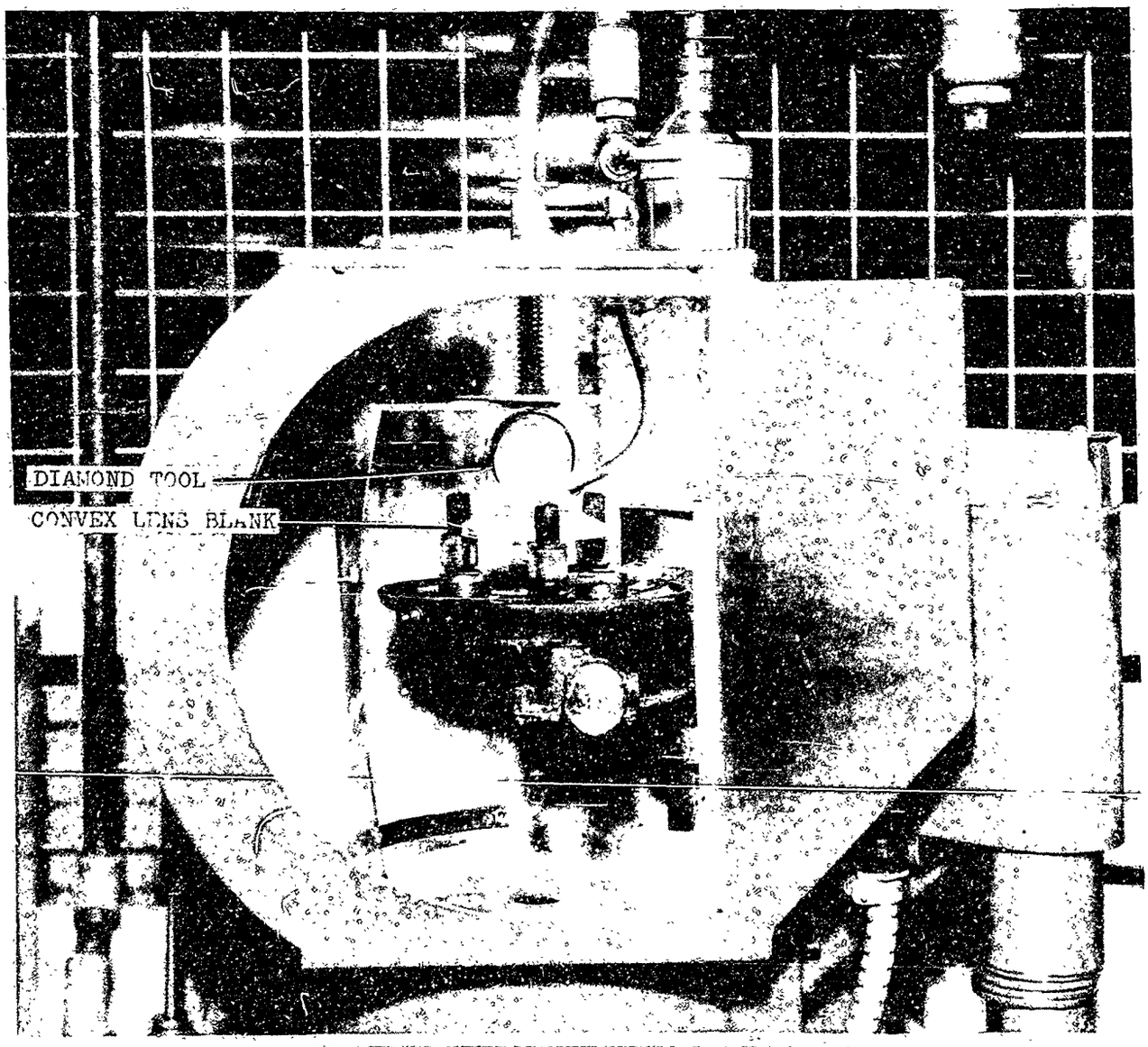

Bausch & Lomb Optical Company

Figure 805.—Automatic Milling Machine Setup for Spotting Thickness of a Lens Blank.

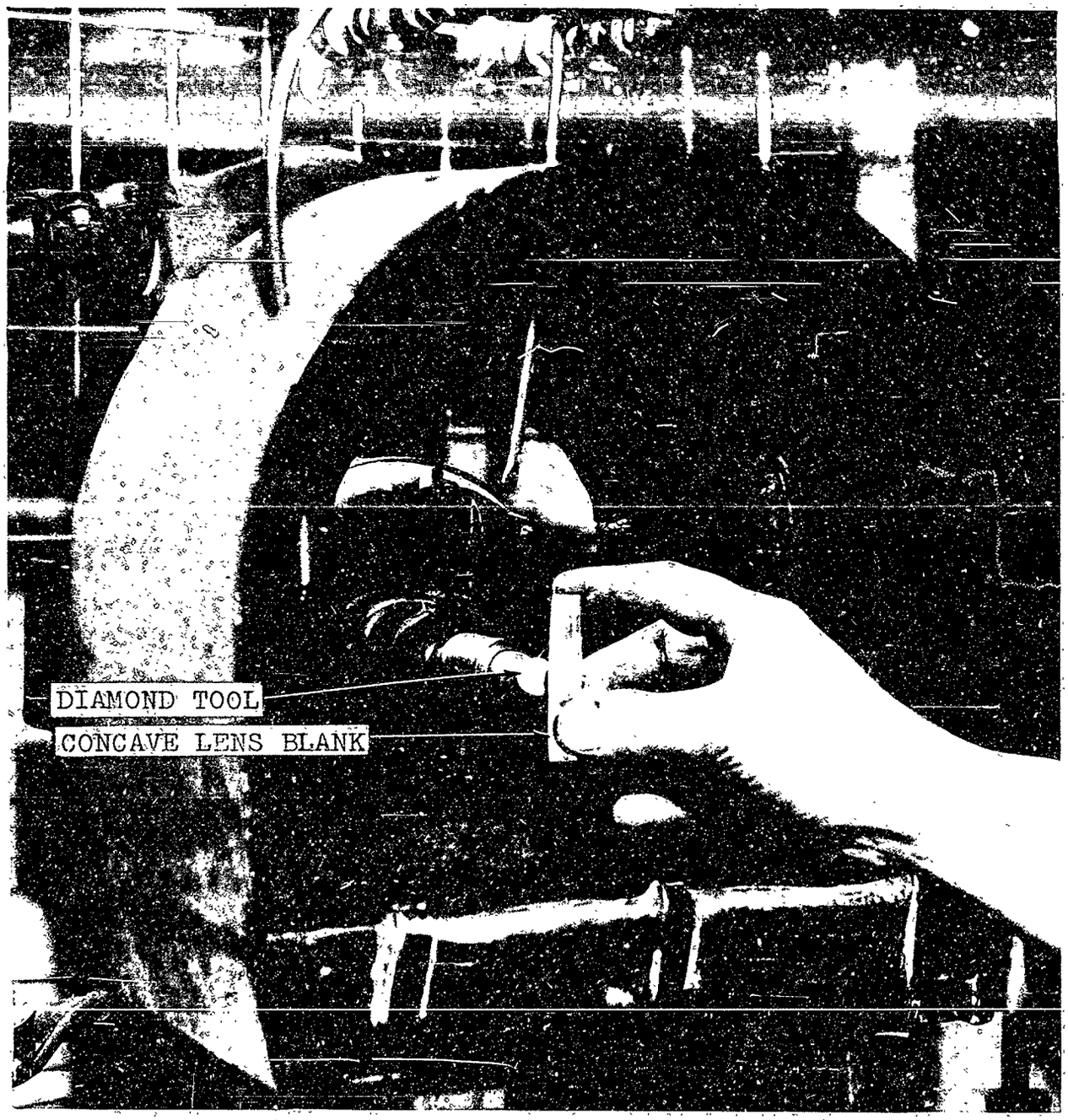

Bausch & Lomb Optical Company

Figure 806.—Hand Milling Machine Setup for Spotting Thickness of a Lens Blank.

fining work. A 320-grit, 100-concentration, resinoid-bonded abrasive is known to have given excellent results and lens blanks from this grinding have gone directly to polishing. A 240-grit, 100-concentration, resinoid-bonded abrasive gives good results but a coarser surface than the 320 grit.

Sometimes two or more generator cuts are made, each on a different machine. When this is done, the first cut might be made with a 120-grit, metal-bonded diamond abrasive, followed by a fine-grit, resinoid-bonded abrasive for the final surfacing.

After lens blanks have been ground individually on the generator a FFF grind, if required, is made as described in Chapter 7.

Grinding One Lens Blank at a Time.—When lens blanks are ground individually on the curve generator, a blank is placed in a spinner (Figure 803), which has a recess as close to the diameter of the blank as possible in order to prevent the blank from shifting. The spinner is screwed to a cone-shaped spinner 'adapter', which is held in place by a pin in the 'adapter block' engaging a slot in the adapter. Care must be taken that all attachments are cleaned before assembling to assure accurate work. Other methods of holding individual blanks may be employed such as a compression chuck or a suction chuck.

Multiple Grinding.—Multiple grinding is an aid to quantity production, but the quantity should be sufficient to compensate for the comparatively high initial cost of the spot-blocking shells in which the blanks are mounted. The shells must be designed carefully and made accurately. To make a lot of five to ten metal shells of medium diameter, each having about fourteen cavities, requires about 17 to 20 machine hours. These cavities can be made on a universal milling machine (as illustrated in Figure 807 for a shell of fewer cavities) equipped with a vertical milling head. The blanks are sealed in the cavities with wax. It should be noted that blanks can be mounted in spot-blocking shells either before or after they have been ground to thickness and whether or not either surface has been pre-beveled.

Plaster blocks are cheap, costing about 20 cents each, and have proven practical but they cannot be re-used as they must be broken up in order to remove the polished lenses. They can be used to advantage when the total number of a particular lens to be made is too small to justify making metal spot-blocking shells.

Before undertaking the manufacture of spot-blocking shells, the entire grinding and polishing procedure should be laid out carefully. Unless provision is made to bevel the lens blanks, either before they are mounted or after they are in place on the blocking shell, after rough grind it may be necessary to remove them from the shell and perform this operation. If the method of beveling before mounting is used, it is well to note two cautions. (1) If the drawing specifies a close tolerance for the bevel on the polished lens, this method may be unsatisfactory. (2) If the surface (of the blank) which faces toward the shell is concave then any variation in the initial bevel will affect the height in the block and consequently the final thickness.

Beveling.—The use of curve generators to bevel lens blanks has been covered in Chapter 6. Hand beveling methods were covered in Chapters 6 and 7.

Lens blanks rough ground on a blocking shell should be beveled before starting fine grinding and polishing in order to avoid sharp edges, small sections of which may break away and cause scratches.

As already stated, beveling before mounting may be unsatisfactory. On the other hand if the blanks are removed from the shell for beveling after rough grinding a later additional mounting operation is necessary.

One manufacturer avoids both of these difficulties by beveling the lens blank in place on the blocking shell. This is done by mounting the block on a bench and beveling each blank separately using a beveling tool chucked in a hand drill. The cup of the beveling tool is similar to the fixed-radius type of tool used to generate a spherical surface, except that the abrasive element is conical and consists of a ring of 320-grit, metal-bond, 100-concentration, diamond abrasive ⅛-inch thick. The tool is equipped with a carefully centered shaft which insures that it runs true when mounted in the hand drill. The lap is dipped in water before

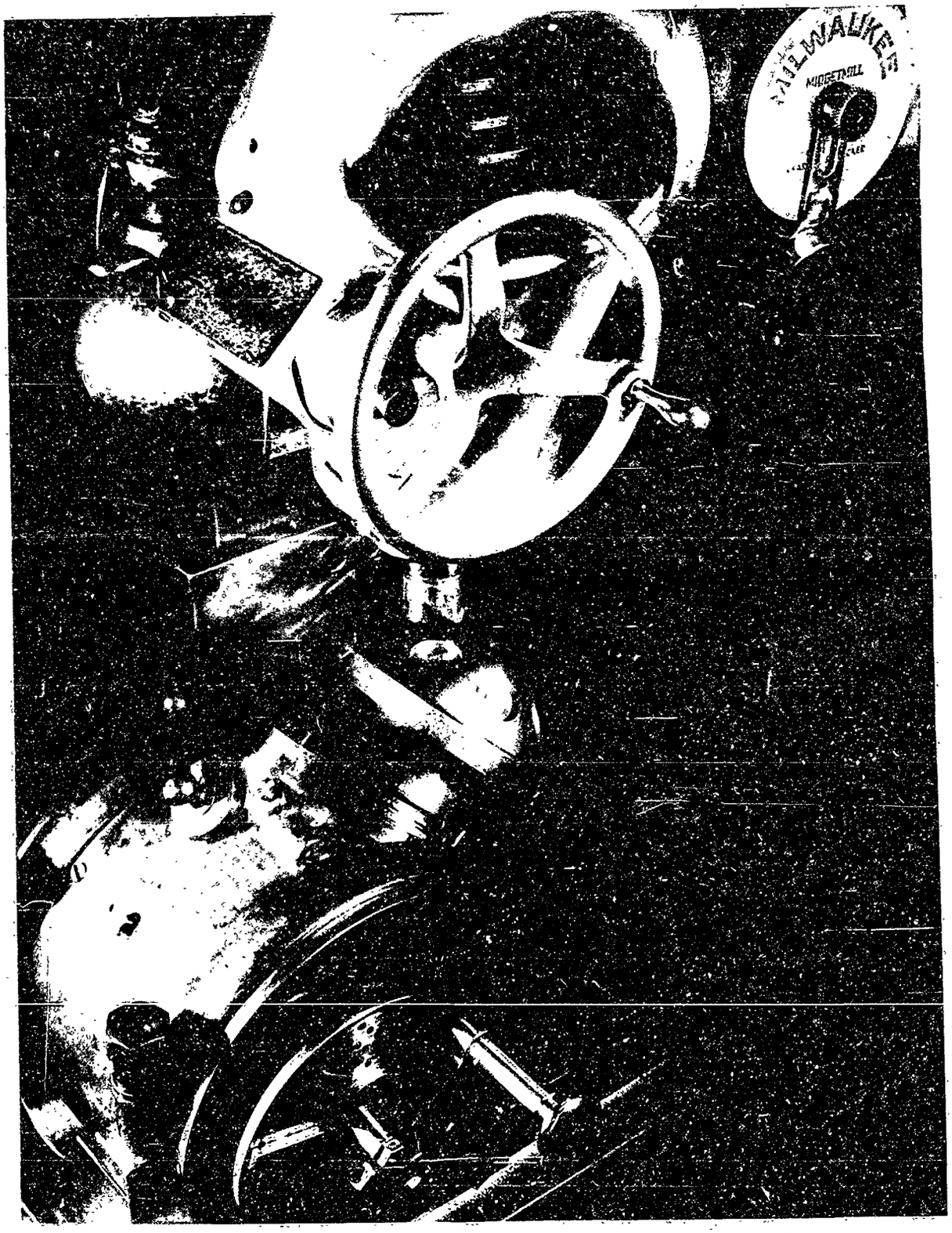

Universal Camera Corporation

Figure 807.—Milling Machine Setup for Recessing a Spot Blocking Shell.

grinding commences and three or four revolutions of the lap on each blank remove sufficient glass to permit safe polishing.

MACHINES PRODUCED BY VARIOUS MANUFACTURERS

American Optical Company, M419

The distinctive feature of the machine shown in Figures 808 and 809 is the gravity feed mechanism by which the work is fed to the tool.

Setting Up the Machine. *Offsetting the Head Laterally.* — After the proper tool has been selected, the amount of lateral offset for the head must be determined. There are two methods for doing this:

1. By formula:

$$\tfrac{1}{2}\,(\text{effective diameter of the tool} - \tfrac{1}{4}\text{ inch}) = \text{lateral offset} \qquad (9)$$

2. By reading the scale of the offset gage shown in Figure 804.

The point of the offset gage must be moved until it touches the effective grinding edge of the tool. To do this, it may be necessary to move either or both the upper spindle and the scale. The upper spindle is moved vertically by means of an 'allen head' wrench, after loosening the spindle-sleeve clamp. After the vertical position is set, the spindle sleeve is clamped firmly again with the spindle-sleeve clamp. The scale of the offset gage is moved horizontally by sliding it in the 'index lateral attachment' until the point of the gage touches the grinding edge of the tool. The lateral offset is then read on the scale. This check should be repeated frequently to correct for the wear of the tool.

After the lateral offset has been determined by either of the above methods, the head of the machine can be properly offset. The four head bolts shown in Figure 808 are loosened. The head is slid along the ways until the reading on the scale (Figure 808) corresponds with the reading taken on the scale (A in Figure 804) of the offset gage.

Setting the Angle of the Head.—The angle through which the head must be tilted may be computed by the following formula:

$$\frac{\text{lateral offset}}{\text{radius}} = \text{sine of angle of tilt} \qquad (10)$$

The head is tilted to the right of the vertical axis for a concave radius and to the left for a convex radius.

After loosening the handle shown in Figure 808, on the back of the swivel, the angle of the head is set on the 'vernier' scale by turning the hand wheel on the right hand side. The handle is again used for reclamping after the angle is set.

Setting the Thickness Limits. — The individual lens blank or block of blanks is brought up into contact with the tool by means of the 'weight arm' shown in Figure 809, which is adjusted by means of a 'clamp screw' and a 'jaw clutch' on the hub to a nearly horizontal position. The 'stop nuts' are then adjusted on the stud under the oil pan to allow the proper amount of grinding.

In the final adjustments the 'switch contact screw' is set to trip the 'micro switch'. The setting of this screw is synchronized with the stop-nut adjustment.

The setting of the contact screw causes the 'solenoid arm' to lift the weight arm which in turn lowers the block or lens blank from the tool and stops the grinding. The solenoid arm must be adjusted to such position that it will raise the weight arm when the solenoid operates.

The use of the 'micro switch' and 'solenoid' is to stop the grinding at the proper point by lowering the block from contact with the tool.

When the lens blank has been ground to thickness the weight arm is raised and brought forward by hand until the stud screw presses on the 'brake'. The brake, which acts only on the lower spindle, is thus forced down against the surface of the 'sheave', stopping the revolution of the lower spindle.

At approximately the same time that the brake is applied, the 'rod', the length of which is adjustable, acts on the micro-switches below it, and cuts off the power to both spindles.

Adjusting Pressure.—The 'weight' must be adjusted in or out on the weight arm according to the grinding to be done. The grinding efficiency is reduced when the weight is not

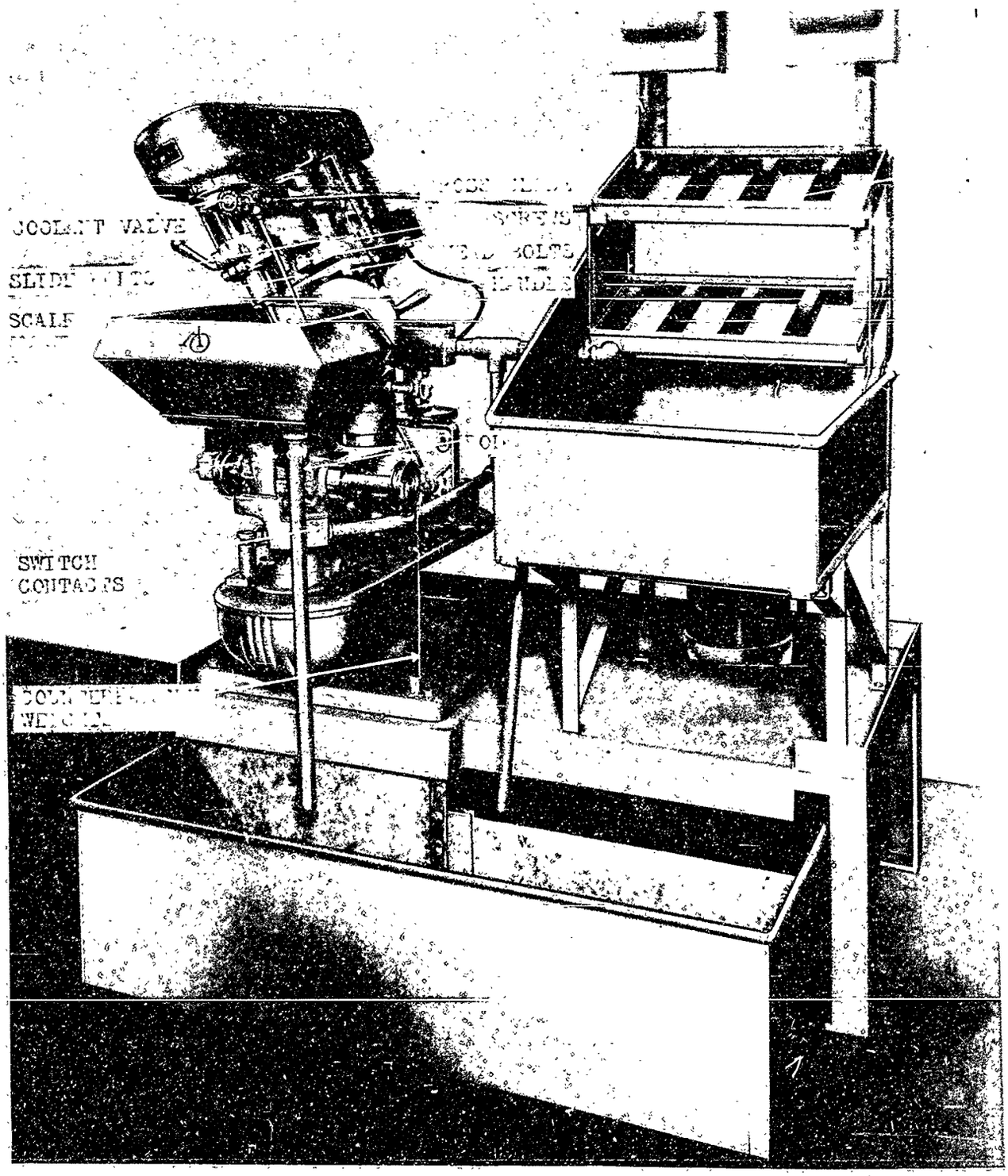

American Optical Company

Figure 808.—Front View of American Optical Company Curve Generating Machine, M419.

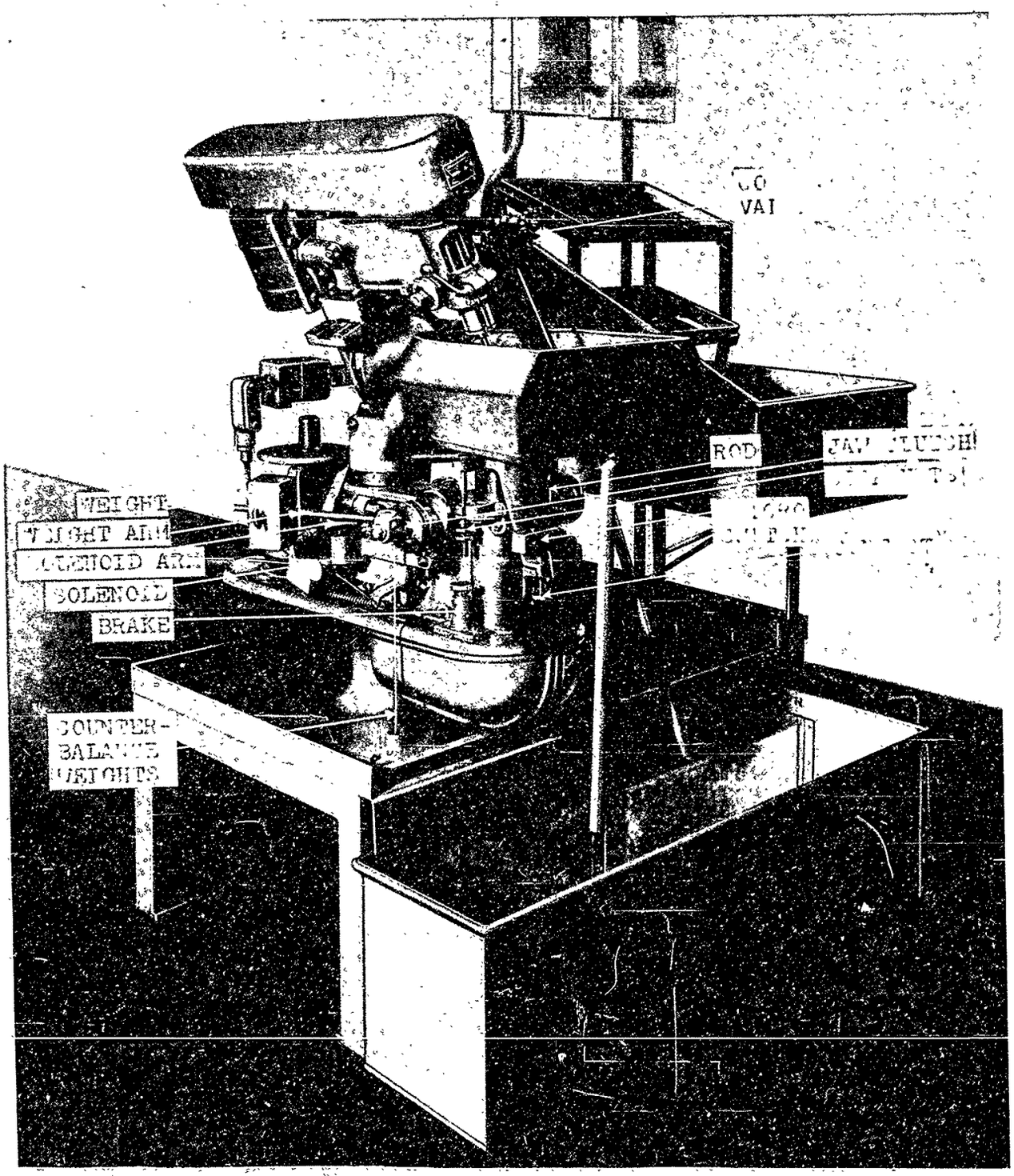

Figure 809.—Side View of American Optical Company Curve Generating Machine, M419.

sufficient to give the optimum rate of feed. Too great a pressure chips the edges of the lens blanks and loads the tool. When grinding starts, the pressure must be applied gradually by hand until the tool is cutting evenly over the surface of the work. The flow of coolant should be liberal, but not so excessive as to cause splashing.

Summary of Action of Machine During Operation.—An adapter, mounting a lens blank in a spinner, or a block of lens blanks is placed in position on the curve-generator adapter block (Figure 803) with its slot engaging the pin in the adapter block. When so mounting an adapter or a block, care must be taken that their bearing surfaces are clean and free from burrs and bruises in order to assure that the completed work will be of the proper thickness and not 'prismatic'. Setscrews in the adapter block may be tightened to a light contact with the block.

After the lens blank or block is placed in position, the 'weight arm' is lifted with the left hand and the 'coolant valve' is opened with the right hand simultaneously. The coolant flow, which may be either continuous or stopped after completion of the grind, should be directed so as to flow under the tool.

The 'switch contacts' shown in Figure 808 operate automatically, starting the motors when the pan is raised and stopping them when the pan has been returned again to its starting position.

The solenoid throw-out does not stop the spindles from revolving, but merely stops the grinding action by lowering the work from contact.

After the curve-generating operation, the work is placed in the 'drain pan' while a new lens blank or block of blanks is placed in the machine and the grinding is started again.

By following this procedure the machines may be in practically continuous operation.

Adjustments.—A 'cross slide' is provided for the purpose of correcting small errors in spindle alignment due to wear, etc. The spindles should be checked occasionally by setting the upper spindle at zero offset and zero angle with a plane lens surface and tool and then bringing the faces of both spindles in contact. In this position they can readily be checked for concentricity of their outside diameters. Adjustment may be made by means of the cross slide if the alignment is not correct.

The alignment also may be checked by noting the criss-cross patterns resulting after generating a plane surface and a surface of strong or sharp curvature. If the lines of the patterns do not pass through the centers of the surfaces, adjustment may be made by means of the cross slide to assure the generation of a true spherical curvature.

To correct any misalignment of the spindles, the 'slide bolts' shown in Figure 808, are loosened, the slide moved by means of 'screws', and the bolts again tightened. The 'counterbalance weights' should be just heavy enough to balance the lower spindle when the lens blank or block is not in place and the 'weight' shown in Figure 809 is removed from the 'weight arm'.

Speeds. — The second speed of the upper spindle may be used for tools up to 3 inches in diameter, third speed for tool diameters of 3 and 4 inches, and slow speed for tool diameters larger than 4 inches. The high speed should not be used for generating except for work having a small surface area requiring a tool diameter of about 1 inch.

The type of bond and the surface speed are related. A sintered diamond tool has been known to operate efficiently at 5000 surface feet per minute, while a serrated diamond tool gives the best results between 2500 and 3500 surface feet per minute. Using either type, the proper surface speed will be inversely proportional to the contact area.

For most work 3500 lineal surface feet per minute is considered satisfactory.

Trouble Shooting. — The setup of a curve generator or any change in a setup can be detected by the characteristics it gives to the blank during the grinding. A table showing the defects that occur most frequently together with their probable cause and some suggested methods for correcting them is given in Figure 810.

TROUBLE-SHOOTING TABLE FOR AMERICAN OPTICAL COMPANY CURVE GENERATING MACHINE, M419

DEFECT		CHECK	CAUSE	CORRECTION
1.	Nipple or teat	Setting on lateral and head spindle scales.	Lowest cutting edge of tool is not passing through center.	Increase or decrease lateral or head-spindle setting, or both.
2.	Groove	Bottom spindle belt and brake.	Lens is not rotating.	Repair belt if needed. Oil brake and expand releasing spring.
		Weight on feed arm and inside of spinner.		Decrease weight on feed arm. Alter spinner to give more bearing surface.
3.	Bronze or brass marks	Time required to grind sufficient bearing surface manually.	Weighted feed arm released too suddenly.	Increase manual feeding time.
		Tool for wear.	Tool worn out.	Replace worn out tool.
4.	Diamond marks (heavy)	Grit of tool.	Coarse-grit diamond tool.	Replace tool with one of finer grit.
		Weight on feed arm.	Excessive weight on feed arm.	Decrease feed weight.
		Cone pulley.	Spindle speed too slow.	Increase tool speed.
5.	Wedging	Rotation of lens blank.	Lens blank not rotating in a horizontal plane.	Remove cause of uneven rotation.
		Felt in spinner.	Worn or loosened felt.	Replace felt.
		Spinner for size.	Diameter of spinner too large.	Use spinner of a smaller diameter.
6.	Chips	Shape of blanks.	Irregular blanks.	Leave irregular blanks for more suitable spinner.
		Bearing surface between lens and spinner.	Small bearing surface.	Alter spinner to give more bearing surface. Insert felt base if necessary.
		Feed weight.	Excessive feed weight.	Decrease feed weight.
		Manual Release.	Manual release too sudden.	Increase manual releasing time.
7.	Irregular curve or spot	Rocking in spinner.	Lens is rocking on two points of contact with spinner. Center of spinner too high.	Insert felt washer in spinner so outer rim of blank rests on felt.
8.	Change of radius	Cutting edge of tool.	Tool has worn.	Change angle of head to get required radius.
		Setup.	Setup has moved.	Reset.
9.	Glass defects at or near surface	Possibility of grinding more thickness on poorest side.	Not grinding enough thickness to get below them.	Grind more glass from defective side, if possible.
10.	Sloping Walls	For prismatic effect after grinding first spherical surface.	Lens blank not rotating in a horizontal plane while first surface was ground.	Remove cause of uneven rotation.
11.	Inside bevel	Diameter of cutting edge of tool. Compare this with distance from center to edge of lens.	Diameter of cutting edge across tool is too small.	Replace with larger tool.

Figure 810.

New Jersey Machine Corporation, Model 73G

Description.—Basically this machine (Figure 811) is similar to the one described above. It is comprised of two drill-press heads, the vertical quills and spindles of which oppose each other. The lower of these two spindles is mounted normal to the machine base and is movable in a vertical direction only. The upper spindle is mounted on a slide along which it can be offset laterally as much as 4 inches. A scale is included to show the amount of offset. Both spindles have a '#2 jacobs' taper.

This machine can be used to grind a lens blank as large as 8 inches in diameter, and the maximum outside diameter of the tool that can be used is 4½ inches.

The upper spindle and its mount may be swung about the pivot at the base of the mount through an arc of approximately 60° to either side of the vertical. In all tilted positions the (projected) axis of the upper spindle intersects the (projected) axis of the lower spindle. When both spindles are vertical, the (projected) axes coincide. An angular scale is included for setting the angle of the upper spindle. The work to be ground is held on a spot-blocking shell affixed to and rotated by the lower spindle and is fed upward manually. The spindle speed is variable, ranging from 680 to 4600 rpm. The spindle speed to use on any job is the speed which will produce a surface speed, at the line of contact with the work, of approximately 3500 feet per minute.

Universal Camera Corporation

Description.—Curve generating is done inside the box-like structure of the machine shown in Figure 812 which is illuminated by a hermetically sealed electric light.

The top spindle is 1 inch in diameter and contains a ¼-inch diameter passage through which the coolant is pumped. The spindle is driven by a ¾-horsepower electric motor. The speed may be changed by adjusting the V-belt to the various grooves on the cone pulley.

The bottom spindle is operated at a constant speed of 600 rpm, and the feed-up is controlled hydraulically. The speed of the feed-up is regulated by a small needle valve, located on the intake side of the hydraulic cylinder, which governs the rate of oil flowing into the cylinder. The work block is held in the lower spindle by a foot-spring 'collet', which releases the block when the foot pedal is depressed. The purpose of the collet is only to hold the block. The actual bearing surface is a machined ring (approximately 4 inches in diameter) on the bottom of the blocking shell which rests on a like ring on top of the lower spindle.

The entire operation of this curve generator is controlled by a series of switches, easily accessible, on the left hand side of the machine.

The work block and the tool are brought into contact gradually, in order to avoid crushing the lens blanks. This is accomplished by alternately starting and stopping the machine until sufficient surface has been produced to permit continuous grinding. After continuous grinding starts, the power remains on until the necessary volume of glass has been removed when the machine is stopped automatically by a pre-determined thickness-setting on the lower spindle. All operations of this machine are motor driven except the up-feed of the lower spindle, which is hydraulic.

An added safety factor is the 'micro switch' on the front door. This switch controls the entire machine operation and cuts off all current from moving parts until the front door has been closed.

Curves can be generated on both flat and spherical surfaces on this machine and it will accommodate a lens blank or a work block, up to and including 8 inches in diameter.

Setting Up the Machine.—In setting up the machine for any given radius, the lower spindle is depressed to its lowest position and the upper spindle is raised to its highest position. The upper spindle then is swung on its secondary axis or pivot point to assume an angle with the lower spindle, and with its (projected) axis of rotation intersecting the axis of rotation (projected) of the lower spindle at the center of curvature of the lens blank.

General Operating Procedure.—The work affixed to the blocking shell is placed in the collet of the lower spindle. The upper spindle, bearing the diamond-abrasive tool, is depressed to a point pre-calculated to comply with the desired specifications. A mechanical stop is

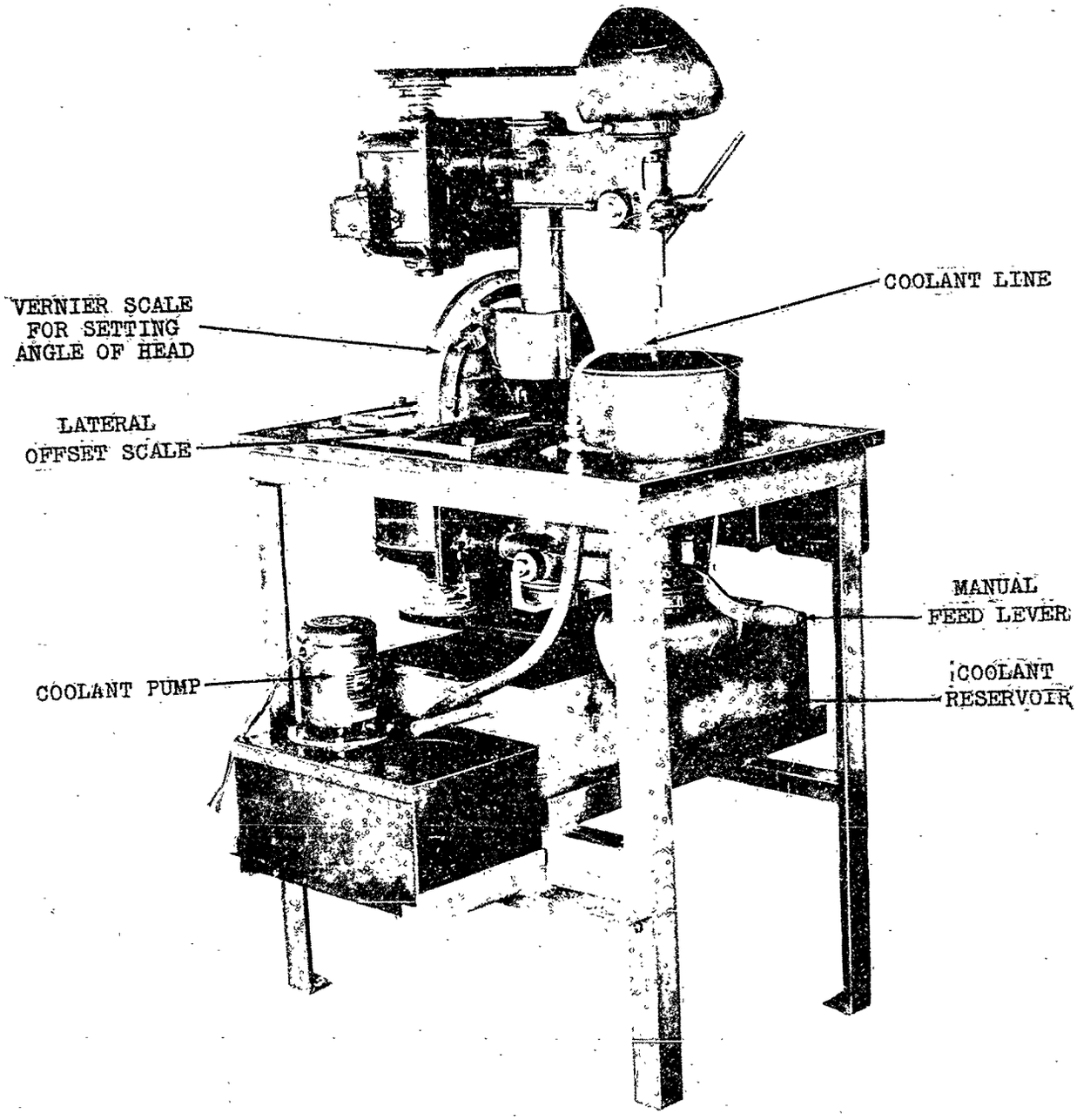

Universal Camera Corporation

Figure 811.—New Jersey Machine Company Curve Generating Machine.
(Model 73G)

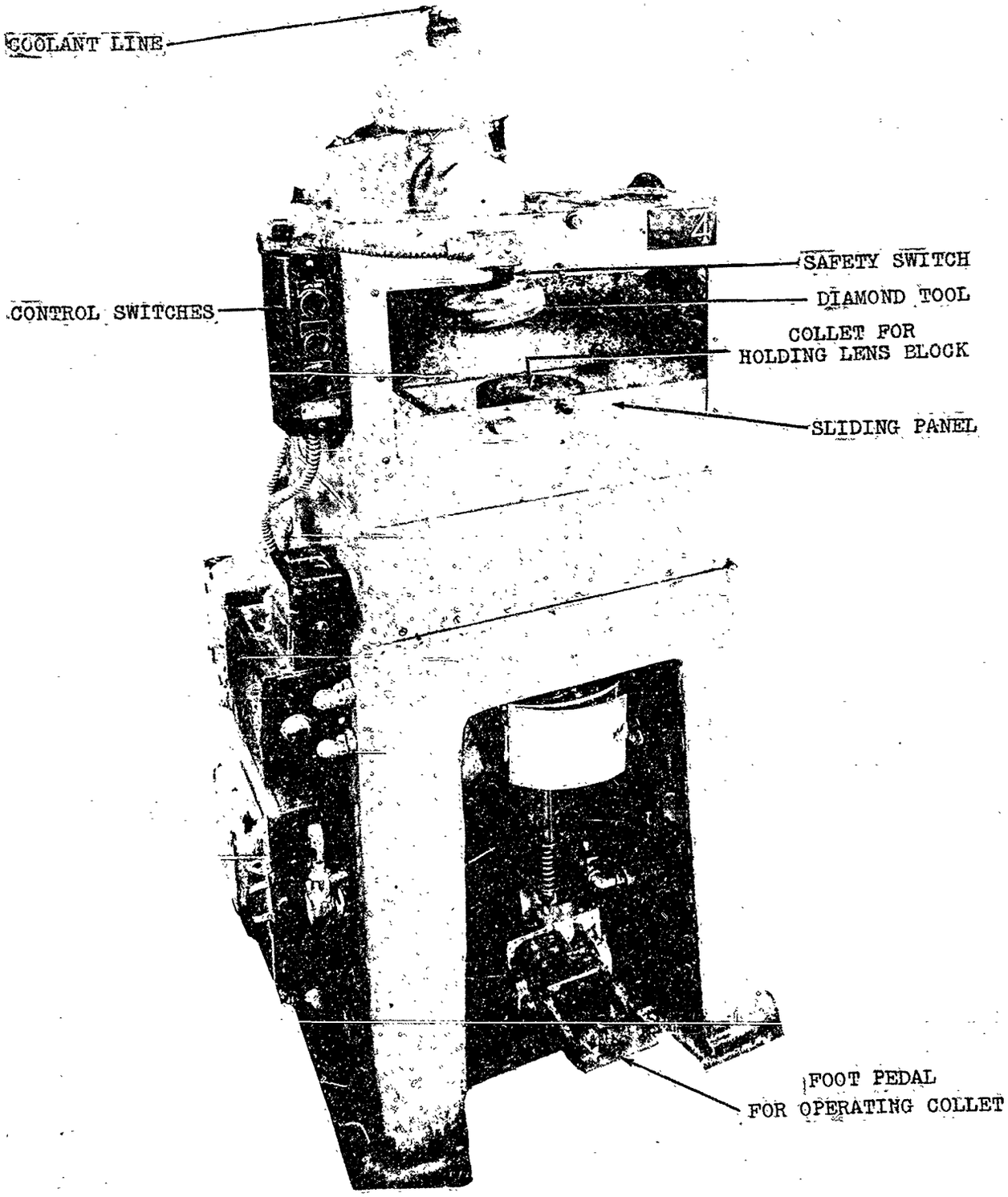

Universal Camera Corporation

Figure 812.—Universal Camera Corporation Curve Generating Machine.

provided so that this same setting may be attained in successive work cycles. The coolant is directed onto the work block, and motors driving both spindles are started and allowed to reach full speed. The lower spindle is then raised by means of a hydraulic system to bring the now rotating rough glass into contact with the 'diamond' cutting surface of the tool. The tool is allowed to grind the work until further upward movement of the lower spindle is restricted by the stop, which in turn causes oil to flow from the hydraulic cylinder thus lowering the block.

Peck Optics, Model D5

This machine, which is similar to those already described in this chapter and is shown in Figure 813, is designed to permit the upper spindle to be tilted to an angle of 50° from the vertical. This makes it possible to grind a hemispherical surface. The lateral setting is calibrated to $\frac{1}{64}$ inch and it is claimed that the thickness can be adjusted to 0.0005 inch. The speed of the diamond-abrasive tool can be varied from 3000 to 7000 surface feet per minute, so that the machine can be set for various grinding speeds.

Mirakel Generator Company

This machine, which is shown in Figure 814, is similar to those already described in this chapter. It is designed to operate with a diamond tool of any type and to take a block up to 12 inches in diameter. To set up the machine the top unit is moved forward or backward until the (projected) axes of the upper and lower spindles intersect at the center of curvature of the lens blank. The head is equipped with a worm and gear which provides a micrometer adjustment for setting the tilting angle. The hand wheel that controls this worm is located so that the operator can see the indicator on the calibrated arc and thus determine the tilt of the head. The machine is provided with an automatic and a hand-fed pilot wheel and has sixteen speeds varying from 160 to 8200 rpm.

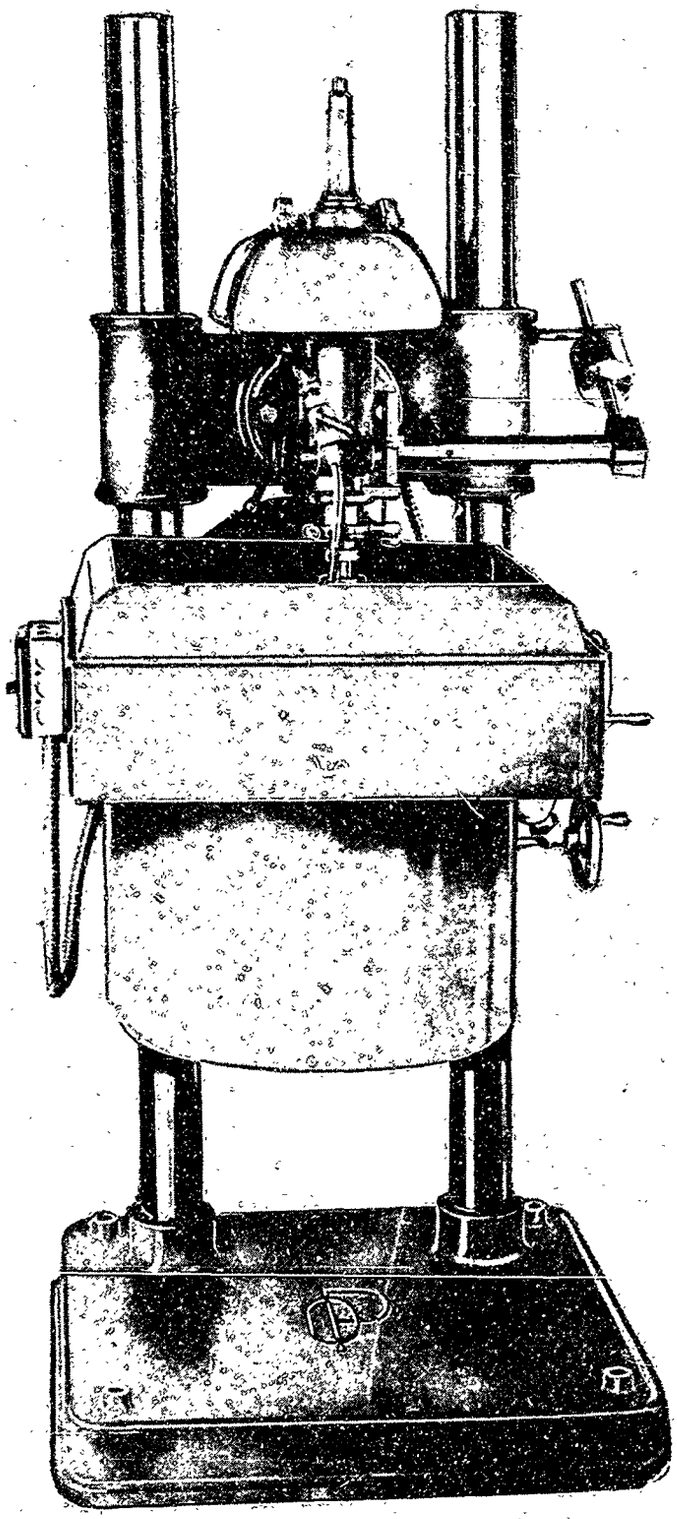

Peck Optics

Figure 813.—Peck Optics Curve Generating Machine. (Model D5)

Bausch & Lomb Optical Company

Operation.—This curve generating machine (shown in Figure 815), was developed by Bausch & Lomb Optical Company for milling a rough-ground surface on a lens blank, and uses a fixed-radius type tool. It operates on the same principles as other curve generating machines, but is less flexible. The head can be set at relatively few positions, and cannot be swung from left to right to permit the use of a universal-type tool.

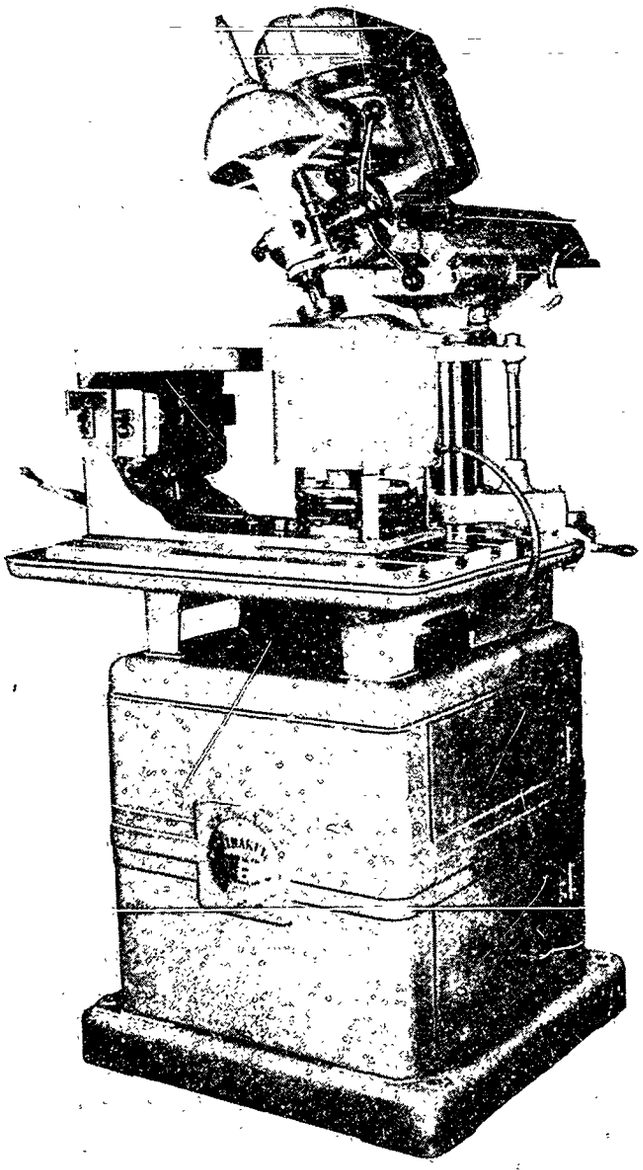

Mirakel Generator Company

Figure 814.—Mirakel Generator Company Curve Generating Machine.

Tools.—As a solid diamond-impregnated fixed-radius tool is used (see Figure 801) there is one tool for each lens radius. This is in contrast to the machines previously described, all of which use a universal-type tool which is positioned by adjusting the head of the machine according to the radius of curvature to be generated.

Lens Holders.—A different lens-blank holder (Figure 815), held in place by a spring chuck, is used for each different lens diameter.

W. F. & John Barnes Company

This machine differs from those described previously in the manner that is used for mounting the upper spindle. In the No. 4 Barnes generator (see Figure 816) the axle on which the upper spindle is rotated to produce the desired curvature is mounted on an adjustable link. This link provides the lateral setting for the upper spindle and is controlled by a worm and gear equipped with a micrometer adjustment on the worm. The angle of tilt of the upper spindle is controlled by a similar micrometer adjustment. Since the lateral setting follows the arc of a circle, any change in its adjustment will affect the tilt angle of the upper spindle, and therefore, it must be simultaneously corrected.

The machine is equipped with a vacuum pump and system arranged to hold single elements in position in the cup of the machine by means of a suction that is applied through the lower spindle. Also, it is provided with a hydraulic unit which raises the lower spindle in such a way that the blank is advanced towards the diamond lap rapidly to within $\frac{1}{32}$ inch. At this point, gravity feed takes hold until the completion of the grinding cycle, rising at a speed that is slow enough to reduce any tendency to chip the blank. The hydraulic unit then resumes control and draws the lower spindle down to the loading position.

After the machine has been adjusted, it is necessary merely to lay the blank in the cup and press the 'start' button. This will start

both spindles rotating, the coolant, the vacuum pump which holds the blank in the cup, raise the lower spindle to the generating position, fast for most of the up-stroke and slowly for the last $\frac{1}{32}$ inch of travel, grind the surface of the blank until it is the desired thickness, drop the lower spindle, and shut off the vacuum pump and coolant. When the machine has completed this cycle, it stops automatically.

The No. 5 Model of this machine, which was in process of development when this book was written, differs from the machine just described, in that the lateral motion is obtained by moving the head on straight ways, instead of in an arc. It also has incorporated in the mechanism an adjustable 'dwell' period after grinding, and the coolant is applied through the upper spindle to the center of the lap, thus increasing its life. The lower spindle rises and revolves on individual bearings, which should increase the length of accurate operation of the machine. The loading height has been lowered for the comfort of the operator.

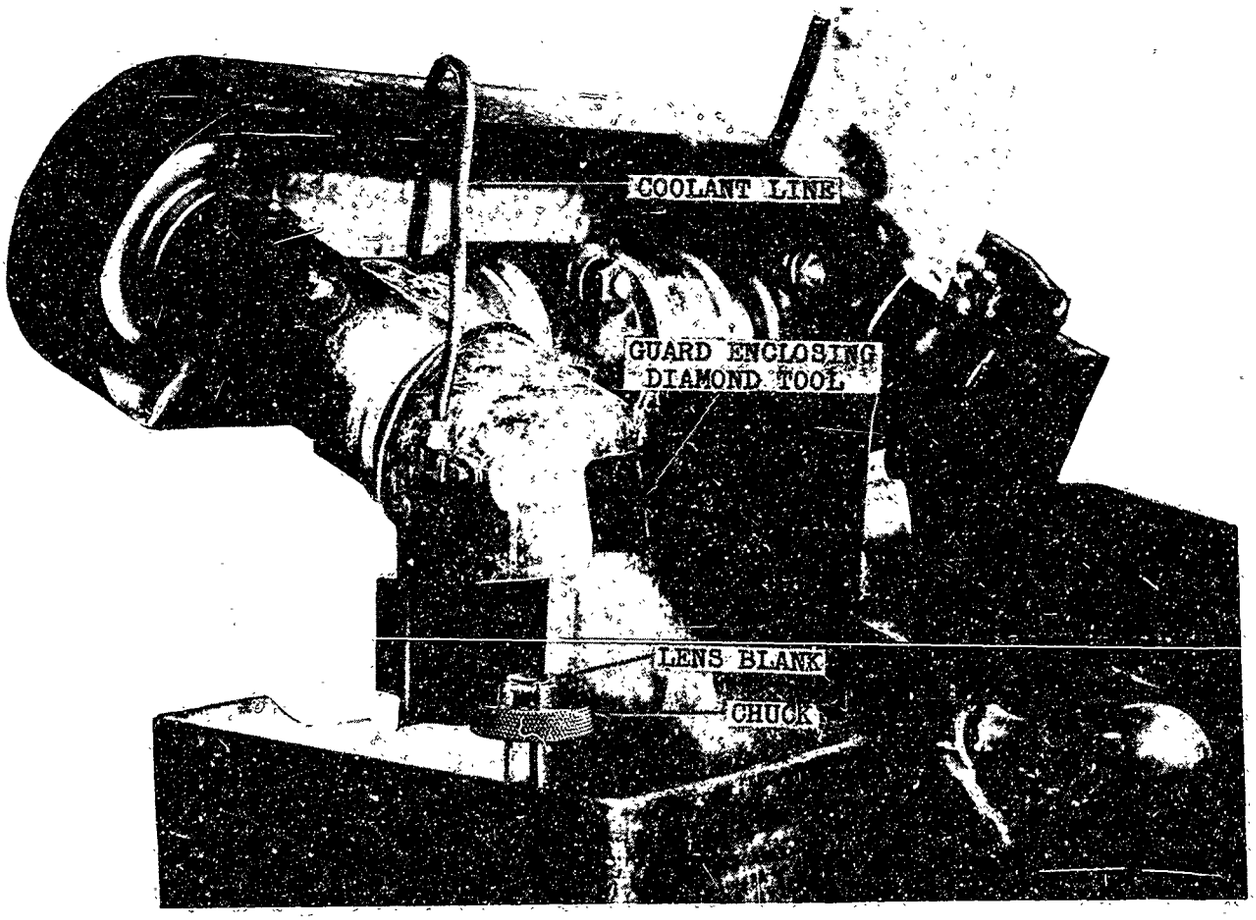

Bausch & Lomb Optical Company

Figure 815.—Bausch & Lomb Optical Company Curve Generating Machine with Stationary Head.

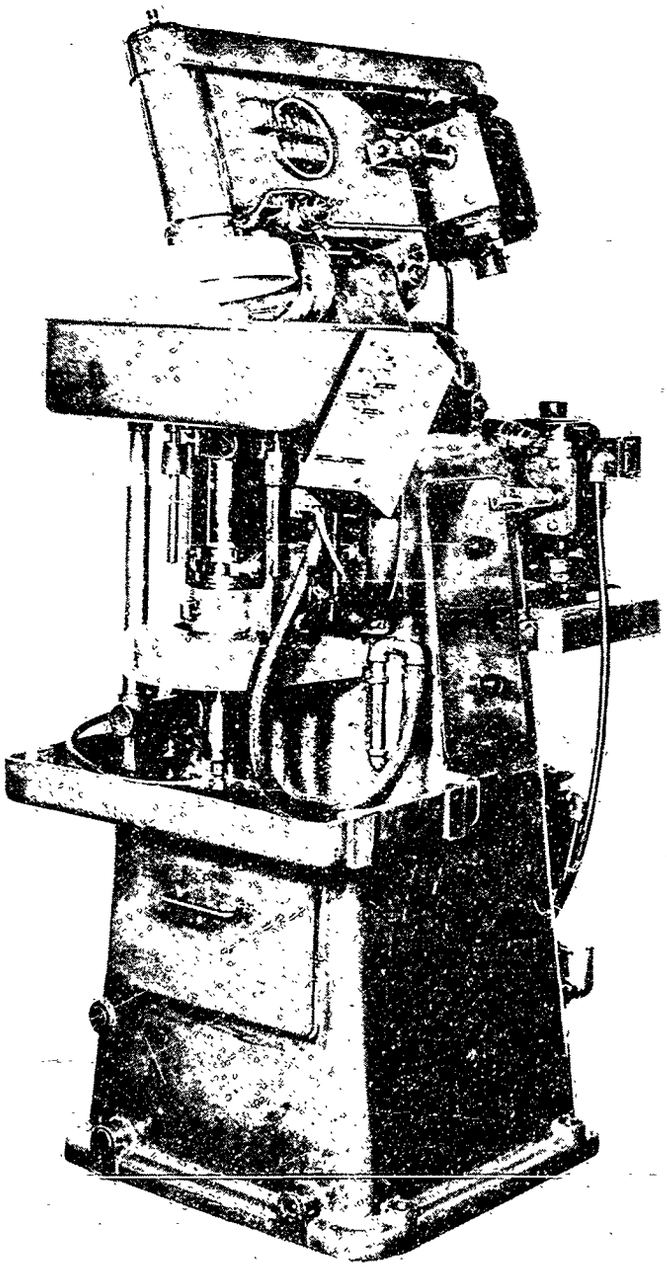

W. F. & John Barnes Company

Figure 816.—Barnes Curve Generating Machine. (Model No. 4)

CHAPTER 9

BLOCKING FLATWORK

	Page No.
Plaster Blocking.	903
Hot Method.	903
Waxing the Locating Plate.	903
Arrangement of Blanks.	904
If No Template Is Used.	904
Using a Template.	904
Application of Protective Coating.	904
Placing the Ring.	905
Pouring Cornstarch.	905
Preparation of Plaster of Paris.	905
Pouring Plaster of Paris.	905
Removing the Ring and Locating Plate.	906
Relieving the Block.	906
If Blocked in Plaster.	906
If Blocked with a Template.	906
If Blocked in Cornstarch and Plaster.	908
Setting the Plaster Block.	908
Coating the Plaster Block.	908
Removing Blanks After Polishing.	908
Cold Method.	908
Roof Prisms.	908
First Roof Face.	909
Second Roof Face.	910
Other than Roof Prisms.	910
Special Techniques.	910
Anchor Pieces.	910
Rosin, Beeswax and Cheesecloth.	910
Methods Used by Various Manufacturers.	911
The Perkin–Elmer Corporation.	911
Blocking with Wax and Plaster.	911
Locating Prism Blanks.	911
Pouring Wax and Plaster.	911
Relieving the Prism Block.	911

	Page No.
Optical Research, Incorporated.	911
Blocking with Soft-setting Plaster.	911
Ordnance Instrument Corporation.	913
Blocking Dove Prism Blanks with Plaster.	913
Stacking.	913
Locating.	913
Blocking Inclined Faces.	914
Blocking the Hypotenuse.	914
Research Enterprises Limited.	914
Blocking with Thin Plaster ('Kit' Method).	914
Blocking with Wax.	914
Mounting Prism Blanks (Eastman Kodak Company).	914
Waxed Paper and Paraffin Method.	914
Mounting Glass Plates.	916
Correcting the Blocking Plate Surface.	916
Preparing the Blocking Plate.	916
Mounting the Blanks.	916
Transferring Glass Plates.	917
Preparing the Transfer Plate.	918
Transferring the Blanks.	918

When flatwork, whether it be prisms or thick glass plates, is to be fine ground and polished, the blanks first are secured or 'blocked' so that all of the surfaces to be processed are held firmly in one plane. This practice permits processing many different surfaces at the same time. After one set of surfaces has been fine ground and polished, the blanks are removed from their holding fixture and other surfaces are blocked and worked in a similar manner.

The two general methods of securing flatwork are: (1) assembling in blocks, using plaster of paris as a bonding medium; and (2) mounting directly on an angle plate (see Eastman Kodak Company later in this chapter) or other metal fixtures which are described in Chapter 5. Method (1) is used for blocking prisms and *thick* glass plates. Method (2) is used for all types of flatwork. While the first method is the older one, the use of angle plates has grown as manufacturing methods have been developed for making them with sufficient accuracy. The discussion in this chapter assumes that the blanks require only fine grinding and polishing although, particularly when angle plates are used, improved methods of grinding as described in Chapter 5 make it possible to do rough grinding, as well as fine grinding and polishing, with one mounting.

In all cases the surfaces must be cleaned thoroughly, and those not being processed must be given a protective coat to prevent damaging or staining by the bonding medium. (See Figure 901.) This protective coating may be 'ceresin' wax, shellac, or a mixture of asphaltum varnish and 'xylol'. In the case of plaster blocks, this coating also assures better contact between the glass and the plaster.

Plaster blocking may be subdivided into 'hot' and 'cold' methods. Several variations of each method are described. In the hot method, the locating plate is heated in order to melt the adhesive used to hold the blanks in position. As this heating distorts the surface of the locating plate slightly, the cold method, which avoids the heating and consequent distortion, is used where the work must be of very great accuracy. However, it should be noted, that very expert operators will sometimes achieve greater production and still maintain accuracy, by using extremely flat locating plates and following the hot method for one or more of the faces requiring precision in grinding. The locating plate may be made of either iron or glass. When the work is to be extremely accurate, an extremely flat surface is prepared as described later in this chapter under Cold Method, and the degree of flatness is checked with an optical 'flat'. When less accuracy is required the surface is checked carefully with a straightedge.

Any warping of the plaster block which may occur when the hot method is used can be corrected by 'resetting' as described later in this chapter under Setting the Plaster Block. This correction is not needed nor used in the cold method.

PLASTER BLOCKING

Hot Method

Waxing the Locating Plate. — A locating plate is given a thin coat of a high grade ceresin

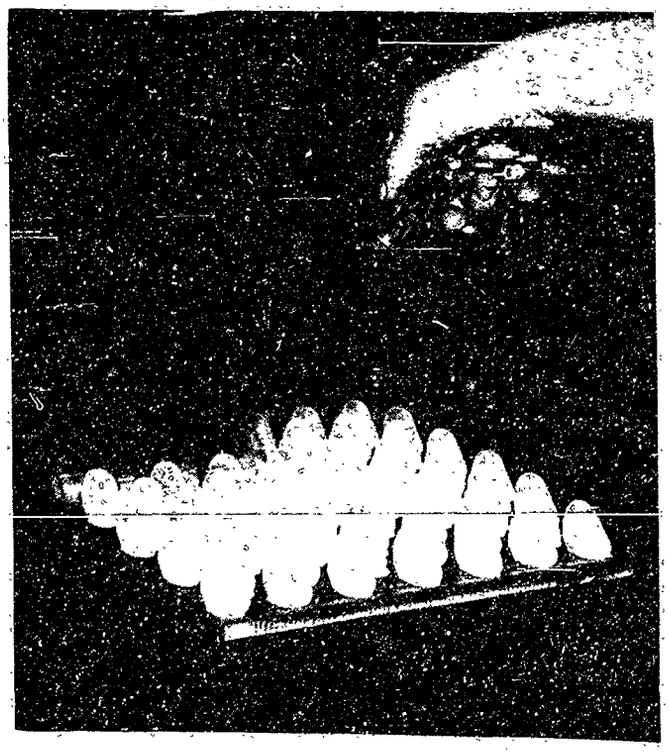

Univis Lens Company

Figure 901.—Spraying Exposed Surfaces of Prism Blanks with a Mixture of Standard Asphaltum Varnish Reduced with Xylol.

wax. The plate then is set on a tripod and heated with several bunsen burners until it is hot enough to melt the wax.

Arrangement of Blanks. *If No Template Is Used.*—The blanks to be processed are placed face down, pressed firmly on the waxed plate and slid into position (Figure 902), so that a suction is set up between the glass surface and the plate. The blanks should be arranged symmetrically on the plate (Figure 903) with no blank lying less than a quarter of an inch from the edge. Since no two types of optical glass have the same hardness or coefficient of expansion, it is unwise to place several types in the same block. To aid in obtaining optical flatness in the polished surfaces, all the blanks in a single block should be approximately the same size. Since the distorting effect of the heat of polishing varies with variations in size of the blanks, the blocking together of different sizes will result in some of the surfaces being convex and others concave by several 'bands' when tested with an optical flat.

Using a Template.—A simple and clean method of blocking flatwork for mass production is to use a template, about 0.038 inches thick, of cardboard which has been soaked in paraffin for waterproofing. The template is punched with holes arranged in the desired symmetrical pattern. Each hole has the same outline as the surface which it is to position. The template is placed in the wax on the locating plate and the blanks are inserted into the punched holes.

This method reduces the errors which inexperienced operators would otherwise make when positioning flatwork blanks on the locating plate. It also practically eliminates the relieving operation as it keeps the plaster the required distance from the lens blank surfaces to be processed (see Relieving the Block later in this chapter). However, it is not a suitable method for small-scale production.

Application of Protective Coating.—A thin coat of either ceresin wax or special lacquer is painted on, or a mixture of standard asphaltum varnish thinned with xylol is sprayed on to the surfaces of the blanks which will be in contact with the plaster. Shellac may be used as a protective coating in certain cases but it will permit stain to develop on the polished surface

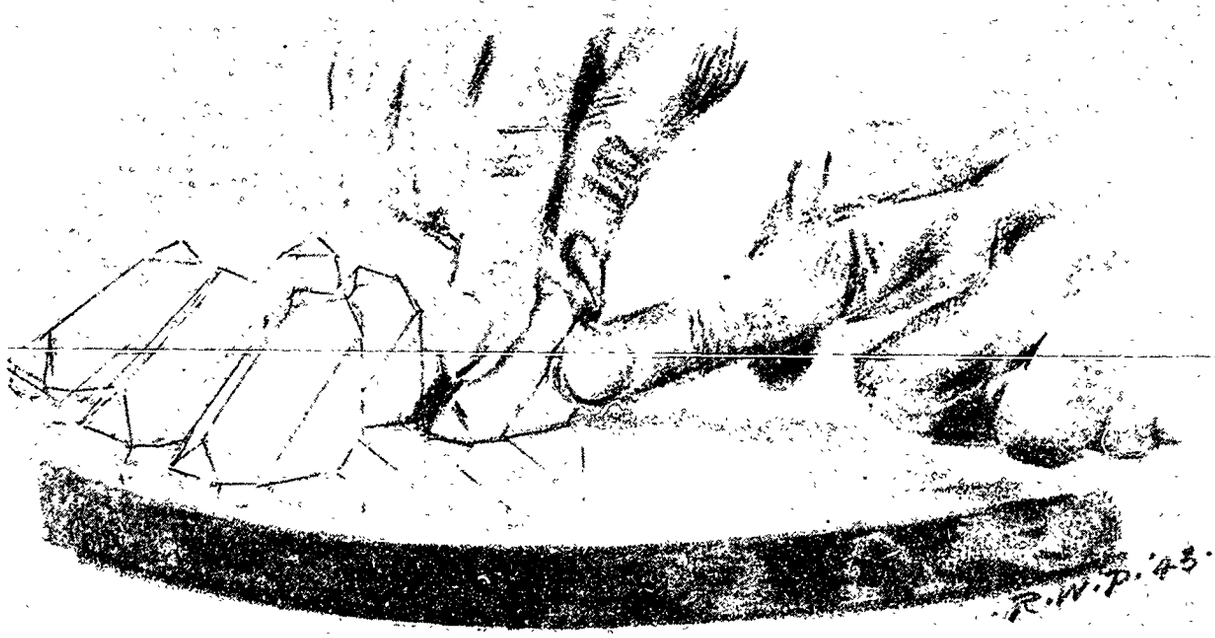

Drawing by Russell W. Porter

Figure 902.—Seating 90° Faces of Amici Prism Blanks on a Locating Plate.

of barium crown or dense flint glass. The special lacquer just mentioned has been developed at Frankford Arsenal and has proved helpful in eliminating stain on these types of glass. (See Chapter 25, *Materials*.)

Placing the Ring.—After the coating hardens, a split brass or sheet steel ring is placed on the locating plate, the plate and ring thus forming a mold. The crack between the plate and the ring and also the edges of the split in the ring are filled with putty to prevent leaks.

Pouring Cornstarch.—Under an improved technique, a layer of moderately thick 'cornstarch' paste of special composition is poured on the waxed locating plate after the blanks are in place. This is allowed to set before the plaster of paris is poured. This method has the great advantage of practically eliminating the relieving operation, described later in this chapter, by a means which is suitable for small-scale production. To prepare the above-mentioned special paste, the ingredients specified below should be mixed in the following quantities (or proportionate multiples thereof):

4 pounds of cornstarch,
3 pints of water, and
1 pint of a mixture of:
2500 cubic centimeters of alcohol, and
44 grams of 'aerosol OT'.

Preparation of Plaster of Paris.—The plaster must be smooth, creamy, and fluid enough to flow around the prisms and into any narrow crevices. Such a mixture can be made by sifting 17 parts of plaster of paris ('hydrocal' A–11) into seven parts of water, by weight, and allowing the mix to soak undisturbed for three minutes. Next the mixture is stirred and kneaded by hand or agitated with an electrically driven propeller for two minutes and allowed to set for five minutes more. Immediately before using, it should be agitated again for about half a minute. In this method of preparation, most of the expansion which occurs from the heat of reaction will be completed before the plaster comes into actual contact with the blanks. Consequently this method reduces trouble due to expansion of the plaster.

Pouring Plaster of Paris.—The mold is filled level with plaster and, after the plaster has set for five minutes, excess plaster is heaped on top. When the excess plaster starts to set, a perforated blocking plate is placed centrally on top of the mold and pressed down until plaster is squeezed up through the holes to the top of the perforated plate (see Figures 904 and 905). It is important to have sufficient plaster in the perforations to hold the plate and mold together.

Any excess plaster above the holes is removed and the plaster is allowed to set.

Both water and temperature affect the time and character of the setting. For example,

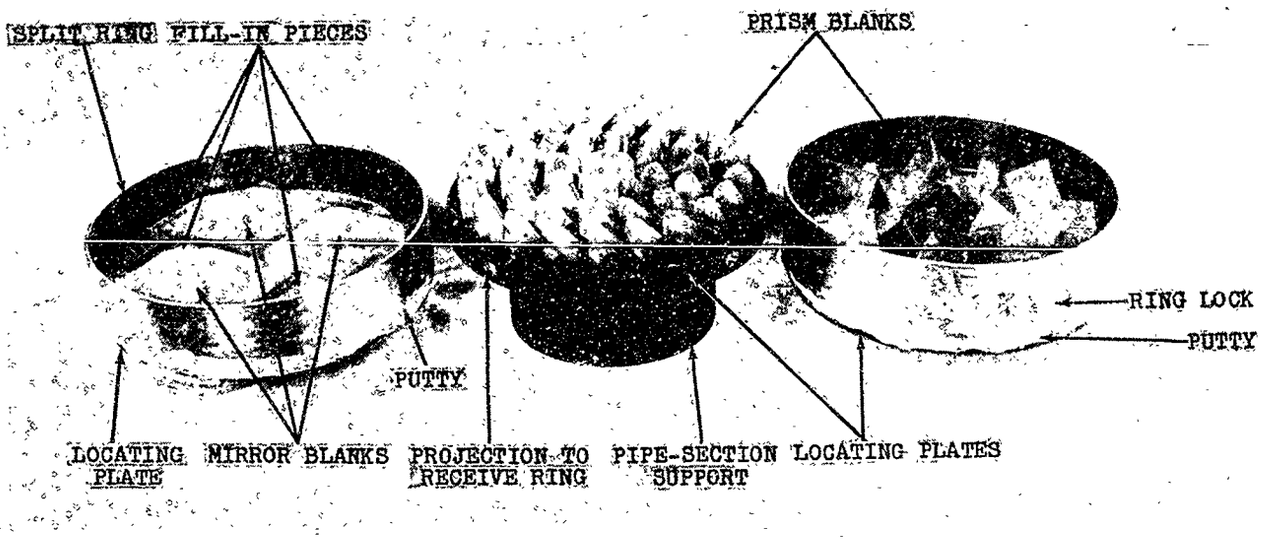

Figure 903.—Arrangement of Locating Plate, Ring, and Blanks Before Pouring Plaster of Paris.

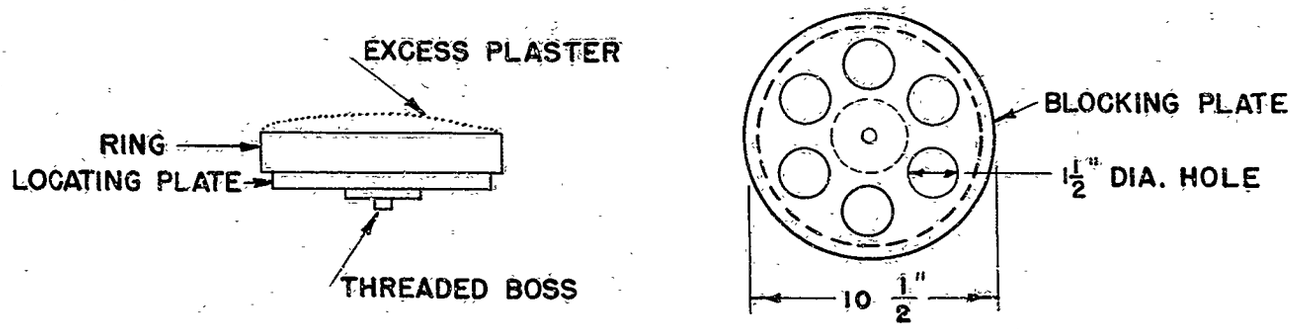

Figure 904.—Plaster Blocking Assembly After Pouring Plaster of Paris.

mineral salts in the water often have a bad effect, very cold water or sodium citrate retard the setting, and hot water or aluminum sulphate accelerate it. This plaster expands from 0.02 to 0.06 per cent in setting, with no succeeding contraction.

Removing the Ring and Locating Plate.—The mold is placed on a tripod, heated slightly with a bunsen burner to melt the wax, and the ring is removed. Next the plaster block is separated from the locating plate, with the aid of a light raw-hide mallet if necessary, and both the plate and the block of blanks are marked with the same identifying number so that they can be reunited later.

Relieving the Block.—There are several methods for relieving the surface of the block, some of which are discussed below:

If Blocked in Plaster.—If originally the plaster was poured directly on the waxed plate, the block is relieved by cutting back the hardened plaster, about 1/32 inch below the surface of each blank, with a knife or other sharp tool (Figures 906 and 907). This is a time-consuming operation.

If Blocked with a Template.—If a template was used in blocking, the template now is removed and the block is relieved by merely pulling off and scraping off any plaster that has seeped through the holes onto the surfaces.

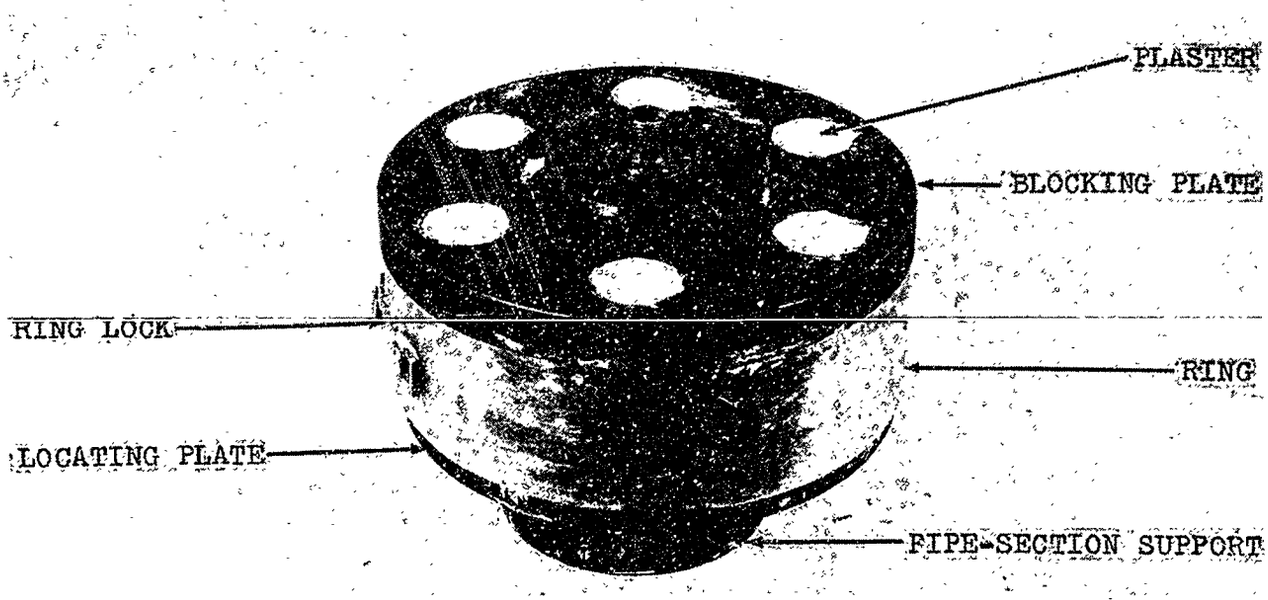

Figure 905.—Plaster Blocking Assembly with Locating Plate, Ring, and Blocking Plate in Place.

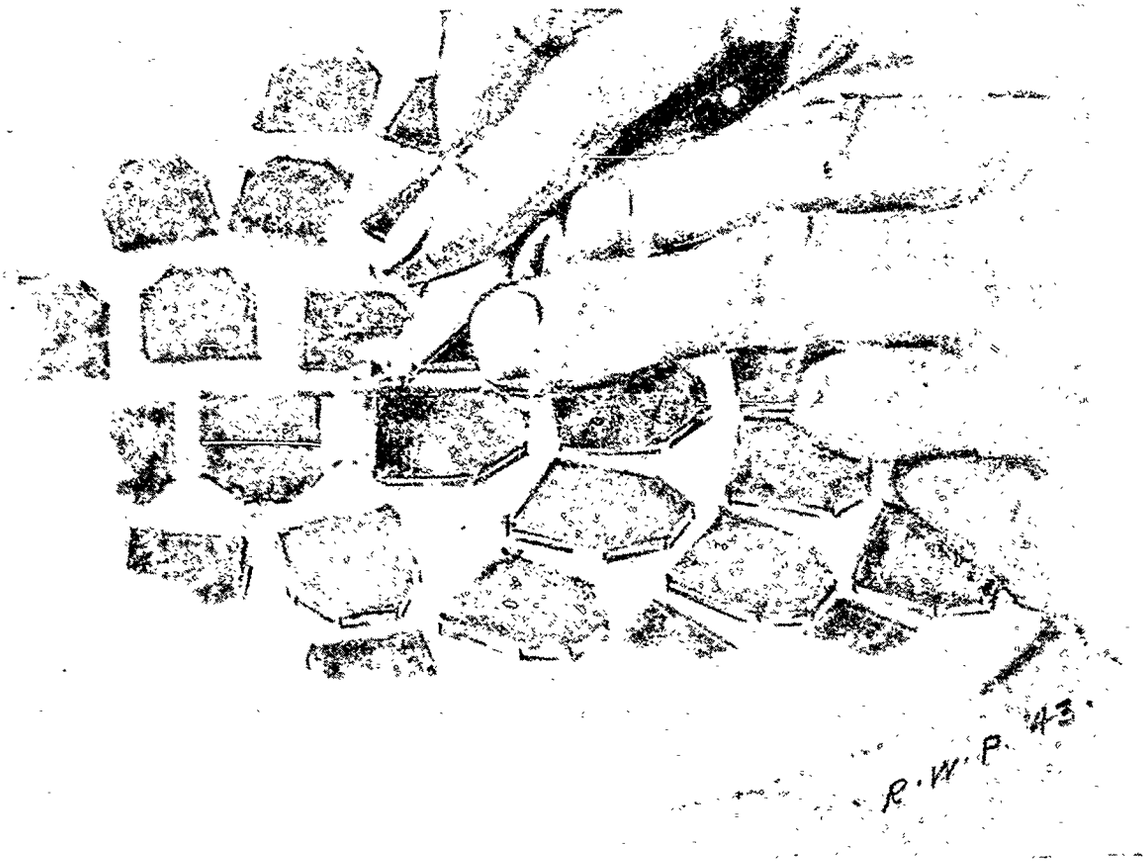

Drawing by Russell W. Porter

Figure 906.—Stroke and Finger Positions Used when Recessing Plaster from Prism Surfaces with a Knife.

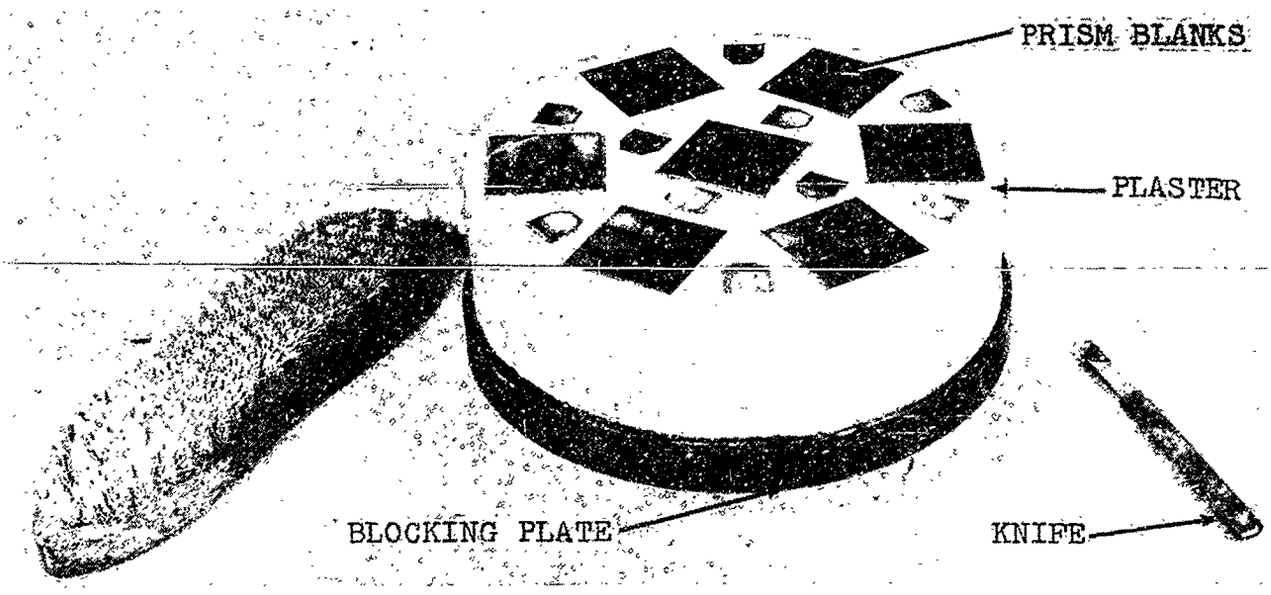

Figure 907.—Plaster Block After Relieving Prism Surfaces.

If Blocked in Cornstarch and Plaster.—If the method of pouring first cornstarch and then plaster is in use, the block now is relieved by removing the cornstarch with a stiff brush.

Setting the Plaster Block. — The locating plate is cleaned thoroughly with solvent, and then heated with bunsen burners to about 150° F., or sufficiently to melt the ceresin or other wax that has been applied to the blanks before the plaster was poured over them. After the plaster block has been relieved, it is placed face down on the locating plate that was used for mounting it and several twenty pound weights are placed on top in order to bring the surfaces of the blanks into close contact with the plate. The bunsen burners are removed but the heat stored in the locating plate will soften the ceresin and force any blanks that have become high to the surface of the block during the blocking operation deeper into the plaster until the surfaces of all of the blanks are in close contact with the locating plate. The block is left to harden for five to twelve hours.

Coating the Plaster Block.—A thin layer of nitro-cellulose lacquer is applied to the entire surface of the block, allowed to dry, and then a second coat is applied.

This coating restricts any loss or gain of water by the prism block and also furnishes a smooth surface which reduces the adherence of abrasive to the block during fine grinding. Moreover it later is cleaned easily from the glass surfaces with an acetone-moistened cloth wrapped around a wooden block. After being coated, the plaster block is ready for fine grinding and polishing.

Removing Blanks After Polishing. — The cast is loosened from the blocking plate by wedging a chisel between the plaster and the plate and striking it smartly with a raw-hide mallet. Any plaster remaining in the holes of the blocking plate is knocked out also. Next, the block is held in the 'cupped' left hand over a large sponge rubber mat or its equivalent and broken into several pieces by tapping it with the mallet. This will free some of the elements while others will remain imbedded in the pieces of plaster. To remove these remaining pieces, they are held face down in the palm of the hand and tapped carefully on the back with a wooden or metal mallet, Figure 908. If any of the prisms have been waxed together in subassemblies for plaster blocking, they are separated by immersing in hot water or by soaking, first in kerosene, then in alcohol. Shellac is removed by soaking in alcohol or in a dilute caustic bath, and other protective wax coatings are removed with xylol or a trichlorethylene degreaser. (See Chapter 23.)

Cold Method

Roof Prisms. — As previously stated, the cold method usually is used when a high degree of accuracy is required. For this reason, the two roof faces of roof-angle prisms and all of the surfaces of ocular prisms are usually cold-blocked for fine grinding and polishing. Special

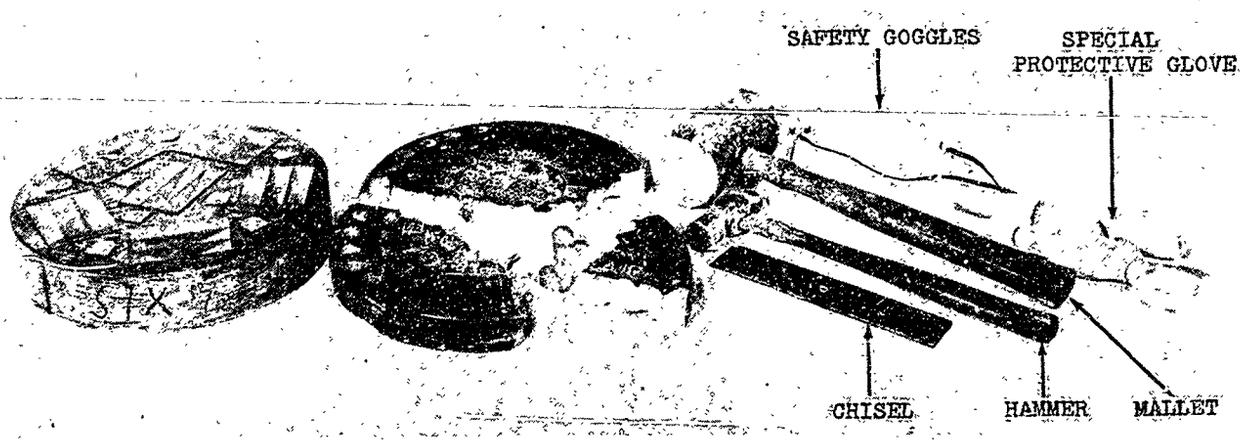

Figure 908.—Plaster Block Broken Apart to Remove Prisms After Polishing.

locating plates are used which have been lapped with #1600 abrasive and tested with an optical flat. This is because they must be smooth and flat to within one quarter of a wave length.

The locating plate is washed and cleaned thoroughly with solvent because the surfaces must be absolutely free from grit. This assures that the prism will adhere properly and the angle of the prism will not be changed while being fine ground.

First Roof Face.—When a roof face to be polished is placed on a flat plate, the adjoining roof face makes a right angle with the plane of the plate. Therefore two such prisms may be blocked together with the above-mentioned 'adjoining' roof face of one in contact with the 'adjoining' roof face of the other (Figure 910). The procedure is as follows: When the first roof face of a roof prism is to be polished by the cold method, each pair of prism blanks is pressed together and stuck down in light 'machine oil' (Figure 909) on a locating plate which is optically flat. Pairs of prism blanks are placed symmetrically on the plate (Figure 910) and all exposed surfaces are given a protective coating. After this the plaster block is

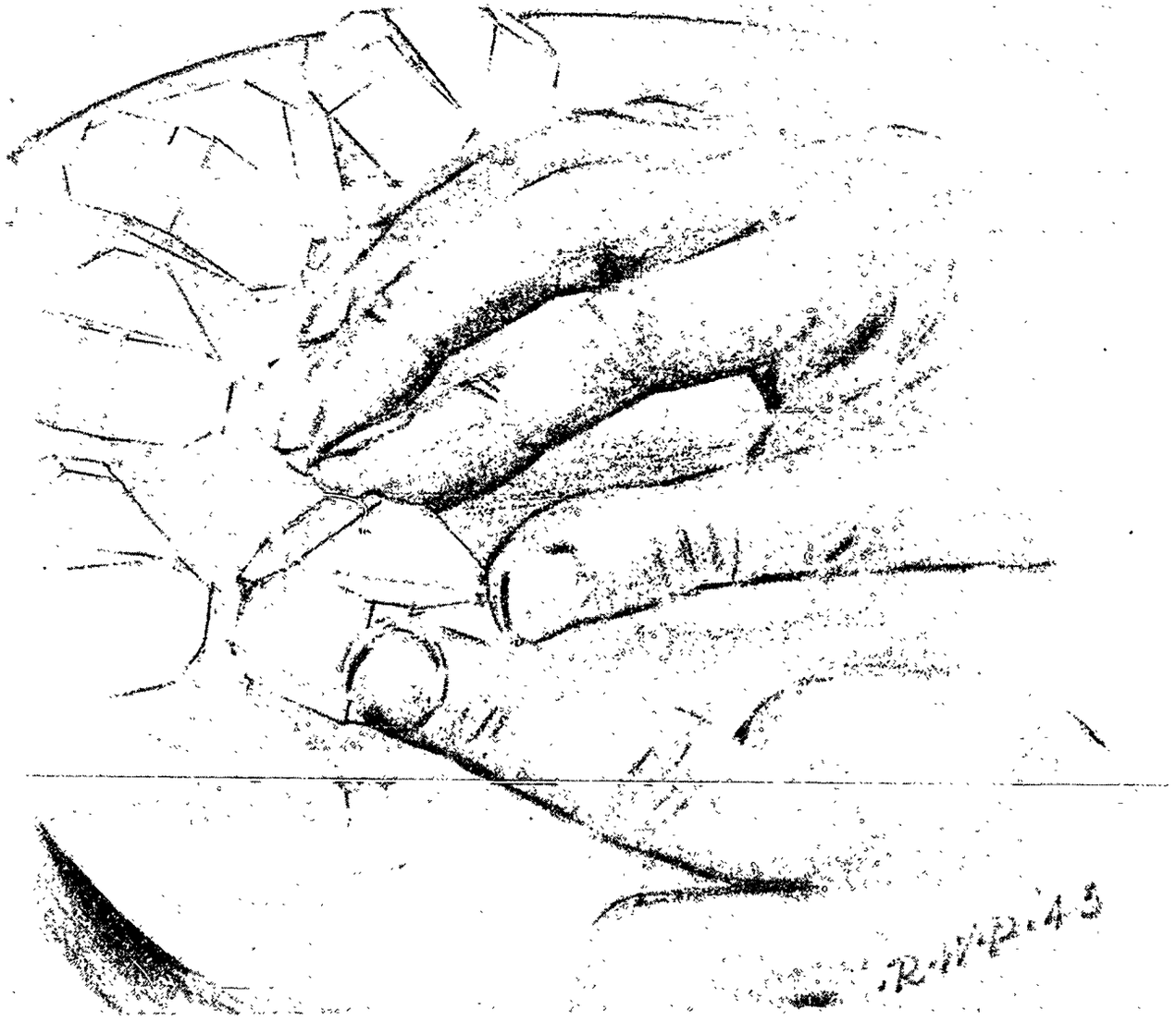

Drawing by Russell W. Porter

Figure 909.—Seating Roof Faces of Amici Prism Blanks on a Locating Plate.

made in the usual manner (but omitting any resetting by means of weights) and the surfaces are fine ground and polished.

Second Roof Face. — Before blocking the second roof face by the cold method preparatory to polishing, a 'cylinder' is hand-ground into this face so that it will create a suction when it is placed on the locating plate. (See Chapter 15.) The polished first roof faces of a pair of prisms are cleaned with alcohol, brushed with a camel's-hair brush, and then the pair of prisms are lined up on an optical flat. Next these two roof faces are contacted just to the point where wide interference 'bands' appear, since no advantage has been found in 'wringing' the roof faces into complete optical contact. The pair of prism blanks is contacted to the locating plate with oil. The suction created by the cylinder ground in the prism surfaces aids in holding the blanks in position. The exposed surfaces are given a protective coating, and are blocked in plaster of paris for fine grinding and polishing as already described.

Other than Roof Prisms.—When any face of any other type of prism is cold-blocked, the procedure as described above for roof faces is followed closely except that the prisms are not paired.

Special Techniques

Anchor Pieces.—'Anchor' pieces are used to build up a blank so that it will have a more effective area to which the plaster can adhere and thus enable the plaster to hold it more firmly. This method can be used with both the hot and cold methods of plaster blocking. It consists simply of attaching a piece of glass to any surface of the prism but preferably to a surface which is opposite to the surface to be processed. If desired, more than one anchor piece may be fastened to a single blank and any anchor piece may extend beyond the surface to which it is attached. In case the surface to which the anchor piece is to be attached is already polished, it will be necessary to polish the surface of the anchor piece also.

A method for attaching extra pieces of glass to a prism in order to keep it from rocking on the locating plate is discussed later in this chapter under Blocking Dove Prism Blanks with Plaster and should not be confused with the technique of using anchor pieces as described in the preceding paragraph.

Rosin, Beeswax and Cheesecloth.—An alternative method of 'anchoring' a block of prism blanks of the same kind and thickness, uses rosin, beeswax and cheesecloth. The method can only be used on a surface approximately parallel to the surface to be polished. A layer of rosin and beeswax is melted and spread on a heated blocking plate, and three or four layers of cheesecloth are pressed into the melted wax mixture until they are impregnated with it. The proportion of rosin to beeswax varies with

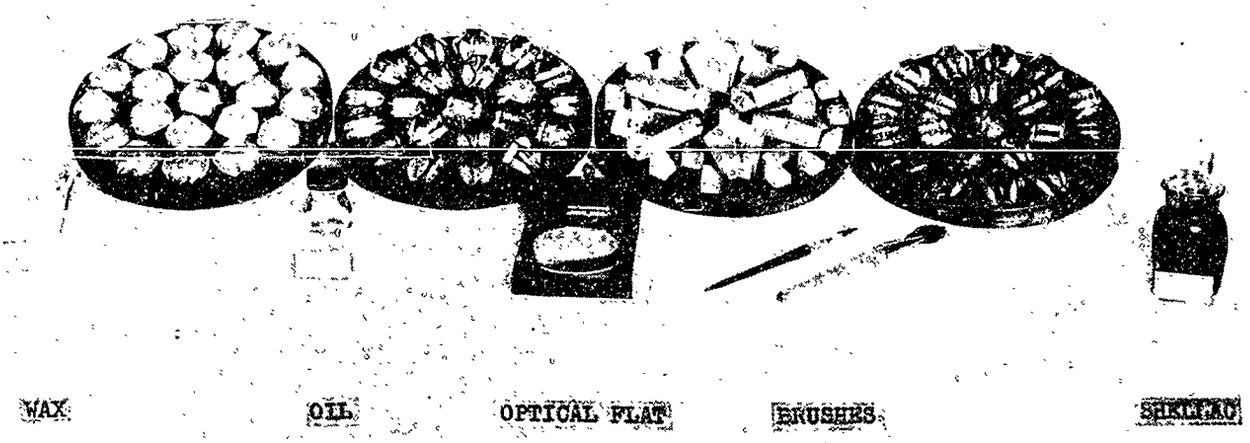

Figure 910.—Roof Prism Blanks Arranged on Locating Plates for Processing Roof Faces.

the surface to be processed but it is at least three parts of rosin to one part of beeswax.

After the prism blanks have been laid on the locating plate in a film of water, the blocking plate with rosin, beeswax, and cheesecloth is turned over and laid on top with enough pressure to secure good adhesion. Next the whole system is turned over, the locating plate removed and the crevices filled with plaster of paris.

This method lends support to the plaster for holding the prism blanks securely, because the cheesecloth takes up any inequalities in the varying heights of the blanks and prevents large layers of rosin and beeswax forming over individual blanks.

METHODS USED BY VARIOUS MANUFACTURERS

Perkin-Elmer Corporation

Blocking with Wax and Plaster. *Locating Prism Blanks.* — The blanks are wetted and 'wrung' into contact with the locating plate, the protective coating is applied and the whole made ready for pouring by winding a gummed paper tape four inches wide around the plate in lieu of using the brass retaining ring.

Pouring Wax and Plaster.—A melted medium-hard wax is poured onto the plate between the prism blanks to a depth of ¼ inch (Figure 911) and allowed to cool. Next plaster of paris is poured to a depth of about 3 inches. When this has set for about an hour, more melted wax is poured to a depth of ½ inch. When this has cooled a heated blocking plate is pressed into it.

After setting, the paper tape and locating plate are removed.

Relieving the Prism Block. — A bevel is shaved on the outer edge of the wax surface with a knife.

Next the entire wax surface is moistened with gasoline, allowed to soak for not more than one minute, and then the entire surface is scrubbed vigorously with a firm bristled brush, using short circular motions.

After each gasoline application and scrub, the excess gasoline is removed with a dry cloth, which removes all brush marks as well. When the wax has been scrubbed back 1/16 inch from the surfaces that are about to be processed, the wax surface is washed with a soapy cloth in order to remove any remaining gasoline and to insure a clean, smooth surface.

Optical Research, Incorporated

Blocking with Soft-setting Plaster. — In this method, a soft-setting plaster is used and in addition an industrial wax is used on the locating plate. The method eliminates the necessity of rapping or heating the locating plate when removing it from the finished block, which in turn reduces the possibility of the blanks shifting and also results in the tools remaining true for a greater length of time.

Prism blanks are mounted on a 16-inch locating plate with Johnson's Wax for Industry #1568 (S.C. Johnson & Son, Racine, Wisconsin) which should be spread thinly and evenly for the best results. This type of wax has given better results in removing the locating plate than when other adhesives have been used. The blocking plate is equipped with a wall which serves to enclose the greater portion of the plaster block and removes the danger of large pieces of plaster being pulled from the side of the plaster block when it is being slid off the locating plate. In addition, the blocking plate has several holes through which the soft plaster can be poured. U.S. Gypsum Company's #1, Molding Plaster (either 'Red Top' or 'Hydrocal') is used.

When the blanks have been mounted on the locating plate, three wooden pegs of equal height, and between ⅛ inch and ¼ inch in height, are placed around its edge. The blocking plate is inverted over the plate, with the bottom of the wall of the blocking plate resting on the pegs. After the space between the wall of the blocking plate and the locating plate, made by these pegs, has been closed by winding a strip of tape around the plates, plaster is poured through the holes in the blocking plate until the block is full. After the plaster has set for a period ranging from half an hour to an hour, shellac is spread on top of the blocking plate to waterproof the plaster.

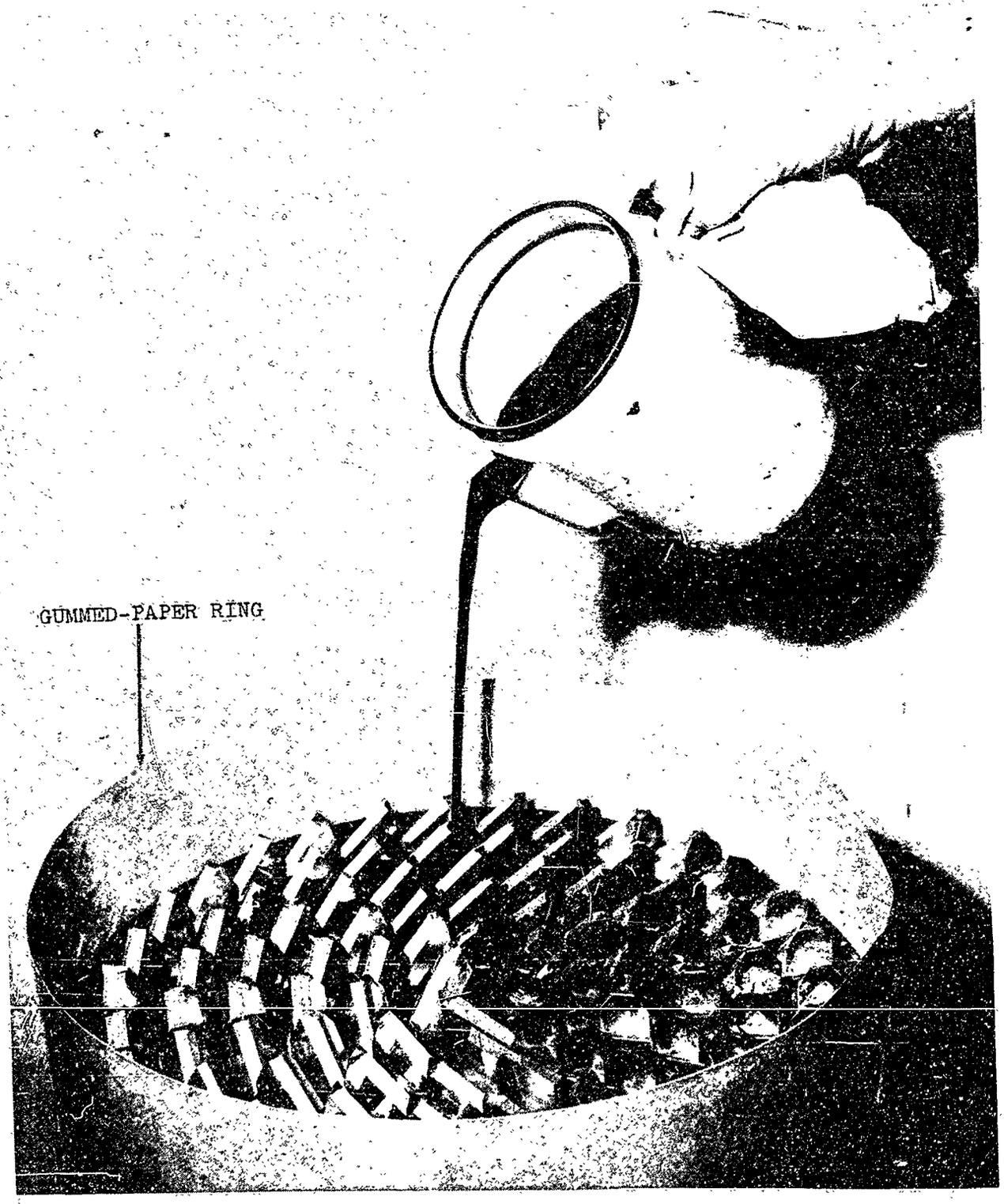

The Perkin-Elmer Corporation

Figure 911.—Pouring Wax as a First Layer of a Plaster Block.

When the plaster has set firmly, the plaster block with its blanks is slid off the locating plate and the wooden pegs and tape are removed. The blanks are relieved by placing the block on a rotating spindle and using a revolving dry wire brush. Collodion or gilsonite is used to waterproof the newly-exposed plaster surface.

Ordnance Instrument Corporation

Blocking Dove Prism Blanks with Plaster.—For convenience, this method is illustrated by describing its application to the blocking of dove prisms, but it has been used successfully with other types. In this method, instead of pouring plaster on the prism blanks after they have been mounted on the locating plate, the locating plate with the blanks is inverted and placed in the wet plaster mixture. In some cases, a specially built cast-iron mold, such as a V-plate is used to aid the plaster in holding the prisms rigidly.

Stacking.—The sides of the prism blanks are waxed together in stacks of seven. Right-angle prisms are waxed on the top of the end and middle prisms (Figure 912-A), to aid in grinding to the correct angles and to keep the blanks from rocking on the locating plate. Then a coating of beeswax is applied to all the surfaces of the blanks except those which are to be fine ground and polished (Figure 912-A and B).

Locating.—A glass locating plate is laid out with straight pencil lines spaced to correspond with the channels of the V-plate on which they will be mounted. Then the stacks are contacted to the locating plate (Figure 912-B) with a thin film of moisture and using the lines as guides. A drop of beeswax is placed on several bottom corners of each stack to prevent them from falling out of position when the locating plate is later inverted. Figure 912-B shows six stacks mounted for grinding one of the inclined faces of the prisms.

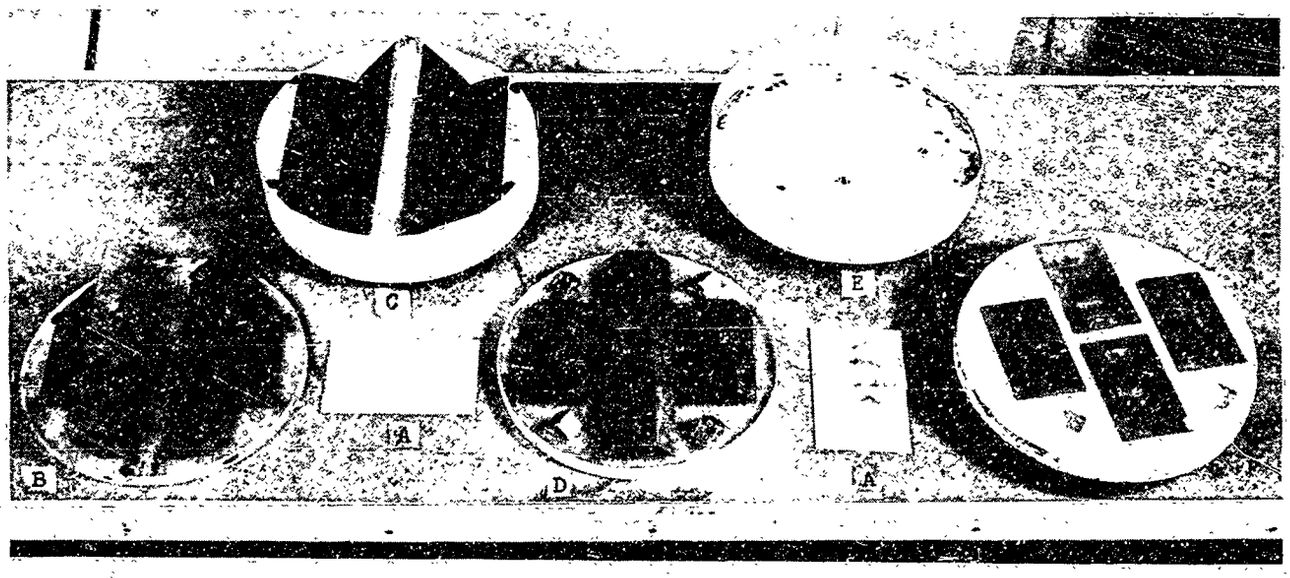

Ordnance Instrument Corporation

(a) Inclined Faces
A = stack with three right-angle prisms attached
B = six stacks seated on locating plate
C = V-plate with paper ring

(b) Hypotenuse Faces
D = four stacks seated on locating plate
E = locating plate with paper ring
F = plaster block

Figure 912.—Steps in Plaster Blocking Dove Prism Blanks.

Blocking Inclined Faces.—The V-plate, which is circular at its base and has two channels, is coated with beeswax and surrounded with a paper ring. (Figure 912-C.) A metal strip is placed on top of the V-plate between the two channels to prevent the locating plate with the prisms attached from settling below a certain level when inverted over the V-plate. The V-plate is filled with plaster and the locating plate with the prism stacks attached is inverted and placed on the V-plate immersing the stacks in the plaster. The prism stacks are allowed to set until the plaster is firm. The glass locating plate is removed by heating it sufficiently to separate it from the prism blanks. The metal strip is removed and the plaster is relieved $\frac{1}{32}$ inch below the exposed surfaces of the prism blanks.

Blocking the Hypotenuse.—After fine grinding and polishing both inclined faces, the three small right-angle prisms are removed from each stack and the dove prisms, still in stacks of seven, are located on a glass locating plate. Four right angle prisms of equal height are placed on the locating plate with the hypotenuse surface of each in contact with it, as shown in Figure 912-D. These right-angle prisms, which should extend above the dove prisms when mounted on the plate, serve to fill in the empty spaces and limit the settling when the plate is placed in the plaster later. The method of locating is the same as described above. A ring of paper is placed around the blocking plate and the plaster is poured (Figure 912-E). Then the locating plate is inverted and placed on the blocking plate. After the plaster has set, the locating plate is removed and the prism blanks are now ready for the working of the hypotenuse face. (Figure 912-F.)

Research Enterprises Limited

Blocking with Thin Plaster ('Kit' Method).—This method, which avoids heavy and cumbersome plaster blocks, may be used for plaster blocking thin surfaces such as are found on several ocular prisms that are relatively flat. Several 'kits' or mixtures may be used, the most common of which is composed of 20 ounces of rosin, 5 ounces of flake shellac, and one ounce of beeswax boiled together and formed into sticks or rounds. Care must be taken to avoid boiling the mixture too long or it will become too hard. The prisms are laid on a locating plate which is moistened with a film of water, and the usual brass ring is placed on the plate. A layer of plaster is poured on top to a depth sufficient to cover by ½ inch the highest blank on the plate. Then a layer of kit, ⅛- to ¼-inch thick, is spread on top of the plaster. Next the blocking plate is placed on top of the kit. The function of the kit is to hold the thin plaster block firmly in contact with the blocking plate. When setting is complete the locating plate and the brass ring are removed. It should be noted here that when using the kit method for blocking, it is not necessary to have holes in the blocking plate and therefore an ordinary flat grinding tool may be used as a blocking plate.

BLOCKING WITH WAX

Mounting Prism Blanks
(Eastman Kodak Company)

Waxed Paper and Paraffin Method.—As an alternative to plaster blocking, surfaces of prism blanks may be mounted by the following method:

Prism blanks are placed in a metal angle-plate, the surface of which is covered with waxed paper to protect the blanks from the metal face of the angle-plate and provide the adhesion for holding them to the plate. (Figure 913.)

After any excess paper at the edge of the plate has been trimmed with a razor blade, the angle-plate with the prism blanks is heated for six to eight minutes or until the paper becomes glossy. Then the plate is placed in a rack, a flat plate is laid on top of the prisms, and a thirty pound weight is applied to hold the prism blanks in place until the plate and blanks have cooled to room temperature, which requires about twenty to thirty minutes. (Figure 914.)

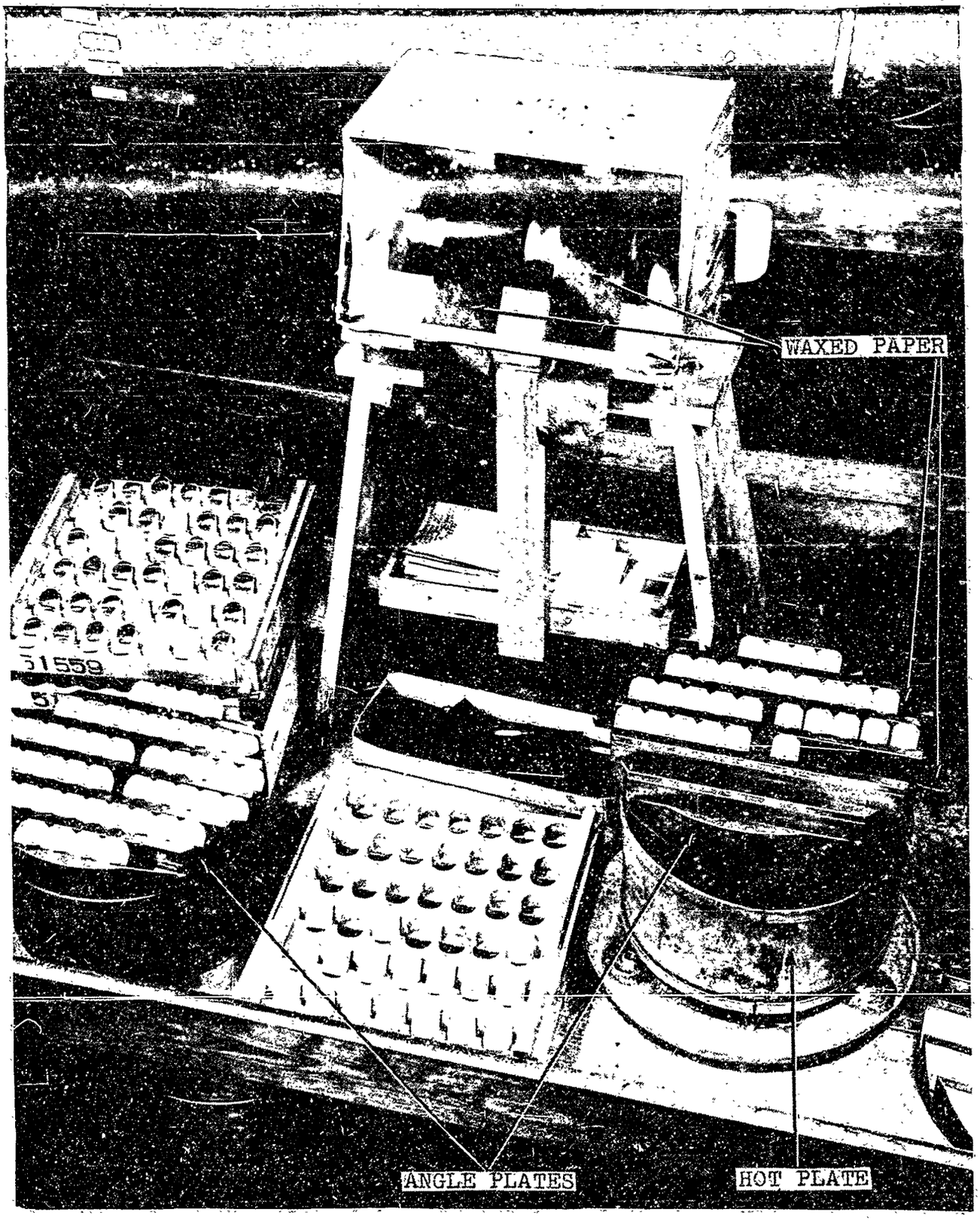

Eastman Kodak Company

Figure 913.—Mounting Porro Prism Blanks in Angle Plates Using Waxed Paper.

After the block has cooled, paraffin which acts as a filler to give additional support to the blanks is poured carefully between them to form a solid block. (Figure 915.)

This method of mounting with metal angle-plates, waxed paper, and paraffin is suitable for mass production. The accuracy of the finished product depends on the accuracy of the angle-plate.

Mounting Glass Plates

Glass plates, such as blanks of reticles and rhomboid prisms, must be mounted carefully before fine grinding and polishing. They are mounted on a round blocking plate so that one of the parallel surfaces of each blank is in firm contact with the surface of the blocking plate. After the first side is polished, the blanks are transferred to another blocking plate where the newly-polished side of each blank is placed in contact with the paper on the plate. The second side is then ground and polished.

Correcting the Blocking Plate Surface.—The first operation is to check the flatness of the metal blocking plate. The plate is thoroughly cleaned and its flatness is checked with a straightedge. If no light shows, the plate is satisfactory. If light does show, the plate is corrected by lapping two plates together, using a fine abrasive, until the desired degree of flatness is obtained.

Preparing the Blocking Plate.—The plate is set on an iron tripod and heated with bunsen burners spaced so that the plate will be heated evenly. Heating should continue only until a thin layer of the first-side wax used to mount the glass can be spread over the surface easily.

Mounting the Blanks.—Blanks of approximately uniform thickness are placed on the blocking plate in systematic order, with four 'markers' evenly spaced overhanging the edge of the plate about ¼ inch as shown in Figure 916. These markers permit micrometer readings to be taken of the thickness, and thus afford a convenient means for checking the progress of the grinding operation. Defective blanks may be used as markers since the markers usually are rejected for micrometer

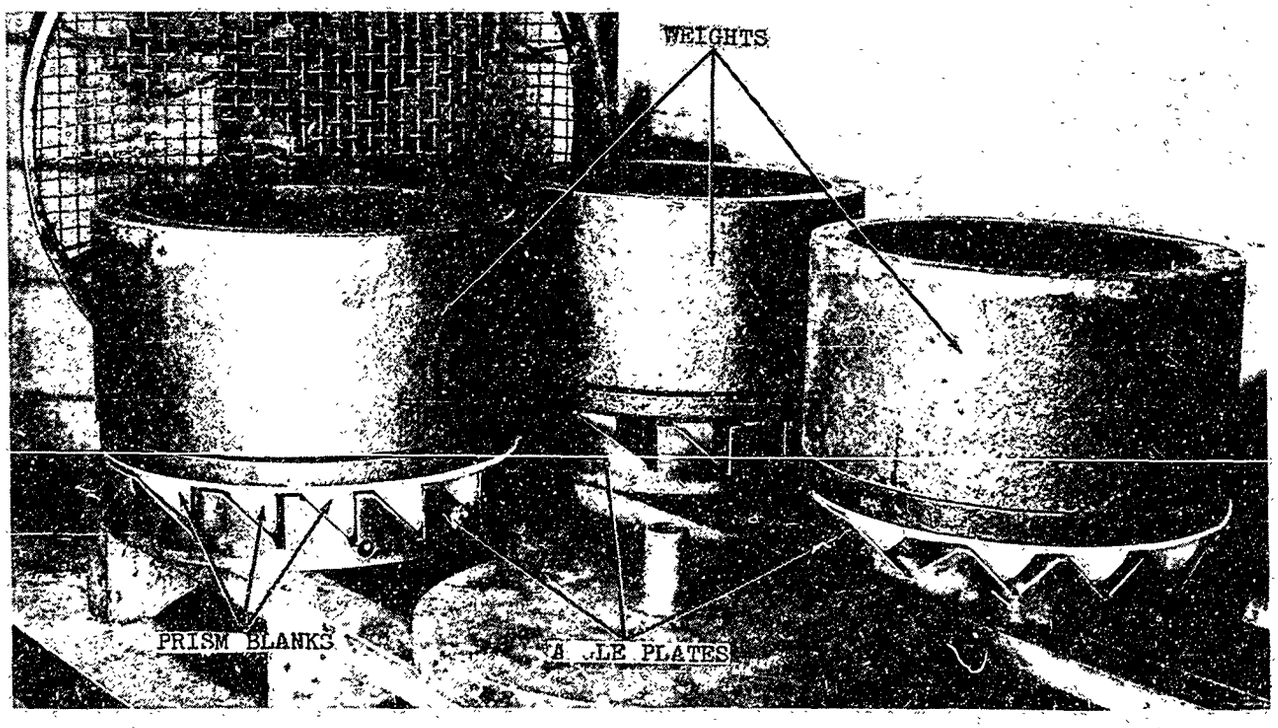

Eastman Kodak Company

Figure 914.—Prism Blanks Mounted with Waxed Paper Weighted Down While Being Cooled Artificially.

scratches. Each blank is pressed down, using a small wooden stick, so that it will make very close contact with the plate. After the block has been allowed to cool in air for about 45 minutes, it is placed in a water trough for further cooling. Care should be taken that no water comes in contact with the glass while it is still hot to the touch, or breakage will occur.

When the blocking plate has cooled, any excess wax that may be adhering to the edges of the blanks is removed with a blunt knife. After this, the exposed surface of the blanks is rubbed briskly with a small wooden block, wrapped in a cloth and moistened with gasoline, and then the blanks are ready for fine grinding and polishing on the first side, as described in Chapter 11.

Transferring Glass Plates

After the first side is polished, the blanks are 'transferred' to another plate for grinding and polishing the second side.

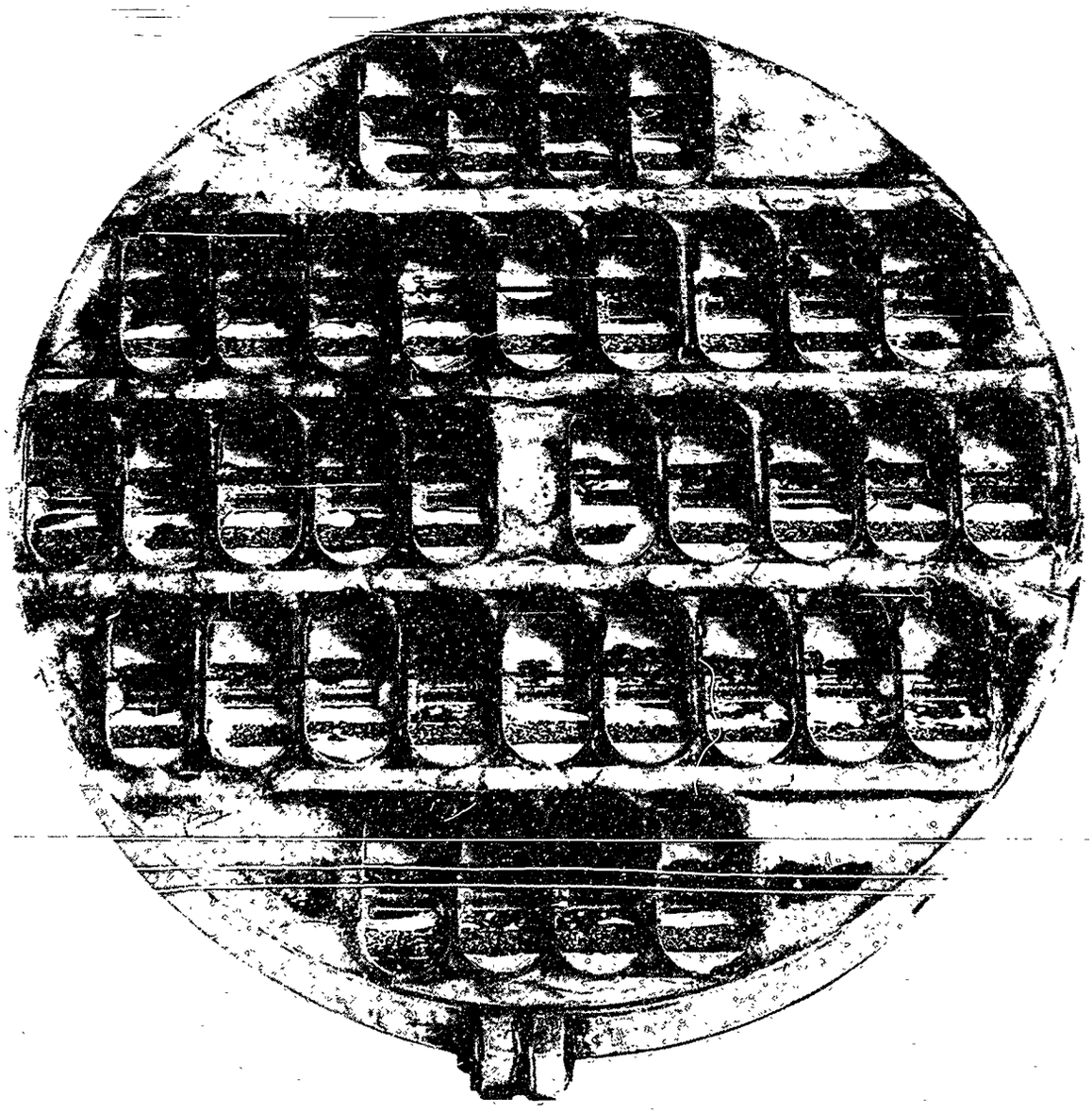

Eastman Kodak Company

Figure 915.—A Block of Porro Prisms After Polishing Hypotenuse Faces, Showing Paraffin Filler.

Preparing the Transfer Plate.—A second blocking plate is placed on an iron tripod, leveled, and heated with bunsen burners. As soon as the plate is warm enough to melt the second-side wax, the burners are removed and a thin layer of wax spread on the plate. Next a piece of newspaper is placed smoothly over the wax, excess paper around the edge of the plate is cut away, and another layer of second-side wax is applied.

Transferring the Blanks.—The inverted first-side block is lowered concentrically onto the prepared surface of the second-side plate in such a way as to prevent scratching the polished surfaces of the blanks. Next, several five-pound weights are placed on top of the first-side block to insure close contact with the second-side plate (see Figure 916), and the whole is allowed to cool for about one hour.

After cooling, the weights are removed, the combined plates are inverted on the tripod, and the first-side plate, which is now on the bottom, is heated with bunsen burners. This heating should continue only until the wax holding the blanks to the first-side plate has melted. The first-side plate now can be removed, leaving the blanks firmly mounted on the second-side plate. The next operation is to grind and polish the second side.

When the block has cooled, all excess wax is removed from the transfer block, either in the manner described for the first-side plate or by a simplified method discussed in Chapter 23. In the latter method, a soap solution, warmed to 180°, is poured on the plate and the plate is scrubbed vigorously with a brush until it is clean.

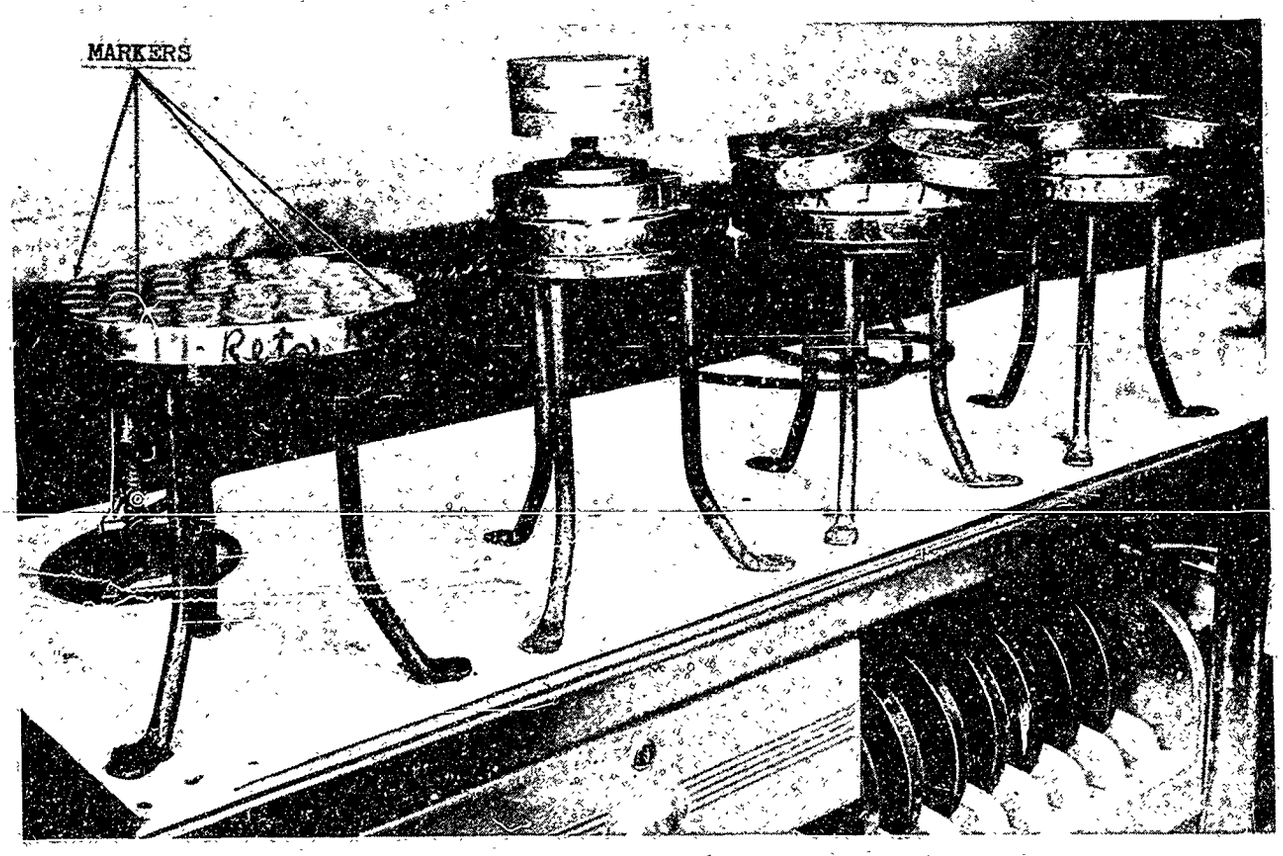

Figure 916.—Transferring Reticle Blanks.
The first-side block is weighted down against the transfer plate while cooling.

CHAPTER 10

BLOCKING LENSES

	Page No.
Backing.	1002
Single Mold Method.	1002
Cleaning.	1002
Heating Lens Blanks and Wax.	1002
Applying Wax to Lens Blank.	1002
Split Mold Method (Anchor Optical Corporation).	1003
Preparing the Mold.	1003
Heating and Pouring Wax.	1004
Removing Lens Blank from Mold.	1004
Soft-ring Mold Method (Naval Gun Factory).	1005
Blocking Lens Blanks Singly (Anchor Optical Corporation).	1005
Blocking Lens Blanks in Multiple.	1006
Locating.	1006
Locating Shell.	1006
Arrangement of Lens Blanks.	1006
Mounting.	1006
Arbor Press Method.	1006
Large Radius Lens Blanks.	1006
Small Radius Lens Blanks.	1007
Hand Method.	1007
Large Radius Lens Blanks.	1007
Small Radius Lens Blanks.	1008
Cold Method.	1008
Using Wax Pellets.	1008
Using Plaster of Paris.	1008
Spot Blocking.	1009
Wax Method.	1009
Plaster of Paris Method.	1009
Removing Lens Blanks After Polishing.	1011
From Blocking Shells.	1011
From Spot-blocking Shells.	1011
From Plaster Blocks.	1011

This chapter deals with operations which prepare lens blanks for fine grinding and polishing after rough grinding has been completed. A plastic binder, usually wax, is first attached to the blanks in an operation known as 'backing'. When three or more lens blanks can be processed at one time, they are 'located' or positioned on the spherical surface of a 'locating shell' having very nearly the same radius of curvature as the lens blanks themselves. They are then 'mounted' on a 'blocking shell' where they are held firmly in place by means of the backing. The term 'blocking' includes both 'locating' on the 'locating shell', and 'mounting' on the blocking shell.

Three methods of shaping and applying the wax or backing are described in this chapter—two in which the wax is molded into 'buttons' and a third in which the wax is formed into the shape of a ring. An accurate method of cold blocking, as opposed to the conventional heated-block methods, is also discussed.

Lens blanks are usually blocked in multiple at one or more stages of manufacture, although certain blanks must be processed individually because they are of such a shape that multiple blocking is not feasible.

Multiple processing of several blanks as a unit can be done by two distinct methods—either by mounting (1) on the spherical surface of a blocking shell, or (2) in the cavities of a 'spot blocking shell'. When mounting lens blanks on a blocking shell, it is assumed that they have been rough ground to the proper curvatures and thickness. Spot blocking shells, which contain cavities for mounting each of a group of lens blanks in a fixed position have been described in Chapter 8. Appendix D contains a chart showing all types of blocking fixtures used.

Most of the procedures described are in use at Frankford Arsenal and illustrate the general principles of backing and blocking. Some variations of these procedures are also included because they have been used successfully by other manufacturers.

BACKING

'Backing' is a general term applied to the operation in which a wax or pitch binder is attached to one surface of a lens blank preparatory to blocking. When this wax or pitch backing is made into a shape similar to a button, it is often called a 'pitch button' and the operation may be referred to as 'pitch buttoning'.

Single Mold Method

A single mold is a metallic cup-like receptacle of the same shape and size as the pitch button to be attached to the lens blank. This pitch button must cover the entire surface of the blank and provide a sufficient depth of wax for binding with the blocking shell. (See Figure 1001.) While in use, the mold is kept chilled in a pan of ice water to expedite setting and to prevent the pitch from sticking to it.

Cleaning.—Lens blanks may be cleaned by soaking in alcohol and then wiping clean and dry, or by washing and degreasing as described in Chapter 23, *Cleaning Optical Elements*. Lack of cleanliness of a lens blank surface, or of the equipment and materials used in processing, often make it difficult if not impossible to mount a blank properly. For example, a foreign particle between the lens blank surface and the locating shell may affect the accuracy of the mounting and cause subsequent processing to be unsatisfactory. Again, if wax is applied to a polished surface that is not clean, it is quite possible to scratch the surface when removing the wax.

Heating Lens Blanks and Wax.—The lens blanks are arranged in rows, on a clean paper towel which is spread on a heating unit, with the surfaces to be processed downward. Then the blanks are heated to between 120 and 130°F., the maximum temperature at which they may be handled comfortably.

Backing wax is maintained at a temperature of about 215°F., so that it will flow slowly when scooped up on the end of a stick.

Bunsen burners may be used for heating, but steam or electrically heated units, thermostatically controlled, usually prove more satisfactory.

Applying Wax to Lens Blank.—The quantity of wax needed to produce a button of the desired size, is gathered on a small wooden stick by revolving it slowly in the 'pitch pot', and

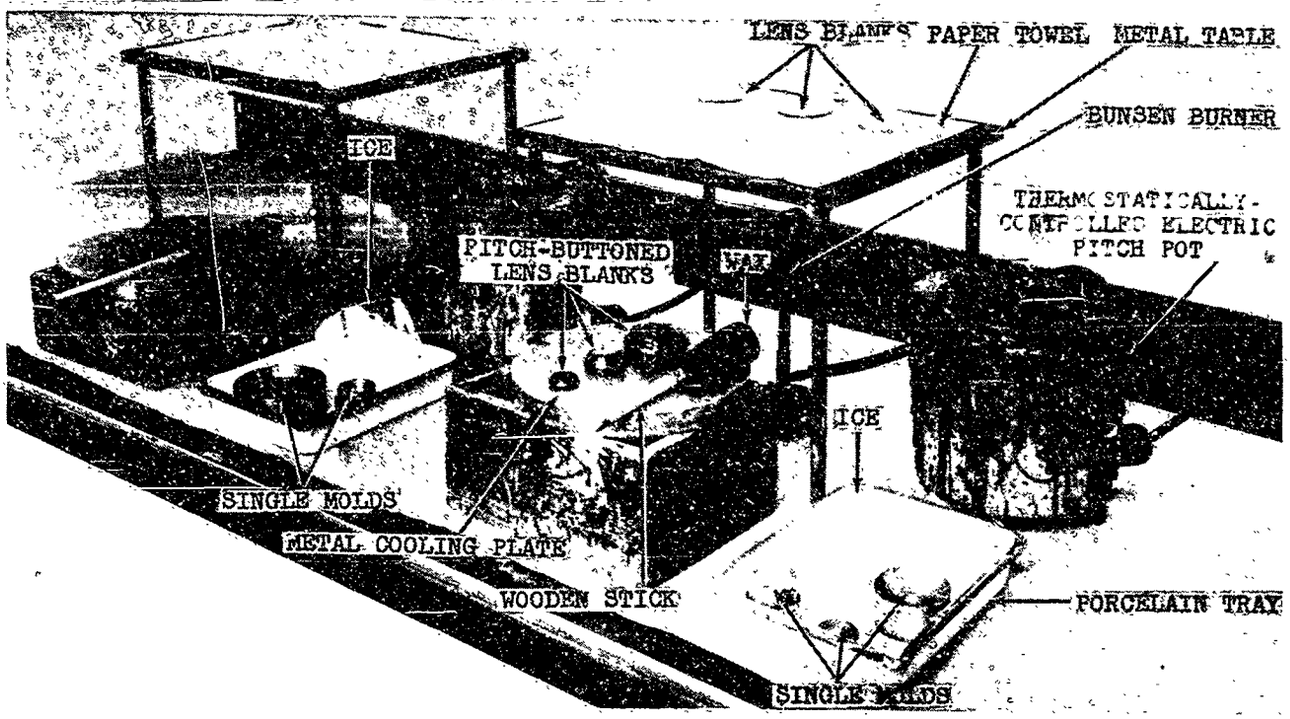

Figure 1001.—Arrangement for Backing Lens Blanks by the Single Mold Method.

then withdrawing it with the desired amount of wax. Next the wax is rolled on a cold metal plate placed directly in front of the operator, until it has cooled to the point where it will retain its shape but is still plastic enough to mold. Then it is pressed on the surface of a warmed blank until it sticks. The whole is lifted from the heating unit, and with the blank held in one hand, the wax is distributed, with a rotating motion of the stick, over the entire surface to be backed.

After the desired amount of wax has been so transferred to—and distributed over—the backing surface of the blank, the stick is withdrawn and the lens blank with the wax attached is inverted and pressed into the mold which is resting in a pan of ice water. This is done to shape and set the button.

During this operation any excess material will be forced outside of the mold and will adhere to the edge of the lens blank. The surplus is removed after cooling (by scraping it away with a knife or similar tool) and the exposed surface of the blank is cleaned again thoroughly to make it ready for polishing.

Split Mold Method

(Anchor Optical Corporation)

Unlike the open or single mold method described above, the split mold consists of two mating halves, as shown in Figures 1002 and 1003. The lower half has a recess to receive the lens blank and supports the edge of the blank. The upper half has a similar recess, also a hole in the top through which the wax is poured. The inside of the upper half is the shape and size of the pitch button. It will be seen that both halves of the mold may be alike, if desired, and that the size of the molds will vary for lenses of different sizes and shapes.

A convenient device for dispensing wax to this type of mold is shown in Figure 1004. This figure illustrates use of the dispenser when halves of split molds are used as single molds. The dispenser is equally effective when used in connection with complete split molds.

Preparing the Mold.—To prevent sticking, the inner surfaces of the mold are painted with a solution of rouge and water which must be repeated at sufficiently frequent intervals to assure that no bare metal is exposed. The lens

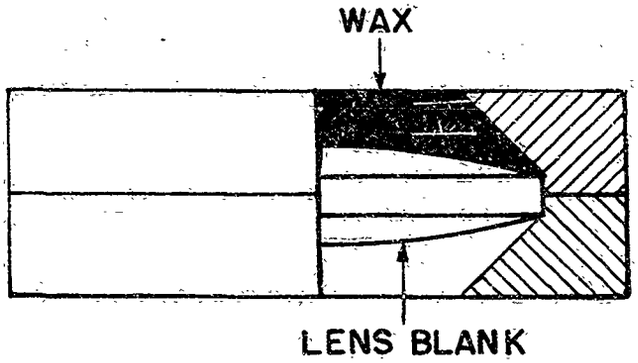

Anchor Optical Corporation

Figure 1002.—Pitch-button Split Mold.

which need not be heated, unless of large size, is placed in the bottom section of the mold, resting in the recess provided for that purpose and then the upper section is placed in position over it, (see Figure 1002).

Heating and Pouring Wax. — A pitch pot equipped with pouring nozzle in the base is placed above the turntable, and the wax, which is maintained at a temperature of 215°F., is allowed to run into one mold after another as the turntable below is turned.

Removing Lens Blank from Mold.—After allowing two or three minutes for the wax to set, the upper section of the mold with the pitch button and lens blank is lifted from the lower section. The blank with its button is released from the mold by pressing on the button through the pouring hole with the blunt end of a wooden stick, after which the blank is trimmed and cleaned as described under Single Mold Method.

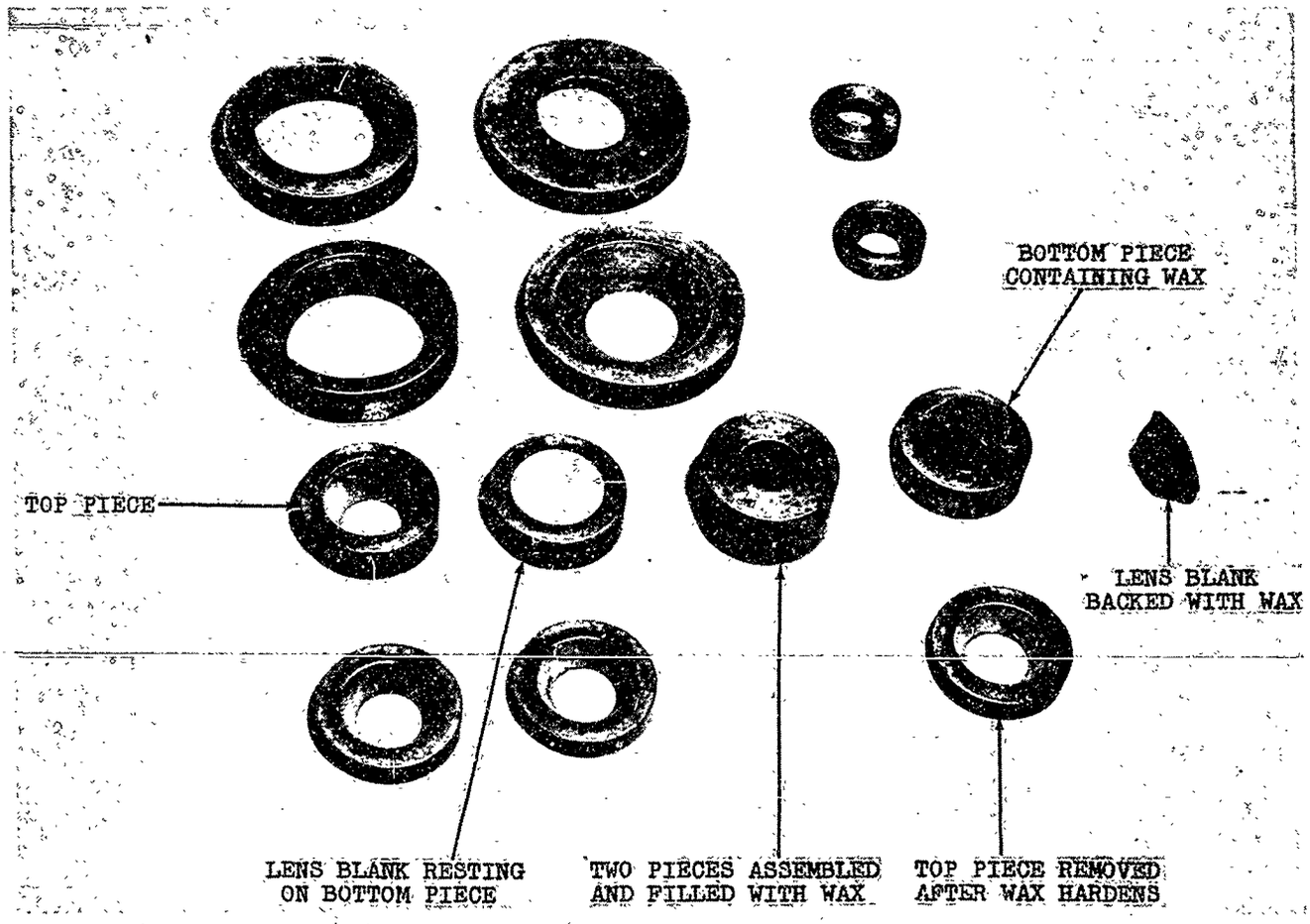

Anchor Optical Corporation

Figure 1003.—Split Molds Used for Backing Lens Blanks.
(Official U.S. Navy Photograph)

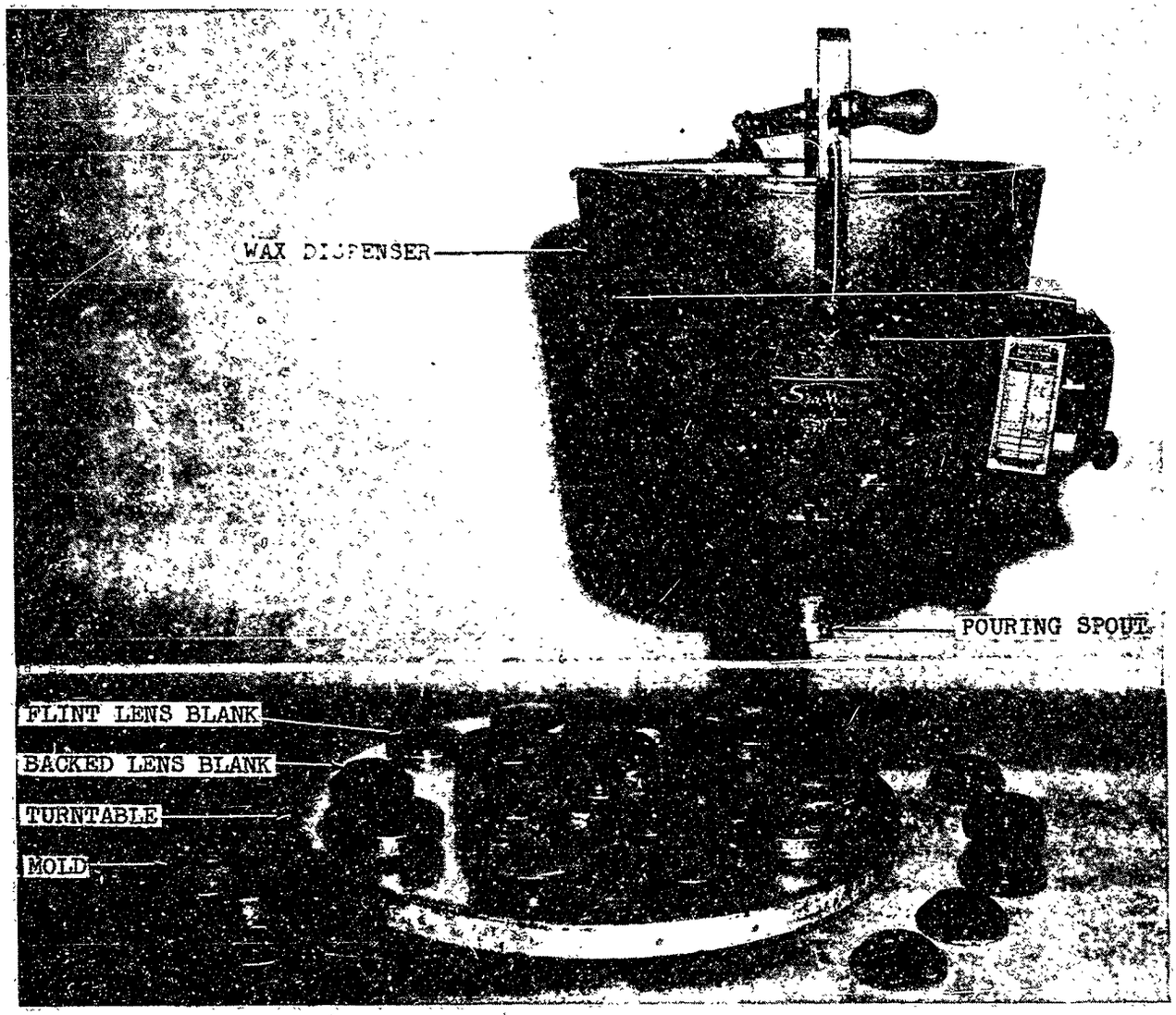

Anchor Optical Corporation

Figure 1004.—Wax-dispensing Device for Use in Backing Lens Blanks.
(Official U.S. Navy Photograph)

Soft-ring Mold Method

(Naval Gun Factory)

Very thin lenses, and lenses whose center thickness is considerably less than their edge thickness, are apt to 'spring' during backing and blocking.

To avoid the possibility of 'springing' the so-called 'soft ring' mold method has been developed.

Pitch, consisting of five parts asphalt, five parts plaster of paris, and one part coal tar, is made into stick form. The lens blank is backed by heating and applying, to the outer portion of surface to be backed, a quantity of pitch sufficient to form a ring. The ring is shaped by pressing against a flat plate, and the blank then is ready for blocking.

BLOCKING LENS BLANKS SINGLY (ANCHOR OPTICAL CORPORATION)

A method for mounting lens blanks singly, as developed by Anchor Optical Corporation for processing the concave surfaces of small lens blanks, uses a blocking shell approximately

$1\frac{3}{16}$ inch in diameter and ½-inch thick, as both a mold and a blocking shell. (See Figure 1005.) On one end is a small depression into which the pin of the polishing arm fits; while the other end has a cavity that extends to a sharp edge. This cavity is filled with the pitch and the lens blank side to be backed is pressed into it immediately. Another method for mounting lens blanks singly is described under "Short Radius Work" in Chapter 12.

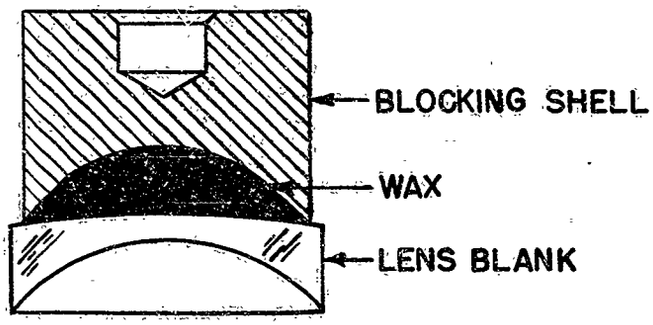

Anchor Optical Corporation

Figure 1005.—Single Lens Block for Small Concave Blank.

BLOCKING LENS BLANKS IN MULTIPLE

The number of lens blanks that can be processed successfully on one blocking shell depends on the ratio of the radius of curvature of the blank to the diameter of the blank. It will be seen that, for a given diameter, as the radius of curvature decreases, the size of the shell decreases, and the number of pieces that can be mounted on one shell will decrease also until finally individual processing is necessary. It is necessary to block convex lens blanks individually when the ratio of the radius of curvature of the blank to the diameter of the blank $\frac{R}{D}$ is less than .83, and concave blanks should be blocked individually when this ratio is less than .87.

The maximum diameter of blocking shell that can be used is approximately twice the radius of curvature of the lens blank surface to be processed. However, the size may be limited below this theoretical maximum because of the type of machine on which it is to be used or to make the block easier to handle. While shells having a diameter of eight inches or less are the most practical to handle, some as large as sixteen inches in diameter have been used.

Locating

Locating Shell.—The function of the locating shell is to hold the lenses in the proper position during the blocking operation. Theoretically the radius of curvature of this tool should be the same as that of the finished lenses but actually it is a little shorter when convex blanks are to be blocked and a little longer when concave blanks are to be blocked. The purpose of this slight difference in curvature between tool and blank is to create a partial vacuum to hold the lenses lightly in the desired position until they are transferred to the work block. In some shops the fine grinding tool is used as a locating shell as well, particularly for blocks which substend an angle of less than 120 degrees. Although this practice may be followed where economy is necessary, it is safer to use a special locating shell of the correct curvature.

Arrangement of Lens Blanks.—When a number of lens blanks are mounted on one blocking shell for processing, regardless of the curvature of the surfaces, they must be arranged symmetrically so that the grinding and polishing will be uniform for all. The symmetrical pattern selected should be the one which allows the greatest number to be placed on the block. Cardboard or rubber templates, cut in the desired pattern, may be used as a guide in locating. (See Figure 1006.) The template also simplifies the relieving operation as the mere act of removing the template relieves the block.

When the number of blanks to be processed is insufficient for good operation, 'dummy' pieces are added to complete the proper symmetrical arrangement. The surfaces of these pieces, which act as supports for the polishing or grinding tool, should have the same curvature as the surfaces to be processed.

MOUNTING

Arbor Press Method. *Large Radius Lens Blanks.*—After the locating shell has been cleaned thoroughly, the lens-blank surfaces to

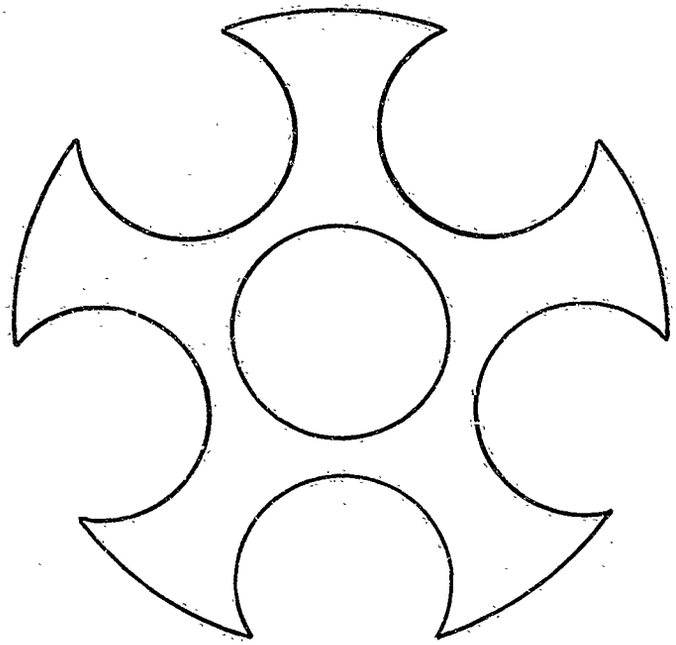

Figure 1006.—Template for Arranging Lens Blanks Symmetrically on a Locating Shell.

be processed are moistened just enough to adhere to the surface of the locating shell. While too much moisture may cause the blanks to slide, when they are mounted properly a firm suction is set up between the moistened surface and the locating shell.

The locating shell with its blanks is placed on the anvil of the arbor press, and the blocking shell is cleaned thoroughly and attached to the spindle. Next the blocking shell is heated with a bunsen burner until a piece of the blocking wax will melt on it unless, by an alternate method, it has been heated before the locating shell is placed in the press. (See Figures 1007 and 1008.) The heated blocking shell is lowered slowly until it comes in contact with the pitch buttons on the back of the lenses when a steady, firm pressure is applied until the wax melts. At this point the operator should check the accuracy of the contact. If contact with the wax is satisfactory, pressure is applied again until the blocking shell has been forced down as close as possible to the lens blanks without making direct contact with them, as such contact would damage their surfaces. The thickness of the layer of wax between the blanks and the blocking shell should be at a minimum, in order to reduce any tendency of the blanks to shift during processing. After the blocking shell has been brought to the desired position it is cooled by a stream of water to harden the wax. The water should not be cooler than 50°F. A lower temperature may crack the glass, or cause too rapid contraction of the wax and thereby separate the pitch buttons from the blanks. After cooling, the block is removed and is ready for processing.

Small Radius Lens Blanks.—The following method is sometimes used to block small lens blanks three at a time.

The blanks are placed on a locating shell with a film of moisture as was described previously, but in this method they are first heated to avoid breakage when they contact the hot wax.

Sufficient wax, hot enough to flow easily, is poured into the concave member, whether it be blocking shell or locating shell, so that the amount of wax and the convex member together will just fill the concave member. The convex member, whether locating shell or blocking shell, is lowered into the wax (see Figure 1009).

When the wax has cooled sufficiently the blocking shell, with the blanks and wax adhering to it, is removed while tapping the locating shell lightly. Finally, the lens blanks are relieved, using a solvent.

Hand Method. *Large Radius Lens Blanks.*—Lens blanks may be hand blocked without the aid of an arbor press. The locating shell, containing the backed blanks and the steel-ball stops (not illustrated), is held upright in a fixture. (See Figure 1010 which illustrates this method applied to blocking convex blanks.) The heated blocking shell, held by a wooden handle not shown in the photograph, is placed upon the pitch buttons. The steel-ball stops are held in place with modeling clay and are placed symmetrically around the edge of the locating shell. These stops limit and assure the evenness of the settling of the heated blocking shell so that the centers of curvature of the blocking shell and of the locating shell will coincide. Added weight is sometimes used to speed up the rate of settling. The work block

is cooled with water after the blocking shell has settled sufficiently, and the locating shell is then removed.

Small Radius Lens Blanks.—Wax is poured on a heated blocking shell and formed by a complementary tool into a layer of uniform thickness, any excess wax at the edges being scraped off. Then the lens blanks are seated in the wax on the blocking shell by hand, and pressed in up to their edges with a complementary tool whose function is the same as a locating shell.

Cold Method.—This is a blocking method for fine grinding and polishing elements, the surface curvature of which must be accurate within one or two interference rings when tested with a test glass. Certain height-finder objective lenses, mirrors, optical flats, and wedges fall within this class.

Using Wax Pellets.—Little warm pellets of uniform size and thickness such as described in Chapter 16 under Windows and Mirrors, are spaced evenly on the blocking shell, and the element is pushed down on them before they set.

Since no heat is applied to either the element or the locating shell, there is less possibility of glass warpage by this method than by the hot methods described in Chapters 9 and 12. The surface contour of the element remains accurate.

Using Plaster of Paris.—Lens blanks may be mounted on blocking shells using plaster of paris instead of blocking wax. The method that is used is similar to that described for mounting prism blanks in plaster, (see Chapter 9), and a rubber template may be used, both to locate the blanks and to simplify the relieving operation.

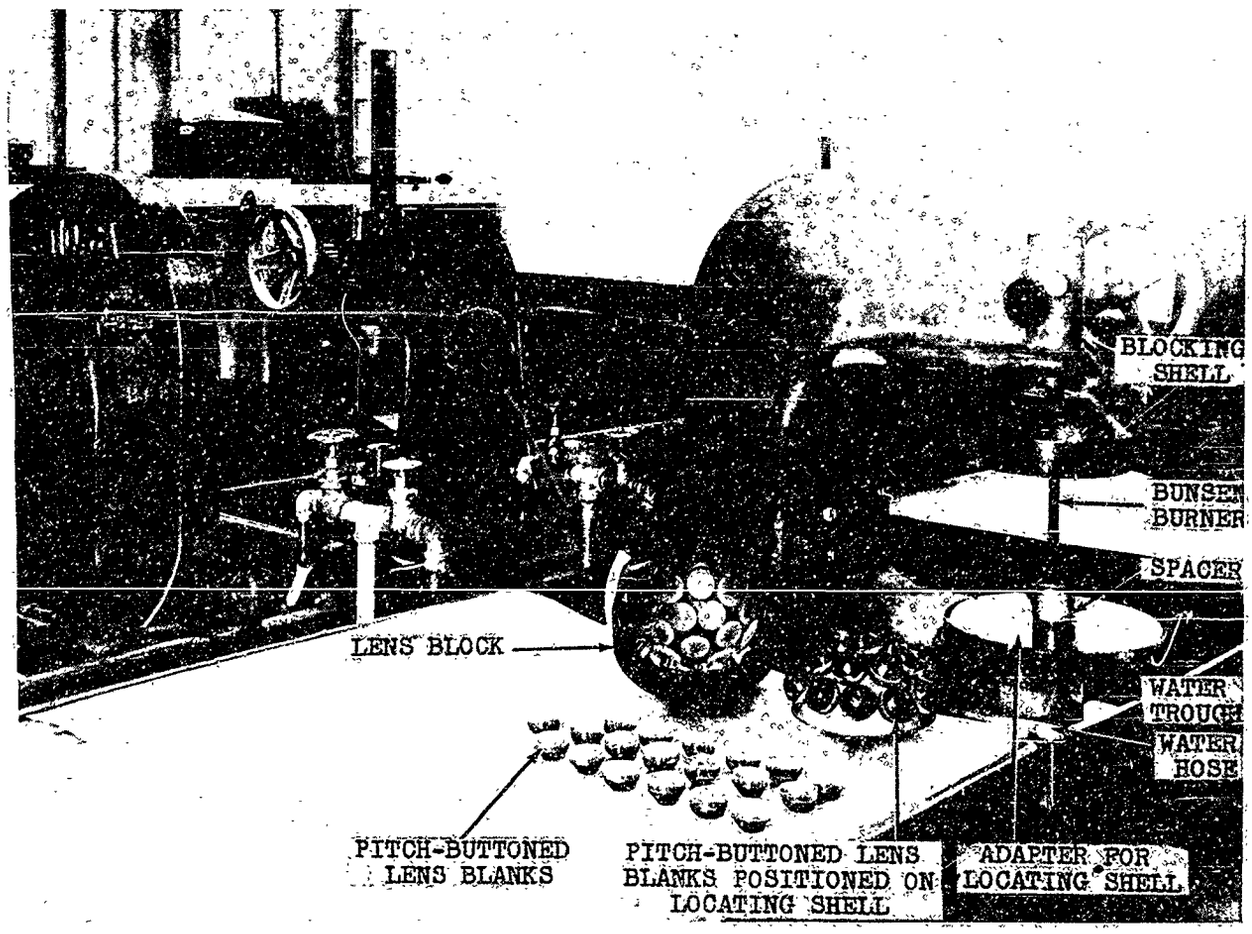

Figure 1007.—Arbor Press Used for Blocking Concave Lens Blanks.

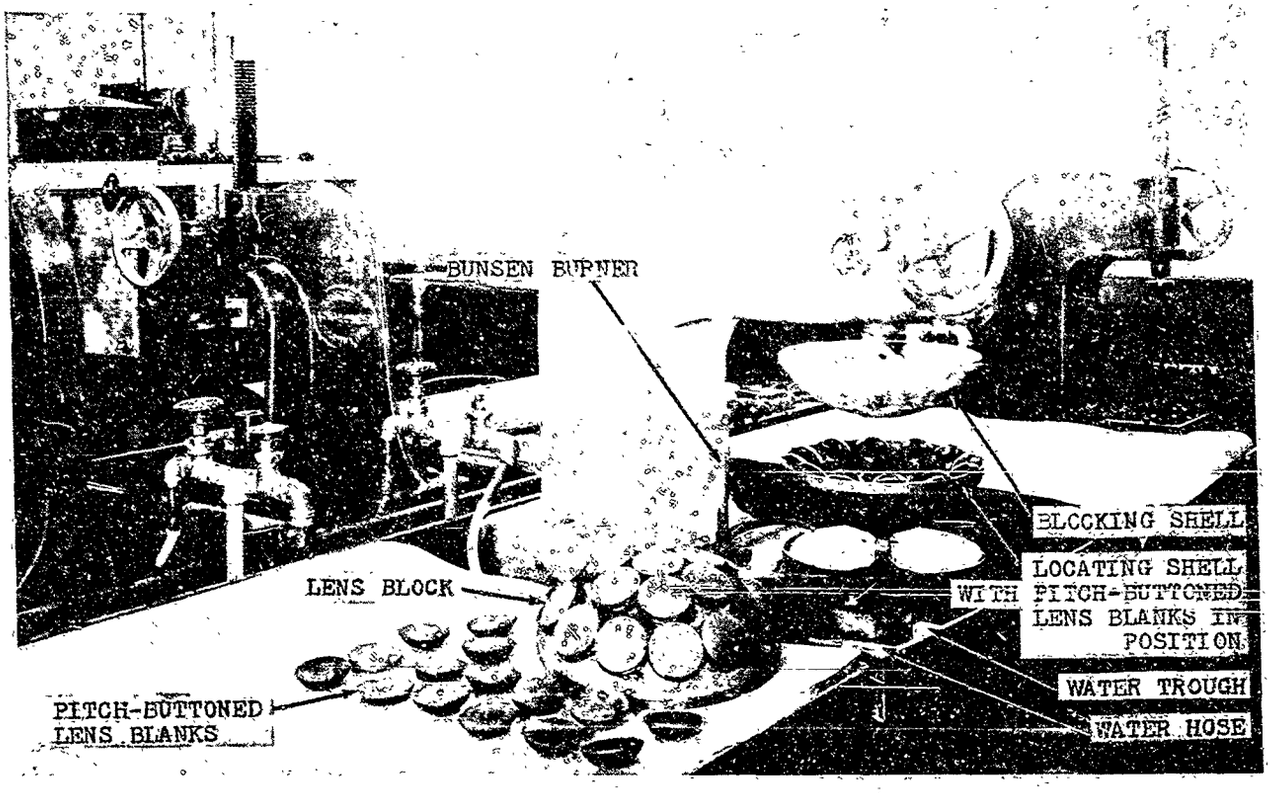

Figure 1008.—Arbor Press Used for Blocking Convex Lens Blanks.

Spot Blocking

The manufacture of spot-blocking shells is described in Chapter 8 and illustrated in Figure 807.

Wax Method.—After the spot-blocking shell has been heated with a bunsen burner or by other suitable means, each spot cavity is coated with wax. This is done either by melting 'stick' wax against the heated surface of the cavity or by brushing melted wax over the cavity surface. The lens blank is placed in the waxed cavity and rests on a shoulder in the cavity.

After the blanks have been mounted, the spot-blocking shell is put in a water trough to cool, taking care that the water does not touch the blanks. The shell is cooled to a lukewarm condition and is then removed from the water to avoid 'freezing' the wax. Freezing causes air bubbles under the blanks and makes it necessary to remount them.

After a visual inspection to insure that the blanks have been mounted properly, the block is ready for processing.

Plaster of Paris Method.—Lenses which may spring during polishing, or warp if too much heat is applied to them, are mounted with plaster of paris instead of with regular blocking wax. In using plaster of paris, the blanks are placed in a tray and heated to about 150°F., and then a thin coat of beeswax is brushed on the lens surfaces that will be next to the plaster. This beeswax acts as a protecting layer between the blanks and the plaster and, in addition, makes it comparatively easy to remove the plaster after the polishing has been completed. The cavities of the spot-blocking shell are filled with plaster flush with the surface of the shell, the lens blanks are pressed into place until they are seated squarely and firmly, and then the block is set aside until the plaster has set. Any excess plaster that remains around the edges of the blanks is scraped away before the block is put on the grinding and polishing machines.

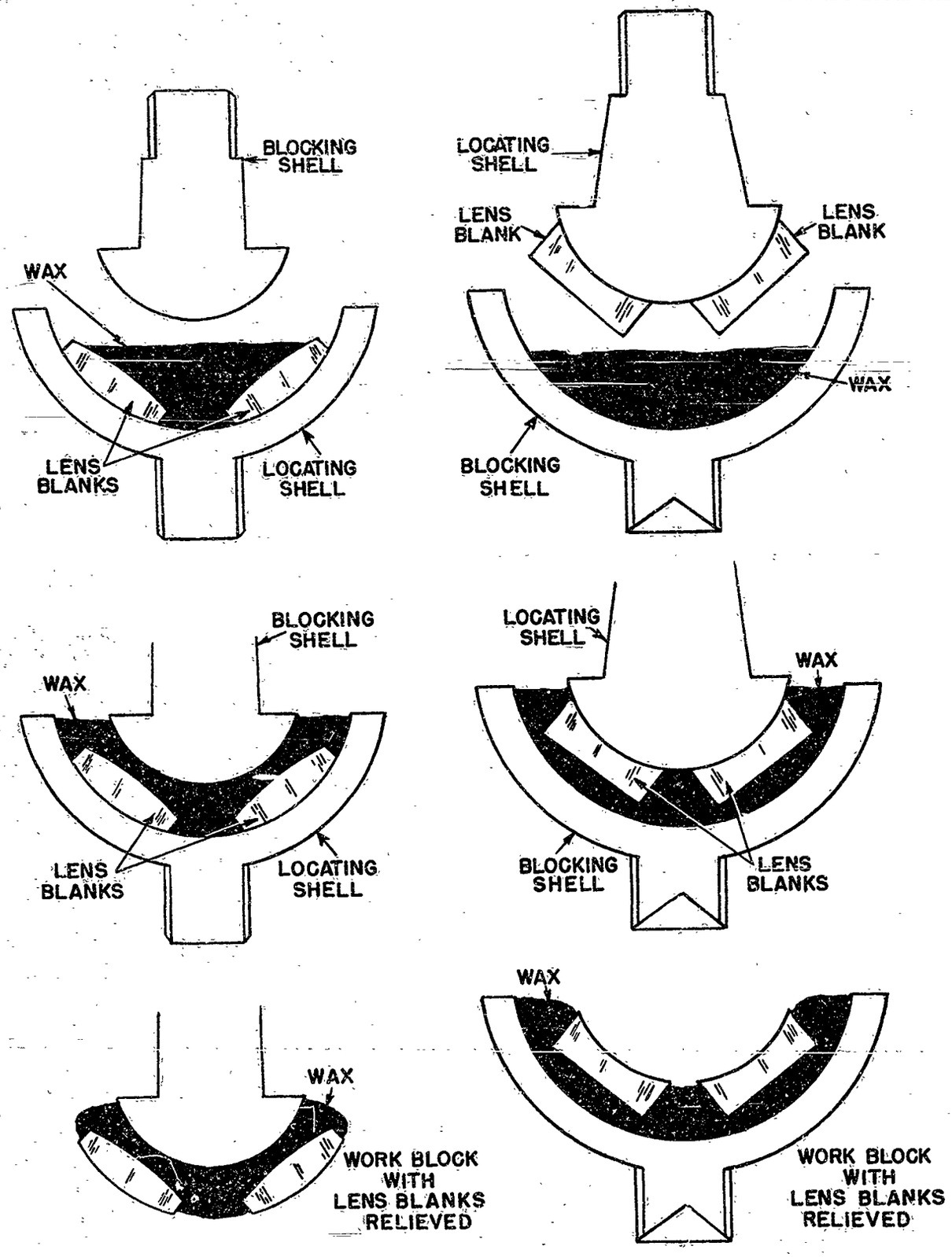

(a) Convex Lens Surface Exposed

(b) Concave Lens Surface Exposed

Figure 1009.—Blocking Lens Blanks by Pouring Wax into a Blocking or Locating Shell.

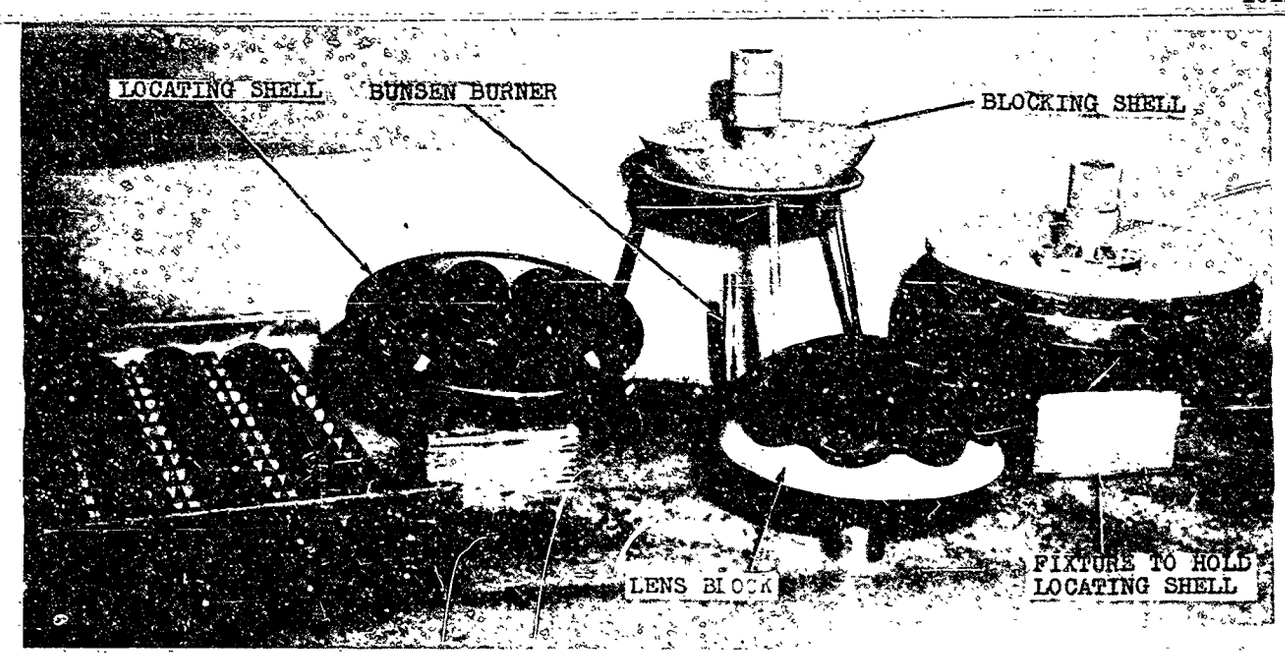

Anchor Optical Corporation

Figure 1010.—Blocking Convex Lens Blanks by Hand.
(Official U.S. Navy Photograph)

REMOVING LENS BLANKS AFTER POLISHING

From Blocking Shells. — After polishing, the lens blanks, with buttons attached, can be removed from the work block by means of a small metal wedge. Pitch buttons are then separated from the blanks by holding a wooden peg against each button and striking it sharply. Any wax which still adheres to the blanks must be removed with solvent.

An alternate method is to chill the entire lens block using an industrial subzero freezer, or 'dry ice', to a temperature of from −10° to −30°F. The unequal contraction of the glass and wax breaks the bond of the wax and permits the polished blanks to be removed with little or no wax adhering to them. The chilling requires 20 to 30 minutes, but greatly simplifies the problem of cleaning the lenses.

From Spot-blocking Shells. — The spot-blocking shell is heated with bunsen burners to soften the wax and the lens blanks are removed by hand or with a suction cup. If the blanks are mounted with plaster, it is necessary only to heat the block until the plaster cracks, releasing the blanks. Any plaster which still adheres to the blank is knocked off and the blanks are wiped clean.

From Plaster Blocks.—The method for removing lens blanks from blocking shells when mounted in plaster of paris is similar to that used for removing prisms, as described in Chapter 9.

CHAPTER 11

FINE GRINDING AND POLISHING FLATWORK

	Page No.
Fine-grinding and Polishing Machinery.	1104
Fine Grinding Flatwork.	1106
Grinding Tool.	1106
Adjusting the Oscillating Arm.	1107
(a) Normal Setting.	1107
(b) Corrections.	1107
Selecting Abrasives.	1107
Grinding Procedure.	1108
Hand Grinding.	1108
Machine Grinding.	1108
Inspecting After Fine Grinding.	1109
Polishing Flatwork.	1109
Pitch Polishing Tool.	1109
Relative Position of Work and Tool.	1111
Polishing Procedure.	1111
Application of Rouge.	1111
Fitting the Pitch Polishing Tool.	1111
Adjusting the Oscillating Arm.	1112
(a) Normal Setting.	1112
(b) Corrections.	1112
Checking the Polishing Tool.	1113
Checking for Flatness.	1113
Polishing Time.	1113
Stains.	1113
Inspecting After Polishing.	1113
Special Polishing Methods.	1116
Polishing with a Stationary Arm.	1116
Polishing with a Felt Polishing Tool.	1116
Fine Grinding and Polishing Prisms.	1117
Pitch Polishing Tool.	1117
Avoiding Unnecessary Handling of Block.	1117
Tolerance of Surface Contour.	1117
Loose Prisms.	1117
Effect of Temperature.	1118

	Page No.
Fine Grinding and Polishing Glass Plates.	1118
Grinding Parallel and to Thickness.	1118
Pitch Polishing Tool.	1118
Polishing Procedure.	1119
Removing and Cleaning.	1119
Inspecting.	1119

Fine grinding and polishing are distinct operations, but they are related so closely that they are discussed together in this chapter. The term 'flatwork' includes prisms, glass plates (windows, filters, reticles, or mirrors), and the plane surfaces of lenses.

Fine grinding and polishing of flatwork is usually done in multiple, the number of pieces that can be processed at one time depending on their size and shape and the size and weight of the block in which they are mounted. When so processing in multiple, it is necessary to mount flatwork on blocking or angle plates, using plaster of paris, pitch, or wax to hold the elements securely in place.

The optical machinery that is used for the work is discussed in some detail because the same machines can be used for fine grinding and polishing both flatwork and radius work, remembering that usually those used for processing the latter are somewhat lighter in construction (see Chapter 12).

The purposes of fine grinding are to reduce the pits and surface irregularities left by rough grinding so that the polishing operation which follows can be done in a reasonable length of time, to grind the surface of each piece closely to the desired planeness of surface, and to bring the element to the required finished dimension. The fine grinding is done with abrasive and a cast-iron tool, the operating surface of which has been machined and, if necessary, ground and lapped until it is of the required shape and accuracy.

In fine grinding it is important to remember that the surfaces being processed can be damaged very easily by loose particles of grit or dirt and that it may be impossible to remove a deep scratch or pit caused by such particles without grinding a block so much that all the elements on it become too thin to use.

The machine (see Figures 1101 and 1102) is set for the particular operation by adjusting the pressure of the arm on the work, the speed of the spindle, the frequency and length of oscillation, and the location of the center of oscillation. (In this manual, the 'center of oscillation' of the upper unit of the machine is defined as the position of the axis of the 'pin' (see Figure 1101) at the midpoint of the stroke.) The fine-grinding operation is started by placing the tool on the rotating spindle of the machine, applying some abrasive and, holding the block with the hand, lowering it on the tool gently and evenly and moving it back and forth until the abrasive has started to act on the entire surface of the block. This should require approximately 1 minute and is done to remove any irregularity that might exist on the surface.

After this preliminary operation, machine oscillation is started and maintained until the fine grinding is finished. However, it may be necessary to stop the machine and change some of the initial adjustments. The grinding requires from 15 to 45 minutes, with applications of abrasive being made at regular intervals.

After grinding, the block is removed, washed thoroughly to remove all abrasive, and dried. Then the flat surfaces of the elements are inspected, with a magnifier under an electric light, for quality. The flatness or contour of the surfaces is tested by placing a straightedge across them. If the surfaces are scratched or pitted or if the contour is unsatisfactory, the block is re-ground, making any changes in the setting of the machine that may be advisable.

The first step in polishing is to make a polishing tool. This tool is similar to the fine-grinding tool in size and dimensions but has a working surface consisting of a layer of pitch which is applied to the surface of the cast-iron tool. The pitch is prepared for correct hardness at the working temperature. After the pitch has been prepared, it is poured on the plate in a uniformly thick layer and allowed to cool, after which it is beveled and grooved.

In polishing, the block of work is customarily set on the lower spindle (see Figure 1102) and rouge is applied to the surfaces of both the block and the polishing tool. The machine adjustments are similar to those used in fine grinding.

After about 15 minutes of polishing, the block is examined for any defects in the contour of the surfaces of the block or polishing tool. Thereafter, at intervals of about 1 hour, the contour is checked with an optical flat and the polishing tool is re-beveled and re-grooved at the same time. If necessary, the machine

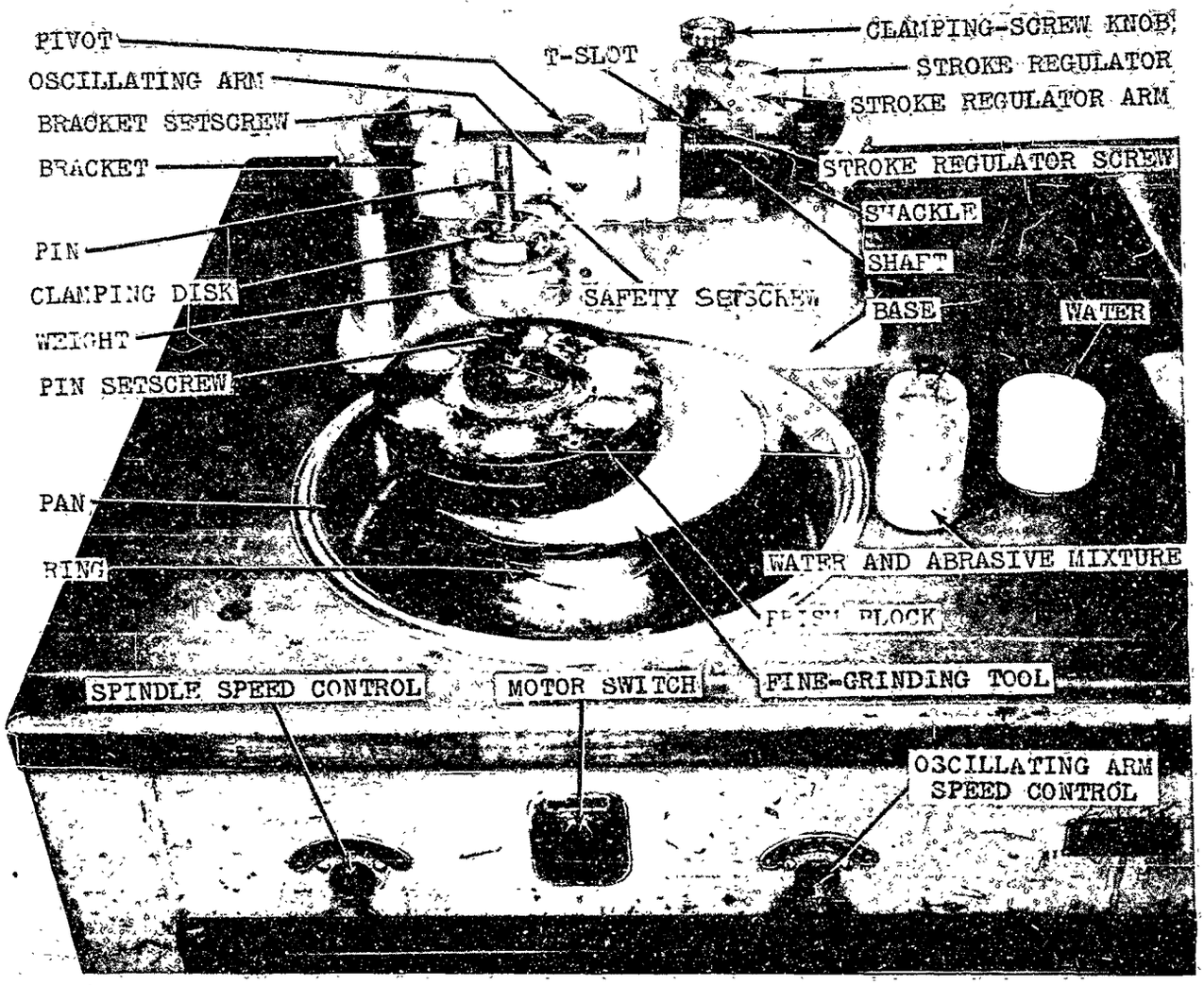

Figure 1101.—Arrangement of Work for Fine Grinding a Block of Prism Blanks.

is re-adjusted before polishing is resumed. On the other hand, if the contour has deteriorated to a large extent, the block is returned for re-grinding.

The polishing is completed when the desired flatness has been produced and the surface is free of 'gray', scratches, pits, and other defects.

FINE-GRINDING AND POLISHING MACHINERY

Fundamentally, the function of a fine-grinding or polishing machine is to provide a mechanism for rubbing an abrasive or rouge on an element or a block of elements. The polishing or grinding tool used must be opposite in curvature to the surface which is to be processed. These machines are made in many sizes, styles, and designs, but practically all are arranged to assure a changing path of contact between the surfaces of the glass and the tool.

The typical machine has a series of two or more power-driven spindles, and, over each spindle, an oscillating upper 'unit'. A setup of at least two spindles is required to fine grind and polish a surface automatically, whether it be single or composite, curved or flat. Some machines are being developed that have lubricant injectors for the polishing and grinding compounds and extra spindles to carry tool truing devices.

The top unit on the majority of standard machines is designed to oscillate from side to

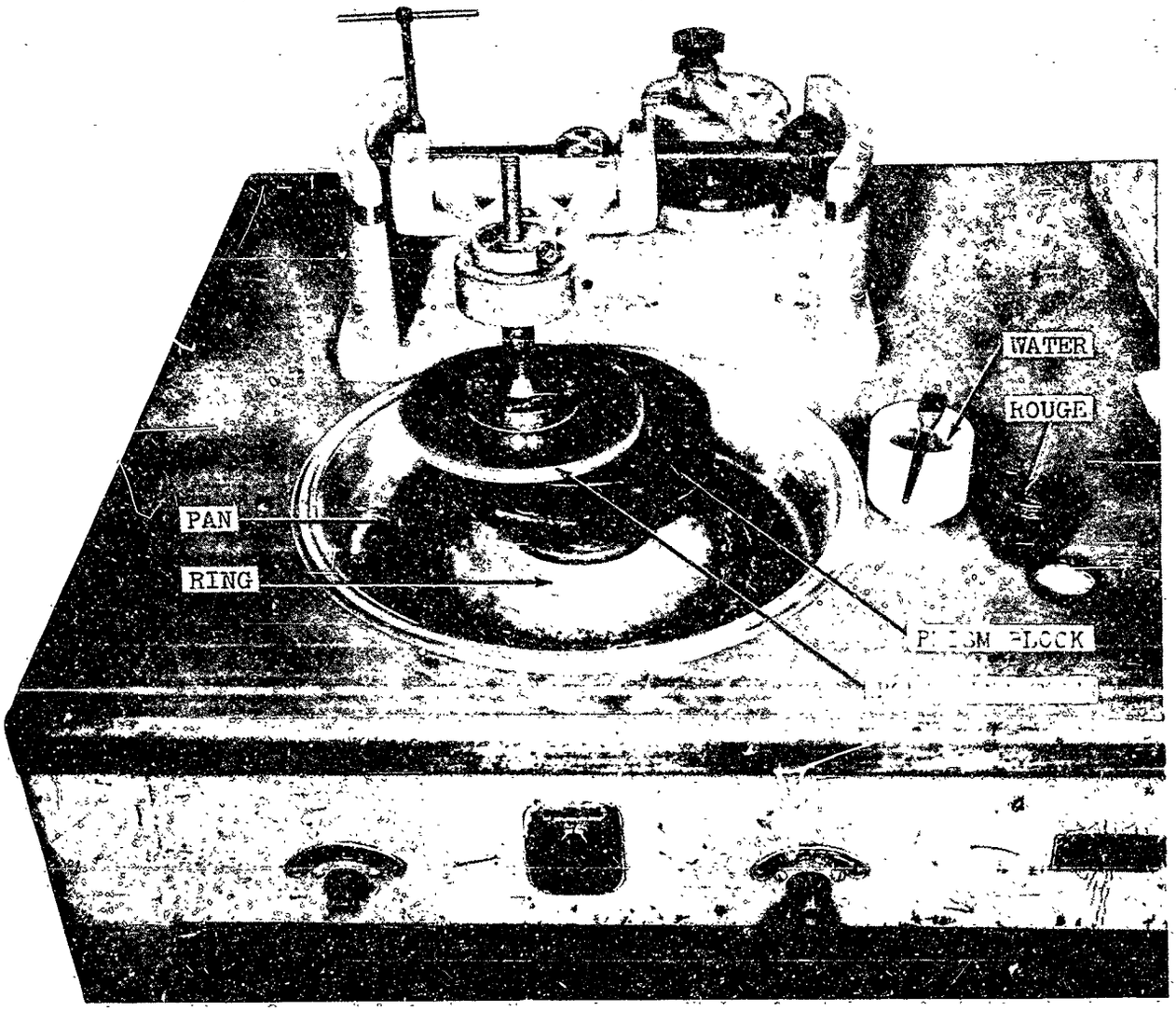

Figure 1102.—Arrangement of Work for Polishing a Block of Prism Blanks. Note that the relative positions of the prism block and polishing tool are reversed as compared with the arrangement for fine grinding shown in Figure 1101.

side, although on some it moves back and forth. On most of the machines, the work or tool mounted in the top unit is rotated by its contact with the tool or work mounted on the power-driven spindle. Special machinery, generally for short radius and small diameter surfaces, has been built with a positive drive on both a lower and an upper spindle, thus causing the tool and work to rotate in opposite directions.

If the top unit oscillates, it must be adjusted so that the path of oscillation of the axis of the 'pin' (see Figure 1101) intersects the projected axis of rotation of the spindle. In addition, the top unit must be designed so that pressure can be applied to the member it is driving, whether it be work or tool. The machine shown in Figures 1101 and 1102 illustrates typical upper and lower 'units'. The single lower unit has a motor-driven spindle, placed near the front of the bench, which rotates in the center of a 'pan' (used for collecting any spillage of water or abrasive) and carries either the block or the tool. The speed of this spindle can be varied, since it is belt-driven by a pair of cone pulleys. Moreover, the motor may be supplied with a speed regulating device, in addition to the customary speed reducer. The top end of

the spindle is provided with an adapter which is screwed on the spindle accurately. The upper end of the adapter is machined to receive the tools and blocks which may be equipped with threads or tapers. In all fine grinding and polishing, the larger member, whether tool or block, is placed on the spindle. The machine shown in Figure 1101 has an abrasive-covered grinding tool mounted on the spindle and an inverted block of prisms mounted over the tool. In Figure 1102 the machine is shown loaded with a block of prisms on the spindle and with the polishing tool working on top.

The upper unit has an oscillating head and arm mounted on a 'base'. An auxiliary spindle in the rear rotates the 'stroke regulator'. The length of the stroke or sweep is set by moving the 'stroke regulator arm', which is held in place by the 'clamping screw' in the T-slot of the stroke regulator.

As the stroke regulator revolves, it moves the 'stroke regulator arm' back and forth. Through the connection at the 'shackle', the 'shaft' is thus caused to oscillate about its 'pivot'. The oscillation is transmitted in turn to the 'oscillating arm' which supports the 'pin', the bottom end of which rests in the tool or in the work block, whichever is on top. (Figure 1102 shows the polishing tool on top.) The location of the 'center of oscillation' is controlled by the position of the oscillating arm on the shaft, which in turn is determined by the location of the 'bracket' which can be moved along the shaft and is held in place by the 'bracket setscrew'.

The oscillating arm should be approximately horizontal when the machine is in operation. This position can be obtained by adjusting the length of the 'pin' and locking it with the 'pin setscrew'. The 'pin' is kept in close contact with the tool by placing a weight or weights on the 'pin' and under the 'clamping disk'. In addition to the adjustments and parts mentioned above, the distance of the 'pin' from the 'shaft' may be varied by moving the rod which carries the 'pin' and which slides in a channel in the oscillating arm. This last adjustment is used when the machine is first installed, to locate the arc of oscillation of the 'pin' so that it intersects the projected axis of rotation of the spindle. Once set, the radius of rotation of the 'pin' should not be changed.

In the lower unit, a 'ring' (see Figure 1102) is screwed in place on the spindle. This 'ring' covers the opening between the spindle and the inside edge of the 'pan' in order to divert any dripping abrasive materials into the pan and away from the bearings.

FINE GRINDING FLATWORK

Grinding Tool.—In fine grinding flatwork, it is extremely important that the surface of the grinding tool be kept optically flat throughout the entire operation, because curvature in the tool will produce curvature in the work. Although a straightedge is used sometimes to determine the flatness of a surface, an optical flat is more accurate. One or the other may be used either on the tool or on the polished glass. When an optical flat is used, the work should be done under a monochromatic light as described in Chapter 22. A small deviation in the surface of either the grinding tool or the work may be corrected by adjusting the machine. However, if the surface of the tool is in such condition that it cannot be corrected on the machine, the tool must be removed and other methods used. One such method is to lap two grinding tools together. A variation in this method is first to make a rough correction with an abrasive stone, as described in Chapter 7, and then lap with another tool until the surface is satisfactory.

A lower member (usually the tool in fine grinding), whose surface has become convex, may be corrected during the grinding operation by making one or more of several adjustments that may be required, see Figure 1103(a). These are: (1) to decrease the speed of the spindle; (2) to increase the speed of the oscillating arm; (3) to adjust the 'center of oscillation' so that it is directly over the axis of the spindle; and (4) to decrease the length of stroke so that the upper member sweeps only a very short distance beyond the outer edge of the lower member. On the other hand, if the surface of the lower member is concave as in Figure 1103(b), the required adjustments are: (1) to increase the speed of the spindle; (2) to decrease the speed of the arm; (3) to move

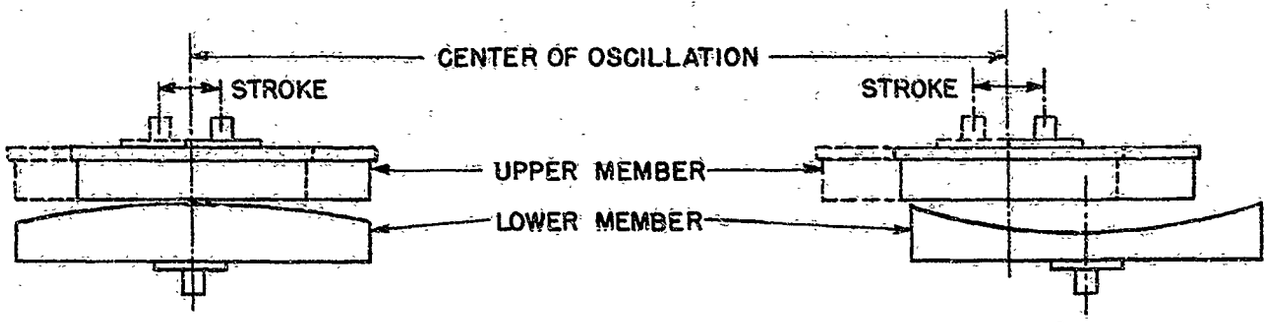

(a) Lower Member Convex

1. Decrease spindle speed
2. Increase oscillating-arm speed
3. Adjust oscillating arm so that center of oscillation lies in axis of spindle
4. Adjust stroke regulator for shorter stroke of oscillating arm

(b) Lower Member Concave

1. Increase spindle speed
2. Decrease oscillating-arm speed
3. Adjust oscillating arm so that upper member sweeps beyond edge of lower member on one side only
4. Adjust stroke regulator for longer stroke of oscillating arm

Figure 1103.—Machine Adjustments for Correcting Deviations from Flatness.

the 'center of oscillation' further to the left of center; and (4) to increase the length of the stroke.

Adjusting the Oscillating Arm.—The factors governing the adjustment of the oscillating arm for fine grinding and polishing are: (1) the diameter of the lower member; (2) the length of the stroke; (3) the location of the center of oscillation.

As stated earlier, the diameter D of the lower member is ordinarily slightly greater than the diameter d of the upper member. The difference between the two diameters is denoted by M.

Three settings of the arm of the machine are shown in Figure 1104, each having an approximate oscillation of $D/4$.

(a) Normal Setting.—To set the oscillating arm to maintain a flat surface, the center of oscillation is put to the left of the axis of the spindle and at a distance from it equal to $D/8 - M/2$. With this setting, the right edge of the upper member will oscillate from the right edge of the lower member toward the center of the latter.

(b) Corrections. — If curvature develops, the center of oscillation should be moved so that it is either directly over the center of rotation of the lower member if the surface of the lower member is convex, or a distance of $D/8 + M/2$ to the left of the center of rotation if the surface of the lower member is concave. With the former setting, *i.e.*, directly over the center of rotation, the center of the block is polished continuously and more glass is polished from that portion, while with the latter setting, the greatest polishing is at the edges and the edges are reduced. If a change in the center of oscillation of the arm does not produce sufficient correction, the next step is to change the length of the stroke itself. It is important to remember that too short a stroke tends to make a concave spot or 'hole' in the center of the block, while a stroke that is too long will bevel the outer edge of it. Bearing this fact in mind, the stroke should be lengthened to correct a concave surface of a lower member, and shortened to improve a convex one. Also, that the stroke should not be changed without first trying the other corrections just mentioned, because it must be returned to its original setting when a new block is started.

The normal speed of the spindle is about 35 rpm with the oscillating arm making approximately 20 strokes per minute.

Selecting Abrasives. — Abrasives with a particle size similar to that of #303, and either #1600 or #2100 are used for fine grinding.

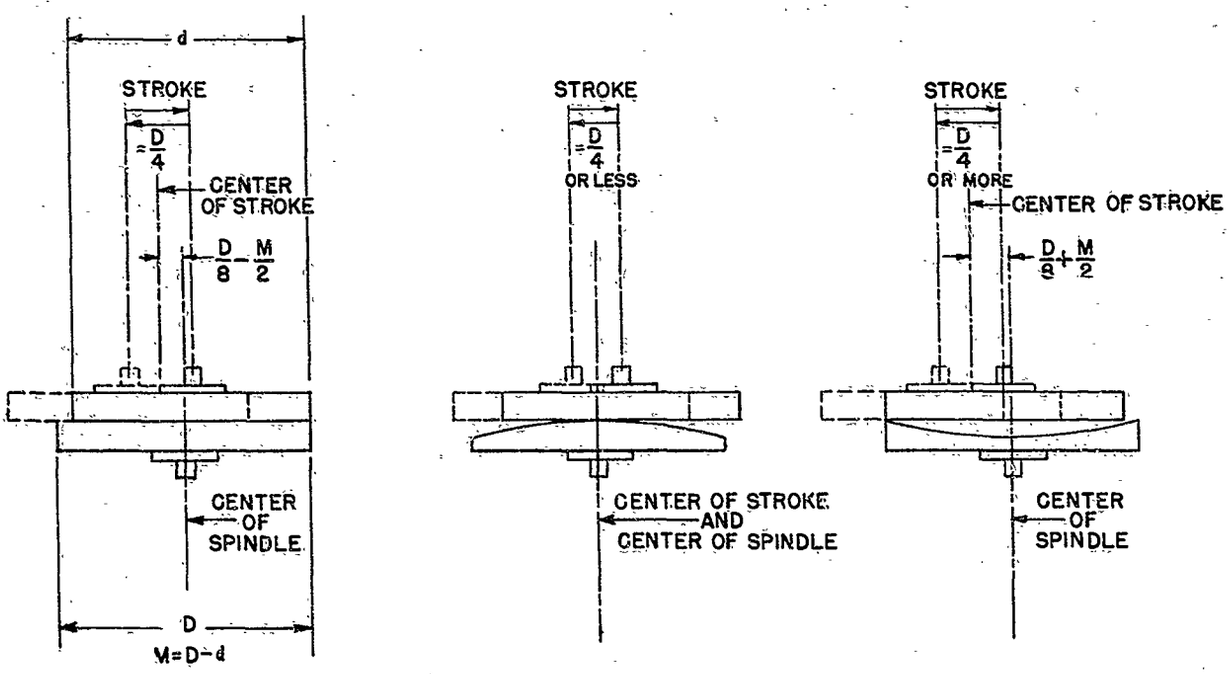

(a) Normal (b) Convex Surface on Lower Member (c) Concave Surface on Lower Member

Figure 1104.—Oscillating-arm Adjustments for Correcting Deviations from Flatness.

The #303 abrasive is used to reduce the elements to within 0.002 or 0.003 inch of the finished thickness and the finer abrasive, such as #1600 or #2100, is used to complete fine grinding. However, if the surfaces have already been hand-corrected with #303 abrasive at the close of the rough-grinding operation (see Chapter 4, *Rough Grinding Prisms by Hand*), the use of this abrasive can now be omitted. It should be noted that the removal of surface also reduces any pits remaining after the rough-grinding operation. However, since the removal of more than 0.004 inch of surface depth should be done with a coarser abrasive than #303, pits of greater depth should be reduced to this depth or less at the close of the rough-grinding operation, or, in any event, before the blanks are blocked for fine grinding.

Grinding Procedure. *Hand Grinding.* — Assuming the tool is the lower member, after the selected abrasive and water have been blended to a fluid consistency, the mixture is applied to the surface of the tool with a small paint brush or by some other suitable means. The care needed when working with the finer abrasives is greater than when the coarser ones are used, because of the closer contact maintained between the glass and the grinding tool. After inverting the block, it is placed on the tool slowly, carefully, and in such a manner that the surfaces of all the elements on the block touch the tool at the same time. Next it is moved by hand across the rotating tool surface for approximately 12 strokes until grinding has started on all glass surfaces of the block. The block is then ready for machine grinding.

Machine Grinding.—One arrangement of a battery of machines for fine grinding is shown in Figure 1105. Before using a machine for fine grinding, some adjustments are necessary. As already stated, these are the pressure of the arm on the work, the speed of the lower spindle, the frequency of oscillation, the length of stroke, and the location of the center of oscillation. For the initial setting: (1) the speed of the spindle and the frequency of oscillation should be at a medium rate; (2) the stroke should be one quarter of the diameter of the tool; and (3) the center of oscillation should be to the left of the center of rotation of the spindle, at a distance equal to one eighth of the diameter of the tool, minus one half of the difference between the diameters of block

and tool. With so many adjustments to make, the initial setting of the machine will seldom produce the desired flatness and therefore some readjustments are usually necessary after fine grinding has started.

The abrasive should be allowed to break down completely during the last few minutes of grinding, and only enough water to keep the surface moist should be added. When the abrasive has broken down sufficiently it will appear on the tool to be almost black. However, it must not be allowed to over-expend itself or to become dry, as numerous scratches will result. Aside from cleanliness, other precautions which should be taken to avoid scratches are to mix the abrasive and water thoroughly and to distribute the mixture evenly on the work.

Inspecting After Fine Grinding.—After the block has been fine ground, it is washed thoroughly to remove all traces of the abrasive and then dried. Next, the block is inspected with a magnifier to make sure that any scratches and pits have been properly reduced.

POLISHING FLATWORK

While all types of flatwork are polished similarly, prisms and reticles each require some special treatment which will be discussed later in this chapter. If the work is done in an atmosphere of filtered air, maintained at constant temperature and humidity, several benefits should result, namely: an increase in the rate of production, an improvement in the quality of accepted pieces, and a smaller percentage of 'rejects'.

Pitch Polishing Tool.—A plate similar to the plates used for fine grinding is set on a tripod, leveled, and the edge rimmed with strips of paper or masking tape to form a mold. Melted pitch is poured onto the plate (usually to a depth of ½ inch), after which a small gas flame is played over the surface to remove any air bubbles that may have risen to the top. The qualities of pitch used to make the polishing tool are discussed in Chapter 25, *Materials*.

After the pitch has cooled, the tape is removed and the edge of the pitch is beveled by hand, using a razor blade or a sharp knife. Then grooves are carved in the pitch as shown in Figure 1106. Many other patterns of grooving, some of which are shown in Figure 1107, may be used, especially for tools that are to be used for polishing reticles and prisms. Operators have developed other special patterns which they find quite effective.

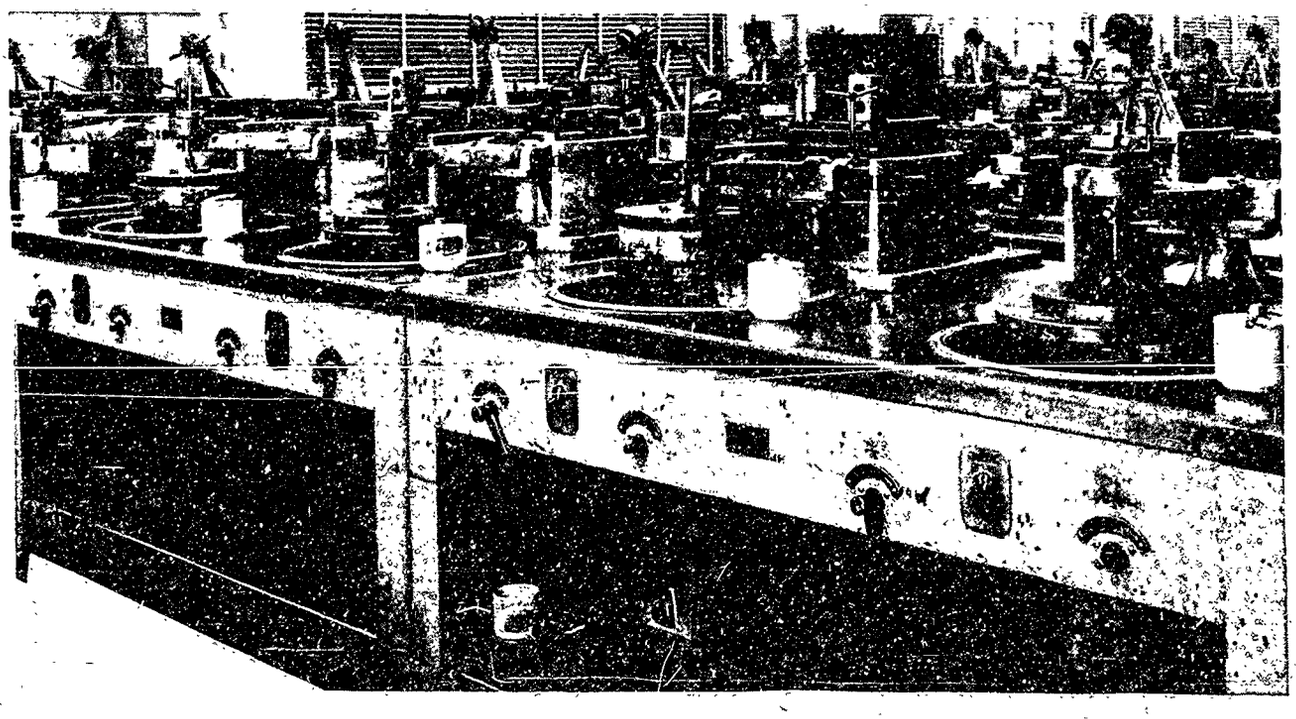

Figure 1105.—Battery of Machines for Fine Grinding Flatwork.

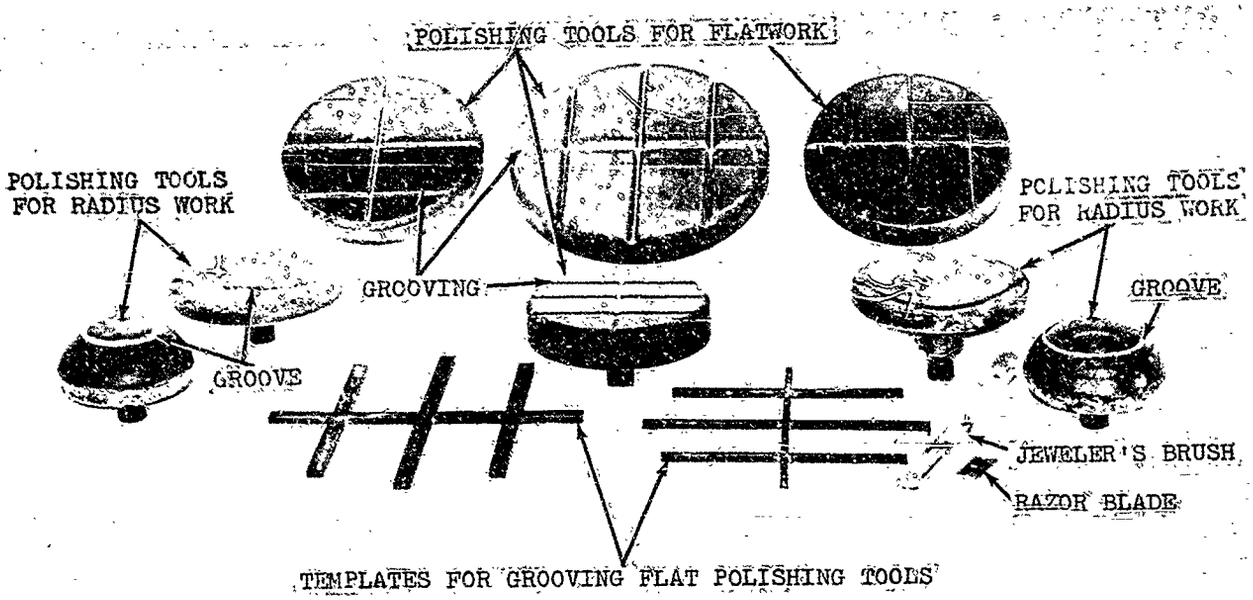

Figure 1106.—Polishing Tools for Flat and Radius Work.

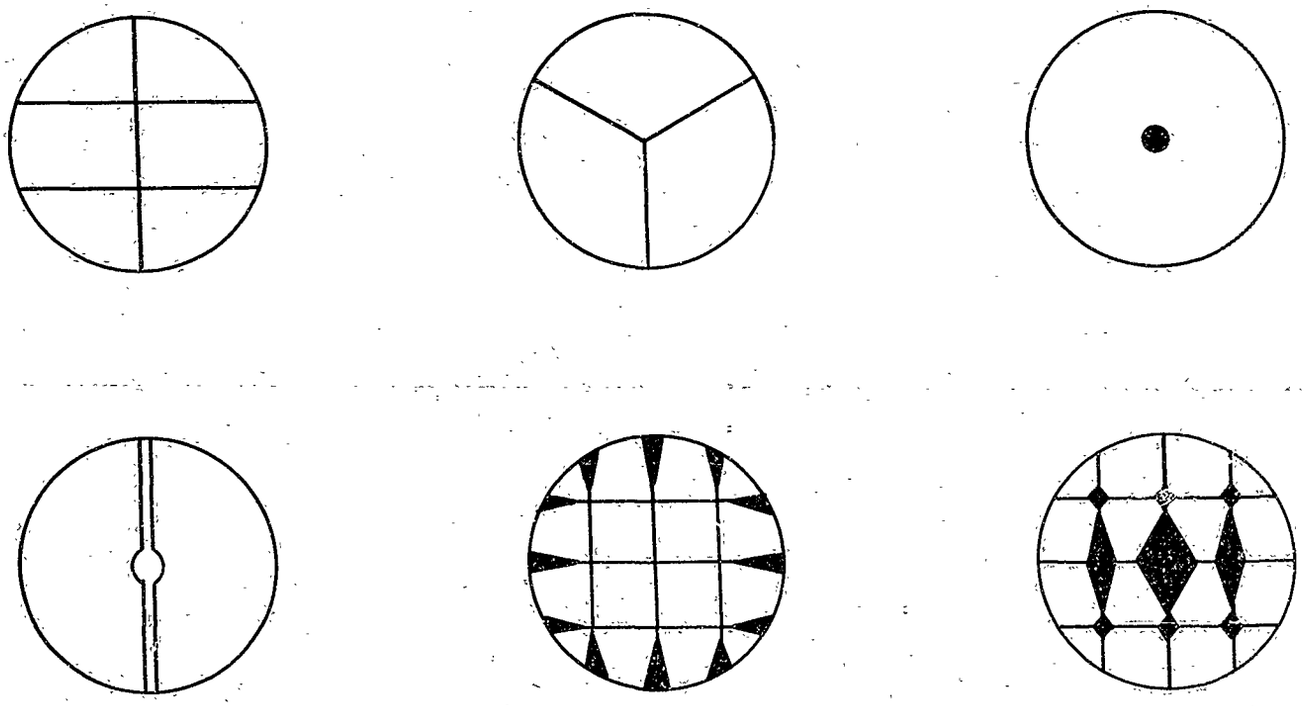

Figure 1107.—Grooving Patterns for Flat Polishing Tools.

Relative Position of Work and Tool. — When polishing flatwork, while it is customary to place the block below the polishing tool, it is not essential to do so, and many operators prefer to polish with the work on top. However, should the block and the tool differ in size, the smaller is placed on top.

Polishing Procedure. — Before the work block is placed on a polishing machine, a battery of which is shown in Figure 1108, the block is washed thoroughly to free it of any abrasive.

Application of Rouge. — Rouge and water are blended into the consistency of a thin paste. A jar of rouge and a container of water are placed conveniently near the spindle. A camel's-hair brush, with a ¾-inch tuft, is moistened in the water, dipped into the rouge, and the mixture applied to the block. After the rouge has been applied, the block will dry gradually as the polishing operation proceeds. The operator should observe this 'drying rate' and vary the later applications of rouge accordingly. For example, if the drying rate is too slow, the amount of rouge per application can be reduced. As the block runs dry, as signalled by a squeaking noise caused by friction between the block and the tool, the action of the polishing tool cleans the surface of the block, and the progress of the drying can be observed by watching the portion of the block that is not covered by the tool. At this point, the surface of the block should be examined carefully. If particles of dry rouge are visible, a brushful of water is added; if no dry rouge is visible, a new application of rouge and water is made. By proper control of the rouge and water applications the squeaks can be made to occur at 2- or 3-minute intervals until the polishing operation is completed.

Some operators prefer to use the rouge mixture quite dry, with the result that the squeaking noise is evident throughout the polishing operation. In following this practice, the operator must avoid an excessively dry condition as tl is may produce straining and create sufficient stress to loosen the elements in the block.

Fitting the Pitch Polishing Tool.—To operate properly, the polishing tool must be 'fitted' to the block, by making its pitch surface conform as closely as possible to the surface of the block. To permit the pitch to move to a fit, the tool is heated slightly either with a bunsen burner or warm water. Next a handle is screwed to the tool for convenience, rouge is applied, and the tool is inverted and placed on the rotating block. The tool then is held by the handle, and oscillated over the surface of the block. A quarter revolution of the tool is

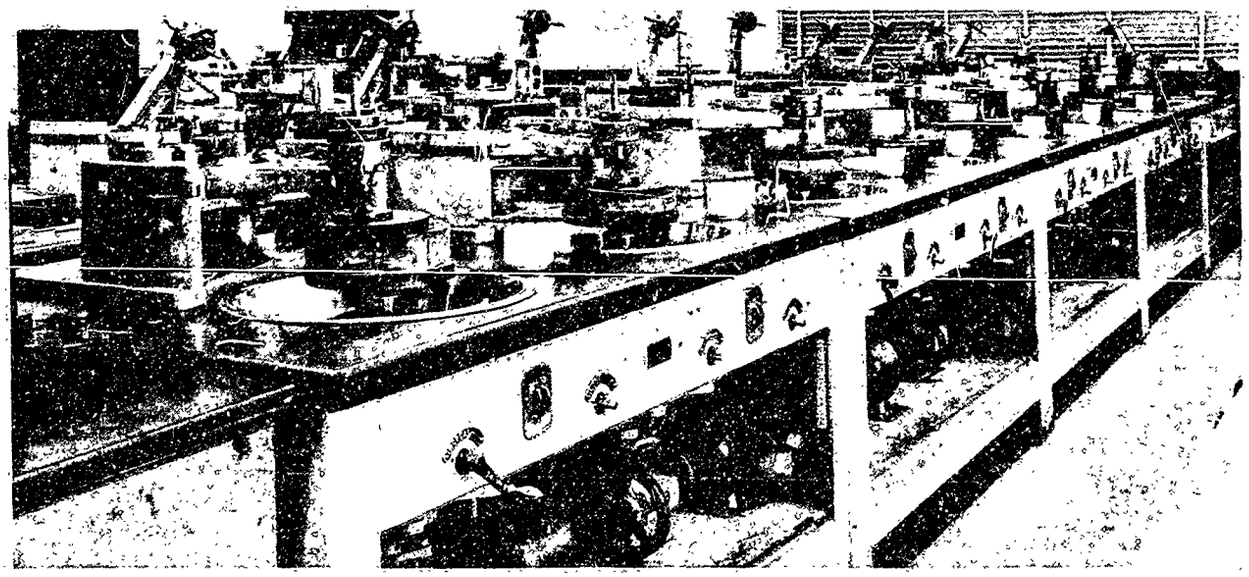

Figure 1108.—Battery of Machines for Polishing Flatwork.

made every little while between oscillations. Fitting is considered to be complete when the friction between the tool and the block becomes so great that it is difficult to rotate the tool with the hand. Machine oscillation is then started.

When the polishing tool is made with a 'normal pitch' (see Chapter 25), the weight on the oscillating arm should be about 15 pounds. The same or a heavier weight should be used with a harder pitch, and a lighter weight with a softer pitch. If the tool oscillates freely across the work without rotating, it is not polishing. This occurs usually when the tool is not fitted properly to the block and hence causes very little friction. Another reason for the tool not 'grabbing' or rotating, is that the combination of rouge and pitch used is not effective. For instance, some rouges form a shiny crust on the surface of the pitch, which causes the tool to slip. Hand pressure on the top of the tool, applied intermittently at the beginning, is helpful in obtaining a good start for the polishing operation.

There is a gradual flow of the pitch when the tool is in use. The purpose of the grooves is to maintain the shape of the tool by directing the flow of the pitch, and to control the distribution of the rouge during the polishing process. If the tool is grooved, the pitch flows in all directions into the grooves. If the tool is not grooved, the pitch will flow toward and beyond its outer edge. As the flow is faster at the edge than in the center the tool will become thinner on the edge, assume a convex shape, and produce a concave surface on the work. The grooves also serve as reservoirs for the rouge, and slowly release it for distribution over the surface of the work. The grooves must be relieved or re-opened from time to time during the polishing operation, as will be described later.

The desired surface is obtained more easily by adjusting the machine properly and by using a polishing tool that has been grooved correctly and made with the proper pitch. If the pitch is too soft, it will bevel or polish away the edge of the work, cause stains, and fill the grooves too quickly. On the other hand, if it is too hard, it may cause light scratches or produce a surface which will show irregular bands when tested with an optical flat. Normally, the time required to fill the grooves should be between 15 minutes and 1 hour.

Adjusting the Oscillating Arm. (a) Normal Setting.—Before polishing starts, the oscillating arm is adjusted to its normal setting as described for fine grinding earlier in this chapter and as shown in Figure 1104.

(b) Corrections. — If the normal adjustment of the machine does not give satisfactory results, the next step is to 'waffle' the polishing tool surface in a pattern designed to correct the condition (see Figure 1109). This waffling usually will be effective if the amount of correction required is not excessive. If further correction is needed, regardless of whether the tool or the block is the upper member, the center of oscillation and the length of stroke should be adjusted as shown in Figures 1103 and 1104. The oscillating-arm stroke for correcting the concave surface of a lower member

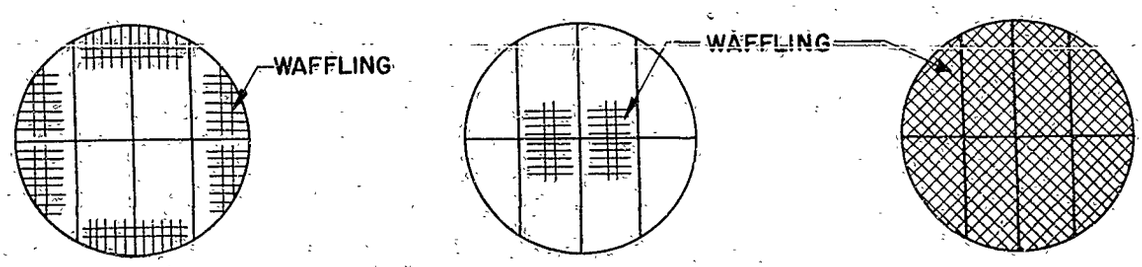

(a) To Correct Convex Surface of Block.

(b) To Correct Concave Surface of Block.

(c) To Correct Irregular Surface of Block.

Figure 1109.—Waffle Patterns for Correcting Deviations from Flatness when Polishing Tool with ½-inch V-shaped Grooves Is Upper Member.

when polishing flatwork is shown in Figure 1110.

Checking the Polishing Tool.—The polishing tool is removed about every 30 minutes to inspect its surface and the grooves. If necessary, the grooves are re-cut and the edge of the tool is re-beveled to restore it to its original diameter. After this the block is washed with a clean sponge dipped into lukewarm water, dried with cheesecloth, returned to the machine and polishing is resumed.

Checking for Flatness. — The block is checked for flatness with an optical flat as described in Chapter 22, after the surface of the block has been washed thoroughly to remove all traces of rouge, and is then dried.

Polishing Time.—Assuming that a block is approximately 10 inches in diameter, that it has been fine ground with #1600 abrasive, and that the operator does his work properly, the average time required for polishing is from 3 to 4 hours. Slightly less time is required for flint glass than for crown glass because the former is a softer glass. It should be noted that 10-inch blocks of flint-glass reticles have been polished successfully, using experimental rouges, in less than 2 hours.

Stains.—Stains often appear on the glass surfaces during polishing. (See Chapter 24.)

Inspecting After Polishing.—After a block has been polished, it is cleaned carefully and is then ready for a final and complete inspection. Besides a check for the desired degree of flatness, using an optical flat, this inspection includes a careful examination, made with a five-power magnifier under a 200-watt clear 'Mazda' lamp, for all grinding pits, 'gray', scratches, and stains.

The use of an optical flat (Figures 1111 and 1112) is described in detail in Chapter 22, and methods of inspection are described fully in Chapter 24.

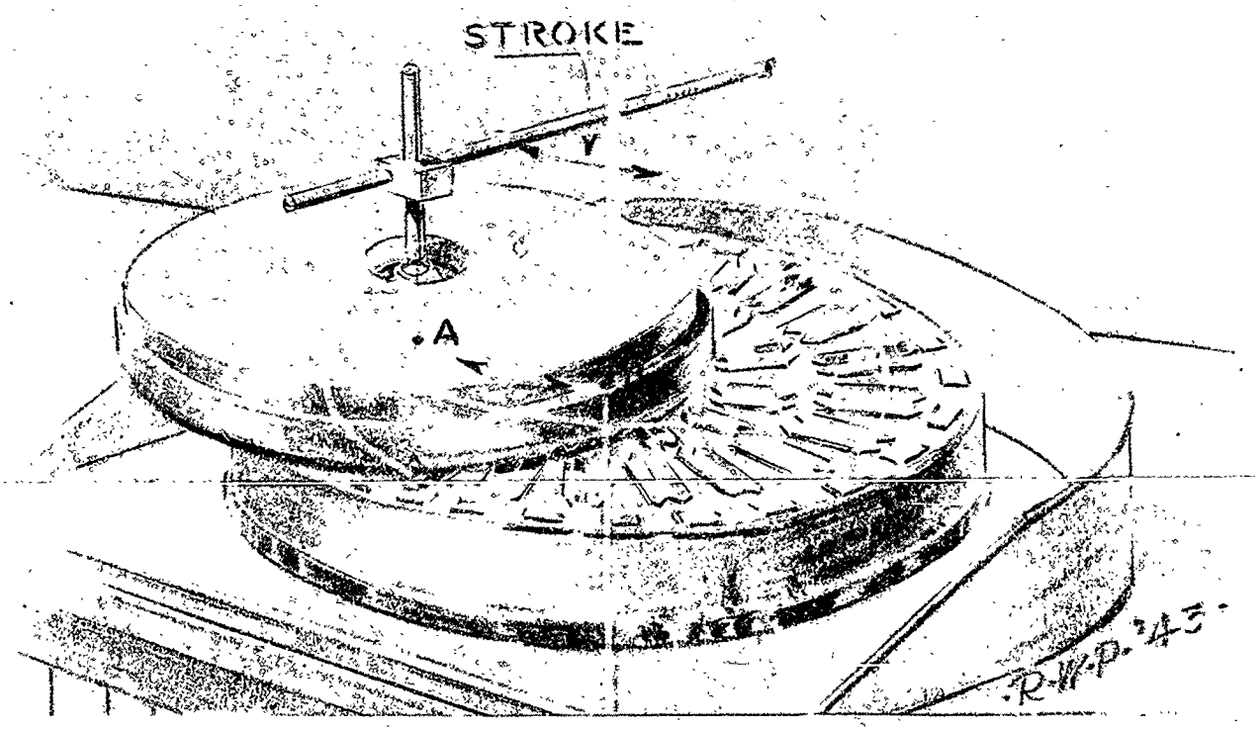

Drawing by Russell W. Porter

Figure 1110.—Oscillating-arm Stroke for Correcting a Concave Surface While Polishing Flatwork.

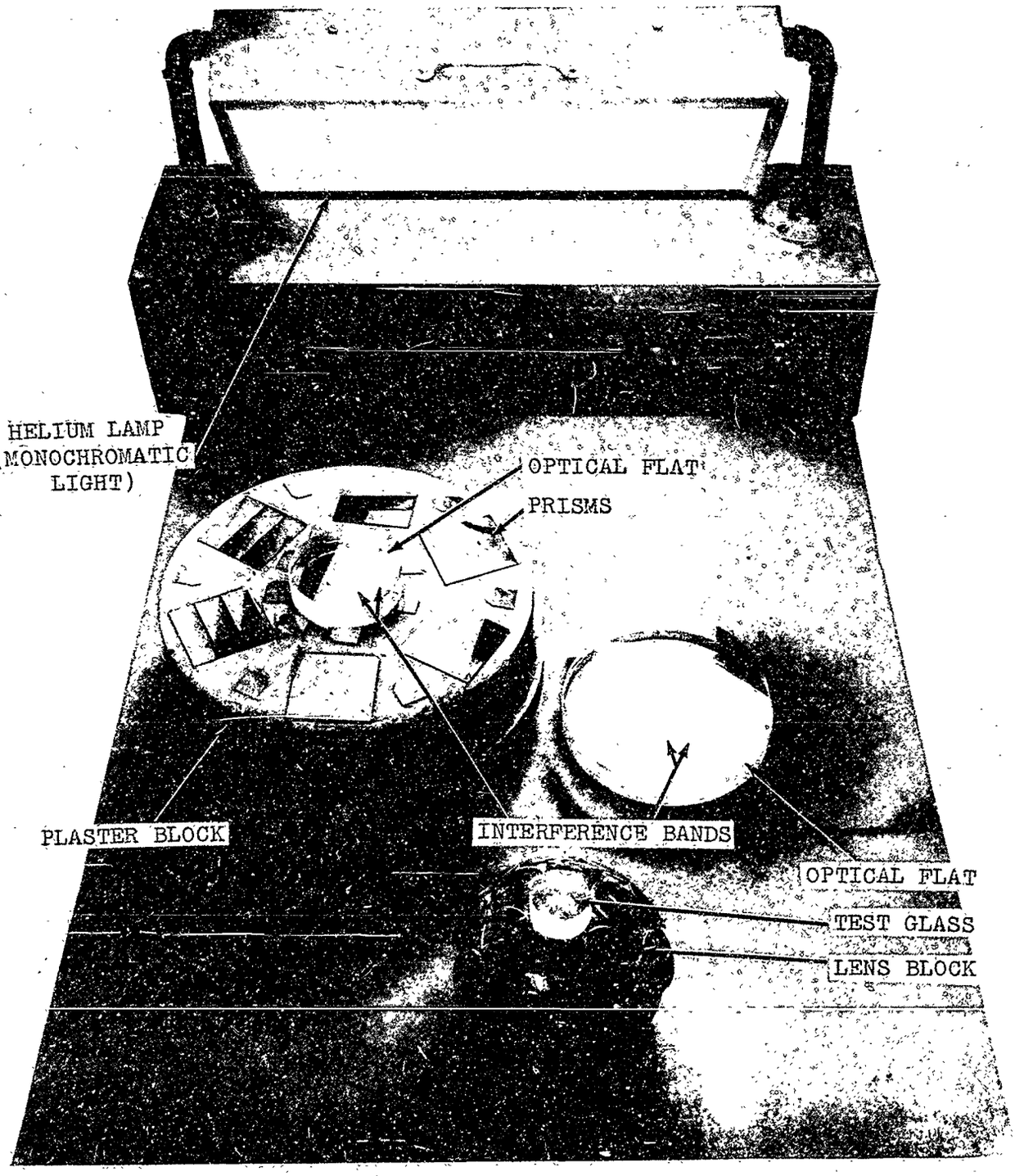

Figure 1111.—Checking Polished Surfaces.

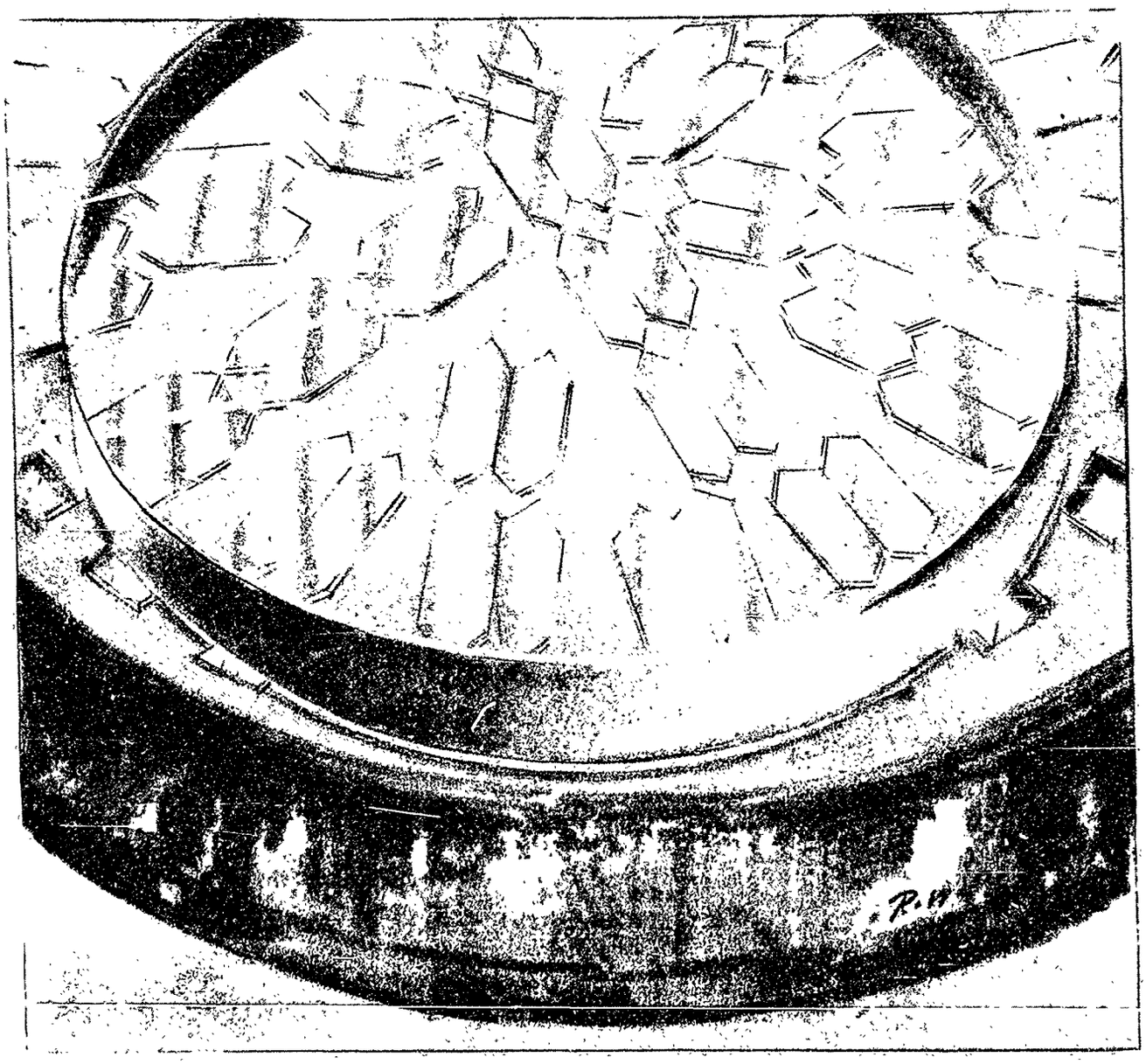

Drawing by Russell W. Porter

Figure 1112.—Correctly-polished Prism Block Showing a Regular Pattern of Interference Bands as Seen when Checked with an Optical Flat.

Special Polishing Methods

Polishing with a Stationary Arm.—A machine with a stationary arm, as shown in Figure 1113, may be used in polishing either flat or spherical surfaces of optical elements. The procedure is the same as when an oscillating arm is employed except for the following: Rouge and water mixture is applied under pressure in a continuous stream. (It should be noted that such a system of continuous flow of rouge and water can be used with the conventional oscillating-arm movement.) More weight on the upper member is needed than with an oscillating arm, because of the steady flow of rouge. The pressure is adjusted by rolling a weight either backward or forward on the stationary arm. The spindle speed is somewhat greater than in the machine with an oscillating arm.

Polishing with a Felt Polishing Tool.—A pitch-impregnated felt polishing tool, as shown in Figure 1114, is in use for polishing some classes of work in blocks up to 10 inches in diameter. It is easier to make and polishes more rapidly than the conventional pitch tool, it does not produce as regular a surface, and it has a tendency to bevel the edges of the work. It should, therefore, be used only where the required quality of the work permits. For example, a felt polishing tool may be used for polishing out gray, and then be replaced by a pitch polishing tool for the balance of the polishing operation. However, the gain in speed on the preliminary operation is at least partly offset by the increase in later polishing time required to reduce any bevel that may have been created.

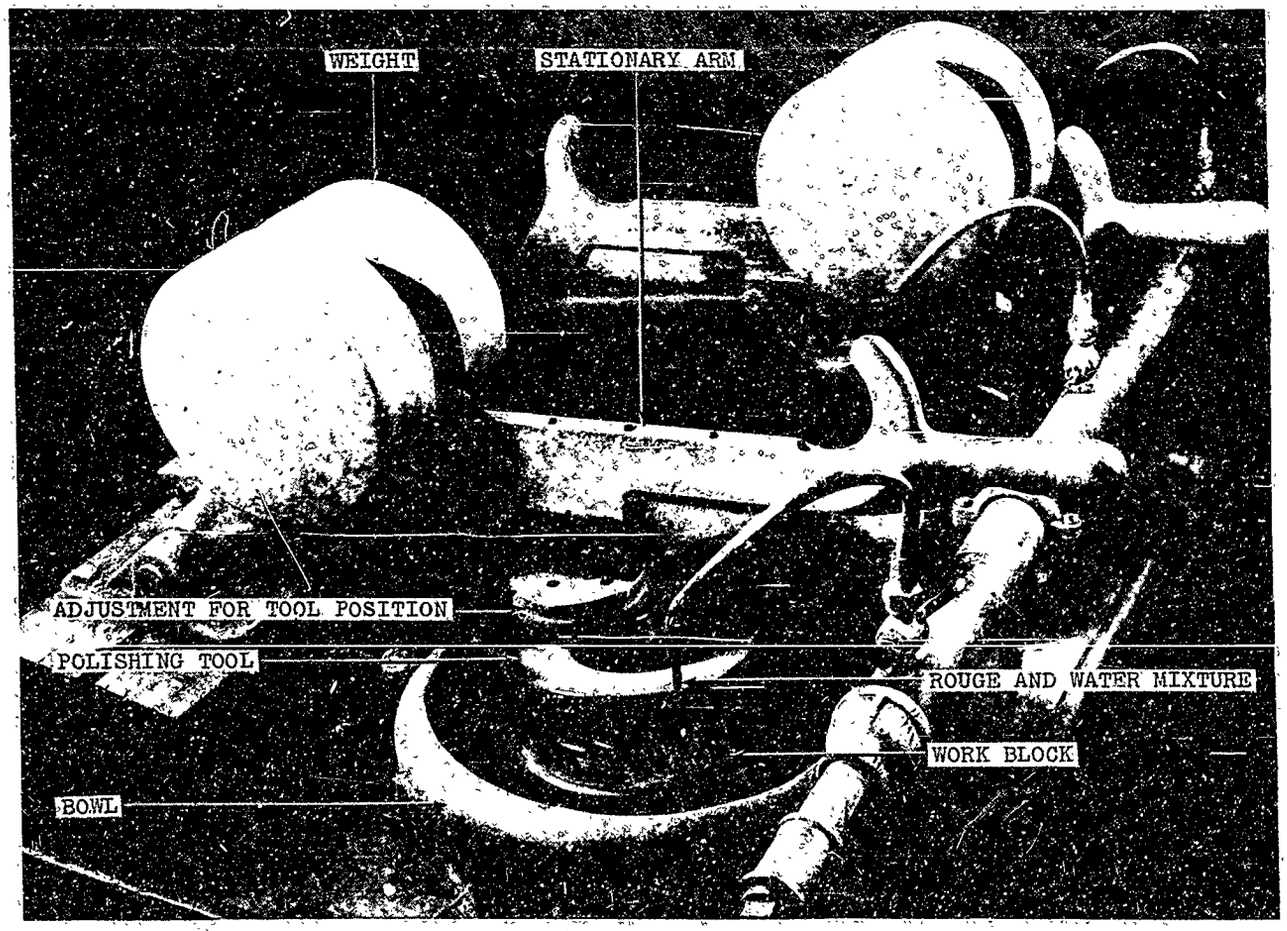

Universal Camera Corporation

Figure 1113.—Polishing Machine with No Oscillating Arm.

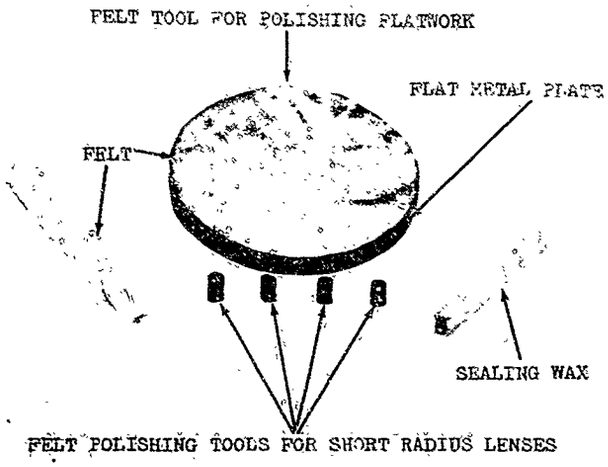

Figure 1114.—Felt Polishing Tools.

To make a felt polishing tool, a sheet of felt is drawn through a mixture of hot pitch slowly and allowed to soak until it is impregnated thoroughly, after which it is drawn through cold water until the pitch becomes hard and stiff. While asphalt combined with other pitches is a common mixture, any number of other combinations may be used. A softer pitch tends to melt easily when it is rotated at high speed.

Disks of the loaded felt of the exact diameter to fit the polishing plate are stamped or cut out. The plate is heated in a flame, a small amount of shellac is applied, and the disk of felt laid on it. Then the plate and disk of felt are heated until the pitch begins to bubble, when another flat plate is pressed against the surface to flatten it.

Next the tool and a block are placed on the machine, rouge is put on the block, and the machine is operated for about 10 minutes. This sets and forms the disk.

FINE GRINDING AND POLISHING PRISMS

Variations from the usual procedure, and special precautions that are necessary when fine grinding and polishing prisms, are discussed below. It is assumed that the prisms are blocked in plaster.

Pitch Polishing Tool.—The diameter of the prism pitch polishing tool is approximately three quarters of the diameter of the prism block. The pitch mixture is harder than that used on tools for polishing other flatwork.

Avoiding Unnecessary Handling of Block.—Since the majority of prism blocks are heavy, ranging from 30 to 70 pounds, some provision must be made for avoiding unnecessary handling. This can be done by placing the polishing tool on top, and using a portable light process inspection for flatness and quality of surface. This procedure will make it unnecessary to remove the block from the machine until an operation has been completed.

Tolerance of Surface Contour.—Prism surfaces are generally held to closer tolerances than are surfaces of windows, filters, or even lenses. Consequently, they are polished at lower spindle speeds and must be checked more frequently. The technique for polishing prisms is more difficult than that for polishing reticles.

The polishing operation should be interrupted regularly to check the work for flatness with an optical flat. If either a high or a low surface is indicated, the polishing tool is waffled, or re-grooved, accordingly. (See Figure 1109.)

Polishing is continued until all pits, gray, scratches, and stains are eliminated and a satisfactory surface has been obtained.

After completion of the polishing process, and before the block is removed from the machine, a protective coating is applied to the finished surfaces.

Loose Prisms.—For various reasons such as faulty plaster, or errors in blocking or polishing, prisms may become loosened in the plaster block. This will make it difficult, or even impossible, to secure satisfactory results. Less weight on the oscillating arm and lower speeds are advisable to avoid such loosening, especially when polishing very small prisms.

Unless a prism is very loose, it is usually impossible to detect any movement until its surface has been partially polished. Then the trouble becomes apparent as soon as an optical flat is placed on the loose prism, as a highly irregular pattern of interference bands is formed. In some cases a loose prism may be detected by placing the optical flat on two or more prisms, leaving a corner of one of the prisms exposed, and applying pressure to the

exposed corner. If there is any movement of the prism, the pattern of interference bands will change.

A block containing a loose prism must be broken apart, all the prisms removed, cleaned, checked for angles, and repaired if necessary, and then re-blocked.

Effect of Temperature.—Prisms blocked in plaster often shift in position slightly if allowed to stand for several hours. Therefore, they should be fine ground and polished as soon as possible after blocking. However, if delay is necessary, they may be blocked and stored for several days before being fine ground and polished provided that, when the work is started, the interval between fine grinding is brief.

Changes in temperature may deform the blocking plate, which in turn will deform the plaster; therefore a uniform temperature should be maintained throughout both the fine-grinding and polishing process. A block of prisms fine ground in one room and transferred to a room of higher temperature for polishing, may acquire a concave surface during polishing, or the block itself may be so concave that the prisms in the center of the block may not be polished at all.

FINE GRINDING AND POLISHING GLASS PLATES

Glass plates are used for many purposes in optical instruments and, therefore, the care that must be used in the manufacture of their surfaces depends on the use to which they are to be put. For example, the degree of parallelism and the finish of the surfaces of some windows is not important. On the other hand, reticles, which are used in the focal planes of instruments, must have surfaces that are flat and parallel to within a few minutes of arc. The methods described in this section are suitable for the manufacture of reticles, but less particular methods may be used with some windows and filters. For elements that require the highest degree of precision in processing, such as mirrors, wedges, and certain windows, the procedures described in Chapter 16 will give results that are more satisfactory.

Reticle blanks when ready for fine grinding and polishing, should have been rough ground with FFF abrasive to a reasonably uniform thickness of 0.010 inch to 0.015 inch greater than the finished dimensions as outlined in Chapter 6, and should be mounted as described in Chapter 9.

Grinding Parallel and to Thickness. — Abrasive #303 or its equivalent (see Chapter 25), is used to bring the work to within 0.002 to 0.003 inch of the required thickness for the side being ground, after which the work is finished with abrasive #1600 or its equivalent.

After #303 abrasive has been applied, the work is ground by machine for approximately 2 minutes. Then the block is removed, the surfaces are cleaned and inspected for quality, and a preliminary check for parallelism is made by measuring the 'markers'. If they are found to be of uniform thickness, grinding by machine is continued, but should the markers show a variation in thickness, hand grinding is necessary.

To restore parallelism, a handle is threaded to the boss on the block, the thinner area of the block is held in a stationary position near the center of the revolving tool, and the thicker area is manipulated by hand on the outer portion of the tool. The outer edge of the tool is used to remove excess stock because the cutting power is greater in that area due to the relatively greater velocity.

When the correction for parallelism has been completed, machine grinding with #303 abrasive is resumed and continued until the desired thickness for this side has been reached. The block is checked again for parallelism before grinding with #1600 abrasive and, if necessary, final corrections are made either by hand grinding, or both. Next, the block is fine ground with #1600 abrasive by the same method as described above for grinding with #303 abrasive. When the block has been ground as required for this side and is free of scratches, pits, and so forth, it is ready for polishing.

Pitch Polishing Tool.—The diameter of the pitch polishing tool used in reticle polishing is the same as that of the block of reticles. A soft

pitch is used in order to reduce the possibility of scratching.

Polishing Procedure. — The procedure for polishing is the same as for general flatwork, as described previously in this chapter.

The reticle blanks are transferred to the second side as described in Chapter 9, after the first side has been polished satisfactorily.

The procedures for fine grinding and polishing the second side are the same as for processing the first side.

Removing and Cleaning. — After heating the block sufficiently to permit easy removal, the paper (see Chapter 9, under "Transferring Glass Plates"), with the reticles adhering to it, is slid off the blocking plate and placed either in a pan of solvent to soak, or in a rack and cleaned in a degreaser with trichlorethylene. Next the reticles are taken off the paper one at a time and again either allowed to soak in a clean solvent or placed in a degreaser to remove any remaining adhesive. In cleaning, as in all operations, the elements should be handled with extreme care and as little as possible to reduce rejections due to pits, scratches, or other damage.

Inspecting.—After cleaning, the reticles are placed in pans in layers separated by tissue paper, and are covered with alcohol until ready for inspection. Then each reticle is removed from the alcohol, dried, and inspected for any defects that may not have been visible while the reticles were mounted, or for any defects that may have been caused by handling.

Many of the causes for rejected reticles can be traced to unclean working conditions—such as dirt, grit, dust, or the like on benches and machines—that either affect the reticles directly or enter into the process and thus mar the work.

After inspection, those found satisfactory are wrapped carefully for storage.

CHAPTER 12

FINE GRINDING AND POLISHING LENSES

	Page No.
Machinery and Tools Used.	1203
Machines.	1203
Fine-grinding Tools.	1206
Convex Work.	1206
Concave Work.	1207
Polishing Tools.	1209
Convex Work.	1209
Concave Work.	1209
Relative Position of Work and Tool.	1209
Convex Work.	1209
Concave Work.	1209
Short Radius Work.	1209
Fine-Grinding Operations.	1210
Convex Work.	1210
Mounting the Lens Block.	1210
Adjusting the Oscillating Arm.	1210
Grinding Procedure.	1211
Concave Work.	1211
Polishing Operations.	1211
Preparing Pitch Mixture.	1211
Pitch Polishing Tool.	1211
Convex Work.	1211
Concave Work.	1212
Polishing Procedure.	1212
Correcting the Surfaces.	1217
Felt Polishing Tool.	1218
Short-radius Work.	1218
Blocking Singly.	1219
Convex Work.	1219
Concave Work.	1219

	Page No.
Machines.	1219
Fine-grinding Tools.	1219
Polishing Tools.	1220
Curvature of Special Tools and Shells.	1220
Blocking and Polishing Shells.	1223
Blocking Shell.	1223
Polishing Shell.	1223
Tools and Locating Shells.	1223
Convex Work.	1223
Concave Work.	1223
Variation with Operator.	1224
Variation with Angle of Aperture.	1224
Determining Curvature.	1224
Checking Radius of Curvature.	1224
Rough-ground Lens Blank.	1224
Locating Shell Available.	1224
Fine-grinding Tool Available.	1224
Neither Locating Shell nor Fine-Grinding Tool Available	1224
(a) Using a Finished Radius Gage.	1224
(b) Using a Dial Spherometer.	1224
Locating Shell.	1225
Fine-grinding Tool Available.	1225
Fine-grinding Tool Not Available.	1225
(a) Using a Locating Shell as a Fine-grinding Tool.	1225
(b) Using Test Glass on Locating Shell.	1225
Fine-grinding Tool.	1225
Locating Shell Available.	1225
Locating Shell Not Available.	1226

The methods, abrasives, and rouges used for fine grinding and polishing lenses are largely the same as those used for processing flatwork as described in Chapter 11. To avoid repetition, therefore, this chapter will discuss chiefly only methods and tools which are peculiar to radius work. Similarly, it will be assumed that the operations of rough grinding and blocking lenses, as described in Chapters 7, 8, and 10 will have been completed satisfactorily and that the elements are ready for fine grinding and polishing. It is important to realize that production of good work in fine grinding and polishing depends greatly upon the accuracy of the rough-grinding operations. The machinery and tools used in fine grinding and polishing, and the processes themselves, are discussed in considerable detail because the work is very precise and special precautions must be observed if the results are to be satisfactory.

The essential difference between plane and radius polishing lies in the preparation and maintenance of the spherical tools that are required for the latter class of elements. For this reason particular attention is given to the tools, and to an explanation of the relations which they bear to each other and to the finished element.

Lenses can be mounted and processed either singly or in multiple. When the work and the grinding tool have been placed on the machine, a mixture of abrasive and water is applied with a brush. The initial grinding is done by hand in order to determine where grinding is taking place and to reduce the possibility of damaging the work should the mounting of the lenses on the block, or the curvature of the tool, be incorrect. After a minute or two of grinding by hand, the oscillating arm may be attached and mechanical grinding commenced. The center of oscillation is determined by adjusting the lateral motion of the arm and the amount of oscillation is regulated by means of the eccentric.

With proper working conditions and if care is taken to replace broken-down abrasive with fresh applications, the time required to grind a block of lenses with a radius of curvature of about 3 inches and a large aperture is approximately ½ hour. To inspect the progress of the work, the unit is shut off, and the work is removed and washed. This washing should be done thoroughly to remove all abrasive, using a sponge, brush, or other cleaning aid. Next the surfaces of the lenses on the block are examined with a magnifying glass under a shaded light for completeness of grinding, and for pits, scratches, gray, and other defects. When the block is ready for polishing, the polishing tool must be made—unless it is already available. Next, the elements and the polishing tool are mounted on the polishing machine, rouge is applied, and the polishing started. From time to time during this operation, the grooves of the tool are re-cut, the tool is waffled, if necessary, and the progress of the work is observed by examining the element with a test glass and a magnifier.

MACHINERY AND TOOLS USED

Machines

The machines used for fine grinding and polishing, and their principles of operation, are the same as those used in processing flatwork. (See Chapter 11.) Both fine grinding and polishing may be done on the same machine, although possibly operating with different speeds and adjustments. In fact, some manufacturers, especially in the case of small lenses blocked singly or in small multiple lens blocks, grind and polish on adjacent spindles on the same machine. However, the practice is not general, because of the danger that abrasives may contaminate the polishing material. The ratio of the number of grinding to polishing spindles depends on the relative length of time required for the grinding and polishing cycle.

Usually several operating units are mounted on a bench-like support similar to those shown in Figure 1201. This figure illustrates four-unit, or, as they are called, four-'spindle' machines so mounted. In the four-unit machine, a single 'unit' consists of the motor-driven vertical spindle near the front of the bench, together with an auxiliary spindle in the rear and the system of eccentrics, levers, and shafts that control and guide the block, grinding tool or polishing tool, whichever is concave. Another machine, which has eight units or 'spindles' on one bench, is shown in Figure 1202, and a

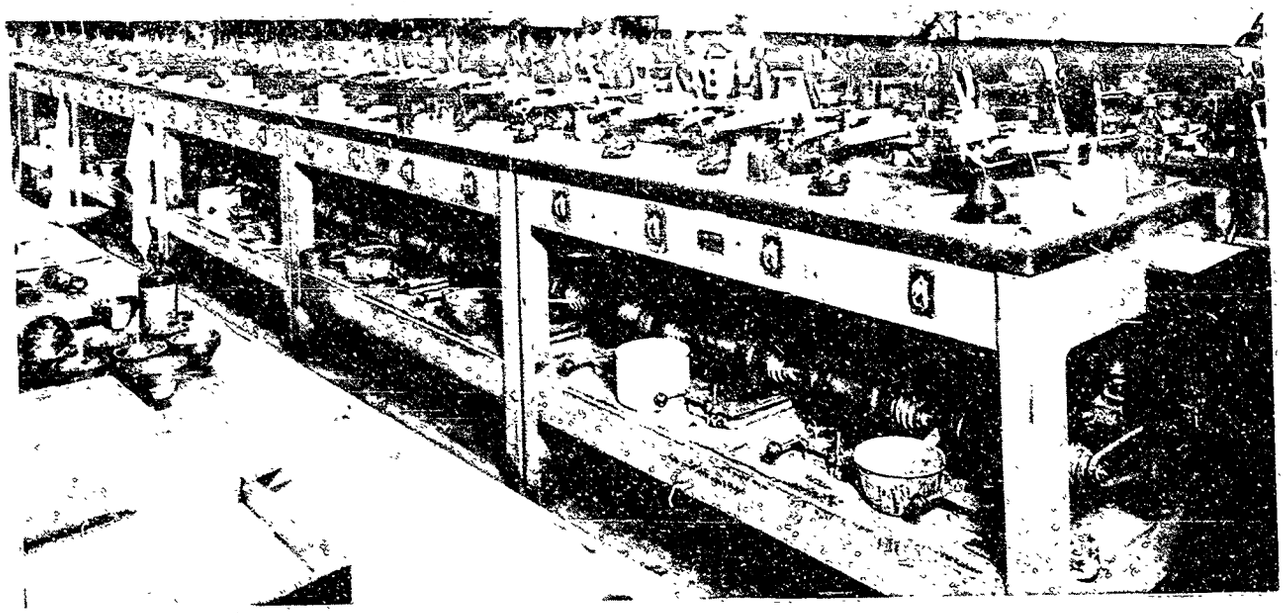

Figure 1201.—Four-spindle Machines for Fine Grinding and Polishing Single Lens Blanks or Medium Size Blocks of Lens Blanks.

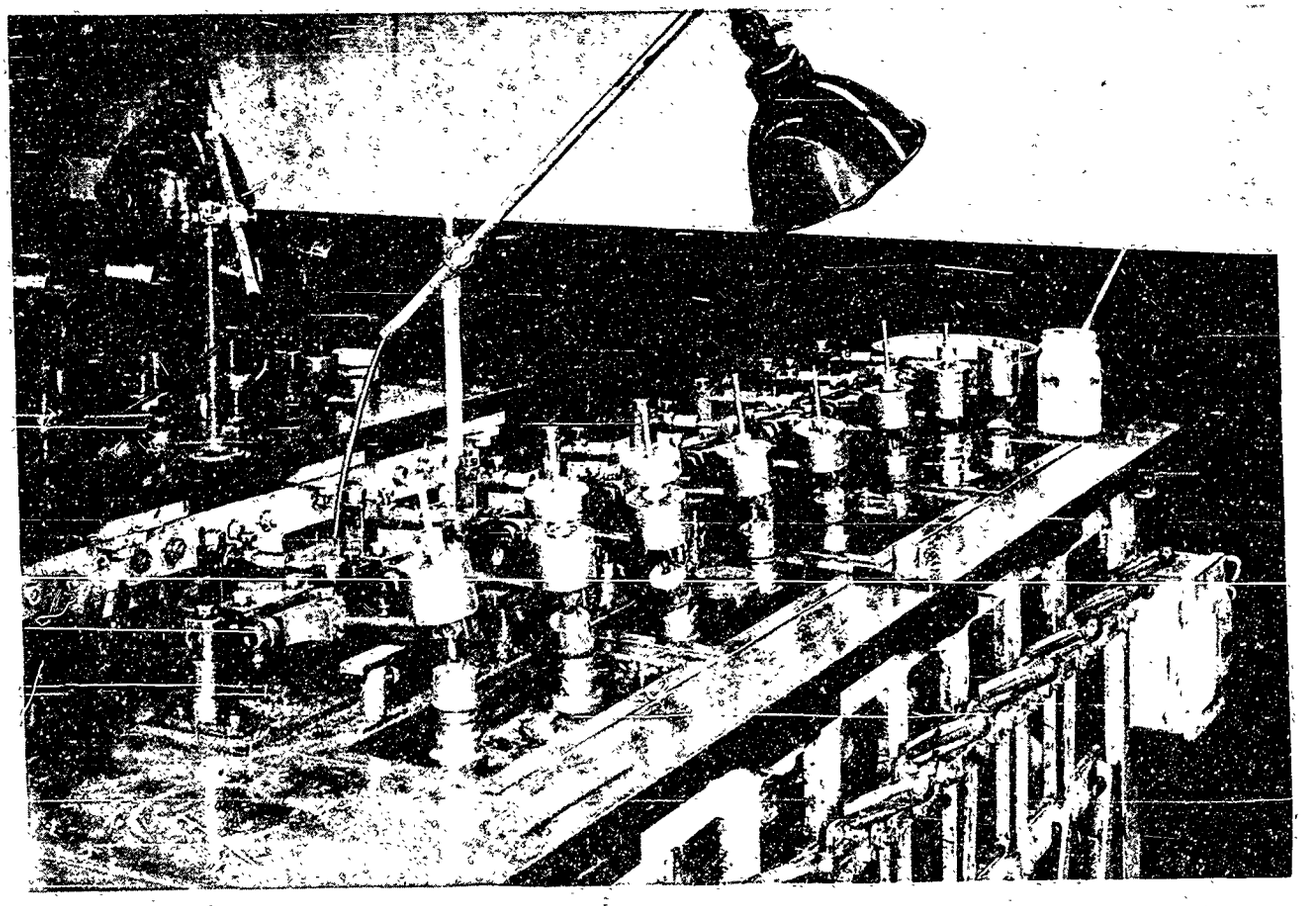

Figure 1202.—Eight-spindle Machine for Fine Grinding and Polishing Lens Blanks Singly or in Small Blocks.

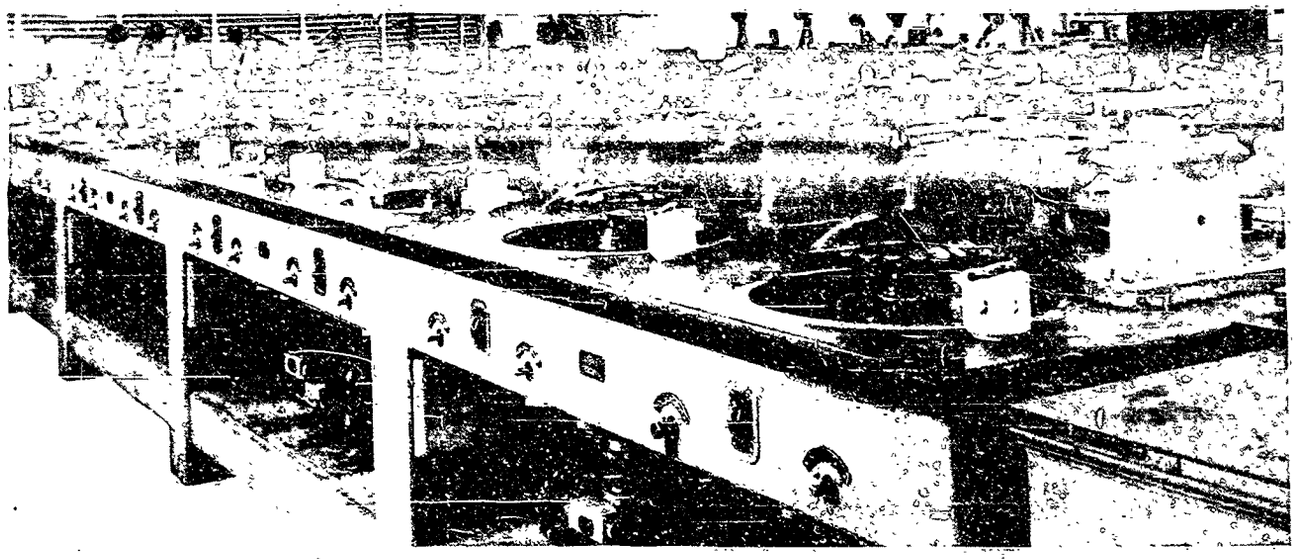

Figure 1203.—Two-spindle machines for Fine Grinding and Polishing Large Blocks of Lens Blanks.

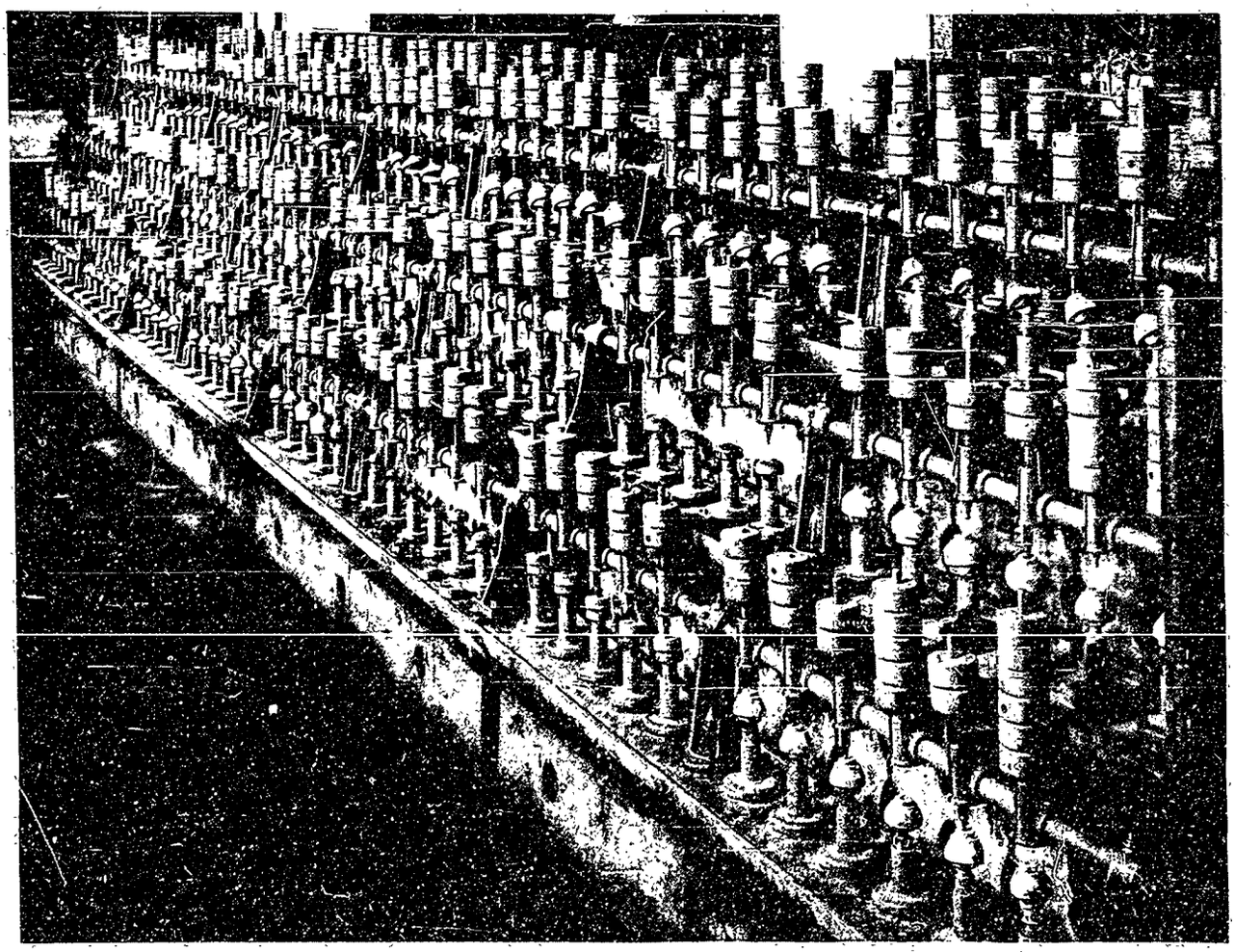

Eastman Kodak Company

Figure 1204.—Triple-row Polishing Machine with 264 Spindles.

heavier one with but two 'spindles' is illustrated in Figure 1203, but all operate on the principles already described in Chapter 11. Machines of somewhat different design, used by Eastman Kodak Company, are shown in Figures 1204, 1205, 1206, and 1207.

Fine-grinding Tools

Convex Work. — Convex lens blanks are ground with a concave grinding tool, the radius of which is slightly less than the radius of curvature of the work, because fine grinding is done from the outside of the block toward the center. The principal reason for grinding from the edge inward is that the upper, or floating, member starts rotating immediately. If grinding is started from the center outward, the initial bearing surface of the upper member is so small as compared to the area of its whole surface and so close to its own center that while the upper member will oscillate it cannot rotate.

In all fine grinding and polishing, the inside diameter, or aperture, of the top member should be smaller than that of the lower member. In other words, when the upper member is placed on the lower member with both axes in coincidence, the upper member should not completely cover the lower member, but should expose a certain amount of surface of the lower member. For example, in fine grinding convex work blocks of approximately 3-inch radius of curvature and almost hemispherical shape, the grinding tool is designed so that when superimposed on the work with both members in a vertical position its edge will be about ¼ inch above the bottom edge of the bottom blanks. The difference in diameter is increased for an

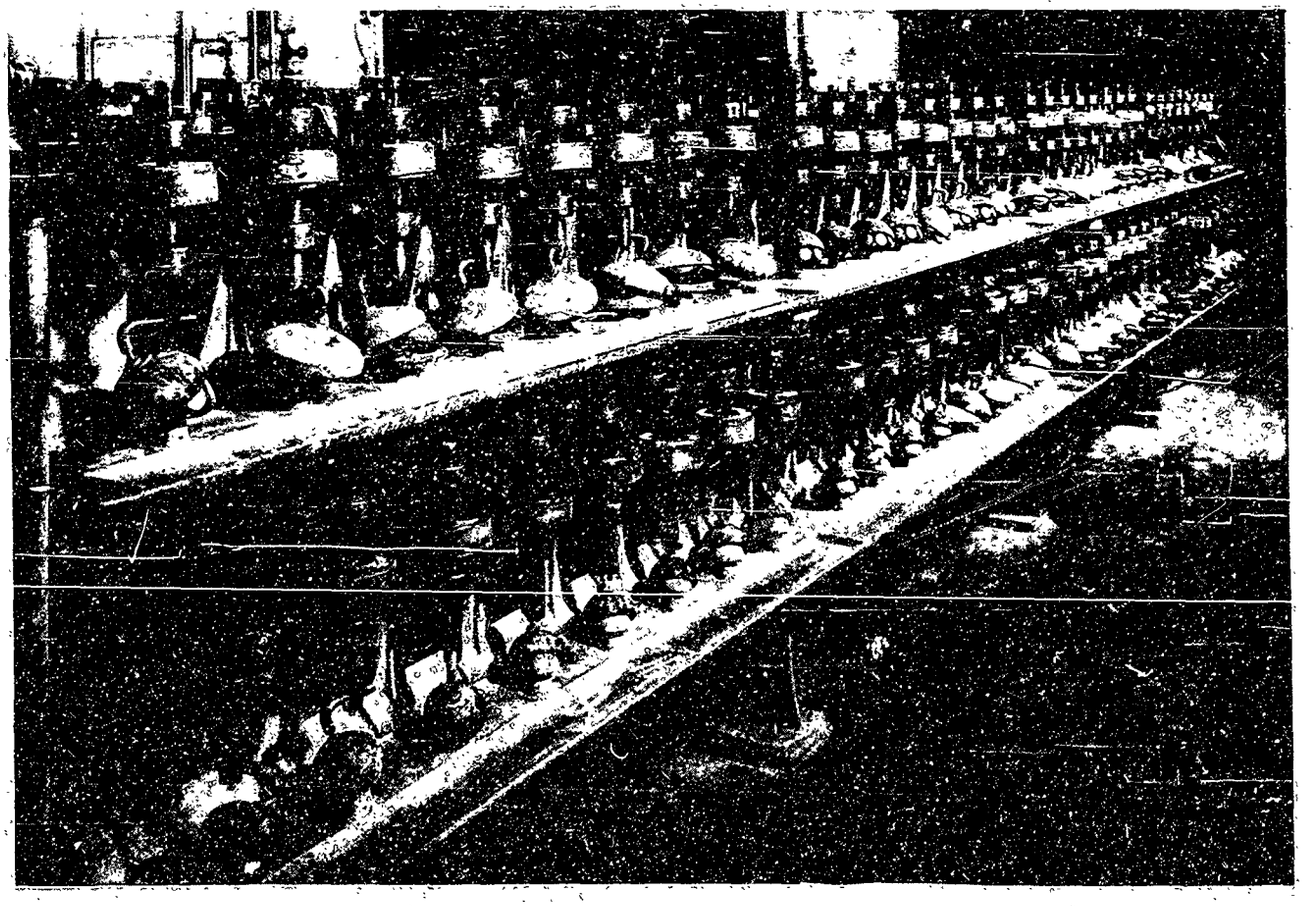

Eastman Kodak Company

Figure 1205.—Double-row Polishing Machines with 128 Spindles.

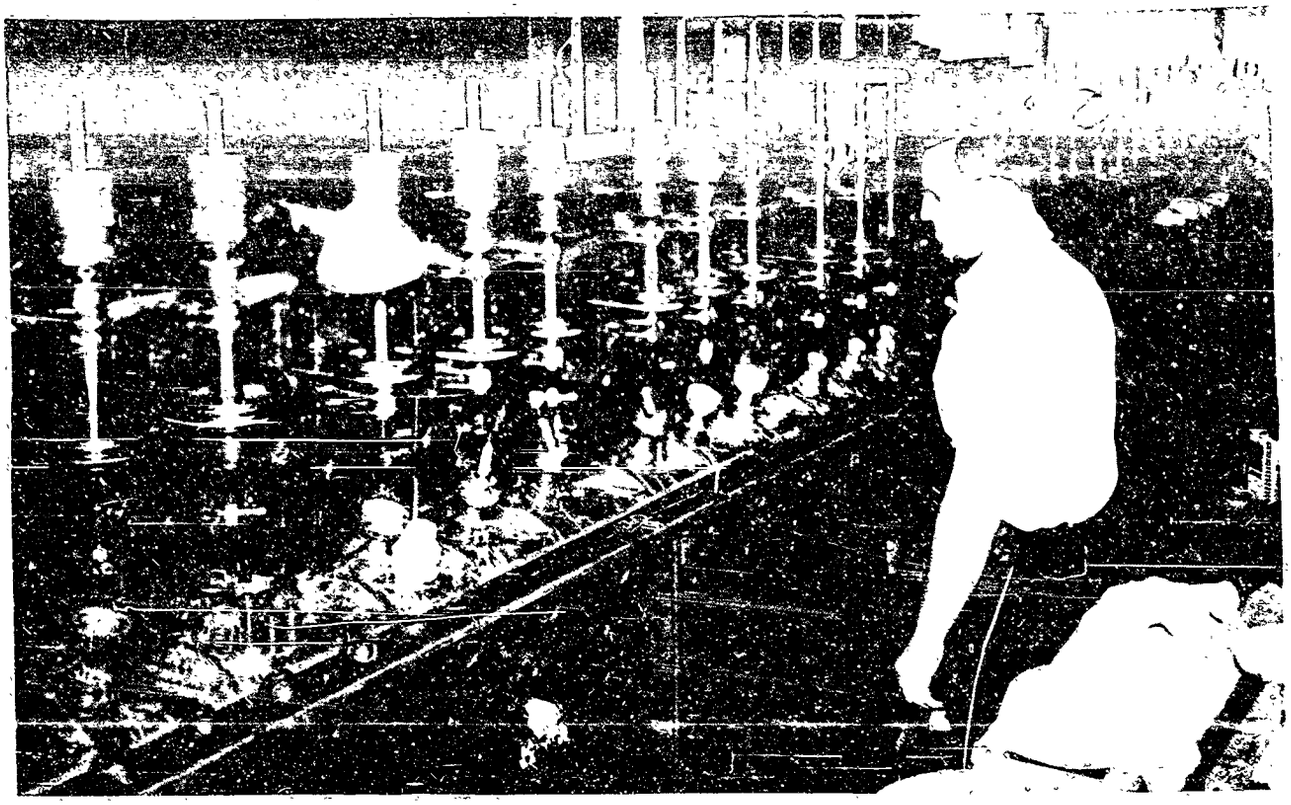

Eastman Kodak Company

Figure 1206.—Polishing Machine with 30 Angular Adjustable Spindles.

increase in the radius of curvature and aperture, and is reduced for a decrease in the radius of curvature and aperture. The difference in diameter of the members is necessary to produce the desired curvature. The oscillation of the upper member moves its central portion away from the slower-moving central portion of the lower member and toward the faster-moving and faster-cutting outer areas. If both members are of the same diameter, the cutting action at the end of the stroke is excessive and thus causes excessive wear at the center of the upper member. If allowed to continue, control of curvature will become more and more difficult as the radius of both members will become ever shorter.

Figure 1208 shows diagrammatically why it is desirable to have a longer radius in a work block supporting convex lenses than in the tool with which the fine grinding is done.

When making or reshaping any tool, the radius of curvature of the surface should be uniform. When the radius of a concave tool is greater near its edge, the effective surface of the tool will be reduced. The desired difference between the edge of the tool and the bottom edge of the bottom blank may still exist, but the difference between the edge of the *effective* tool surface and the edge of the work block will be excessive, and control of curvature will be most difficult.

Concave Work.—Grinding of concave lens blanks is done with a convex grinding tool. The radius of curvature of the grinding tool is longer than that of the work on the block, so that the grinding will be done from the edge of the block of work toward its center. As with convex work the aperture of the upper member, in this case the work, should be less than that of the lower.

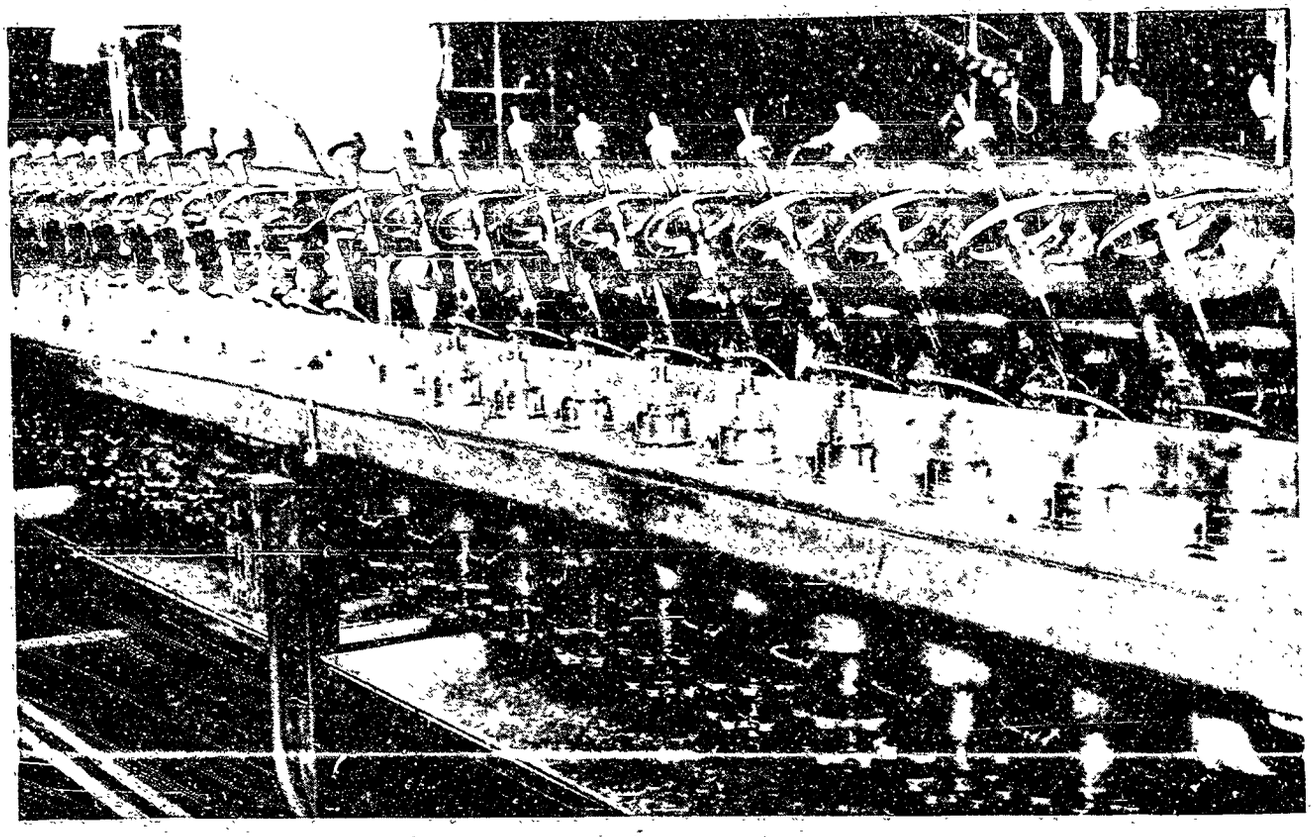

Eastman Kodak Company

Figure 1207.—Oscillating-arm Polishing Machine with 20 Spindles.

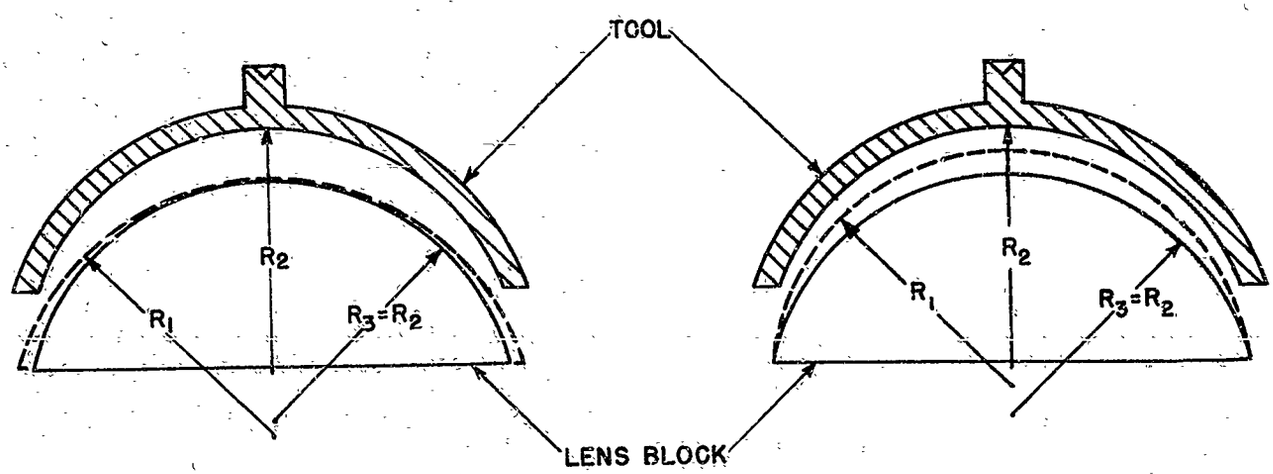

(a) Original Lens Block Low to the Tool
Radius of original lens block (R_1) is longer than radius of tool (R_2) or radius of finished lens block (R_3). Therefore, most of fine grinding is done at *outer edge of block* where action is *quickest* and control is *easiest*.

(b) Original Lens Block High to the Tool
Radius of original lens block (R_1) is shorter than radius of tool (R_2) or radius of finished lens block (R_3). Therefore, most of fine grinding is done at *center of block* where action is *slowest* and control is most *difficult*.

Figure 1208.—Diagram Showing Why Radius of Convex Lens Block Should be Longer than Radius of Tool.

Forming or reshaping a convex grinding tool requires care in order that its diameter is not shortened excessively. While such a tool can be corrected so that it will have a uniform radius of curvature, thereafter it always will be too small, the difference between the edges of the block and the tool will be reduced, and the block will be hard to control.

Polishing Tools

Methods of making polishing tools and the relationships between polishing tools and grinding tools are discussed later in this chapter. Whether they be convex or concave, polishing tools should have the radius of curvature of the finished element.

Convex Work.—A concave polishing tool is used for polishing convex lens blanks. The tool is made on a polishing shell having a radius of curvature approximately $\frac{3}{16}$-inch longer than the final radius. This allowance permits an even distribution of pitch over the entire surface of the tool, as shown in Figure 1209.

Concave Work.—A convex tool is used for polishing concave surfaces, and is made on a polishing shell which has a radius of curvature approximately $\frac{3}{16}$-inch less than the final radius. This provides for a uniform layer of pitch of suitable thickness, as in the case of the concave polishing tool.

Relative Position of Work and Tool

Convex Work.—When fine grinding and polishing convex work, the conventional method is to place the tool on top of the work block as shown in Figure 1210.

Concave Work.—When fine grinding and polishing concave work, the work block normally is placed on top of the grinding tool. However, for the polishing operation, a heavy concave block can be the bottom member, provided the work has a long radius of curvature. This is desirable, as it prevents deformation of the pitch on the polishing tool which might be caused by the weight of the block if it were on top.

Short-radius Work.—Convex work of short radius and large angular aperture, such as eyelens blanks, can be ground singly with the tool underneath. In this case, the lens blank is mounted on a metal stock or wooden stick which places the pin of the oscillating arm at a comparatively great distance from the center. Some operators claim that this enables them better to control the curvature of the work and requires a minimum of tool correction and machine regulation. It is not recommended, however, for a lens blank whose angular aperture is small in comparison with that of the tool.

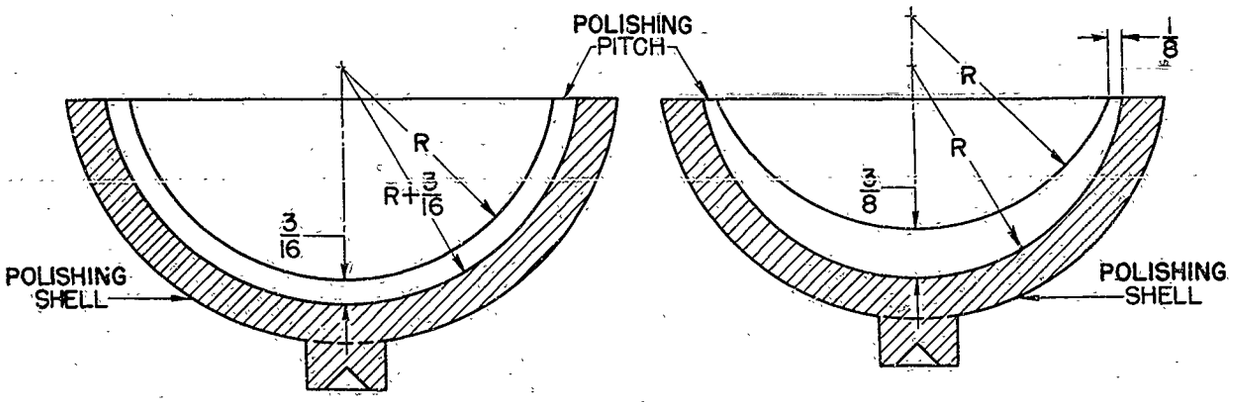

(a) Correct
Uniform Layer of Polishing Pitch
(Concentric Radii)

(b) Incorrect
Non-uniform Layer of Polishing Pitch
(Same Radii)

Figure 1209.—Radius of Polishing Shell for Making a Polishing Tool of the Required Curvature.

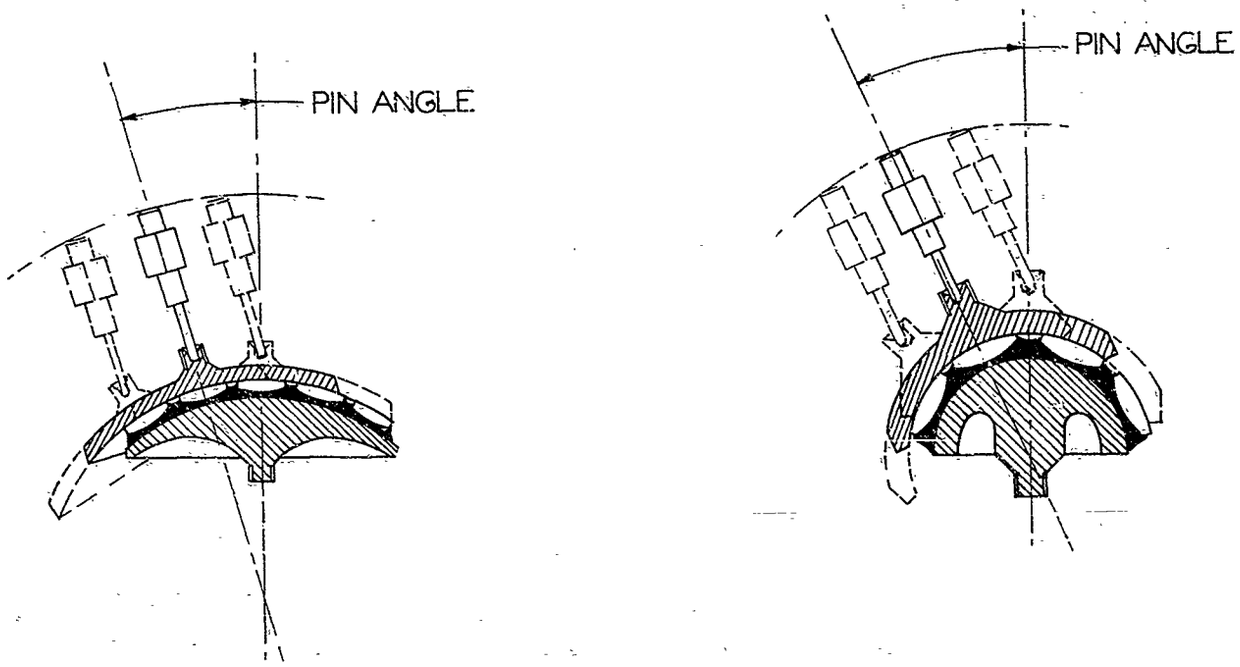

(a) For Long Radii (b) For Short Radii

Figure 1210.—Setups for Fine Grinding or Polishing Convex Lens Blanks.

FINE-GRINDING OPERATIONS

Convex Work

Mounting the Lens Block.—The block of lens blanks is placed on the machine spindle and #1600 abrasive is applied to the grinding tool. The tool is worked by hand back and forth over the blanks for 1 or 2 minutes, and then the pin of the oscillating arm is lowered into place on the spivey at the back of the tool.

Adjusting the Oscillating Arm.—After the block of blanks is mounted, the stroke, pin angle, and grinding sweep of the oscillating arm are adjusted. In radius grinding and polishing, the arm stroke is set at one-quarter of the diameter of the tool. The pin is set at an angle which depends on the radius of curvature of the block. The shorter the radius, the more the pin is canted to the left as shown in Figure 1210.

A 'bent pin' is used as a pivot for short radius work, whether it be convex or concave, in order to obtain the correct stroke (Figure 1211).

Grinding Procedure.—The block is ground with #1600 abrasive until all pits from previous grinding are removed from the surface. The time required to grind a block of lenses depends on both the radius and the diameter of the block.

The same general rules for grinding apply to both lens blanks and flatwork. Adjustment of speeds, center of oscillation, and stroke for correction of curvature is similar to the procedure followed with flatwork. If lens blanks which were rough ground individually are not being fine ground properly by the #1600 abrasive, the trouble may be due to faulty rough grinding. This trouble seldom occurs when the lenses are rough ground on blocks, since the blocking assures that the surfaces of all of the blanks are ground to the same sphere. Defective fine grinding may be caused by grit on the blanks, or dirt between them and the blocking shell, due to inefficient cleaning before blocking. If a defective condition prevails over the entire block, the blanks should be removed, cleaned, re-blocked and re-ground. If only a small percentage are bad, it is advisable to complete the grinding operation and re-process the defective blanks later.

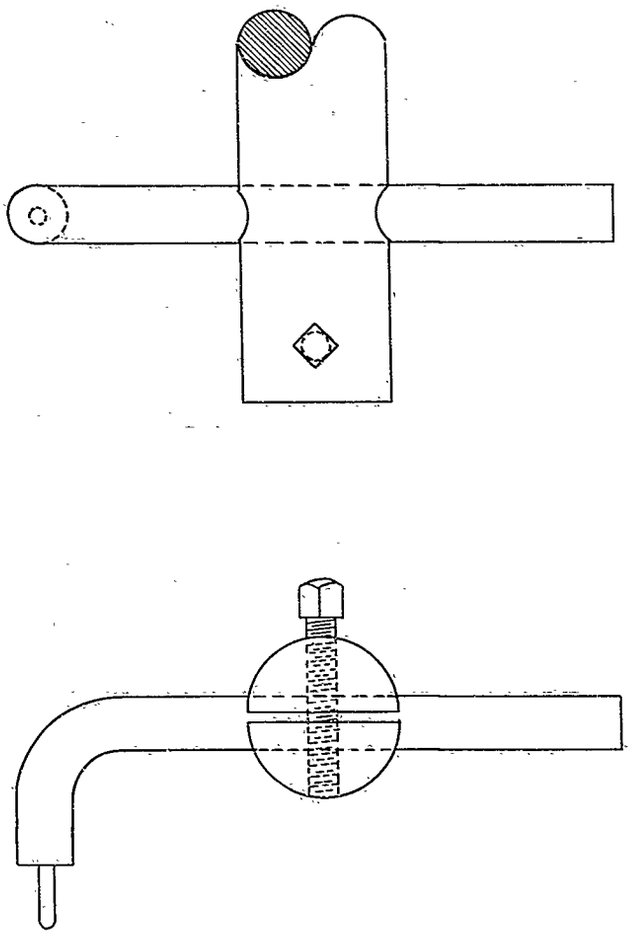

Figure 1211.—Bent Pin Used in Fine Grinding and Polishing Machines on Short-radius Work.

Concave Work

Except for a few differences, the principles of fine grinding concave blanks are the same as those used on convex work. Usually the concave work block is mounted above the tool. When this is done, corrections are made by moving the center of oscillation in a direction opposite to that used to produce the same correction on a convex blank. For example, when the center of oscillation is near the axis of rotation of a block of convex blanks, the result is a low surface (longer radius of curvature than the tool), while with the same setting and with a block of concave blanks on top, a high surface is produced (*i.e.*, the radius is shortened). Greater care usually must be exercised in grinding concave lens blanks, since the majority of concave blanks are made from flint glass. This glass is softer and scratches more readily than the crown glass normally used for convex blanks.

POLISHING OPERATIONS

When the fine-grinding operation has been completed, the blanks are ready for polishing.

In adjusting the polishing machine, it must be remembered that several factors, such as the combination of weights, the consistency of the polishing pitch, and the speed of the spindle are closely related and are dependent on each other to a large extent. Hence, a change in any one may well require that one or more of the others must be changed also.

Preparing Pitch Mixture.—A standard formula for making the pitch mixture used in the polishing tool is to melt together three parts of soft and two parts of hard pitch. The composition is modified when necessary by adding small quantities of either type pitch. The need for such modification may be due to temperature or humidity, or to the diameter or radius of curvature of the blanks or block. Beeswax may be added to produce a softer pitch and rosin is added when a harder mixture is desired. A softer mixture is used in making a polishing tool for flint glass than in a tool to be used for crown glass.

Pitch Polishing Tool

Convex Work.—A concave polishing shell is heated with a bunsen burner to evaporate the moisture on the surface of the metal, and then is filled to the brim with hot polishing pitch. After the pitch has set until the edge appears to harden, the excess pitch is poured back into the pot, taking care to rotate the shell while this is being done. A layer of pitch approximately $\frac{3}{16}$-inch thick is left in the shell.

The pitch adhering to the shell is patted roughly into shape with wet fingers. Then the shell is lowered gently onto the block, which has been previously mounted on the spindle, moistened with a rouge and water mixture, raised, turned, and lowered again in a different position. This procedure is repeated until the tool has been shaped so that it can be rotated around the entire block surface.

Next, the machine is started, and the tool held in contact with the spinning block, in order to complete the shaping and smooth the pitch surface. However, no appreciable weight is placed on the tool, since too much pressure would force pitch out of the shell.

Then the machine is stopped, the tool removed, and, with a sharp knife, the edge of the tool is trimmed and a 3/8-inch V-groove cut through its center, as shown in Figure 1215. This groove must be kept open at all times during the polishing operation.

Concave Work.—A handle is screwed into a convex polishing shell, as shown in Figure 1106, and then the tool is dipped into the hot polishing pitch mixture, removed, and twirled to obtain even distribution of the pitch adhering to it. After this layer of pitch has cooled, the dipping and twirling is repeated until a layer of pitch approximately 3/16-inch thick is formed.

Next, as in preparing the concave polishing tool, it is patted with the wet fingers, moistened with rouge and water, and mounted on a spindle. Now the block, also moistened with rouge and water, is pressed into the soft tool, raised, turned, and pressed again until the tool is shaped so that it can be rotated around the entire radius of the block surface.

After this, the machine is started and the block is worked manually over the rotating tool until the pitch is shaped perfectly.

Then the pin of the oscillating arm is put into position on the block, and the machine is operated to complete the preparation of the polishing tool. This operation requires approximately 5 minutes.

When the tool has been completed, the edge is beveled to remove any excess pitch and to restore the effective diameter. A small hole is countersunk in the center of the pitch surface as a means of partial escape for pitch which otherwise would build a shoulder in that area when the tool is in use. Using a sharp knife, a groove approximately 1/8-inch deep is cut into the surface about four-fifths of the distance from the edge to the center of the tool, as shown in Figure 1106. Additional grooves may be necessary on tools 3 inches or greater in diameter.

There are other methods of preparing polishing tools, only two of which are described here since they are all very similar.

The polishing pitch is heated in a pan until it is tacky. The heated pitch is collected on the end of a stick and spread roughly over the surface of the shell, which has been warmed previously, until about one-half of the central area is covered with a sizable layer.

Next the fine grinding tool is cleaned, cooled, and pressed against the pitch to spread it over the entire surface. It may be necessary to wet the tool with water or rouge to prevent sticking.

The uniformity of the layer is checked by rotating the polishing tool on a spindle, and observing the image of a light as reflected by the moistened surface of the tool. If the reflection is unsteady, the pitch must be shifted with a grinding tool until the uneven condition is corrected. After this has been done the polishing tool is ready for waffling.

Four metal balls or cubes of uniform size may be mounted on the shell as a mechanical aid in producing a uniform layer of pitch. The fine-grinding tool is pressed against the polishing pitch until it touches all four metal pieces.

Polishing tools can be made with a combination of pitch and different cloth materials, and one of this type, the felt polishing lap, will be described later in this chapter.

Polishing Procedure.—The various steps in the polishing procedure for lens blanks will not be detailed here, since they are similar to those described for flatwork in Chapter 11.

It should be noted that when tested with a test glass, the curvature of the surface of a lens may vary within a range of interference rings, the specific tolerance depending on the purpose for which the lens is to be used.

The most common difficulties that are encountered in polishing lens blanks, and the remedies for these difficulties, are shown in Figure 1212—"Trouble-shooting Table for Radius Polishing."

As in fine grinding, when the center of oscillation of the pin is near the center of rotation of the spindle it produces a low surface (greater radius of curvature than the tool) on convex work, and a high surface (less radius of curvature than the tool) on concave work.

TROUBLE-SHOOTING TABLE FOR RADIUS POLISHING

DEFECT	POSSIBLE CAUSE	CHECK	CORRECTION
1. HIGH SURFACE OF CONVEX BLANK (Radius of curvature is too short)	Polishing tool too large	Compare size of tool with work	Cut tool to proper size. Also cut a straight groove in the pitch through the center.
	Improper machine setup (Spindle speed, or speed and length of oscillation not in proper relation to each other)	Machine setup	Set machine to the normal position. Increase oscillating speed and decrease spindle speed.
	Pitch on polishing tool is too hard or too soft	Grooves and pitch mixture	Make another polishing tool, using a new pitch mixture, after adding hardening or softening agent, *i.e.*, enough to meet the varying conditions.
	Pitch layer of polishing tool wearing thin at edge	Radius of polishing shell	Obtain a new polishing tool whose polishing shell is of the correct radius.
2. LOW SURFACE OF CONVEX BLANK (Radius of curvature is too long)	Polishing tool too small	Compare size of polishing tool with work	Use larger polishing tool.
	Improper machine setup (Spindle speed, or speed and length of oscillation not in proper relation to each other)	Machine setup	Set machine to the normal position. Also cut short surface grooves ¼ of the distance from the center to the edge of the concave polishing tool on each side of the straight groove passing through the center, decrease oscillating speed, and increase spindle speed.
	Grooves in polishing tool filling too rapidly	Grooves and pitch mixture	Make another polishing tool, using a new pitch mixture after adding hardening agent, *i.e.*, enough to meet the varying conditions.
	Pitch layer wearing thin at center	Radius of polishing shell	Obtain a new polishing tool whose polishing shell is of the correct radius.
3. HIGH SURFACE OF CONCAVE BLANK (Radius of curvature is too short)	Polishing tool too small	Compare size of polishing tool with work	Cut tool to proper size. Also cut a circular groove in the pitch in a plane lying ⅓ of the distance from the center to the edge of the tool.
	Improper machine setup (Spindle speed, or speed and length of oscillation not in proper relation to each other)	Machine setup	Set machine to the normal position. Also cut a circular groove ⅓ of the distance from the center to the edge of the convex polishing tool, increase oscillating speed, and decrease spindle speed.
	Grooves in polishing tool filling too rapidly	Grooves and pitch mixture	Make another polishing tool, using a new pitch mixture, after adding hardening agent, *i.e.*, enough to meet the varying conditions.
	Pitch layer wearing thin at center	Radius of polishing shell	Obtain a new polishing tool whose polishing shell is of the correct radius.

Figure 1212.

TROUBLE-SHOOTING TABLE FOR RADIUS POLISHING—(Contd)

DEFECT	POSSIBLE CAUSE	CHECK	CORRECTION
4. LOW SURFACE OF CONCAVE BLANK (Radius of curvature is too long)	Polishing tool too large	Compare size of tool with work	Cut tool to proper size. Also cut a circular groove ¼ of the distance from the edge to the center of the polishing tool.
	Improper machine setup (Spindle speed, or speed and length of oscillations not in proper relation to each other)	Machine setup	Set machine to the normal position. Decrease oscillating speed and increase spindle speed.
	Pitch on polishing tool is too hard or too soft	Grooves and pitch mixture	Make another polishing tool, using a new pitch mixture, after adding hardening agent, *i.e.*, enough to meet the varying conditions.
	Pitch layer of polishing tool wearing thin at edge	Radius of polishing shell	Obtain a new polishing tool whose polishing shell is of the correct radius.
5. HUMP	Improper machine setup	Machine setup	Set machine to the normal position, plus a groove ¼ of the distance from the edge to the center of the polishing tool.
	Improper size polishing tool	Diameter of polishing tool and its shell	Trim edge of pitch tool, or select a polishing shell of suitable diameter. For correct size, the oscillating member is slightly smaller (⅛" OD) than the spindle member, and the tool should have a uniform pitch layer.
	Edge of concave tool too thin Center of convex tool too thin	Radius of polishing shell	Select a polishing shell of the proper radius.
	Pitch is too hard or too soft	Pitch mixture	Make new polishing tool, using a pitch mixture that will meet the condition desired.
	Oscillation too slow	Machine speeds	Decrease spindle speed in relation to oscillation speed.
6. HOLE	Same as first three items under "5. Hump" above.		
	Pitch too hard	Pitch mixture	Make pitch softer.
	Not enough center grooves	Grooves	Cut grooves in pitch near center of tool.
	Oscillation too fast	Machine speeds	Reduce oscillation speed in relation to spindle speed.
7. ELLIPTICAL COLOR	Improper machine setup	Machine setup	Set machine to the normal position. Also cut a circular groove in the pitch ⅓ of the distance from the center to the edge of the (convex) tool.
	Improper grooving of tool	Grooves	Re-groove tool to normal.
	Polishing pitch too hard or too soft	Pitch mixture	Make new polishing tool after adjusting pitch mixture to meet the condition. Waffle the tool.
8. BEVELED EDGE (Color)	Improper machine setup	Machine setup	Set machine to the normal position. Also cut a circular groove ¼ of the distance from the edge of the polishing tool.
	Pitch too hard or too soft	Hardness of pitch mixture	Apply new layer of pitch having the proper hardness.

Figure 1212—(Contd).

TROUBLE-SHOOTING TABLE FOR RADIUS POLISHING—(Contd)

DEFECT	POSSIBLE CAUSE	CHECK	CORRECTION
8. BEVELED EDGE (Color)	Polishing tool too large	Diameter of polishing tool	Select a polishing tool of smaller diameter or trim edge of polishing tool.
	Improper grooving	Grooves	Re-groove polishing tool.
9. ZONES (Usually noticed in hand polishing of single elements)	Improper oscillation of work	Oscillation	Adjust for normal setup and machine speeds.
	Improper grooving	Grooves	Re-groove for normal setup.
	Improper radius of polishing shell	Radius of polishing shell with a gage	Obtain a polishing tool whose polishing shell has the correct radius of curvature.
10. SCRATCH	Improper machine setup	Machine setup	Set machine to the normal position.
	Pitch too hard	Pitch mixture	Make a new tool to meet the condition.
	Foreign matter in material or on equipment	Cleanliness of materials, machines, or implements used	Wash and strain the abrasive. Replace rouge supply. Heat the polishing pitch and strain. Make a new tool. Keep all equipment clean at all times.
	Polishing too wet	Rouge water mixture and number of applications	Use less water in mixture and make fewer applications.
	Polishing too dry	Rouge water mixture and number of applications	Use more water in mixture and apply more frequently.
	Scoring too deeply (Grooves should not penetrate through pitch to metal of polishing tool)	Number and depth of grooves	Reshape polishing tool.
	Poor bevel (Coarse emery)	Check bevel for grain	Re-bevel with finer abrasive (FFF).
	No bevel	Inspect blanks for bevel	Bevel blanks
	Chips on edges (Occur during blocking)	Inspect blanks before grinding	Wash block before grinding, *i.e.*, remove glass fragments.
	Touching blanks with metal part of rouge brush	Use of rouge brush	Apply rouge carefully with tip of the brush.
	Careless handling of blanks	Method of handling blanks	Handle blanks as little as possible, touching them only on the edges.
	Improper blocking	Blanks touching each other	Keep proper space between blanks.
	Use of test glass	Cleanliness of both test glass and blank being tested before contact	Both the blank and the test glass should be cleaned and dusted carefully with a camel's-hair brush before testing. Do not press test glass for color nor slide for contact.
	Pitch layer too thin	Depth of pitch on tool	Make a new tool.
	Polishing tool not making complete contact with work	Surface of polishing tool	Heat and reshape the tool.

Figure 1212—(Contd).

TROUBLE-SHOOTING TABLE FOR RADIUS POLISHING—(Contd)

DEFECT	POSSIBLE CAUSE	CHECK	CORRECTION
11. STAINS	Improper cleaning	Cleaning technique	Place clean paper at bottom of finished lens container. Keep lenses completely covered with alcohol. Keep lid over container to prevent evaporation. Dry lenses immediately after removing from solvent.
	Too much rouge used	Rouge and water mixture	Add more water to mixture. Check pH of rouge.
	Polishing too dry	Number of applications	Increase applications.
	Pitch too soft	Pitch mixture	Make pitch harder.
	Polishing tool not making complete contact with the work	Contact of tool with work by placing left hand on oscillating member and noting resistance	Heat and reshape polishing tool. As an added correction, waffle the polishing tool and continue polishing with normal machine setup.
	Improper protective coating of polished surfaces	Coating	Surface to be coated must be absolutely clean and dry. Brush used to apply coat should be clean. Do not mix rouge or water with lacquer.
12. INCOMPLETE POLISH (A surface that cannot be polished clean during normal polishing period)	Improper machine setup	Machine setup	Set machine to the normal position.
	Improper blocking (1) Dirt on lenses (2) Lenses not cooled sufficiently (3) Water too cold (4) Position of blanks (5) Shifting of blanks	(1) Cleanliness of blanks (2) Temperature of blanks (3) Temperature of water (4) Position of blanks in blocking shell (5) Heat of blocking shell	Remove Blanks. (1) Clean carefully and re-block them. (2) Allow longer period for cooling after blocking. (3) Raise the temperature of the water. (4) Space blanks in a symmetrical fashion. (5) Do not heat blocking shell so that the pitch buttons melt completely.
	Improper grinding	Mixture of abrasive and water Inspect for gray on trailing edge of lenses	Adjust abrasive mixture. Change the normal position of the oscillating arm to fall on the right side of the spindle instead of the left side, or reverse spindle direction.
	Blanks not blocked to proper radius	Radius of locating shell	Select a locating shell with the proper radius.

Note: This system of polishing requires the use of a normal machine setup at all times. The slight variations that may occur are left to the more experienced men. This system usually controls the color to within 3 or 4 rings (Newtonian bands). All reference to the correction of the grinding tool has been omitted. This table is based on the assumption that the ground surface is correct.

The normal setup takes into account the following factors: (1) the correct position of the oscillating arm, (2) relative speed of spindle and oscillating arms, (3) weight on arm, (4) angle and height of pin, and (5) groove in polishing tool.

(1) The oscillating arm is adjusted to traverse a distance of ¼ the overall diameter of the tool on the spindle. The lateral setup of the oscillating arm is in line with the center of the spindle.
(2) Ratio is usually 3 to 1.
(3) Sufficient weight to allow proper mixture of pitch to fill in the grooves in 45 minutes of polishing 3-inch to 4-inch blocks; however, smaller blocks vary from 20 to 30 minutes.
(4) The angle the pin subtends increases as the radius of curvature becomes sharper.
Height of pin: the pin is positioned as close to the spindle as working conditions permit.
(5) The groove in the polishing tool surface is approximately one-third the distance from the center of the tool to the edge of a convex polishing tool; for a concave polishing tool, a single groove is placed straight through the center.

Figure 1212—(Contd).

Therefore, to produce a low surface on concave work, the center of oscillation usually is moved away from the axis of rotation so that the polishing action is done with the outer edge of the tool.

The block should be inspected for curvature after a short period of polishing. If the surface is incorrect, adjustments are made as indicated in Figure 1212. It is necessary to check only one lens blank of a block for curvature, and should it be found to be incorrect, the pitch or metal surface adjacent to this blank is marked with crayon. After further polishing, the same blank is tested again. In this way only one blank is used each time for checking. The advantage of this method of checking is that the scratches caused by checking are confined to the surface of one blank rather than distributed over several.

Correcting the Surfaces.—The methods used for correcting a lens blank surface are similar to those used for flatwork, as described in Chapter 11, and as outlined in Figure 1212, "Trouble-shooting Table for Radius Work."

It is more effective to correct a block of lenses that is running high or low by changing the position of the oscillating arm than by altering the speeds. The arm should be moved in small steps and at intervals, taking care to stop the polishing machine when making the adjustment (see Figures 1213 and 1214).

Blanks whose surfaces are excessively high or low are removed from the block, re-processed, and then re-blocked for further fine grinding and polishing. However, the grinding tool should be checked and corrected before it is re-used. When it has been corrected, the desired curvature is obtained by re-setting the arm, grooving the polishing tool, or changing the spindle speeds.

Figure 1215 and the tables in Figure 1216 will be useful when it is necessary to correct a high or low surface of convex or concave curvature, provided the tool is reasonably close to the correct curvature.

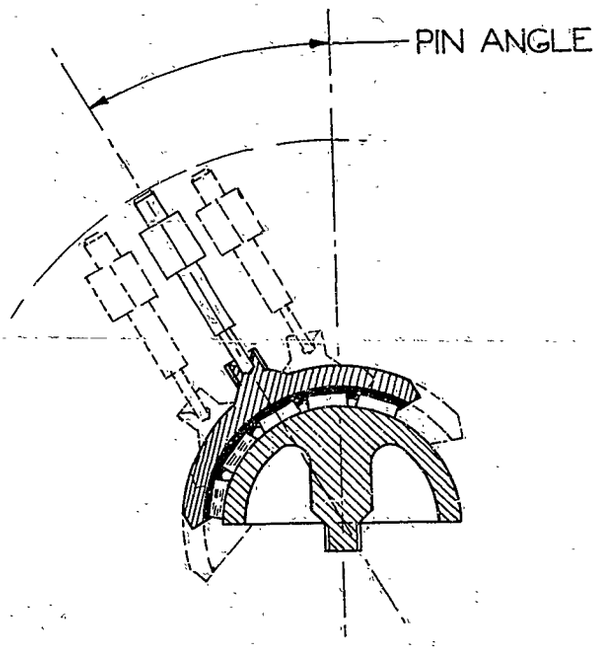

Figure 1213.—Stroke of Oscillating Arm for Correcting While Fine-grinding or Polishing 'Low' Concave Lens Blanks.

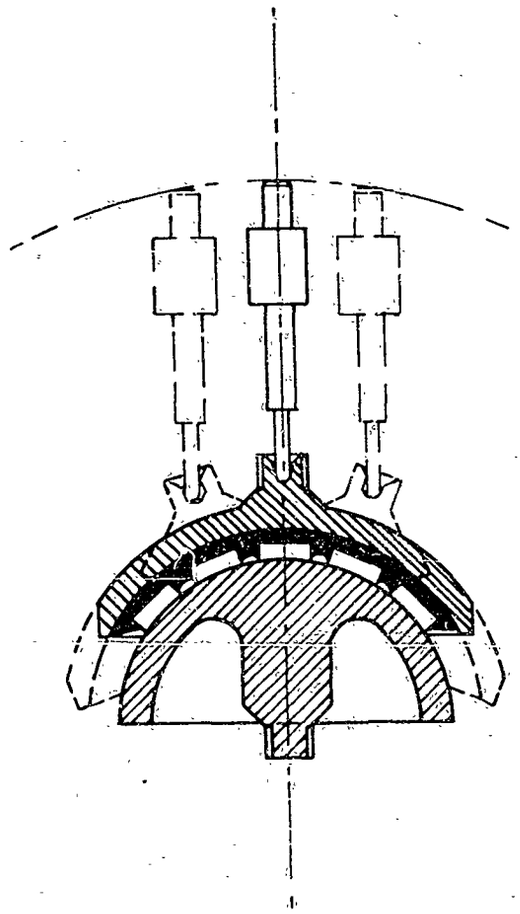

Figure 1214.—Stroke of Oscillating Arm for Correcting While Fine-grinding or Polishing 'High' Concave Lens Blanks.

(a) For Low Convex Lens Blanks (b) For High Convex Lens Blanks

Figure 1215.—Location of Waffling (on Concave Polishing Tools) for Correcting Convex Lens Curvatures.

TABLE OF METHODS FOR CORRECTING HIGH AND LOW LENS SURFACES

LENS BLANK	CONDITION OF LENS SURFACE	MOVE CENTER OF STROKE	WAFFLE POLISHING TOOL	SPEED OF	
				Oscillating Arm	—or Spindle
Convex	High	Toward center	At outer edges, as in Figure 1215 (b)	Increase	Decrease
	Low	Toward edges	Near center, as in Figure 1215 (a)	Decrease	Increase
Concave	High	Toward center, until center of stroke and center of spindle coincide, as in Figure 1214	Near center	Decrease	Increase
	Low	Toward edges, until lens block overlaps edge of tool, as in Figure 1213	At outer edges	Increase	Decrease

Figure 1216.

Felt Polishing Tool

A polishing tool shown in Figure 1114 may be used for spherical polishing, but it has the same limitations as when it is used for flat-work. These limitations and the method of making such a tool are described in detail in Chapter 11 and will not be repeated here. For radius work, the flat pressing tool is replaced by a pressing tool of the proper radius when forming the surface of the felt polishing tool. It is almost universal practice to use a lens surface for this purpose when preparing a tool for single lenses. When a lens is so used for forming, it is mounted on a holder with wax, and pressed by hand against the felt in order to shape the felt disk and make it adhere firmly to the face of the polishing too.

At Frankford Arsenal, a felt tool mounted on a lathe is used for repairing small eye and field lenses.

SHORT-RADIUS WORK

To avoid confusion, short-radius work will be discussed in terms of the 'angle of aperture'.

The angle of aperture is the angle formed between two radii of the same surface curvature drawn to the extremities of a diameter of the work.

Only one lens blank having an angle of aperture of 120° or more can be mounted on a single block, and this class of blanks will be considered to make up short-radius work. It should be noted that this rule applies regardless of the length of the radius of surface curvature.

Eye lenses used in military instruments are an example. They usually combine a radius of curvature of less than 1 inch with an angle of aperture of 120° or more. This means that the surface to be processed is almost hemispherical in shape, which makes multiple blocking impossible.

Blocking Singly

Convex Work.—Each lens blank is blocked with sealing wax on a wood, steel, or brass stock, whose diameter is about the same or a little smaller than the blank. The stock should be of the right length so that the tool will be high enough not to touch the adapter at the end of the stroke. The end of the stock on which the blank is mounted is flat or curved as required. The other end is flat, with a threaded hole located centrally for fastening to a metal adapter.

Both the blanks and stocks are heated slowly, after which a button of blocking wax is placed on the stock. Next the stock is picked up with tongs, inverted, and the button end placed on the surface of a blank. The blank is centered on the stock with the fingers, to make processing easier. After cooling, the stock, with the blank attached, is screwed to an adapter and the blank is ready for working.

The adapter is designed to suit the machine on which it is used. One end is arranged so that it can be mounted on the spindle of the machine and the other is threaded to receive the stock.

Concave Work.—The stock used for mounting concave lens blanks should be about the same diameter as the blank and approximately ½ inch in height. One end is either flat or curved, as may be required for mounting the lens blank, and the other end is countersunk at the center to receive the pin in the oscillating arm.

Machines

The machines used for processing lens blanks singly are similar to those used for working blanks mounted in multiple, except that all parts other than the spindle are smaller, there are more spindles per machine, and faster speeds are obtainable. Machines having about eight spindles will be considered in this section.

Fine-grinding Tools

The curvature of a short-radius fine-grinding tool must be controlled more carefully than one used on long-radius work. The reason for this extra care is that a large part of the grinding area of the tool is covered by the blank, thus permitting little opportunity for correction by re-setting the machine.

It should be remembered that the wear is least near the center of the rotating member and greatest near the edge, thus an incorrect machine setup will quickly produce a defective radius on the rotating element.

The surface of each blank should be very close to the correct curvature of the next grinding tool after leaving the preceding operation in order to avoid excessive tool wear. A convex blank should be slightly low and a concave blank slightly high in order that the grinding can be done from the edge toward the center.

Sometimes two fine-grinding tools are used. The first tool is used to bring the lens blank curvature nearly to its proper shape. This permits the second tool to operate within a range where it will not be deformed beyond the point where it can be corrected with adjustment of the stroke or center of oscillation. The blank from the first tool can be checked on the second tool by using pencil lines as described later in this chapter.

In setting up the machine, the location of the center of oscillation and the adjustment of length of stroke are important, as a slight error in either produces an exaggerated curvature on the blank. The principles of settings and changes that have been discussed previously, both in this chapter and Chapter 11, apply to short-radius work as well.

In grinding concave blanks, the tool is always placed on the machine spindle.

Convex blanks can be processed with either the blank or the tool mounted on the spindle of the machine. The latter method is preferred, even though it is contrary to the usual practice in working blocks, because it is easier to con-

trol the curvature when the work is on the spindle. A stock is used in either case. However, when the tool is on the spindle two differences should be noted: (1) a spivey to receive the pin of the oscillating arm is threaded in the end of the stock opposite that on which the block is mounted; and (2) the stock must be at least 2-inches long.

Polishing Tools

The polishing tools for lens blanks of short radius and large aperture are made of felt and polishing pitch. The tools and blanks are mounted on the polishing machine in the same manner as work of longer radius of curvature, *i.e.*, for convex curves the blank is mounted in the spindle and the polishing tool is placed on top, while for a concave curvature, the tool is mounted in the spindle with the blank above.

When the polishing tool is the upper member, it should be slightly smaller than the blank. As stated earlier in this chapter, with a block of lens blanks of about a 3-inch radius of curvature and a nearly hemispherical shape, the bottom edge of the tool should be about ¼ inch above the bottom edge of the lowest blank. On short-radius work the difference in level of the two edges is smaller and decreases in direct proportion to the shortening of the radius. Of course if the lens blank is concave, it is the upper member and the tool is larger because the diameter of the lower member always should be the greater of the two. The difference between the edges need not be determined too exactly, but should be such that it will permit re-setting of the machine to correct defects in curvature.

The polishing tool for processing concave surfaces is grooved the same as for longer-radius work only on a smaller scale, but usually the tool for convex surfaces requires only a small hole at its center.

These tools flow the same as larger ones and require frequent trimming to restore the original diameter.

An operator who has fine ground and polished long-radius work, and then starts processing short-radius, large-aperture work, will notice many differences between the two classes of work. The speed of the machine is much faster in short-radius work. This is permissible because the surfaces are near the center of rotation. It is more difficult to recognize 'gray' on the surface, especially in the case of concave blanks. Every blank must be checked for curvature instead of only one on a block; consequently greater care is necessary in using the test glass, since each blank that is scratched must be re-processed. As the surface changes more rapidly when polishing, the blank should be checked more frequently, than in long-radius work. Processing requires frequent changes in the stroke of the oscillating arm and it is necessary to watch the polishing tool more closely to prevent it from becoming too large.

The number of machine adjustments required during polishing can be reduced to a minimum by producing at the fine-grinding operation a curvature that is best suited to polishing.

CURVATURE OF SPECIAL TOOLS AND SHELLS

In processing a lens blank, each successive surface more nearly approaches the final polished surface.

Much of the difficulty encountered in grinding and polishing radius work originates from using radius tools that have been prepared improperly. It must be remembered that a definite relationship exists between the rough-grinding, fine-grinding, and mounting tools. The principal tools used in processing spherical surfaces, and the radius relationships between them, are shown in Figure 1217.

It is important that the surfaces of the blocking shell and the polishing shell shall have the same center of curvature, as indicated in Figure 1218. This is necessary so that the least thickness of the layer of blocking adhesive between the blocking shell and each blank shall be uniform for all blanks. It also assures that the thickness of the layer of polishing pitch on the polishing tool will be uniform. If the least thickness of the layer of adhesive between each blank and the blocking shell is not uniform for all blanks, those elements with the greater thickness between them and the blocking shell will receive a greater pressure and thus will be forced out of position.

CHART SHOWING COMPARATIVE SIZE OF TOOLS USED IN LENS PROCESSING

NO.	FOR CONCAVE LENS SURFACES	FOR CONVEX LENS SURFACES	TOOL OR FIXTURE
1.	Rough Grinding Tool		
2.	Locating Shell		
3.	Fine Grinding Tool		
4.	Polishing Tool (Same radius as finished lens surface)		

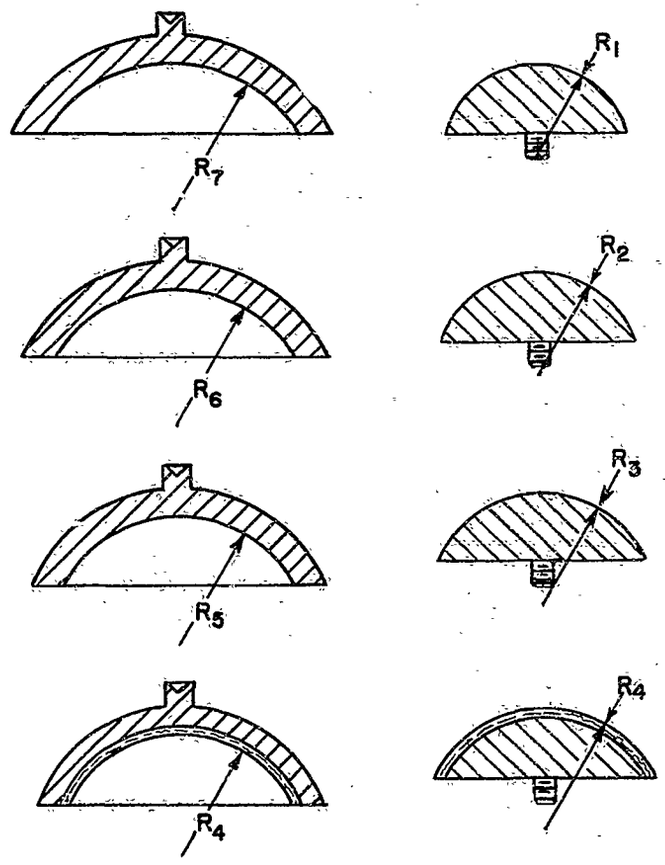

NOTE: The subscript numbers in connection with the symbol R are in order of size (*i.e.*, R_1 is less than R_2, R_2 is less than R_3, etc., R_7 being the largest radius). R_4 is the finished radius desired for either a convex or a concave lens surface. The difference in radii shown in the drawings is greatly exaggerated for clarity. The actual difference in radii is only a few hundred thousandths of an inch.

Figure 1217.

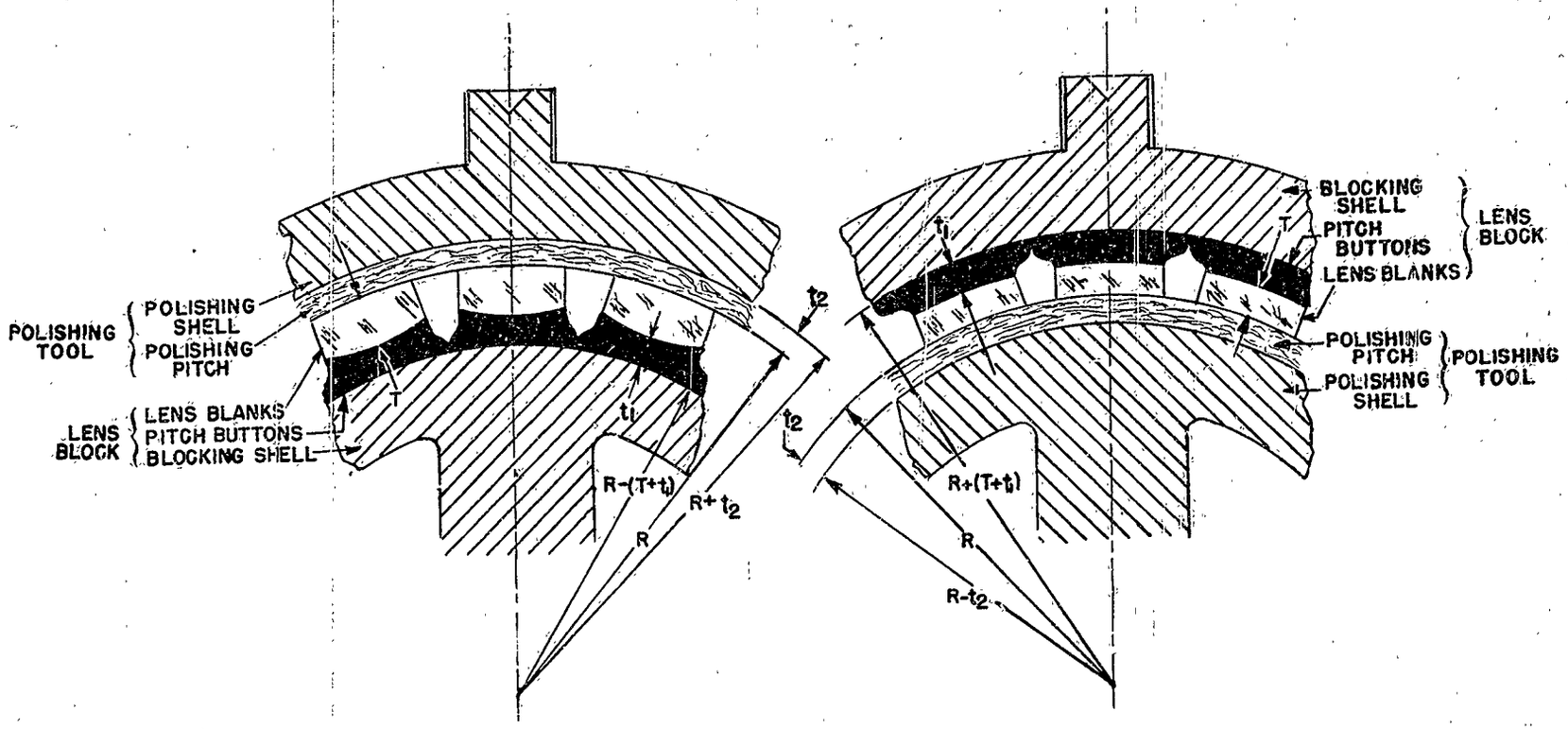

(a) Convex Lens Surfaces

(b) Concave Lens Surfaces

Figure 1218.—Sectional Views of Lens Blocks and Polishing Tools.

Blocking and Polishing Shells

Blocking Shell.—The radius of curvature of the blocking shell depends upon whether the surfaces to be processed are convex or concave and upon the greatest finished thickness of the blanks. For convex surfaces the radius of curvature of the block is less, and for concave surfaces the radius of curvature is greater, than the finished radius. The reason for this difference can be seen by referring to Figures 1218 and 1219. From these two figures it will be seen that the difference is equal to the greatest finished thickness of the blank plus the least thickness of the pitch button, which latter (t_1) should be about 0.200 inch when the lens blank is blocked.

TABLE SHOWING RELATIONSHIP OF BLOCKING AND POLISHING SHELL RADII TO RADIUS OF FINISHED LENS

RADIUS OF	FOR CONVEX LENS	FOR CONCAVE LENS
Blocking Shell	$R-(T+t_1)$	$R+(T+t_1)$
Polishing Shell	$R+t_2$	$R-t_2$

Explanation of Symbols (see also Figure 1218):

R = Finished Polished Radius of Lens Surface
T = Greatest (Overall) Thickness of Lens
t_1 = Least Thickness of Pitch Button
t_2 = Thickness of Polishing Pitch

Figure 1219.

Polishing Shell.—The radius of curvature of the polishing shell is such that when the layer of pitch is applied the resulting polishing-tool surface will have the radius of the finished (polished) lens. Therefore, for concave surfaces, the radius of curvature of the polishing shell is less than that of the polishing tool, and for convex surfaces it is greater. The difference is the thickness of the layer of pitch (see Figure 1219–t_2) and normally should equal $\frac{3}{16}$ inch, as previously stated.

Tools and Locating Shells

The difference in radius between the locating shell and the grinding tool depends upon the radius of the lens blank surface that is being processed.. The table given in Figure 1220 illustrates one series of curvatures, referred to that of the finished surface, that has been used successfully at Frankford Arsenal. The curvature comparison for the rough-grinding tool is expressed in rings in this table, in order to show the relationships more clearly. However, in actual practice, the rough-grinding tool is tested with a radius gage or a spherometer rather than with a test glass.

Convex Work.—A high lens blank is difficult to locate on the locating shell. Therefore, in order that locating can be done more easily and to reduce the necessity for removing too much axial thickness, the blanks should be

TABLE SHOWING RELATIONSHIP OF TOOL AND LOCATING SHELL RADII TO RADIUS OF FINISHED LENS

TOOL OR FIXTURE	CURVATURE PRODUCED WHEN CHECKED WITH A TEST GLASS ON A	
	Convex Lens	Concave Lens
Rough-grinding (FFF) Tool	8 rings low	8 rings high
Locating Shell	6 rings low	6 rings high
Fine-grinding Tool	3 rings low	3 rings high
Polishing Tool	3 rings (or fewer) low	3 rings (or fewer) high

Figure 1220.

slightly low to this shell. In order that the curvature of the blank will be low to the tool at the start of each operation, the radius of each tool becomes slightly shorter as the progression is made from rough-grinding tool, to locating shell, to fine-grinding tool, to polishing tool. This assures grinding from the edge of the work inward. The polishing tool has the radius desired for the finished lens.

Concave Work. — Conversely, for concave surfaces the radius of each tool used is slightly longer than that used in the operation. As in convex work, the progression is from the rough-grinding tool, to locating shell, to fine-

grinding tool, to polishing shell. The polishing shell has the radius of the finished lens.

Variation with Operator.—When breaking in new operators, it is advisable to increase the difference between the radii of the tools and the finished lens. On the other hand some experienced operators prefer small differences, *i.e.*, they might use a descending series of 6, 4, and 1 rings. The difference between successive tools is not altered, but each is made 2 rings closer to the radius of the finished lens.

Variation with Angle of Aperture.—It is usual to use a smaller difference between the radius of the tool and the radius of the finished lens, for blocks which subtend a comparatively small angle. That is, a block which subtends 180° should have a rough-grinding tool which differs in radius by the maximum amount of 8 rings, while a block which subtends 60° may have a difference from the rough-grinding tool of only 6 rings.

Determining Curvature.—The radii of the rough-grinding tool, work block, and polishing shell are checked with a radius gage or spherometer. Because they have a fine-ground surface, locating shells and fine-grinding tools can be checked optically with a test glass, but when these tools are being made or corrected they usually are checked with a gage. The curvature of the polishing tool is always checked by checking optically the lens surface produced by it. The difference in radius between the fine-grinding tool and the polishing tool, being only a few hundred thousandths of an inch, is checked by measuring optically the surface produced by each.

Checking Radius of Curvature

The radius of curvature of grinding tools usually is checked indirectly. That is, a block of lenses is ground, given a 'shine' with the polishing tool, and then one of the blanks is tested with a test glass. Hence any references to rings, high or low, do not refer to the block as a whole but to an individual lens of the block. It is rare that grinding tools are tested directly with a test glass (except in the case of surfaces, of very long radius approaching a plane) because this can be done only with tools that are finished very well. It should be noted however, that the use of a test glass to check metal tools, preferably under a monochromatic light, is not poor practice providing that every care is taken to prevent scratching the glass. When the surface of a tool is corrected, the corrected surface is checked indirectly by the optical method, as radius gages usually are not satisfactory for checking the final correction.

Rough-ground Lens Blank.—After grinding with FFF abrasive or its equivalent.

Locating Shell Available.—When a locating shell of correct radius is available:

1. The blank is marked with a pencil as shown in Figure 1221(a).

2. The blank is rubbed against the moistened surface of the locating shell.

3. The pencil marks that remain after rubbing are examined. These may be similar to (b), (c), (d), or (e). If the curvature of the lens is correct the mark remaining will be like (c).

Fine-grinding Tool Available.—When a fine-grinding tool of correct radius is available the procedure is the same as described in the previous paragraph. The remaining marks will be longer because the radius of this tool is nearer the radius of the finished lens. The marks on a lens of correct curvature accordingly should extend out from the center about five-eights of the distance from the center of the blank to the edge.

Neither Locating Shell nor Fine-grinding Tool Available. (a) Using a Finished Radius Gage.—A convex blank must be ground low, *i.e.*, so as to have a longer radius of curvature than the gage with which it is checked. A concave blank must be ground high, *i.e.*, so as to have a shorter radius of curvature than the gage with which it is checked. It is more difficult to check the curvature satisfactorily with a radius gage than with a spherometer.

(b) Using a Dial Spherometer.—A dial spherometer is set to read zero when placed on the spherical surface of a sample lens blank and then the spherical surfaces of all pieces tested should produce a zero reading if they have the same radius of curvature.

MARKINGS ON ROUGH-GROUND LENS SURFACES BEFORE AND AFTER CHECKING CURVATURE BY RUBBING ON THE LOCATING SHELL

	(a)	(b)	(c)	(d)	(e)
Convex Lens	Marked Lens	Lens Too Low	Lens Low and Correct	Lens Low, but Not Low Enough	Lens High
Concave	Marked Lens	Lens Too High	Lens High and Correct	Lens High, but Not High Enough	Lens Low

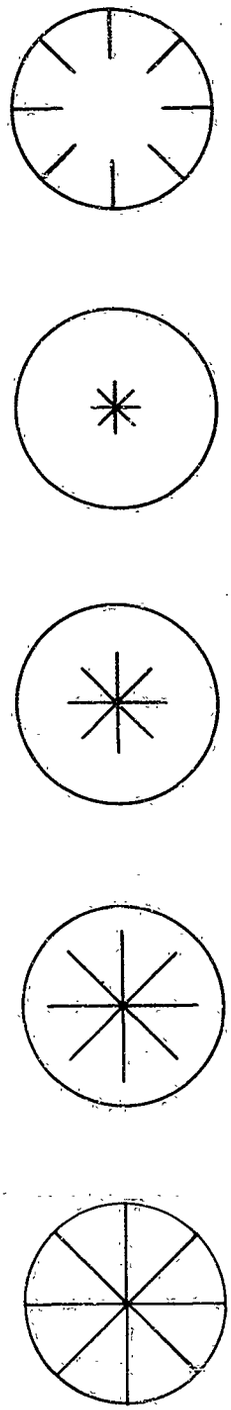

Figure 1221.

Locating Shell. *Fine-grinding Tool Available.*—When a fine-grinding tool of the correct radius is available:

1. The blanks are mounted by means of the locating shell and the surfaces of the blanks are marked with crossed crayon lines.

2. The block is fine ground by hand with the fine-grinding tool.

3. After a short period of fine grinding the crayon markings are examined. If the surfaces are ground about halfway between edge and center of the block, the locating shell is correct, see Figure 1221 (c).

Fine-grinding Tool Not Available.—When the radius of the fine-grinding tool is in doubt.

(a) Using a Locating Shell as a Fine-grinding Tool.

1. The lens blanks are mounted, using a locating shell.

2. Fine-grinding is done with the locating shell.

3. The work is polished for about 5 to 10 minutes or until it acquires a shine.

4. The blanks are checked with a test glass.

(b) Using Test Glass on Locating Shell.

1. Sometimes when the tool has a fine ground surface, it may be checked with a test glass, using the mate of the one to be used for checking the work.

Fine-grinding Tool. *Locating Shell Available.*—When a locating shell of the correct radius is available:

1. The lens blanks are mounted, using a locating shell, and the surface of the blanks are marked with crossed crayon lines.

2. Fine grinding is done by hand, using the fine-grinding tool.

3. The crayon lines are examined after a short period of grinding. If the grinding has started in the center, the radius of the tool is too long if grinding convex blanks, and too short if grinding concave blanks. If grinding starts at the edge and tends to seize the block, the radius of the tool is too short if grinding convex blanks, and too long if grinding concave blanks. If, after a short period of hand grinding, the marks have been removed about half-

way from the center to the edge of the block the grinding operation can be completed, using the oscillating arm.

4. The work is polished for about 5 to 10 minutes, or until it acquires a shine.

5. The work is checked with a test glass.

Locating Shell Not Available.—When a locating shell of the correct radius is not available:

1. The fine-grinding tool is checked with a finished radius gage, and the tool is corrected if necessary.

2. The blanks are mounted, using the fine-grinding tool as a locating shell.

3. The work is fine ground.

4. The work is polished for about 5 to 10 minutes, or until the work acquires a shine.

5. The work is checked with a test glass.

CHAPTER 13

CENTERING AND EDGING LENSES

	Page No.
Centering and Edging Machines at Frankford Arsenal.	1302
Elgin Tool Works.	1302
Jorgan–Anderson Company.	1303
Robinson–Houchin Optical Company.	1304
Centering, Edging, and Beveling Operations.	1304
Centering and Edging.	1304
Beveling.	1307
Centering and Edging Machines Used by Various Manufacturers.	1308
Eastman Kodak Company.	1308
Large Machine.	1308
Procedure.	1308
Small Machine.	1310
Procedure.	1310
Shuron Optical Company.	1310
New Jersey Machine Corporation.	1310
Centering and Edging.	1310
Beveling.	1313
Centering Only.	1314
Bell & Howell Company.	1316
Universal Camera Corporation.	1317
Spencer Lens Company.	1318

'Centering and edging' is the process of grinding the edge of a lens so the edge will be circular and concentric with the optical axis of the lens. The work is done on what are known as 'centering and edging' machines. The first step is to mount or 'center' the lens, on a chuck or other fixture that is rotating slowly, so that the optical axis of the lens coincides with the axis of rotation. After the lens has been centered and while it continues to turn, it is ground to the required diameter by bringing a rotating grinding wheel into contact with the edge. This latter operation is called 'edging'. In addition to centering and edging, it is customary to bevel one or both corners of the lens on this machine as well.

Two methods are used for centering the lens on the machine, one known as the 'reflected image' method, and the other as the 'aligned cup' method. The former system is used on the machines manufactured by Elgin Tool Works, Jorgan-Anderson Company, Robinson-Houchin Optical Company, Universal Camera Corporation, and others, while the aligned cup method is used on machines made by Eastman Kodak Company, who developed the process, and by Shuron Optical Company.

The machines that use the reflected-image method for centering, can be built with two or four spindles, the multiple spindles permitting the operator to center and bevel one lens while another is being ground. On the other hand, while the machines that use the aligned-cup method have only one spindle, a single operator may use two or more simultaneously. Various machines and the two methods of centering are described in this chapter.

Centering and edging are related very closely to the process of cementing flint and crown elements into doublets. There are three general procedures for performing these three operations, one of which is to center and edge the flint and crown elements separately to the finished diameter and then cement them together to make doublets.

Another method is to center the flint element and grind its edge until it is circular and concentric with the optical axis of the lens, but keeping it larger than the finished diameter. Next, an uncentered crown is cemented to the flint, taking care that the optical axis of the two elements coincide, and then the resulting doublet is centered and edged to the desired diameter. This method permits centering and edging two elements at the same time and gives a better edge than when the elements are processed separately.

The third method is to cement a pair of uncentered flint and crown lenses together and then center and edge the doublet thus formed. This method is used very little, however, because it is difficult to center more than the outside surfaces of the doublet on the spindle of the centering machine. Thus the doublet may appear to be centered only because the error in one element counteracts an opposite error in the other. Furthermore, when this method is used, the elements develop a prismatic condition (Figure 1306) which makes it impossible for them to be interchangeable, and, in addition, the doublet may have poor definition.

The particular procedure used for centering and edging depends on which of the three methods just mentioned are adopted. However, the third method should not be used on precision optical elements except under emergency conditions when the doublets are vitally needed and the existing conditions prevent use of one of the first two methods. A practical modification of this method has been developed by Optical Research, Inc., and, together with methods of coating the edges, is described in Chapter 20, under "Centering and Edging Cemented Lenses."

CENTERING AND EDGING MACHINES AT FRANKFORD ARSENAL

It is the practice at Frankford Arsenal to center and edge crown and flint elements separately and then cement them together to make the doublets. The following makes of machines were used during World War II.

Elgin Tool Works

Figure 1301 shows a two-spindle, fixed-speed machine equipped with an 8-inch-diameter, 1-inch-face diamond wheel which revolves at a speed of 1750 rpm. The front spindle is

used for centering and is controlled by a foot treadle. The rear spindle is used for grinding. Whenever grinding is complete, the head which holds the two chucks is rotated 180°, bringing the newly-centered lens into position for grinding and bringing the edged lens into position for dismounting. The chuck speed is 200 rpm while centering, and 30 rpm while grinding.

Jorgan–Anderson Company

Figure 1302 shows a four-spindle machine capable of edging lenses up to 2½ inches in diameter. The carborundum wheel is 8 inches in diameter, has a face 1¼ inches wide and revolves at a speed of 820 rpm. The head indexes to bring each of the four spindles, in sequence, to each of the four stations. When at

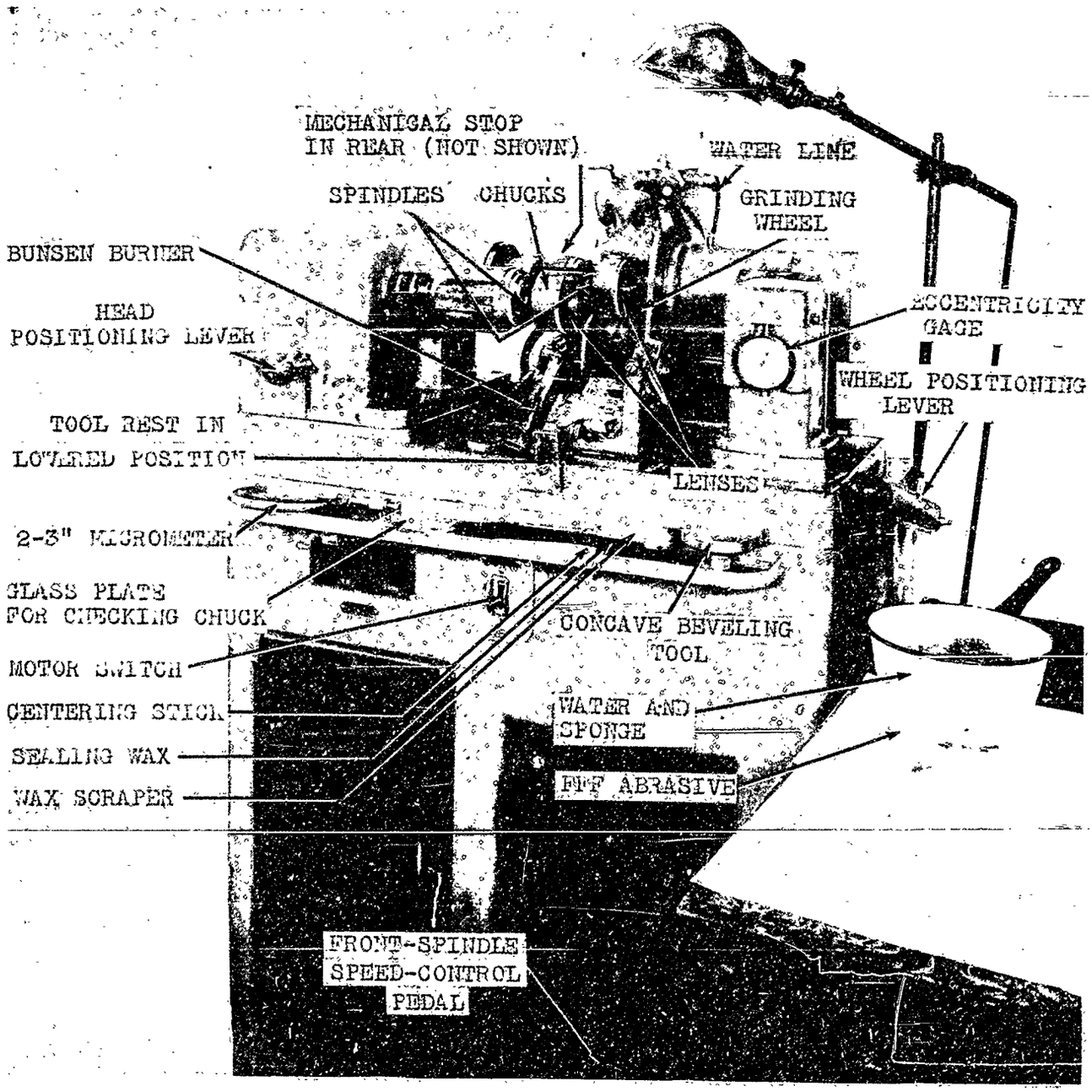

Figure 1301.—Two-spindle Centering and Edging Machine
(Elgin Tool Works)

the front station for centering the spindle is controlled by a foot treadle. Grinding is done at the rear station. At the top and bottom stations the spindles continue to revolve, but no operation is performed. The speed of the chuck is 300 rpm while centering, and 8 rpm while grinding. If a diamond wheel is substituted for the carborundum wheel, the surface feet per minute must be increased accordingly.

Robinson–Houchin Optical Company

Figure 1303 shows a two-spindle machine equipped with a diamond-charged wheel, 5 inches in diameter and with a face ½-inch wide, which revolves at a speed of approximately 3400 rpm. The spindle speed is 245 rpm while centering, and 6 rpm while grinding.

CENTERING, EDGING, AND BEVELING OPERATIONS

Centering and Edging.—The foregoing centering and edging machines use brass chucks with an outside diameter of 0.005 inch less than the finished diameter of the lens and a wall of thickness that varies from 0.062 inch for small lenses up to 0.125 inch for the larger

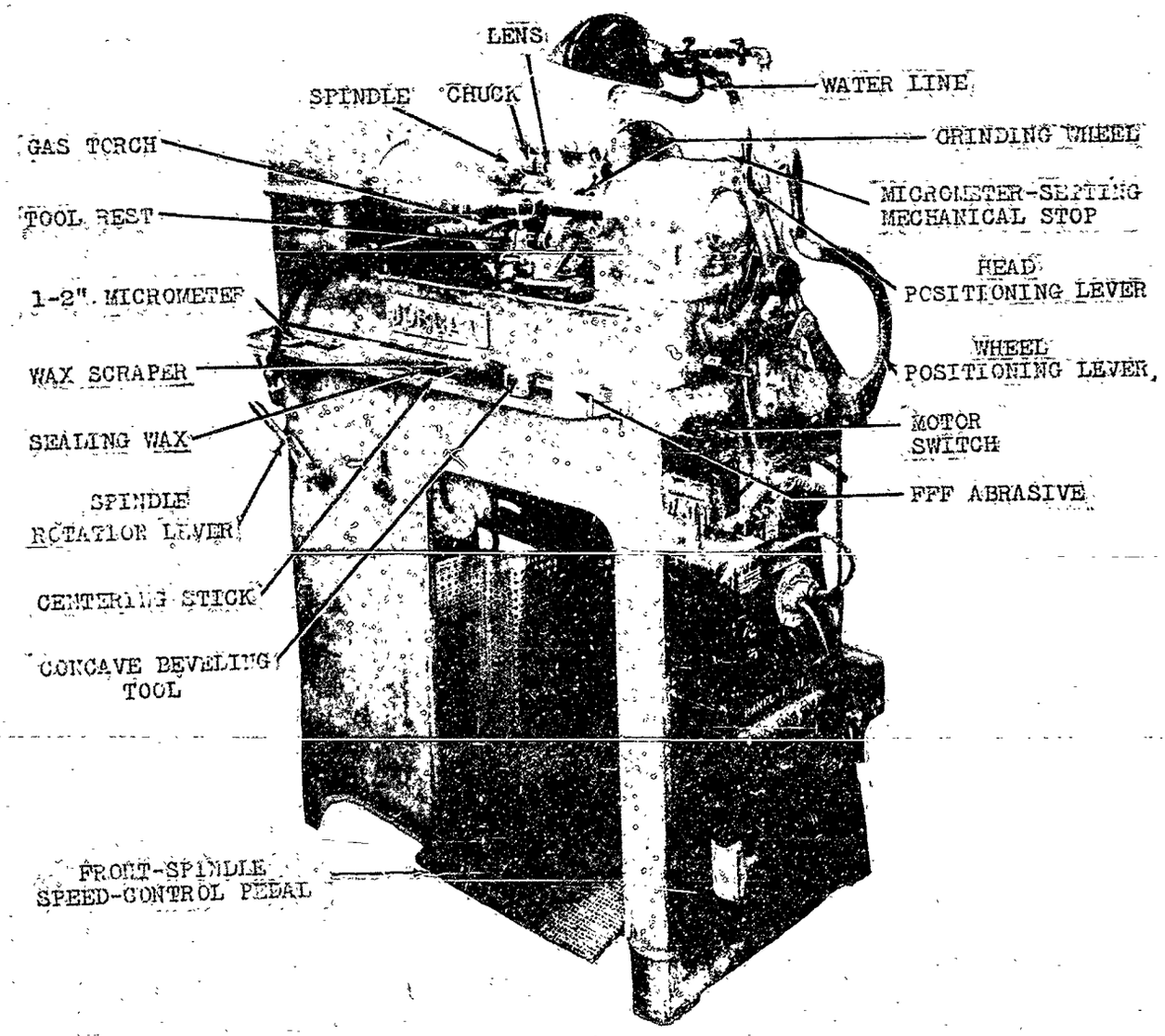

Figure 1302.—Four-spindle Centering and Edging Machine. (Jorgan–Anderson)

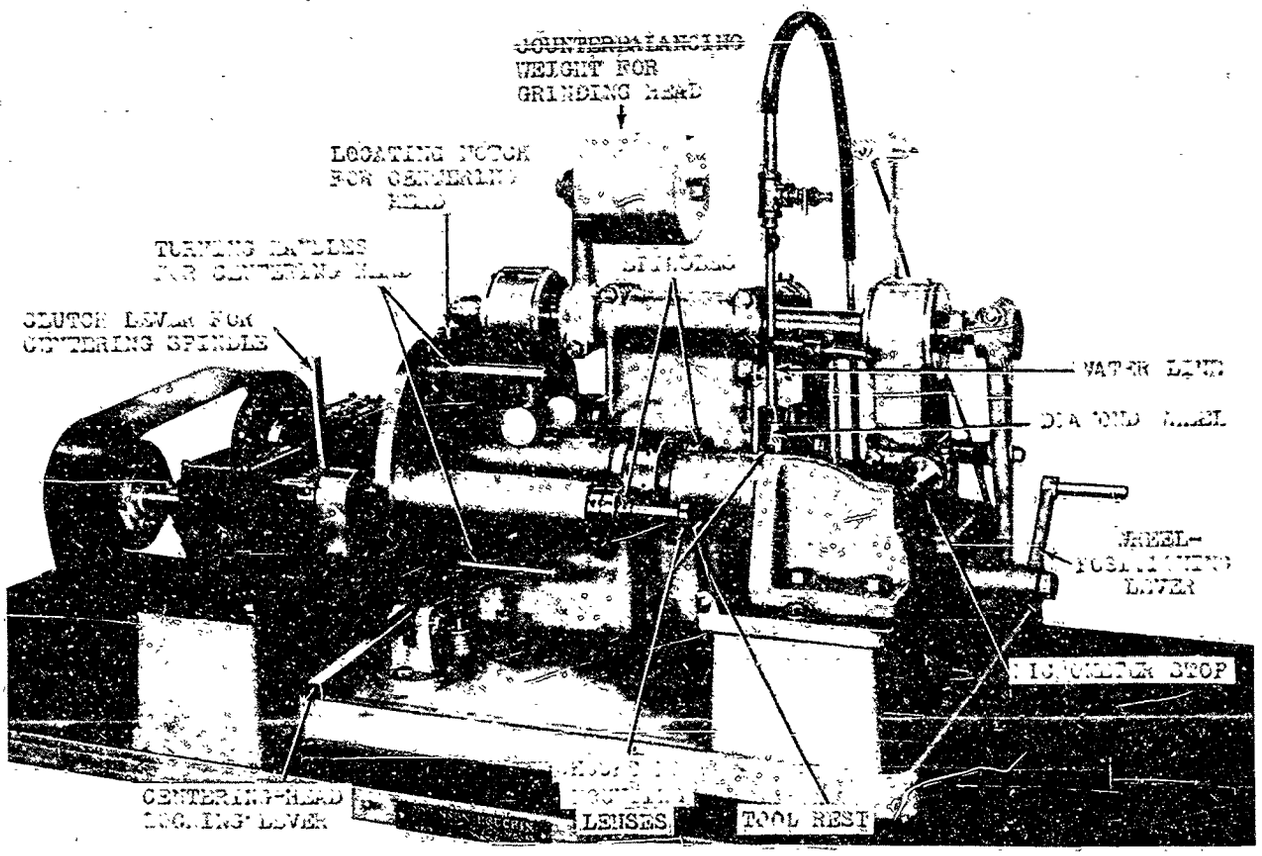

Robinson–Houchin Optical Company

Figure 1303.—Two-spindle Centering and Edging Machine.

sizes. It is important that the diameter of the chuck be very little less than that of the finished lens so that it will leave no visible scratches on the polished surface of the lens after it is centered and cemented. The same chucks are used for both convex and concave lenses. The open end of the chuck is turned down with a flat-nosed file or other cutting tool to end in a knife-edge. It is very important that the edge of this V-end be perfectly smooth and in a plane perpendicular to the axis of rotation. To test the face of the chuck for accuracy, a polished glass plate is held against the rotating chuck and the reflected image of a light is observed. If the image moves, the end of the chuck is dressed and tested again. This process is repeated until the image remains stationary.

With the machine in motion and the chucks mounted properly, the chuck nearest the operator is heated by means of a small gas flame and wax is applied to the V-end of the chuck. The quantity of wax must be sufficient to hold the lens firmly but not enough to fill the inside channel of the chuck, for if this channel becomes completely closed, the pressure of the air inside will increase from the heat of the gas flame, press against the inside surface of the lens, and force the lens off the chuck. As an added precaution against building up any back pressure, small vent holes are drilled through the chuck near its base (Figure 1304).

When the proper amount of wax has been applied, the chuck is stopped and the lens is placed against the V-end, taking care that there is a thin layer of wax between the glass and the metal. The surface of the lens which eventually will be cemented in a doublet is placed against the chuck so that the edge to be beveled in the same mounting will be the outside of the lens. Now the machine is started again and the wax reheated until it becomes soft enough

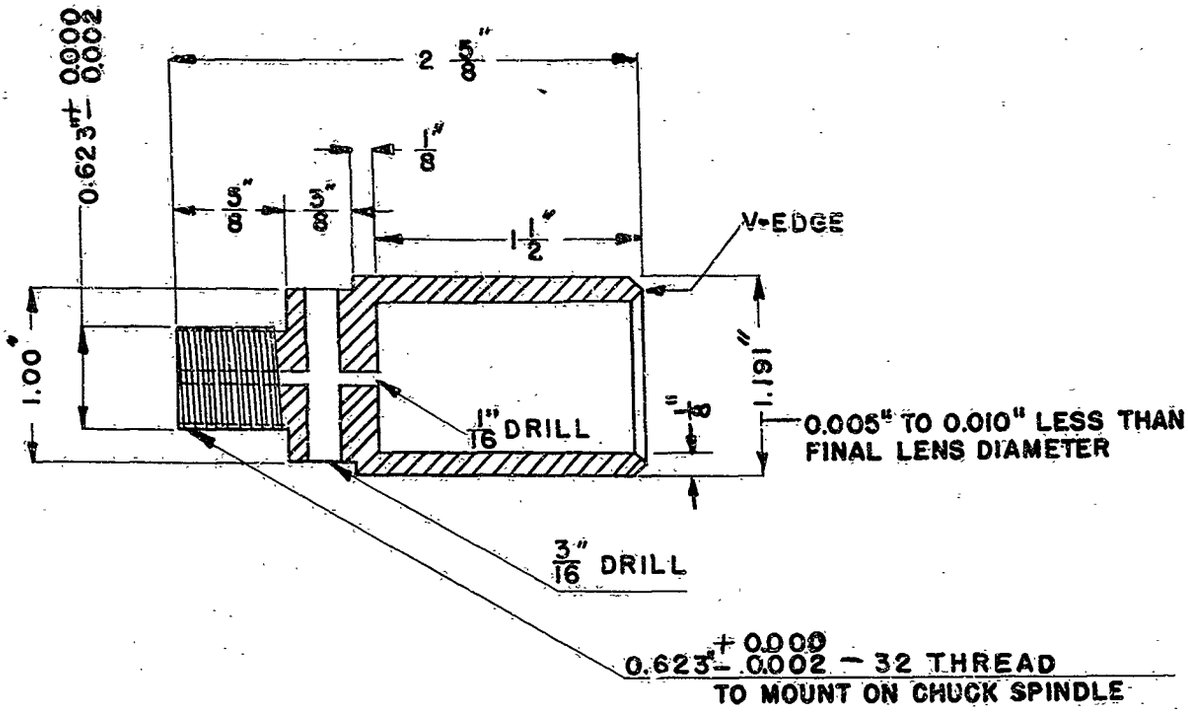

Figure 1304.—Typical Chuck for Holding a Lens on a Spindle of a Centering and Edging Machine.

to permit the lens to be moved laterally on the V-end of the chuck.

In order to bring the optical axis of the lens into exact alignment with the mechanical axis of the chuck, a finely tapered wooden stick, known as a 'centering stick', is steadied on a tool rest and the tapered end is pressed against the surface of the lens near its outer edge. Light pressure is applied to the rotating lens through this stick to move the lens gently until the images of light, that are reflected from both the inside and outside surface of the lens from a light placed to shine on it, become stationary. As the centering stick is pressed against the lens, the layer of wax between the lens and the knife-edge becomes thinner, the excess spreading to either side to form a firm binder between the lens and the sloping sides of the V-end. Care must be exercised not to put excessive pressure on the lens with the stick, since that might cause a 'chuck mark' or 'stick mark' on it, see Chapter 24. Should the lens fail to move under light pressure, the wax should be softened further by applying more heat. When the lens is centered properly, the surface of the glass must be in direct contact with the V-end of the chuck, because if this condition does not exist, the pressure of the grinding wheel on the lens will cause it to drop off the chuck.

After the lens has been centered, the chuck and the work are cooled with water applied to the chuck with a sponge. Any wax which is in an area to be ground, is removed from the outside of the revolving lens with a wax-scraping tool (Figure 1305) held on the tool rest. This must be done because the surface of the grinding wheel will be impaired if it picks up any wax.

After the lens has been centered properly on the spindle, the head of the machine is rotated to bring the spindle carrying the lens into position for grinding the edge. The grinding wheel, kept wet with a stream of water, is brought forward into contact with the edge of the lens. The micrometer is adjusted to limit the travel of the grinding wheel to the amount necessary to reduce the lens to its finished diameter. The grinding head is counterbalanced by a weight to relieve the lenses from chipping. This precaution is particularly important with small

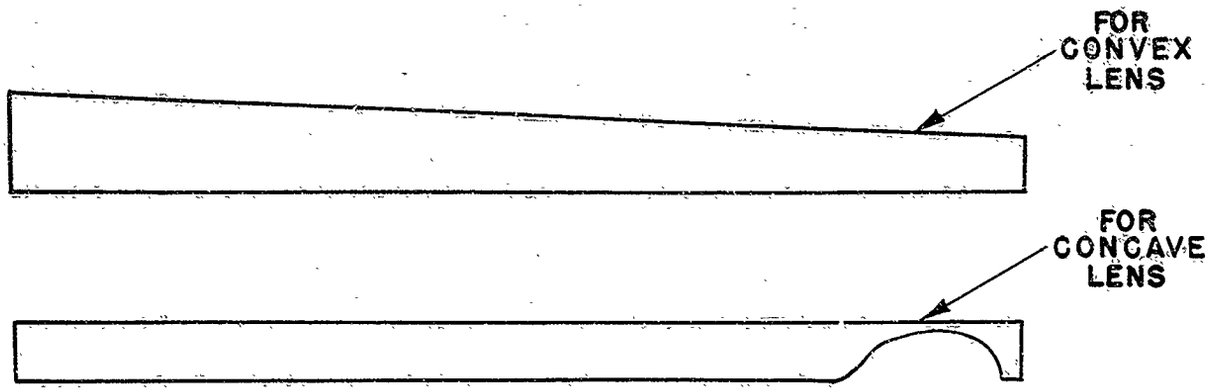

Figure 1305.—Wax-scraping Tools for Removing Excess Mounting Wax Prior to Edge Grinding.

lenses. A second lens is centered while the first lens is being edged. After the first lens has been ground to size, the wheel is set back and the head is rotated, to bring the second lens into grinding position and return the lens that has just been ground to its original position. Figure 1306 shows a lens before and after centering and edging and the amount of glass removed during the edging operation.

Beveling.—The next step, which is to bevel the lens, is done before it is removed from the spindle. To do this, FFF abrasive and water are placed on the beveling tool which is then cupped over the edge of the rotating lens. Both angular and flat bevels are illustrated in Figure 1307. When an angular bevel is desired, the radius of the surface of the tool is calculated by using formula (7) given in Chapter 7, under "Beveling." For angular bevels, the tool is held at an angle of approximately 45° with the horizontal and worked within a narrow range of movement in order to keep fresh abrasive in contact with the glass. Flat beveling is usually done by hand, the tool is flat to the work, and abrasive is added as needed. Angular beveling requires about 30 seconds unless small chips are to be removed, in which case 60 to 90 seconds may be necessary. When

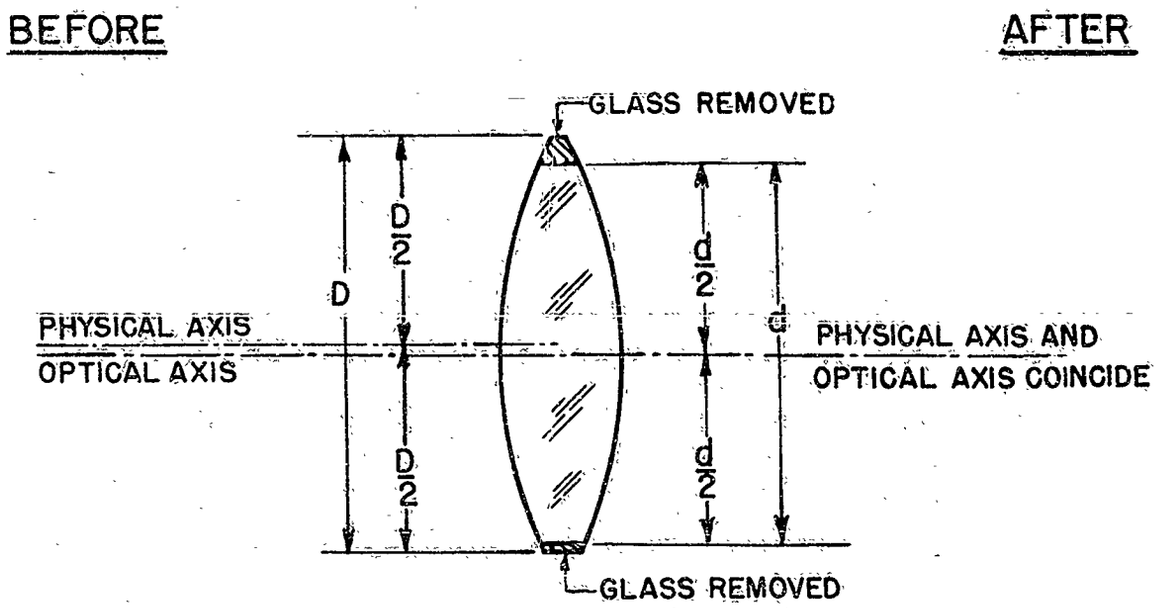

Figure 1306.—Centering and Edging a Prismatic Lens to Make Physical Axis Coincide with Optical Axis.

beveling is completed, clean water is squeezed from the sponge over the lens and chuck to remove any abrasive, and the surface is dried with a clean paper towel. After beveling, the lens is removed by heating the chuck just sufficiently to melt the wax.

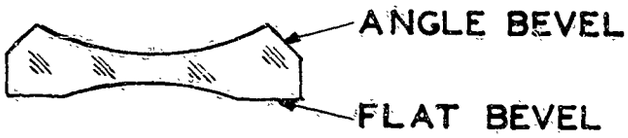

Figure 1307.—Types of Bevels.

Next the lens is soaked in alcohol to dissolve any wax that may still adhere to it. Any gritty filler from the wax which remains on the lens is brushed off carefully with a soft camel's-hair brush.

After this the lens is rinsed in clean alcohol, dried with a clean piece of cheesecloth to prevent staining, inspected for chips and scratches, and wrapped in lens paper.

CENTERING AND EDGING MACHINES USED BY VARIOUS MANUFACTURERS

Eastman Kodak Company

The Hawk-Eye Works of Eastman Kodak Company has designed and built centering equipment which accurately centers spherical optical elements automatically. The fundamental principle of this patented equipment is that, when two accurately aligned cups are pressed against the surfaces of a spherical element, they will automatically position the element so that its optical axis will coincide with the mechanical axis of the shafts on which the cups are mounted. The optical element, held by the cups, is rotated against a rotating grinding wheel, and ground to the desired diameter. A lens of long radius cannot be centered by this method because the curvature of such a lens does not provide sufficient centering action. If desired, the grinding wheel can be dressed so that it will grind one or two bevels on the element while it is being edged.

This machine is made in two sizes. The large size handles elements from 1¾ inch to 10 inches in diameter while the small size takes lenses from 3/16 inch to 1¾ inch in diameter.

Large Machine.—The large machine shown in Figure 1308 is automatic in its operation to a large extent, which enables one operator to run two or more machines. Figure 1308(a) shows the shafts and cups before inserting the optical element. It also shows the G–220–UW grinding wheel, which has a 45° and a 60° bevel on its edges and runs at a speed of approximately 860 rpm. The equipment is so designed that the wheel can be moved longitudinally along its axis so that when raised, its edge will be either in the position for edging or the position for beveling, whichever is desired. The wheel is re-dressed, after each lens is edged, by a dressing tool set in back of the cups and not shown in the figure. The nozzles, by means of which a constant stream of water is kept flowing over the grinding wheel, can be seen in front of the cups in Figure 1308(a), (b), and (c). Normally, spherical elements can be edged on this equipment to within 0.0005 inch.

Procedure.—The first step in operating the large machine, after it has been adjusted for a particular element, is to be sure that the cups are absolutely clean and free from foreign material, particularly glass particles. This is important, because such material will affect the accuracy of the centering and may cause scratches. After the element has been placed between the cups and centered approximately by eye, the cups are forced toward each surface by air pressure to center the element accurately. The micrometer is set for the proper diameter. The machine is started; the water starts flowing; the element and the grinding wheel start rotating; and the grinding wheel begins to oscillate along its axis. Then the wheel is raised to the cutting position, see Figure 1308(b). As soon as the element has been edged to the correct diameter, the rotation and oscillation of the grinding wheel are stopped. The wheel is then lowered and moved along its axis to the beveling position. The micrometer stop is set for the desired bevel, the machine is started again, and the wheel is raised to the bevel-cutting position, as shown in Figure

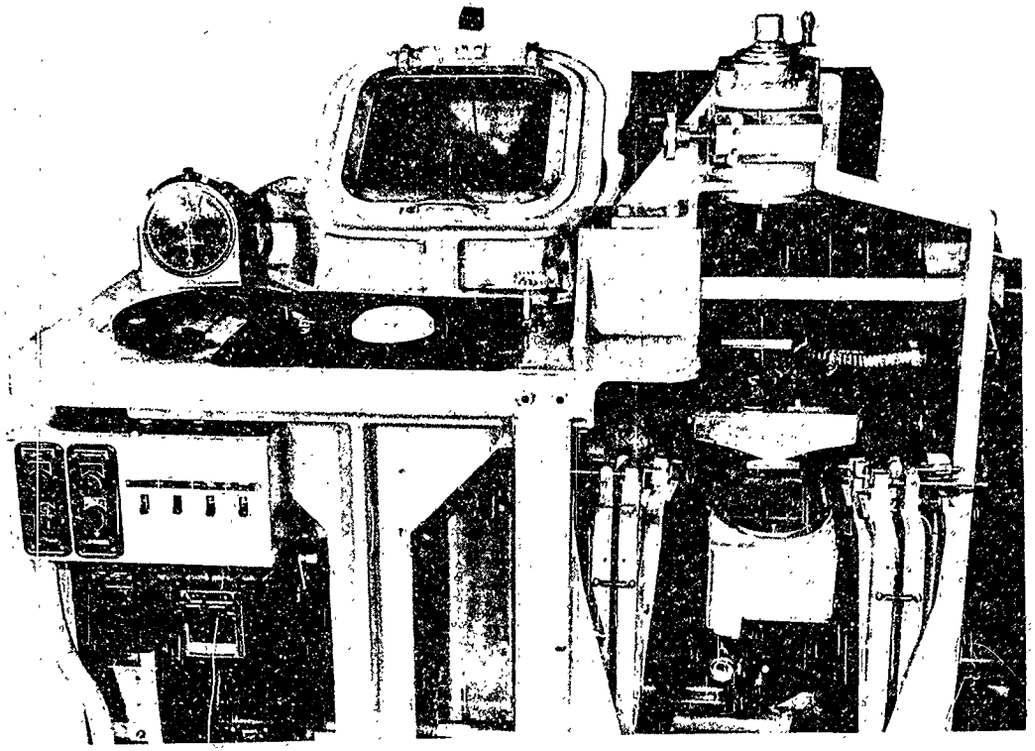

Eastman Kodak Company

Figure 1308.—Cup-aligned Type Centering and Edging Machine.

POSITIONS OF CUP SPINDLES AND GRINDING WHEEI

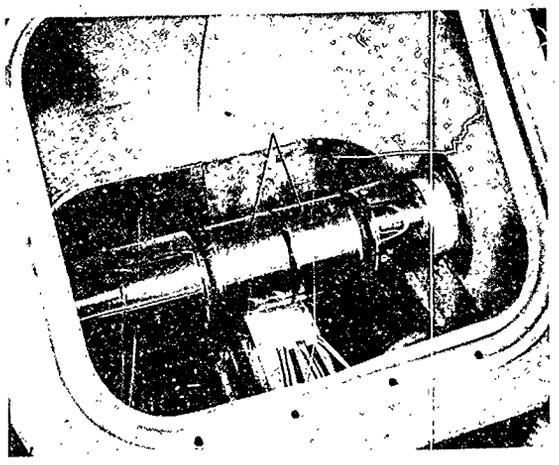

(a) Before Loading

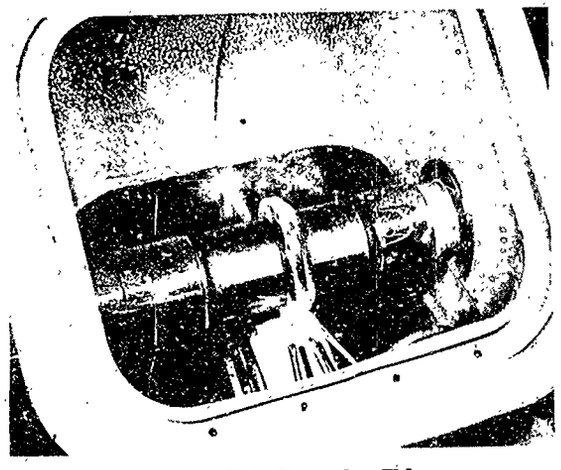

(b) Grinding the Edge

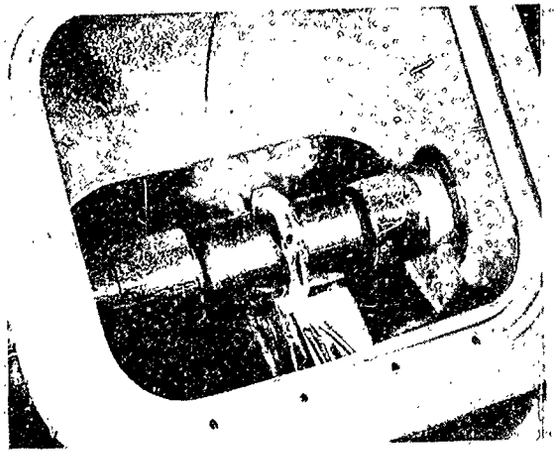

(c) Beveling the Edge

1308 (c). When the beveling operation is completed, the wheel is lowered, returned to its original position, the machine stopped, the air pressure turned off, the element removed from the cups and checked for diameter and bevel.

Small Machine.—The small machine shown in Figure 1309 is similar to the larger machine in most details, but is semi-automatic so that one operator can operate a battery of six machines. Tolerances on this equipment can be held to within 0.0002 inch.

Procedure.—The small centering machine requires the operator only to be sure that the cups are thoroughly clean, to insert the element between them, and to press the button shown in the opening in the front (Figure 1309). The machine carries out the remainder of the operation, stopping automatically when the operation is finished. However, a hand air-release valve is provided for emergency use. This equipment uses the same cycle as the larger machine and can be made to bevel both edges in sequence without dismounting the lens. Like the larger machine, it has a micrometer that can be set to give the lens the desired finished aperture (Figure 1306).

The operator should check the finished element for diameter, because this is controlled by the only machine adjustment that the operator makes. An instrument for checking the concentricity of edged elements is shown in Figure 2421.

Shuron Optical Company

This machine uses the patent of Eastman Kodak Company. Like the machine of that Company, it is designed to center and edge a spherical lens automatically and to eliminate the necessity of waxing the lens to a chuck.

To make room for placing a lens in the machine, (see Figure 1310), lever 3 is moved to the right to separate cups 1 and 2. The lens, with a piece of tissue paper folded over it is held between the cups with the left hand, and lever 3 is moved with the right hand to the left until the cups press against the lens lightly. Lever 3 then is moved farther to the left, exerting considerable pressure and causing it to center automatically. The excess paper is torn away and the lens is ready to be edged.

Next the carriage is lifted by raising lever 3, and the rotation of the lens is started by moving lever 6 so that it points up. Then lever 5 is released and the carriage is lowered carefully by lever 3 until the lens touches the carborundum or diamond wheel. A preliminary light cut is made around the lens, the diameter is measured with a micrometer, and dial 4, which reads in thousandths of an inch, is set for the diameter desired.

New Jersey Machine Corporation

The New Jersey Machine Corporation centering and edging machine is illustrated in Figure 1311. Machines similar to it are used by the optical departments of Naval Gun Factory and Keuffel & Esser Company.

Centering and Edging.—When using the machine for combined centering and edging, the procedure is the same as with an Elgin, Jorgan–Anderson, or other standard commercial centering and edging machine.

The centering may be done separately, if desired, either in a lens-centering instrument as shown in Figure 1312, or on a rotating spindle. In either case the chuck is mounted on a tapered fixture, Figure 1313, which is used because it provides a more accurate alignment in the edging machine than if a screwed mount were used.

If the lens is to be centered on a chuck held in a rotating spindle, the tapered insert, Figure 1313, with the chuck attached, is mounted in the spindle, which is then set in motion and the centering is done in the normal manner. After the lens has been centered, the fixture

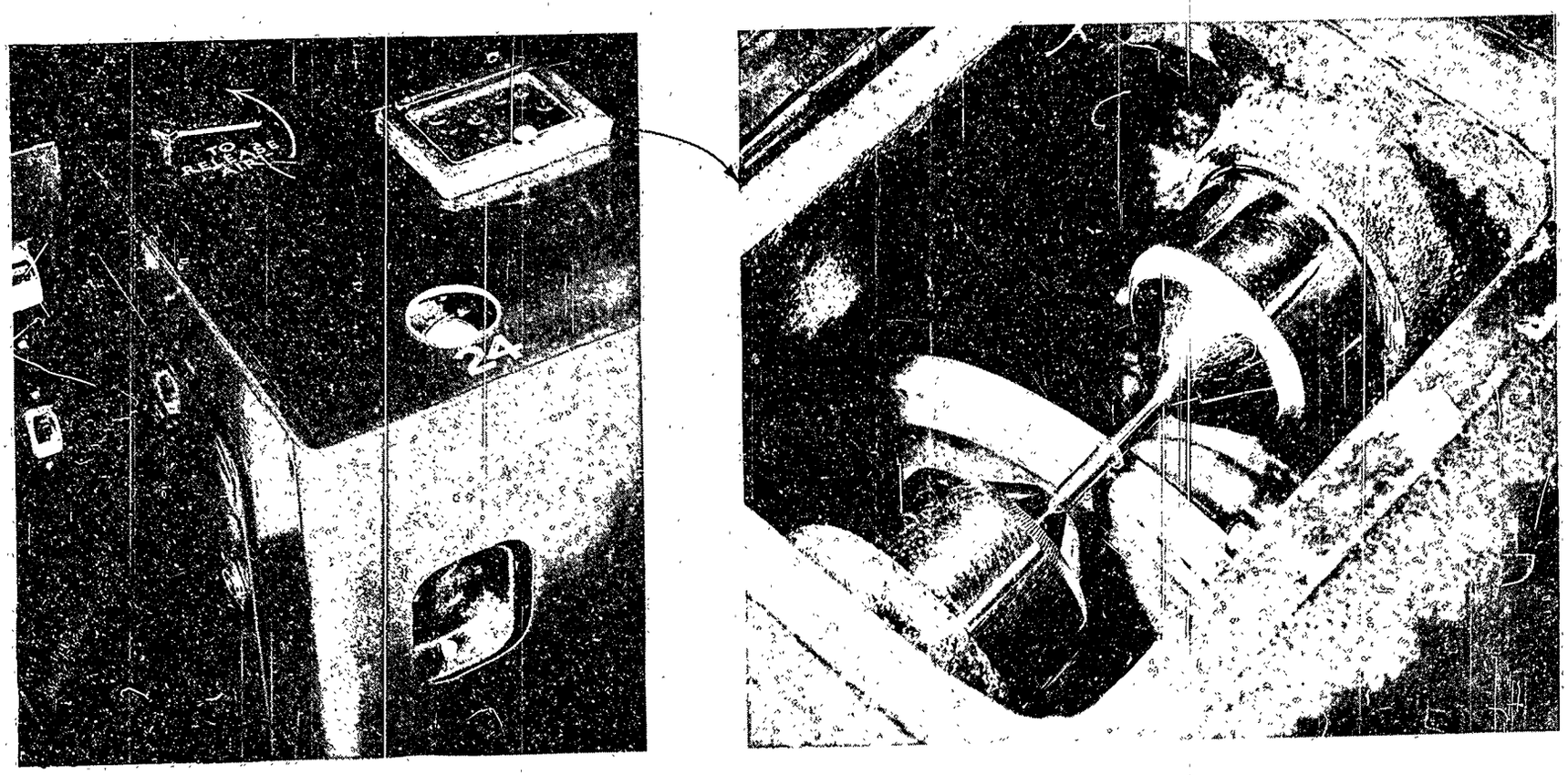

Eastman Kodak Company

Figure 1309.—Centering and Edging Machine for Centering, Edging, and Beveling Small Lenses.

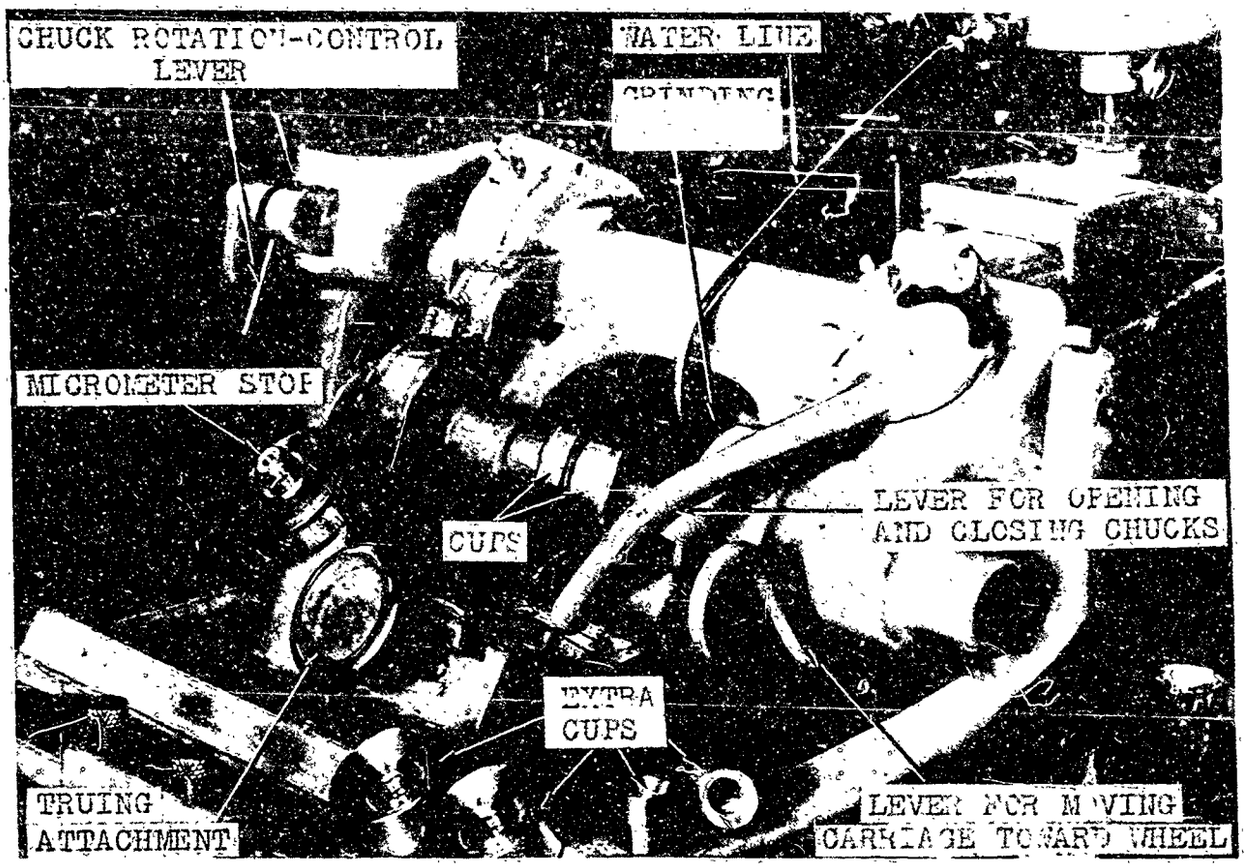

Shuron Optical Company

Figure 1310.—Cup-aligned Type Centering and Edging Machine.

with the chuck is inserted in the edging machine, Figure 1311, and the lens is edged by the usual procedures already described.

The procedure for centering a lens using a lens-centering instrument, as shown in Figure 1312, is described later in this chapter.

The following procedure is used to set the machine for edging lenses to any desired diameter automatically. After the lens is mounted on the spindle of the machine, the micrometer dial, which controls the setting for the desired diameter, is turned clockwise until the grinding wheel makes no contact with the edge of the lens. The pawl is lifted from the automatic feed ratchet wheel so that this wheel will have no effect while the initial lens is being edged.

The oscillation of the lens is set by adjusting the oscillating control arm so that the lens travels the full width of the wheel face, but not beyond it on either side. If the lens goes beyond the face of the wheel, it may be pulled off the chuck or its edges may be chipped. The longitudinal position of the grinding wheel with relation to the axis of the machine is set by turning the knurled disk. The three switches which control the grinding wheel, the lens-spindle with the lens, and the lens-oscillating mechanism, are turned on in the order named. Next the water valve is opened. The catch lever is raised with the right hand to release the grinding wheel and thus permit it to be pulled into contact with the lens by the pressure spring. As grinding continues, the micrometer dial is backed off with the left hand. When the element has been ground to the proper diameter, the micrometer dial is locked and the

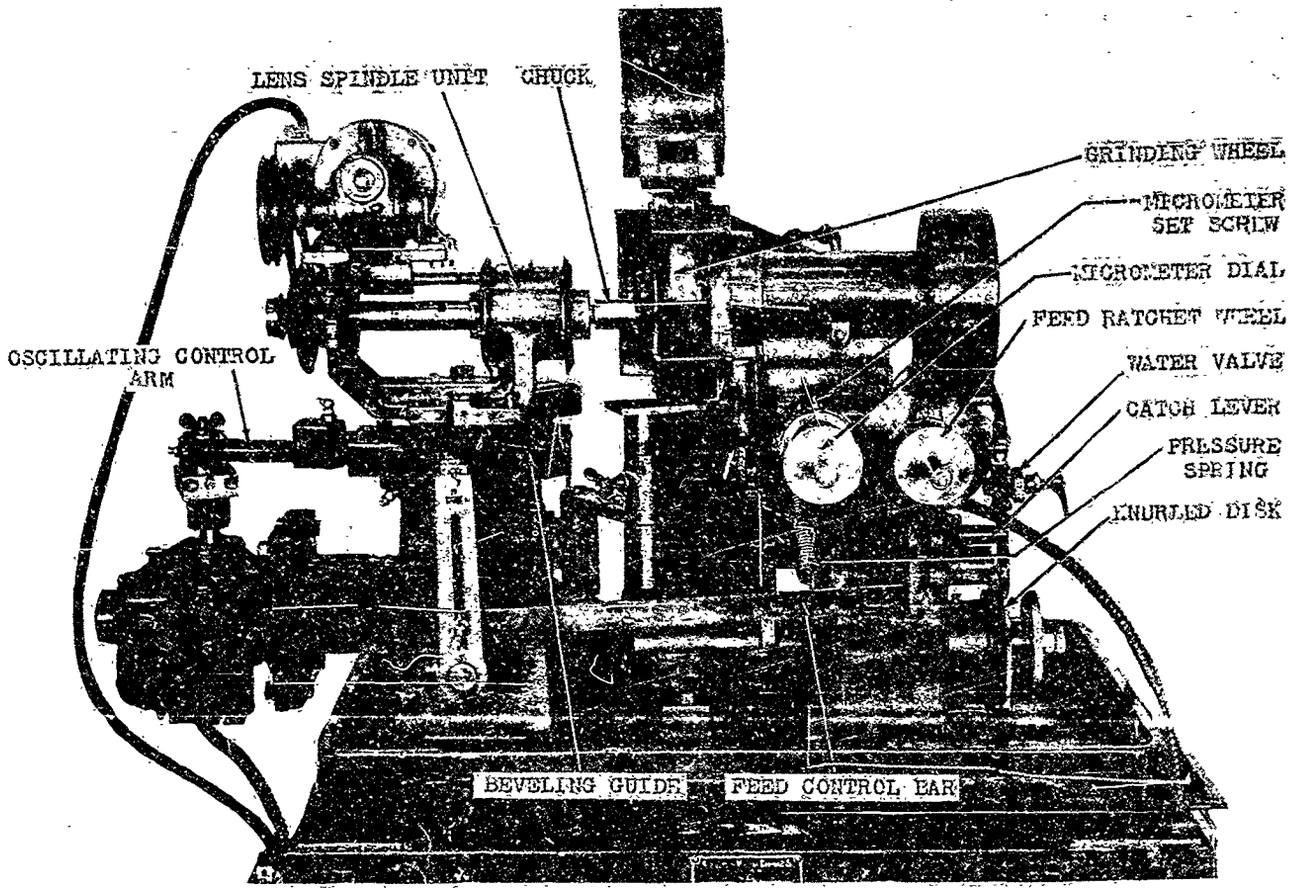

New Jersey Machine Corporation

Figure 1311.—Single-spindle Centering and Edging Machine.

automatic stop is set by tightening the micrometer setscrew.

When the micrometer dial has been set properly, the automatic feed mechanism for the grinding wheel is set by adjusting the feed control bar in the slotted levers at each end and tightening the wing nuts to hold it in position. Then the pawl is replaced on the feed ratchet wheel and the automatic feed for the grinding wheel is ready to operate. Care must be exercised in adjusting this feed because too much feed per stroke will cause excessive pressure on the lens, while too little will cause the operation to consume too much time.

After each element is ground to diameter, the pawl is raised and the feed ratchet wheel is returned to its starting position, which moves the grinding wheel away from the element.

To summarize, the spindle on which the lens is mounted reciprocates in front of the grinding wheel, which is fed towards the lens by a ratchet and pawl mechanism operating a micro-feed, until it comes up against a dead stop which has been set previously for the required diameter. The hollow quill, tapered for quick removal from its spindle, is mounted on a reciprocating slide, the maximum stroke of which is 2 inches. The maximum grinding wheel diameter is 7 inches which permits the machine to edge a lens 3 inches in diameter. The grinding wheel operates at 2100 rpm while the spindle speed varies from 175 rpm to 500 rpm.

Beveling.—The lens-spindle unit can be swung in a circular beveling guide so that, if desired, the grinding wheel can be used for

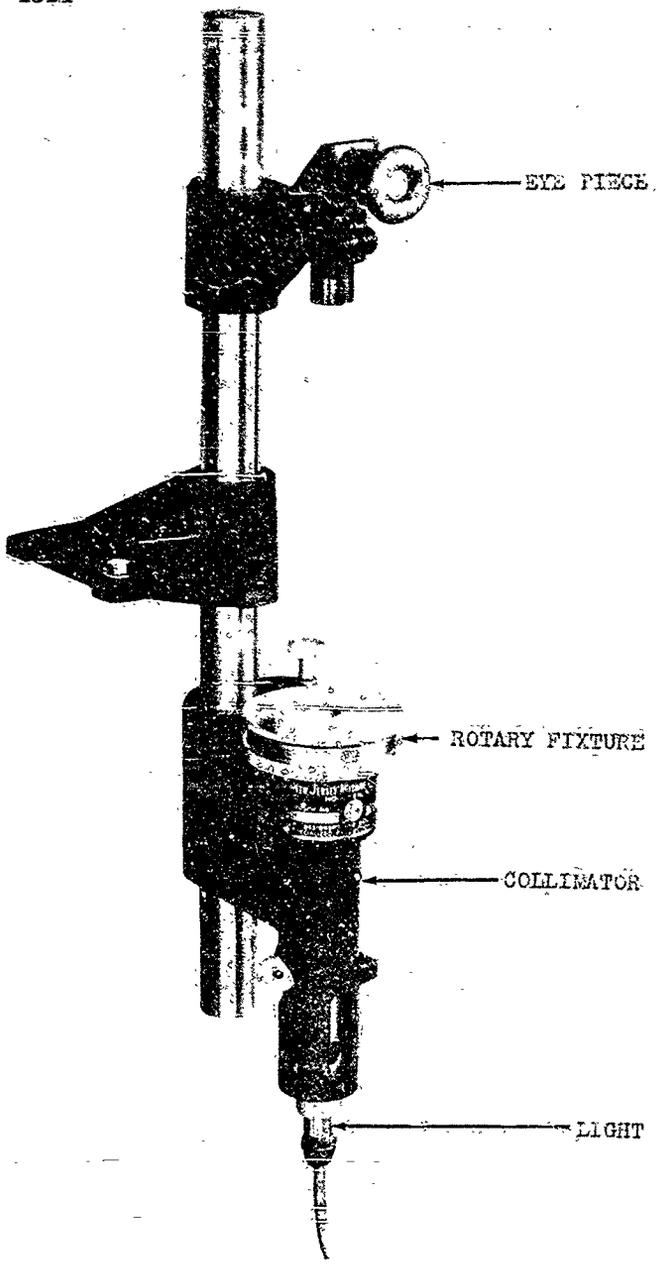

New Jersey Machine Corporation

Figure 1312.—Instrument for Optically Centering a Lens on a Chuck Prior to Mounting on an Edge Grinding Machine. (Model 89)

beveling, the maximum angle of bevel being 55°. It is not practical, however, to use the same machine for both grinding to diameter and beveling one lens after another. This is because the lens-spindle unit cannot be returned from the beveling position setting for diameter grinding without careful adjustment. Accordingly, separate machines should be used for grinding to diameter and for beveling.

Centering Only. — The lens-centering instrument used by the Optical Department of Washington Navy Yard (see Figure 1312) uses a transmitted image instead of a reflected image and makes the lens being centered a part of the optical system of the instrument. The instrument consists of a stand supporting an upper telescope of the elbow type, equipped with a reticle with an open center, and aligned with a lower collimator tube arranged for carrying both the tapered lens holding spindle, Figure 1313, and centering chuck, Figure 1314, on top and with an adjustable illuminated reticle unit in the bottom. The collimator tube can be moved to suit the focal length of the lens being centered and is fitted with a draw-in mechanism for accommodating the tapered lens-holding spindle. When this spindle with its centering chuck is inserted in the top end of the collimator tube, the thread on the spindle engages the thread in the draw-in mechanism which aligns the spindle in the instrument accurately. The edge of the centering chuck is coated with a cement of the Dupont Household type and the lens is placed on top of the chuck. The instrument operates by passing a beam of light from a small lamp at the bottom of the instrument successively through the lower tube, its reticle, the lens to be centered, and through the reticle of the top telescope to the eyepiece. The lens is centered by moving it around on the chuck with one hand, until the cross lines of the bottom reticle line up with the open center of the top reticle and remain stationary, as the whole top part of the lower tube is rotated with the other hand.

After the lens has been centered on the chuck, the entire unit including tapered spindle, chuck, and lens, is removed and placed in a rack vertically to permit the cement to dry sufficiently to hold the lens for edge grinding. This usually requires about two hours. If too much time elapses between centering and edge grinding, the cement may become too brittle to hold the lens securely.

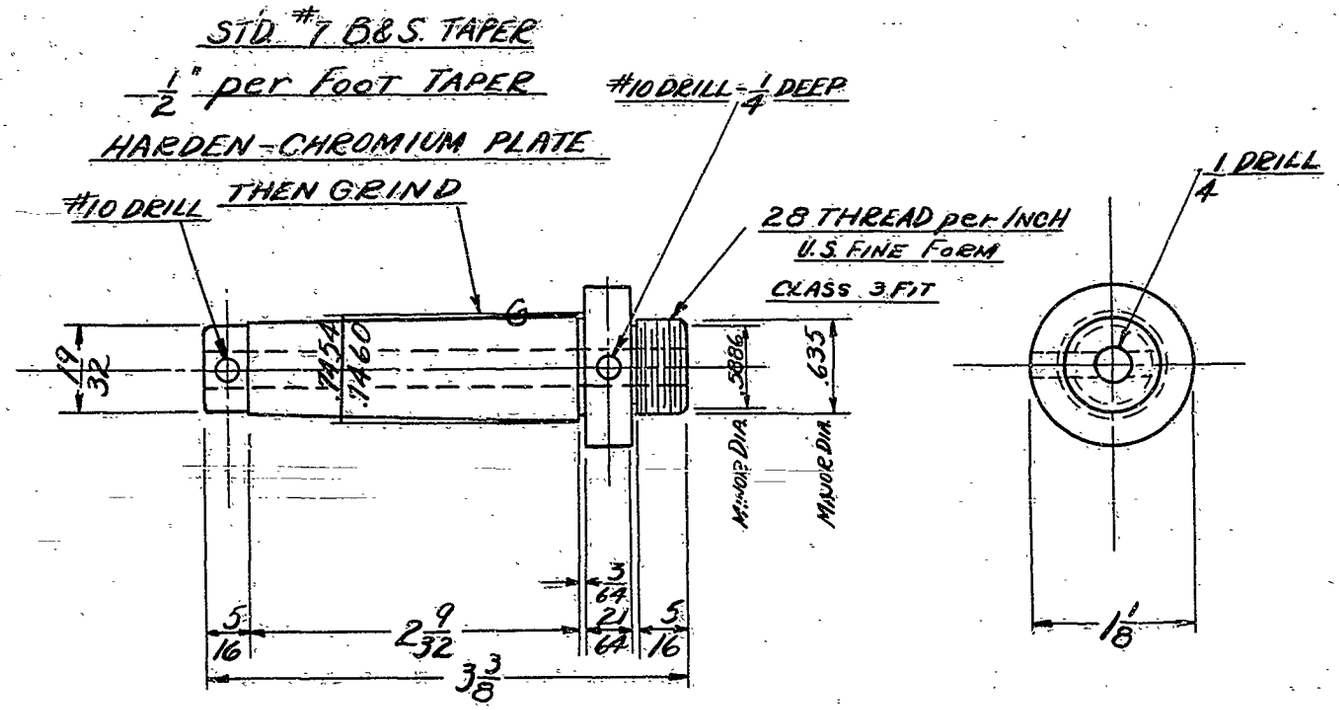

HARDEN-CHROMIUM PLATE-GRIND ON TAPERED SECTION ONLY

New Jersey Machine Corporation

Figure 1313.—Lens-holding Spindle for Centering.

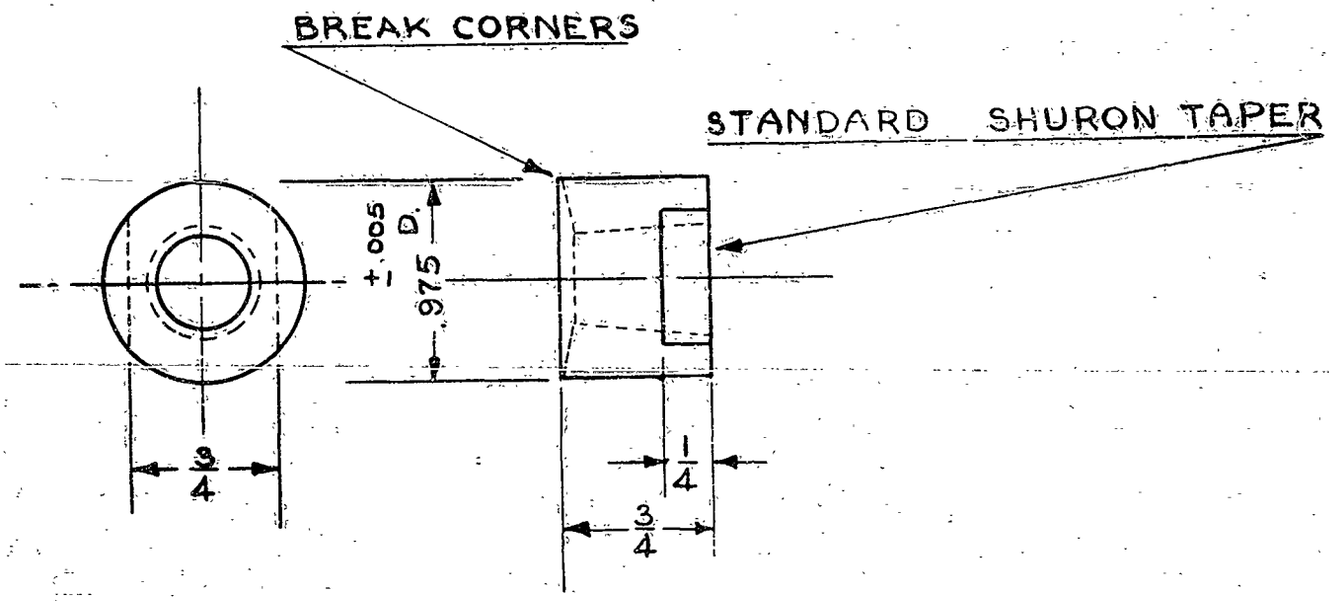

Optical Research, Incorporated

Figure 1314.—Centering Chuck for Tapered Spindle of Centering and Edging Machine.

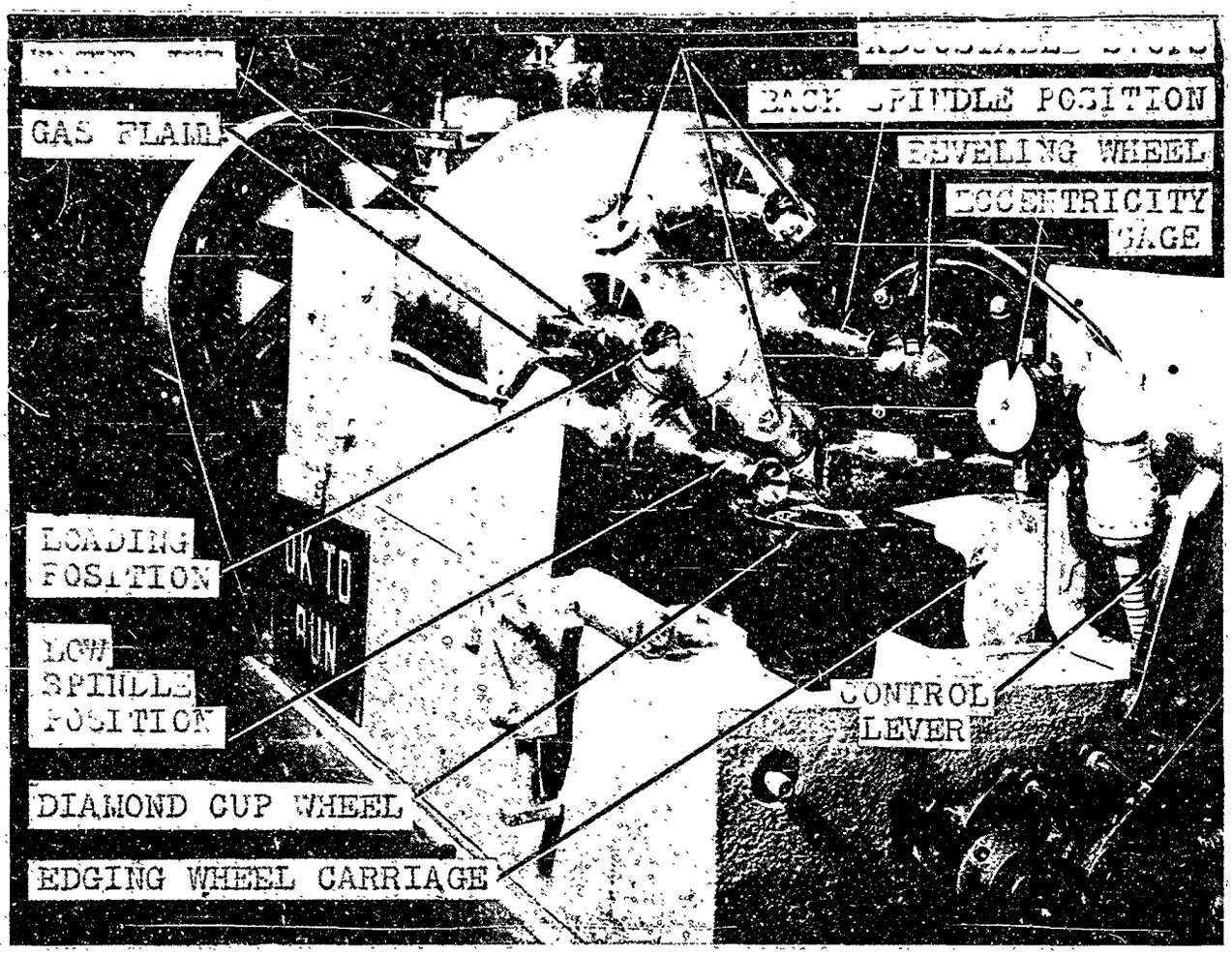

Universal Camera Corporation

Figure 1315.—Four-spindle Centering and Edging Machine.

Bell & Howell Company

This company has developed a series of three separate machines for centering, edging, and beveling lenses. The centering machine consists of a head for driving a shaft that has a hollow taper. The shaft receives a tapered quill which carries a chuck on which the lens is mounted with wax in the usual manner and centered, using either reflected or transmitted images. When the lens has been centered, the quill with the lens and chuck is removed and inserted in the head of the centering machine. This machine embodies a head for receiving and driving the quill, and is equipped with a cup-shaped diamond wheel, the axis of which is horizontal and perpendicular to the axis of rotation of the quill. This arrangement of grinding wheel and quill insures that the edge of the lens will be flat. In addition, the machine has a feeding device and a suitable stop for controlling the grinding operation. Because the quill carrying the lens can be removed and replaced with a new one quickly, the edging machine is grinding almost continuously.

After the lens has been edged, it is transferred, while still mounted on the quill, to a beveling machine, which contains a head for receiving and driving the quill and a bed for supporting the abrasive wheel. This wheel can be set to grind a bevel of any desired angle on the lens, is fed by means of a hand-operated lever, and is equipped with a micrometer stop. It is practicable with this type of beveling machine to grind a bevel that is of any desired angle and width and that runs true with the

periphery of the lens. After the lens has been beveled, it is removed from the quill, which is then ready to receive another lens for processing.

Universal Camera Corporation

This edging machine is of the four-spindle manually-indexed turret type and is illustrated in Figure 1315. The lens to be edged is centered on the spindle in front or loading position. The speed of the spindle is controlled by a foot pedal, so that it may be stopped for mounting the lens on the chuck or driven at a fairly high speed for centering.

Both a stationary gas flame for heating, and a water jet for cooling the chuck and lens, are operated by an additional foot pedal. Forward pressure on this pedal controls the gas flame, and backward pressure controls the water supply.

The actual grinding of the lens is done in the low position of the spindle with a 4-inch, high-speed, metal-bonded diamond-cup wheel mounted in a horizontal position with its axis slightly forward of the plane of the surface of the chuck and with the center of the cutting surface directly under the axis of the spindle. Thus the grinding action is accomplished by the motion of the diamond particles on the wheel moving across the edge of the lens in a horizontal path as opposed to the standard method of cutting in a vertical plane. Since this prevents any uneven wear on the wheel from affecting the accuracy of the grinding, it is not necessary for either the lens or grinding wheel to oscillate. The diamond wheel is mounted on a carriage that is pivoted on an axis parallel to that of the spindles. When the grinding has been completed, the carriage is lowered away from contact with the lens, by

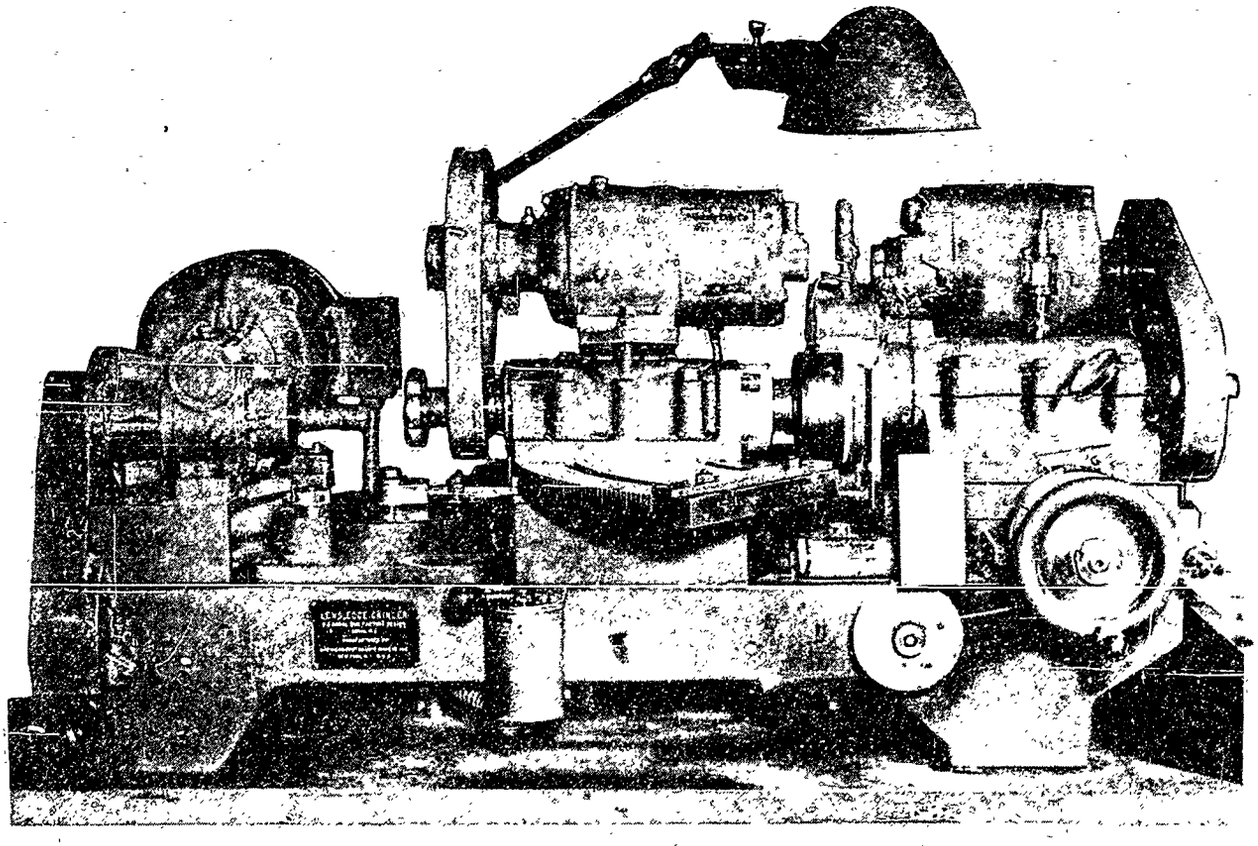

Spencer Lens Company

Figure 1316.—Single-spindle Machine for Centering, Edging, and Beveling Large Lenses.

operating the control lever. The turret is then indexed to bring another lens into position, and the carriage is raised again for grinding. The carriage is pushed upwards by a pressure spring, controlled by a dash-pot mechanism, and its travel is limited by adjustable stops, one on each of the four spindles, which are set individually to correspond to the finished diameter of the lens being ground. An indicator shows whether the carriage is 'feeding up' or whether it has come to a full stop because the grinding on the lens has been completed.

The back spindle position is used to bevel the lens on the side on which it is mounted. A small motor with a metal-bonded beveling wheel is mounted on the carriage that carries the edging wheel, and as the latter moves up during the grinding operation, the beveling wheel bevels the edge of the lens on the spindle in the back position.

Spencer Lens Company

American Cystoscope Makers, Inc., manufacture a heavy duty machine, designed by Naval Gun Factory, that is used by Spencer Lens Company to center, edge, and bevel large lenses. It is illustrated in Figure 1316.

CHAPTER 14

SMALL ABBE PRISMS

	Page No.
Pressing Surfaces.	1402
First Side (Rough Grind).	1402
Second Side (Rough Grind).	1402
End 45° Faces (Rough Grind).	1402
Hypotenuse.	1407
Transferring to 90° V-blocks.	1407
Mounting the 90° V-blocks.	1407
Rough Grinding.	1407
Fine Grinding and Polishing.	1407
Top.	1407
First Side (Fine Grind and Polish).	1408
Correcting One Side.	1408
Mounting.	1408
Fine Grinding and Polishing.	1409
Second Side (Fine Grind and Polish).	1409
Prism Surfaces.	1409
Diagonal 45° Face and Side.	1409
Sawing Pressings into Prism Blanks.	1409
Mounting in Pin Fixture.	1409
Rough Grinding Side.	1410
Fine Grinding and Polishing Diagonal 45° Face.	1410
End 45° Face (Fine Grind and Polish).	1413

For the manufacture of small abbe prisms, Minneapolis-Honeywell Regulator Company has developed a procedure that permits the use of operators who are not highly skilled in the techniques of processing flat surfaces. The procedure makes use of special precision-ground fixtures to reduce the difficulty of obtaining the desired accuracy of angles and dimensions in the finished element. While the special fixtures reduce the amount of difficult precision gaging that would otherwise be required, they must be used with care and they must be clean. The presence of dirt, burrs, or particles of rust or abrasive will affect their performance very seriously. Moreover, the fixtures must be made of a material which will permit them to withstand repeated heating and quenching without appreciable corrosion, warpage, or growth. While fine gray cast iron can be used, 'meehanite E–15' has given better results and is somewhat denser and more machinable. In general, the fixtures are held to closer tolerances than are the prisms, some fixture tolerances being only one-tenth as great as the corresponding tolerances for the prisms. It is good practice to check the accuracy of the fixtures from time to time to verify that their angles and dimensions are within the desired tolerances.

The general procedure used to manufacture the prism is outlined briefly in this chapter. As the rough grinding is done on automatic machinery as described in Chapter 5, *Rough Grinding Prisms with Automatic Machinery*, and the fine grinding and polishing follows the procedures outlined in Chapter 11, *Fine Grinding and Polishing Flatwork*, these operations are not discussed in detail. It is assumed in this chapter that the glass is furnished in the form of pressings, as shown in Figure 1401. However, if only slab glass was available, it would be sawed into the proper shape and then processed in the same manner as for pressings.

PRESSING SURFACES

First Side (Rough Grind). — After a preliminary hand grinding to remove any gross surface irregularities, the pressings are mounted on a blocking plate for grinding the first side, (see Figure 1402 and Chapter 9, *Blocking Flatwork*). The first side is rough ground as described in Chapter 5, *Rough Grinding Prisms With Automatic Machinery*.

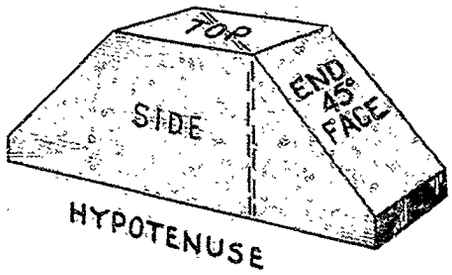

Minneapolis-Honeywell Regulator Company

Figure 1401.—Pressing for Making a Pair of Small Abbe Prisms.

Second Side (Rough Grind).—The pressings are transferred to a second flat-blocking plate (see Figure 1403, and Chapter 9 under "Transferring Glass Plates") and rough ground on the second side.

End 45° Faces (Rough Grind).—A group of eleven pressings is waxed on a special 45°-angle fixture, see Figure 1404(a), which is equipped with two end plates. One of these end plates is attached to the fixture permanently and is ground to make an angle of 90° with the surfaces of the fixture, with tolerance of ± ½ minute. The other end plate is removable, carries two pressure screws, and has openings to permit the 'indicator point' and the fixed pin, both of the gaging fixture, described later, to pass through it freely.

The 45°-angle fixture and the group of pressings is heated sufficiently to melt wax. The fixture is placed temporarily in a 90° V-block (see Figure 1405). The group of pressings is then mounted, using a thin layer of wax under the pressings and between them. Next the 45°-angle fixture is placed on a special 90°-angle gaging fixture, the gage of which has been set to read zero when the end of the indicator point is vertically over the end of the fixed pin (see Figure 1406). After being placed on the gaging fixture, the 45°-angle fixture is slid along the gaging fixture until the pins of the latter pass through the temporary end plate of the 45°-angle fixture. After this, the screws in the temporary end plate are adjusted

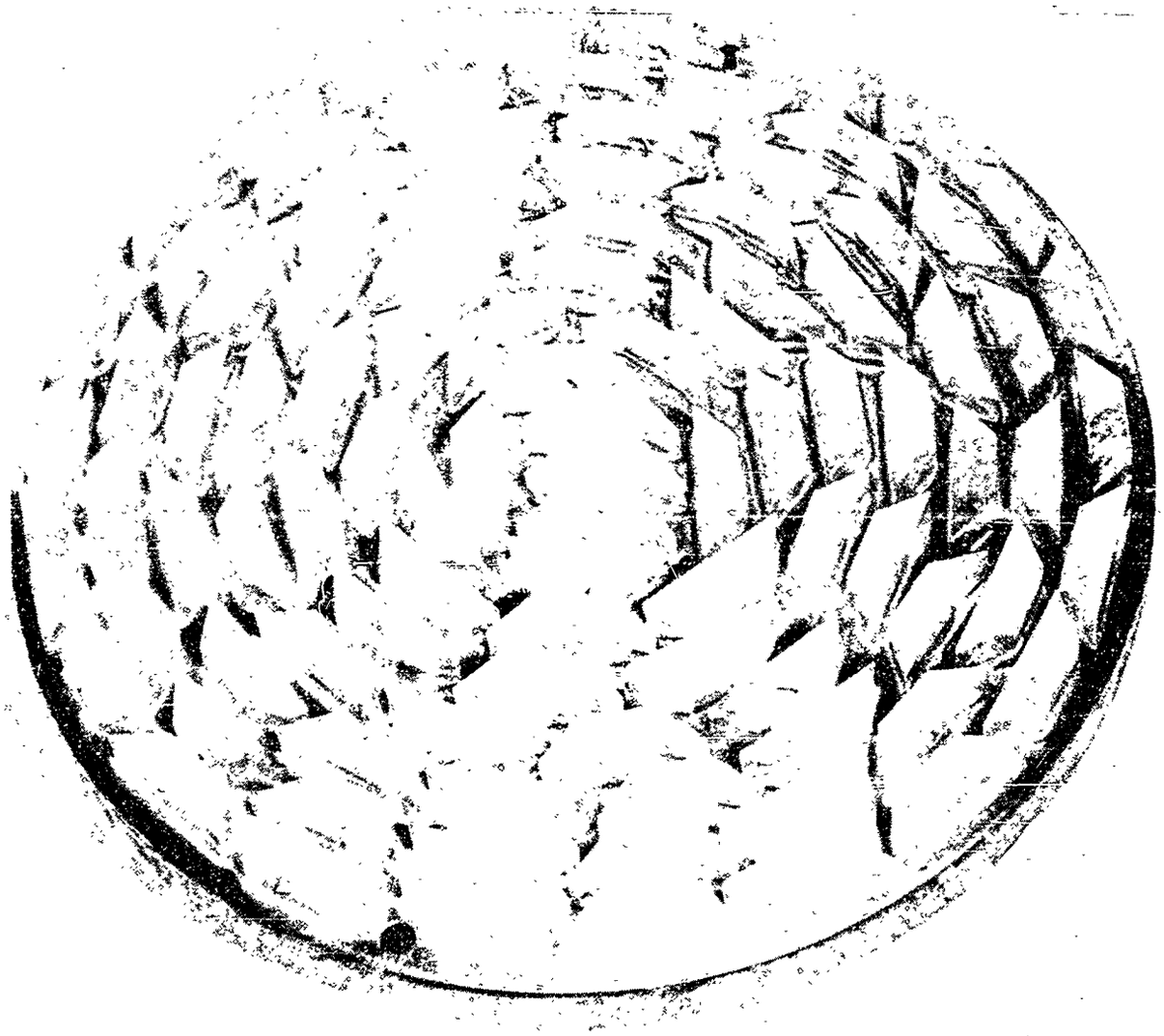

Minneapolis-Honeywell Regulator Company

Figure 1402.—Arrangement of Pressings Mounted on a Blocking Plate for Grinding One Side.

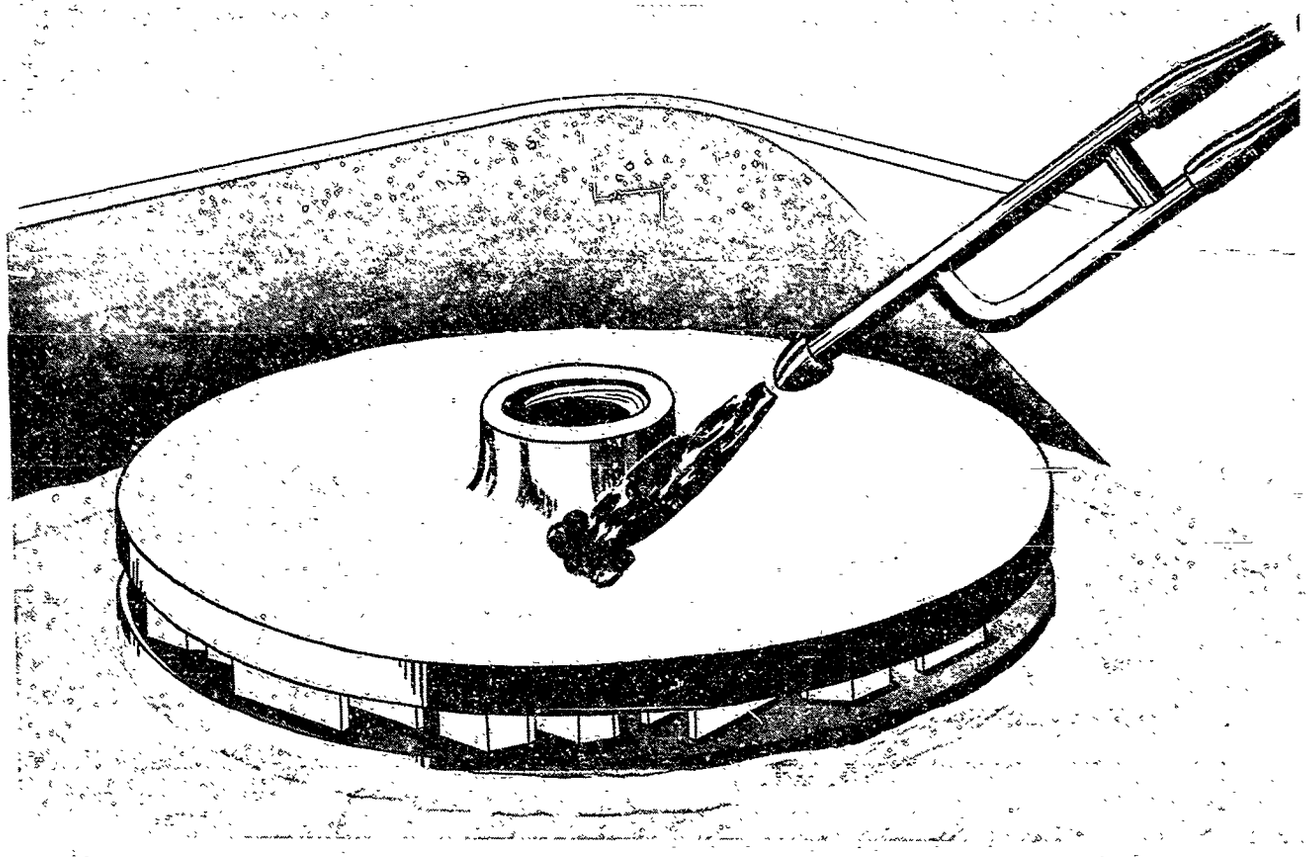

Minneapolis–Honeywell Regulator Company

Figure 1403.—Transferring.
Heating to remove the first-side blocking plate.

so that the pressings are in firm contact with each other and with the permanent end plate. Next the 45°-angle fixture, with the pressings, is slid further along the gaging fixture until the end of the fixed pin touches the side of the end pressing. This contact of the fixed pin is maintained while the screws are adjusted further until the gage reads zero. This reading then indicates that the sides of all of the pressings are parallel to each other and to the permanent end plate, that there is a uniformly thick layer of wax between each pair, and that the sides of the pressings that have been rough ground are perpendicular to the hypotenuse of the 45°- angle fixture.

After the pressings have been mounted properly, the 45°-angle fixture with the pressings is removed from the gaging fixture and allowed to cool. When the wax has set, the temporary end plate is removed and the loaded fixture is ready for further processing. It should be noted here, that any inaccuracy in mounting the pressings on the 45°-angle fixture will affect the accuracy of the 90° angle between the sides and hypotenuse of the finished prisms.

To rough grind one end 45° face, a group of 45°-angle fixtures, loaded with pressings, is bolted on a blocking plate in an arrangement similar to that shown in Figure 1404(b). In mounting these fixtures, care must be taken to clean all contacting surfaces thoroughly, because any dirt, burrs, rust or wax between the fixtures and the blocking plate will affect the accuracy of the ground surfaces. As a further precaution, the blocking plate is first given a thin coat of light machine oil to protect the surfaces and improve the quality of the contact between the fixtures and the plate. When one end 45° face has been ground, the 45°-angle

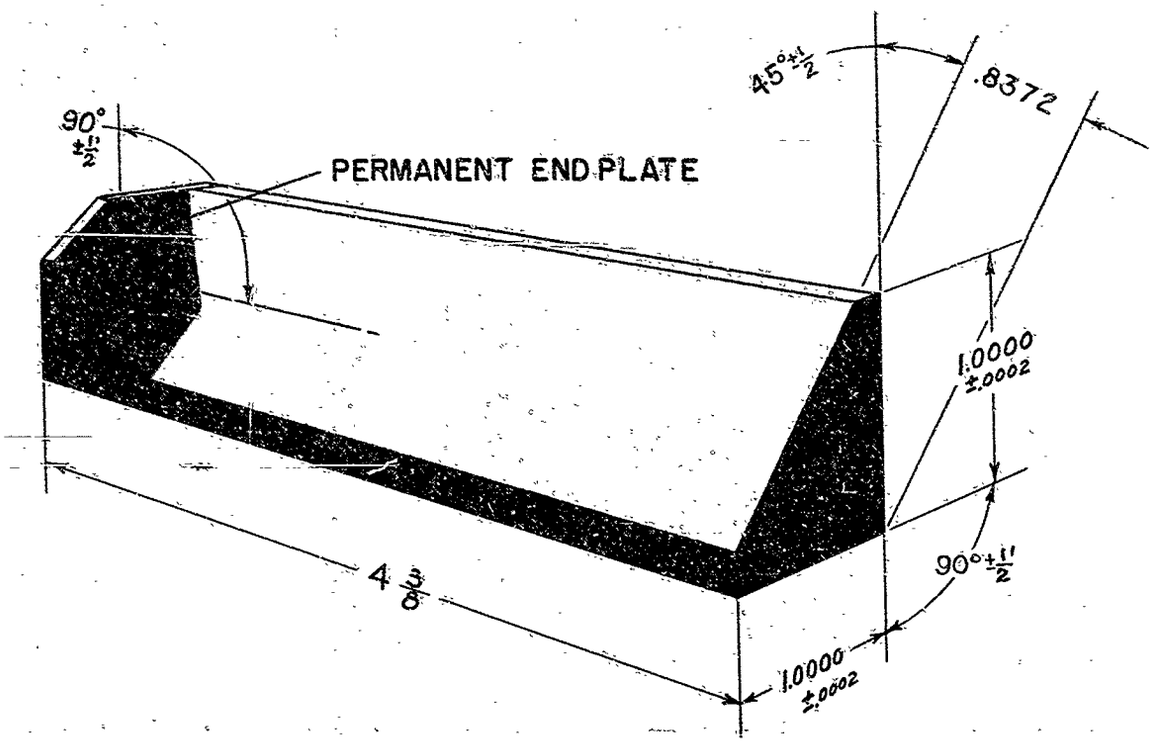

(a) 45°-angle Fixture with Temporary End Plate Removed

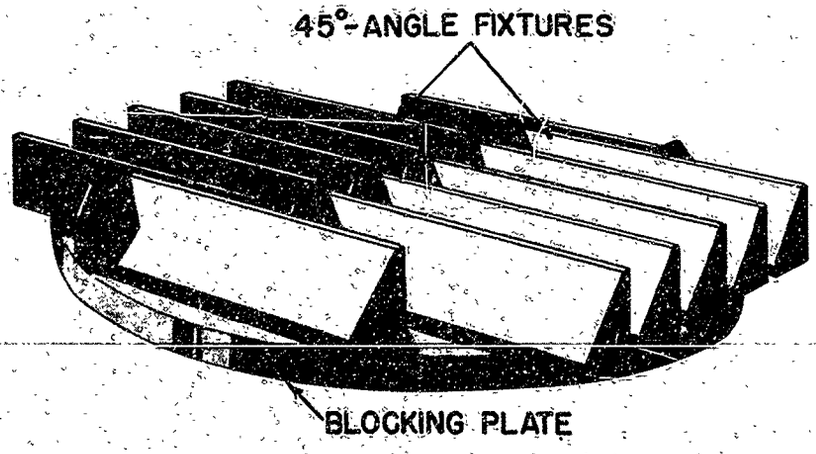

(b) Fixtures Mounted on Blocking Plate.

Minneapolis-Honeywell Regulator Company

Figure 1404.—45°-angle Fixtures.

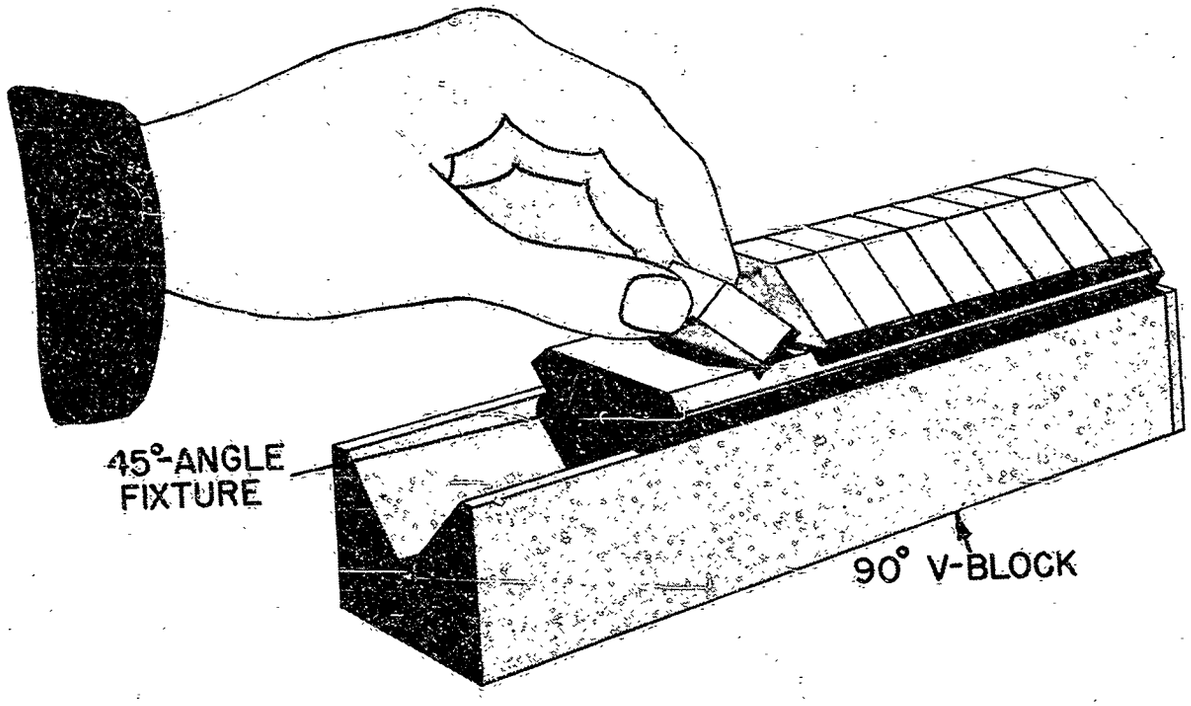

Minneapolis-Honeywell Regulator Company

Figure 1405.—Mounting Pressings on 45°-angle Fixture.

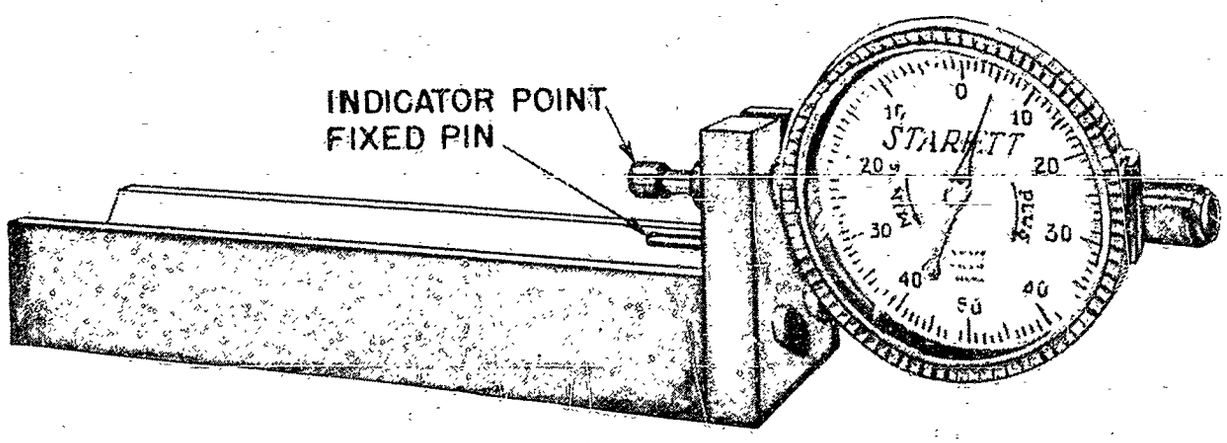

Minneapolis-Honeywell Regulator Company

Figure 1406.—Gaging Fixture for Establishing Parallelism of Pressings.

fixture is then bolted on its second side and the other end 45° face is ground. The rough grinding procedure is as described in Chapter 5.

Hypotenuse. *Transferring to 90° V-blocks.*—This is done in a manner similar to that described in Chapter 6 for transferring glass plates. In this case, a 90° V-block (see Figure 1407) is warmed and given a coat of wax. Then the 45°-angle fixture is inverted and the pressings pressed into the V-block carefully and firmly, taking care that the pressings are seated in the 90° V-block squarely and evenly, with the permanent end plate of the 45°-angle fixture at the open end of the 90° V-block. Then the combination is placed in a tray or bath of water as shown in Figure 1408, taking care that no water touches the pressings, and the 45°-angle fixture is heated with a bunsen burner. When it has been heated sufficiently to soften the wax, the 45°-angle fixture is slid sideways off the pressings slowly, carefully, and as straight as possible, so that the pressings will not be twisted or turned in their mounting on the 90° V-block, and taking care that the pressings are 'pushed' by the permanent end plate of the 45° fixture against the permanent end plate of the 90° V-block.

Mounting the 90° V-blocks.—A group of 90° V-blocks with the pressings mounted on them are bolted to a flat blocking plate in a symmetrical arrangement, taking the same precautions as to cleanliness of surfaces as were followed when the 45°-angle fixtures were mounted on a blocking plate for grinding.

Rough Grinding.—The hypotenuse of the pressing is rough ground (as in Chapter 5) until the length of the pressing is correct for making two prisms, with the proper allowance for the diagonal saw cut that is made later. A method for calculating this allowance is illustrated in Figure 405.

Fine Grinding and Polishing.—The procedure for these operations is described in Chapter 11, *Fine Grinding and Polishing Flatwork.*

Top.—The pressings are transferred from the 90° V-block to a blocking plate, using again the technique described in Chapter 9 under

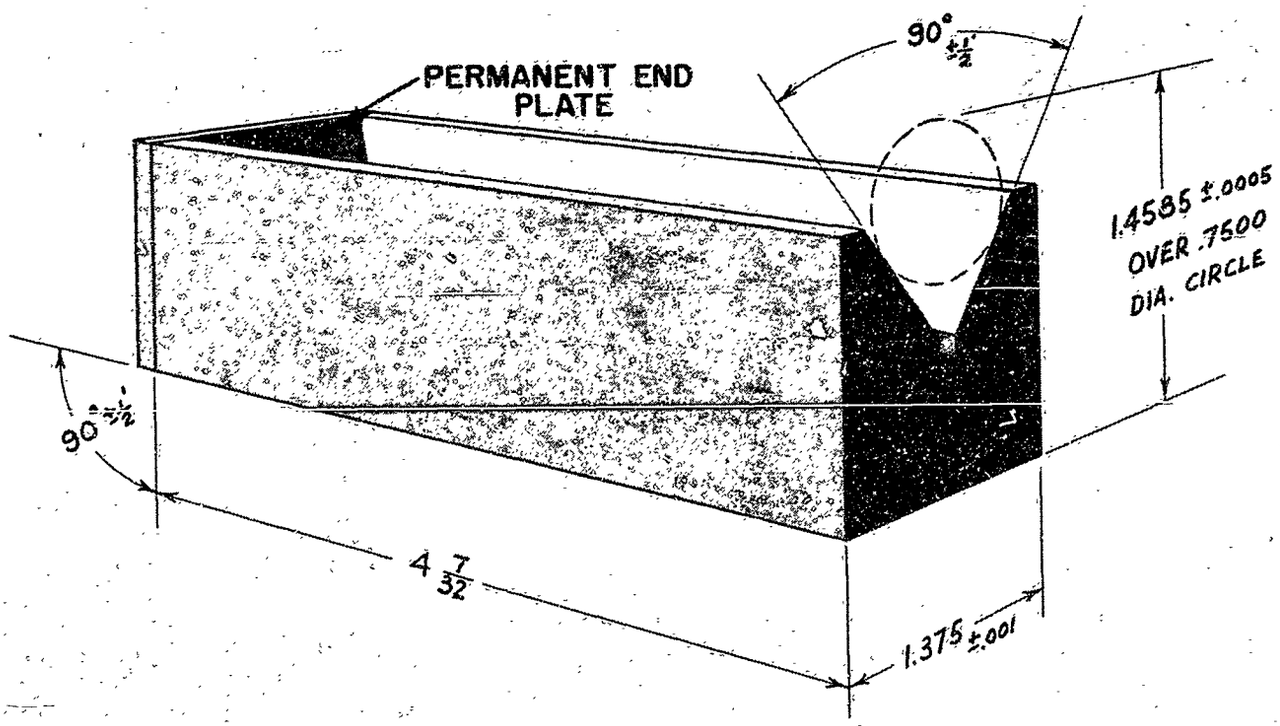

Minneapolis–Honeywell Regulator Company

Figure 1407.—90° V-block for Exposing Hypotenuse Faces.

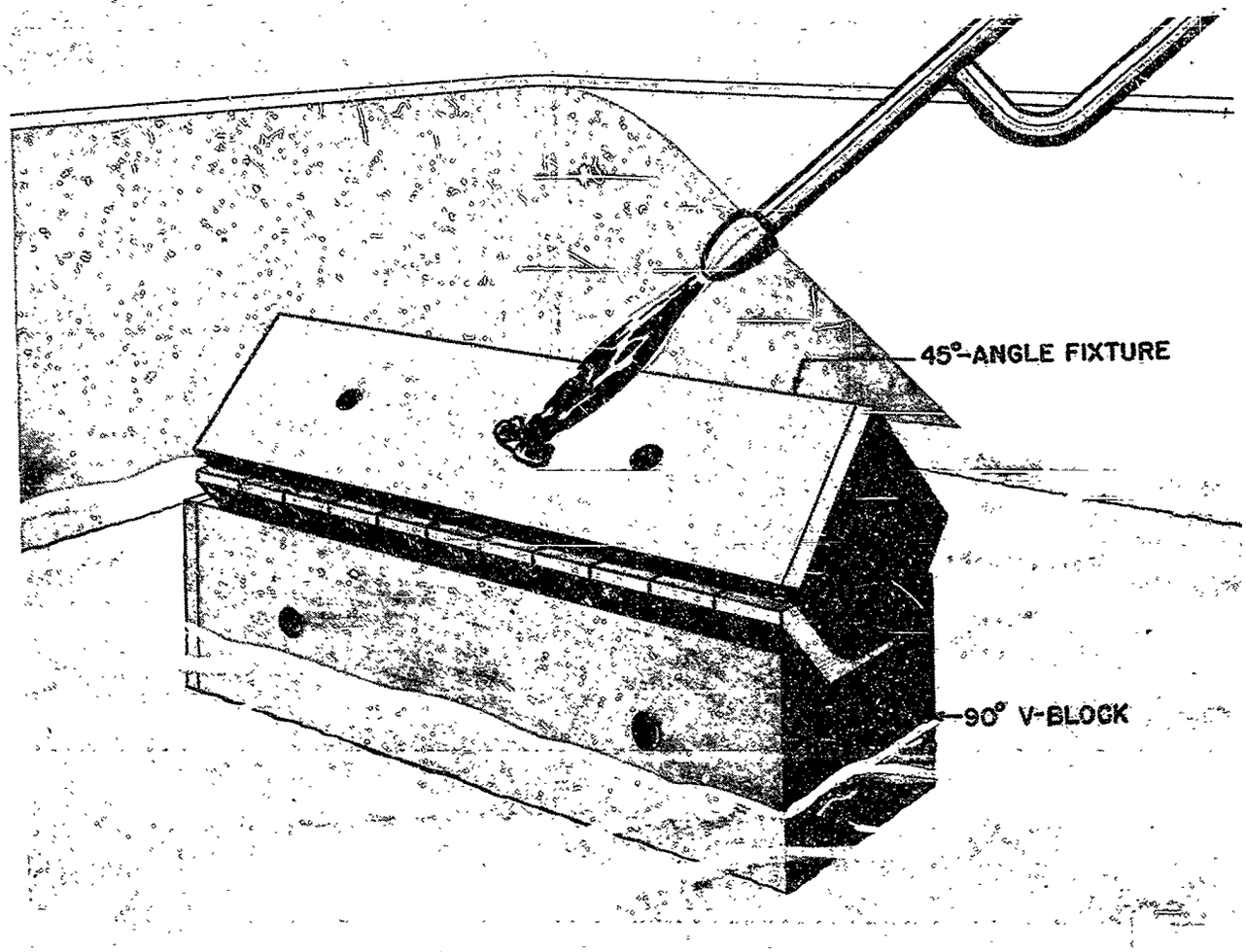

Minneapolis-Honeywell Regulator Company

Figure 1408.—Transferring from 45°-angle Fixture to 90° V-block.

"Transferring Glass Plates." Because a polished surface is being placed in contact with the blocking plate, it is customary to include a sheet of paper in the layer of wax that is applied to the blocking plate which is to receive the pressings. Also, it is necessary to use care in sliding the 90° V-block off the stacks of pressings (see Figure 1409) so that they will not be twisted out of alignment. When the pressings have been mounted, the top is rough ground, using the procedures described in Chapter 5.

First Side (Fine Grind and Polish). *Correcting One Side.*—One side is corrected by hand until it makes a 90° angle with the hypotenuse. The angle that each side makes with the hypotenuse should be checked and the larger of the two corrected. The accuracy of these two 90° angles depends largely on the care that was used in mounting the pressings on the 45°-angle fixture described previously, and hence the importance of using great care in this earlier operation cannot be over-emphasized. After one of the two angles has been corrected within a tolerance of ± 1 minute of arc, the side adjacent to this angle is marked for use in the next blocking operation.

Mounting.—The pressings are mounted on a blocking plate, with the corrected side, as marked, against the plate, and arranged in concentric circles on the plate (Figure 1402), with the hypotenuse and top alternately tangent to the circles. This method both gives the required symmetry of arrangement and provides for placing the maximum number of pressings on the plate. The pressings are

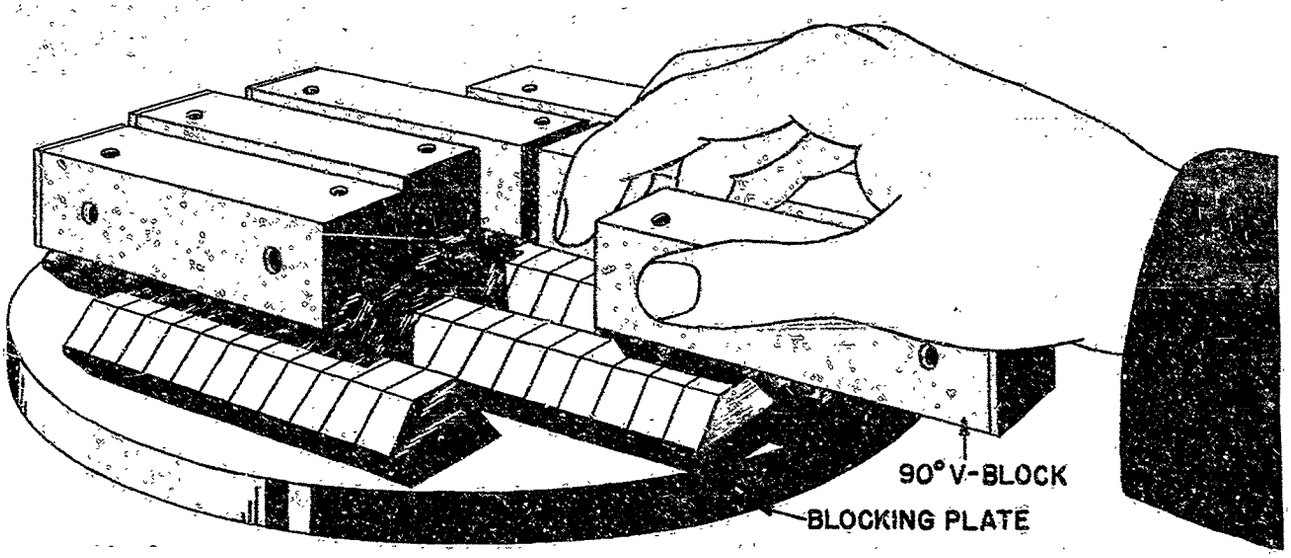

Minneapolis-Honeywell Regulator Company

Figure 1409.—Transferring from 90° V-blocks to a Blocking Plate.

mounted on the blocking plate as described in chapter 9, *Blocking Flatwork.*

Fine Grinding and Polishing.—In fine grinding and polishing the first side, it is necessary to take care that the final surface is parallel to the surface of the blocking plate. This assures that the two sides of the pressing will be parallel, and that each will make a 90° angle with the hypotenuse within the error of the hand correction just made. The actual fine grinding, polishing, and gaging is done as described in Chapter 11, *Fine Grinding and Polishing Flatwork.* A special gage, using a dial indicator, that will measure the 90° angle, is discussed in Chapter 24 under *"Fixtures Including Dial Gages."*

Second Side (Fine Grind and Polish).—Next, the blanks are transferred to another blocking plate, again using the methods described in Chapter 9 under *"Transferring Glass Plates,"* and the second side is fine ground and polished.

PRISM SURFACES

Diagonal 45° Face and Side. *Sawing Pressings into Prism Blanks.*—The pressing is cut diagonally into two prism blanks on a commercial glass-sawing machine, using an abrasive cutting wheel as described in Chapter 3, *Glass Cutting.* The diagonal dash lines across the top of the pressing shown in Figure 1401 indicate where it is cut into two prism blanks. This cut can be made in either of two directions and thus make either 'right-hand' prisms, as shown in Figure 1401, or 'left-hand' prisms, as shown in Figure 105. A 'porro prism system' (see Figure 106) can be made from two left-hand abbe prisms or from two right-hand prisms, but cannot be made from one of each. The pressing is held in a fixture (see Figure 1410), positioned so that the cut is made along the proper line to form two prism blanks of the correct size. It is not necessary to wax the pressing to the fixture when making this cut. To reduce the tendency of the saw to chip the edges of the glass, the polished faces are shellacked and the edges are beveled before starting the sawing operation. As explained in Chapter 3, a cut is made less than the thickness of the prism, and the final break is made by hand, as a precaution to reduce chipping. However, in the case of this small prism the cut is made to 0.030 inch less than the thickness of the pressing, instead of the ⅛ inch less as described in Chapter 3.

Mounting in Pin Fixture.—The prism blanks are mounted on a pin fixture for fine grinding and polishing the cut prism face. The purpose of this pin fixture (see Figure 1411) is to provide a convenient method for holding

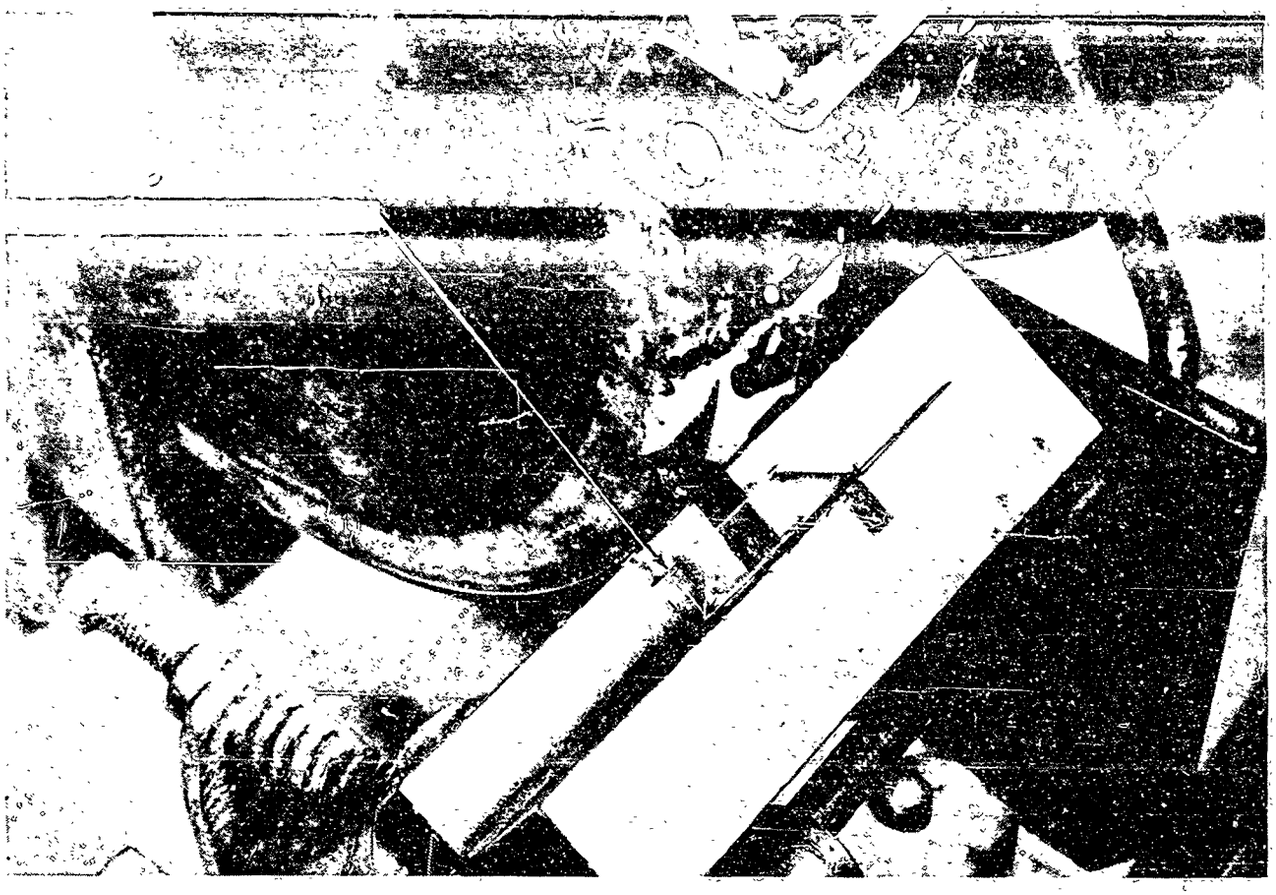

Minneapolis-Honeywell Regulator Company

Figure 1410.—Sawing a Pressing into Prism Blanks.

a group of prism blanks for grinding and polishing either end 45° face and for bringing the blanks to correct overall length. The pins are used for positioning or 'landing' the prism blanks in the desired position, and not for holding the blanks on the fixture; the latter is done with wax in the conventional manner. To insure that the blanks are landed tightly against the pins, the pin fixture while still warm and before the wax on it has hardened, is placed in a locating fixture (see Figure 1412). This locating fixture uses spring-actuated plungers to force the prism blanks against the pins with a pressure of about two pounds on each. The pin fixture itself is similar to the 45°-angle fixture used for rough grinding the pressings and is made with the same accuracy and tolerances and is used in the same way, *i.e.*, by bolting it to a blocking plate. (See Figure 1413.) A special gage, using a dial indicator, that will measure the length is described in Chapter 24 under "Fixtures for Mounting Dial Gages."

Rough Grinding Side.—Prior to sawing the pressing, both sides were polished. These two polished sides produced, through the sawing operation, a polished side face and a polished triangular side on each of the mating prisms blanks which constituted the pressing. The polishing of the triangular side hence was a manufacturing convenience, but this side should not remain polished. It is now, therefore, ground by hand on a finishing mill.

Fine Grinding and Polishing Diagonal 45° Face.—The diagonal 45° face is ground lightly by hand on a standard mill to remove any burrs. Then the loaded pin fixture is bolted to a blocking plate, as shown in Figure 1413, and the diagonal 45° face is fine ground and polished as described in Chapter 11.

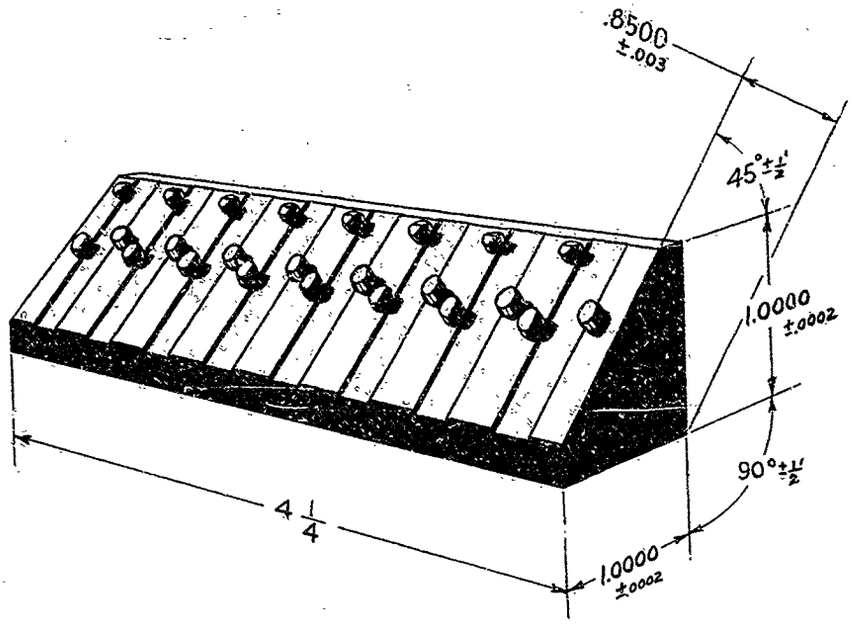

(a) Pin Fixture

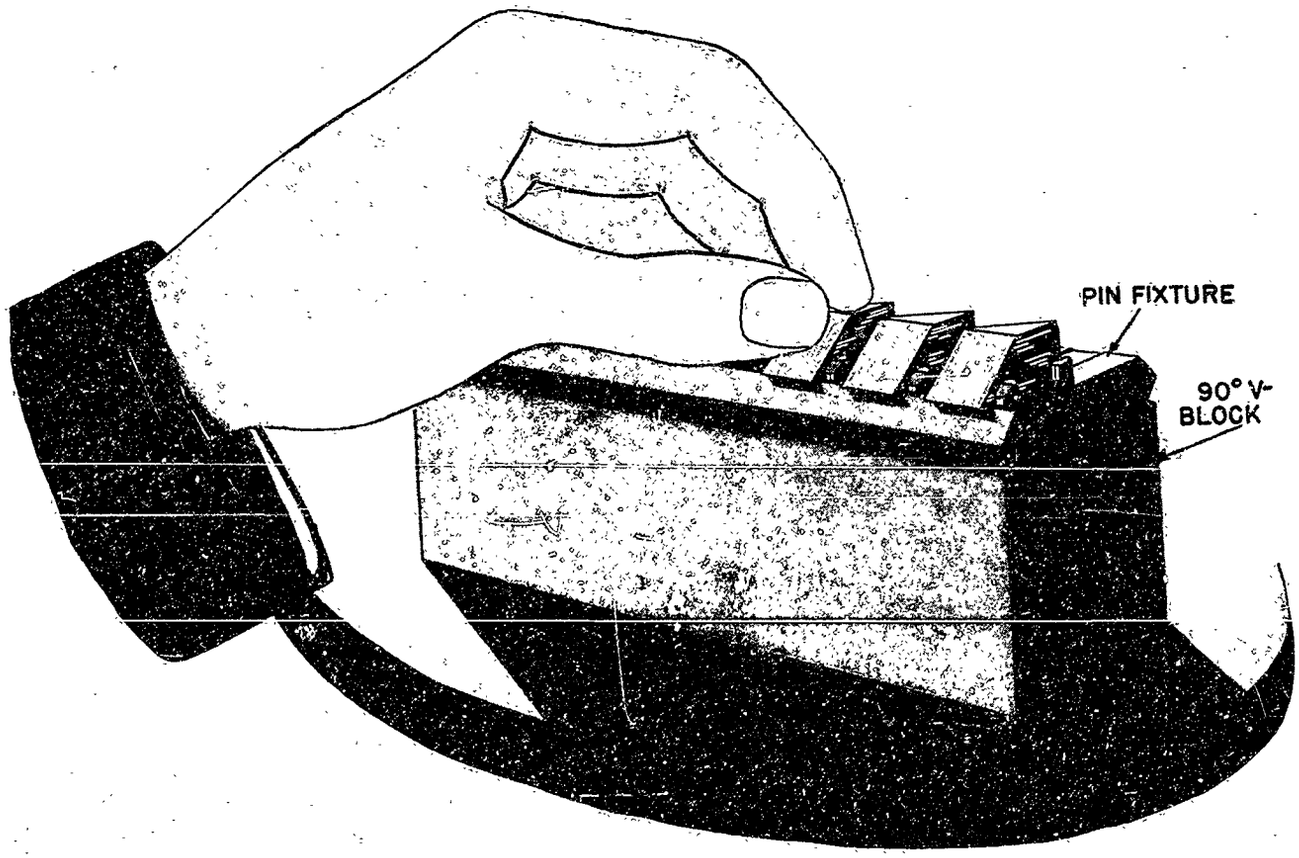

(b) Positioning Prism Blanks by Hand

Minneapolis–Honeywell Regulator Company

Figure 1411.—Pin Fixtures Used While Fine Grinding and Polishing Diagonal and End 45° Faces.

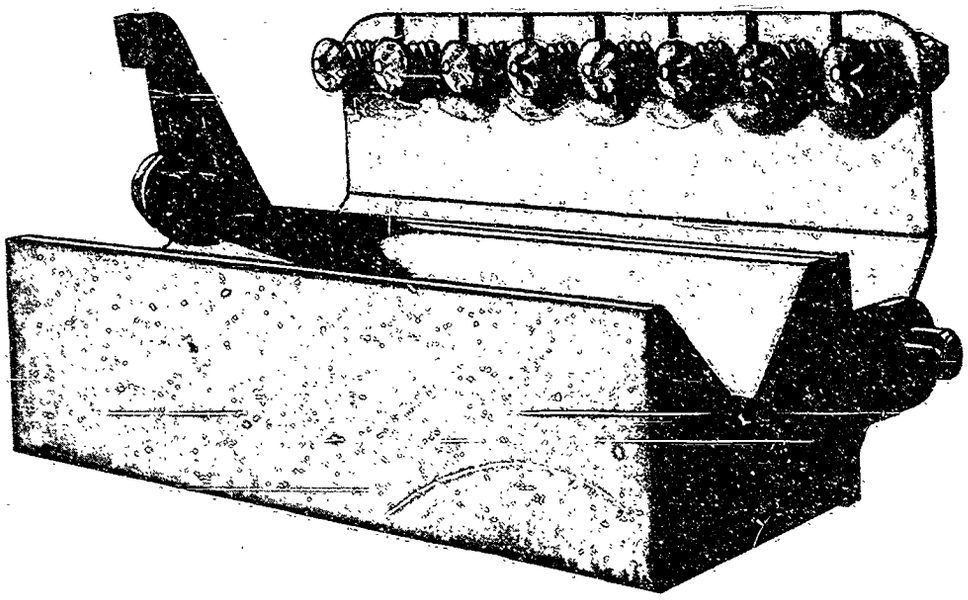

(a) Spring-loaded Locating Fixture

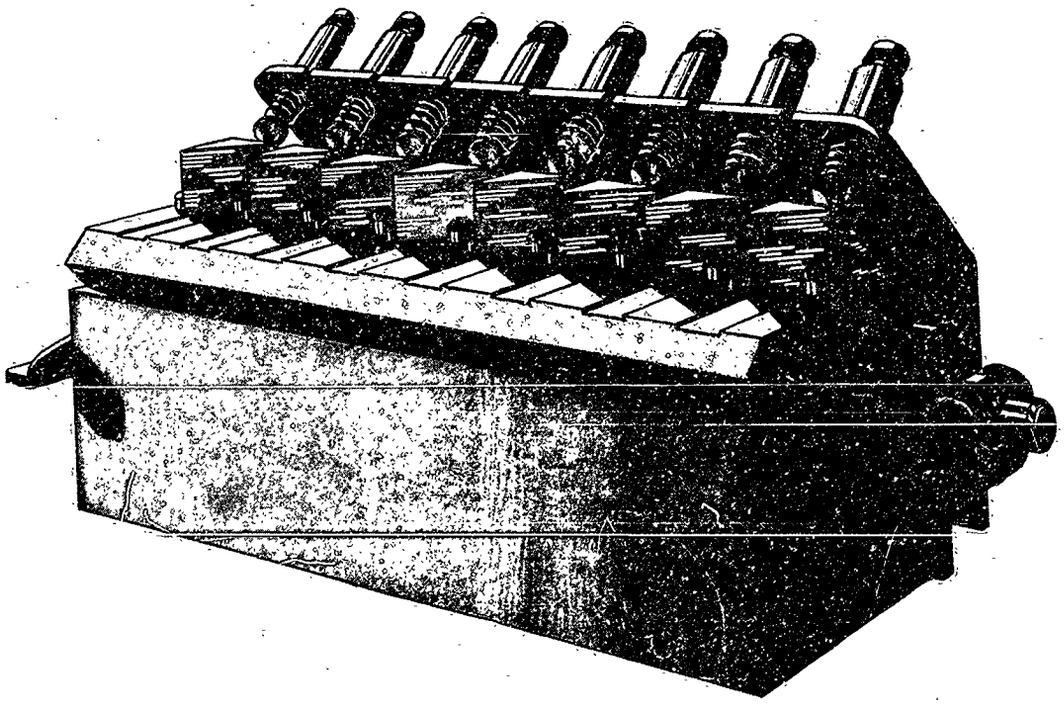

(b) Prism Blanks Held in Position on a Pin Fixture by Uniform Spring Pressure

Minneapolis–Honeywell Regulator Company

Figure 1412.—Locating Fixture.

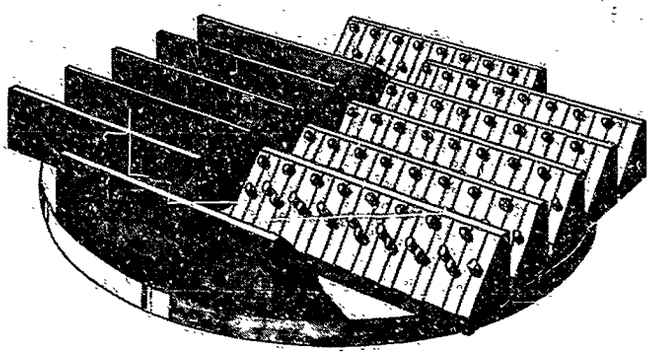

Minneapolis-Honeywell Regulator Company

Figure 1413.—Pin Fixture Mounted on a Blocking Plate.

End 45° Face (Fine Grind and Polish).—When the diagonal 45° face has been fine ground and polished, the blanks are removed from the pin fixture, reversed, and remounted on a clean pin fixture.

This permits the end 45° faces to be fine ground and polished, which is also done as described in Chapter 11. After the polishing has been completed, all of the edges and corners of each prism are beveled in the usual manner. A special gage, using a dial indicator, that will measure the 45° angle is described in Chapter 24 under "Fixtures Including Dial Gages."

CHAPTER 15

CORRECTING ROOF-ANGLE PRISMS

	Page No.
Hand Corrections.	1502
Rough Hand-grinding Correction (60° Angles).	1506
Roof Faces.	1506
Both 90° Faces and First Roof Face (Fine Grind and Polish).	1507
Fine Hand-grinding Correction (90° Roof Angle—First Correction).	1507
Second Roof Face.	1507
Fine Grind and Polish.	1508
Hand-polishing Correction (90° Roof Angle—Final Correction).	1508
Inspecting.	1508
Adjusting the Telescope to the Target.	1510
Interpreting the Target.	1510
Preparing the Polishing Tool.	1512
Least Flat Roof Face.	1512
Optical Contact Corrections.	1517
Bausch & Lomb Optical Company.	1517
Blocking.	1517
Grinding and Polishing.	1519
Naval Gun Factory.	1520
The Perkin-Elmer Corporation.	1524
First Roof Face.	1524
Second Roof Face.	1526
Preparing the Fence.	1526
Blocking.	1528
Grinding.	1529
Checking, Fine Grinding, and Polishing.	1529
Mechanical Corrections.	1530
C. P. Goerz American Optical Company.	1530

As the conventional operations of grinding and polishing a roof-angle prism normally will not produce the required flatness of the various faces combined with the proper accuracy of the angles between the faces, certain 'correcting' operations usually must be employed. This chapter describes the methods by which such corrections are made.

While this chapter is devoted largely to correcting processes as applied to an amici roof prism (see Figure 108), the methods described may also be applied to other types of roof prism, such as the leman prism (Figure 109), or the Brashear–Hastings prism (Figure 110).

The method of manufacturing roof-angle prisms at Frankford Arsenal involves three hand corrections during the processing from raw glass to finished prisms. These hand corrections are performed on the roof faces only.

The first hand correction is done on a round, metal, rotating tool about 8 inches in diameter and corrects the 60° angles which the roof faces make with the 90° faces. This step is a rough-grinding operation and is performed on both roof faces. When this step has been completed, the roof angle will be corrected to 90° ± 30 to 60 seconds.

The second hand correction is a fine-grinding operation performed on the second rough-ground roof face after the two 90° faces and the first roof face have been fine ground and polished, and corrects the roof angle to 90° ± 15 to 30 seconds. This second hand correction is done on a stationary, rectangular, metal tool with a toric surface that is slightly convex (see Figure 1504).

The third hand correction is necessary because there is some unavoidable displacement of the 90° roof angle during the blocking, fine grinding, and polishing of the second roof face after the second hand correction. The third hand correction, which is a hand-polishing correction, is performed on the least flat of the two fine-ground and polished roof faces, and is done on a pitch polishing tool. This step is intended to obtain both a flat surface of the roof face involved, and to result in a final accuracy of 90° ± 2 seconds in the roof angle.

Other methods of manufacturing roof prisms differ only in the manner of processing the roof angle. One of these is the 'optical contact' method, which requires extremely accurate plano-parallel plates for blocking the prism. Although this method eliminates hand correction of the roof angle, it is necessary to hand correct the four 60° angles. A mechanical method for correcting the roof angle is described in the last part of this chapter. Although the actual polishing correction operation is not eliminated in the mechanical method, it is performed on a machine with a special fixture (gimbals blocking fixture) which simulates the motion of hand polishing.

HAND CORRECTIONS

When the fundamentals of hand-grinding correction are applied carefully, the operations are performed with relative ease. Although the following principles are stated simply and without emphasis, *their importance must not be underestimated.*

The principles of hand-grinding correction concern only two things, *i.e.*, the accuracy of the faces corrected and the accuracy of the angles corrected. Two of the several factors necessary to the attainment of accurate faces and angles are, first, that the grinding tools used have correct surfaces and, second, that angles are gaged properly. *i.e.*, with the correct angle gages and by correct use of these gages.

It is of primary importance that the contour of the two grinding tools used for the first and second hand-grinding corrections be correct.

The contour of the rotating, metal tool used in the first hand-grinding correction should be slightly convex. The tool is gaged for evenness of convex curvature by 'rocking' a straightedge centrally across its surface from edge to edge. If the curvature is even, the amount of darkened area contacted will be the same at all places on the surface. Conversely, the curvature observed at each end of the darkened area will be similar. If the curvature is found to be uneven, any necessary corrections may be made by holding a carborundum stone on the surface while the tool is rotated.

The contour of the stationary, rectangular, metal tool with the toric surface—the tool used in the second hand-grinding correction—should

also be slightly convex. To check evenness of curvature in this tool it is necessary to grind a prism blank with it and then check the resulting face.

When making the first hand-grinding correction on the rotating tool, it is advisable to use one of the finer abrasives (FFF or #303), because these will remove the glass more slowly and enable the operator to control the correction more accurately. When making the second hand correction on the tool with the toric surface, #1600 abrasive should be used. This abrasive is used because it enables a test to be made on the second face with an optical flat. Such a test is necessary to assure a second roof face that is from 6 bands concave to plane before subsequent blocking, fine grinding, and polishing.

The reason why the tools should be slightly convex is that the faces of blanks, when ground, should range from 6 bands concave to plane. Experience has shown that this variation is permissible in the faces without causing any detrimental effect upon the blocking, fine grinding, and polishing operations which follow both the first and second hand-grinding corrections. Absolutely no convexity is permissible in the hand-ground faces. In fact, any convexity of either sides or faces prevents a correct reading when checking an angle with an angle gage. If the reference side is convex, the base of the gage will rock; if the face to be checked is convex, the bar or blade of the gage will contact only the highest part.

During the hand-correcting operations, the angles are checked with gages such as the special gages shown in Figure 1501. Although the accuracy obtained by a correction depends upon several factors, one of the most important is the precision of the gage itself. To test this, a light-tight reading is made against a 'master' prism, holding the gage as illustrated in Figure 1502. The accuracy of the test is also affected by the 'feel' that the operator obtains when the bar or blade of the gage is brought into contact with the blank. To obtain the proper feel, the bar or blade, the base of the gage, and also the surfaces of the blank must be clean.

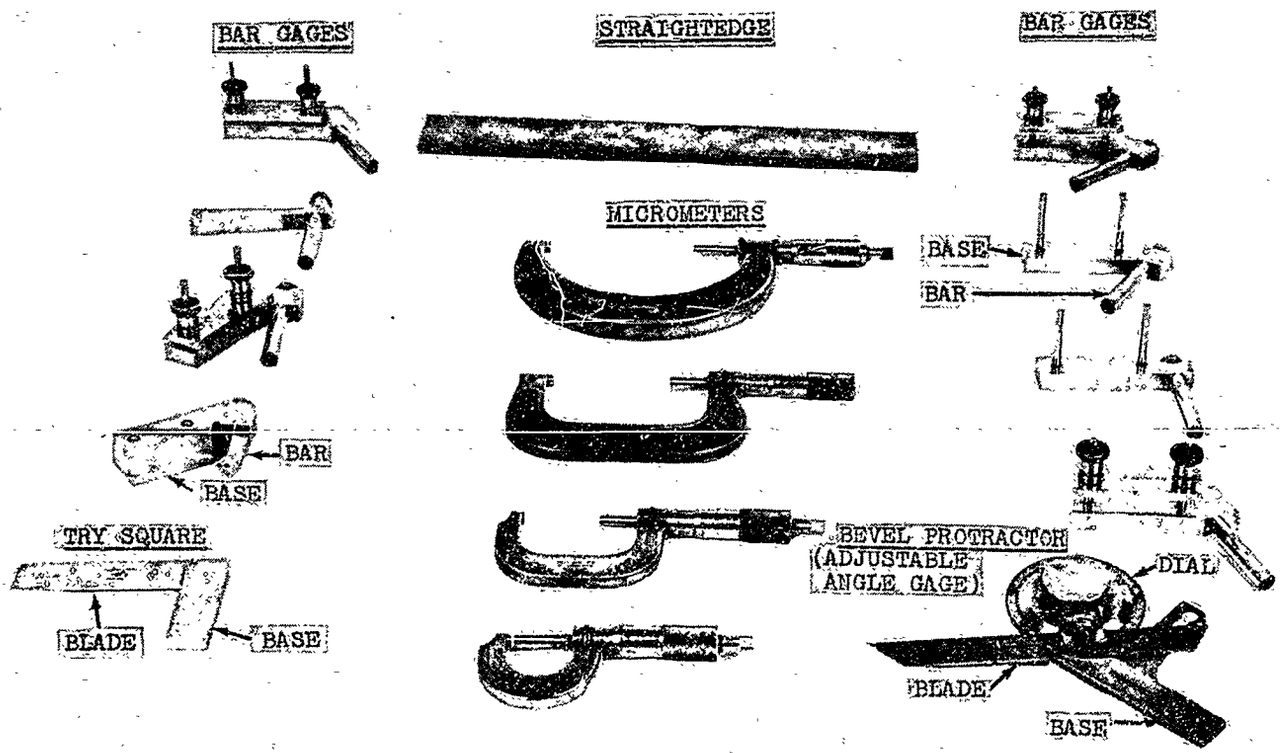

Figure 1501.—Gages for Checking Prism Blanks.

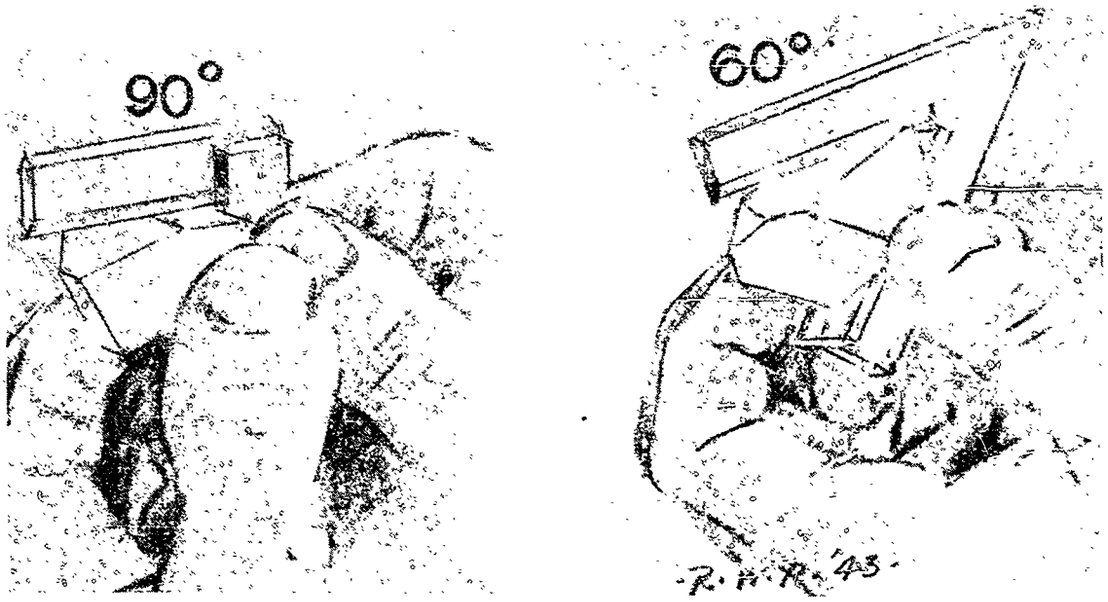

Drawing by Russell W. Porter

Figure 1502.—Method of Holding Gage for Checking a Prism Angle.

To make a test, the base of the gage is held with a light, firm pressure against the proper reference surface of the blank and slid down the reference surface until the gage bar or blade comes into contact with the face to be checked. The edge of the gage base is kept parallel to the edge of the blank at all times during this checking operation.

Angles, when gaged, are generally classified as follows:

If more than the gage: *positive*, or *plus*.

If less than the gage, *negative*, or *minus*.

If the correct angle, *up to gage*.

If the angle is negative, the surface is ground at the edge nearest the junction of the gage base and the bar (or blade), whereas, if the angle is positive, grinding starts at the outer edge.

Each time a 60° angle is gaged it is marked according to a system of pencil lines, illustrated in Figure 1503, to guide the operator in making the necessary corrections. The face to be ground is indicated by a cross (×) placed on an adjacent side.

A short line at either end of the surface to be ground indicates the more negative end, Figure 1503 (c), (d), (e), and (f). If two angles are positive to different degrees, cases (e) and (f), the less positive of the two is considered negative. During the actual hand grinding of the roof face, the prism is always drawn toward the operator with the more negative end nearest to him. A study of Figure 1503 will show that the pencil marks on the face to be ground are placed where extra abrasion is required.

The manner in which the prism blank is held is another extremely important factor in making accurate hand corrections. This is true of all three hand corrections—first and second hand-grinding corrections and the hand-polishing correction described later in the chapter. Figure 1512 illustrates the finger positions which should be employed at all times. The thumb and either the fore or middle finger of the right hand are placed about halfway over the 90° faces of the prism blank, while the same fingers of the left hand are placed on the angle edges between the roof and the 90° faces. Thus the thumb and a finger of each hand form a cradle about the blank and must move as a unit at all times.

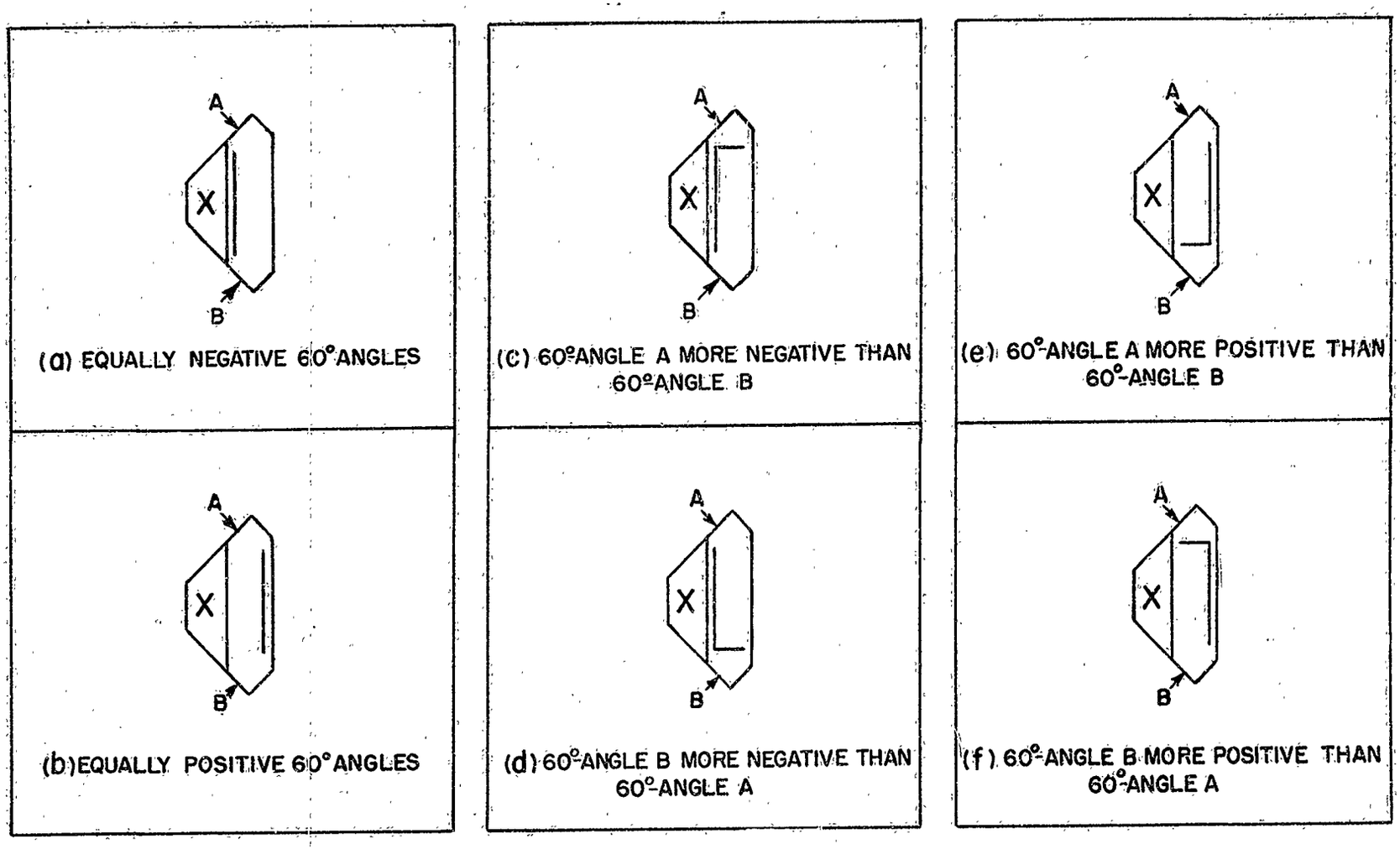

Figure 1503.—System of Marking Amici Prism Blanks with Various 60°-angle Errors.

Rough Hand-grinding Correction (60° Angles)

Roof Faces. — The first hand correction, which is a rough hand-grinding operation, is made on both roof faces after the blank is formed by rough grinding (see Chapter 4 under "Amici Roof Prism—Correcting the Angles") and consists of correcting the four 60° angles. Both 60 and 90° gages are used and the operation is performed on a rotating, metal tool—approximately 8 inches in diameter—using either FFF or #303 abrasive.

In gaging a roof face, two readings are taken, one from each 90° face to the same roof face, Figure 1502(b). It does not matter whether the gage base is placed on the 90° face or the roof face, but close attention is necessary when gaging. Errors must be identified correctly as to type, or much trouble may ensue during correction. The five possible types of error are listed below in the order of decreasing frequency:

Case 1. 60° angles at both ends of the roof face equally negative

Case 2. 60° angles at both ends equally positive

Case 3. 60° angle at one end more negative than angle at the other end

Case 4. 60° angle at one end more positive than angle at the other end

Case 5. A 'twisted' roof edge

Markings to identify various errors in the 60° angles, as they occur in cases 1 through 4 above, are illustrated in Figure 1503. Case 5 represents a combination of errors and occurs when the angle that the roof face makes with the 90° faces reads positive when measured from one 90° face, and negative when measured from the other 90° face, or vice versa. A 90° gage applied to the roof angle can also be used to determine a twisted roof edge. When using a 90° gage, the roof angle will be negative at one end of the roof face and positive at the other end. (See Figure 430.)

During the grinding necessary for this correction, the blank is placed anywhere from the center to about 1½ inches off the center of the rotating tool. It is then worked toward the outer edge of the tool because the outer portion of the tool grinds faster, due to its greater speed as compared to the speed at the center. When it is desired to remove the blank from the grinding tool to gage the angle, it is 'surfaced' by rubbing it around the outer edge of the tool and then passing it over the center, in order to obtain a surface that will give a correct indication with the gage. Next, to prevent any beveling, the blank is removed from the tool with a quick upward lift of the wrists, and without any twisting. After this it is wiped clean and is ready for gaging. It is advisable to take only a few rubs between readings because the angle should be checked frequently in order to prevent overcorrection, *i.e.*, changing a negative angle into a positive one, or vice versa.

When grinding, if the 60° angle is negative, pressure is applied on the near end of the blank at the 135° edge of the roof face being ground. Conversely, if the angle is positive, pressure is applied on the opposite end at the roof edge. If the error is not uniform (see cases 3, 4, and 5, above), the first step is to convert it to an error (case 1 or 2), equal for both ends of the roof face, as a uniform error is easier to correct.

To illustrate the entire correcting method when starting with a non-uniform error, assume that one end is 8 minutes negative and the other end 4 minutes negative. By using the rotating tool and applying pressure at the proper locations as indicated above, the error may be modified so that both ends are 6 minutes negative. After making the error equal for the two ends of the blank, the blank is returned to the rotating tool and a slight amount of pressure is exerted on it by the index and middle fingers, in this case toward the lower 135° edge as the angle is negative. This operation is continued until the angle is corrected satisfactorily. During the correction of an angle, the type of error may change with each attempted correction. In each case, as the type of error changes, the appropriate pencil lines are made and the procedure modified accordingly. As the angle approaches the desired value, the final correction is completed by stopping rotation of the tool and working on it while it is stationary.

After all four 60° angles are corrected, the 90° angle formed by the two roof faces is correct—theoretically. But usually, due to inaccuracy of the 60° gage, the roof angle will have a slight error. Since the roof angle is more important than the other angles, it is necessary to make a light-tight correction on this angle, Figure 1502(a). (At this stage both roof faces are in a rough-ground condition. Due to this fact, accuracy of 90° ± 30 to 60 seconds in the roof angle is satisfactory, since the roughness of the faces prevents angle-gage readings of final accuracy.) Correction of the roof causes a slight error in one or more of the 60° angles. To prevent excessive error in any single angle, it is the practice to distribute this new error in as equal fractions as possible, to all four 60° angles. When all angles have been corrected, the edge formed by the two roof faces must be sharp and free of chips.

Both 90° Faces and First Roof Face (Fine Grind and Polish).—The 90° faces and one roof face are now fine ground and polished as described in Chapter 11, blocking in each case being done by the 'cold method' (see Chapter 9). The blanks are then ready for the second hand correction which is applied to the still rough-ground second roof face.

Fine Hand-grinding Correction (90° Roof Angle—First Correction)

The second hand correction, which is a fine hand-grinding operation, is performed on the second roof face and has two objectives: first, to establish a roof angle that, when tested with a 90° precision angle gage on the fine-ground roof face, gives a light-tight reading that should not deviate more than ± 15 to 30 seconds; and, second, to reduce the roof face to a flat with a maximum variation of 6 bands concave to plane.

In order to accomplish these objectives, a reading is first taken with a 90° precision angle gage. The method of using this gage is similar to that already described, but an additional precaution is necessary because the blade of the gage is placed in contact with the polished first roof face. The following procedure should be complied with.

The base of the gage is placed on the unpolished roof face and slid down the surface until the blade makes a light contact with the polished face. The polished face will be scratched if the blade of the gage is moved sideways after contact has been made. Accordingly, a reading should be taken in this position and then the gage should be removed by first lifting the blade upward without sidewise motion.

In the subsequent fine grinding, #1600 abrasive is used on a stationary, rectangular, metal tool. Use of this abrasive permits the resultant surface to be tested with an optical flat. The grinding tool has a convex toric surface with major and minor radii of 450 and 250 inches respectively. Consequently, this tool produces a complementary concave toric surface on the blank.

Second Roof Face.—After the roof angle has been tested with the angle gage, the abrasive mixture is spread on the tool and the blank is placed on the lower left corner of the tool and rubbed back and forth over the entire length of the tool, taking care that the blank is held properly and that proper pressure is exerted. (See Figure 1504.) After the blank has been rubbed a few times, it is cleaned and dried and the angle is checked with the angle gage. Next the surface is tested with an optical flat (for a discussion on the use of an optical flat see Chapter 22) and should not be more than 6 bands concave (see Figure 1505). The fine-grinding operation should be repeated until both the desired flatness of surface and accuracy of the roof angle are obtained. If the face deviates from this standard, the blocking operation which follows will be inaccurate and usually will cause a displacement of the roof angle. A check of the ground face of the blank furnishes a check on the contour of the grinding tool. If the ground face deviates from the prescribed slight concavity, the grinding tool should be corrected.

In the correction of a roof angle, it is comparatively easy for a skilled operator to obtain either an accurate angle or a good surface. The difficulty is to obtain accuracy of both surface and angle simultaneously.

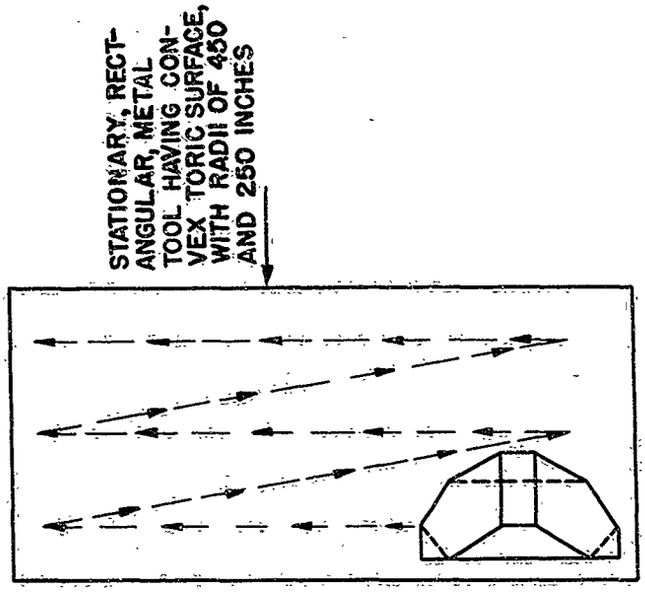

Figure 1504.—Path Followed when Fine Grinding Second Roof Face of an Amici Prism Blank by Hand.

Fine Grind and Polish.—After the blank has been corrected, it is ready for fine grinding and polishing of the second roof face.

A polished first roof face of each of two blanks is cleaned with alcohol and dusted with a camel's-hair brush. Then the two fine-ground second roof faces are placed on an optical flat, and the two polished faces are brought together very slowly. When contact is made, the faces are pressed together firmly, taking care not to move the prisms from their position on the flat. If the color bands visible between the first roof faces are wide, the contact between these faces is good, but if the bands are narrow and close together, the blanks must be taken apart, cleaned, dusted, and the operation repeated until good optical contact is obtained.

A blocking plate is placed on an electric heating plate, and a thin layer of 'ceresin' wax is melted over the surface of the plate. Then each pair of contacted prisms is placed on the blocking plate and seated firmly, taking care that they are arranged symmetrically (see Figure 902). All exposed surfaces are painted with a protective coat (Figure 901). The blanks are plaster blocked as described in Chapter 9, and then the second roof faces are fine ground and polished as described in Chapter 11. When the prisms are removed from the block and cleaned, they are ready for the third hand correction which is a hand-polishing correction.

Hand-polishing Correction
(90° Roof Angle—Final Correction)

Inspecting.—The prisms are given a performance test by using them with a 25-power transit telescope (Figure 1506), to view a target placed 35 feet away and set at right angles to the telescope (Figure 1507). As an aid in determining the angle error, ¼-inch circles spaced 1½ inches apart may be placed on the diagonal lines of the target (Figure 1508). The diameter of a ¼-inch circle, at a distance of 35 feet from the target, subtends an angle

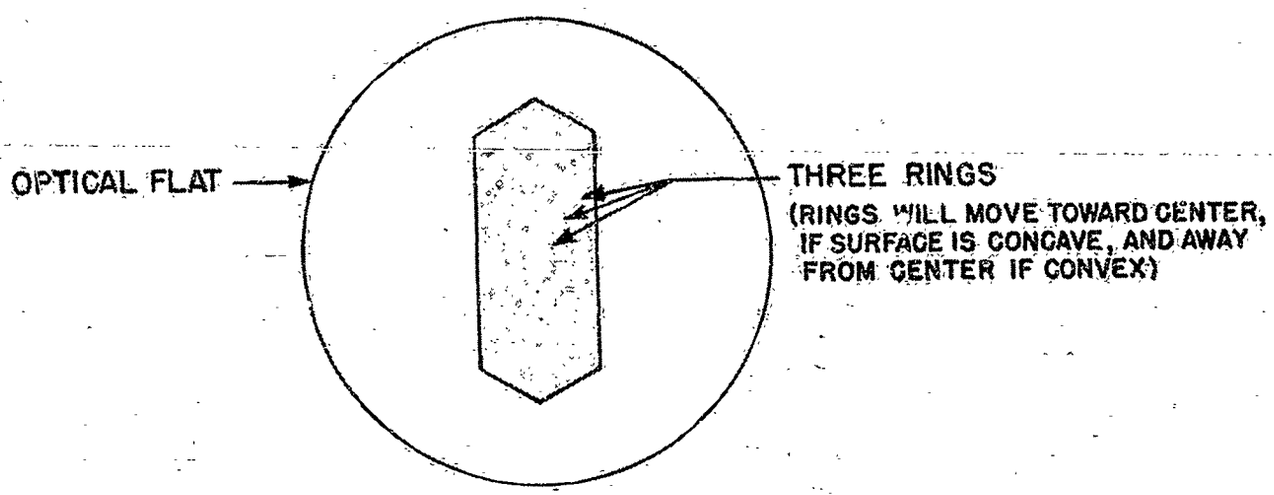

Figure 1505.—Roof Face Being Tested and Showing Three Rings.

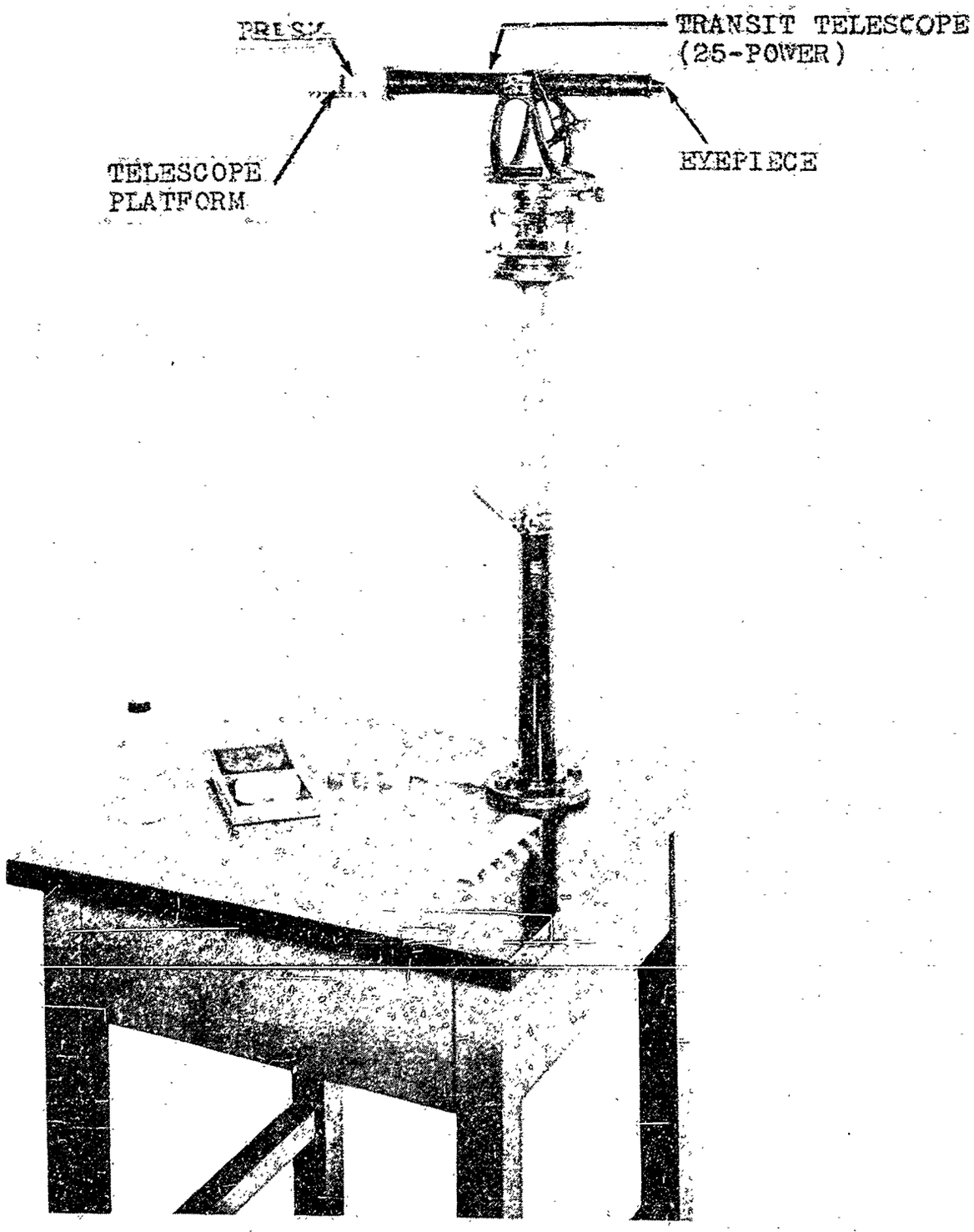

Figure 1506.—Transit Telescope (25-power) for Final Inspection of Roof-angle Prisms.

of 2 minutes. If the distance between the target and telescope is other than 35 feet, the size of the ¼-inch circles of the target must be changed to a size computed in accordance with the following formula:

$$d = 0.00059 \times s \text{ inches} \qquad (11)$$

where d = diameter of the circles, in inches

s = distance from telescope to target, in inches

This formula is derived from the relationship:

$$\frac{d}{s} = \tan 2' = 0.00059$$

By proper sustitution, the requisite size circle can be determined for any target distance. The National Bureau of Standards has designed a chart for lens resolution (see Figure 1509) which may be used in conjunction with the target mentioned above. The chart consists of accurately ruled horizontal and vertical lines of various widths, the finest lines being spaced fifty-six per inch. Since this finest spacing is close to the theoretical resolving power of the smallest amici prism manufactured for military use, this chart is of material assistance in determining the resolving power of the prism (see Chapter 24).

Adjusting the Telescope to the Target.—The telescope is swung in direct line with the target and the eyepiece is focused sharply on both the crosshairs (reticle) and on the target. Then the telescope is turned back to its inspection position at right angles to the target. The prism to be inspected is placed on the telescope platform and turned until the target is brought into the field of view.

Interpreting the Target.—With the eyepiece reticle in focus, a prism with the correct roof angle will produce a single image of the target. However, if there is an error in the roof angle, the horizontal and the diagonal lines, as well as the circles, will appear doubled. If the error is 2 minutes, the doubled images of the ¼-inch circles will be tangent to each other (see Figure 1510). If the error is 1 minute, the circles will overlap each other to one half of their diameter, *i.e.*, the circumference of one image will pass through the center of the other. For other errors, the circles of the two images will overlap more or less in proportion to the angle error. To determine whether the error is negative or positive, the eyepiece of the telescope is racked inward. If the doubled lines and circles

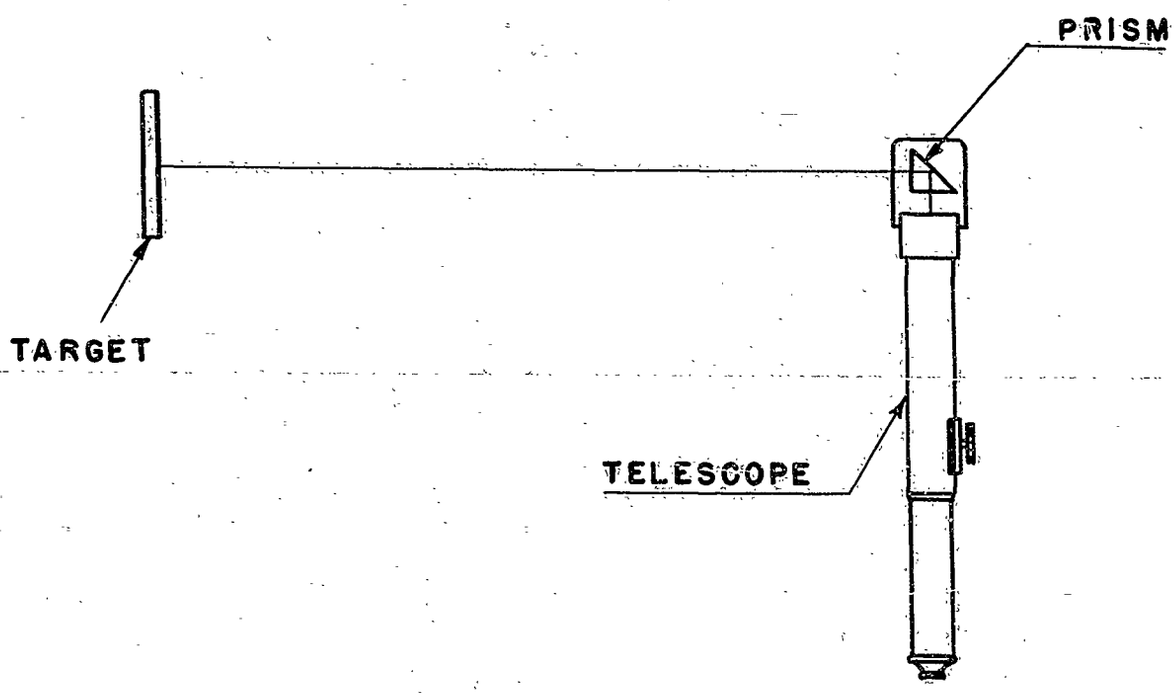

Figure 1507.—Plan View of 25-power Transit Telescope Prism, and Target for Final Inspection of Roof-angle Prisms.

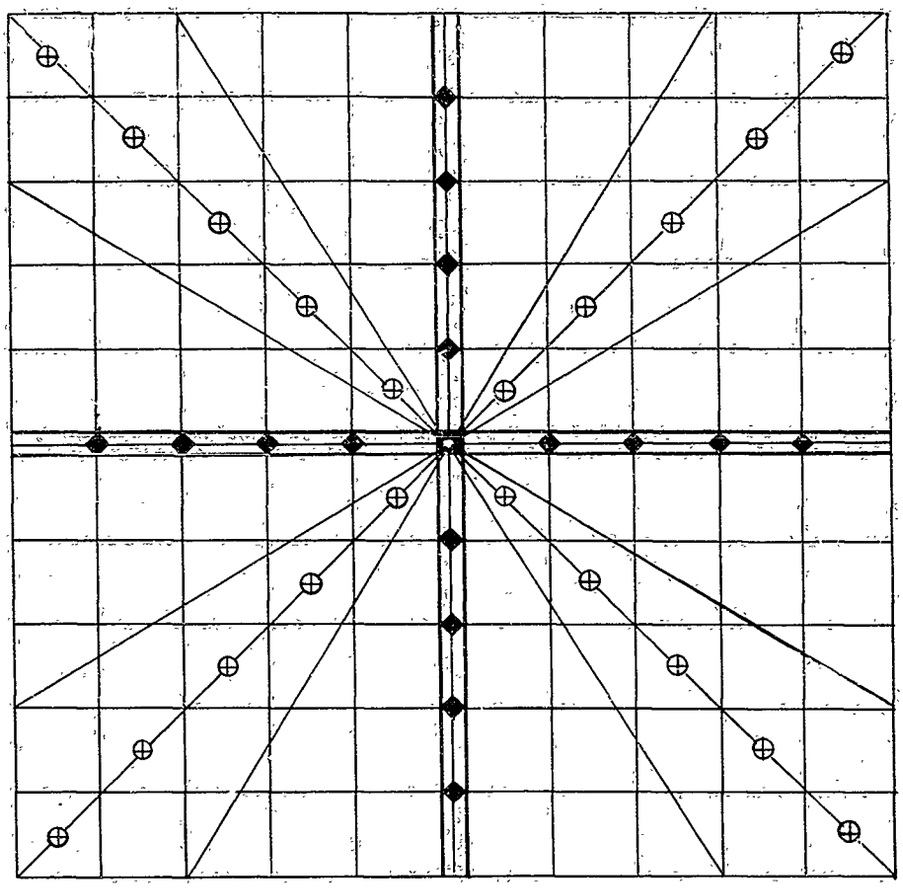

Figure 1508.—Target Used with 25-power Transit Telescope for Final Inspection of Roof-angle Prisms.

move toward their counterparts, the angle is less than 90° or negative. If the doubled lines and circles move further apart, the angle is more than 90° or positive. The reason for this phenomenon is, that if the angle is not exact, two converging images are produced by the prism, the convergence being back of the focal plane of the telescope when the error is positive, and in front of it when the error is negative.

When the two roof faces are polished to within ¼ wave length, the horizontal, vertical, and diagonal lines of the targets will be equally sharp, provided that the 90° faces are polished to within ½ wave length.

If the roof-angle error is over 2 minutes, either positive or negative, the second roof face must have another fine hand-grinding correction, together with the subsequent plaster blocking, and polishing described earlier. If, however, the roof angle is accurate within 2

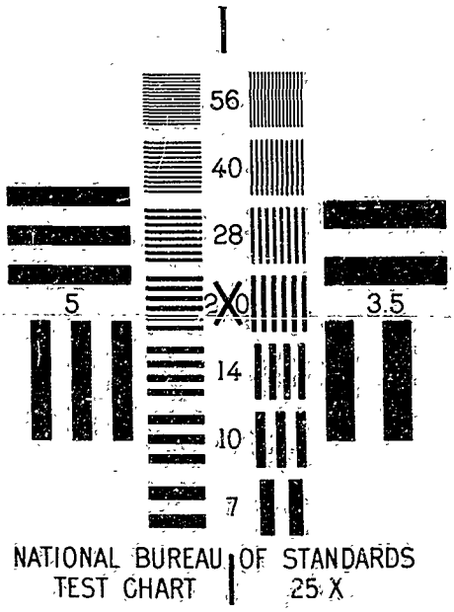

National Bureau of Standards

Figure 1509.—Chart for Testing Lens Resolution.

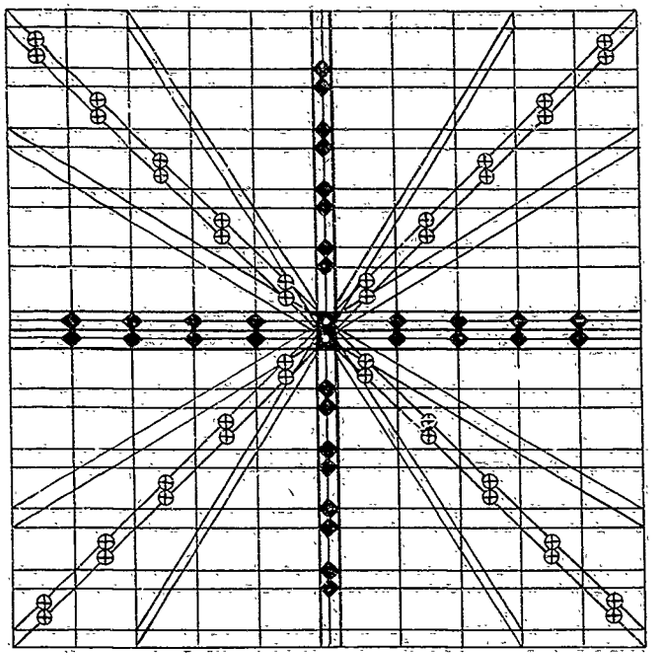

Figure 1510.—Appearance of Target as Seen Through an Amici Prism Having an Error of 2 Minutes in the Roof Angle.

minutes (but not within finished tolerances), the prism is ready for the final hand-polishing correction.

Preparing the Polishing Tool.—Due to the fact that the roof faces must have proper flatness so as to produce a sharp definition, the polishing tool must be prepared properly, for even with proper technique, the desired flatness cannot be achieved without the correct tool surface. Proper flatness of the tool surface is obtained by using the tool to polish a 'dummy' block which is mounted on a machine of the type illustrated in Figure 1511. This type of machine usually has a spindle speed of 12 to 15 rpm, and an oscillating-arm motion of about eight complete passes per minute across the vertical spindle.

In order to prepare the dummy block which is used to process the polishing tool, a 6-inch metal blocking plate is heated and an adhesive is melted over the surface, after which several circular glass plates are mounted on it. A plane surface is then ground on this dummy block with #1600 abrasive in a manner similar to that described in Chapter 11, *Fine Grinding and Polishing Flatwork.*

Next, a pitch polishing mixture of 'burgundy' and white rosin is poured on a 6-inch metal polishing plate in the same manner as described in Chapter 11. Although the exact proportions of the mixture depend on the technique of the individual operator, they may vary from a straight burgundy to three parts burgundy and one part rosin. The polishing tool is then placed on the spindle of the machine and is used to polish the dummy block. During the polishing of the block, a $\frac{1}{16}$-inch hole is made in the center of the tool and the surface is scratched, or waffled, in a crisscross manner as shown in Figure 1512. Additional scoring may be used on the tool to aid the processing of its surface, but the crisscross is the basic mark necessary to the subsequent hand-polishing correction of the prism.

Because the reading obtained from the dummy block surface is used as a means of gaging the polishing tool surface, the block is tested frequently with an optical flat. The same technique that is used to polish a block of concave lenses as described in Chapter 12 is used to polish the dummy block. When the dummy block is flat to a test glass, it is assumed that the polishing tool is flat also. Although a flat polishing tool is considered ideal, a slight convexity of the tool surface is permissible.

Least Flat Roof Face.—After the polishing tool has been prepared, both roof faces of a prism are color-tested and the least flat face is identified by a cross mark (×) on the adjacent side. The prism is then placed on the telescope platform and tested, to determine the amount of error in the 90° angle and whether positive or negative.

For the hand-polishing correction the polishing tool must be stationary. A small amount of rough mixture is applied to the prepared pol-

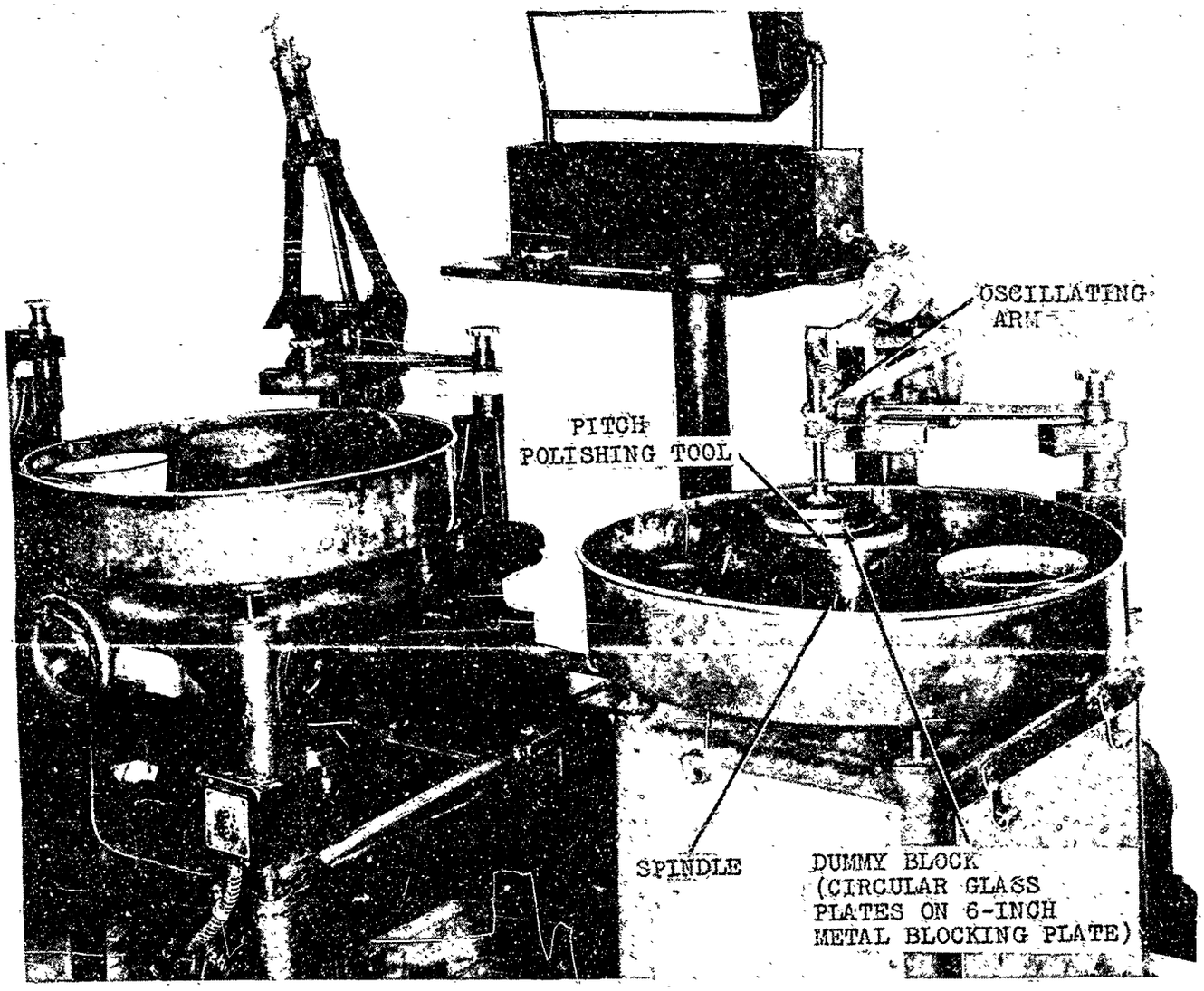

Figure 1511.—Polishing Machine for Preparation of Pitch Polishing Tool.

ishing tool and the roof face identified as the least flat is placed on the stationary polishing tool, in such a position that the hand-polishing action is from the left side of the tool across the entire diameter as indicated by the double arrow and inset in Figure 1512. During the polishing of any correction, the roof edge is always the trailing edge.

Because no other single operation requires more deftness than the hand-polishing correction, much practice and close attention to detail are necessary to become proficient. Of all the details, the most important is that of the finger positions shown in Figure 1512, and described earlier in the chapter.

During the hand-polishing correction, it will be found that a greater lean of the left hand will produce a plus effect and thus correct a negative error in the angle, while a greater lean of the right hand will produce a minus effect and thus correct a positive error in the angle.

After a few attempts at making the hand-polishing correction, the many factors which contribute to the uncertainty of the operation become apparent. Variations of temperature which affect the plasticity of the pitch polishing tool are the most distressing, although the effects may be reduced by the use of automatic thermostatic controls. Each change, whether

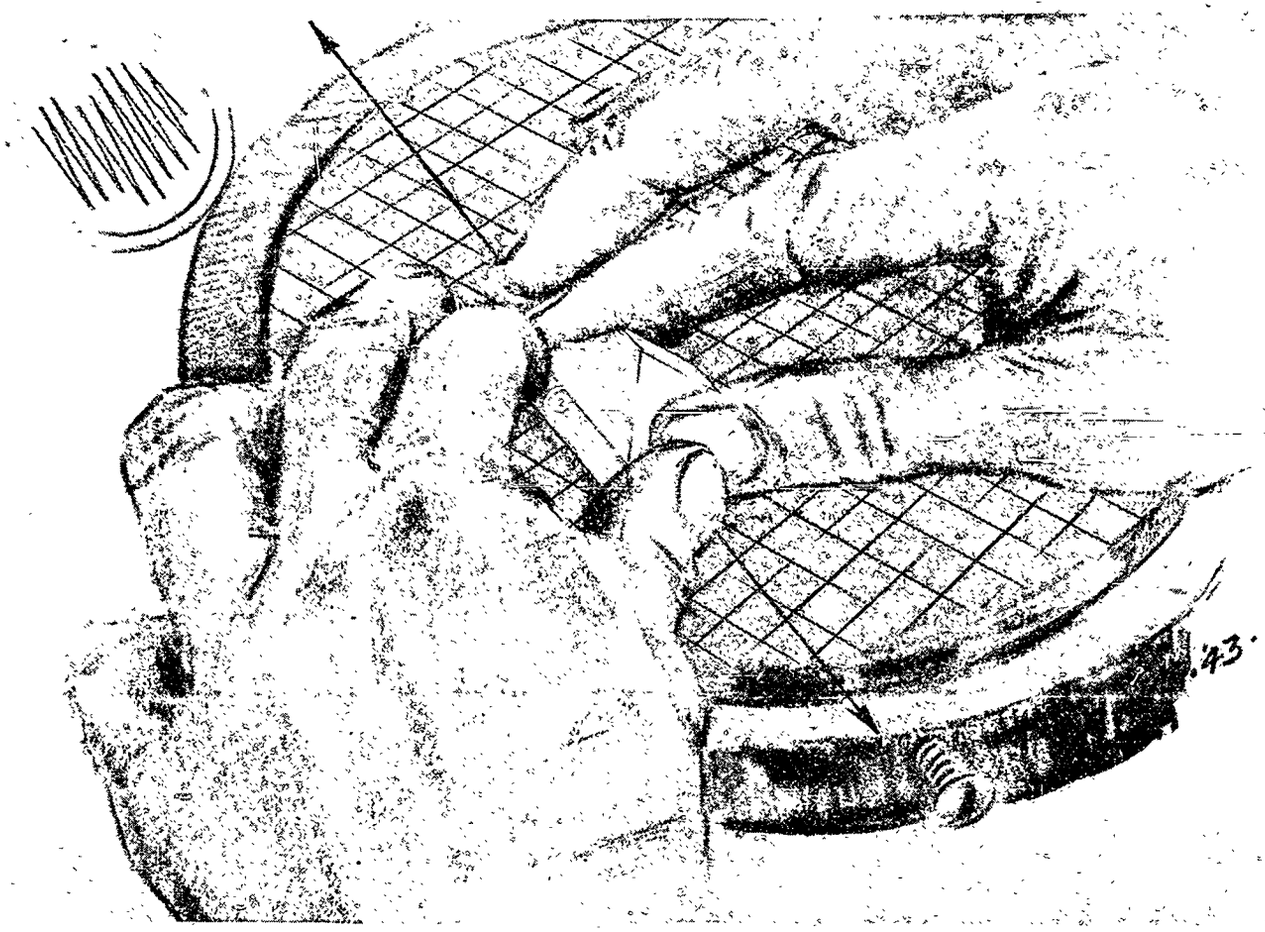

Drawing by Russell W. Porter

Figure 1512.—Stroke and Finger Positions for Hand Correction of the Roof Angle of an Amici Prism Blank.

due to climate or to the temperament of the operator, influences the surface obtained. The surface conditions which may arise during the correcting operation, and the corrections which should be made, are outlined in detail in Figure 1513. This chart is very helpful to many operators.

Upon the completion of the hand-polishing correction, the prism is laid aside until it becomes adjusted to room temperature. It is then tested and, if necessary, is corrected further. Care should be taken to handle the prism as little as possible because any handling will transfer body heat to the prism, cause the surfaces to expand unevenly and thus give an incorrect reading when tested. After the prism has been corrected to within tolerance, all ground faces are painted black, and the polished faces are cleaned with alcohol or ammonia. Permissible tolerances for the finished amici prism are:

Roof angle	± 2 seconds
90° base angle	± 4 minutes
45° angles	± 2 minutes
Roof faces	¼ wave length, convex or concave
90° faces	½ wave length, convex or concave

CHART SHOWING EIGHT UNDESIRABLE SURFACES OF A ROOF FACE, THE CAUSES AND NECESSARY CORRECTIONS

Optical Flat on Roof Face of Prism

1. This chart is designed to interpret the nine most common types of surface possibilities encountered in the manufacture of prisms used in Fire Control Instruments. The one illustrated at the right is the acceptable type to which the other eight must be corrected by hand polishing in order to insure good definition. It is assumed that the tool used for hand polishing is flat in all cases. Defects and corrections are classified by reference to a normal stroke.

Fringe System Centered

Fringe System Decentered

Sections

ACCEPTABLE—because fringes are within ¼ wave length of flatness

2. 'Fringe System Centered' means optical flat is in complete contact with surface being tested.
3. 'Fringe System Decentered' means optical flat is slightly tilted in order to determine fringe contour.

Defects			Cause of Defect	Correction
1.	Fringe System Centered	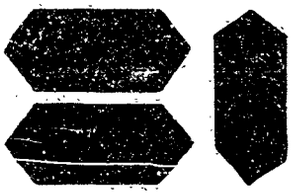	CONCAVE — Result of convex tool or of a fast stroke.	Decrease pressure; decrease length and speed of stroke.
	Fringe System Decentered		CONVEX—Result of concave tool or too heavy a stroke.	Increase length and speed of stroke.
	Sections		ROCKING—(more convex) Result of rocking hands due to inexperience.	Increase pressure; increase length and speed of stroke.
	Interpretation	Ellipsidal		
2.	Fringe System Centered	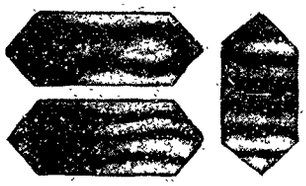	Concave and beveled, result of convex tool or fast light stroke and inexperience.	Decrease pressure and decrease length of stroke slightly more than for correction of "concave" lengthwise only.
	Fringe System Decentered			
	Sections			
	Interpretation	'Eye Glass'		
3.	Fringe System Centered	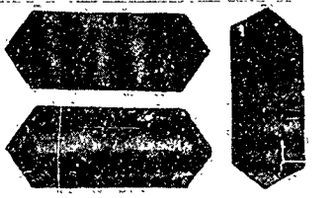	Result of uneven application of pressure.	Exert pressure evenly.
	Fringe System Decentered			
	Sections			
	Interpretation	Convex cylinder (lengthwise only)		

Figure 1513.

Defects			Cause of Defect	Correction
4.	Fringe System Centered	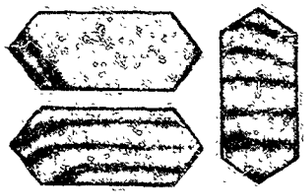	Caused by greater pressure on one end than on other.	Exert pressure evenly.
	Fringe System Decentered			
	Sections			
	Interpretation	Hooks		
5.	Fringe System Centered	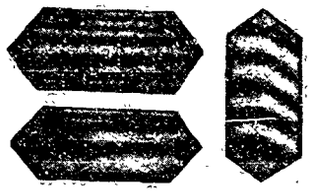	Too much pressure on one side of the prism blank, resulting in a double surface.	Increase and exert pressure evenly.
	Fringe System Decentered			
	Sections			
	Interpretation	Beveled Face		
6.	Fringe System Centered	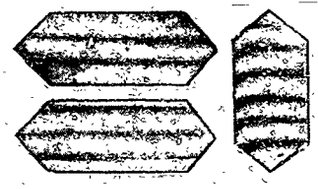	Result of irregular tool surface and of shifting pressure from one hand to the other.	Increase and exert pressure evenly.
	Fringe System Decentered			
	Sections			
	Interpretation	Turned Down Edge or "S" Bevel		
7.	Fringe System Centered	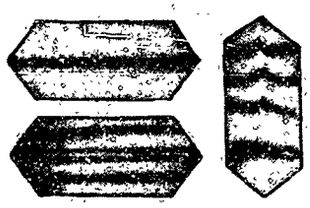	Result of irregular tool surface and of shifting pressure from one hand to the other.	Increase and exert pressure evenly.
	Fringe System Decentered			
	Sections			
	Interpretation	Relatively Flat but Irregular		
8.	Fringe System Centered	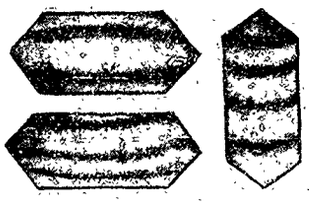	Result of convex tool, or of a fast stroke.	Decrease pressure; decrease length and speed of stroke.
	Fringe System Decentered			
	Sections			
	Interpretation	Concave Cylinder (crosswise only)		

Figure 1513 (Contd). *Drawings by Russell W. Porter*

OPTICAL CONTACT CORRECTIONS

The following three alternative methods of finishing roof-angle prisms eliminate the need for hand correction of the roof angle.

Bausch & Lomb Optical Company

The prism blanks are rough ground in a manner similar to that described in Chapter 4, and both roof faces of each prism blank are polished. Then, using the roof angle as a reference angle, the 90° faces are corrected by hand, using an adjustable goniometer, such as that shown in Figure 1514, to test the angles. This method is the reverse of the usual procedure in which the 90° faces are ground and polished first and the roof angle is then corrected with reference to the 90° faces.

Blocking.—The first roof faces of the prism blanks are fine ground and polished as described in Chapter 11. This prepares the blanks for blocking, preparatory to grinding and polish-

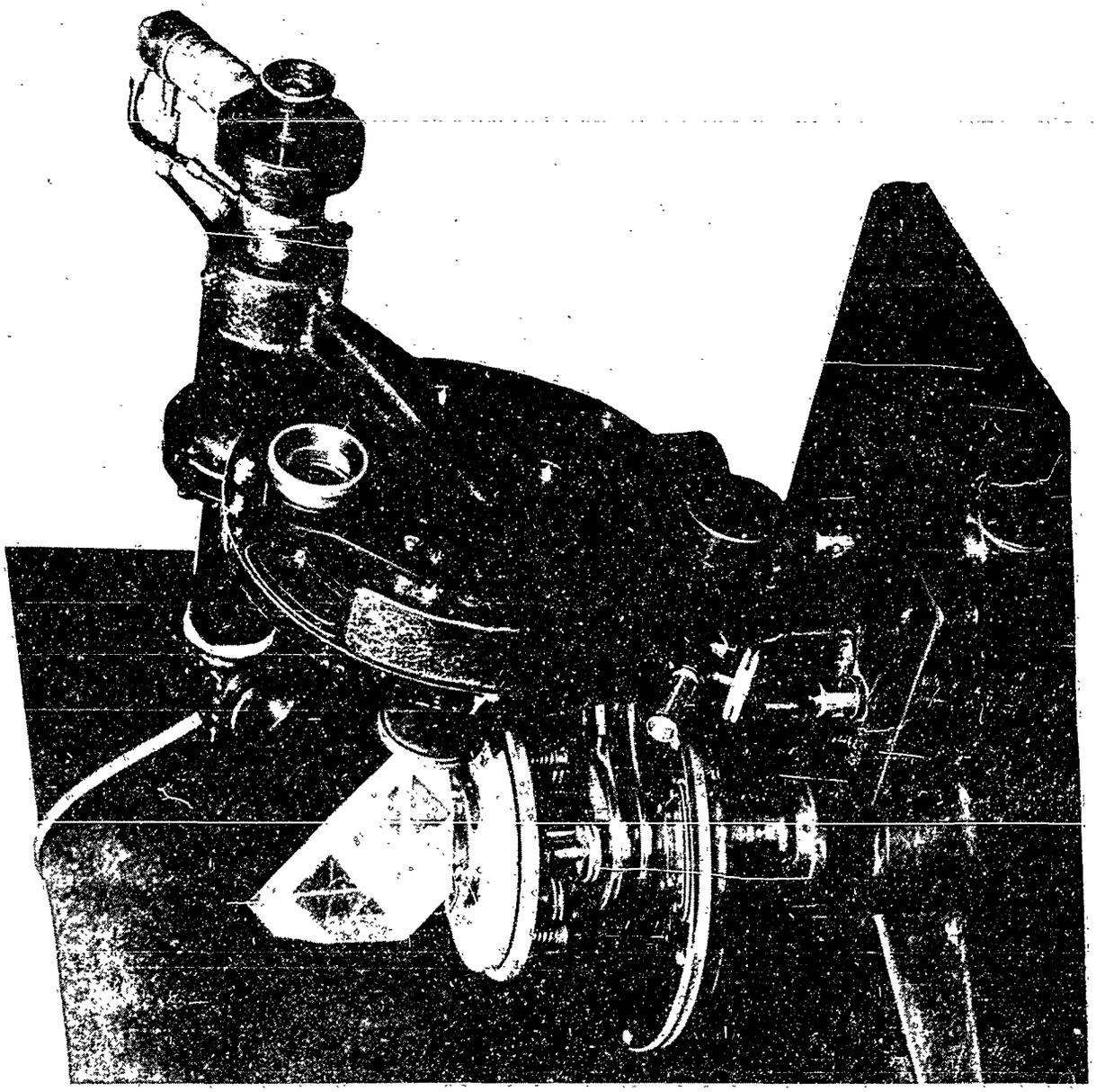

Bausch & Lomb Optical Company

Figure 1514.—Adjustable Goniometer Used for Checking the Angles of a Roof Prism.

ing of the second roof faces. In order to accomplish this blocking properly it is necessary to use a precision rectangular plano-parallel glass plate which has its side faces plane and parallel to each other and its top and bottom faces plane and parallel to each other and at 90° to its side faces. The tolerance of any 90° angle between any adjacent side and top or bottom face of the plate cannot be more than is permissible in the finished roof angles of the prisms themselves.

The polished roof faces of the prism blanks are placed in optical contact with the side faces of such a plate (half of the blanks being placed on one side face and half on the opposite side face) and are located so that the faces still to be ground are as nearly as possible in the same plane with each other and with the top face of the parallel plate, as shown in Figure 1515. The next step is to place the rectangular parallel plate, with the contacted prism blanks adhering to it, on a circular plano-parallel glass blocking plate so that its bottom face is contacted optically to the circular blocking plate. In actual practice, any convenient number of rectangular plates with their contacted prism blanks may thus be placed on the circular plano-parallel blocking plate.

Using the necessary number of curved glass segments, each having the same height as the rectangular plates referred to above, a ring of glass is now set up around the entire system.

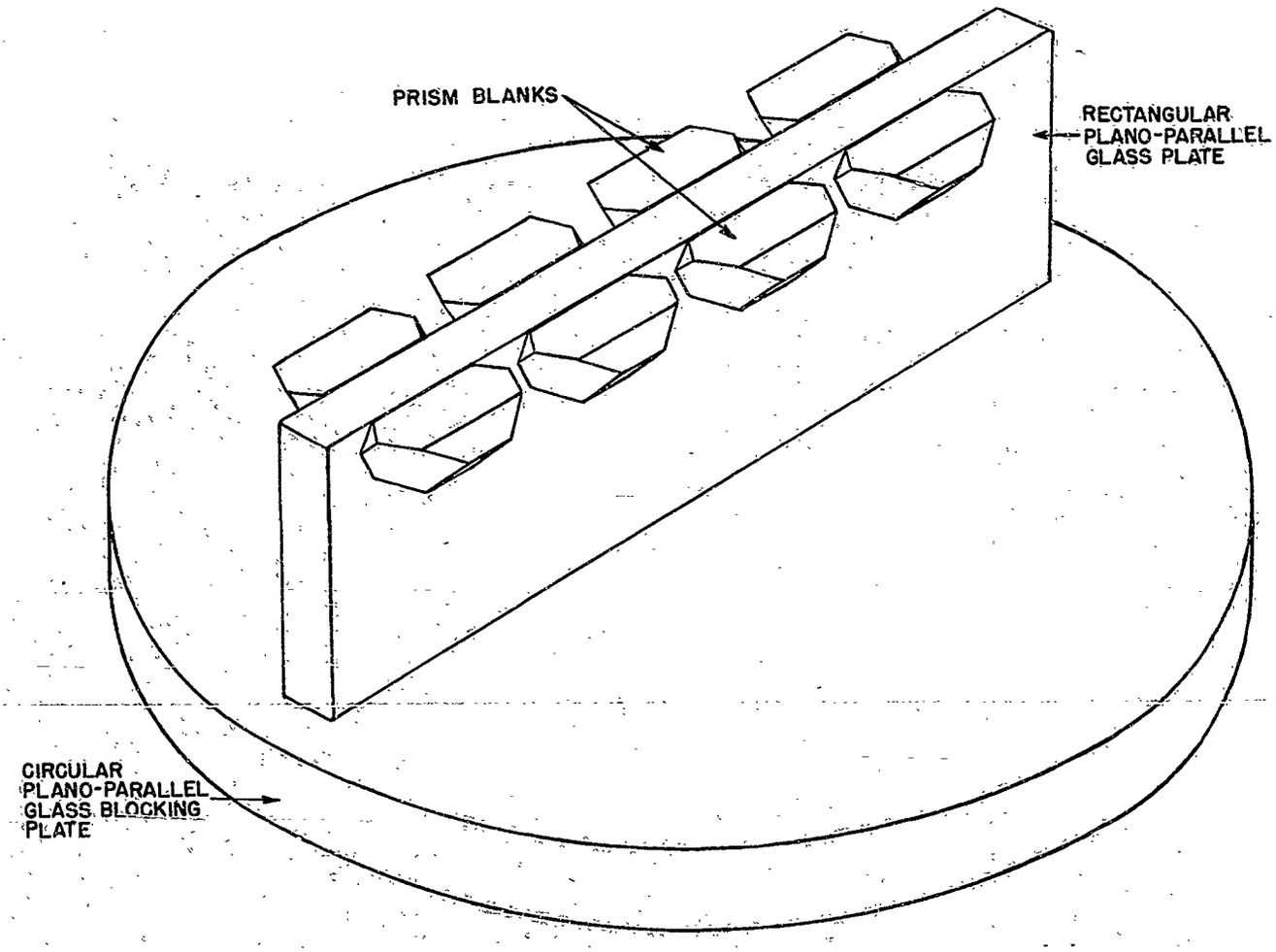

Bausch & Lomb Optical Company

Figure 1515.—Amici Prism Blanks Contacted Optically with a Polished Plano-parallel Glass Plate Which is Contacted Optically with an Optically Flat Blocking Plate.

This is done by placing the glass segments in optical contact with the outer top face of the circular blocking plate, as shown in Figure 1516. Then the spaces are filled with 'plasticene'. Plasticene is used for two reasons: primarily it waterproofs the work block and excludes any water which might seep through the system, thus causing uneven temperatures in the contacted elements and consequently breaking their optical contacts; also the plasticene aids in holding the elements in place during subsequent grinding and polishing operations.

Grinding and Polishing. — After blocking has been completed, the second roof faces of the prism blanks (together with the top faces of the rectangular parallel plates and the curved glass segments) are fine ground and polished parallel with the top face of the circular blocking plate.

At this point an autocollimator is used to take a reading through the top faces of the rectangular parallel plates so as to check that parallelism of these faces has been maintained with the bottom face of the circular plano-parallel blocking plate. If parallelism between these faces is indicated, then it follows that the two roof angles of each prism blank are at 90° to each other. This is because the polished first roof faces of the prism blanks are all in optical contact with some one of the parallel 90° sides of the rectangular plates, the rectangular plates are in optical contact with the top face of the circular blocking plate, and, in turn, the top and bottom faces of the blocking plates are parallel. At the beginning of the operation the faces to be finished are, therefore, out of parallel with the top faces of the rectangular plates at the same level and to the same degree that the prism blank roof faces deviate from 90° (see Figure 1517). By fine grinding and polishing the entire top surface of the work block, and by maintaining the parallelism of the top surface with the bottom surface during the operation, the angle formed by the two roof faces of the prism blanks must necessarily be 90°. (See Figure 1517.)

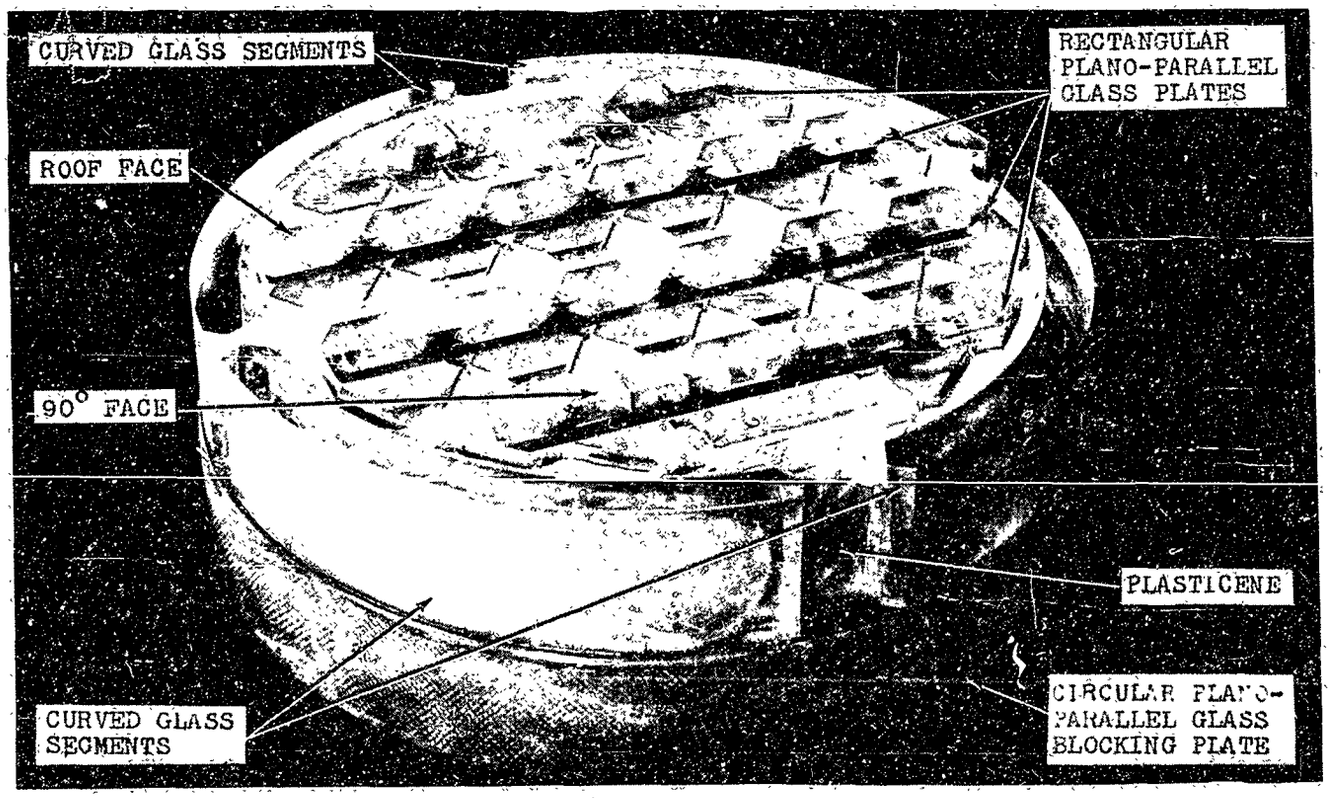

Bausch & Lomb Optical Company

Figure 1516.—A Block of Amici Prism Blanks Ready for Fine Grinding and Polishing.

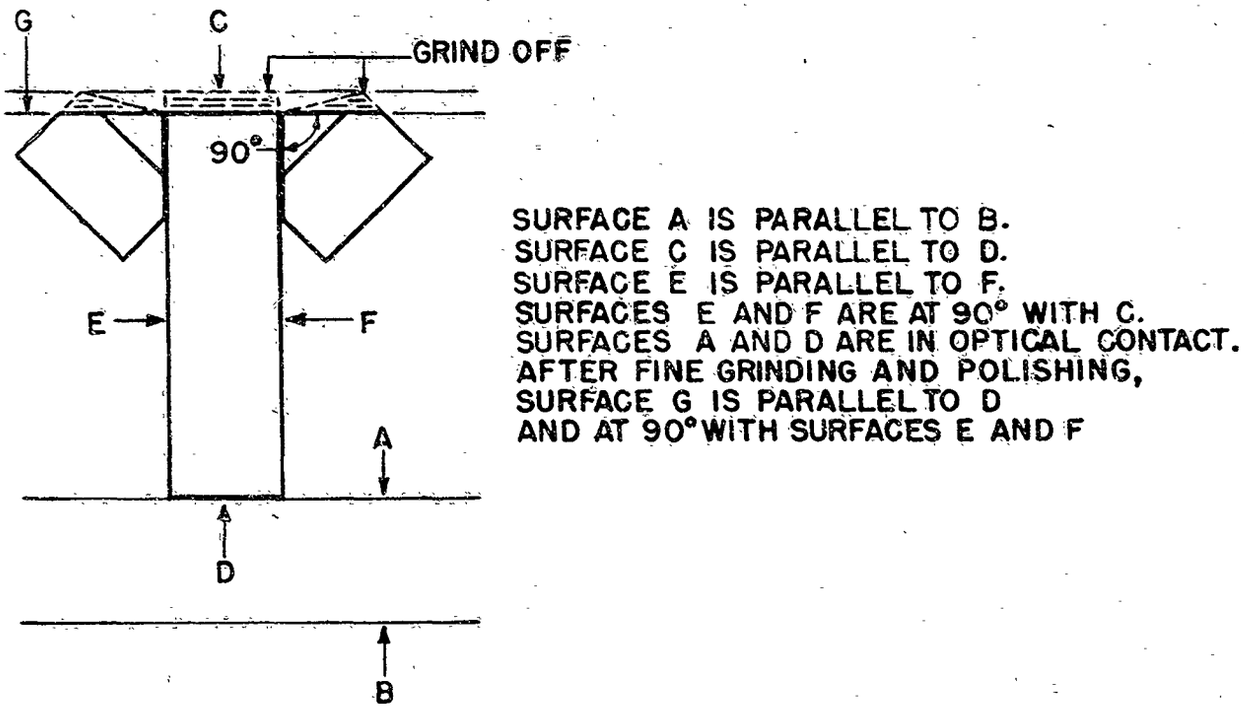

Figure 1517.—Amici Prism Blanks Contacted Optically to a Polished Plano-parallel Glass Plate for Correcting the Roof Angle.

When polishing of the roof faces is completed, the circular blocking plate is separated from the rest of the work block by a few quick passes of a gas flame, the plasticene is removed by hand, and the prism blanks are removed from optical contact with the plate by a few more quick passes of the gas flame.

The prism blanks are now plaster blocked as described in Chapter 9, and then one of the 90° faces is fine ground and polished as described in Chapter 11. After this, the second 90° face of each blank may be fine ground and polished by means of rectangular plano-parallel plates and a circular plano-parallel blocking plate as described above for the roof faces.

Next, a protective coat of shellac is applied to the roof faces of the prisms, leaving a small window in the center of each so that the four 60° angles can be checked with a goniometer. From this point on, hand correction of the 90° faces may be applied singly to each prism in the same manner as that outlined for hand correction of roof faces earlier in this chapter. Constant checks of the 60° angles through use of a goniometer (see Figure 1514) should be resorted to in order to keep within tolerances and complete the correction of each prism as readily as possible.

In summary, it may be stated that the optical contact method can be used to fine grind and polish any prism face that is at 90° to a polished prism face. An examination of Figure 1516, for example, shows both roof faces and 90° faces blocked for grinding and polishing.

Naval Gun Factory

The description which follows is based upon *Description of Manufacturing of Roof Prisms*, S.K. No. 85461, steps 14 and 17, a Naval Gun Factory publication.

After the prism blanks are rough ground, the blanks are plaster blocked as described in Chapter 9, and then one of the roof faces is fine ground and polished as described in Chapter 11. The blanks are now ready for blocking, fine grinding, and polishing of the second roof faces. This operation, which must be performed with enough precision to obtain an angle of 90° ± 2 seconds between the roof faces, is accomplished as follows.

Use is made of a special blocking fixture consisting of an iron ring, inside which is cemented a glass ring composed of curved glass segments, and a block cover plate. (See Figure 1518.) The cover is provided with thumb screws for securing the ring, and with a center hole and several eccentric holes for attachment to a spindle. Use is also made of a rectangular, plano-parallel glass plate. This plate is fine ground and polished, but has small rough spots ground on both side faces so as to reflect light in the mounted prism, as indicated in Figure 1522.

The first step in blocking the prism blanks is to place the rectangular plate on edge on an optically-flat locating plate. Then the polished roof faces are placed in optical contact with the side faces of the glass plate (one opposite the other) so as to cover the rough spots referred to above. In locating the blanks, care is taken that they are abutted against the locating plate so as to insure that the faces still to be ground are as nearly as possible in the same plane with each other and with the bottom face of the parallel plate. The ring blocking fixture, glass edge downward, is then set up around the system and plaster is poured in the block. (See Figure 1519 which shows two pairs of blanks in position after mounting has been completed.)

When the plaster has hardened, a small V-notch section is cut out of the plaster on the side opposite from the work surface, so as to expose the tops of the blanks for optical testing in an autocollimator as described below. The cover is now fastened by thumb screws to the iron ring and the work block is freed from the locating plate. The exposed roof faces are fine ground, polished and tested for flatness with an optical flat. (See Figures 1519 and 1520.)

The work block is removed from the block cover plate and turned over and mounted in the

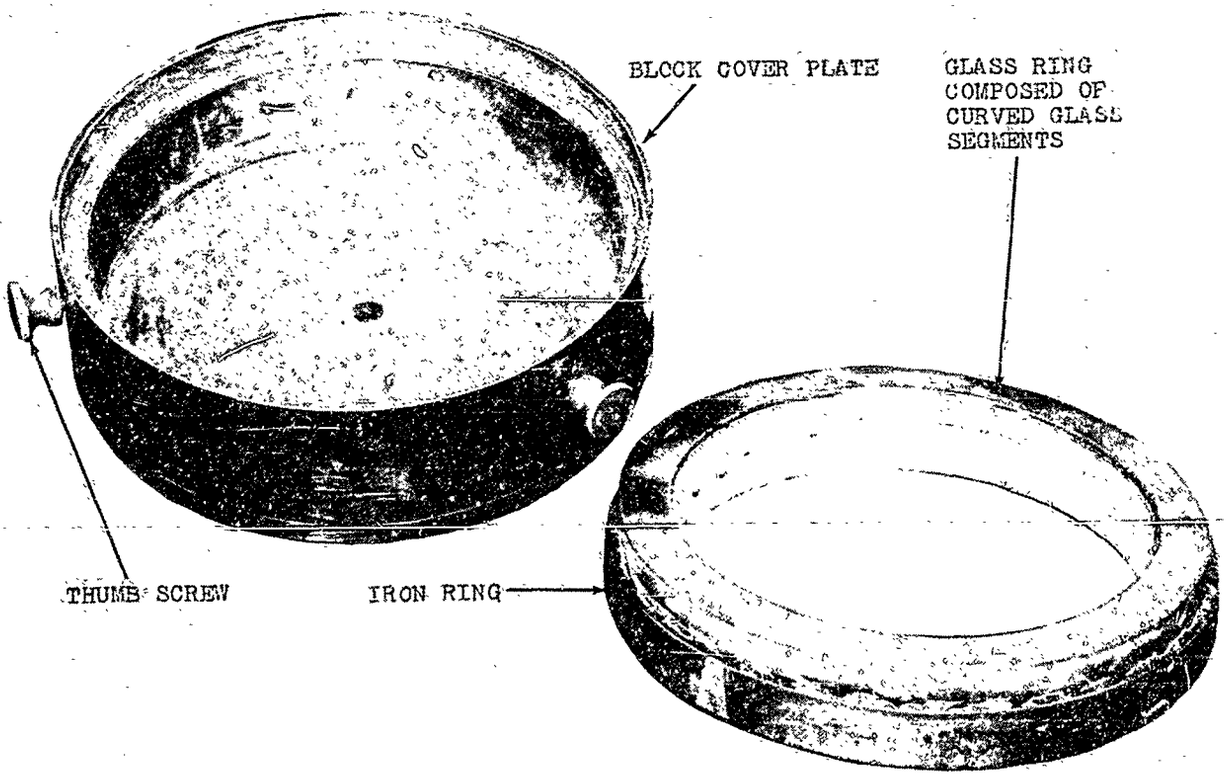

Naval Gun Factory

Figure 1518.—Equipment for Blocking Amici Prism Blanks for Fine Grinding and Polishing Second Roof Faces.

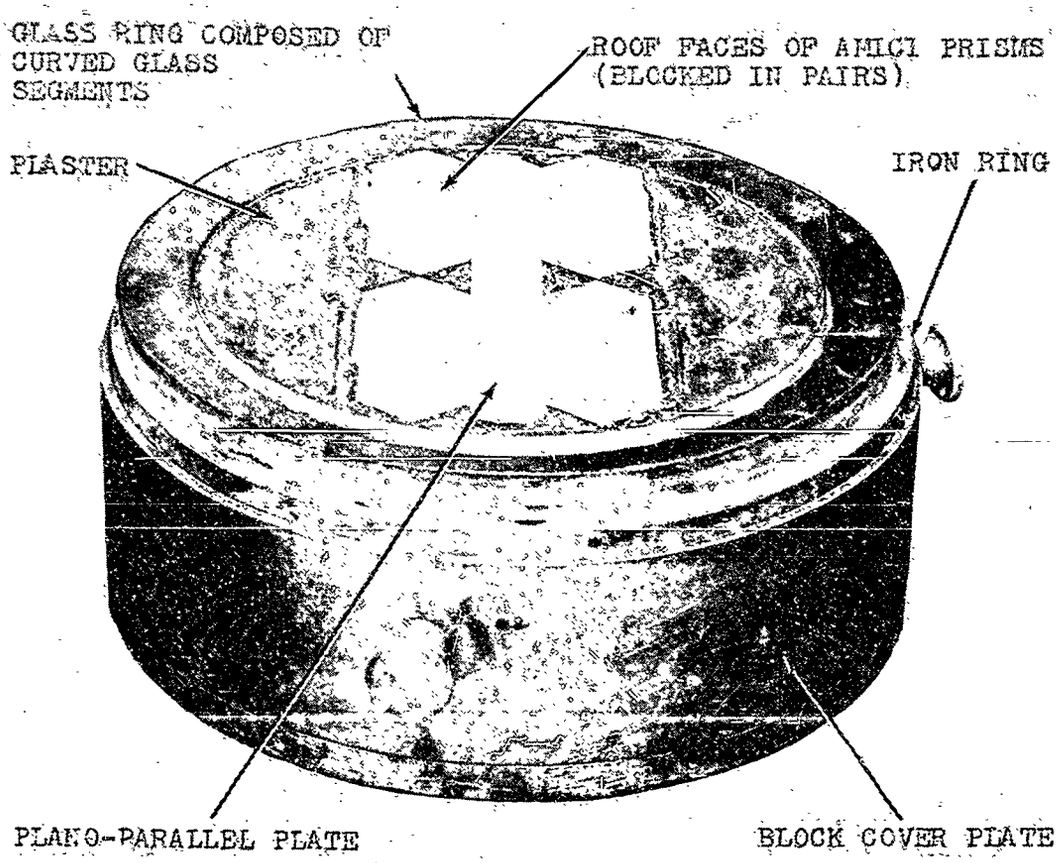

Naval Gun Factory

Figure 1519.—Amici Prism Blanks Blocked for Fine Grinding and Polishing Second Roof Faces.

autocollimator so as to expose the top of one prism to the optical axis of the autocollimator, as shown in Figure 1521. Before using the autocollimator, the tops of the prism blanks are wetted with monochlorobenzene and an optically flat glass plate is placed over them. This autocollimator checks the 90° roof angle to within 2-second limits.

Details of the use of the autocollimator are indicated in Figure 1522. If the reflected cross lines of the first reticle are exactly superimposed on the cross lines of the second reticle, the roof angle will be 90° ± 2 seconds. Misalignment of the reticles, indicating a condition in excess of tolerance, will be taken by the operator as information to guide him in any further polishing necessary to bring the roof angle within the required limits. At the completion of this operation, a protective coat of sealing wax is applied to both roof faces.

Next, the 90° faces are plaster blocked, fine ground and polished. Then the prisms are checked with a 28-power telescope and collimator. The collimator target consists of a series of horizontal and vertical lines, together with two pinpoints of light, one on either side of the lines. The prism is set in a mount in front of the collimator with one 90° face perpendicular to the line of sight of the collimator. The telescope, held by an adjustable swinging arm, is swung around so that its line of sight is perpendicular to the other 90° face of the prism. The telescope is then focused through the prism onto the target in the collimator. Single, well-defined images indicate a prism with satisfactory roof faces and angle. Double images, astigmatism, or distortion of the shape of the pinpoints of light indicate either lack of required planeness of surfaces or a discrepancy in the 90° roof angle. In practically all cases,

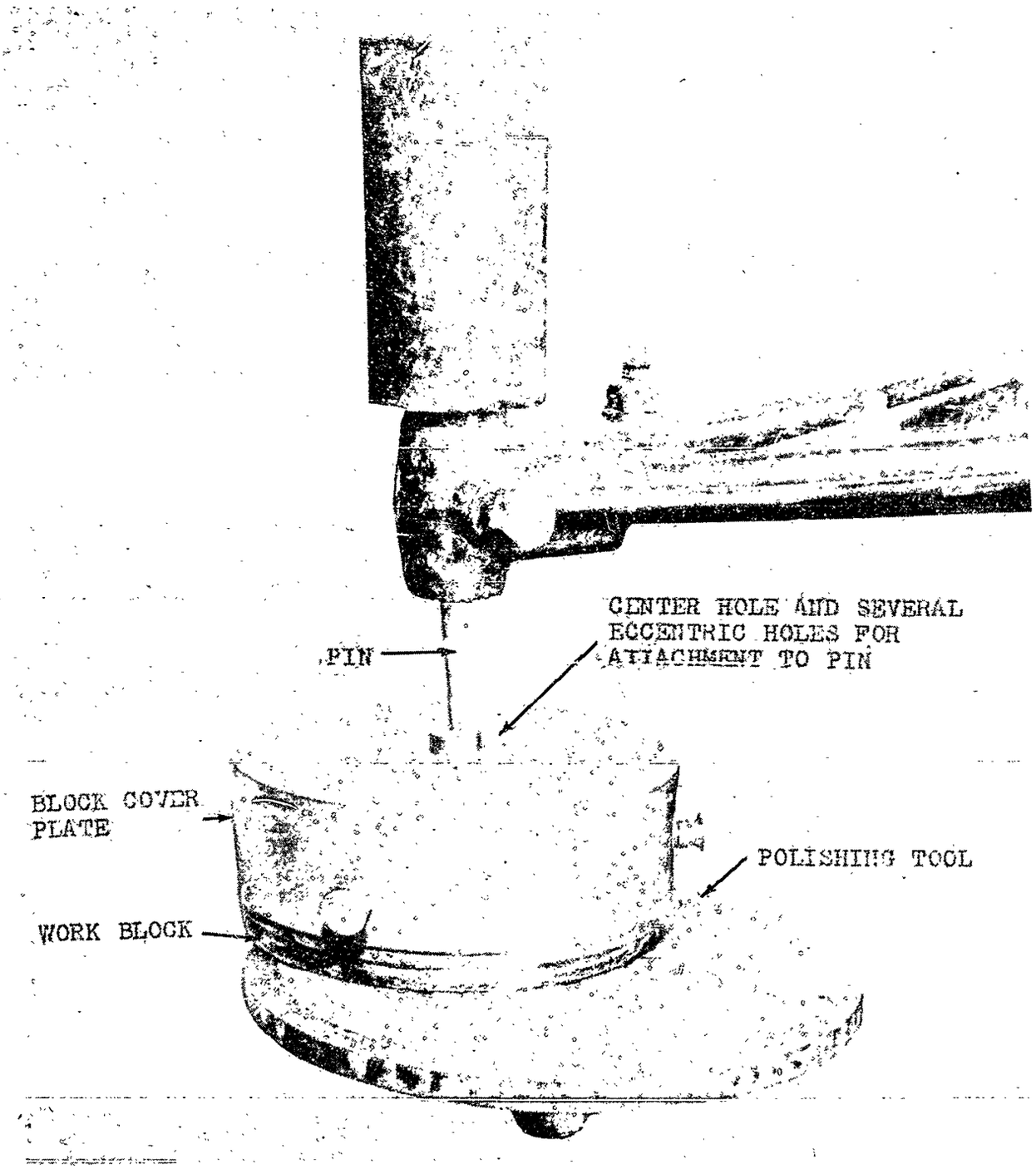

Naval Gun Factory

Figure 1520.—Block of Amici Prism Blanks Ready for Polishing Second Roof Faces. The setup for fine grinding uses a grinding tool instead of the polishing tool shown.

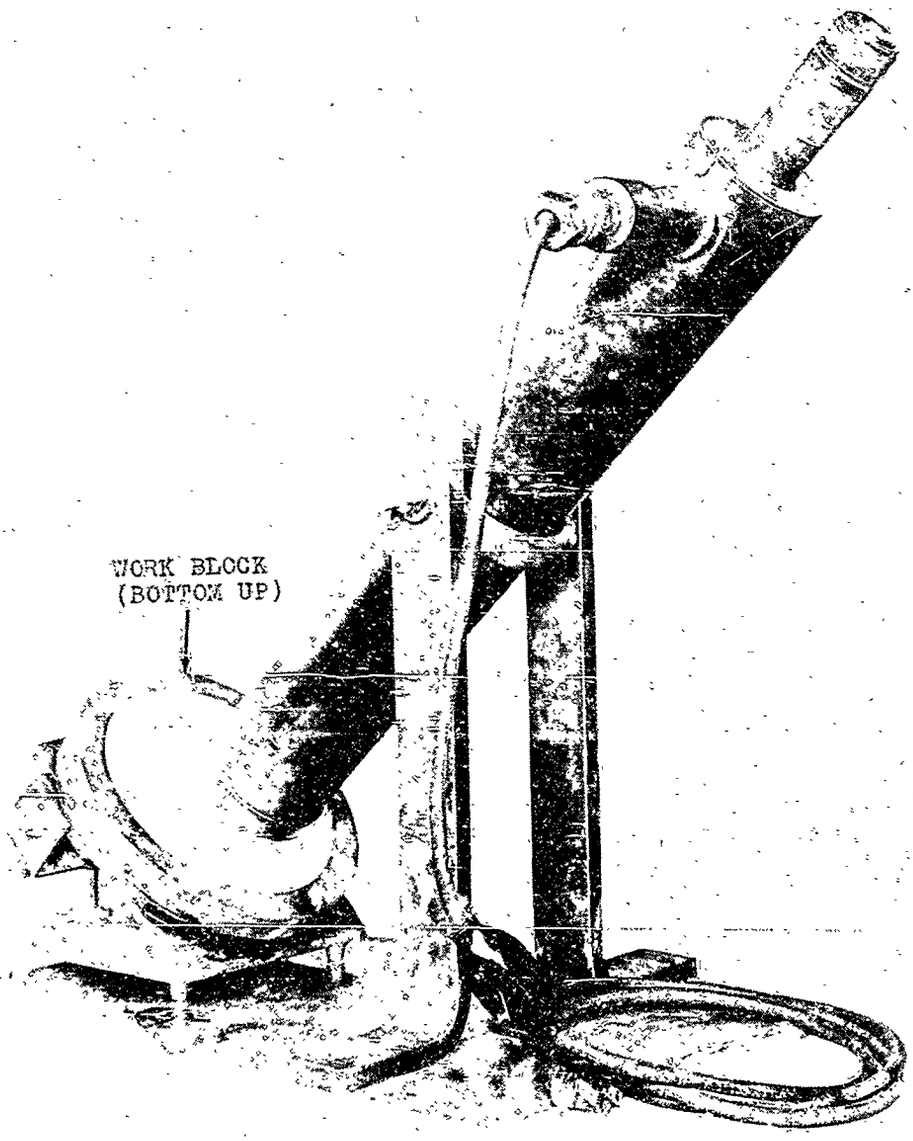

Naval Gun Factory

Figure 1521.—Setup for Checking Roof Angles of an Amici Prism with an Autocollimator.

hand polishing with rouge and cloth by a skilled worker will correct any indicated deficiencies.

The Perkin-Elmer Corporation

The following 'fence' method of mounting by optical contact eliminates the need for hand correction.

First Roof Face. — The prism blanks are rough ground as described in Chapter 4. Then the two 90° faces are plaster blocked, fine ground and polished as described in Chapters 9 and 11.

Next, the blanks are fastened together in pairs at their roof faces through use of an adhesive consisting of equal parts of beeswax and rosin. (Carnauba wax may be added if the adhesive mixture is too soft.) The pairs of blanks are positioned on a metal locating plate and, with the aid of a film of water are 'wrung' into contact with the plate. They are

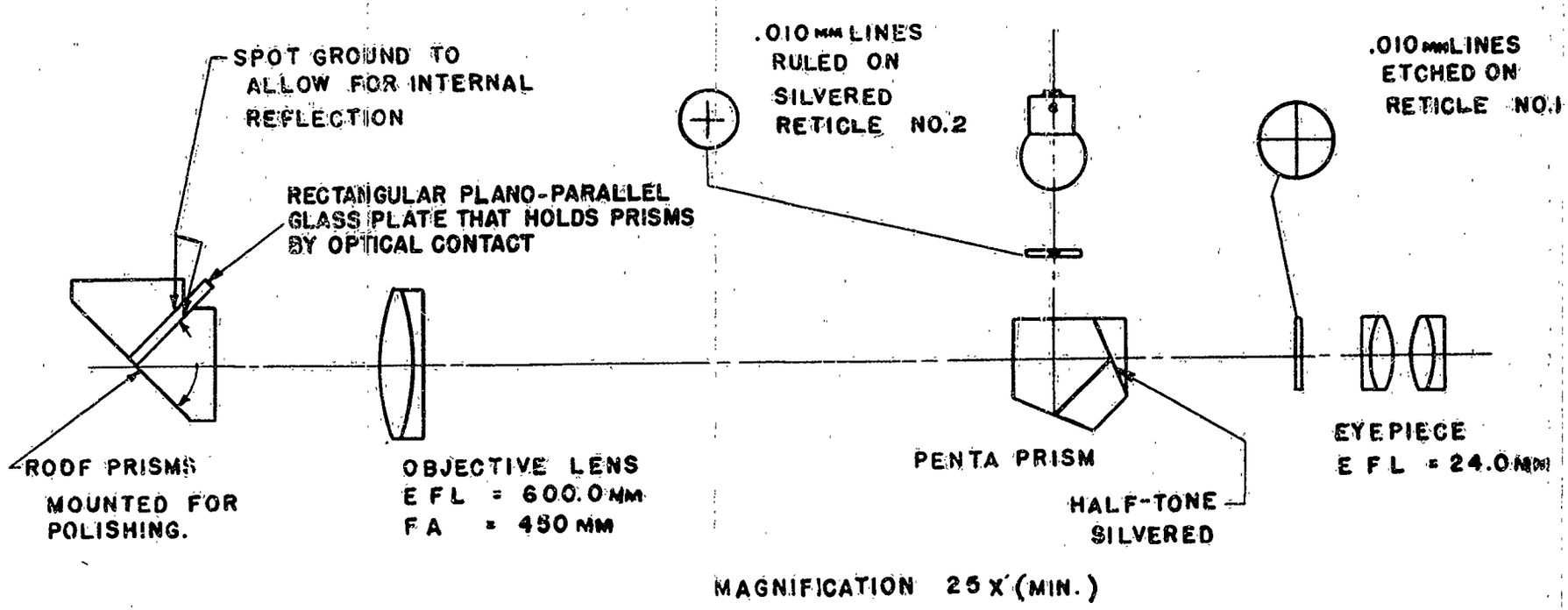

MAGNIFICATION 25 X (MIN.)

1. CROSS ON RETICLE NO.1 SHOULD APPEAR TO BE EXACTLY SUPERIMPOSED ON CROSSLINES OF RETICLE NO. 2
2. AN ERROR OF MORE THAN 2 SECONDS IN ANGLE WILL BE INDICATED BY ANY OBSERVED MISALIGNMENT OF THE TWO CROSSES
3. SYSTEM MUST BE FREE FROM SPHERICAL AND CHROMATIC ABERRATIONS, COMA AND ASTIGMATISM

Naval Gun Factory

Figure 1522.—Schematic Diagram of Autocollimator Used for Checking Roof Prisms.

then blocked with plaster and made ready for grinding. The first roof face of each blank is now fine ground and polished as described in Chapter 11.

Second Roof Face. *Preparing the Fence.*—It should be remembered that the accuracy of this method depends upon the fence. The fence is an equilateral, triangular plate of the same type glass as that in the prism blanks, with each face slightly longer than the length of the roof faces of the blanks. The height (distance between the triangular faces of the fence) is slightly greater than the width of the roof faces of the blanks. If the fence is too low, the blank will not remain in contact during fine grinding and polishing operations, while if it is too high, the pin of the oscillating arm will be too high for optimum polishing.

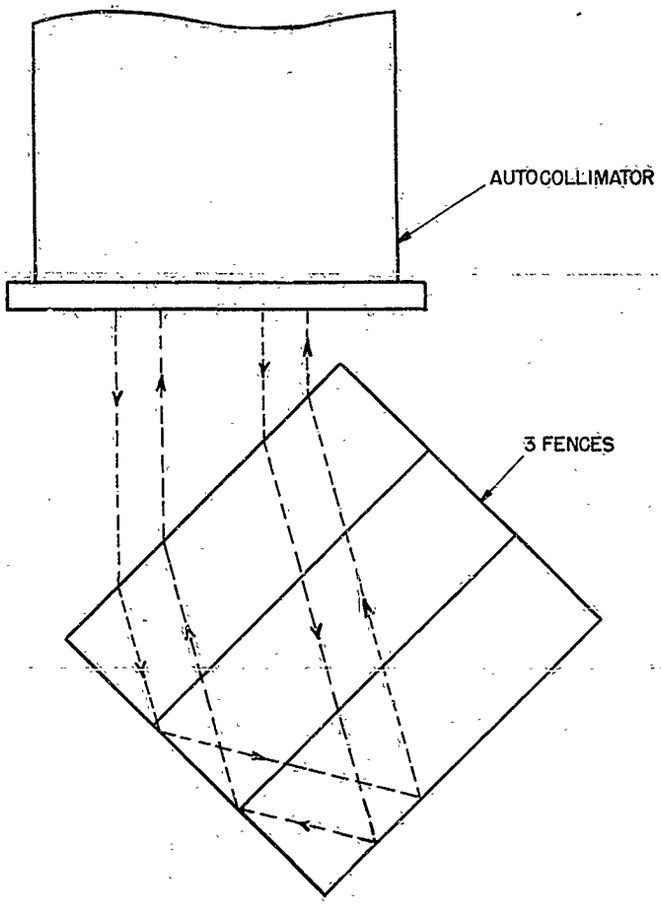

The Perkin-Elmer Corporation

Figure 1523.—Light Path Through Three Fences when Checking with an Autocollimator.

To construct the fences, the glass is sawed into equilateral, triangular pieces, with the allowance of enough extra material to provide for the desired finish. These pieces are ground plane and parallel on a mill. Four of these pieces are then waxed together and rough ground so that the three rectangular faces of the stack are perpendicular to the two triangular end faces. After this, the pieces are separated, blocked, and one triangular face of each is fine ground and polished.

Next the polished, triangular faces of a number of pieces are contacted optically to a large optical flat, and the exposed triangular faces are fine ground and polished parallel to the flat, to within $\frac{1}{10}$ of a wave length. The pieces are then removed from the flat by a quick pass of a gas flame and are contacted optically to each other, through their triangular faces, in stacks of three.

Now the three rectangular faces of the stack are fine ground with #950 and #2600 abrasive, polished (to $\frac{1}{10}$ of a wave length), and brought to an angle of 90° ± 1 second with the triangular faces. The 90° angle is checked in an autocollimator (Figure 1523) and hand corrected within tolerance (90° ± 1 second).

The three fences are separated with a quick pass of a flame, and all edges are beveled except those outlining one triangular face. (From this point on, the triangular face outlined by the unbeveled edges is referred to as the 'bottom', and the opposed triangular surface as the 'top'.)

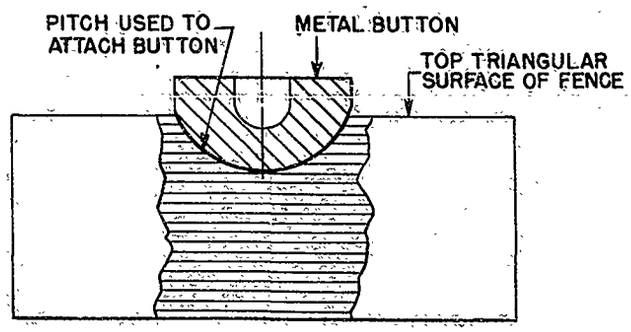

The Perkin-Elmer Corporation

Figure 1524.—Metal Button Attached to a Fence for Receiving the Pin of the Fine Grinding and Polishing Machine.

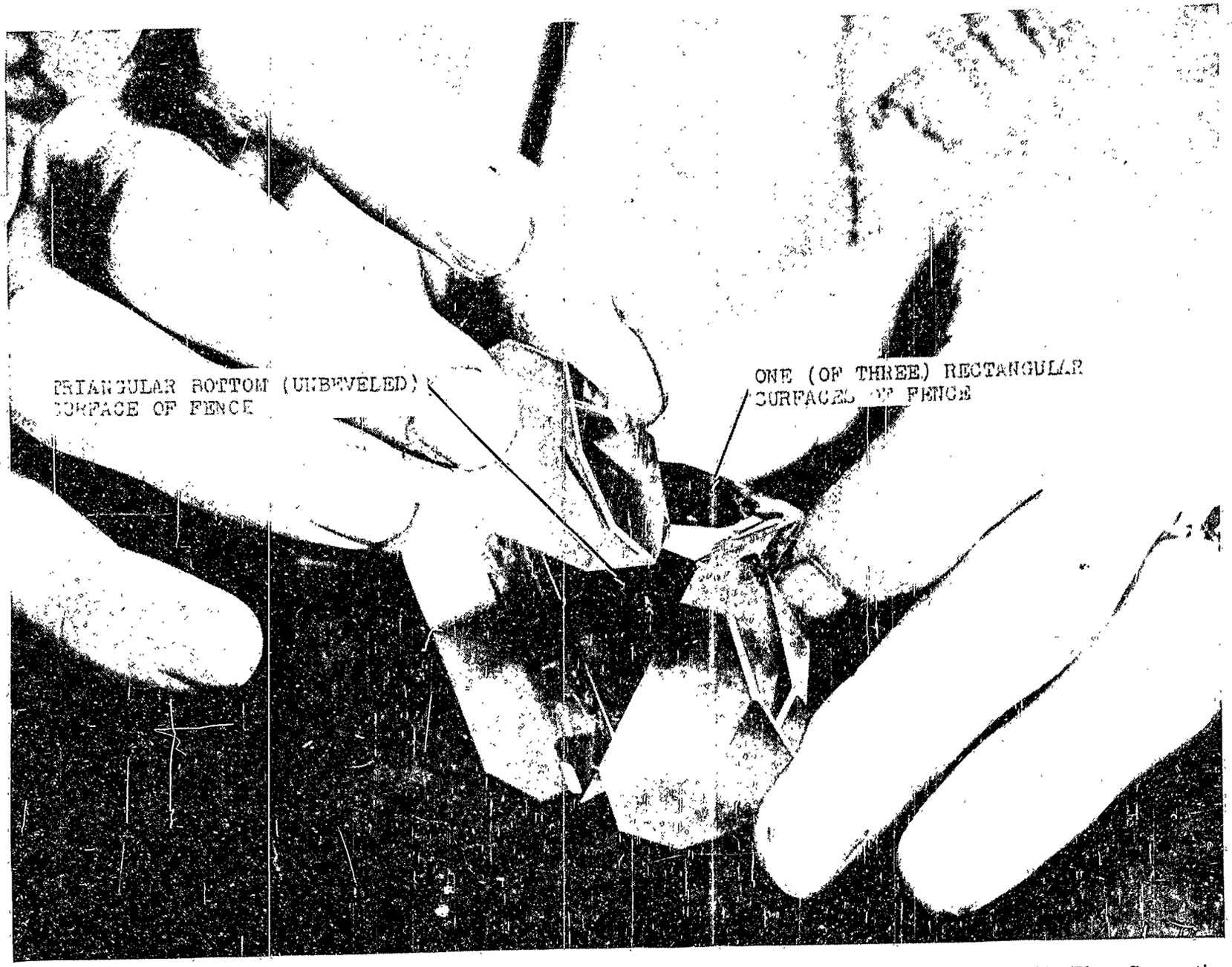

The Perkin–Elmer Corporation

Figure 1525.—Contacting Roof Faces of Amici Prism Blanks with Fence.

A concave spherical depression (0.709 inch across and 0.394 inch radius curvature) is ground into the center of the top face. A metal button (0.394 inch radius), which has a central hole to fit the pin of a fine-grinding and polishing machine, is attached with pitch in the depression in the fence. (See cross section, Figure 1524.) Each fence is now complete and ready for use.

Blocking. — When the polished roof faces are mounted on the side faces of the fence—one prism blank on each of the three side faces of the fence—the unpolished roof face will be in the plane of the bottom face of the fence.

A prism blank and a fence are cleaned thoroughly with ether and cheesecloth and are given a final dusting with a corner of the cloth. Then the first polished roof face of the blank is slid smoothly onto a rectangular face of the fence, the roof edge of the blank being positioned at the bottom of the fence (Figure 1525). A single band is maintained throughout this sliding motion, to insure that any remaining particles of dirt between the faces are pushed aside.

Next, the fence and prism blank are laid on a glass locating plate that has an optically flat face (Figure 1526). With the blank properly oriented against both plate and fence, the blank and the fence are pushed together, whereupon they are seized by optical contact. The above procedure is repeated to add two more prisms to the fence and the blanks are removed from the locating plate. (See Figure 1527.) All surfaces except the bottom and the top of the fence are now shellacked to seal the contacts against moisture and to protect the exposed polished faces. (For more details on optical contact see Chapter 22.)

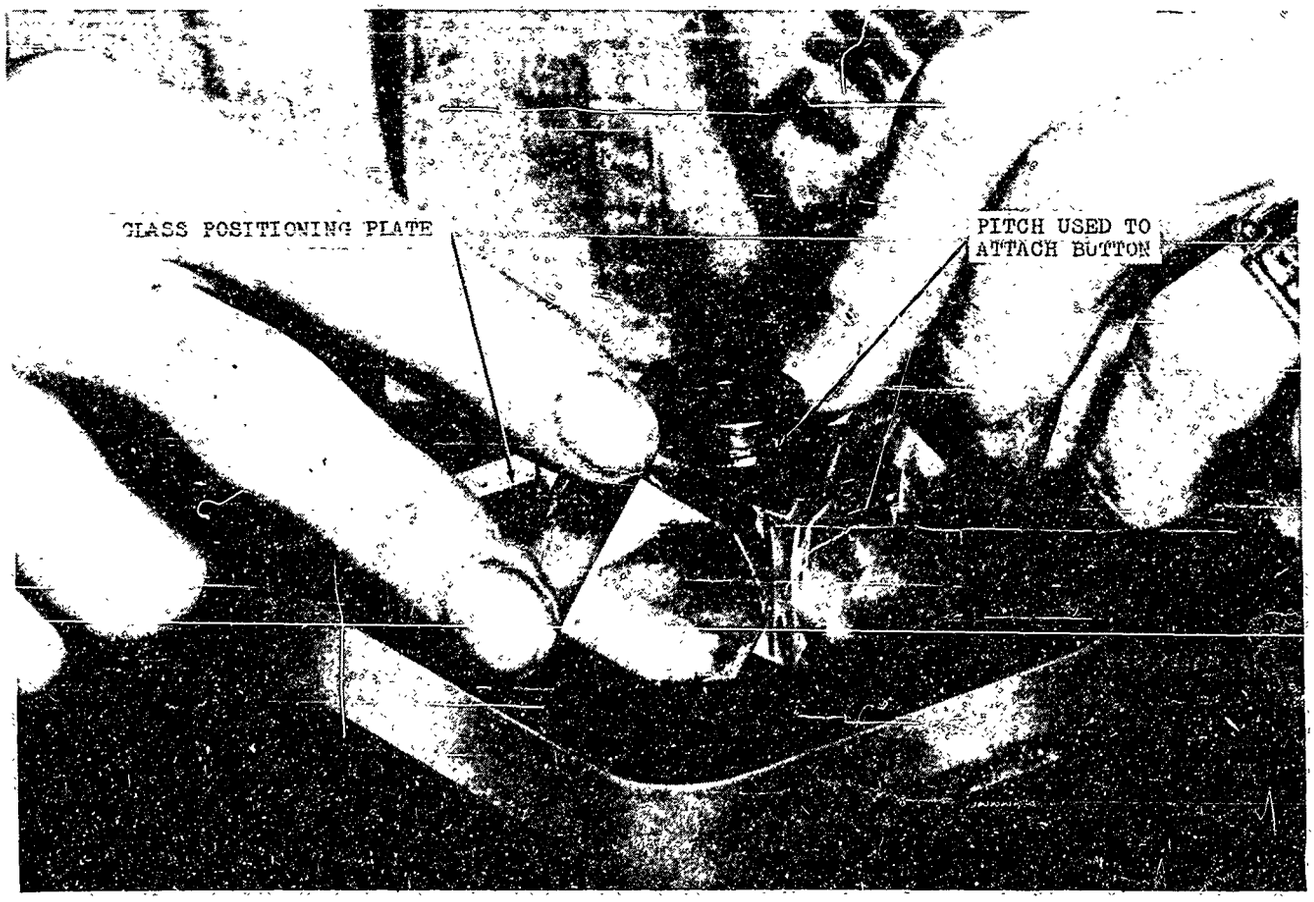

The Perkin-Elmer Corporation

Figure 1526.—Optically Contacting Amici Prism Blanks with a Fence Against Which They Are Already Positioned, Using an Optically Flat Locating Plate.

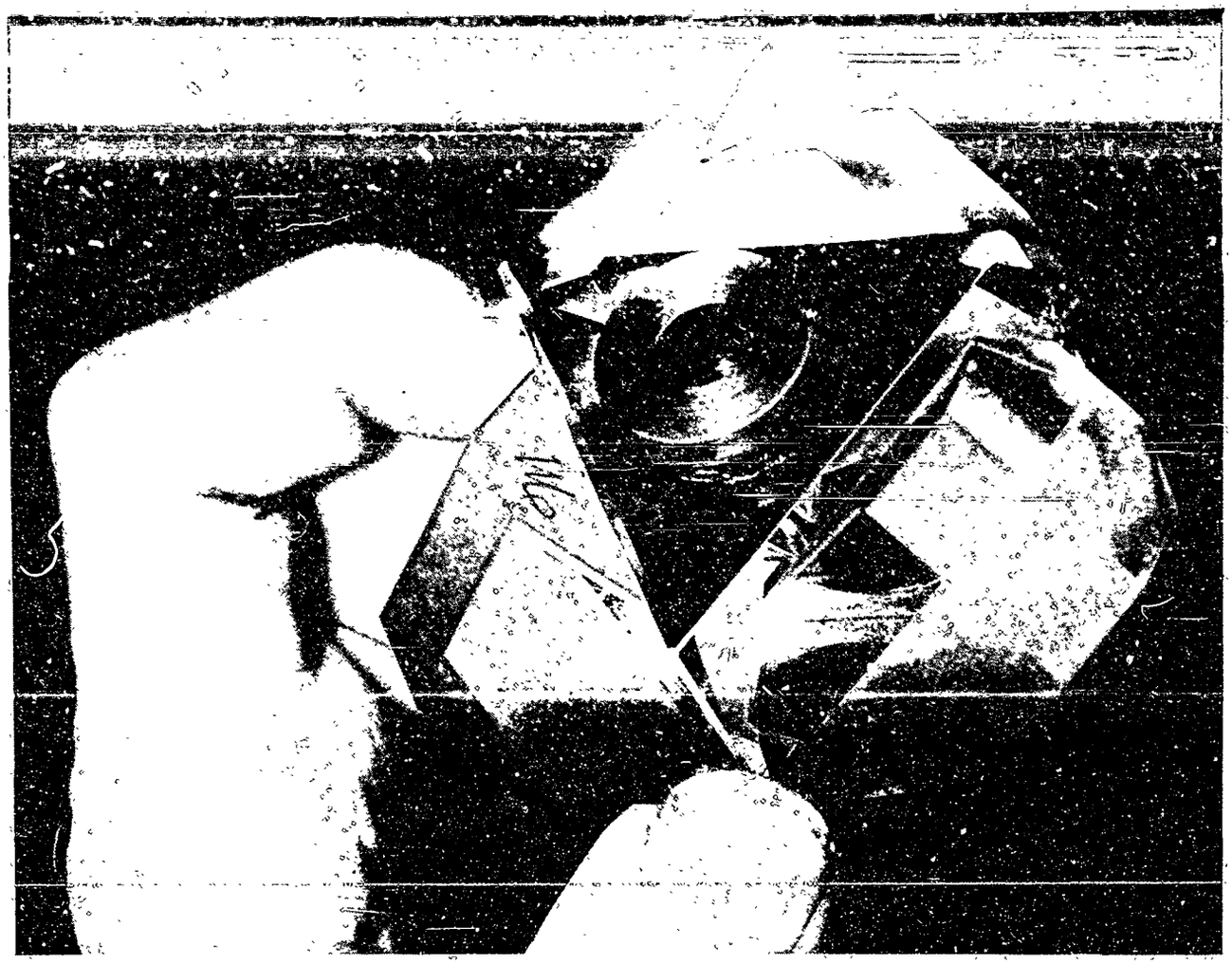

The Perkin–Elmer Corporation

Figure 1527.—Three Amici Prism Blanks After Being Optically Contacted with a Fence.

Grinding.—The fence with three contacted blanks is put on an oscillating-arm machine and ground by hand, using #950 (Bausch & Lomb) abrasive until the polish of the bottom face of the fence is gone. Then the pin is set in the hub of the fence and abrasive grinding is continued with the machine until all chips are removed from the roof edge. (See Figure 1530.)

Checking, Fine Grinding, and Polishing.—The ground work block is then polished for a few minutes, because a slightly polished face will permit a reading to be taken with an autocollimator. The block is set on three balls in a jackknife autocollimator (Figures 1528 and 1529). This autocollimator has previously been set so that a plano-parallel glass plate placed on the balls will return the image of a pinhole to the intersection of a pair of crosswires in the eyepiece. At the first check after initial polishing of the second roof faces of the prisms, it is usually found that the image from the top of the fence does not return exactly to the intersection. This is an indication that the top and bottom faces of the fence are not parallel. In such a case, fine grinding is continued with #2600 (Bausch & Lomb) abrasive, polishing the face at frequent intervals in order to obtain a reading with the autocollimator, until parallelism is restored. When parallelism has been

obtained, the roof angles are 90° within the accuracy with which the fence was made. The work block is then transferred to a polishing tool and the faces are polished to within 1/10 wave length, while maintaining parallelism. (See Figure 1530.) The finished prism is released from contact with the fence by quick passes of a gas flame.

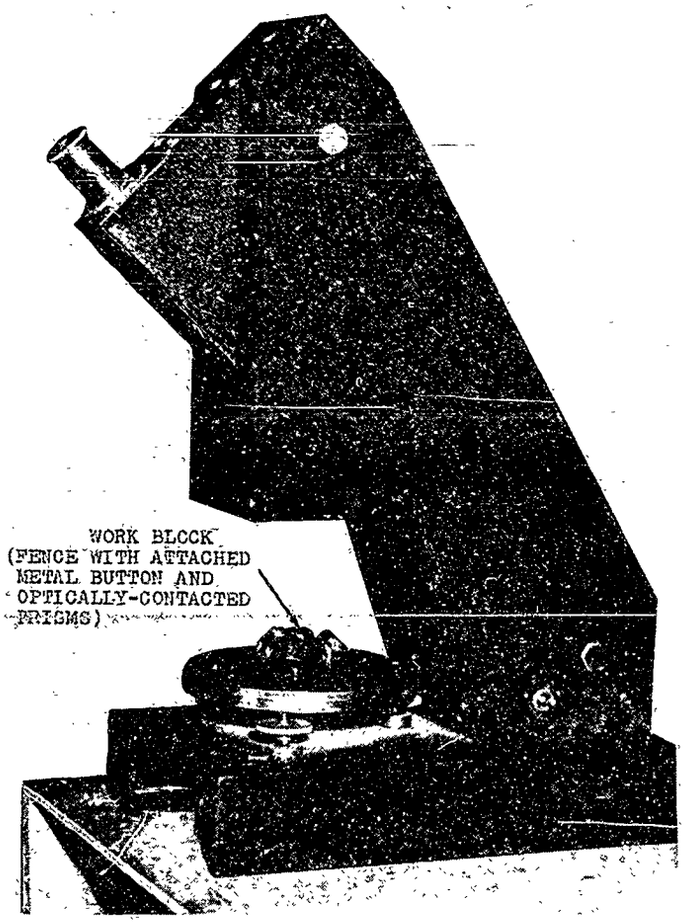

The Perkin-Elmer Corporation

Figure 1528.—Jackknife Autocollimator.

MECHANICAL CORRECTIONS

C. P. Goerz American Optical Company

It is not feasible to attach a prism blank to an ordinary blocking fixture for final polishing, although it would seem that such a fixture would lend itself to the polishing and correction of a blank as accurately as though it were held by hand. The reason for this is that when a prism blank is attached to an ordinary blocking fixture, the center of application of the applied forces is at some distance from the plane of the face being polished. This results in an unstable motion of the face over the surface of the polishing tool, with a resultant rounding of the face, or of chattering in the polishing motion.

To avoid these troubles and to permit the use of semi-skilled operators in correcting prisms, a blocking fixture in the form of 'gimbals' has been developed. The center of application of the forces applied by such a fixture to the work lies at the center of the gimbals, and since there is no physical obstruction there, it is possible to place the center of application of forces extremely close to the face being polished.

A view of a prism holder as part of a gimbals blocking fixture is shown in Figure 1531, and the necessary parts of a prism holder used to hold a roof angle prism are shown in Figure 1532. The ring and yoke are made in sizes to accommodate different holders. Two views of one holder are shown at (a) and (c), Figure 1532, a different one being necessary for each shape and size of prism. To prevent chips and scratches, felt lining is pasted on the surfaces touching the glass, except those containing soft-pointed screws. The prism blank is held in the holder lightly by the prism-retaining screws. The prism holders are held by the rods and adjusting nuts in the ring of the gimbals firmly, but so they can rotate freely without binding. These rods are also used for locating the prism blank in the proper position for removal of the glass from the desired area of the faces.

The complete unit is attached to the oscillating arm of a polishing machine so that the yoke remains in a position perpendicular to the polishing tool, as shown in Figure 1533. This arrangement permits the prism holder to assume freely any position with respect to the yoke. The mounting rod attached to the center of the yoke extends through a cylinder that contains ball bearings at the top and bottom. These ball bearings are approximately 3 inches apart, thus permitting freedom of motion and

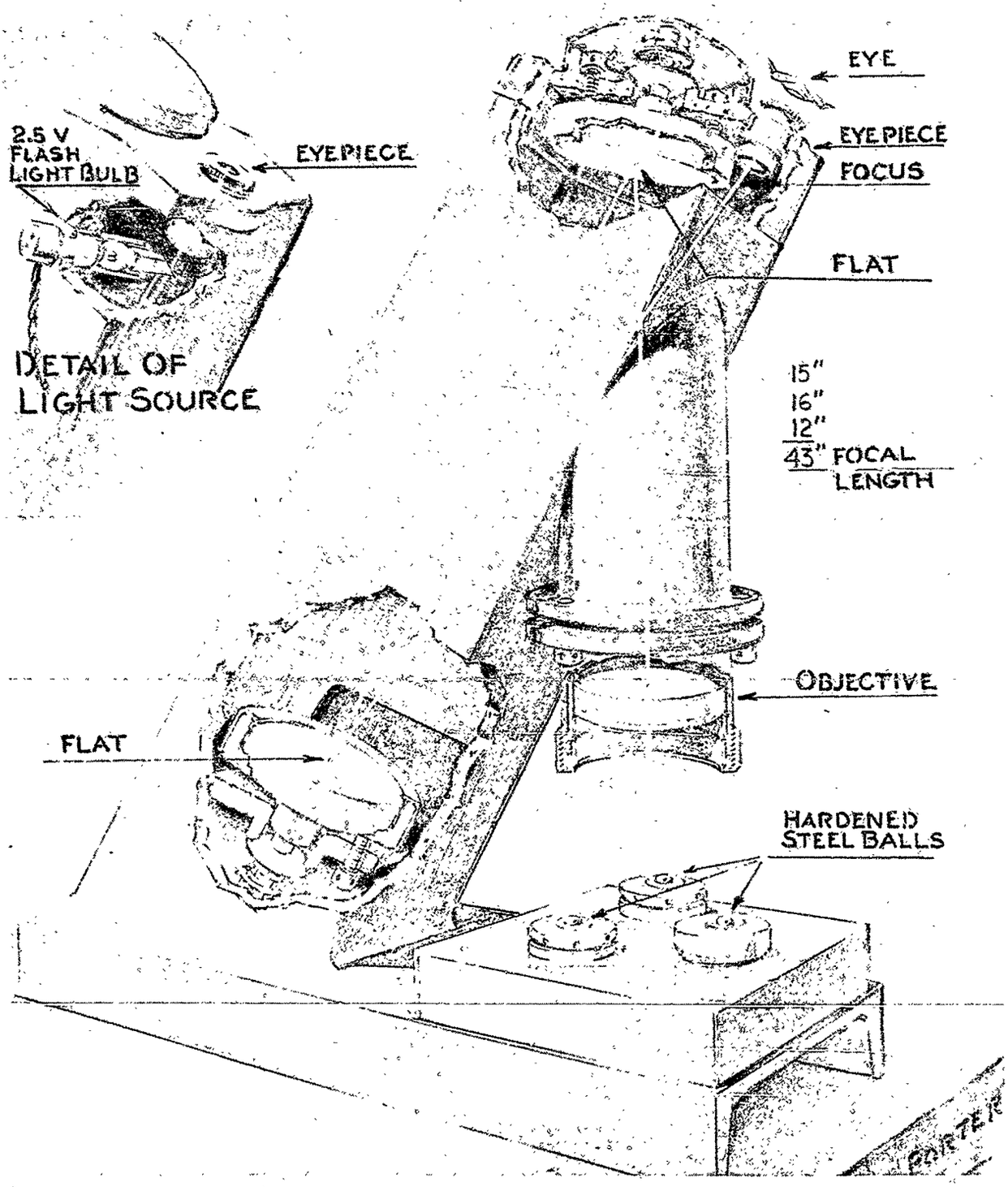

Drawing by Russell W. Porter

Figure 1529.—Cutaway View of Jackknife Autocollimator.

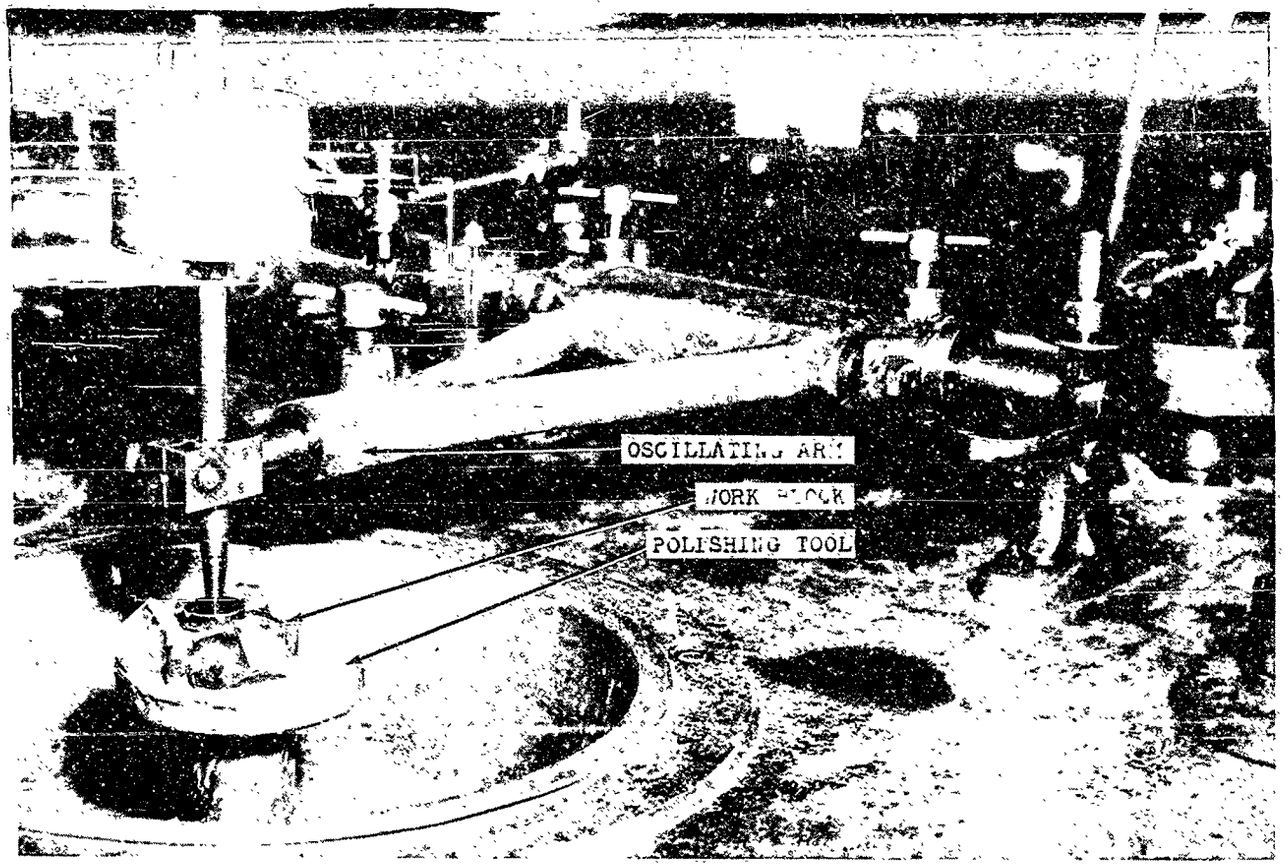

The Perkin-Elmer Corporation

Figure 1530.—Polishing a Block of Three Amici Prism Blanks on an Oscillating-arm Machine.
The setup for fine grinding uses a grinding tool instead of the polishing tool shown.

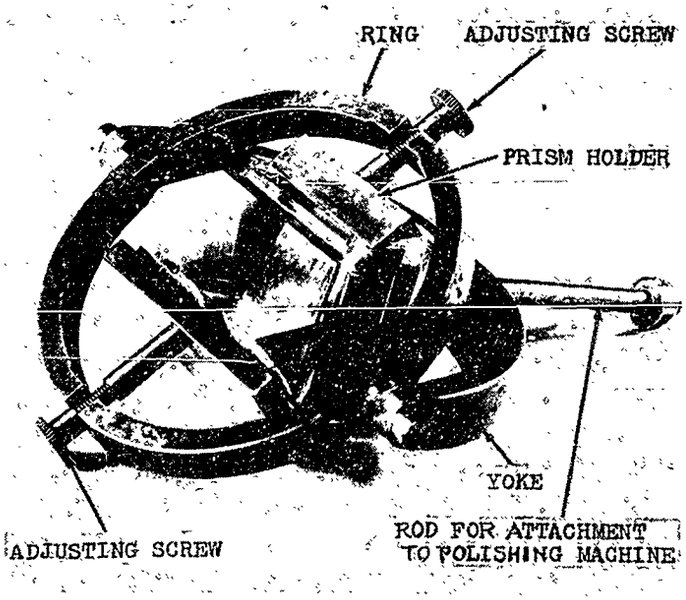

C. P. Goerz American Optical Company

Figure 1531.—Gimbals with Prism Holder Assembled.

at the same time maintaining a normal operating position. In order to polish more on one part of a prism-blank face than another, weights may be applied to pegs attached to the prism holder; or, by manipulation of the adjusting nuts, the holder may be moved with respect to the ring in such a way that the portion of the face to be polished away is moved closer to, or away from, the center of the gimbals.

In correcting prisms with a gimbals blocking fixture of this type, it has been found desirable to rotate polishing tools very slowly. A spindle speed of 2 to 3 rpm with an upper reciprocating member speed of 60 to 100 oscillations per minute has given satisfactory results. Hard pitch is used on the polishing tools in order to maintain a flat surface over a long period. Rouge or cerium oxide may be used as

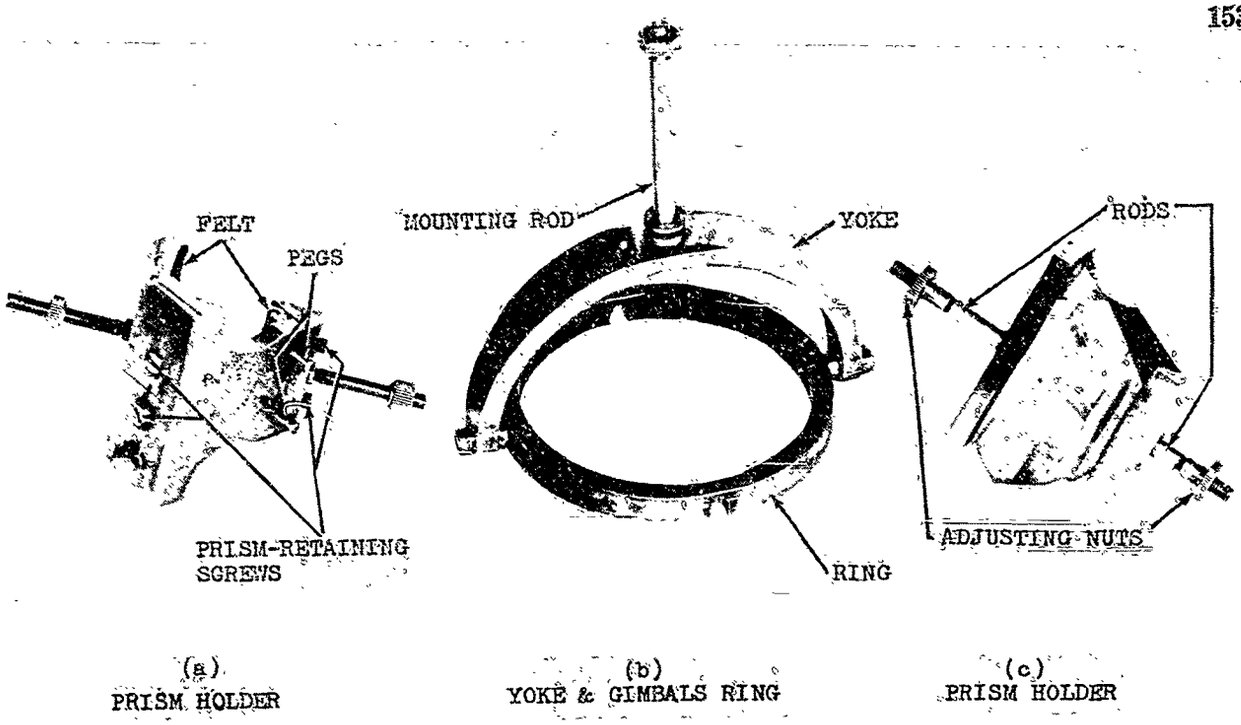

C. P. Goerz American Optical Company

Figure 1532.—Disassembled Gimbals Showing Holder for Correcting the Roof Angles of Amici Prisms.

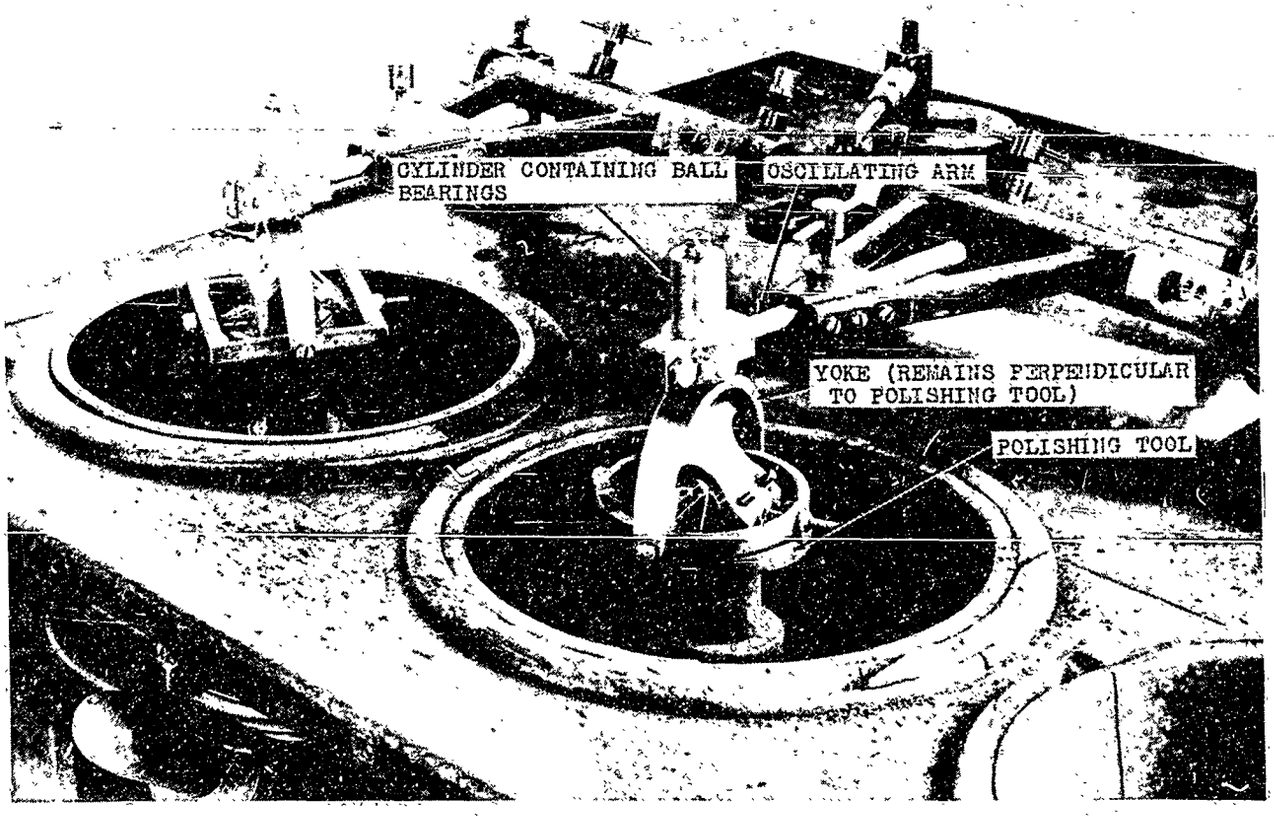

C. P. Goerz American Optical Company

Figure 1533.—Gimbals Holding Amici Prism in Position on a Polishing Machine for Correcting the Roof Angle.

the polishing medium. The polishing tool is corrected as described earlier in this chapter.

To test the prism, the prism holder with prism in place is removed from the ring by loosening the adjusting screws (Figure 1531) and then the holder is tilted to the proper angle to permit the light to enter a 90° face, thus allowing measurement of the roof angle.

To make a correction of the roof angle, the adjusting screws (Figure 1531) may be adjusted so as to permit that part of the face which requires extra polishing (positive or negative angle) to oscillate over the center of the polishing tool, or extra weights may be added to the pegs or to the lower prism-retaining screws (Figure 1532). It is preferable to make the angle changes by shifting the position of the prism rather than by adding weights, since the addition of weights disturbs the normal setup. (The normal setup is that combination of weights, oscillation and pitch mixture which will produce an evenly polished face.)

Other types of prisms, as well as roof prisms, may be corrected by this method, but each type requires a specially designed holder. Three of these holders are shown in Figure 1534, one designed to receive a penta prism, a similar one with a penta prism inserted, and another holder designed to mount a rhomboid prism.

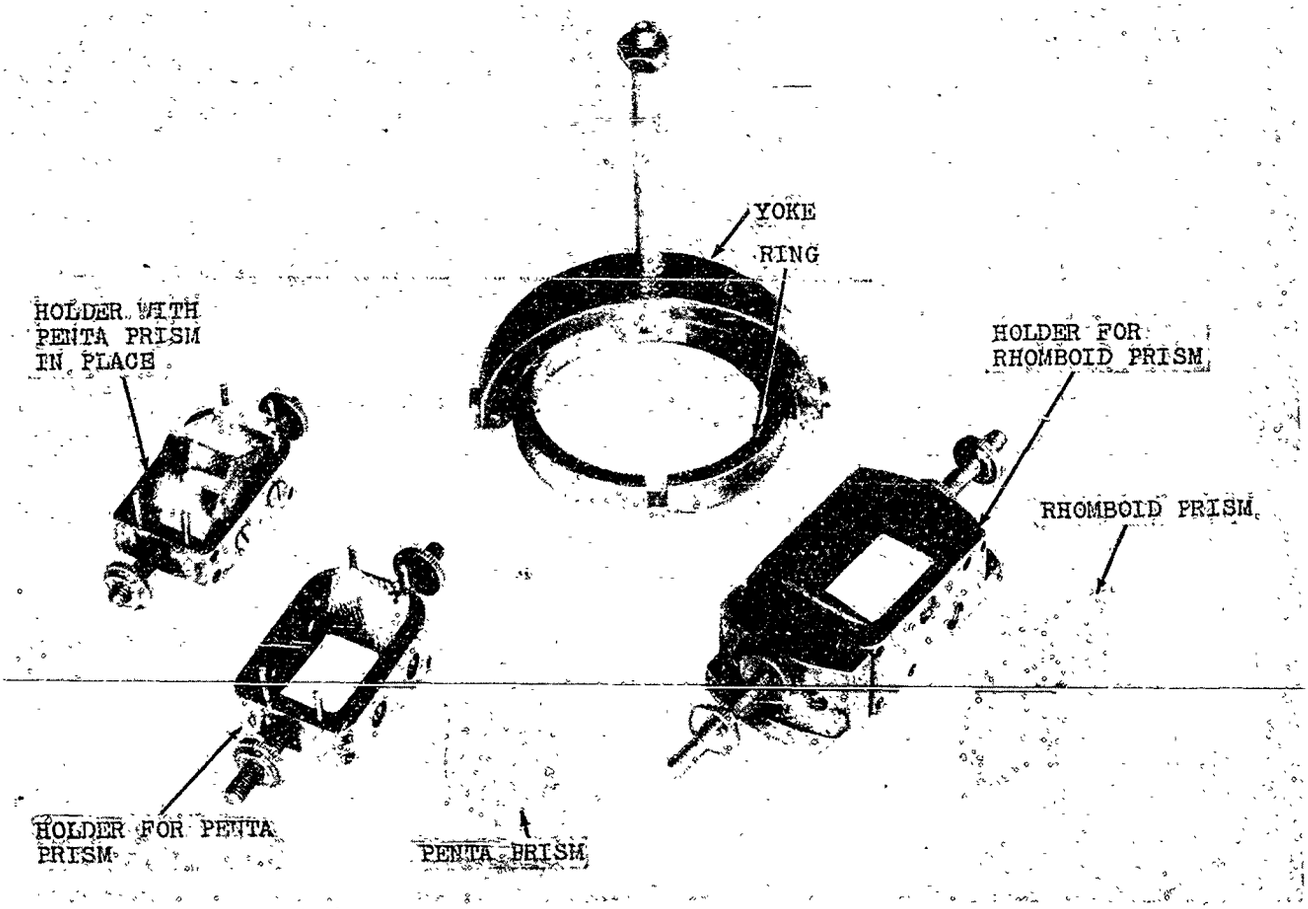

C. P. Goerz American Optical Company

Figure 1534.—Disassembled Gimbals Showing Two Types of Holders for Prisms Having No Roof.

CHAPTER 16

WEDGES, WINDOWS, AND MIRRORS

	Page No.
Wedges.	1602
Cemented Achromatic Wedge (Eastman Kodak Company).	1602
Grinding and Polishing.	1602
Correcting.	1602
Checking with Special Gage.	1602
Checking with an Autocollimator.	1603
Orienting in an Interferometer.	1603
Cementing.	1604
Final Processing.	1604
Large Circular Achromatic Wedge with Elements in Optical Contact (The Perkin–Elmer Corporation)	1604
Small Circular Wedge (The Perkin–Elmer Corporation).	1605
Windows and Mirrors.	1606
Naval Gun Factory.	1606
Rough Grinding.	1606
Blocking.	1606
Inspecting for Parallelism.	1608
After Fine Grinding.	1608
After Polishing.	1608

The accuracy required of certain optical elements, such as wedges, windows, mirrors, and optical flats, makes it necessary to use manufacturing methods which differ from those that are used ordinarily.

Precision methods that are used in processing such flatwork are discussed in this chapter, so as to avoid any confusion with the conventional methods, described in preceding chapters, which are not always suitable for high precision work.

Although the procedures discussed treat exclusively of wedges and windows, they may often be applied either wholly or in part, to similar elements requiring a comparable degree of accuracy.

WEDGES

While wedges, which have been described in Chapter 1, are usually circular in shape, (as shown in Figure 117), they may also be square or rectangular (see ocular "D," Figure 116). Where the angle of deviation is small, it is not usually necessary to compensate for chromatic aberration, but in the case of extremely precise wedges as described below, a crown and flint element may be matched to produce an achromatic doublet in much the same fashion as an achromatic lens.

Cemented Achromatic Wedge

(Eastman Kodak Company)

The achromatic ranging wedge used in the M1 height finder is composed of a crown and a flint element (each similar to the wedge shown in Figure 117), and each about 2½ inches in diameter. These elements are cemented together. The resultant deviation that is permissible in the achromatic doublet is 10 minutes ±0.2 second.

The method used in making these wedges is suitable for similar optical elements, such as windows, mirrors, and optical flats.

Grinding and Polishing.—Both crown and flint wedge blanks are placed on a plane blocking plate and the first face is fine ground and polished within a tolerance of 1 band. The wedge blanks are then removed from the plate, cleaned, beveled, and mounted in optical contact with an 8-inch diameter plane glass plate. Three flint or four crown wedge blanks are mounted on the plate at one time. A brass template is used to locate the blanks in approximately the same position on the plate so that later they may be gaged accurately. In the preliminary operations, the physical angle is controlled with an ordinary depth micrometer by measuring the thickness of the blanks across the block (see Figure 1601).

Correcting.—The final correction, which is to a tolerance of ±0.00015 inch, is made during the fine-grinding operation. To measure this tolerance accurately, use is made of a special tandem dial gage, consisting of two special depth gages, calibrated in 0.00008-inch graduations, placed 6 inches apart on a bar of tool steel and with their stems projecting through the bar (see Figure 1602). A semicircular stop, ¾ inch in diameter and ¼ inch thick is fastened to the underside of the bar with the flat side within ¼ inch of one of the gage stems. In addition, two pairs of ball points, the individual balls being 1 inch apart and the pairs about 4 inches apart, are placed on the underside of the bar and adjusted so that all four ball points are in the same plane.

Checking with Special Gage.—A convenient way to set the dial gages at zero is to place the four ball points (of the two pairs) on a plano-parallel plate of approximately the same

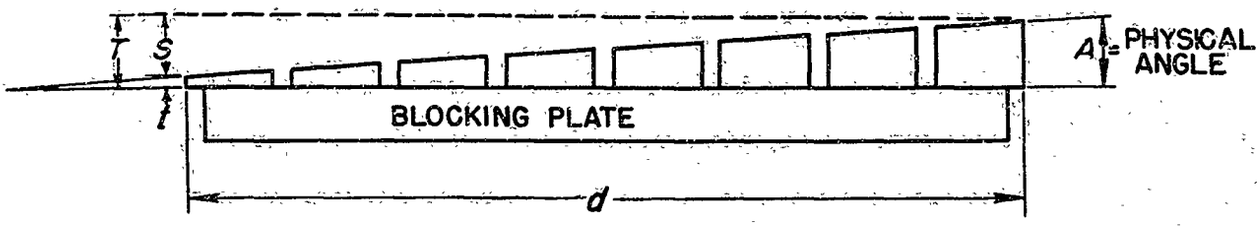

Figure 1601.—Wedge Block Showing Physical Angle (Exaggerated).

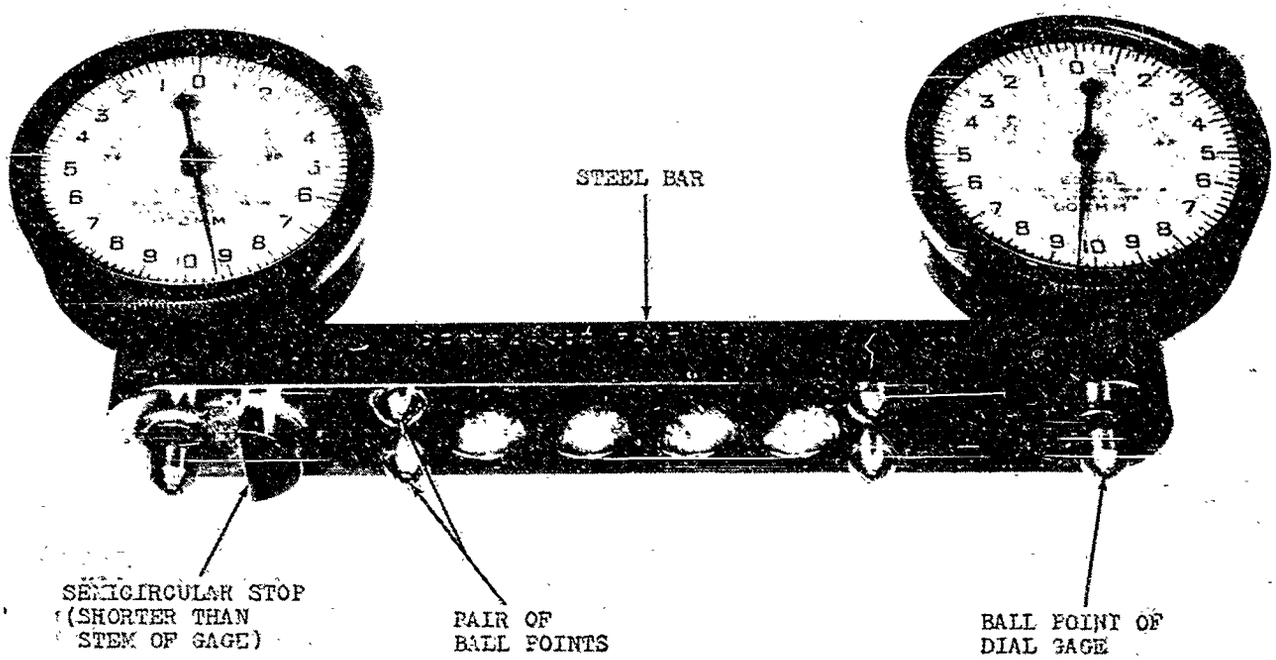

Eastman Kodak Company

Figure 1602.—Tandem-dial Gage for Checking the Physical Angle of a Wedge Block.

thickness as the maximum thickness of the elements, with this plate resting, in turn, on a plane surface. The ball points of the two gage stems should rest on the plane surface which supports the plano-parallel plate.

When gaging wedge blanks after the dial gages are set at zero, the difference in their readings (which is a measure of the physical angle, Figure 1601) is calculated. The physical angle may then be determined by trigonometry. Next the amount of material that must be removed from the work block may be computed by use of formula (13) if the exact distance between the two pairs of ball points is substituted for the quantity d.

When the gage is used, the semicircular stop is brought into contact with the edges of the two adjacent wedge blanks on the high or thick edge of the block. By this means any measurements taken on a particular block are always made from the same point. When gaging flint wedge blanks, where there are three on each block, each ball point of one pair rests on the face of an adjacent blank while both ball points of the other pair rest on the face of the third blank. When gaging crown wedge blanks, where four are on the block, each ball point of both pairs rests on the face of a different blank and hence the ball points are in contact with all four blanks. In either case, the two ball points of the gage stems rest on the surface of the blocking plate on which the wedge blanks are mounted.

Checking with an Autocollimator. — After the block is fine ground and polished to the desired physical wedge angle, as determined by the difference in the dial gage readings, and also to a satisfactory surface condition, the elements are removed, cleaned, and the actual deviation of each element is determined on an autocollimator by comparing it with a master element. Because of the method of cementing and adjusting as described below, the deviation of physical angles in individual elements can vary as much as 7 seconds. Such width of tolerance makes this method of manufacturing somewhat easier than those described earlier in the chapter.

Orienting in an Interferometer. — Before cementing, a crown and flint element of complementary deviation are selected and placed in a holding fixture with their thick edges 180° apart and with a very thin ring of glycerin or 'kodapak' separating them. This fixture is

placed in an interferometer which has been set previously to a master wedge that is known to be accurate within ±0.1 second. Then the elements are rotated until they make a minimum deviation in the interferometer, after which a pencil mark is placed on their edges to indicate their final relative positions.

Cementing. — After a pair of crown and flint elements has been oriented, the two elements are removed from the fixture, cleaned, cemented with butyl methacrylate, and lined up as closely as possible to the position marks on their edges. Then they are returned to the fixture, rechecked for alignment in the interferometer, and the entire assembly is placed in an oven to polymerize the cement. (See Chapter 20.)

Final Processing. — After polymerization has been completed, the doublets are again checked for deviation on the interferometer, and then rounded to the proper diameter, beveled, and given a final inspection.

This method of manufacture is particularly advantageous where large production is required. In the method first described, the doublet is held together by means of optical contact between the elements, both during the processing and, later, in the instrument itself. Skilled operators are needed to polish the contact faces to the high degree of flatness that is required to make the desired optical contact employed in the first method. In the second method, operators with a considerably lower degree of skill can be used, because the elements are cemented together and therefore need not be held to such close tolerance.

Large Circular Achromatic Wedge with Elements in Optical Contact

(The Perkin-Elmer Corporation)

The following is another method that is used for making the M1 height finder, achromatic, ranging wedge. This method differs from the one discussed earlier in that the elements are held together by optical contact. Since the manufacturing method is the same for both the crown and the flint elements, the following description will serve for either.

Due to the size of the wedge element, it is customary to process the blank singly. One face is rough ground on a mill and the blank is then edged round to the specified diameter on an edging machine. (This edging may be done as described in Chapter 13, except that no centering is required.) Next the other face is rough ground, the operator bearing on one side until the required angle and thickness have been reached. This can be determined by taking thickness readings by means of a gage at the thickest and thinnest points of the circumference. Now, the wedge blank is blocked to a brass hub that is about 1½ inches in diameter and which has a socket for the pin of the polishing machine. The blocking wax should be as soft as possible while still preventing any shifting of the wedge; *i.e.*, it should be about as hard as the polishing pitch. After this, the first face is fine ground to about 1 or 2 bands concave when tested with an optical flat, and then it is polished until it has a pattern of 3 or 4 bands convex and with no abrupt changes in curvature. The polishing tool should never be too wet, since otherwise it would polish too slowly, and it should never be absolutely dry, or an astigmatic surface might develop.

The polishing is finished on a polishing tool of about 3-inch diameter. Because the heat of polishing will cause the face to appear somewhat convex (perhaps ½ of a band) when the optical flat is first applied, the flat and the wedge element must be allowed to remain in contact for about an hour before a dependable reading of the curvature can be obtained. Ultimately, the face of the wedge must be flat within ⅕ of a band and the residual error must be marked on it.

When the first face has been finished, the hub is removed and transferred to the second face, taking care that there is absolutely no eccentricity detectable in the blocking since eccentricity will cause error in the angle of the blank and produce an astigmatic surface. Next the unfinished face is fine ground to the specified angle, which is checked from time to time by using an autocollimator (see Figures 1528 and 1529) calibrated with a 'master' wedge element. The master wedge element is laid on the three balls and then the table is tilted until a rotation of the element on the balls causes the image, which is reflected from the top face, to

move in an arc which passes through the cross-wire intersection. Then the blank being fine ground is substituted for the master wedge element; its arc will follow the same path when it has the same correct angle. When the angle of the blank is satisfactory, the face is polished in the same manner as the first face, but its residual error should be complementary to that of the first face, *i.e.*, if the first face is ⅕ band convex, the second face should be ⅕ band concave.

Next the crown and flint wedge elements are cleaned thoroughly, laid together, and rotated to the achromatic position. Now a plano-parallel glass plate is laid on the three balls of the autocollimator and the returning image is focused sharply, and without parallax, on the cross-wire intersection. Then a master achromatic wedge, known to have a deviation of 10 minutes ±0.1 second, is laid on a fixture between the plano-parallel glass plate and the autocollimator objective. This will throw the image out of the field of view; it must be brought back to the cross-wire intersection by tilting the table. Then the master wedge is replaced by the flint and crown elements laid together in the achromatic position. When plate, fixture, and elements are rotated as a unit, the returning image describes an arc which will pass through the cross-wire intersection provided the deviation is 10 minutes ±0.1 second. If a slight adjustment of the deviation is necessary, either or both the crown and flint elements are rotated through a small angle. When the deviation is correct, a pencil mark is made on the edges to indicate the final relative positions of the crown and flint elements.

Then the two elements are cleaned thoroughly again and put in optical contact, with their respective pencil marks lining up accurately. If care is taken in marking and contacting, the resulting achromatic wedge should be correct to ±0.25 second. (An achromatic wedge is formed when the crown and flint elements are contacted optically. Occasionally a finished wedge will exhibit lens power even though all the faces are accurate. In such cases the glass in one or both of the elements is not homogeneous, and the defective element (or elements) must be discarded.

Small Circular Wedge

(The Perkin-Elmer Corporation)

Because small wedge blanks must be blocked for grinding and polishing, they present a problem that does not arise in grinding and polishing large wedge blanks.

Small wedge blanks should be ground on a 4-inch diameter plano-parallel blocking plate. If an attempt is made to grind them to the required 'physical angle' (see Figure 1601) on a larger plate, too many of them will have an unsatisfactory thickness.

The physical angle to which the block of small wedge blanks must be ground to secure the desired angle of deviation may be calculated by using the following formula. (See Figure 1601.)

$$B = (n-1)A, \text{ or} \qquad (12)$$

$$A = \frac{B}{n-1}$$

where A = physical angle, in degrees
B = light deviation in degrees
n = refractive index of the glass
d = diameter of the block, in inches
s = amount to be ground from the block, in inches
$= T - t$

By trigonometry:

$$s = d \tan A$$

As an example, let us assume the following data:

$B = 12'\ 30''$
$n = 1.517$
$d = 4$ inches

Then, using formula (12):

$$A = \frac{12'\ 30''}{1.517-1} = 24'\ 11''$$

and, using formula (13):

$$s = 4 \tan 24'\ 11'' = 0.0282 \text{ inch}$$

While the angle that is obtained by formula (12) will not be exact, it will be close enough so that it can be observed in an autocollimator and thus make it possible to observe the progress of the necessary correcting which must subsequently be done by trial and error.

A 4-inch plano-parallel blocking plate is filled with blanks that are polished on one face and mounted in optical contact with the block. The work block is ground and polished until the height of the wedge elements at the thin edge of the block, measured from the bottom to the top face, is more than the corresponding height of the elements at the opposite block edge by an amount s sufficient to make the required physical angle A. In the example given above, the amount to be ground from the block is 0.0282 inch.

Now the block is examined in the autocollimator, the correction that must be made to the physical angle is estimated and the block is polished further.

When the polishing has been completed satisfactorily and no further correction is necessary, the block is used as a base to fine grind and polish other wedge blanks.

These succeeding blanks are first plaster blocked and polished on one side. Then they are placed in optical contact with the finished wedge elements, while the latter are still on the 4-inch plano-parallel blocking plate. After these latter blanks have been polished so that their top faces are plano-parallel, they are removed and any that fail to meet the required tolerance for thickness are discarded. This process is repeated until enough acceptable elements have been produced to fill a 6-inch or larger plano-parallel blocking plate. If desired, the original elements mounted on the 4-inch plano-parallel blocking plate may be used also.

Next, these elements, which can now be considered standard, are placed in optical contact on the larger plano-parallel blocking plate and further blanks with one side polished are put in optical contact on top of them. When this block has been ground and polished so the upper faces of the top elements are plano-parallel, the resultant elements will have the same physical angle as the standard elements.

The above process of grinding and polishing blanks mounted on the standard elements on the larger plano-parallel blocking plate may be repeated as often as desired. However, the faces of both the standard elements and the blanks must be very good or they cannot be placed in optical contact.

WINDOWS AND MIRRORS

Naval Gun Factory

Windows and mirrors which must be plano-parallel to within 5 seconds require the use of special fine-grinding and polishing processes not described in Chapter 11. In the description which follows, the word 'window' is used to account for both windows and mirrors, since both optical elements are basically the same.

Rough Grinding.—Window blanks are rough ground as described in Chapter 6 to within 0.020 inch of the desired finished thickness, and are then edged to size, a micrometer being used for testing parallelism.

Blocking.—An aluminum or cast-iron blocking plate and a glass blocking plate about 14 inches in diameter, which is flat to within ½ band, are required. The glass plate has parallel grooves ground into one surface; these grooves are about $3/16$-inch wide, 0.02-inch deep, and suitably spaced. These grooves are used for blocking and inspection purposes, as described later.

Since, in order to prevent warpage, as much as possible of both surfaces of the glass plate are needed to dissipate the heat that is generated during fine grinding and polishing, its ungrooved surface is mounted to the metal plate with wax pellets about ¾ inch in thickness. This leaves a space between the two plates for circulation of air and consequent dissipation of heat from the rear surface of the glass plate.

(Two alternate methods of mounting the glass plate would not prove satisfactory. If the ungrooved surface of the plate was waxed solidly to the metal plate, this surface could not dissipate its share of heat and the glass plate would tend to warp. A hub-mounted glass plate, on the other hand, would allow the dissipation of heat, but, due to the small diameter of the hub, it would not be sufficiently stable.)

When blocking the blanks either for first or second face fine grinding and polishing, the metal and glass blocking plate assembly is placed on a table with the grooved surface of the glass plate upward. Next, the glass plate and the window blank faces that are to be in contact are cleaned thoroughly with gauze soaked in alcohol, and then rubbed with a

chamois cloth. Finally, all lint and dust particles are removed with a camel's-hair brush. Use of this brush must be continued while the window blanks are being located on the glass blocking plate.

For first face fine grinding and polishing, the blanks are laid in place on the glass blocking plate. For second face fine grinding and polishing, the blanks must be pressed into optical contact with the plate. In mounting the second face in optical contact, the color should move away from the contacted surfaces and leave a clear area behind. If the color does not disappear, the blanks involved must be removed with heat or cold (*i.e.*, with any sudden change in temperature), the surfaces cleaned further, and another attempt made. If no color appears while the operator is endeavoring to make optical contact, then the presence of dirt on the surfaces may be indicated and a check should therefore be made.

In case of either first or second face mounting, the blanks should be located approximately square with relation to the grooves in the plate (see Figure 1603).

After all blanks have been mounted, whether merely laid on the plate for fine grinding and polishing of the first face or contacted optically for fine grinding and polishing of the second

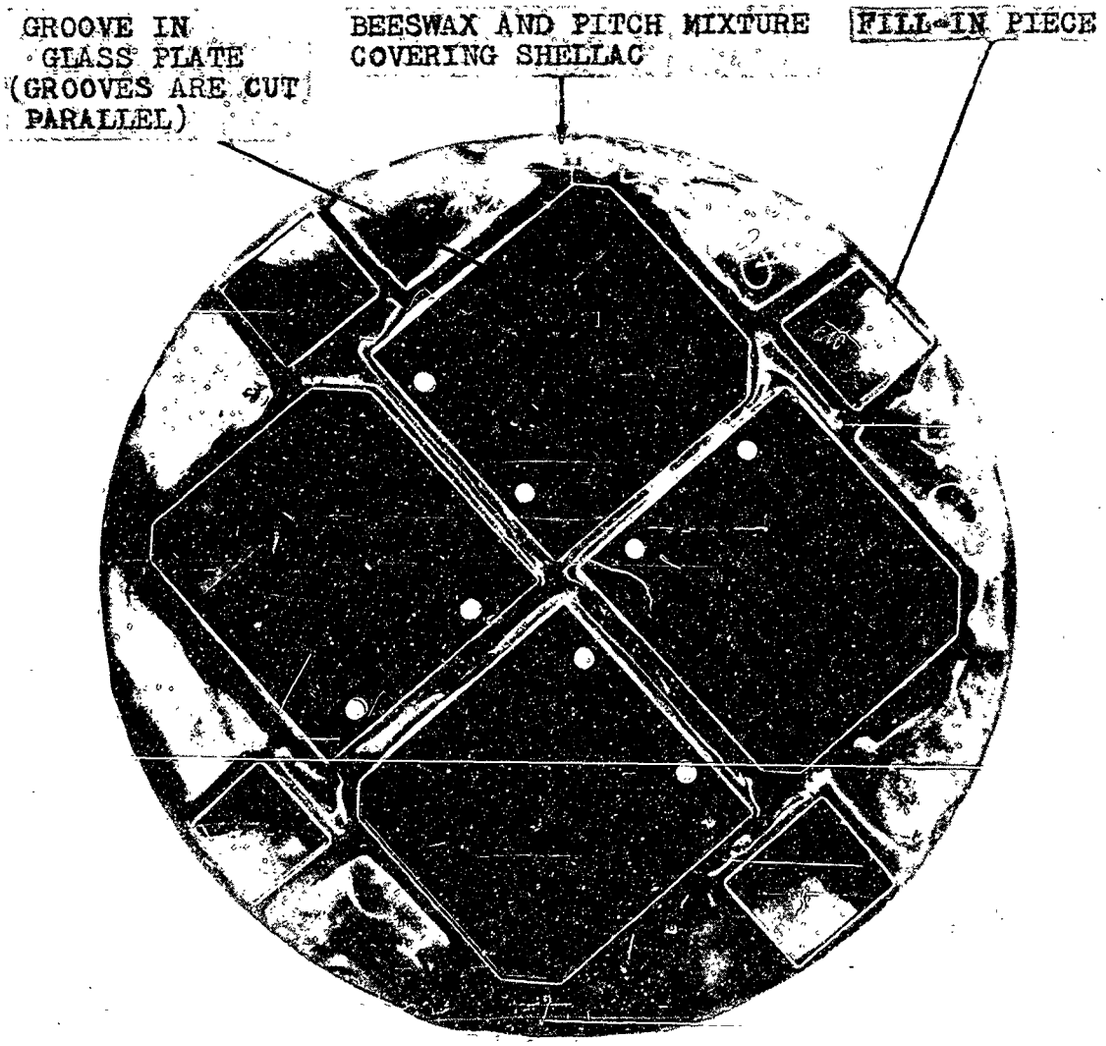

Naval Gun Factory

Figure 1603.—Windows in Optical Contact with Glass Blocking Plate After Precision Fine Grinding and Polishing.

face, the entire block is waterproofed by applying shellac around the bases of the blanks and then by covering the shellac with a warm mixture of beeswax and pitch. (Adhesion of the blanks caused by the shellac, beeswax and pitch is sufficient to hold them in place for fine grinding and polishing of the first face.)

Inspecting for Parallelism. *After Fine Grinding.* — After fine grinding the blanks plane and parallel by hand, their thickness should be measured. If the variation in thickness from one edge of the block to the other is no more than 0.0001 inch and if a 14-inch-diameter blocking plate is being used, the faces of the blanks are parallel to within 1½ seconds.

After Polishing.—After polishing, any variation in the thickness of a window can be measured, without removing it from the block, by using a modified form of the interferometer which will allow the observation of 'Haidinger fringes'.* The optical system of such an instrument is shown in Figure 1604 and this interference phenomenon can be used to measure variations in the thickness of a glass plate. The rings are formed at infinity and may therefore be seen with the naked eye or with a telescope focused at infinity, no condensing lens or other auxiliary system being needed.

The source of light for the interferometer is a low-pressure mercury-vapor lamp approximately 6 feet above the bench. The light from this lamp is reflected twice and then goes to the window being inspected. The window, which is still mounted on the block, is positioned so that the light passes through it into the groove in the top of the glass blocking plate as shown in Figure 1604 and is then reflected back to the eyehole in the second mirror.

To measure the parallelism of the two faces of the window, the inspector looks through the eyehole of the second mirror where he will see annular light and dark rings in the field. Then he moves the block with the window across the field, taking care to keep the annular rings (Haidinger fringes) against the light background of the grooves ground in the block. If the window increases in thickness as it is moved along under the eye, the annular rings will increase in radius and new rings will form in the center. If the thickness decreases, the annular rings will decrease in radius and some will disappear at the center. Every time a dark band completely replaces the preceding dark band (a difference in phase of 1 wave length), the thickness of the window has changed an amount equal to ½ wave length of light. The total amount of this change may be determined most easily by counting the bands which appear (or disappear) at the edge of the black

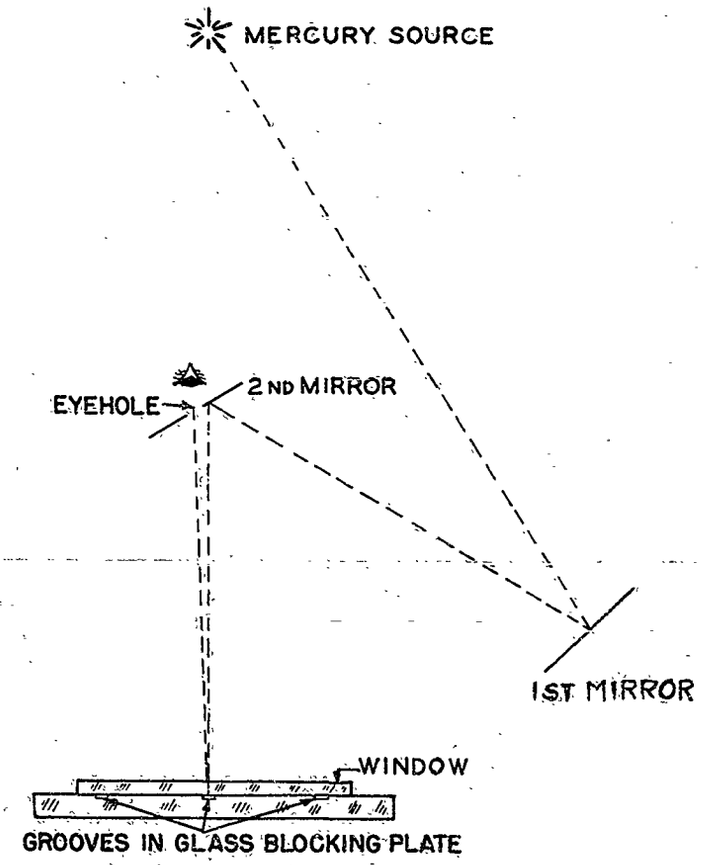

Figure 1604.—Optical System of a Modified Form of Interferometer Used for Inspecting Blocked Windows for Parallelism.

*Strong, John W. *Procedures in Experimental Physics.* p. 66 New York: Prentice-Hall, 1943

center of the image that is formed by the eyehole in the second mirror, as the window is checked across its entire surface.

The overall change in thickness of a window may be expressed as a wedge angle by the formula:

$$W = 206{,}265 \times \frac{\lambda}{2}\frac{N}{l} \qquad (14)$$

where W = wedge angle (= physical angle), in seconds

λ = wave length of light used, in inches

N = number of black (or white) bands appearing (or disappearing) at the center of the ring system

l = length of the plate traversed by the image in inches

The amount of material to be removed from the window can now be computed from formula (13) using l from formula (14) = d.

CHAPTER 17

ETCHING RETICLES

	Page No.
Mechanical Engraving.	1703
Applying the Resist.	1703
Immersion Method (Frankford Arsenal).	1703
Spinning Method (Eastman Kodak Company).	1705
The Engraving Tool.	1707
Steel.	1708
Diamond.	1709
Pantograph Engraving Method.	1709
Making the Template.	1709
The Rider.	1710
Engraving the Blank Reticle.	1711
Multiple-tool Engraving Machines.	1713
Frankford Arsenal.	1713
Eastman Kodak Company.	1713
Single-tool Engraving Machines.	1713
George Gorton Machine Company.	1713
Crossline Engraving Method.	1713
Crossline Engraving Machines.	1715
Naval Gun Factory (Universal Ruling Instrument).	1715
Eastman Kodak Company.	1716
Photographic Engraving.	1717
Using a Metallic Resist (Minneapolis-Honeywell Regulator Company)	1717
Mounting on Silvering Disk.	1717
Preparing the Silvering Solutions.	1718
Silver-bearing Solution.	1719
Reducing Solution.	1720
Silver Coating.	1720
Removing from Silvering Disk.	1721
Polishing.	1723

CHAPTER 17

ETCHING RETICLES

	Page No.
Mechanical Engraving.	1703
Applying the Resist.	1703
Immersion Method (Frankford Arsenal).	1703
Spinning Method (Eastman Kodak Company).	1705
The Engraving Tool.	1707
Steel.	1708
Diamond.	1709
Pantograph Engraving Method.	1709
Making the Template.	1709
The Rider.	1710
Engraving the Blank Reticle.	1711
Multiple-tool Engraving Machines.	1713
Frankford Arsenal.	1713
Eastman Kodak Company.	1713
Single-tool Engraving Machines.	1713
George Gorton Machine Company.	1713
Crossline Engraving Method.	1713
Crossline Engraving Machines.	1715
Naval Gun Factory (Universal Ruling Instrument).	1715
Eastman Kodak Company.	1716
Photographic Engraving.	1717
Using a Metallic Resist (Minneapolis-Honeywell Regulator Company)	1717
Mounting on Silvering Disk.	1717
Preparing the Silvering Solutions.	1718
Silver-bearing Solution.	1719
Reducing Solution.	1720
Silver Coating.	1720
Removing from Silvering Disk.	1721
Polishing.	1723

	Page No.
Photographic Sensitive Coating.	1723
Exposing.	1723
Developing.	1723
Removing the Visible Silver.	1723
Touching Up.	1724
Using a Non-metallic Resist.	1725
Etching.	1725
Frankford Arsenal.	1728
Removing the Resist.	1728
Filling.	1728
Minneapolis–Honeywell Regulator Company.	1730
Non-etching Method of Applying Reticle Patterns.	1731

A reticle (see Chapter 1) is that element of an optical system which contains the pattern of lines by which distances are computed, fire is directed, and comparative locations are plotted. The particular pattern depends on the purpose for which it is to be used, and may consist of straight lines, parallel lines, cross lines, circles, designs of planes, tanks, and other equipment arranged singly or in many combinations. (Figure 118 shows a few samples of such patterns.)

The lines of the pattern—which must be of a definite width and length, be spaced accurately, and have a sharp outline—are placed on a blank reticle of suitable size and shape.

The pattern may be put on the blank by etching with hydrofluoric acid applied through lines cut in a layer of acid-resistant wax, by photographic processes, or by a combination of both. If necessary, the lines are filled with an opaque pigment to make them more clearly visible when in use.

While most reticles are circular as shown in Figure 118, the design of certain optical systems is such that noncircular shapes are required, *e.g.*, the half-round or 'tombstone' shape shown in Figure 118-D, or the rectangular slab shown in Figure 116.

MECHANICAL ENGRAVING

In the mechanical engraving process, the blank reticle is coated with a thin layer of acid-resistant wax, called the 'resist'. Then the desired pattern is cut in the wax resist with a sharp tool, taking care that the lines are clean, have straight edges, and are of the proper width. Next, in the etching process, the blank reticle is exposed to the fumes of hydrofluoric acid, or to the acid itself. In this operation, the fumes (or the acid itself) attack the glass that is not covered by the resist and 'etch' grooves in it to a depth determined by the time that the contact with the glass endures. After this, the blank reticle is washed thoroughly to remove all traces of acid, the resist is removed and the blank is cleaned. Finally, the etched lines may be filled with an opaque pigment of the desired kind mixed with an adhesive. This is allowed to harden, and then the reticle is cleaned and given a final inspection.

Applying the Resist

Immersion Method (Frankford Arsenal).—The blank reticles are placed on a paper-covered plate of glass, metal, plywood, or other suitable material about 6 x 8 inches and about ¼-inch thick, and with the faces of the blank reticles that are to be coated in contact with the paper.

Next the reticle holders (see Figures 1701 and 1702) are placed over the blanks, and the plate is put into an electrically heated oven. Then, after being heated to a temperature of approximately 115°F., the plate is removed from the oven and molten beeswax is poured into the cup-like opening in the back of each holder. When the wax has set it will hold the blank reticle securely in the holder.

If the beeswax is too hot, it will seep through the small space between the blank and holder or run out the drilled and tapped hole in the holder which is used for the handle. Next the plate of prepared blanks is returned to the oven. When a temperature of 115°F. has again been reached, a holder with its blank is removed, the face is cleaned with a soft cloth or a camel's-hair brush, and a reticle holder-rod or handle is screwed in the drilled and tapped hole.

Now the entire unit of blank, holder, and beeswax is immersed in the fluid resist, allowed to remain quiet for several seconds and then withdrawn at a slow, uniform rate and at an angle of approximately 30° between the surface of the resist and the blank.

To assure a coat that is smooth and uniform in thickness, the withdrawal must be steady; and to prevent any dust particles or foreign matter from adhering to the coat, the blank must be withdrawn face downward. The nature of the coat which can be applied successfully by this method is determined by the rate of withdrawal. If the blank is withdrawn too fast, the coat will be thick but too rough. If it is withdrawn too slowly, the coat will be smooth but too thin. Therefore, the rate of withdrawal must be regulated between these two extremes, by experiment or as a result of experience, so as to obtain the most desirable combination of thickness and smoothness.

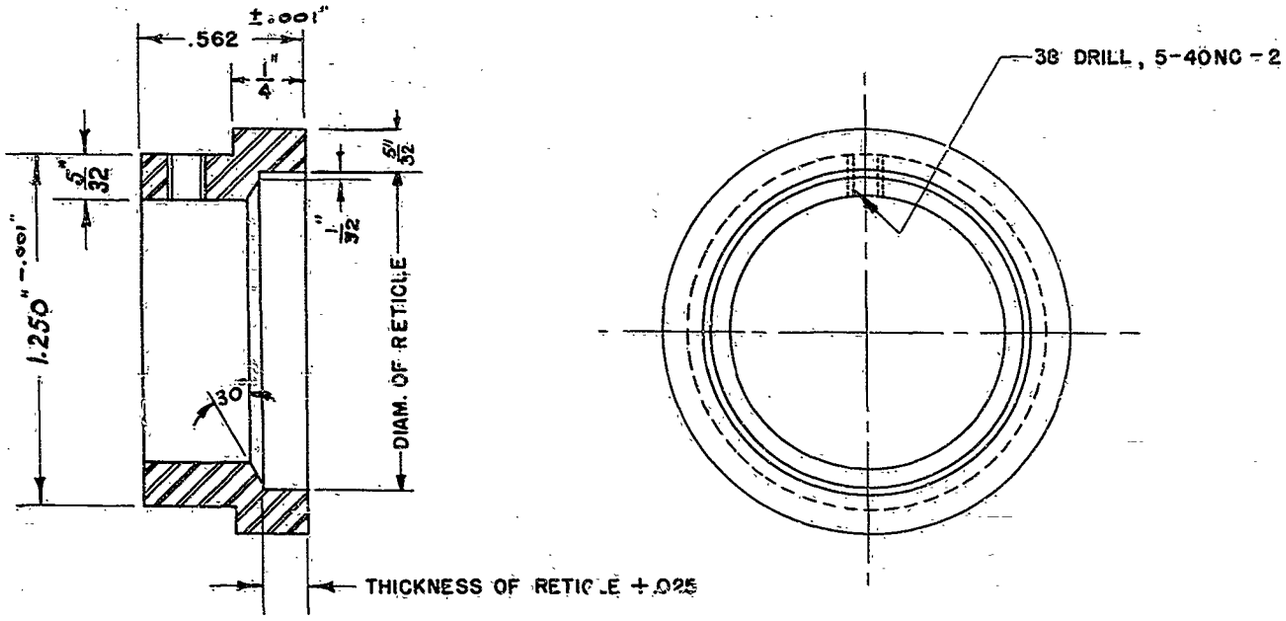

Figure 1701.—Holder for Reticles 1 Inch or More in Diameter.

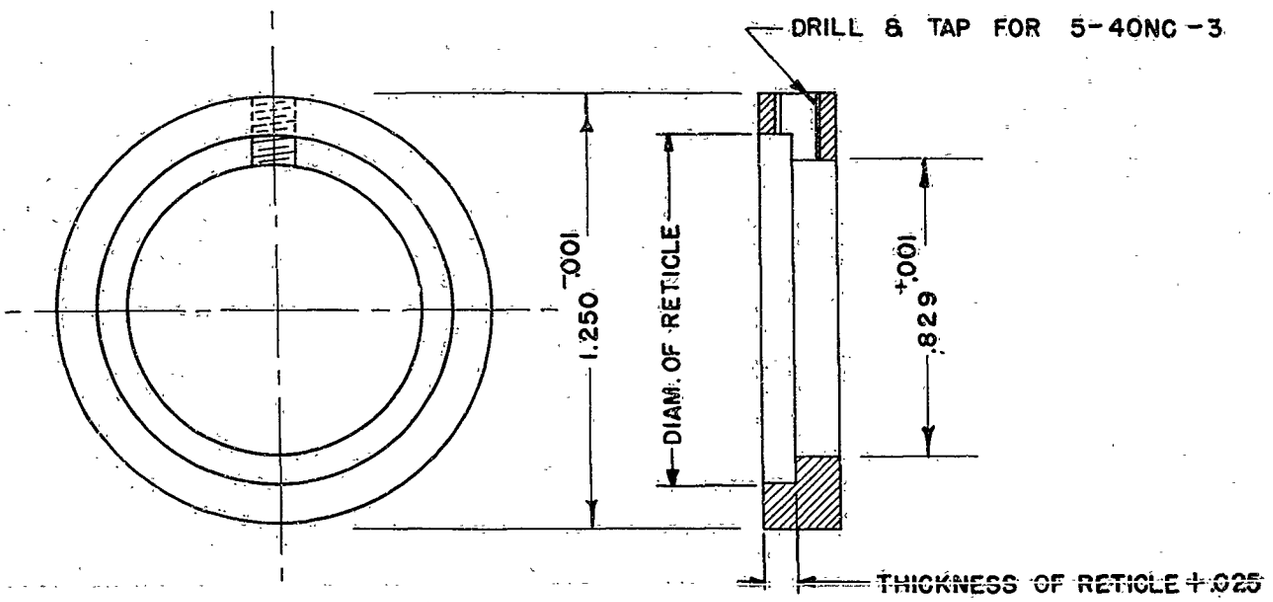

Figure 1702.—Holder for Reticles Less than 1 Inch in Diameter.

Narrow lines (0.0006-inch wide) can be etched readily with hydrofluoric acid fumes, and therefore, a fairly thin film is sufficient. But wide lines require etching with liquid acid, and therefore, a heavier coat of resist is required.

As soon as the application has been completed, all excess resist should be cleaned from the holder. This is usually done with a cloth, saturated with gasoline or xylol.

It is advisable to let the resist 'age' for a period of not less than 1 hour before attempting to engrave through it. On the other hand, if it sets more than 24 hours, even under ideal conditions, the coat should be removed and a new one applied.

Spinning Method (Eastman Kodak Company).—The spinning method, used for circular blank reticles, makes use of a brass-ring reticle holder (see Figure 1703). The blank reticle is mounted in this holder in a manner similar to that described above.

The spinning machine contains a vertical spindle which is driven by an electric motor at either 900 or 1800 rpm, and is controlled by a foot switch. The spindle is surrounded by a metal pan to collect any excess resist or cleaning solvent. A chuck is provided for holding the brass ring with its blank reticle on top of the spindle, and a vacuum duct for the removal of fumes is abutted against the metal pan.

To clean the face of the blank previous to coating, a small stream of chloroform is directed at its center for about 2 seconds as it is being spun on the machine. A cotton swab soaked in chloroform is then used to remove any specks that remain.

During the application of the coat, the temperature of the blank should be slightly above that of the resist, and the latter should be kept at 110 to 120°F. If the blank is ¾ inch or smaller, machine speed is regulated to 1800 rpm; if more than ¾ inch, a machine speed of 900 rpm is maintained. After cleaning, ¼ to ½ cubic centimeter of the resist is dropped through a glass tube onto the center of the spinning blank, as shown in Figure 1704. After the coat of resist appears to be dry (which should require about 3 seconds), and with the blank reticle still spinning, a second coat is applied in the same manner. If necessary, a third coat may be applied when the second has dried.

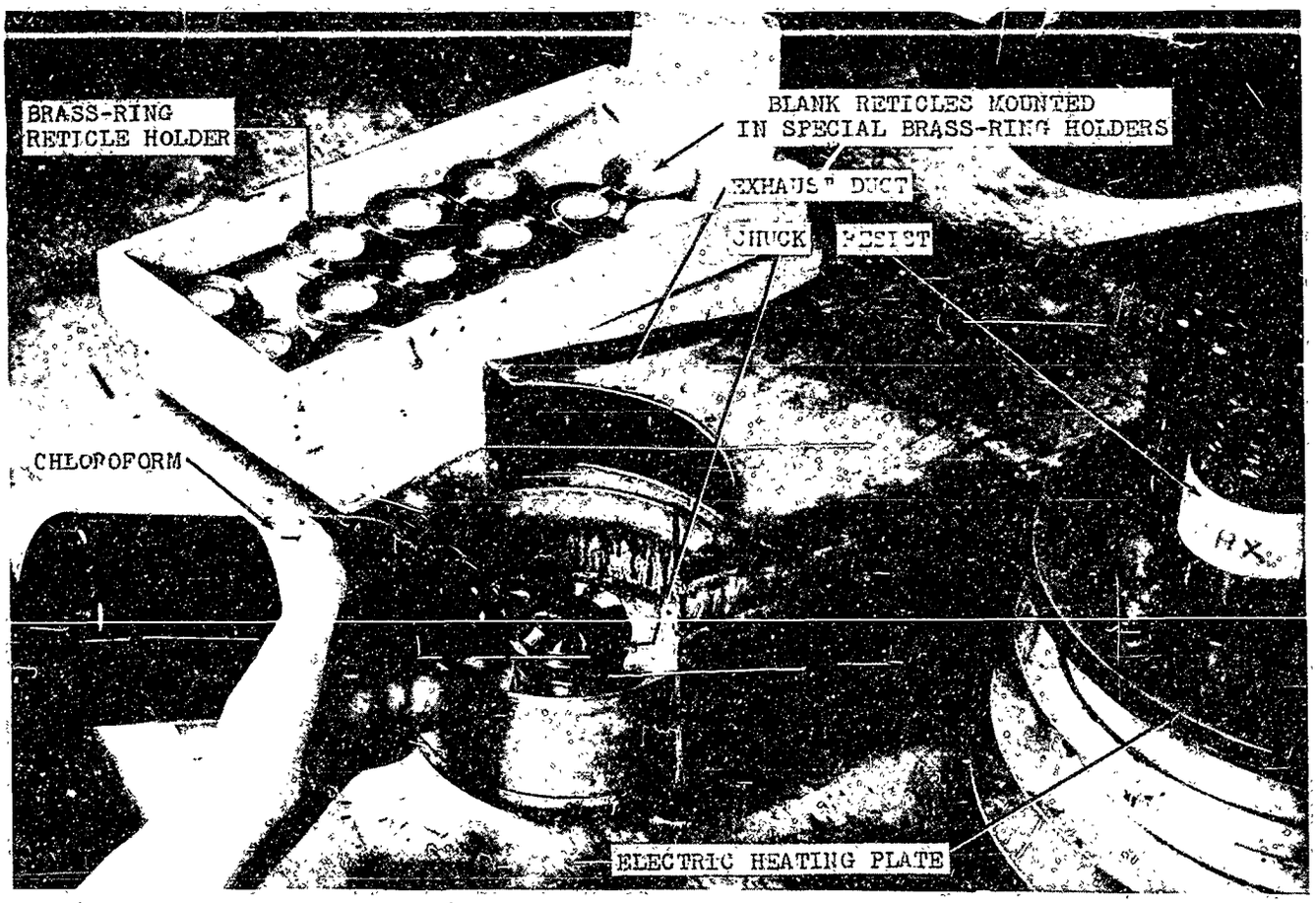

Eastman Kodak Company

Figure 1703.—Cleaning Spinning Reticles with Chloroform.

Eastman Kodak Company

Figure 1704.—Coating Spinning Reticle with Wax.

When a sufficient number of coats have been applied, a cloth pad, soaked with a small amount of chloroform or gasoline, is held against the edge of the brass-ring holder as the foot switch is released, thus stopping the spinning motion and, at the same time, cleaning excess resist from the edge.

The finished coat is inspected for obvious holes or dust specks while still in the chuck and, if satisfactory, is removed from the chuck and held against a bright light for further examination.

A brass holder for coating square blank reticles by the spinning method is shown in Figure 1705. An aligning block is used to make sure that the edges of the blank are flush with the holder, and the blank is held against the notch in the holder by a temporary clamp. The surface of the holder that contacts the rear face of the blank is cut away about 0.010 inch so as to permit the rear face of the blank to be contacted near the edges only, and thus provide a space for the melted wax to flow in. After the blank is clamped in position, the assembly is heated, and melted beeswax is flowed in between the rear face of the blank and the mount. When the wax hardens and holds the glass in place, the clamp is removed. The assembly is then placed in a special chuck with an opening of the proper shape, and the front face of the blank is then coated by the spinning method, as described above.

The Engraving Tool

The engraving tool is used with an engraving machine for cutting lines in the resist so

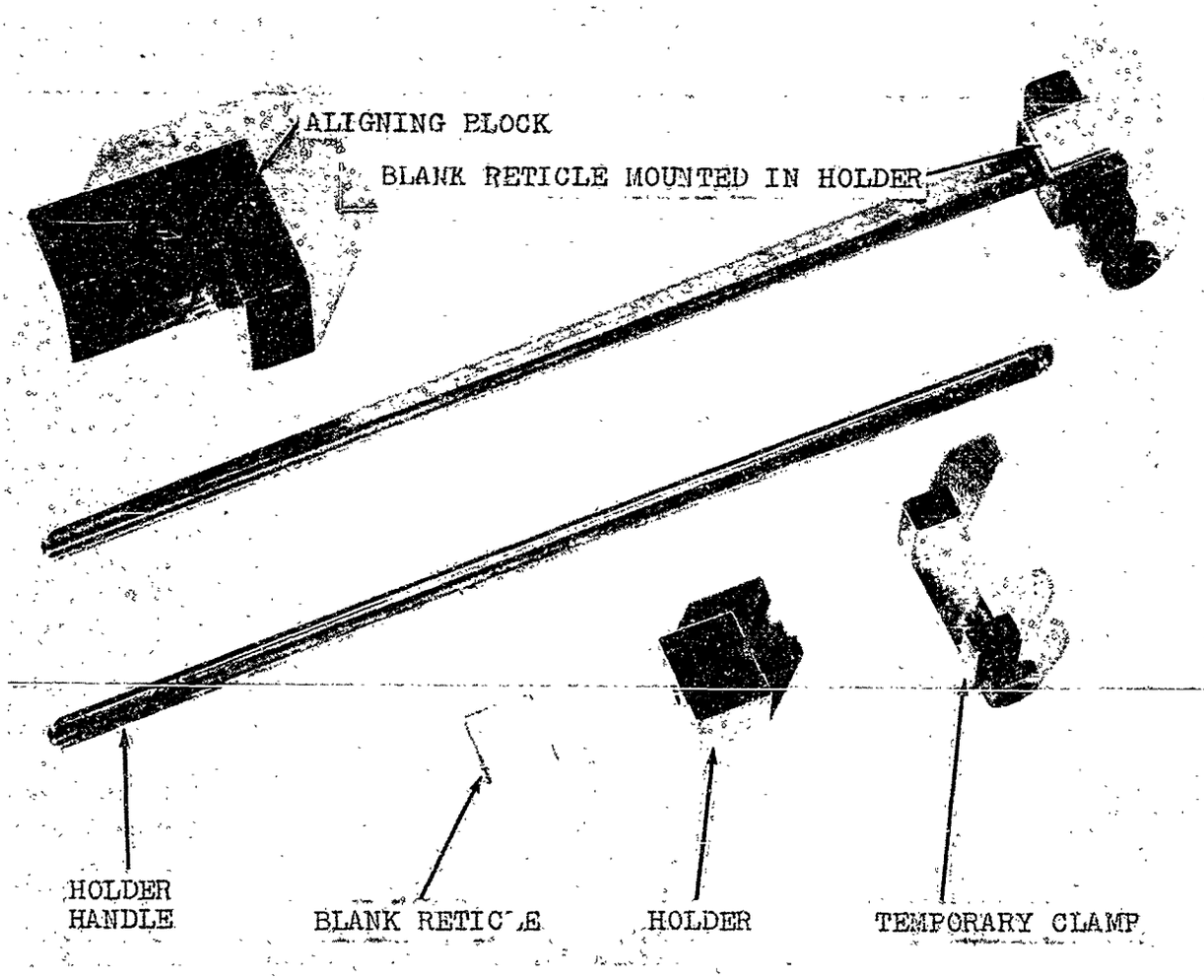

Eastman Kodak Company

Figure 1705.—Holder for Mounting Square Blank Reticles.

as to make the desired pattern for the reticle. (A cross-section of an engraving tool in a special holder is shown in Figure 1706.)

Engraving tools are made from a variety of materials and are of many shapes, depending on the type of line desired and the tolerance that must be held. Tools made of steel and, to a lesser extent, those made of diamond are most universally used in high precision work.

Steel.—When the line is narrow, the tolerance close, and the same width must be held during the engraving of a large number of lines, a special alloy steel is a good material to provide the hard, strong point required. The steel for this type of tool must be such that it can be ground to a sharp point without breaking, chipping, or fracturing. (One steel alloy that is satisfactory for this duty is made by the Firth–Sterling Steel Company of McKeesport, Pennsylvania, and is known as 'grade HA firthite'. See Figure 1707.)

Actual shapes of engraving tool points vary considerably, depending on the size line desired and the direction of cutting motion, but four fundamental shapes may be noted as the basic types, *i.e.*, (1) conical point, (2) chisel point, (3) pyramidal point and, (4) V-point.

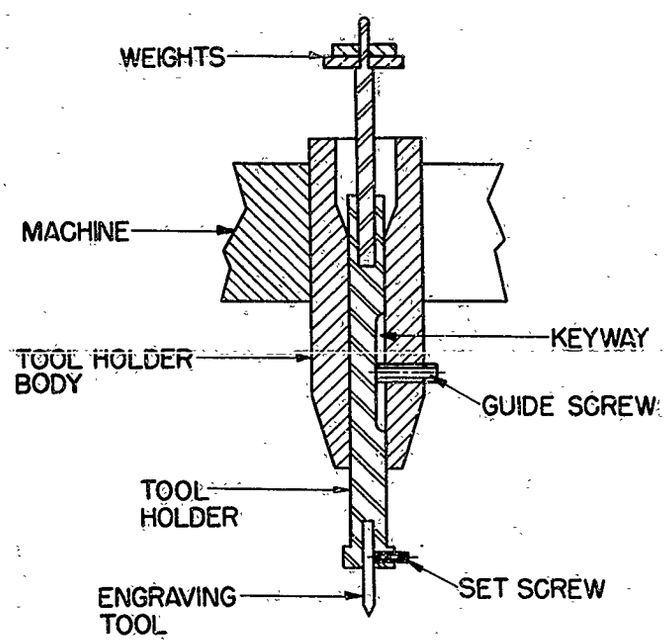

Figure 1706.—Cross-section View of Engraving Tool and Holder.

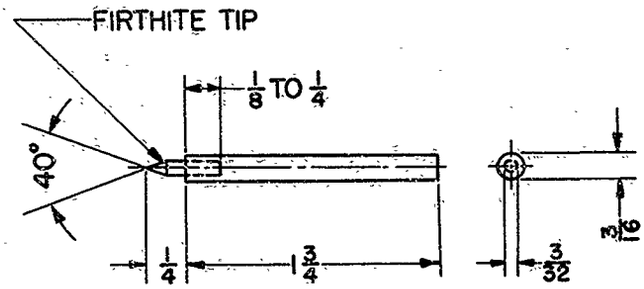

Figure 1707.—Engraving Tool.

The conical point is very versatile, being capable of cutting lines in any direction, in widths varying from approximately 0.0001 to 0.002 inch. When lines of more than 0.002-inch width are desired, a chisel-point engraving tool may be used. (A square point is a variation of a chisel point sometimes employed.) Due to the greater width of this type of point, hardened steel drill rod-stock is suitable for its construction. When lines of different widths are desired in two directions, one way to cut them is to use an engraving tool with a pyramidal point. The different widths obtainable from the same pyramidal point are made possible by grinding two adjacent faces deeper than the third face. When fine lines (as small as 0.0002 inch) are desired in one direction only, a V-point similar in shape to a V-thread cutting tool may also be used.

Grinding of engraving-tool points may be accomplished on a watchmaker's lathe, equipped with a compound tool rest, as shown in Figure 1708. The engraving tool is held in the head stock of the lathe by a spring collet, and the wheel—which is preferably a resinoid-bonded, 500-grit, 100-concentration diamond wheel—is mounted on the tool rest and set at the required angle. When grinding conical points, the lathe is driven at approximately 600 rpm, and the diamond wheel at from 4000 to 5000 surface feet per minute. When grinding other types of points, the head stock of the lathe is locked in position and the rotating diamond wheel is moved as required.

After grinding, the final finish may be given to engraving-tool points by honing with a fine Arkansas oil stone. In all cases, the condition of the point is checked during grinding and honing by means of a micrometer microscope.

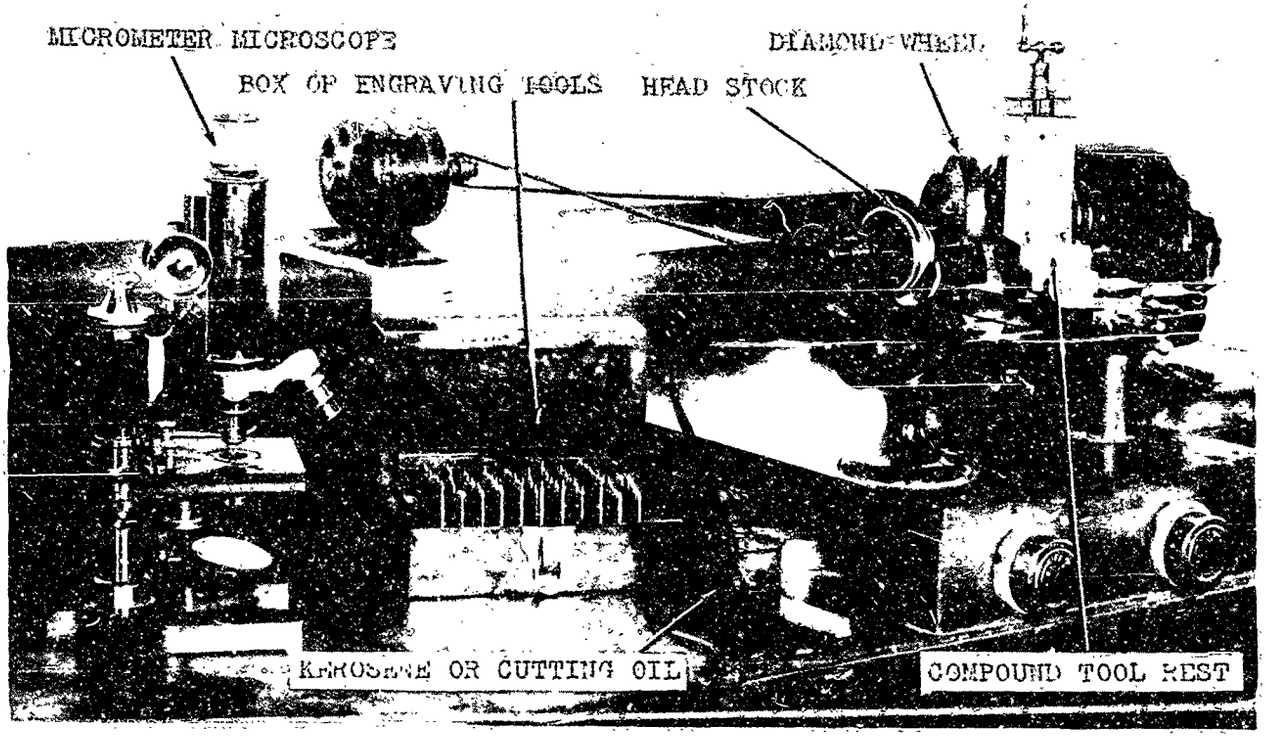

Figure 1708.—Arrangement for Grinding Engraving Tool and Stylus.

If it is necessary to increase the width of the point of the engraving tool, it can be done while the tool is mounted in an engraving machine (operation of these machines is described later in this chapter), by lapping it lightly on a glass plate, the surface of which is coated with a paste of levigated alumina and lard oil. To accomplish this operation, the paste-covered glass plate is inserted in the position to be occupied by a blank reticle during the engraving operation. It is important that the surface of the glass plate occupies the same plane that the face of the blank reticle does when it is mounted on the stage of the machine. The engraving tool is brought into contact with the glass very slowly, care being taken that it just touches the surface, then the engraving tool is given a circular motion which will rub the point of the tool on the glass surface and dull it slightly. To determine the progress of the operation the lapping is stopped, trial lines are made, and these lines checked for size with a micrometer microscope or a comparator.

Diamond.—The usual width of the lines that are ruled on reticles varies from 0.0003 to 0.006 inch. In special cases lines as small as 0.0001 inch are required. While steel engraving tools have been found satisfactory for all these widths, some manufacturers prefer to use a diamond tool for cutting the narrower lines. Diamond tools are not uniform and each one must be tried at various cutting angles and, in addition, the kind of glass, the pattern design, and the strength of the etching acid that is to be used must be considered when selecting a diamond tool for engraving a particular kind of blank reticle. The advantage cited for diamond tools is that, when cutting narrow lines, they will maintain the desired fineness of point much longer than will steel tools.

Pantograph Engraving Method

Making the Template.—Of the many factors that enter into the successful manufacture of reticles, one of the most important is the accuracy of the template from which the design is reproduced. Templates (see Figure 1709) are metal plates containing the pattern of lines

in several ways, but the two ways most commonly employed are to engrave the necessary number of lines directly on the template, or else to make a rider which moves in the master line of the template and which carries holes correctly spaced to receive the tracing stylus for making the parallel lines.

The rider is often used to provide a smooth crossing for the tracing stylus where two lines intersect on the template, and thus acts to lessen the tendency to break the corners in the resist at the intersection.

The rider is usually made of a piece of brass about ½-inch square with a wedge-shaped slide on the bottom which fits the template grooves. A small hole is drilled on the top surface of the rider, directly over the center of the wedge-shaped slide, to receive the tracing stylus. If the rider is to be used for making wide lines, a series of holes is drilled on both sides of the center hole. These holes are spaced so that the lines, when made by the engraving tool, will overlap each other by from 30 to 50 per cent of their widths.

A second type of rider is used to clean out the resist where several parallel grooves have been milled in the template to make a wide line on the reticle. This type of rider fits the milled template grooves also, but the holes which receive the tracing stylus are drilled in the rider between the parallel grooves in the template. With a rider of this construction, the wide lines may be cleaned out quite thoroughly.

Engraving the Blank Reticle.—Before actual engraving is undertaken, the engraving machine must be properly set. At Frankford Arsenal two methods are used for setting the pantograph engraving machine shown in Figures 1709 and 1710. The first method is used when it is known, or suspected, that the center of one or more of the reticle holders, when fastened in its stage position, will not be properly aligned with its engraving tool. The second method may be used when it is certain that there is proper alignment between the center of each reticle holder and its engraving tool. In both methods a 'setup center gage' is used. A setup center gage is a disk of steel, or a steel insert in a brass ring, which has the same thickness as a reticle holder with its blank reticle, and the same diameter as the holder, and which has a spherical depression in the exact center of one surface. The gage is ground or lapped until the diameter of the depression does not exceed 0.005 inch.

In the first method of setting the machine, the setup center gage is set in one of the stage positions of the machine, and the template is clamped on the table of the machine in such a position that when the tracing stylus is placed at the exact center of the pattern, the engraving tools in their holders are approximately centered over their corresponding stage positions. Next, the stage containing the setup center gage is moved until the center of the gage is directly under the point of the engraving tool. Now the setup center gage is removed by loosening the front one of the three screws which are holding it, and is transferred to another stage position. This time the setup gage (not the stage), is moved by means of the three adjusting screws that hold it on the stage until its center is under the point of the second engraving tool. Once more the setup center gage is removed, by releasing the front clamping screw, and is moved to a third stage position where the centering adjustment operation is made again. The procedure is repeated until all the stage positions have been centered under their respective engraving tools. Since the diameters of the setup center gage and of the reticle holder are the same, and since only the front clamping screw was loosened when the setup center gage was removed, when the reticle holders with their blank reticles are mounted in the stage positions they will be centered properly also. When this operation has been completed, each engraving tool will be lined up with the center of its respective stage position.

A second method for setting the machine is to mount a setup center gage in one stage position, and then set the point of the tracing stylus in the exact center of the template. Next, the template is moved slowly until the point of the engraving tool is directly over the center of the setup center gage. When the proper location has been found the template is clamped in position on the table. By

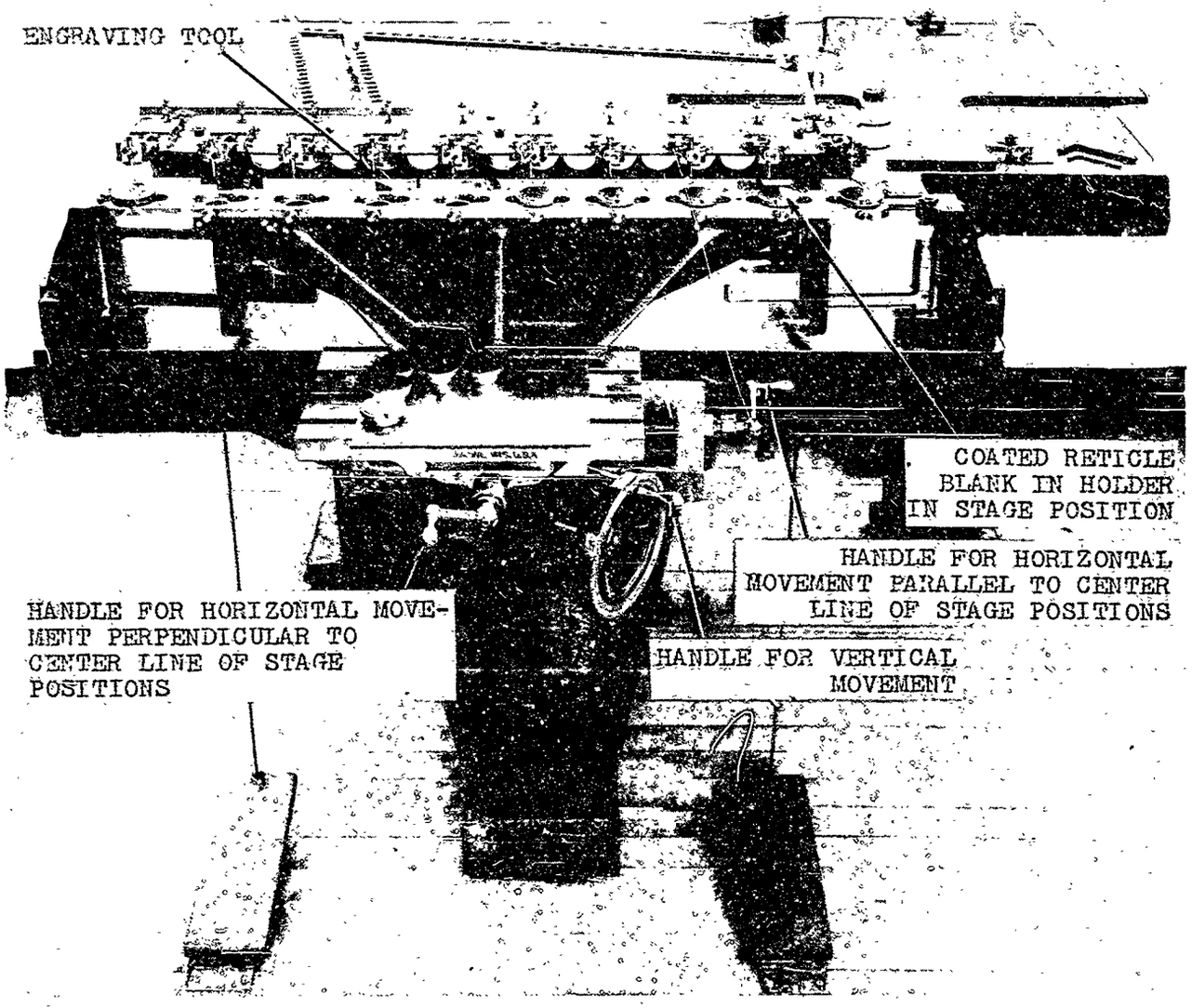

Figure 1710.—Front View of Pantograph Machine for Engraving Ten Blank Reticles Simultaneously.

this method all the tools are centered at the same time, since each of them has been aligned previously with its respective reticle holder.

Before the actual engraving is started, it is advisable to oil the grooves in the template, in order to insure that the tracing stylus will slide along them smoothly, as any jerky motion will be reflected in the lines that are engraved in the wax resist on the blank reticles. Of course, the grooves must be clean and free from dirt and grit, as even the slightest obstruction of the stylus will affect the pattern. As a protection against dirt and also to make the wax resist itself respond more uniformly to the action of the engraving tool, it is well that the engraving room be air conditioned A temperature of approximately 76°F., and a relative humidity of about 45 per cent provides a very satisfactory atmosphere.

In performing the actual engraving, the blank reticles are mounted on the stage of the machine, and the stage is raised carefully until the points of the engraving tools enter the wax coating and just touch the glass. The stage elevation is accomplished by turning the vertical screw in the front of the machine; this screw is provided with a crank and a circular engraved scale which reads in thousandths. In case any of the needles do not enter the wax sufficiently, it may be necessary to place a

small weight, in the form of a thin washer, or individual engraving-tool posts. From this point on, engraving of the reticle pattern in the coat of resist is carried out by movement of the stylus in the grooves cut in the template.

Multiple-tool Engraving Machine. *Frankford Arsenal.*—This machine (see Figures 1709 and 1710) is arranged to transfer the pattern of a template to ten blank reticles simultaneously and with a reduction of 15, 20, 30, or 40 diameters, although a reduction of 20 diameters is the one that is used most commonly. The long arm of the pantograph is supported on the table by a ball-bearing post which rolls on a piece of plate glass laid on the table for the purpose. The stage of the machine, which carries the ten blank reticles in their holders, can be moved vertically and in two directions horizontally, one parallel to the center line of the row of stage positions and the other perpendicular to this center line. All three motions are controlled by micrometer adjustments. Because of this control, the machine can be used as a ten-place cross-line machine if desired. The purpose of cross-line machines is described later in this chapter.

Eastman Kodak Company.—This machine, illustrated in Figure 1711, is designed to engrave thirty reticles simultaneously, and, while using a similar pantograph system to reduce the motion of the tracing stylus, incorporates several devices which differentiate it from the Frankford Arsenal machine described above.

In this machine the pantograph sections are floated on machine oil instead of resting on a ball bearing that rolls on a solid table. Each floating support (see Figure 1711) consists of a metal pan, about 8 inches in diameter, which carries an adjustable vertical rod at its center that supports a pantograph tube arm. The bearings at all intersections of the pantograph arms are precision balls resting in ground, cone-shaped seats. This method of support provides for a smooth and almost frictionless action for the pantograph reducing motion. In the Frankford Arsenal machine, the stage carrying the blank reticles is raised mechanically until the faces of the blanks touch the points of the engraving tools, which are clamped in turn in their supporting holders attached firmly to a supporting bar. In this machine, the engraving tools are suspended individually in suitable guides by fine resistance wires. The stage is raised until the faces of the blank reticles are very close to the points of the engraving tools, and then, by pressing a foot switch, the operator passes a current of electricity through the resistance wires and heats them. This heating causes the supporting wires to expand, *i.e.*, increase in length and thus lower the engraving tools onto the faces of the blank reticles. This method insures that the engraving tools approach the faces of the blanks slowly and gently. When the engraving has been completed, the foot switch is released, the supporting resistance wires cool, contract, and thus lift the engraving tools from the blank reticles.

Single-tool Engraving Machines. — The method used in engraving on single-tool machines is similar to that used on multi-tool equipment, except that only one engraving tool has to be aligned with one blank reticle.

George Gorton Machine Company.—This is a single-tool machine (see Figure 1712) which is used to make special and experimental designs on single blank reticles when no templates are available. Chucks and other special fixtures for holding the blanks can be mounted on the stage, which is equipped with T-slots. In addition, the stage can be moved horizontally in two directions, perpendicular to each other, with lead screws that are controlled by micrometer adjustments. Because of this the machine can be used as a crossline machine, as described later in the chapter. The face of the blank reticle is brought into contact with the point of the engraving tool by raising the stage with a vertical screw located in front of the column of the machine.

Crossline Engraving Method

Where the pattern that is to be placed on the blank reticle consists of straight lines, the work can be done on a crossline engraving machine, without using a template. These machines contain a chuck which can be rotated on closely-fitted bearings, and a carrier or carriage to hold the engraving tool. The coated

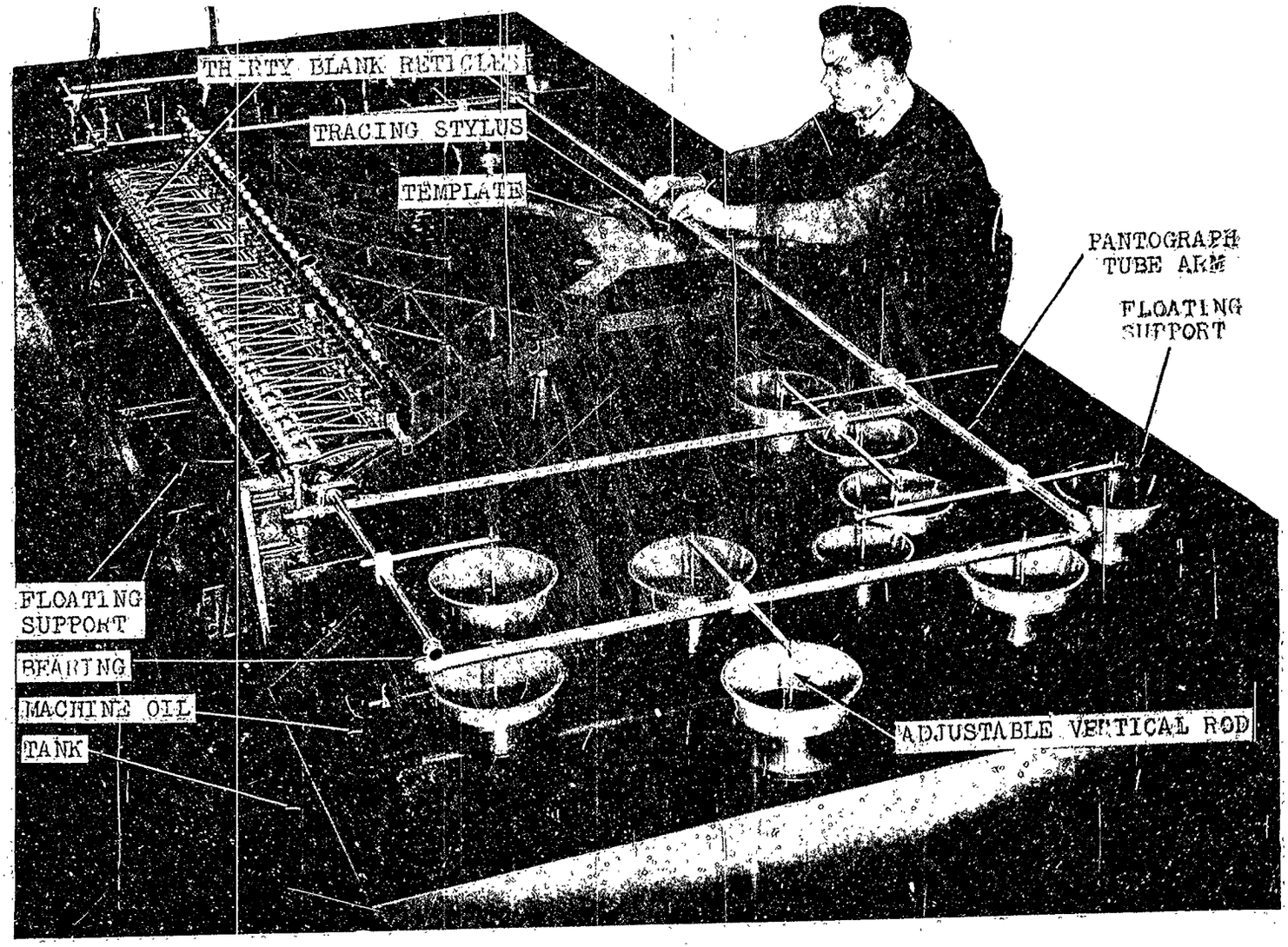

Eastman Kodak Company

Figure 1711.—Pantograph Machine for Engraving Thirty Blank Reticles Simultaneously.

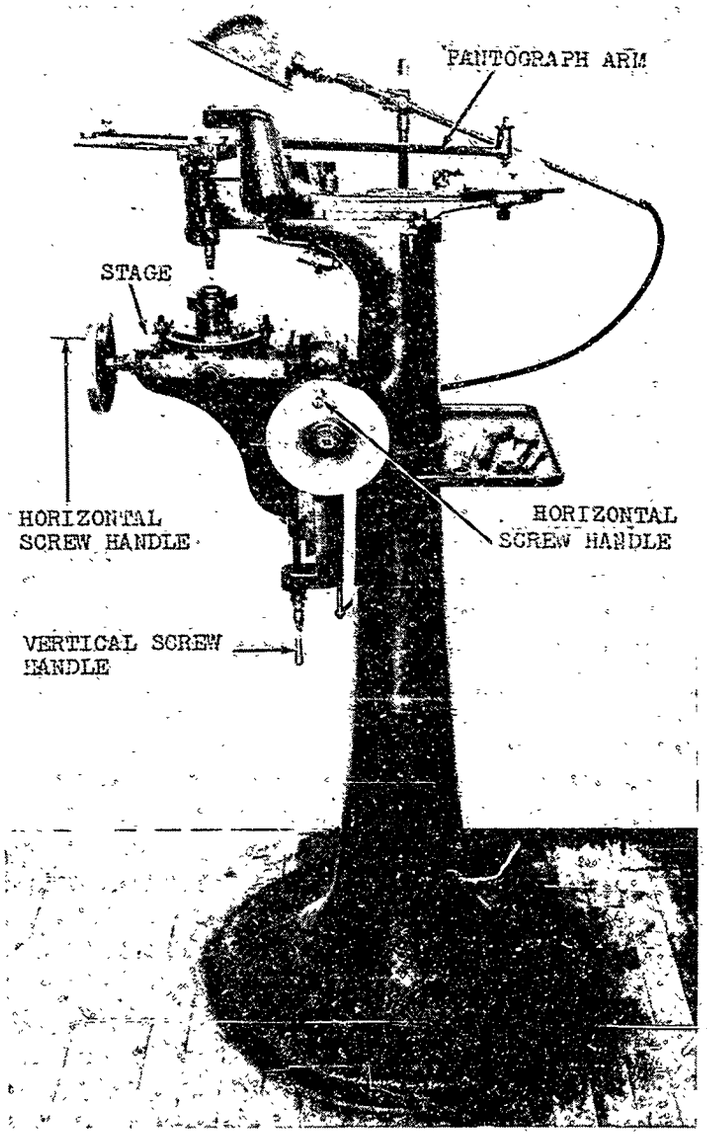

Figure 1712.—Gorton Machine for Engraving a Single Blank Reticle.

blank is mounted in the chuck in such a way that the center of the blank coincides with the center of rotation of the chuck. The position of the chuck, and therefore of the blank, can be determined by means of a micrometer or vernier indicator. On some machines, the travel of the tool is also controlled by a micrometer adjustment.

There are two principal methods in use for engraving crossed or intersecting lines on a crossline machine. The first is to start at a point of intersection and cut the resist by moving either the engraving tool (or the carriage containing the blank) away from the point of intersection. This method provides good corners where the lines meet, but it is sometimes difficult to obtain accurate intersections, because two or more parts of the same line are not drawn with one setting of the chuck. The other method is to use a rather thick coat of resist and draw all lines that are parallel and lie in one direction, raising or lowering the engraving tool in its carrier (or carriage) as may be necessary. When the first set of parallel lines has been completed, the chuck is turned, and another set of parallel lines which may intersect some or all of the first set are drawn. This operation is repeated until the pattern is complete. When this latter method is used, it is advisable to move the engraving tool through the cut twice in order to insure that all the resist has been removed and that the lines are clean. A variation of this method is to engrave all the lines in one direction, then remove the holder with the blank reticle and etch the lines (as will be described later), then recoat the blanks, return it to the machine, adjust it accurately, and cut another group of parallel lines. While this method gives straight line-intersections, but not always good corners, it has a tendency to ruin the point of the engraving tool when it crosses lines that have been acid etched.

In addition to engraving straight lines, a crossline machine can be used to engrave circles, the centers of which lie at the center of rotation of the chuck, by merely setting the engraving tool in its carrier (or carriage) at the proper distance from the center as determined by its micrometer adjustment and then, with the engraving tool remaining stationary, turning the chuck in its bearings.

Crossline Engraving Machines. *Naval Gun Factory (Universal Ruling Instrument).*—In this machine, see Figure 1713, the tool carrier is stationary, and the reticle chuck is horizontal and turns on a vertical axis. The chuck, which is of the watchmaker's universal type, is mounted on a compound carriage. This carriage moves on longitudinal ways, is controlled by a longitudinal-slide hand wheel and dial, and can be locked in place by the lead-screw

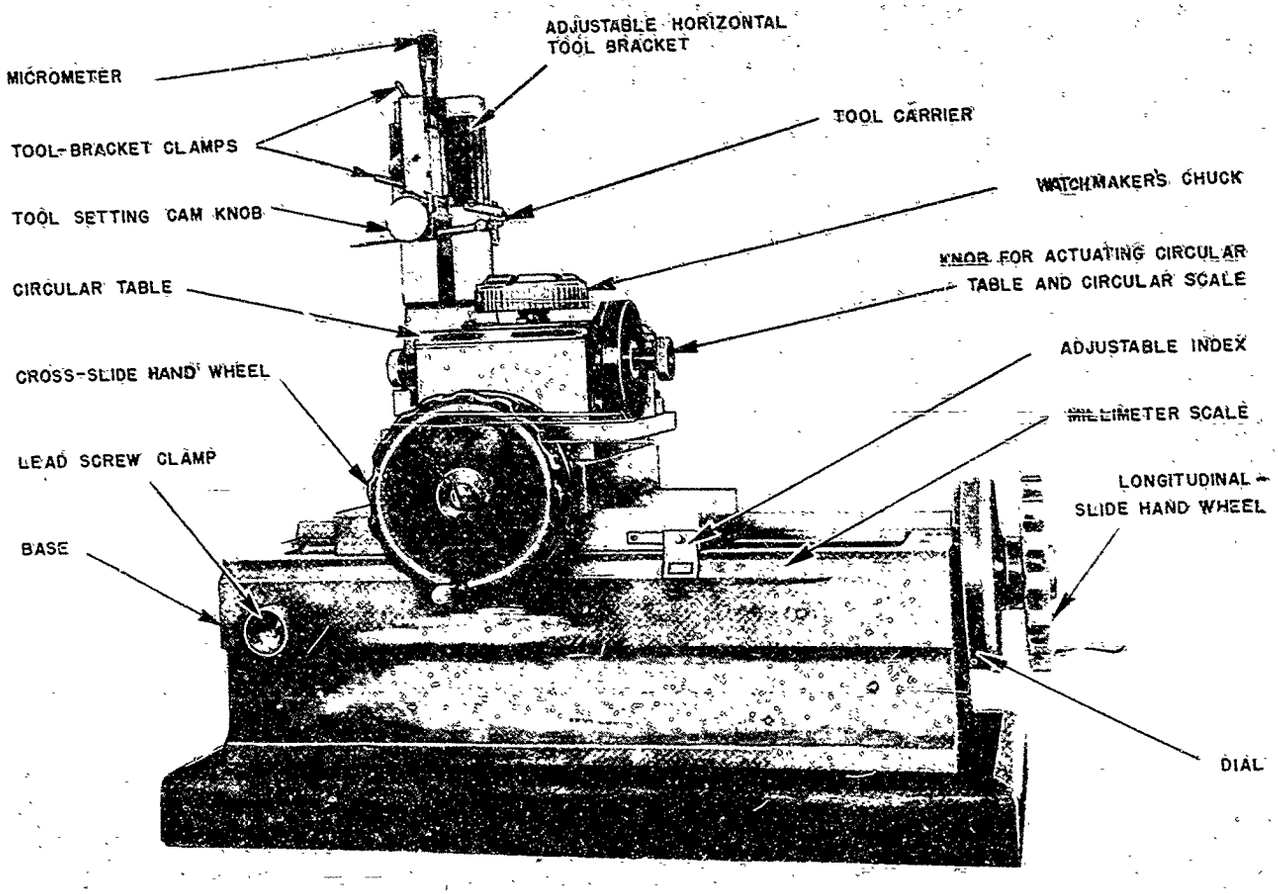

Naval Gun Factory

Figure 1713.—Universal Dividing and Ruling Instrument.

clamp. The cross slide, which carries the axle of the chuck, travels across and perpendicular to the motion of the longitudinal slide and is controlled by the cross-slide hand wheel. Finally, the chuck itself can be rotated on its axis by the knob which actuates the circular table and its movement can be measured by the circular scale. The vertical movement of the engraving tool is indicated by the micrometer at the top of the tool carrier.*

Eastman Kodak Company.—This machine (see Figures 1714 and 1715) is designed to engrave lines of two different widths on a blank reticle and contains three major sections. The central section contains a hinged chuck which holds the blank reticle in its holder, and which can be rotated about a vertical axis. The chuck can be indexed accurately to stations 90° apart.

The two other sections are approximately similar to each other. Each contains a tool carriage that travels on two round ways and carries an arm which supports the engraving tool. Both tool carriages are equipped with means for adjusting the position of the arm and for lowering the engraving tool onto the coated blank in the chuck. The brushes on the chuck are for cleaning the points of the engraving tools as they pass through. Each tool carriage is brought up to the work by moving the corresponding lever at the end of the machine. While the left-hand tool carriage (see Figure 1714) engages a line the full diameter

*For a further description of this machine, see: Bureau of Ordnance (Dept. of the Navy), *Optical Equipment—Optical Repair Data.* Pamphlet No. 463. 1st revision, pp. 36–38. July 1942.

of the blank, the travel of the right-hand carriage (see Figure 1715) can be controlled by adjusting the travel-limit, knurled nuts at the rear of the machine. This machine has the advantage that, by using properly-ground engraving tools, lines of two different widths can be engraved on the blank without changing the machine.

PHOTOGRAPHIC ENGRAVING

In the photographic engraving process, the blank reticle is coated with silver or other suitable material, and then, over this coat, is placed a photographically sensitive film. The pattern is impressed on this film by projection through a lens. Next, through treatment with suitable chemicals, the pattern is transferred to the underlying coating. After this, the film is removed and the coating that remains on the blank, and in which the pattern has been 'cut' with chemicals, becomes the resist. In the etching process which follows, the blank reticle is exposed to the fumes of hydrofluoric acid, or to the acid itself, and etching is thus accomplished as it is after the mechanical engraving process.

Using a Metallic Resist

(Minneapolis-Honeywell Regulator Company)

Mounting on Silvering Disk. — A circular plate, *i.e.*, a disk of double-strength window glass, is laid over a piece of paper toweling on an electric hot plate on 'low' heat (see Figure 1716). A piece of filter paper is waxed to the disk with bleached beeswax, which is applied readily to the warm glass and paper by rubbing a piece of wax lightly over the filter paper. Blank reticles, with the face having the greatest chamfer uppermost, are placed on the disk. This face is selected so that in the event regrinding and repolishing are necessary, the

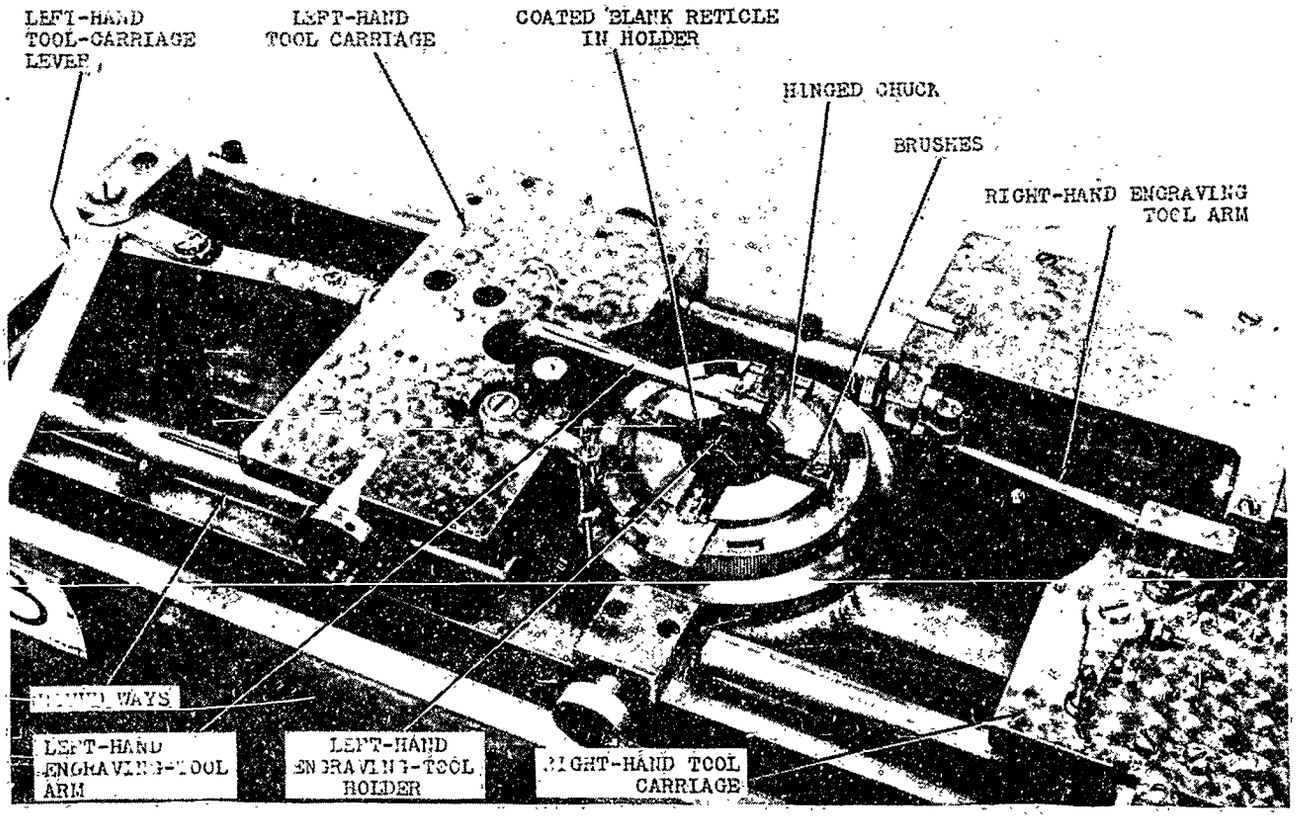

Eastman Kodak Company

Figure 1714.—Top View of Eastman Kodak Crossline Engraving Machine Showing Left-hand Carriage.

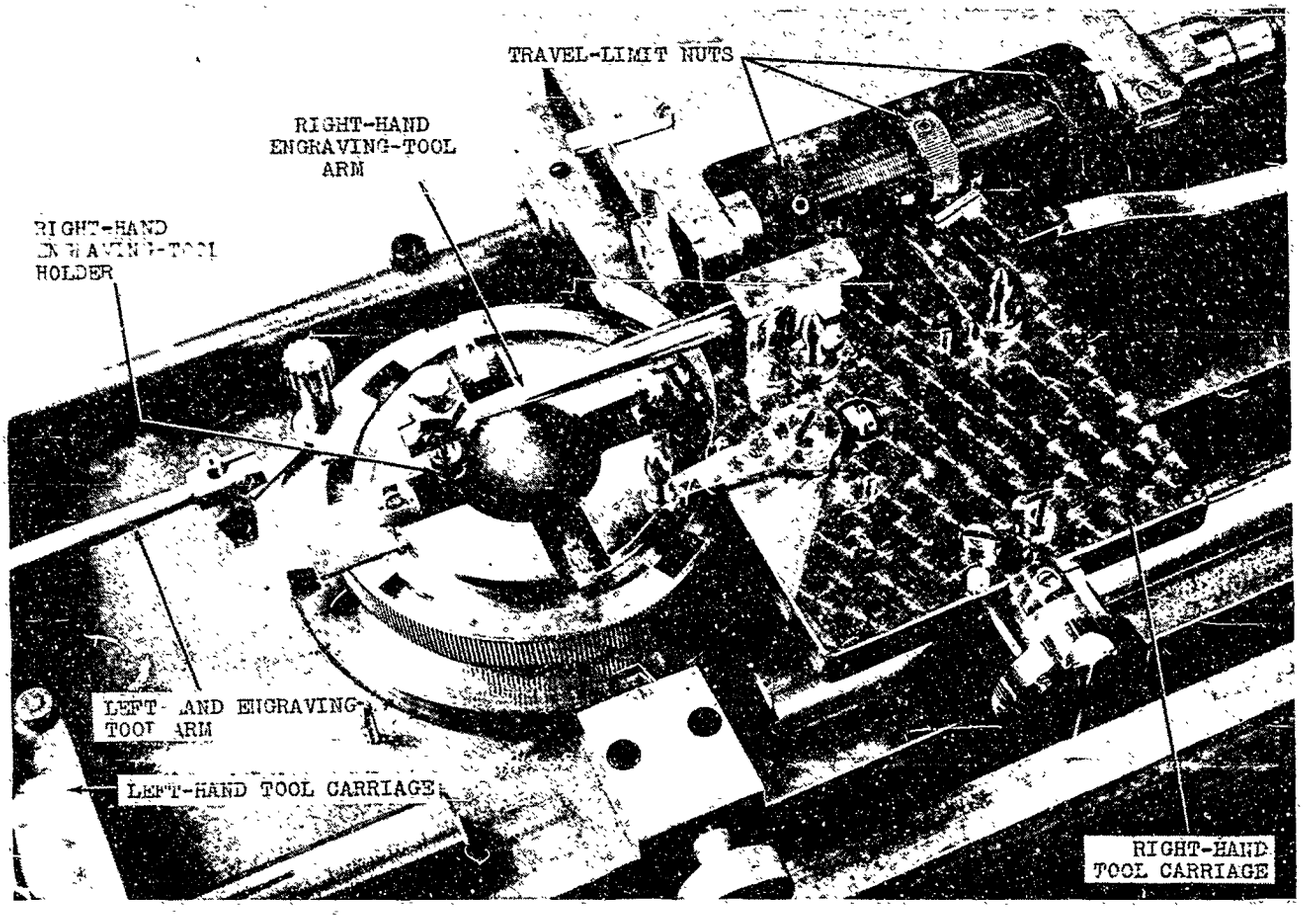

Eastman Kodak Company

Figure 1715.—Top View of Eastman Kodak Crossline Engraving Machine Showing Right-hand Carriage.

blanks will not need rechamfering. As soon as the blank reticles are arranged properly, the disk and its contents are removed from the hot plate and allowed to cool until the wax has solidified. The wax on the top faces of the blanks is removed carefully, so as not to soften the rest of the wax, by means of a small cloth wetted with trichlorethylene. The blanks are then ready for cleaning.

After being rinsed in distilled water, the disk of blank reticles is cleaned with a grease-free cotton swab that has been dipped in a paste of precipitated chalk, and a solution of tri-sodium phosphate and 'Aerosol' in water. The paste is made by adding 25 cc of 10 per cent Aerosol solution to 2000 cc of saturated tri-sodium phosphate solution. It is very important that this paste be kept clean and free of any grit or foreign matter by storing it in a covered jar.

Preparing the Silvering Solutions. — The silvering method used is known commonly as the 'Rochelle Salt method'. Since the silver is to be the acid-resistant layer on the glass blanks, *i.e.*, the resist, it is quite essential that the coating be continuous, free from holes, strong, and mechanically adherent. Two solutions are used, 'A', the silver bearing, and 'B', the reducing solution. These are mixed in equal portions at the time of using. Solution 'A' is sensitive to light and should be stored in brown bottles out of direct daylight.

In preparing the solutions, it is particularly important that the water be free from chlorides. This should be checked carefully and can be done as follows: To a 50-cm Nessler tube properly cleaned, add 50 cc of the water

to be tested, then pour in 10 cc of a 1-per cent solution of silver nitrate. Good distilled water will remain perfectly clear and colorless, and thus the relative amount of chlorides can be determined by the opalescence produced.

Silver-bearing Solution. — This solution, known as solution 'A', is prepared by measuring out 1200 cc of distilled water in a 2000-cc Erlenmeyer flask (see Figure 1717). To this, 20 grams of chemically-pure silver nitrate crystals are added. The flask is agitated until the crystals dissolve and then 7-per cent ammonium hydroxide (chemically pure) is added in small quantities. The solution will immediately turn to a muddy tan, then to deep brown, but, as more ammonium hydroxide is added, it will gradually become clear again. The addition of ammonium hydroxide should be stopped when the solution becomes a light straw color. If this end point is accidentally passed, some 6-per cent silver nitrate solution should be added to bring it back to the correct color. It is important that this color be reached, and that it remain for at least 10 minutes; since, apparently, it is the determining factor in the quality of the silver coating that is finally obtained. This solution is now filtered through a double thickness of filter paper, similar to Central Scientific Company's 'Cenco' #13251-B, 20 x 20 inches. The funnel of the filter should hold the entire 1200 cc in one pouring so that the preparation of the second solution is not delayed. The degree of filtering appears to have a bearing on the character of the final silver coating. Too much filtering retards or prevents the precipitation of collodial silver, or else deposits a coating which will not take a second layer from subsequent solutions. As soon as the filtering is completed, the volume of the solution is increased to 2000 cc with distilled water.

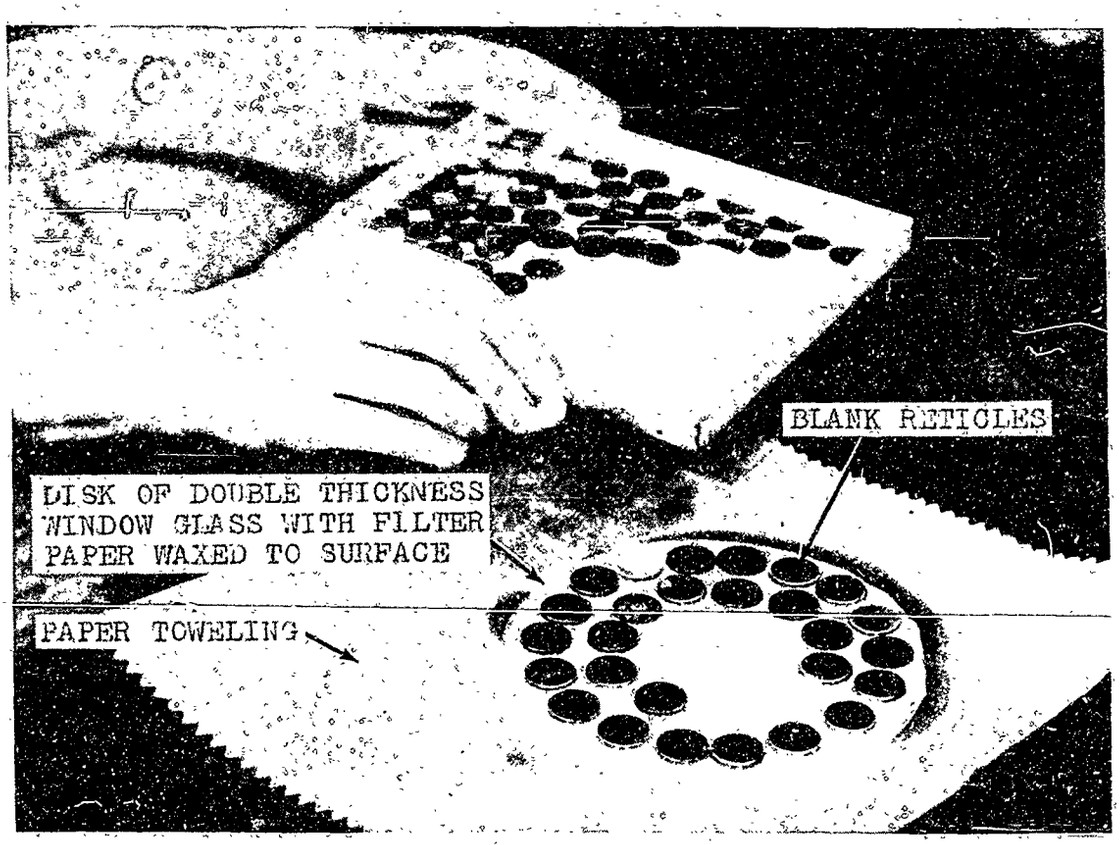

Minneapolis–Honeywell Regulator Company

Figure 1716.—Mounting Reticles with Hot Beeswax Prior to Silvering.

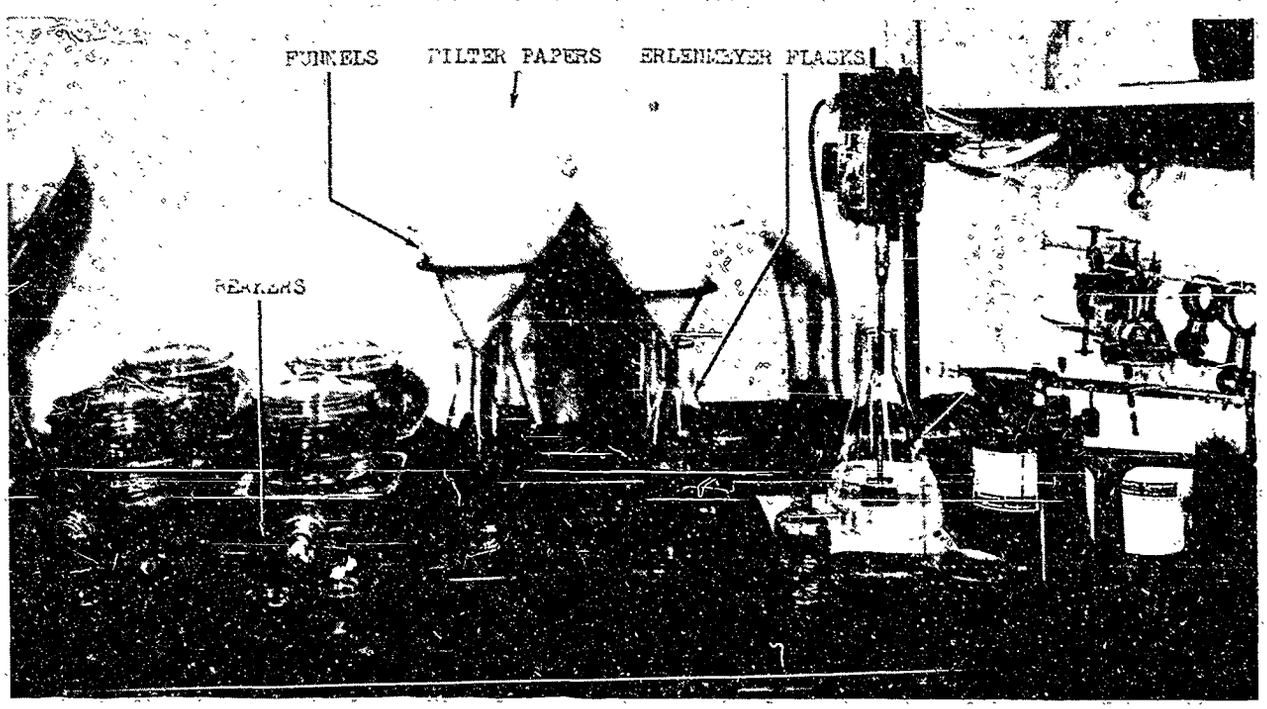

Minneapolis–Honeywell Regulator Company

Figure 1717.—Apparatus for Preparing Silvering Solutions.

Reducing Solution.—To make this solution, known as solution 'B', 1800 cc of water are placed in a 'pyrex' glass dish and 4 grams of silver nitrate are added. The mixture is boiled vigorously and 3.32 grams of chemically pure sodium potassium tartrate dissolved in about 20 cc of water are added. The boiling is continued for approximately 30 minutes; this will cause a bluish-green precipitate to be formed. The solution is then filtered through a double filter paper of the grade described above. The resulting filtrate will be a pale amber to olive green in color and should be increased to 2000 cc with distilled water.

Silver Coating.—Since the colloidal silver is deposited from solution, the glass blanks are supported face downward so that any loose particles or foreign matter will fall away from the face rather than onto it. The disk on which the blanks are mounted is rigidly suspended from the rotating member of a motor (see Figure 1718) by a stainless steel wire spider, a rubber suction cup, or similar support. The disk is rotated at 40 rpm; 8 revolutions in one direction and then 8 revolutions in the other direction. The rotation of the disk tends to dislodge any air bubbles or loosely-held sludge, while the counter rotation of the solution gives a good wiping action and prevents centrifugal force operating to pile up all the solution at the outer edge of the dish.

Equal amounts of solutions 'A' and 'B' are mixed at the time of immersing the disk so as to cover it well. At ordinary room temperatures, the solutions are spent in just 10 minutes. At the end of this time the residual solution is poured out and the dish is rinsed in distilled water and filled with fresh solutions. After immersion, the disk is turned over and the blank reticles are swabbed very lightly in a small stream of distilled water to dislodge all loose particles so that subsequent silver coating will cover up any voids or holes.

A small stream of distilled water is used to rinse off any olive-drab coating that appears on the first coat of silver. This coat may then become silver-blue. It has been found to be necessary to apply five successive coats of silver to blanks that are to be used in precision instruments. At the end of five coatings the disk is placed, face up, in a motorized centrifugal drier and flooded with water. The lid is

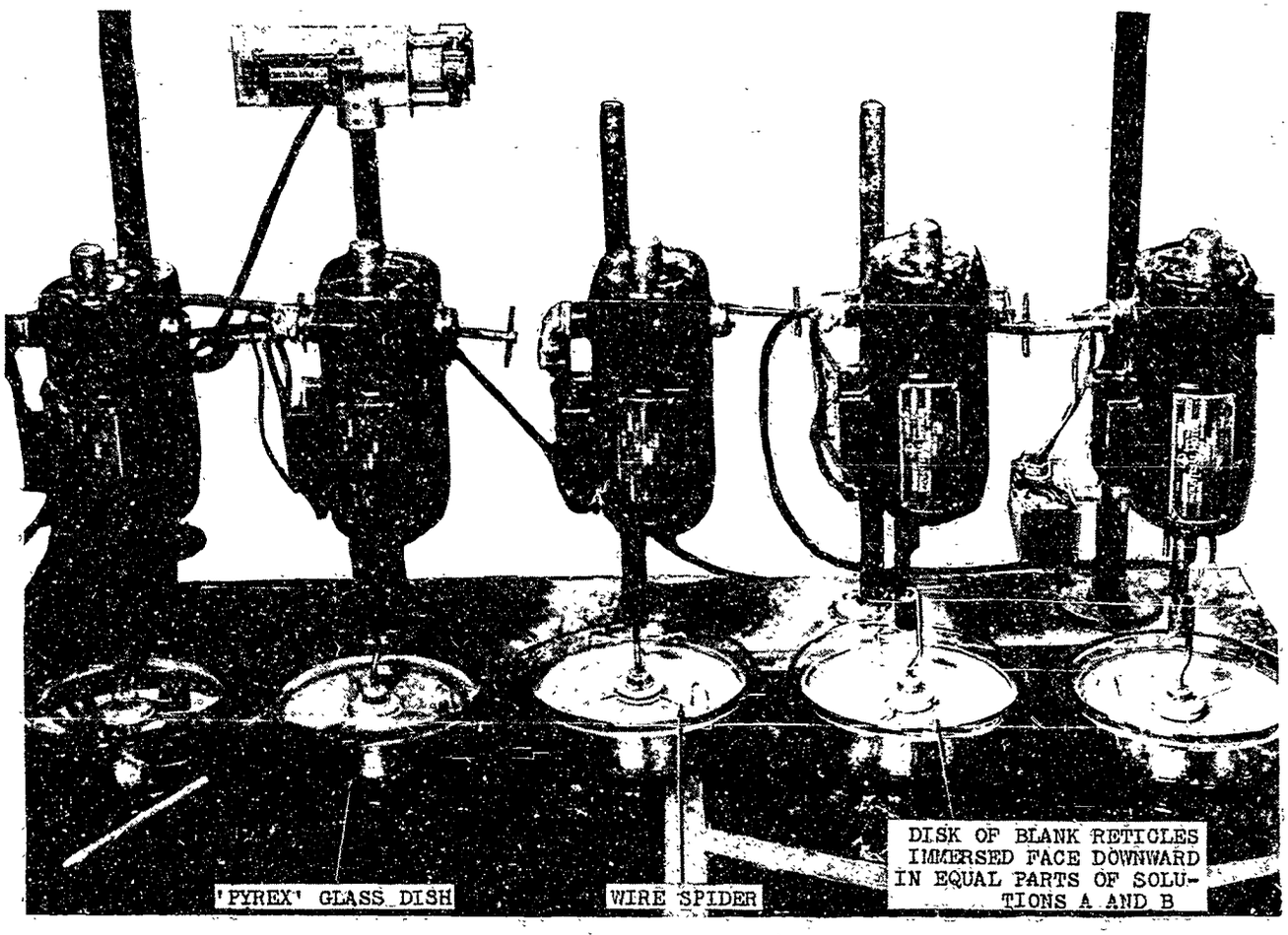

Minneapolis-Honeywell Regulator Company

Figure 1718.—Apparatus for Silver Coating Blank Reticles.

held securely over the centrifuge and the disk is brought up to a speed of 1725 rpm, and then the motor is turned off. While still running smoothly, the lid is removed so that the faces will dry. After the motor has coasted to a stop, the glass is examined for cleanliness and, if necessary, the washing in the centrifuge is repeated.

Removing from Silvering Disk. — Before removal of the blanks from the silvering disk, they are polished with dry precipitated chalk on a chamois skin stretched over plate glass. Next, the silver is cleaned from the back of the disk with a pad of 'Birdseye' diaper cloth wet in concentrated nitric acid (HNO_3). This is neutralized with a pad wet with ammonium hydroxide (NH_4OH), and then the ammonium hydroxide is washed off with distilled water (see Figure 1719). After this, the disk of blanks is taken into a dark room and examined for holes in the coating with a 5-power magnifier, using light transmitted through the disk. If no holes, or only a few holes which will not interfere with the design, show in each blank, the plate is stored in the dark for at least 12 hours to permit all absorbed water to evaporate and to allow the silver coating to become hard and firm. Several blanks should be polished lightly with chamois and chalk to make sure that there are no covered pinholes. If there are too many holes, the entire plate should be examined, and if unfit for use, stripped and replated.

If, after 12 hours of drying, and subsequent polishing with chalk on chamois, the coating is still satisfactory, the disk is placed on a paper towel over a hot plate at a low heat in order to remove the blanks. When the disk becomes

Minneapolis–Honeywell Regulator Company

Figure 1719.—Washing Disk of Silvered Blank Reticles with Distilled Water.

hot to the touch, about 140°F., it is lifted off the paper and the blanks are carefully picked out of the soft wax and placed on soft cloth in a shallow dish of trichlorethylene warmed to 80°F. After cooling, the blanks are placed in a suitable holder on a motor shaft and spun at 3400 rpm to remove the wax and trichlorethylene. Then fresh trichlorethylene is poured on the blank reticle, the blank is allowed to soak for several seconds and is spun as before. This procedure is repeated until the blank is clean. The cleaning may be improved by using a small swab of cotton wet in trichlorethylene.

Polishing. — The silvered blanks are polished by hand rubbing on the chamois covered plate-glass surface, using precipitated chalk. This polishing is done so that the coating of photo-sensitive enamel to be applied later will be smooth and even. Special care must be exercised to keep the precipitated chalk perfectly free of all foreign matter, and the chamois skin should be handled carefully and stored in a clean place when not in use. The grade of precipitated chalk made by Merck & Company, Inc., Rahway, N. J., or by Central Scientific Company, Chicago, Ill., is quite suitable. After the blank reticles have been cleaned and polished, they are again inspected in a dark room, using a 5-power magnifier and transmitted light. Any blanks with defects which are likely to come close to the engraved pattern are set aside for resilvering, but if the silvering is good in an area where the pattern could be placed, the blank is marked on the edge with a china-marking pencil to indicate to the photo-engraver where the bottom of the pattern should be placed in order to miss silvering defects. It is possible to get continuous, heavy, hard coatings of silver if this procedure is followed carefully, but no small detail can be overlooked. Even the method of filtering, using one, two, or three layers of paper has a very definite effect on the particle sizes suspended in the solutions and hence determines the speed of precipitation and the nature of the silver coating.

Photographic Sensitive Coating. — The blank, silver-coated reticle is placed on a motor-driven spinner (from 1800 to 3200 rpm) which is directly under the heated-air pipe of the engraving cabinet (see Figure 1720). The air is held at a temperature of 180 to 184°F. and should be passed through a Westinghouse 'precipitron' unit, or equivalent, to clean it. The spinning blank is cleaned again by holding a cotton swab soaked in fresh trichlorethylene against it. When the blank has dried, a few drops of 'engraver's cold-top enamel' is dropped on it with a medicine dropper and allowed to dry for 15 seconds. Another application of enamel is made while a razor blade is held at the edge of the blank. This will affect the thickness of the coating also.

Exposing.—The blank reticle is placed in a printing holder and exposed to a light for approximately 60 seconds, which should copy the exact width of the lines in the master. A longer exposure will reduce the width of the lines of the pattern.

Developing.—After exposure to a light, the reticle is held in a small test clip and developed in purple-stained developer for 20 seconds which removes the unexposed enamel. Then the blank is washed through two rinses of distilled water and spun in the spinner to remove all rinse water. After this, the blank reticle is rinsed on the spinner with trichlorethylene to remove any grease.

Removing the Visible Silver.—The surface is first swabbed with a small tuft of cotton on the end of a toothpick, or with a camel's-hair brush: Next the silver coating that has become visible by the action of the developer is removed by applying a mixture of potassium ferricyanide and hypo solutions separately from dropping bottles. This mixture, whose strength may be varied considerably to suit the operator, is known to photographers as 'Farmer's reducer'. The reticle block is swabbed again when the silver has been removed, to make sure that the pattern is clean. If this is not done, the etching will be very irregular and uneven. In fact, further cleaning is sometimes necessary. This is done by soaking the blanks in one part trisodium phosphate solution for about 15 minutes at room temperature, and washing in distilled water. Finally the blank reticles are washed by soaking in distilled water for about 15 minutes, after which a group of ten or twelve are dried on the spinner under a warm air blast

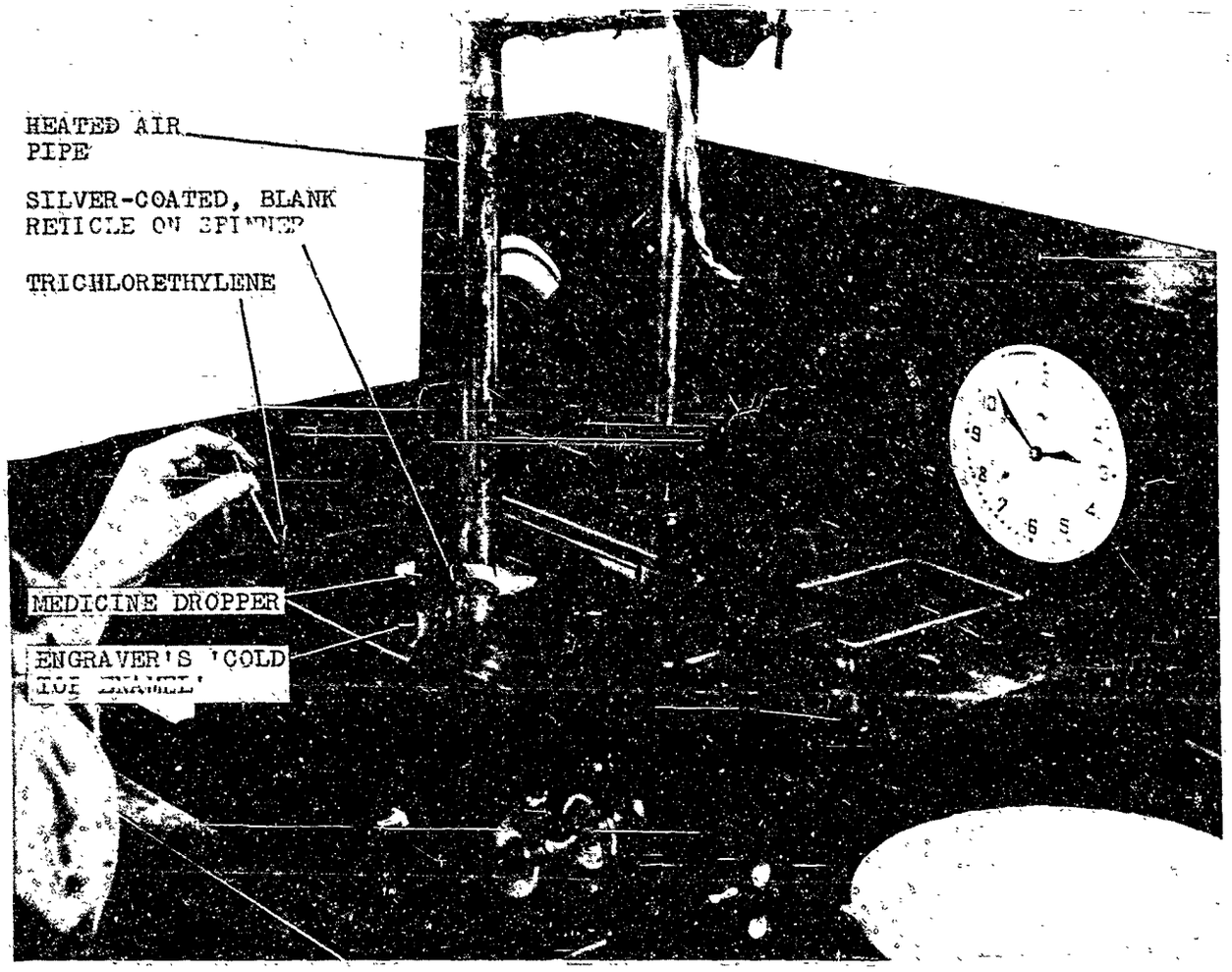

Minneapolis–Honeywell Regulator Company

Figure 1720.—Apparatus for Applying Photographic Emulsion to Blank Reticles.

(from the precipitron), in the engraving cabinet. Two additional rinses of distilled water are applied to the blank reticles while on the spinner.

Touching Up.—After the visible silver has been removed, the blank reticles are inspected under a microscope for pinholes and excellence of pattern. If the blank is found to be reasonably free from defects (up to 12 pinholes are permissible) it is ready to be 'touched up'. This is done to cover any pinholes or other defects and thus protect the face from the hydrofluoric acid at undesirable points in the etching process. To prepare the reticle blank for touching up, the recess in a holder is given a coating of asphaltum and, while still wet, the blank reticle is placed in wet asphaltum which cements it into the holder. Then the large silvered areas are masked in roughly with a brush dipped in asphaltum dissolved in trichlorethylene. After this, the holder with the masked-in blank reticle is placed on the illuminated touch-up box (see Figure 1721) and each pinhole is covered with a drop of beeswax applied with an electric needle. The electric needle is essentially a small twisted wire loop made of #40 enameled nichrome resistance wire attached to a handle about the size of a lead pencil. This is heated sufficiently to melt the wax by a current from a 2-volt a-c supply which is adjusted by means of a rheostat to about 125 milliamperes. In use, the needle is touched to a small lump of bleached beeswax so that it picks up a tiny drop of the wax at

the 'edge' of the loop. This drop is then touched to the blank reticle surface over a pinhole or imperfection. By 'inching' these drops along toward a line it is possible to patch right up to the pattern itself. When the touching-up has been completed, the blank reticle is given a final inspection for pinholes to insure that all holes have been covered with wax. The edge of the face is given another coat of asphaltum, and the back is covered completely with asphaltum.

Using a Non-metallic Resist

Some efforts are being made to develop a non-metallic resist that will be photographically sensitive, so that the blank reticle can be coated with this resist and exposed to a projection of the pattern. Then, when this pattern has been developed, the spaces between the lines will become impervious to hydrofluoric acid, while, at the same time, the developer will change any part of the film that is a line of the pattern in such a way that it can be removed and thus expose the glass under it to the action of the hydrofluoric acid.

ETCHING

Etching consists of exposing that part of the glass face of the blank reticle, that is not covered by the resist (wax or silver coating), to the fumes of hydrofluoric acid or to the

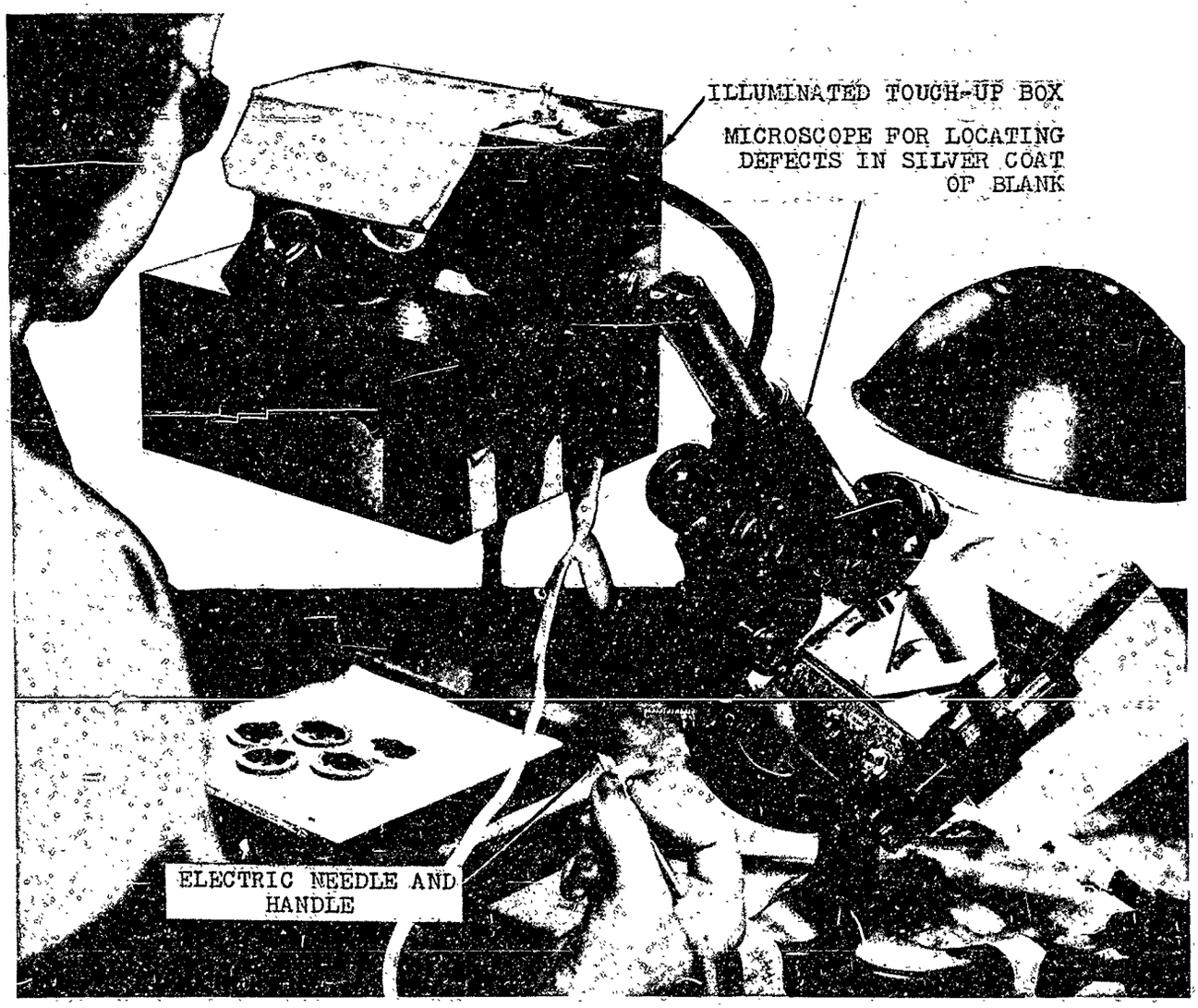

Minneapolis-Honeywell Regulator Company

Figure 1721.—Apparatus for Touching Up Pinholes in Silver Coat of Blank Reticles.

liquid acid itself. In general, the longer the glass is exposed to the action of the acid, the deeper the lines of the pattern that will be etched into the glass.

All etching, whether by the use of fumes or liquid acid, should be done in a fuming hood that is equipped with an exhaust pipe or flue which will draw away the acid fumes, and the operator should wear rubber gloves to protect his hands. Hydrofluoric acid in either vapor or liquid form is destructive to both skin and lung tissues.

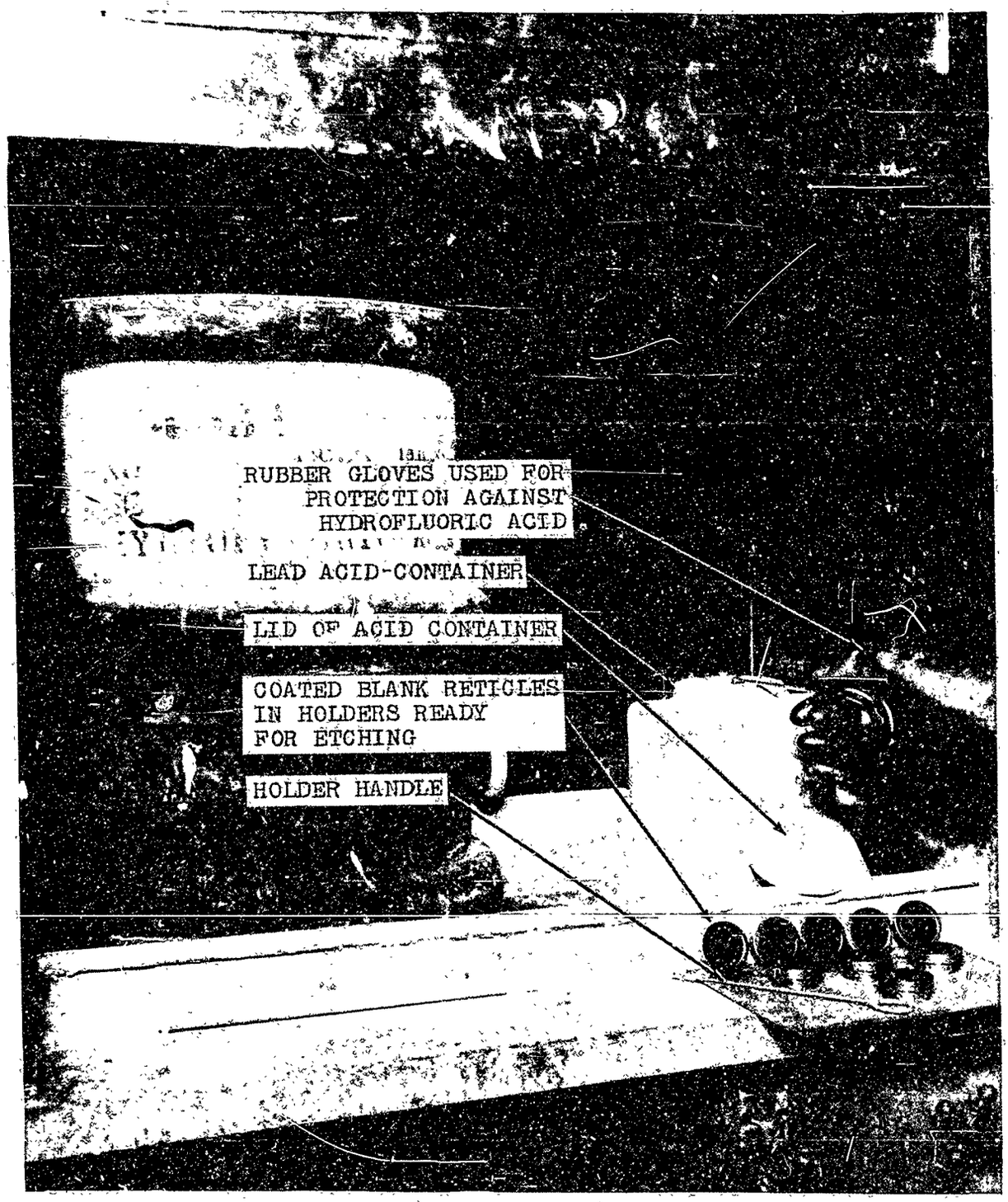

Figure 1722.—Blank Reticle Exposed to Hydrofluoric Acid Fumes.

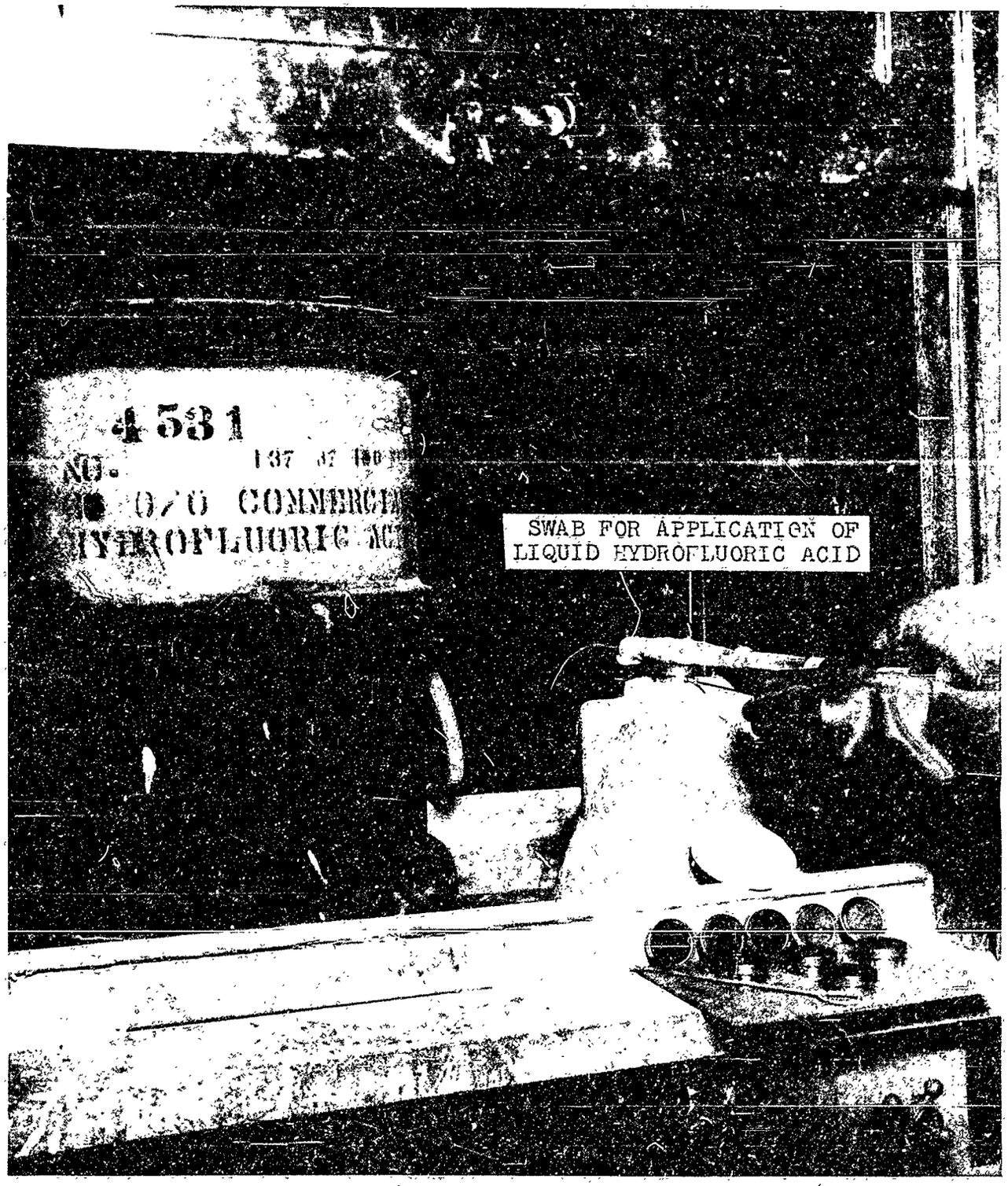

Figure 1723.—Applying Hydrofluoric Acid to Blank Reticle with a Swab.

Frankford Arsenal

When the blank reticle has been properly engraved and inspection shows that it is ready for etching, a handle such as that shown in Figure 1722 is screwed into the tapped hole in the holder.

If the etching is by a vapor application, the blank is held over the opening in the top of the lead container of hydrofluoric acid, with the coated face down (see Figure 1722). If the etching is by a liquid application, it is done with a swab held in the operator's right hand as shown in Figure 1723, while the blank is held face up, but still over the lead acid container in order that any drippings will fall back into the container.

Figure 1724 shows two types of large holders, each used by Eastman Kodak Company to mount five blank reticles in individual reticle holders. This arrangement may be used for etching five blank reticles at once, provided an acid container with an opening large enough to allow simultaneous exposure of all five blanks is employed.

For vapor etching of narrow lines, 10 to 12 seconds is usually sufficient time to produce a proper depth for filling. For liquid etching of wide lines, the time requirement varies with the job and can best be evaluated by trial. The usual time is from ½ to 2 seconds. In either case, when the etching is completed, holder and blank are plunged into a tank of fresh water or a stream from a faucet.

Removing the Resist. — The holders with the blanks face down are then placed on a low temperature hot plate which has been covered with paper. A good paper for this purpose is ordinary newspaper stock. Such paper is not glazed and has good aosorbent qualities.

When the temperature of the holder becomes warm to the touch, the reticle and beeswax may be forced out of it with little effort. (The beeswax may subsequently be used until it becomes too thoroughly contaminated with gilsonite, when a clean batch must be prepared.) Next, the etched blanks are placed in metal racks having V-shaped sides, and hung in the vapor area of a trichlorethylene degreaser. (See Chapter 23.)

When the remaining wax is washed off, the blanks are removed from the rack and placed in a shallow pan of alcohol, the bottom of which is lined with paper or cloth to prevent scratching of the faces. The blank reticles are cleaned with alcohol and a soft cloth, and are then examined with a magnifier for imperfections of lines and faces. The pattern is checked carefully with a microscope or comparator and, if satisfactory, the lines are ready for filling.

Filling.—The material used for filling the etched lines of reticle patterns is composed of an adhesive, sodium silicate (Na_2SiO_3), mixed with a pigment. Titanium dioxide (TiO_2), manganese dioxide (MnO_2), black magnetic iron oxide (Fe_3O_4), and lampblack are the more common pigments used. (See Chapter 25 for further information concerning filling materials.)

Whatever pigment is used, the same general filling procedure is employed at Frankford Arsenal. The first step is to inspect the reticle thoroughly with a 10-power magnifier against both a light and a dark background (see Chapter 24). If this shows that etching has been satisfactory, the reticle is clamped in a holder (see Figure 1725) with the etched face upward. Next a drop or two, depending on the area to be covered, of a well-shaken solution of sodium silicate is applied to the surface of the reticle, using the rubber stopper of the bottle as an applicator. After this, the pigment is added to the sodium silicate and mixed with it by stirring with the end of a finger. The amount of silicate and pigment to be used depends more on the area of the pattern than on the number of lines that it contains. Since the adhesive contains sodium silicate, the mixture soon begins to air-dry. When the consistency of the filling starts to become tacky, the excess material must be removed, and then a finger covered with one or two layers of soft clean cloth, is moved in even strokes across the face of the reticle. The strokes are made the full length of the finger, turning the bottom of the finger forward and upward so that a clean area of the cloth is always presented to the face. This helps to prevent scratches. Care should be taken that the motion of the finger is always across the etched lines.

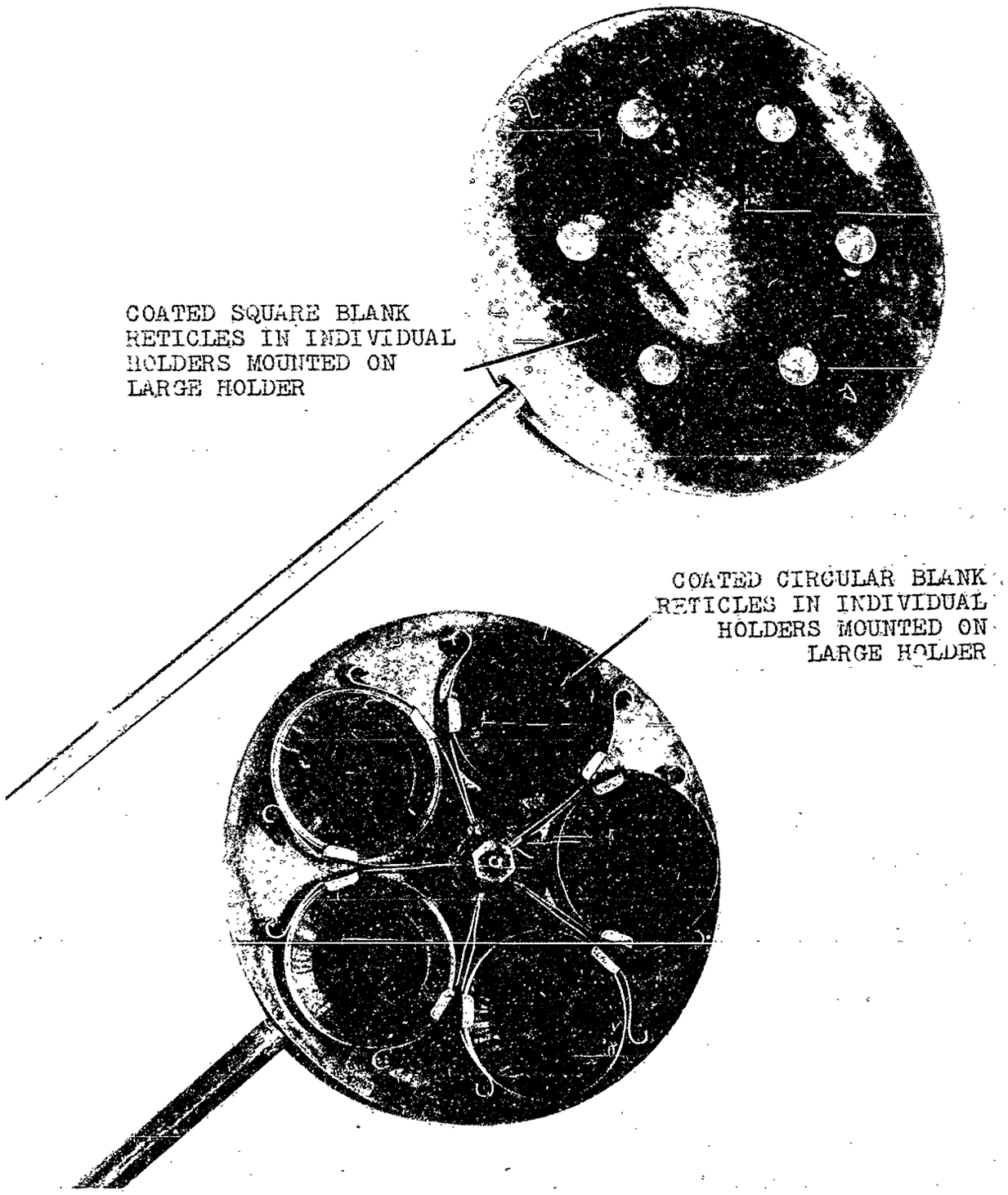

Eastman Kodak Company

Figure 1724.—Blank Reticles in Holders Mounted on Larger Holders for Etching.

When the lines are filled and opaque, the faces are again cleaned with alcohol and a soft cloth, and are examined for scratches in the same way they were inspected before the filling operation was started. Sometimes a small amount of the filling material stays on the edge of the reticle. This can be removed by rubbing the edge with a motor-driven eraser as shown in Figure 1726.

Minneapolis-Honeywell Regulator Company

In this method, etching of both narrow and wide lines are accomplished by exposure to hydrofluoric acid fumes, without direct contact of the liquid acid.

To assist the etching process, the blank reticles are placed in a cooler and held at a temperature of 40°F. for at least ½ hour, before etching. This cooler consists of a metal tank placed inside a larger insulated metal tank, with chipped ice used as a refrigerant between the two. The temperature of the air in the etching room is held at about 76°F., and the relative humidity at about 32 per cent. It is important that the temperature of the blank reticles as they come from the cooler be below the 'dew point' of the air in the etching room, because then a thin film of moisture forms on the bare glass surfaces in the lines when the blank is placed over the opening in the acid container. The quality of the etching that is obtained is improved with this moisture present.

After the blanks have been in the cooler for at least ½ hour, they are taken out, one at a

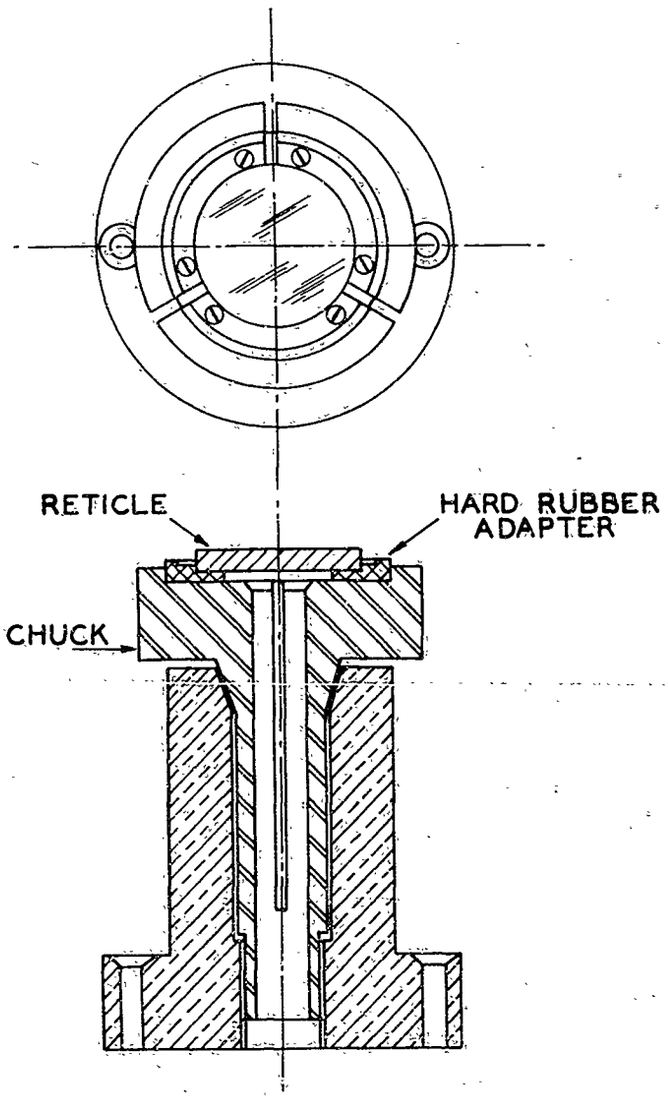

Figure 1725.—Reticle Holder Used While Filling Etching.

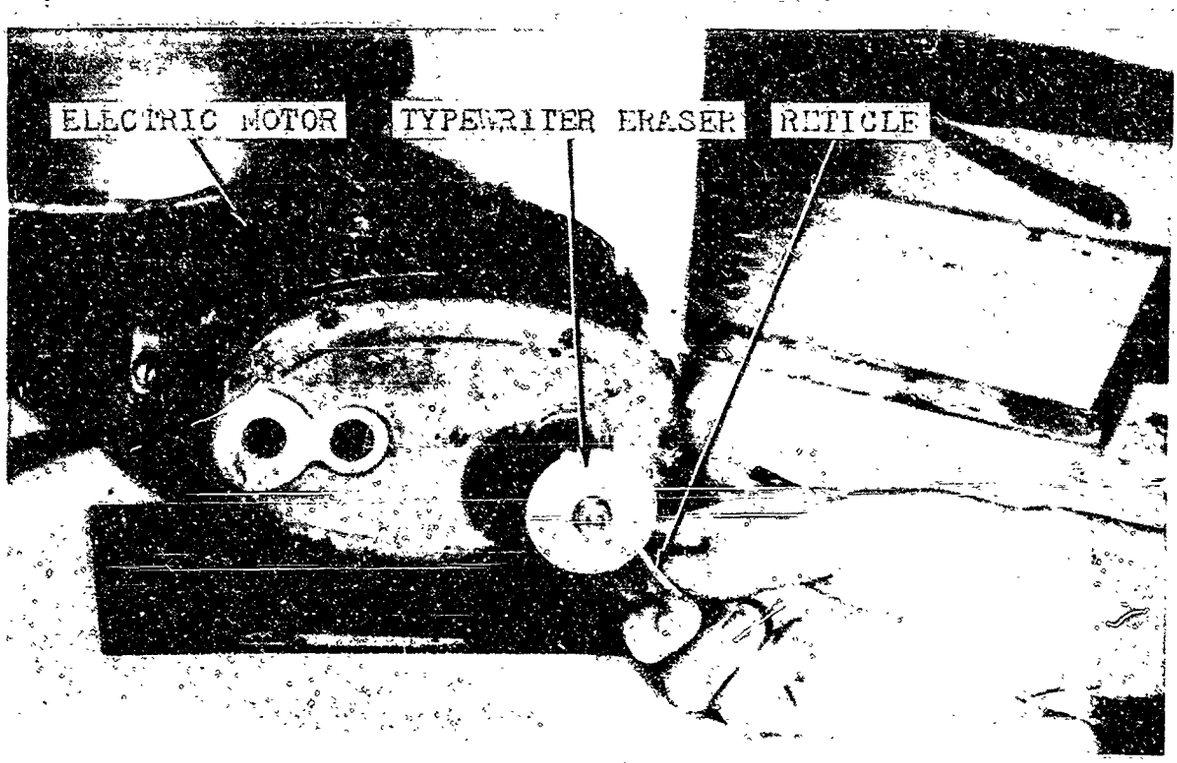

Minneapolis–Honeywell Regulator Company

Figure 1726.—Motor-driven Typewriter Eraser Used to Clean Reticle Edges.

time, placed on the hydrofluoric acid container, and exposed to the fumes at room temperature for the proper length of time to give a good clean etch. This time must be determined for each grade of glass by trial and error; it is recommended that the blanks of each type and grade of glass be kept separate and etched in groups, using a time exposure that is most suitable to each.

Upon completion of exposure, the blank is placed in a bath of running water to remove any remaining hydrofluoric acid, then in trichlorethylene to remove the asphaltum, and finally it is placed face down on a diaper cloth in nitric acid to remove the silver. After this, it is again washed in running water, and the reticle pattern is checked. Finally, it is again placed in trichlorethylene to await filling.

NON-ETCHING METHOD OF APPLYING RETICLE PATTERNS

In this group of methods, the lines of the pattern are placed on the blank reticle by depositing material on the face of the glass instead of filling in an etched depression. While this method dispenses with the use of hydrofluoric acid with its attendant dangers, the lines that are produced are raised from the face of the reticle rather than flush with it, and hence are more susceptible to injury from rubbing or other mechanical action.

One of the above methods consists of evaporating a metal on the face of the blank through a pattern cut in a mask which is made by either a mechanical or a photographic process.

Another method that is being developed for placing a pattern on a blank reticle consists simply of coating the blank with a photographically sensitive film, projecting the pattern upon it, developing the blank with a suitable photographic developer, and then impregnating the lines of the pattern which are in the film with a dye or pigment, and finally hardening the whole by baking.

While both of these 'non-etching' methods are in limited use, they are still considered to be in the developmental stage.

CHAPTER 18

CHEMICAL SILVERING

	Page No.
Silvering Prisms.	1802
Preliminary Inspecting.	1802
Cleaning.	1802
Silvering.	1803
Apparatus.	1803
Silvering Operation.	1803
Copperplating.	1805
Apparatus.	1805
Copperplating Operation.	1805
Heating the Prism.	1805
Waxing the Prism.	1806
Removing Excess Plating.	1806
Inspecting.	1806
Finishing Operations.	1807
Removing Wax Coating.	1807
Permanent Protective Coating.	1307
Cleaning and Wrapping.	1807
Cleaning the Apparatus.	1807
Silver Cutting Ocular "A" Prisms.	1807
Sharpening the Cutting Tool.	1807
Setting Up the Machine.	1809
Cutting the Silver.	1810
Removing Excess Silver.	1812

The application and design of a prism may require the silvering of one or more entire faces, or only a small strip of silver on one face. In either case, the entire face (or faces) of the prism is silvered after polishing. If only a small strip of silver is required on a face, the silver on that face is then cut, and the unnecessary silver is removed.

A coating may be applied to a polished glass surface by either chemical or physical action. Application of a silver coating by means of chemical deposition is discussed in this chapter. (For a method of applying a silver coating by physical means, see Chapter 19, *Evaporated Film Coatings.*)

A face that is to be silvered is thoroughly cleaned, and then colloidal silver is deposited on it by an oxidation-reduction reaction, after which it is electroplated with copper. The coated face is covered with wax to protect it, while any undesired coating on other faces is removed by dissolving it with nitric acid. If only a strip of silver is required, cuts are made through the wax and metal coating, and are so spaced that the desired strip is obtained. After all surplus coating has been removed, the wax is removed. Then if the coated face which remains is not to be cemented, it is protected with an application of lacquer. In the case of the ocular "A" prism (Figures 115 and 116), no lacquer is applied because the face containing the silvered strip is subsequently cemented. A standard type of milling machine equipped with a modified cutting head carrying a specially sharpened cutting tool is used for making these cuts.

The efficiency of the silvering procedure is measured by the degree of adhesion obtained between the glass face and the silver. Further, when only a strip of silver is required, the texture of the deposited silver must be such that it will be possible to cut an even, regular edge. The degree of adhesion of the silver to the glass prism face depends upon several factors, the most important of which is the cleanliness of the face. The texture of the silver coat varies with the conditions under which it is deposited.

SILVERING PRISMS

Preliminary Inspecting. — Prism faces, which are to be silvered, are cleaned with cheesecloth moistened with alcohol, and are then inspected thoroughly for pits, scratches, or poor finish. The prism is held in the beam of a microscope lamp while its surface is examined with a magnifier. A 10-power magnifier with a 500-watt microscope lamp is used for inspection of ocular "A" prisms, and a 5-power magnifier with a 120-watt microscope lamp, or a 250-watt incandescent lamp, is used for other prisms. Except in the case of the ocular "A" prism, whose faces must be highly polished and entirely free of defects—since the prism is placed in the focal plane of an instrument—very slight scratches or pits of face may be permissible.

Cleaning.—After inspection, the faces that are to be silvered must be thoroughly cleaned. A photographic-type tray, of a size depending on the size and number of prisms to be silvered at one time, is filled with enough distilled water to cover the prisms. Cleaning should be done at a sink equipped with a mixing valve and supplied with hot and cold running water. Some dry calcium carbonate is picked up on a wet swab and rubbed gently over the face to be silvered, the prism being held in one hand and the swab in the other. The rubbing is done with a circular motion, making sure to rub all the way out to the corners of the prism, since the bevels as well as the face itself must be cleaned. Once the cleaning process has begun, the face to be silvered must not thereafter be touched by anything but the cleaning materials.

When the face is cleaned, it is held under lukewarm tap water until the calcium carbonate is entirely washed off. Cleanliness can be tested by wetting the face under the tap, then removing the prism, and holding the face in a horizontal position. If the face is not clean, water will stand on the surface in small puddles. If it is clean, water will cover the face from one bevel to the other, leaving no puddles. Before the prism can dry, it is immersed immediately in the tray of distilled water, taking care that the face to be silvered does not touch the bottom of the tray.

Silvering. *Apparatus.*—Three separatory funnels (see Figures 1801 and 1802) are attached to a ring stand so that their contents can be allowed to drip into a 4-inch-diameter, 6-inch-stem funnel mounted directly below. A 4-inch-diameter, 3-inch-stem funnel, used to filter solutions into the three separatory funnels, is placed in a ring at the top of the stand. A wooden block placed on a ring under the 6-inch-stem funnel supports the holding fixture, which in turn holds the face horizontally while it is being silvered. The entire apparatus is supported above a bowl, pan, or sink which is used to collect the spent solutions. When silvering a number of prisms simultaneously, the 6-inch-stem funnel is oscillated by means of a converted electric windshield wiper so that the solutions are applied over the entire area to be silvered. Two 250-cc beakers, filled with distilled water, are placed to one side of the ring stand, and in one beaker is placed a pair of glass tweezers, a swab stick, and a pair of metal clamps. One 1000-cc beaker containing tap water, and a 1000-cc beaker containing absorbent cotton are also placed within easy reach.

Silvering Operation.—After the apparatus and the tray with the prisms are ready, the first separatory funnel is filled through the short stem funnel with distilled water. Then the reducing solution and silvering solution ('Brashear's Formula') are filtered into the second and third separatory funnels, respectively. The filter used for the reducing solution is replaced with a clean filter after washing the funnel with distilled water. After the separatory funnels are filled, the solutions are allowed to drip into the oscillating funnel in the proportion of two drops of silvering solution to one drop of reducing solution, while sufficient distilled water to keep the entire face wet is dropped from the other separatory funnel. Water is added because any silver that adheres to a dry spot will leave a yellow stain.

After the drippings are properly regulated, the prisms to be silvered are picked up with the glass tweezers and placed in a holding fixture which, in turn is placed on the work block. (In Figure 1801 is shown a holding fixture for several ocular "A" prisms. Figure 1803 shows another type of holding fixture which is used when silvering two faces of two penta prisms.

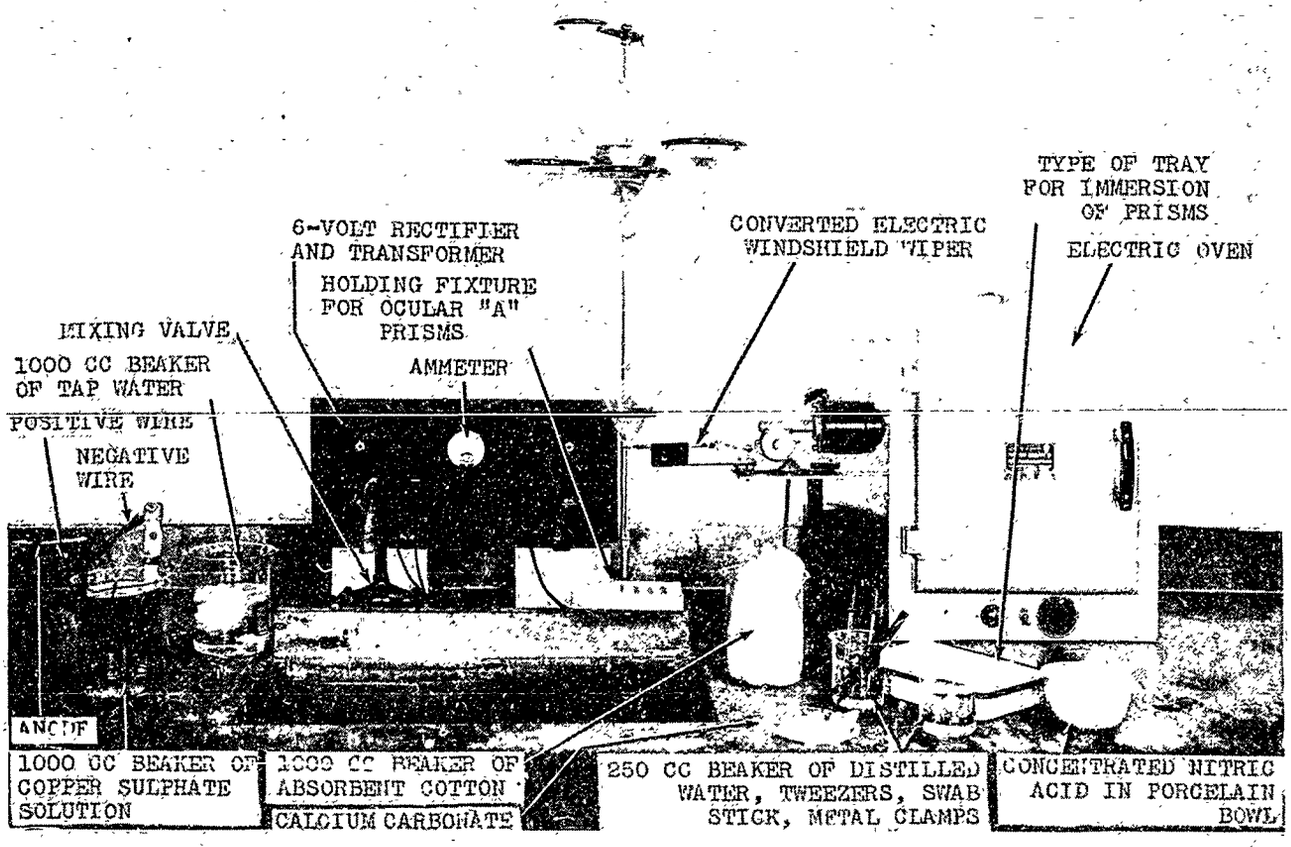

Figure 1801.—Apparatus for Silvering and Copperplating Prisms.

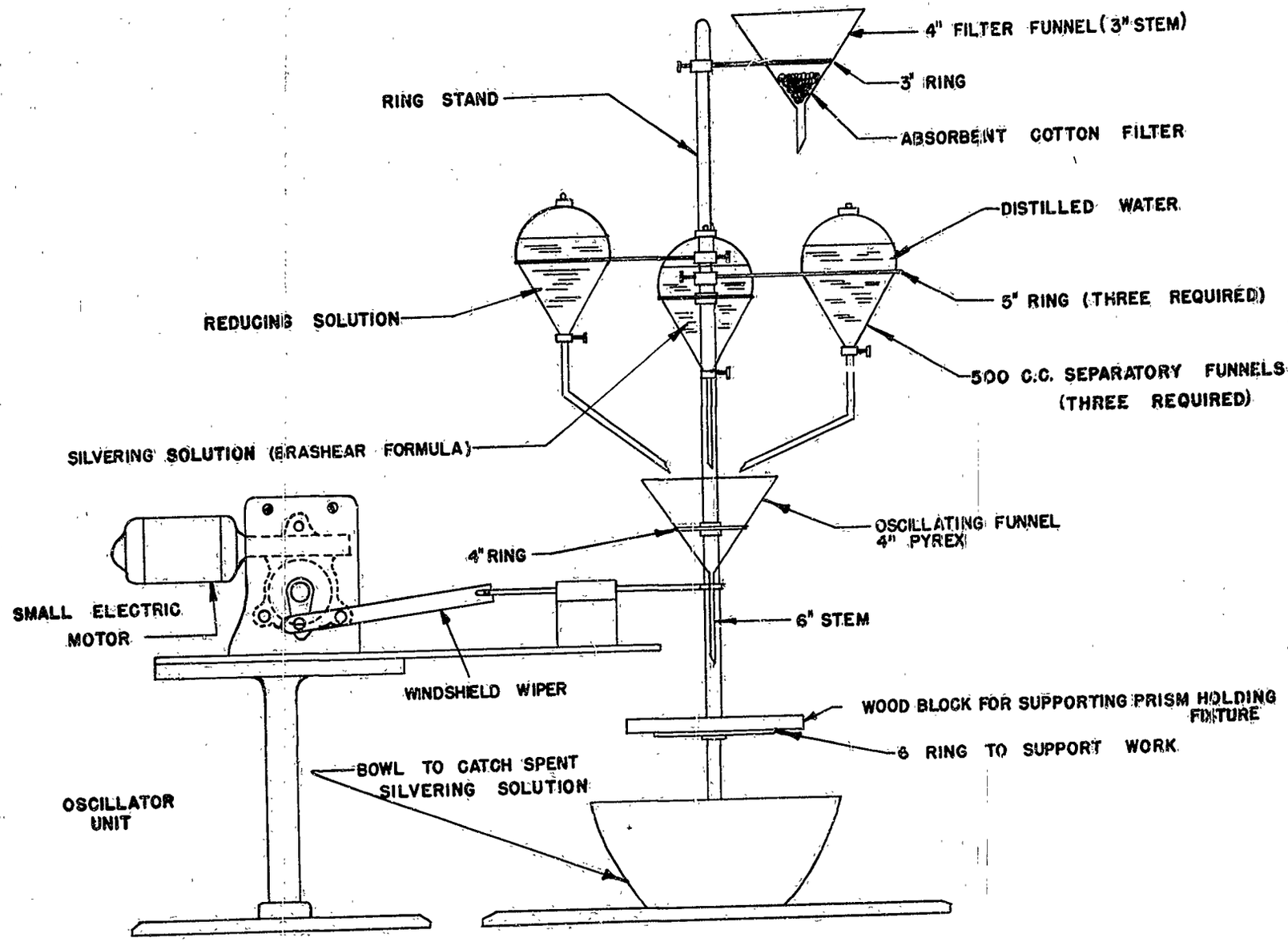

Figure 1802.—Apparatus for Silvering Prisms.

The latter fixture permits two penta prisms to be rotated back and forth so that first one pair of faces, and then another pair, are exposed to the silvering solution.) The solution is allowed to drip for about 2 minutes, when the silver coat should begin to appear as a mirror-like surface. At this point, the surface of the silver is swabbed with distilled water at intervals of 1 minute, for the purpose of removing any precipitated impurities, dirt, etc. In this operation, the swab is worked gently back and forth over the surface of the silver, while the solution continues to drip. After each swabbing, the cotton is removed from the stick and placed in the 1000-cc beaker of tap water, the stick is rinsed in one of the beakers of distilled water, rewound with cotton, placed in the other beaker of distilled water, and is ready for re-use.

When the silver coat is thick enough, which usually requires about 8 minutes, it appears chalky white. The prisms are then removed singly from the fixture by means of the metal clamps, and placed under lukewarm tap water to remove any excess silvering solution. (In the case of penta prisms held in a fixture such as that shown in Figure 1803, the operation is the same, except that both prisms must first be removed from the fixture.) Since several prisms may be silvered consecutively, the silvering solution is allowed to continue dripping, and swabbing is continued at intervals of about 1 minute until the last prism is removed.

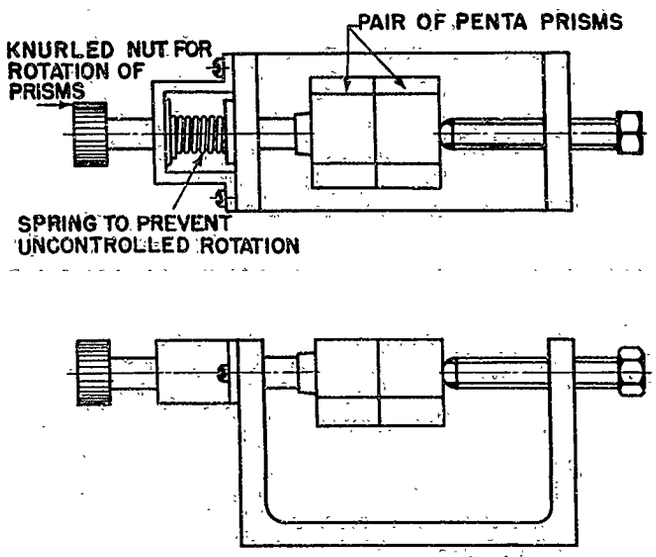

Figure 1803.—Holding Fixture for Turning Two Penta Prisms While Silvering.

Copperplating. *Apparatus.*—Direct current must be used in copperplating. The electrical apparatus (see Figure 1801 and 1804) consists of one 6-volt rectifier and transformer, with an ammeter in the 6-volt circuit. The positive wire from the rectifier is clamped to the copper anode which is immersed in an upright position in a 1000-cc beaker of copper sulphate solution. The prism is placed in the same beaker, with the silvered face, which is to be copperplated, facing the copper anode. The negative wire from the rectifier is then connected to the metal clamp which holds the prism. With penta prisms where two silvered faces are to be copperplated at one time, a semicircular copper anode (not shown in illustrations) is used so that the current can strike the prism from any angle within 180°. A tray of alcohol large enough to permit the prism to be immersed completely is also at hand.

Copperplating Operation.—The prism is rinsed with tap water, and is then immersed immediately in the 1000-cc beaker of copper sulphate solution. The metal clamp holding the prism is connected to the negative wire from the rectifier, the plating current of 1 ampere is turned on for 6 seconds, and pure copper is deposited electrolytically on the silvered face (or faces, in the case of a penta prism). Next, the negative wire is removed from the clamp holding the prism, and the prism and clamp are taken out and washed, first, under lukewarm water and, second, in pure grain alcohol, so as to remove all excess copper sulphate solution. All the copper sulphate solution must be washed off, because any crystals that remain will corrode both the copper and the silver coating. When the plating operation has been completed, the apparatus should be cleaned as discussed under "Cleaning the Apparatus" later in this chapter.

Heating the Prism.—After the copperplating process has been completed, the prisms are placed in an electric oven (see Figure 1801), together with a wide-mouth bottle containing a wax solution similar to that used for etching reticles (see Chapter 17). Both prisms and

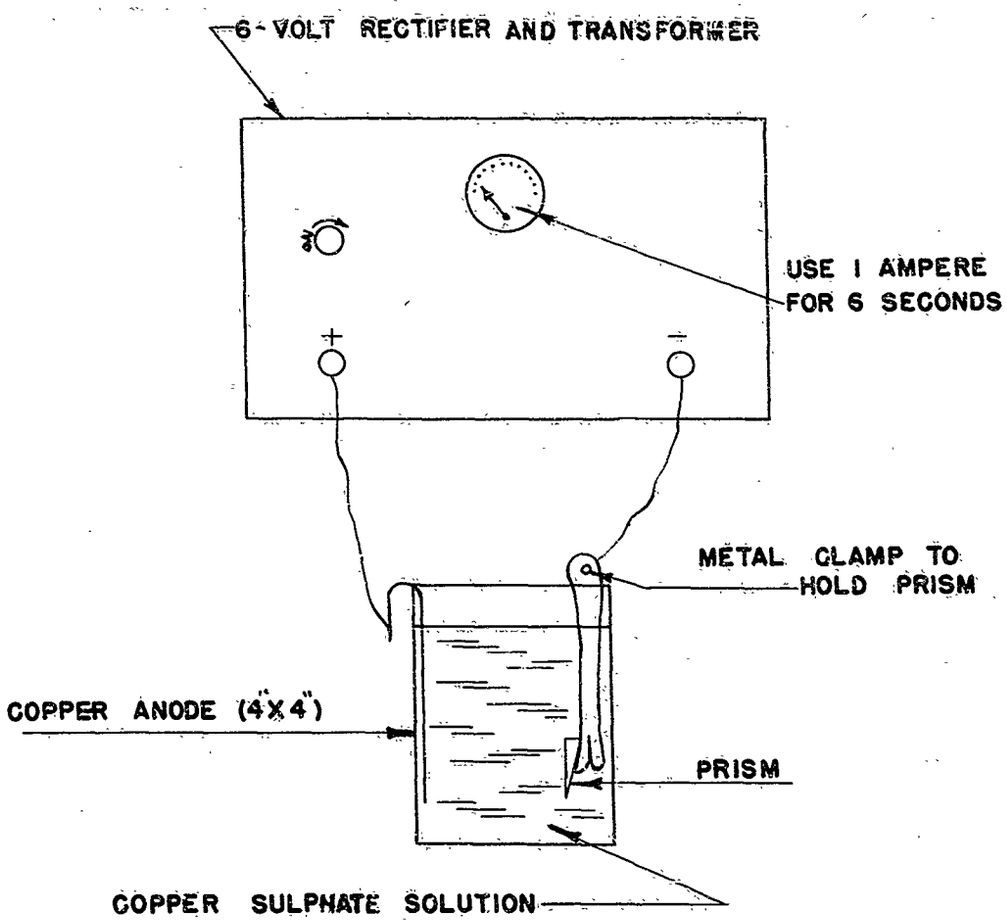

Figure 1804.—Apparatus for Copperplating Prisms.

wax are heated to approximately 115°F. About ½ hour is required to dry the prisms thoroughly and heat them sufficiently for satisfactory waxing.

Waxing the Prism.—There are two methods of applying wax to the silvered faces, one method being used on those faces which are to remain entirely silvered, and another being used when the silver is to be cut and removed so as to leave only a strip of silver on the face. In each case the prisms are removed one at a time from the oven just previous to waxing. In each case, also, care is taken that the prism and the wax are of the same temperature, so that the wax will adhere properly.

If the entire face is to remain silvered, the wax is applied over the silver-coated face with a ½-inch camel's-hair brush. If the silver on the face is to be cut, the prisms are dipped into the wax and withdrawn slowly, and at a uniform rate, so as to insure an even thickness of wax.

After application by either of the above methods, the wax on those surfaces which are not silvered is rubbed off with cheesecloth moistened with xylol.

Removing Excess Plating. — When the prism is cool, a porcelain bowl (see Figure 1801) is filled with concentrated nitric acid diluted with 5 to 10 per cent of water, and the surfaces of the prism which are not waxed are immersed for a few seconds in it until all excess plating is dissolved. The waxed faces must be kept out of the nitric acid, to prevent any pinholes forming in the wax. Next, the prism is washed in lukewarm water to remove the nitric acid, and is then dried with cheesecloth.

Inspecting. — The silvered face is illuminated with a 125-watt microscope lamp and inspected with a 5-power magnifier, (10-power

for ocular "A"), for uniformity, scratches, pinholes, pits, or stains, by looking at the silvered face through an open polished face of the prism. If the silvering is stained, the plating is removed by dissolving it in nitric acid and then repeating the plating operation, but if there are scratches or pits, not only is the plating removed, but the prism itself is again blocked, fine ground, and polished as described in Chapter 11. (Sometimes silvering reveals minor defects which previous inspection of the polished faces has not revealed.)

Finishing Operations. *Removing Wax Coating.*—After inspection, the wax coating is removed by soaking the prism in xylol. Finally, the prism is dipped in chloroform to insure the complete removal of all traces of wax.

Permanent Protective Coating.—When the plated faces are free of wax, a coat of shellac is brushed on, and after allowing 5 to 10 minutes for it to dry, a black spray lacquer is applied over the shellac. Any black, fast-drying spray lacquer that will not be injurious to the silver may be used. This second coat must also be allowed to dry.

Cleaning and Wrapping.—All unsilvered surfaces are cleaned with cheesecloth moistened with alcohol, dried, and the finished prism is wrapped in lens paper.

Cleaning the Apparatus.—The unused and spent silvering solutions are poured down the drain immediately after finishing each job. In addition, any prepared silvering solution (Brashear's Formula) should be discarded after 2 hours, because it may become explosive. The funnels and bowl are washed with nitric acid to neutralize any traces of solutions adhering to them. Unused reducing solution and distilled water may be allowed to remain in the separatory funnels, but the copper sulphate solution is poured back into its bottle. The water is drained off the cotton swabs, nitric acid is poured on them, and then they are rinsed thoroughly in tap water and thrown away. All beakers and containers are washed with distilled water.

SILVER CUTTING OCULAR "A" PRISMS

Sharpening the Cutting Tool. — A small amount of levigated alumina is mixed with about 6 drops of lard oil on a 5-inch 'Arkansas Hard Stone' to form a thin paste which is then spread over the entire surface of the stone. The cutting tool (see Figures 1805 and 1806), is held with the longest flat surface on the stone as illustrated in Figure 1807(a), and moved back and forth across it for about ten strokes, to remove rust or any blemishes on the surface of the tool. Next the side of the tool is held on the stone (Figure 1807(b)), so that the cutting edge makes an angle of about 20° with it and the tool is moved from side to side for about twenty strokes. Then the tool is turned on its other side and this operation is repeated. The tool is tapered in this fashion so that the resultant cut edge of the plating will be beveled slightly to give it additional strength.

Now the tool is inserted in a sharpening fixture (see Figures 1805, 1808, and 1809), and drawn up until the cutting edge clears the bottom of the fixture. This fixture is composed of a central and an outer part. A central part, which has a setscrew to clamp the tool, can be rotated in the outer part, and is held in the proper position by a setscrew in the outer part. The central part must be adjusted so that the cutting edge of the tool will be ground perpendicular to its longitudinal axis. The fixture is set on the surface of the stone. The cutting edge of the tool is then lowered gently until it touches the surface of the stone and the setscrew in the central part tightened so that the tool is held firmly, but is still able to slide up and down in the fixture. When this has been done, the tool and fixture are in position for sharpening. The right thumb is then pressed lightly on the top of the cutting tool which projects from the fixture, and the fixture is grasped with fingers of both hands as shown in Figure 1810. The fixture with the tool is moved across the surface of the stone for twenty to thirty strokes, taking care that the pressure on the tool and fixture is equal, to prevent the fixture from riding up on the tool during the stroke. After the tool has been ground, both the bottom and beveled surfaces must show sharp corners and edges when ex-

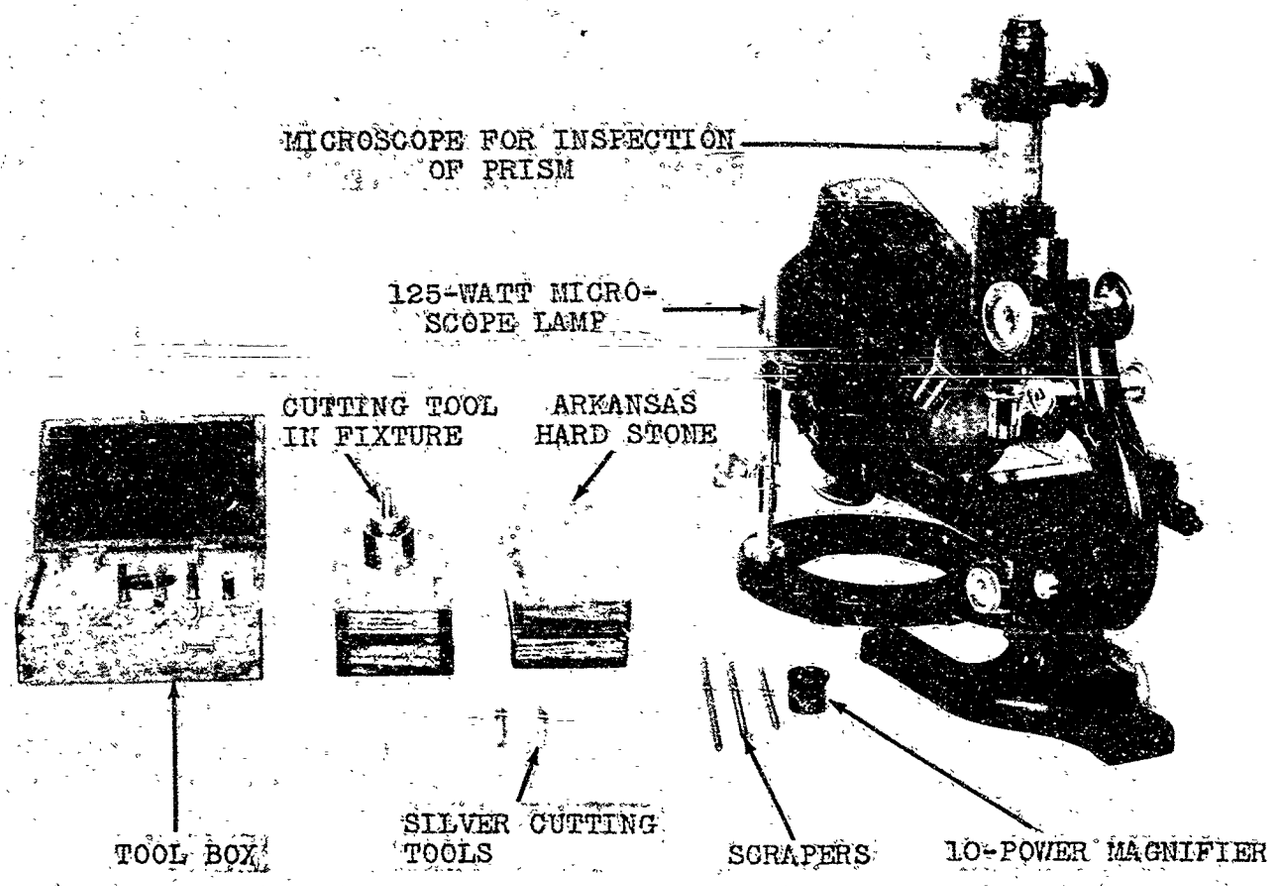

Figure 1805.—Equipment Incidental to Silver Cutting and Silver-cutting Inspection.

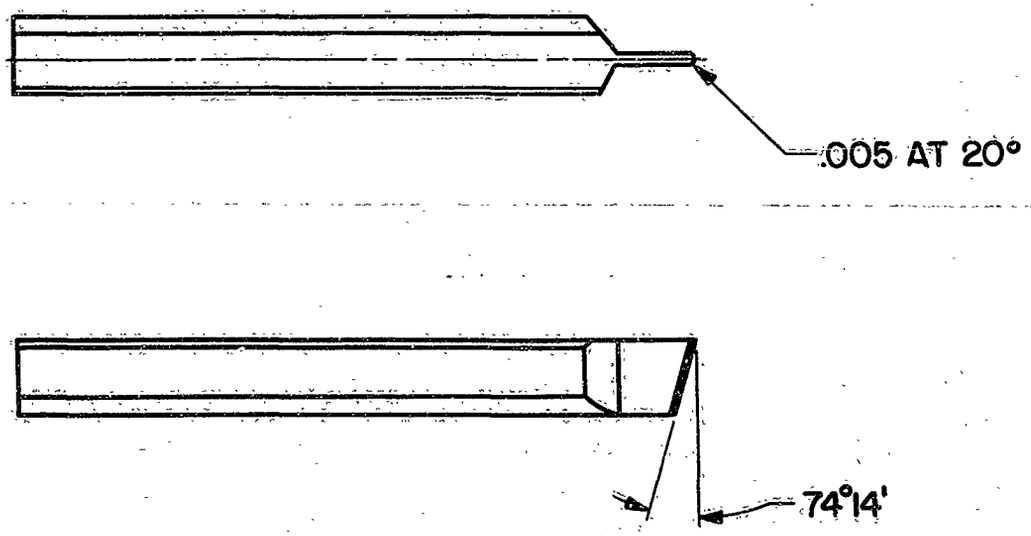

Figure 1806.—Tool Used for Silver Cutting.

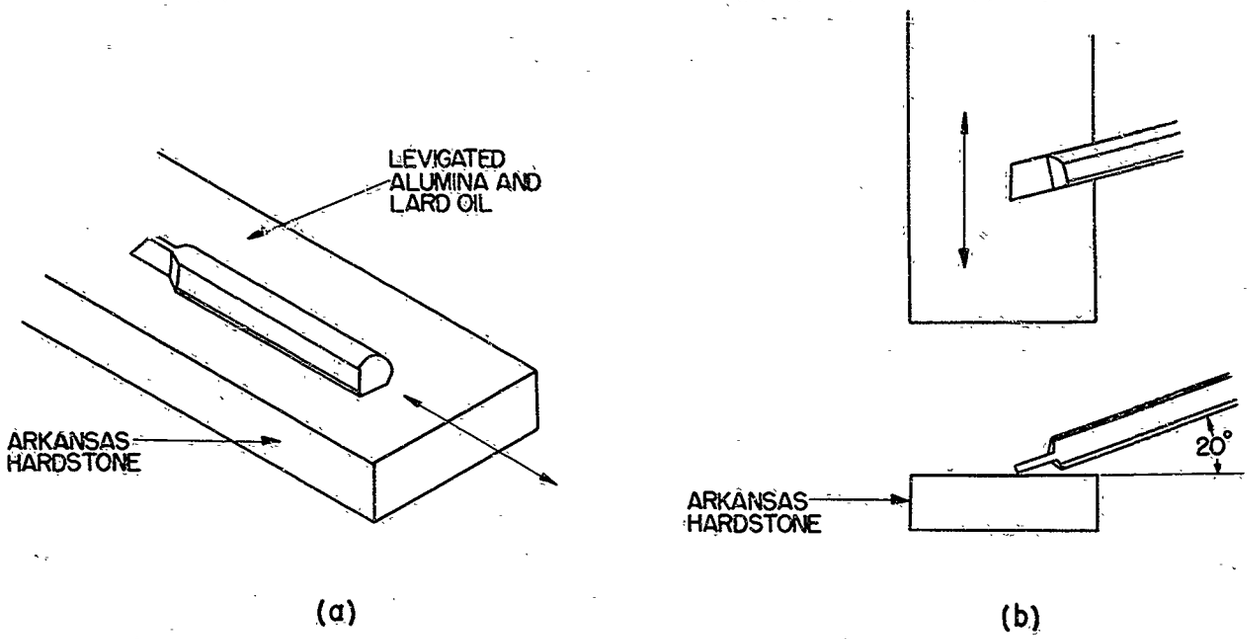

Figure 1807.—Positions of Cutting Tool for Sharpening.

amined with a 10-power magnifier. Now the whole sharpening operation is repeated, using a second Arkansas Hard Stone, except that only 1 drop of lard oil is used in making the thin paste. Once more, the edges must be straight, the corners sharp, and the surfaces uniformly smooth when examined with a 10-power magnifier.

Setting Up the Machine. — The tool is mounted in the cutting head of a bench miller, modified as shown in Figure 1811. The table of the miller is lowered, and the counterweight of the cutting head is thrown all the way back —thus raising the cutting tool. Next, the vise (Figure 1812) is mounted on the miller table and set at an angle of about 5° to the table by

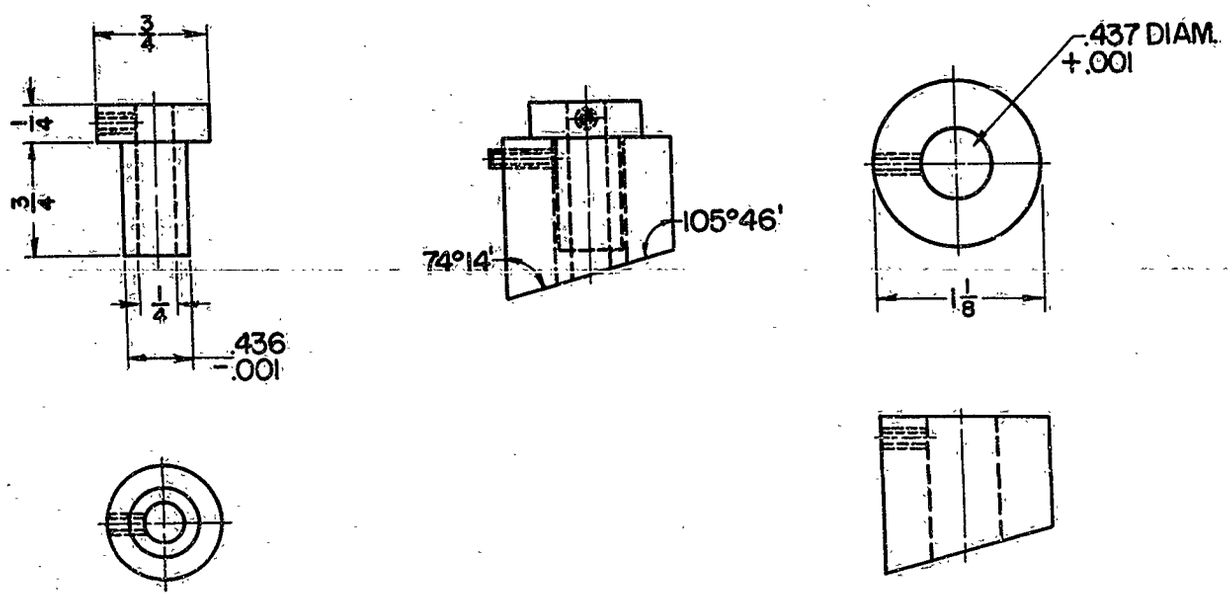

Figure 1808.—Fixture for Holding Tool While Sharpening.

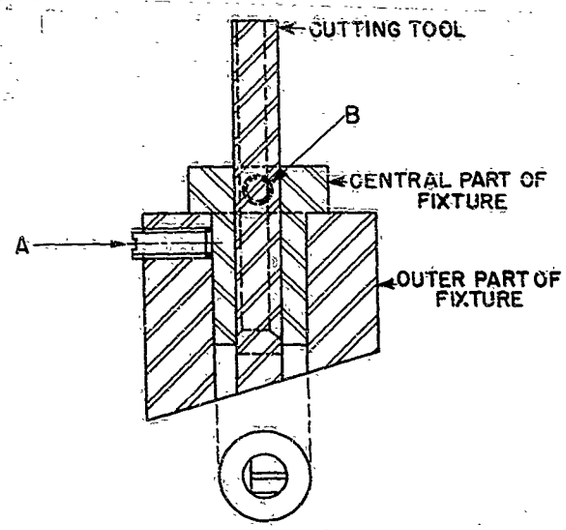

WHEN TOOL IS POSITIONED AS SHOWN IN THE TWO VIEWS, SET SCREW A IS TIGHTENED TO HOLD THE JIG IN POSITION, AND SET SCREW B IS TIGHTENED TO A LIGHT CONTACT WITH TOOL.

Figure 1809.—Position of Tool in Sharpening Fixture.

turning the leveling thumb screws with the right end of the vise about 5° high.

Then the ocular "A" prism (see Figures 115 and 116"A") is set in the vise, with paper under the prism to protect it from scratching, and held by tightening the clamping thumb screw.

Cutting the Silver.—The tool, carried in the cutting head, is lowered carefully so that it rests on the surface of the prism and just clears the bevel at the front of the prism. Now the silver is cut by drawing the table towards the operator steadily and continuously until the cutting tool reaches a point just short of the bevel on the back of the prism, when the table is stopped and the cutting head is raised. All the sighting for this operation is done with the large right-angle reflecting prism shown in Figure 1811. This gives a side view of the cutting tool so that the operator can see where to place the tool for starting the cut, and when to stop the cutting and raise the tool.

The prism is taken out of the vise and inspected under a 100-power microscope, using a 125-watt microscope lamp (see Figure 1805). The silver plating must be cut so that its edge will appear straight, smooth, and without any irregularities. A ragged edge can be corrected by an additional cut, but care must be taken to remain within the specified tolerance.

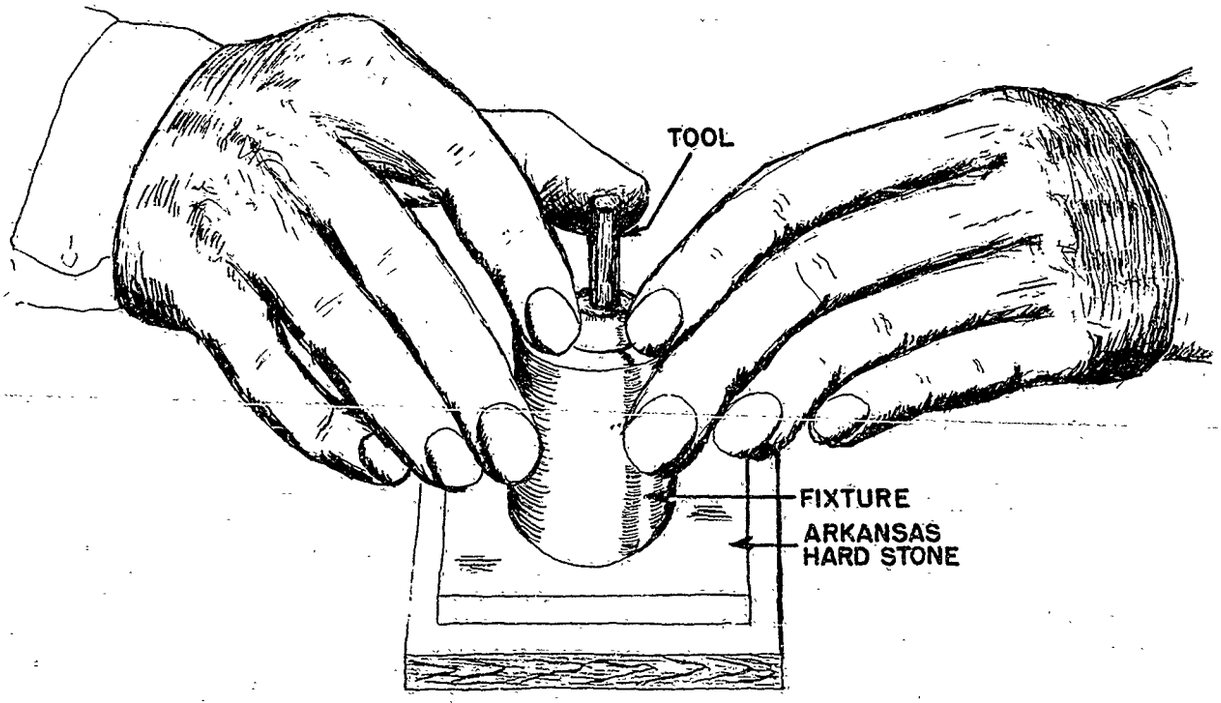

Figure 1810.—Position of Fingers While Sharpening a Cutting Tool.

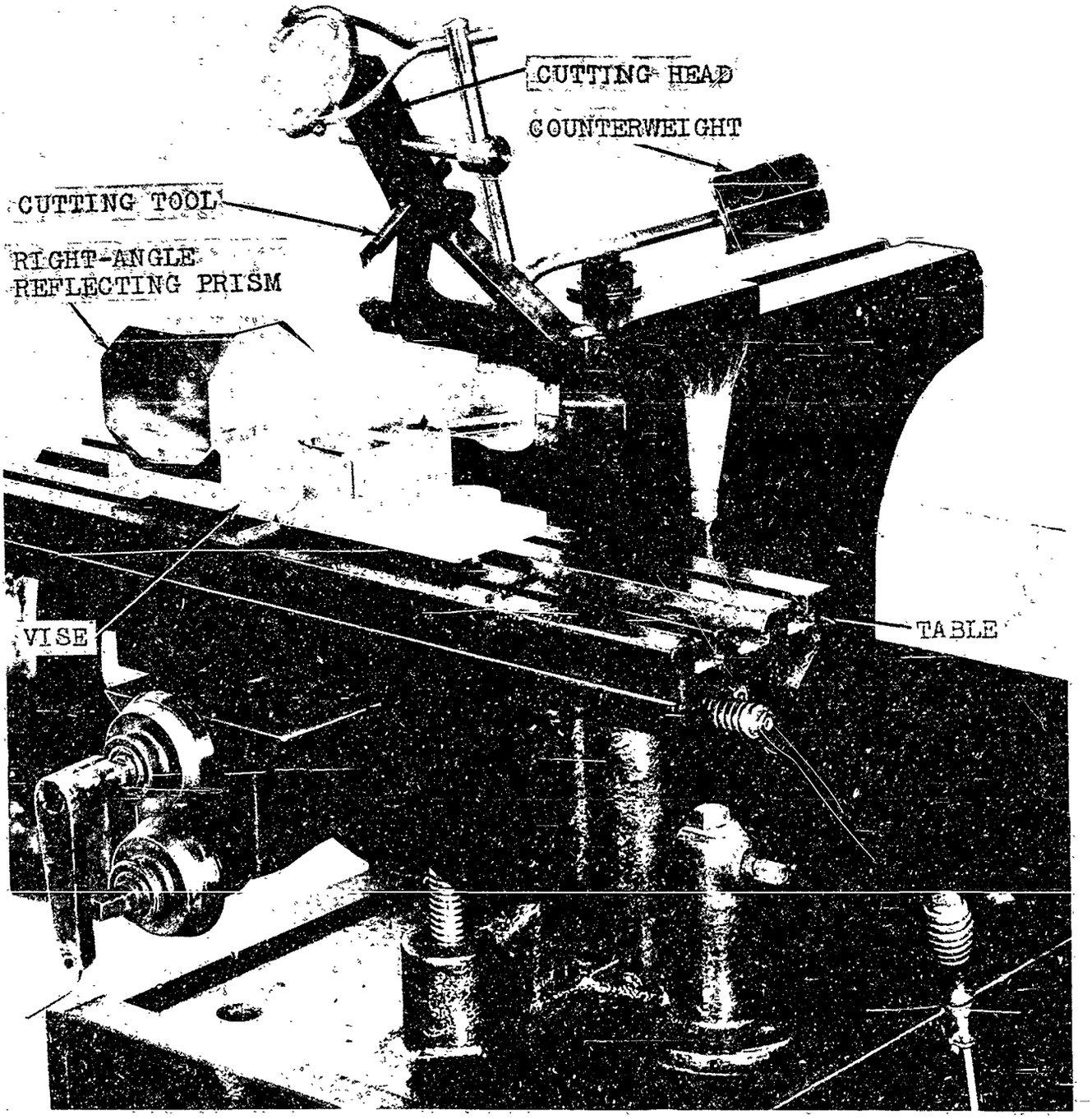

Figure 1811.—Bench Miller Set Up for Cutting Silver on the Side Face of an Ocular "A" Prism.

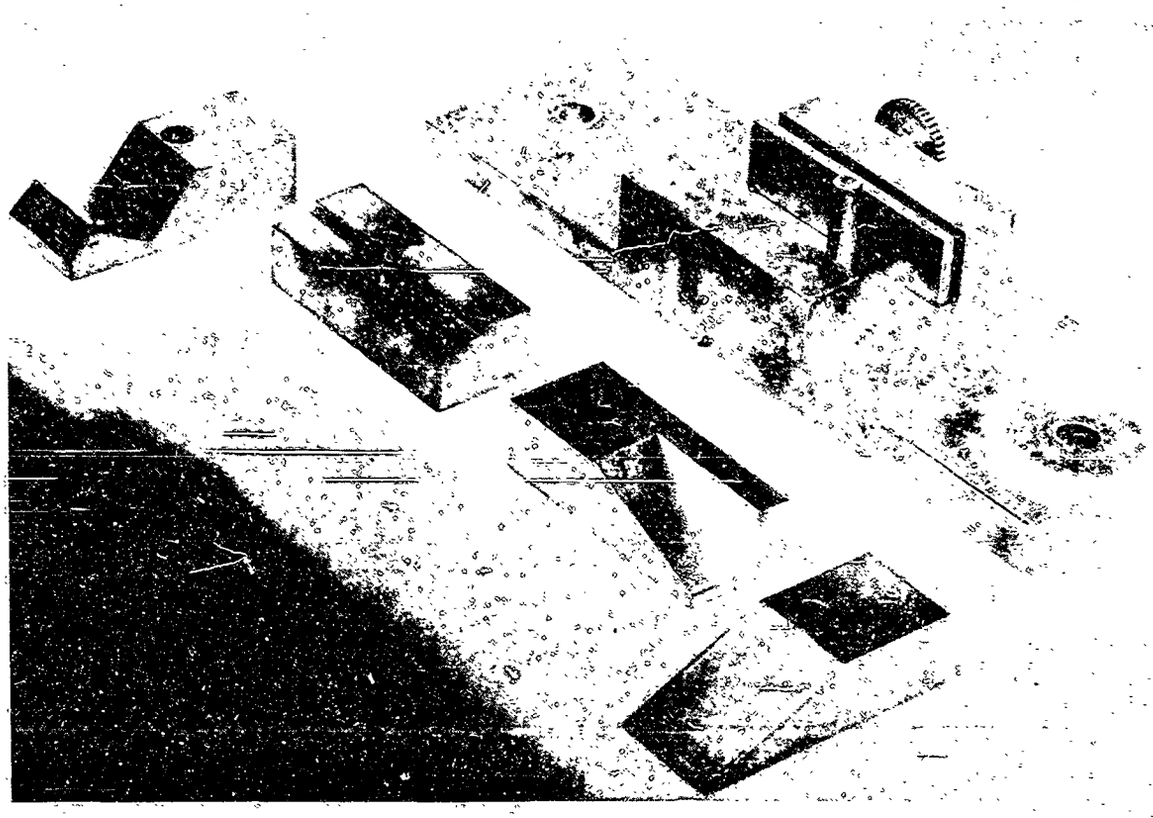

Figure 1812.—Vise and Inserts for Holding an Ocular "A" Prism for Silver Cutting.

The other side of the silvered strip is cut in the same way, by first tilting the vise in the opposite direction so that it makes an angle of about 5° with the table, with the left end of the vise high. The table of the milling machine is moved so that the second cut, measured to the lower left-hand corner of the tool, will be at the proper point. The cutting operation itself is just like the first one and, of course, both cuts must be equally sharp.

When the cutting edge of the tool becomes worn the operator can change the angle of the tool, thereby restoring its cutting effect, by raising the table and pulling the counterweight toward him.

Removing Excess Silver.—A strip of scotch tape is placed on the surface of the silver and copper to be removed, and pressed down firmly to avoid wrinkling. Then, because the plating adheres to the tape more than it does to the glass, the tape is pulled up and the plating under it is removed. It is convenient to hold the prism in the vise for this operation. Small spots of silver and copper plate that remain are removed with a hand scraper (see Figure 1805), with the aid of a 10-power magnifier. If the required strip of plating is touched by the scraper it will be nicked and the prism will have to be completely cleaned and re-silvered.

When all excess silver has been removed, the prism is washed in chloroform to remove the protecting wax, and then it is set on a paper towel to dry. If, upon re-examination, the prism is good, it is ready for cementing. On the other hand, if it is defective, the silvering must be removed and the defects corrected, either by re-silvering, or re-grinding and re-polishing.

CHAPTER 19

EVAPORATED FILM COATINGS

	Page No.
Preparing Elements.	1902
Cleaning.	1902
Drying.	1902
Dusting.	1903
Removing Adsorbed Substances.	1904
Handling Vacuum Coating Equipment.	1904
Preventing 'Wilson Cloud' and Condensations.	1904
Keeping High-vacuum Equipment Dry.	1905
Avoiding Back Streaming of Oil Vapors.	1905
Avoiding Evaporation Contaminations.	1905
Low-reflection Films.	1906
Preparing Magnesium Fluoride.	1906
Coating Process.	1906
Controlling Film Thickness.	1909
Spattering.	1910
Testing.	1911
Method Used by Minneapolis–Honeywell Regulator Company.	1911
Reflecting Films.	1914
Coating Process.	1914
Controlling Film Thickness.	1915
Spattering.	1915
Testing.	1915
Precaution when Coating More than One Surface.	1916
Coating Faces Successively.	1916
Coating Faces Simultaneously.	1916
Coating Other Faces with Chemically-deposited Silver.	1916
Coating Other Faces with Evaporated Metal.	1916
Decoating.	1917

The practice of coating optical elements with thin films formed by evaporating various materials on their surfaces has been introduced in the field of precision optical elements only recently. The operating practices and techniques that are used are still under careful study and constant development. For this reason, the procedures that are discussed in this chapter are only a part of those that are currently in use, and no attempt has been made to describe all. In general, thin coatings are applied to optical elements either to reduce reflection of light at the surface that is coated, or to serve as beam splitters, or reflecting surfaces that will reflect a maximum of light. In the latter case, the resulting element is known as a front-surface mirror, because when coated with an evaporated metal film, the element merely serves as a support for the film, and the light rays that are reflected do not pass through the glass of the element, either before or after reflection.

PREPARING ELEMENTS

It is of the utmost importance that elements which are to be coated with evaporated films be cleaned thoroughly because the presence of grease or oil from fingerprints or other sources will cause poor adhesion, and specks of dust, dirt, or lint will cause pinholes in the film. In preparing a surface for coating, it is comparatively easy to clean the glass, but it must be dry as well as clean. There are many materials that can be used to remove the dirt and grease from a glass surface, but if the solvent itself—whether it be water, alkali, soap, or other material—is not also completely removed, either it will destroy adherence or stain the evaporated film, just as surely as would the original dirt or grease. Therefore, the cleaning reagent or series of reagents must not only remove the original dirt, but must also be such that they themselves may be completely removed, so that the glass surface is left as free from any foreign matter as possible. A china-marking pencil should never be used on a surface to be coated since, at present, there is no method known, except re-polishing, which will remove this kind of a mark so that it will not affect the coatings.

The procedure for preparing elements for coating may be divided into four basic operations—cleaning, drying, dusting, and removing adsorbed substances. These operations are performed in the order named.

Cleaning.—The purpose of cleaning is to remove oil, grease, dirt, and other foreign matter that may be adhering to the surface of the glass. The general types of cleaning materials and methods which may be used are discussed in Chapter 23. A common method is to wash the glass in a soap or detergent solution, usual detergents being 'Aerosol OT', 'Orvus paste', and 'Dreft'. Some operators prefer to add alkalis such as trisodium phosphate or ammonium hydroxide. These materials are usually used as 2 or 3 per cent solutions in warm water. Other operators use mild abrasives, such as precipitated chalk, finely divided clay, or magnesia suspended in water—either alone or mixed with alkalies or detergents. It is customary to give each element individual attention by rubbing the glass surface lightly with absorbent cotton, or a soft cloth wet with the cleaning solution.

Drying.—The next operation is to remove the cleaning solution and dry the element. A thorough rinse in ordinary running water, when necessary, warm and filtered to remove fine particles, will remove the solvent satisfactorily. In addition to this rinse, it may be necessary to wash the elements in distilled water, depending on the method that is to be used for drying them.

There are several methods for drying the elements, after the solvent has been washed off with water. One method is to use a distilled water rinse, and then flood the surface with a fast-drying water-miscible solvent which is permitted to evaporate from the glass surface in such a thin film that no stain is left. One method of accomplishing this evaporation is to warm the element by rinsing in warm distilled water, set the element in a rack or holder and flood it with re-distilled acetone, using a wash bottle or other suitable method. Most of the acetone drains off rapidly, and the remaining portion will evaporate from the surface of the warm element.

Another method is to wash the elements in ordinary water, and then place them in racks, and suspend the racks in the vapors of re-fluxing isopropyl alcohol. In using this method, it is necessary to leave the elements in the hot isopropyl alcohol vapors long enough to warm them to the point where the alcohol will evaporate rapidly when the rack is removed slowly. The holders must be arranged to support the elements at only the corners or edges, so that no drops of solvent will remain in contact with the polished surfaces. With either acetone or isopropyl alcohol, a single drop of solvent often collects at the bottom of the element and, if left to evaporate, is certain to produce a stain. This stain can be avoided if the drop is removed by blotting with a piece of clean cheesecloth, as soon as the element is removed from the acetone or isopropyl alcohol vapor.

A third method is to rub the glass surface with a cloth wet with the solvent, and then wipe the solvent off with a dry cloth. This method requires much more skill and time than the other methods.

Still another method is to remove the distilled water from the lens surface without using any other material to aid in drying. To do this without producing stains, most of the water is removed by mechanical action, leaving only an extremely thin and fairly uniform film to evaporate. Some operators remove the element from a distilled water rinse and simply blow off the excess water with clean compressed air. With the proper technique, the water can be removed fast enough so that a clean surface is obtained. The method is not so efficient when several polished surfaces on the same element are to be dried, because water blown from one surface is apt to run onto another surface and stain it. Instead of using compressed air, the same effect can be obtained by placing the element in a chuck or collet and spinning it at 1000 to 2000 rpm, while flooding the spinning surface with distilled water. The centrifugal action throws practically all of the water from the glass surface, and the remainder dries from an extremely thin film. While spinning may produce a cleaner surface than blowing with compressed air, the method may not be sufficiently rapid for production work.

An entirely different method of drying is to cover the polished surface with an aqueous suspension of a finely divided solid material, allow this to dry, and then rub off the solid material. To be suitable for this purpose the material must be free from grit, be considerably softer than the glass surface, and must not tend to charge the particles electrostatically so that they will adhere to the glass surface, as this makes them very difficult to remove. Any good grade of precipitated chalk may be used in this method. An effective form, known as 'Wet-me-Wet' is prepared by B. T. Babbitt Company. This consists of a soft flannel bag filled with precipitated chalk. In using it, the bag is soaked in water and rubbed over the polished surface. The chalk will not cake as long as the bag is kept wet.

The chalk is removed from the surface as follows: the surface is allowed to become almost dry, and is then rubbed off with a soft cloth, not necessarily lintless, such as cheesecloth or batiste. If these cloths are changed frequently, most of the dust will stay in them and little will escape into the atmosphere. The last traces of chalk are removed with a lintless cloth, such as 'Selvet' cloth, imported from England, or acetate rayon napkins. This last cloth must be meticulously clean, so as not to re-contaminate the clean surfaces.

Dusting. — The coating room itself should be kept as clean as possible by regularly scrubbing the floor and other dust collecting objects. In addition, filtering the air with a 'Precipitron' or other effective method is advisable. After the elements have been cleaned, dried, and set in racks, they should be placed in the bell jar of the coating machine as soon as possible in order to reduce to a minimum the amount of lint and dust that will settle on their surfaces. If the elements must be stored before placing them in the machine, they should be kept in a cabinet that is as nearly dust-free as is practicable.

Despite all precautions, however, it will still be necessary to remove dust just before coating. This may be done by blowing the dust off the polished surfaces with a clean, low-pressure air stream or with a suction tube with a

little brush around it, the brush being used to unseat the dirt and the suction to carry it away. Both of these methods work fairly well. Unfortunately, merely brushing off the dirt with a soft brush, builds up an electrostatic charge so that some of the dust which is removed flies back onto the elements and sticks there. In addition a brush will often introduce more oil or dirt onto the glass surface than it takes off.

A method that has been used with some success at Frankford Arsenal to remove the last particles of dust utilizes the brush discharge of a high-voltage, high-frequency current from a Tesla coil. In this method a complete rack of optical elements ready for coating has been cleaned thoroughly in from 1 to 2 minutes, the discharge wire being close to the surface to be dusted.

Removing Adsorbed Substances.—The last step in preparing the elements, before actual coating can be started, is to remove any remaining molecules of foreign material such as solvent, water, detergents, air, and the like that are adsorbed on the surface of the glass. These adsorbed substances will be removed partially but not completely by the mere evacuation of the system during the coating process. Auxiliary methods depend on heating, or on an electronic bombardment from a high-voltage glow discharge while the elements are in the vacuum chamber. Heating is more effective on glass than electronic bombardment, but it cannot be used on solid plastic elements, or with cemented lenses that will not stand heating up to 400°F., nor with some types of evaporated metal mirrors since they will 'bloom' or become hazy if the reflecting metal is deposited on glass which is too hot.

The effects of the electronic bombardment or high-voltage discharge produced with potentials of from 3,000 to 15,000 volts and applied in the vacuum at pressures of 0.10 to 0.001 mm of mercury, are probably similar to those produced with the Tesla coil mentioned earlier and in addition, the electronic bombardment provides a final cleaning action by removing adsorbed substances. However, the Tesla coil sparking method cannot be used where metal films have been deposited previously, because it will cause a great many pinholes. Although many believe that using a glow discharge is an essential part in making evaporated metal mirrors, excellent ones have been made at Frankford Arsenal without its use.

HANDLING VACUUM COATING EQUIPMENT

In addition to preparing the surfaces of optical elements before filming in high vacuum, it is necessary to assure proper operation of the vacuum equipment so as to produce good films. Improper operation may re-contaminate the clean surfaces during the processing cycle, with the result that the films produced will not adhere well to the glass. Also, improper vacuum technique may affect the optical properties of the elements being coated.

Preventing 'Wilson Cloud' and Condensations.—The room that is used for vacuum coating should be as free as possible from dust by having the incoming air pass through a dust filter, or a Precipitron. In addition, it is advisable to take special precautions to eliminate Wilson cloud and moisture condensations in the vacuum chambers. Due to modern fast mechanical pumps, a cloud of water droplets may form inside the vacuum jar as a result of the sudden expansion of the air. This often lowers the temperature in the vacuum tank below the dew point, and thus forces condensation on the minute dust particles, ions, and colder surfaces within it. Many of these water droplets, and the dust on which they form, contaminate the previously-cleaned surfaces by settling on them during the early part of the vacuum cycle. The formation of this cloud can be prevented by using an auxiliary slow mechanical pump for a few minutes before the fast pump is turned on, or else by providing a slow leak path for the fast mechanical pump for a few cycles prior to opening wide the valve between the vacuum system and this pump.

If the vacuum system has become hot from several runs, this cloud is much less likely to form, because the air in the vacuum system is so hot that it is not cooled below the dew point when the mechanical pump is started. The non-

appearance of the cloud is deceptive, however, because condensations may still take place on any cold surface within the system, such as the surfaces of the optical elements being processed.

An effective method for eliminating the bad effect of the formation of condensations on the cool optical elements is to preheat the vacuum space and the cold glass for a few minutes, after the jars are loaded with the optical elements and before starting the fast mechanical pumps.

Keeping High-vacuum Equipment Dry.—Water vapor is adsorbed in great quantities by the surfaces of almost everything inside a vacuum system, and leaves these surfaces very slowly as the vacuum is produced. Besides interfering with the actual coating, it slows the process of obtaining the low pressures that are required. For this reason, the vacuum system should be kept dry at all times, whether or not it is in actual use. This may be done by keeping the system closed, even though it is not in use, and operating a mechanical pump continuously, or by placing a drying agent, such as phosphorus pentoxide, inside the equipment.

Rather than use high-temperature baking methods, it is interesting to note that the Carl Zeiss Company of Germany has found that the durability of magnesium fluoride films is increased by taking special precautions (such as the use of phosphorus pentoxide) to keep the vacuum system dry. The use of mercury diffusion pumps (instead of oil) requires liquid air traps which also help to keep the Zeiss system dry. The mercury vapor in the Zeiss system may be less likely to contaminate the optical surfaces than the vapor of the oils used in this country.

It is particularly necessary to keep the system dry when evaporating metals such as aluminum or silver, or when evaporating multiple-layer non-metallic reflectors where the initial film deposits are made on essentially unbaked glass blanks. Water vapor in small quantities lowers the adherence of the film to the glass, may cause ultimate blistering of the film, and makes it impossible to deposit successfully high-temperature baked magnesium fluoride protective overcoating onto metallic reflectors.

Avoiding Back Streaming of Oil Vapors.—In this country, oil-sealed rotary pumps are used as mechanical pumps, and oil diffusion pumps are used to produce the final low-pressure vacuum. This pumping system is fast and permits a short vacuum time-cycle.

In such oil pumping systems, there is danger of oil vapors getting into the processing chamber, because of faulty operation of the pumps or insufficient baffling between the pumps and the vacuum chamber. Even if only small amounts of oil vapor enter the vacuum chamber as a result of this so-called 'back-streaming' effect, they will contaminate the prepared optical surfaces during the evacuating cycle. This contamination causes low adherence of the film, and can ruin the entire run. For these reasons, it is important to keep the pumps in good condition, and to provide adequate and positive-acting baffles.

Avoiding Evaporation Contaminations.—Since it is essential to avoid contaminating the surface of any optical elements to be coated, it is obvious that all materials and components of the vacuum system must be such that they will not discharge evaporation impurities into the system, even when they are heated to the operating temperatures to which they are exposed. Such impurities would be deposited on the optical surfaces, either under the film or mingled with it. For example, any parts carrying electric currents should be large enough so that they will operate at low temperatures. The use of brass should be avoided, since the zinc component of this alloy has a low vapor-pressure. The same precautions should be taken with heating domes, spatter shields, and similar heated parts.

As an additional precaution for avoiding contamination of the optical surfaces, it is important that the interior surfaces of the vacuum system itself should be kept clean, and free from any grease, finger marks, or other volatile matter. One small area of grease or other foreign matter can ruin the optical surfaces that have been cleaned and prepared with much care. The damage from such contamination is done after the system has been closed

and the evaporation cycle has started, at which time there is nothing that the operator can do to correct it.

Contamination will usually reduce the hardness, adherence, and durability of an evaporated film, and it may also detract from the optical properties of the film. A very slight amount of evaporated metal mixed in (or evaporated under) a baked magnesium fluoride film may not affect its reflection-reducing properties, but can increase the light absorption of the film sufficiently to offset any gain in transmission which should normally result from application of the coating.

Contaminations occurring in the production of reflecting films of aluminum, silver, and the like, are apt to reduce the reflectance itself and make it impossible to apply baked magnesium fluoride over the metal film.

In order to have the vacuum system free from any material that may affect the quality and adherence of the film being evaporated, the same system should not be used for more than one type of coating without a thorough cleaning between operations. It is, however, practicable to evaporate aluminum or silver and then in the same jar to add a baked magnesium fluoride overcoating.

LOW-REFLECTION FILMS

When proper thicknesses of transparent films of certain non-metallic materials are applied to optical elements, the losses by reflection are reduced materially. Of the several materials in use at the present time for making low-reflection coatings, magnesium fluoride is used most widely, because of its durability and the satisfactory results that are obtained.

Preparing Magnesium Fluoride.*—It is especially important that the magnesium fluoride that is used as a source of coating material be chemically pure and free from chlorides. To prepare 100 grams of magnesium fluoride, 326 grams of analytical reagent grade of magnesium chloride are placed in a clean beaker, and just sufficient hot distilled water is added to dissolve it. This solution must not be boiled, since some magnesium oxide may be formed. The hot magnesium chloride solution is added to 140 to 150 cc of hydrofluoric acid in a platinum dish, little by little, the mixture being stirred with a platinum spatula after each addition. A gelatinous mass of magnesium fluoride will thus be precipitated. When all the magnesium chloride has been added, the mass must be evaporated to dryness. During the initial stages of the evaporation, which should be done in a sand bath, the mass must be stirred constantly to prevent the escaping vapor from causing the material to bubble and spatter. Semi-transparent crystals are formed first; these gradually turn white under prolonged heating. When all danger of bubbling has passed, the platinum dish can be removed from the sand bath and heated over an open gas flame, until all traces of acid are removed. This can be ascertained by holding a piece of moistened blue litmus paper over the dish and noting any change of color which occurs.

A test for residual chlorides is made by placing a small sample of the prepared magnesium fluoride crystals in a test tube and boiling with distilled water for a few moments. If a white precipitate forms on adding silver nitrate to this sample, it shows that traces of chloride still remain. To remove these traces, the crystalline mass is wetted thoroughly with concentrated hydrofluoric acid, and is then again evaporated to dryness, and another test is made for chloride. When the silver nitrate test shows that no chloride remains, the platinum dish and its contents are placed in an electric furnace and heated to from 800 to 900°C. so as to drive out any liquids or residual acids which might be occluded within some of the crystals.

Upon cooling, the crystals may be used in this state, or they may be ground in a mortar to any desired fineness. If a quantity of fluoride, other than 100 grams is desired, the amounts of chloride and acid should be adjusted proportionally. Analytical reagent grade chemicals of highest purity must be used, such as 'Baker's special analytical reagent grade hydrofluoric acid' (low in chlorine), or 'Baker's analytical reagent grade magnesium chloride special crystals' (low in alkali salts).

Coating Process.—(See, also, under "Precautions when Coating More than One Sur-

*This process was developed by Dr. Dean Lyon at the U. S. Naval Gun Factory, Washington, D. C.

face," this chapter.) Most machines that are used for coating elements by the evaporative process consist of a bell jar made of 'pyrex' glass about 18 inches in diameter, 27-inches high, and ⅜-inch thick, resting on a special table, and surrounded by a protective shield (see Figure 1901). A duplex machine equipped with two bell jars mounted on a single bench is illustrated in Figure 1902. In each of these machines, a counterbalanced hoist is attached to the top of the bell jar and is so arranged that the jar can be raised and lowered with little effort. The bottom edge of the jar is equipped with a gasket which seals the joint between the table and the bell jar. These machines are equipped with a mechanical pump and a diffusion pump which are used to exhaust the air from the jar, the mechanical pump being used to reduce the pressure to about 75 microns (0.075 mm) of mercury and the diffusion pump to reduce it further to a pressure of between 0.1 micron (0.0001 mm) and 0.01 micron (0.00001 mm) of mercury, at which pressures the coating materials will evaporate when properly heated, and will permit the molecules that are thus released to condense on the surfaces to be coated. In general, the higher the vacuum that is maintained in the bell jar, *i.e.*, the lower the pressure, the more satisfactorily the coating process will proceed. The material to be evaporated is held in a crucible or similar container (see Figure 1903). Because the material must be heated to a comparatively high temperature before it will evaporate, provision is made to do this electrically, by suspending a heating element of tungsten, or similar metal directly over, but not touching, the material in the crucible.

The elements that are to be coated are held in a so-called jig or metallic rack, usually brass or aluminum, with a radius of from 13 to 15 inches, although some operators use an aspherical rack whose radius is from 16 to 17 inches at the center and from 2 to 3 inches less at the edges. At Frankford Arsenal, an adjustable rack, which approximates the aspherical rack just mentioned, is used (see Figure 1904). The machine is arranged to support these racks near the top of, and inside, the bell jar; and further, since it is necessary that the elements be heated to prepare them for receiving the coating, an electrical heating unit is provided at the top of the bell jar for this purpose.

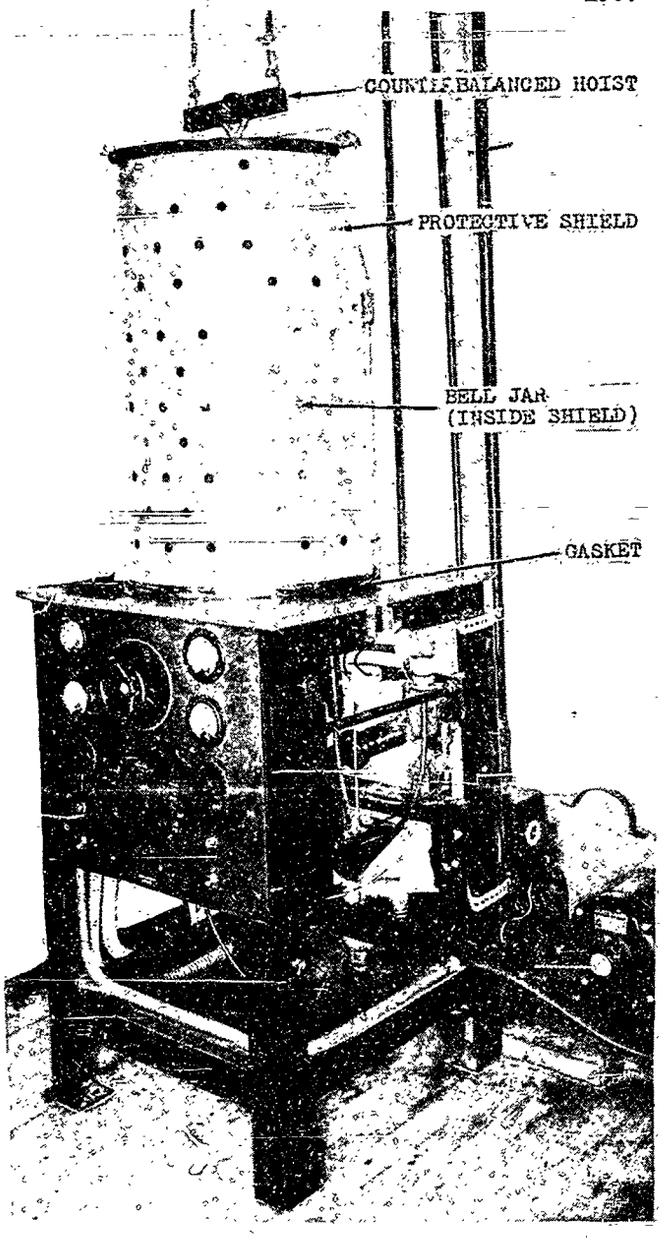

Figure 1901.—Single Evaporating Coating Machine for Producing Evaporated Films. (National Research Corporation).

While it is customary to support the elements in spherical or aspherical racks, satisfactory results can be obtained with flat racks, if a 'compensator' of suitable design is placed in the bell jar above the material container.

A variable-speed electric motor outside of the bell jar drives the compensator through a

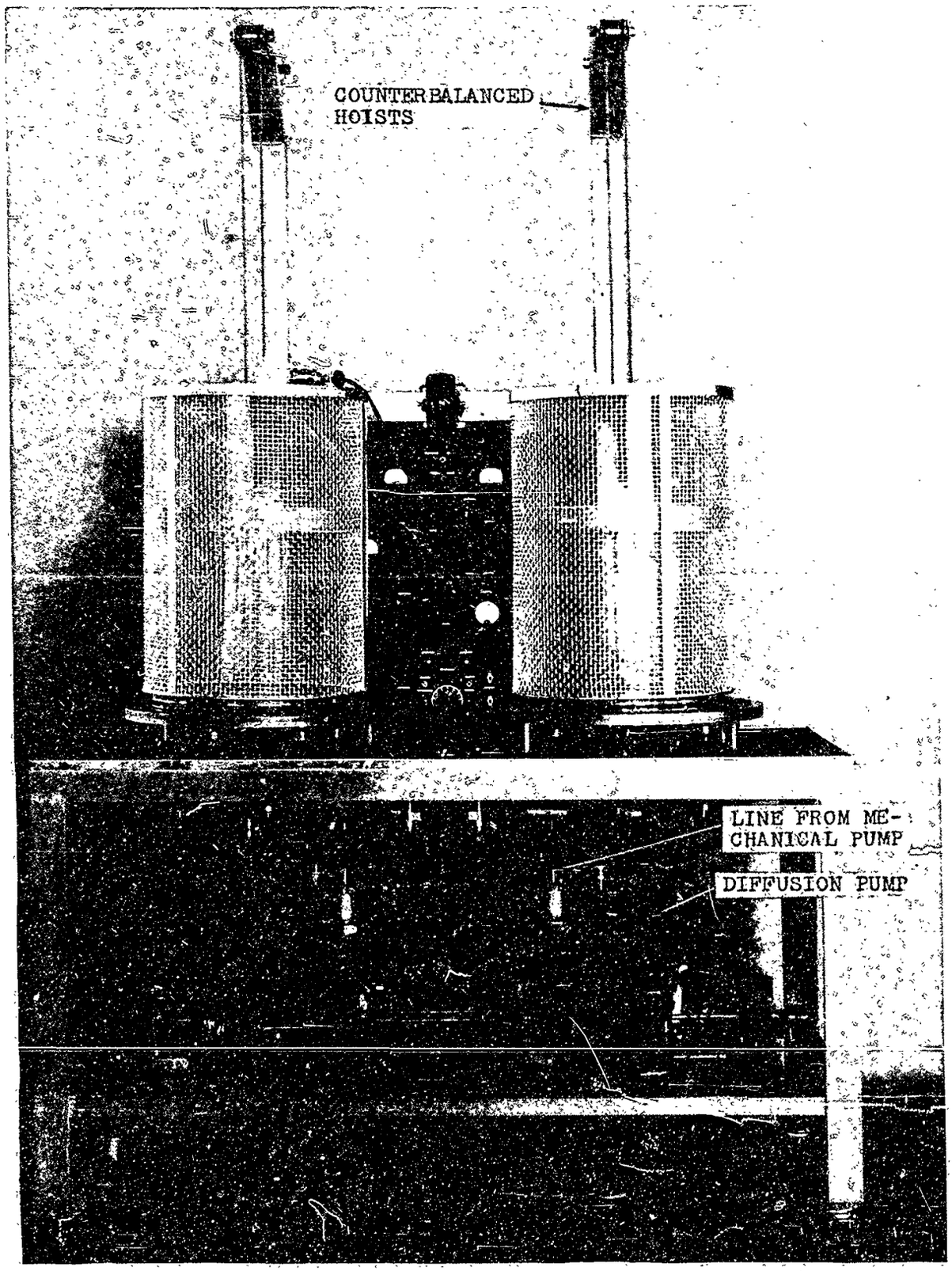

Distillation Products, Incorporated

Figure 1902.—Duplex Evaporative Coating Machine for Producing Evaporated Films.

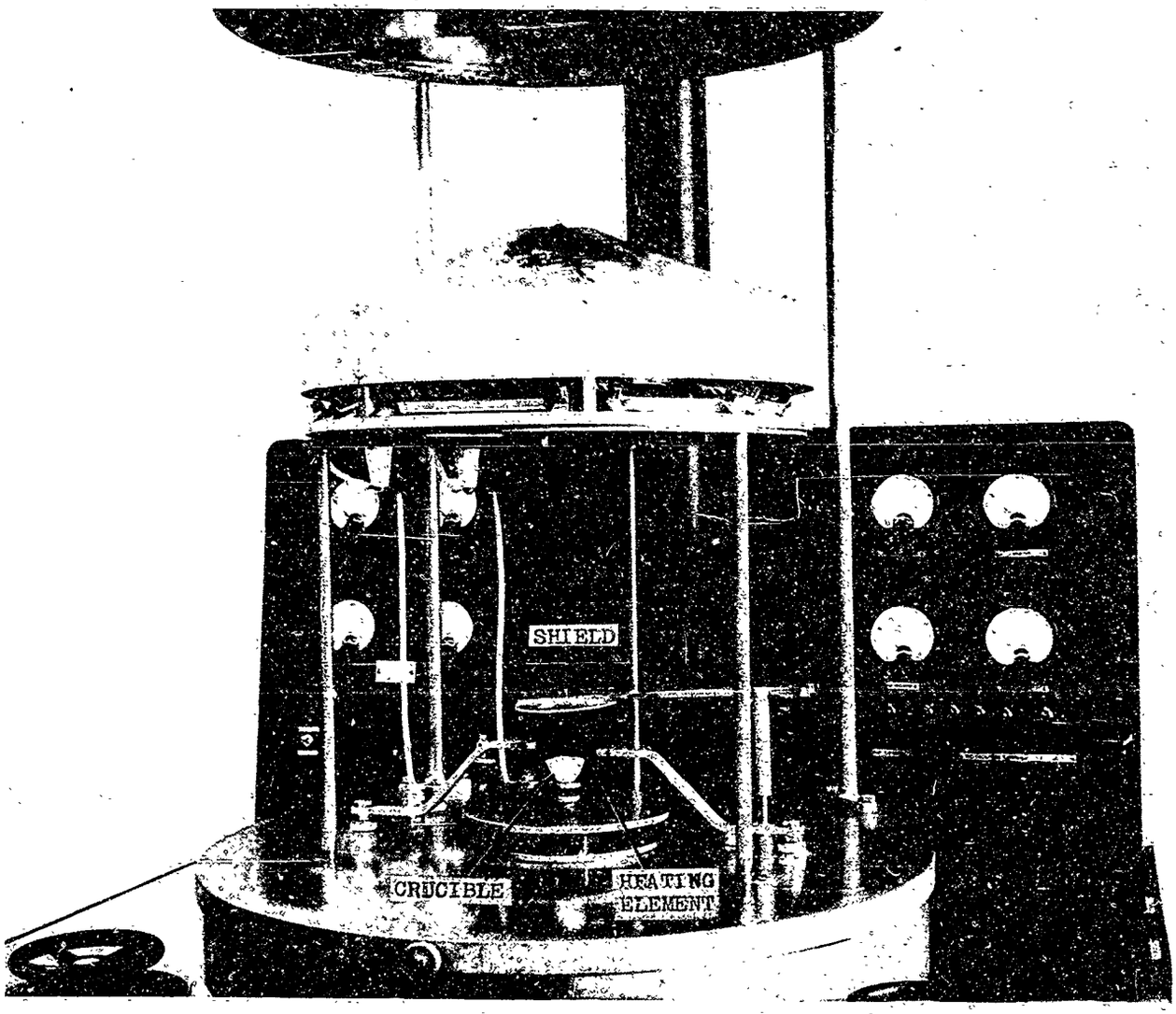

Aberdeen Proving Ground

Figure 1903.—Evaporative Coating Machine with Bell Jar and Shield Removed.
(Distillation Products, Incorporated)

magnetic clutch acting through the wall of the jar. The compensator revolves above the evaporating source and is so shaped that it cuts off a larger percentage of the radiation to the center of the rack, than to the edges, thus compensating for the shorter distance from the source to the center of the rack.

Controlling Film Thickness.—The thickness of a low-reflection coating must be controlled carefully. The easiest and simplest way to do this is to coat until light reflected from the surface being coated is a light purple. When a light purple reflection is observed, it indicates that the thickness of the coating is such that there will be a minimum of light reflected at the point of maximum sensitivity of the human eye. The most desirable light source to use for this test light is a 'daylight' fluorescent lamp, although an ordinary tungsten filament lamp equipped with a 'daylight' filter is used quite commonly, and any slightly-tinted white light may be used by an experienced operator without difficulty. The viewing light is made small so that it can be handled easily and a hole must be cut in the heater reflector to permit observation. Because the reflection colors of magne-

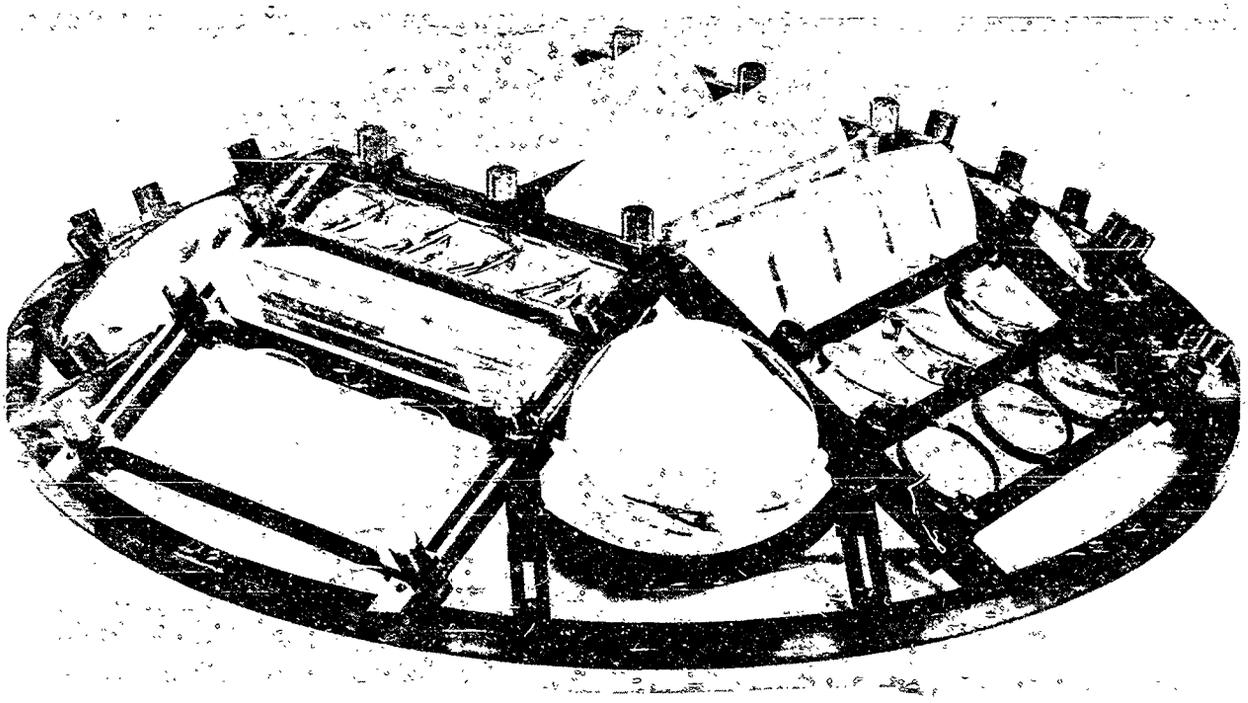

Figure 1904.—Adjustable Rack for Holding Optical Elements During the Coating Operation.

sium fluoride coatings are much harder to observe on crown glass than on the higher-index flints, it is often desirable to place one flint element at a convenient observation point in the rack, when a batch of crown glass is being coated. This practice facilitates control of film thickness, particularly when the observation must be made against the high illumination of the coating filament.

Some attempts have been made to control the thickness of the coat with photo-electric devices. While this can be done, the photo-electric system is somewhat complicated because provision must be made for stray light. At present, such a system seems to be necessary only in connection with the application of multi-layer films, or very thin films, where the reflection changes are so small that they are difficult to observe with the eye.

Another method of controlling the thickness is to weigh out a predetermined amount of coating material and evaporate all of it. When this system is used, factors which affect the amount of fluoride that reaches the glass surface may cause some of the fluoride to be misdirected and so upset control of the film thickness. These factors include losses due to spattering, poor vacuum, or non-uniform distribution of fluoride in its container, and any one of them may produce the trouble. However, this special method, when engineered carefully, has been used successfully.

Spattering.—Spattering which may occur during the coating process, and which will injure the elements, is defined as the projection of very small particles of fuzed magnesium fluoride onto the glass surface. There will be no damage done from this cause until the fluoride is heated sufficiently to melt or partially melt the spattered particles so that they fuze to the glass surface. The optical effect is similar to that of a pit and, in most cases, spattered surfaces must be re-ground and re-polished. Although all the causes of spattering are not known, it is believed that at least some are caused by strains in large fluoride crystals, and also by the presence of gases or other comparatively volatile substances, such as magnesium chloride, in the magnesium fluoride. This is the reason that it seems advisable to grind the fluoride fine enough to pass through an 80-mesh screen, and to bake it at 800 to 1000°C. in an electric furnace to remove any volatile substances. The fluoride should not come in

contact with the heating element, when the filament and crucible technique is employed. It is also advisable to place a shield between the filament and the elements while the fluoride is being preheated. When the fluoride is held in a molybdenum or platinum 'boat' which also acts as the heating element, the shield is even more important. Usually a shield (see Figure 1903) is composed of a thin piece of metal, and is moved from outside the bell jar by either a magnetic or a properly-sealed mechanical device.

Testing.—The efficiency of the film can be established by obtaining the reflection and transmission curve of a flat piece of glass, coated on both sides, in a spectrophotometer, such as those manufactured by General Electric Company or National Technical Research Laboratory Manufacturers. These curves give actual light reflection and transmission values for the filmed glass sample. Efficiency of the films is determined by three observations based on these spectrophotometric curves.

First, the reflection curves must not pass above three points located at 400, 550, and 700 millimicron units. The highest permissible reflection in per cent per surface at each of these three points is stipulated in the coating specification and varies for glasses of different refractive indexes.

Second, the minimum point on the reflection curve must fall between 450 and 600 millimicron units.

Third, the films must not absorb more than ½ per cent of the incident light per filmed surface. Films are tested for light lost by absorbtion and/or scattering by adding the reflection and transmission values at the wave length corresponding to the minimum point on the reflectance curve and subtracting from 100 per cent. Corrections must be made for glass absorbtion and instrument aberrations.

A film is tested for its adherence or durability by measuring its resistance to abrasion, to salt fog, and to water vapor. A customary test for resistance to salt fog is to place the element in a 'salt' atmosphere at 95°F. This atmosphere is obtained by bubbling air through a 3 per cent solution of sodium chloride into a completely enclosed vessel, or by atomizing the solution into the vessel, with the temperature maintained so that the optical element will be held at 95°F. The test for the effect of water vapor is done in a temperature- and humidity-controlled cabinet. The abrasion resistance may be measured by rubbing the coating back and forth a number of times with almost any good grade of pencil eraser that contains a fine pumice, and with a pressure of 2½ pounds on the surface of the element. If these procedures do not damage the film, its durability should be satisfactory.

Method Used by Minneapolis-Honeywell Regulator Company

This company has developed a unique method for supporting the elements, and for preparing the fluoride and holding it in the bell jar. Instead of placing the elements in a spherical or flat rack at the top of the bell jar, the racks are in the form of panels and are hung vertically around the periphery of the jar. See Figure 1905, which shows the jar raised and with all the panels in place, and Figure 1906 in which some of the front panels have been removed. The fixture which supports the racks, as well as the heating elements, is illustrated in Figure 1907. Instead of placing the magnesium fluoride in a crucible at the center of the bell jar, it is placed at intervals along the vertical axis of the jar and is held in small conical-shaped spring 'pellet holders', shown in Figure 1906, which are also used to heat the fluoride. In order that these holders can support fluoride satisfactorily, it is first prepared as described earlier in the chapter, and is then compressed into pellets in the press illustrated in Figure 1908. From three to five pellets distributed along the axis, are used to coat one machine-load of elements. The heating unit that is used to heat the optical elements is shown in Figure 1907, and it can be seen assembled in the machine in Figure 1906. It consists of a framework supporting vertically long helical coils of tungsten wire. These are placed at the joints between the element racks, but slightly nearer the center of the jar.

In this method, it has been found necessary to use different amounts of fluoride in each

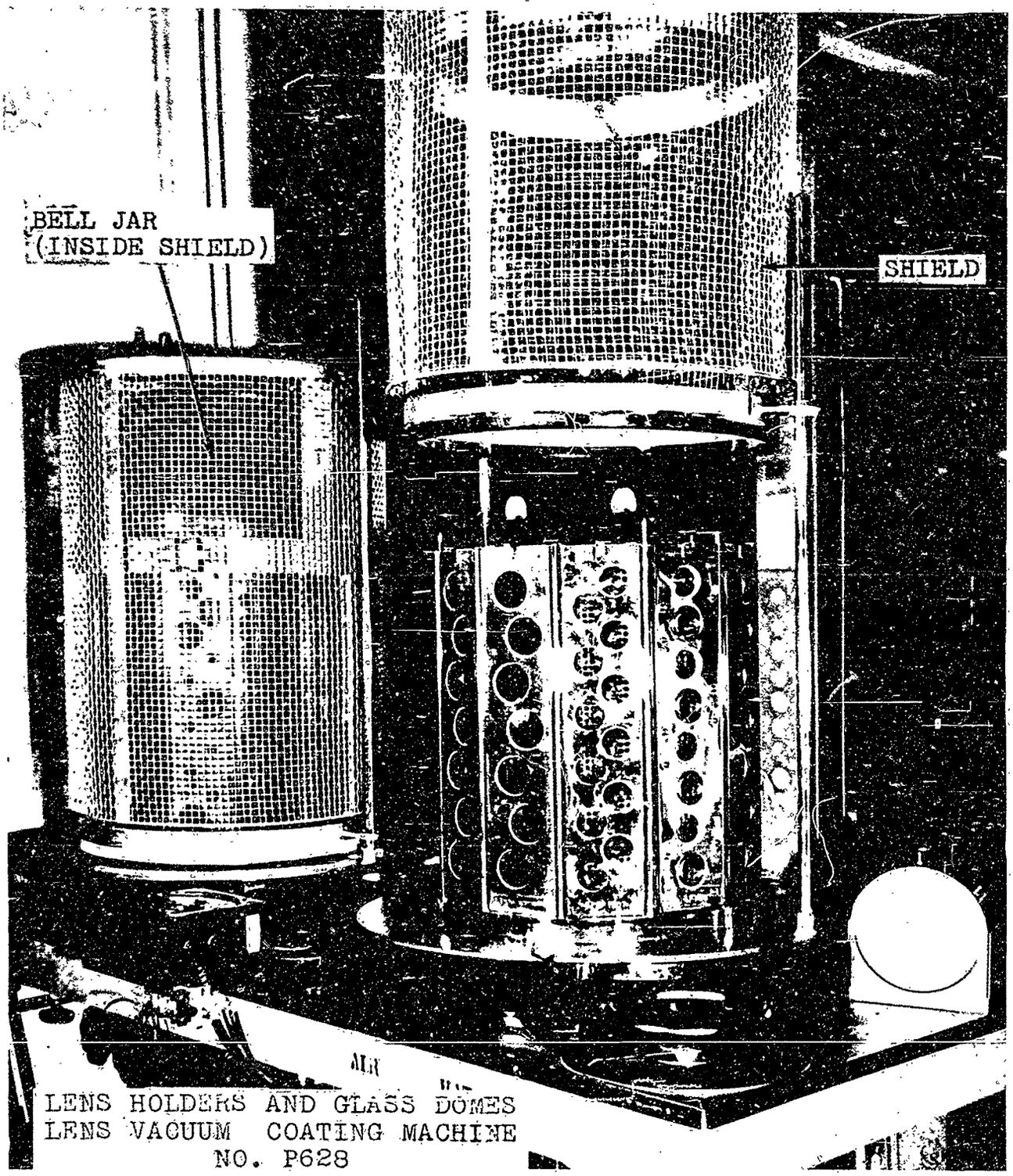

Minneapolis–Honeywell Regulator Company

Figure 1905.—Lens Holders and Bell Jars of Evaporative Coating Machine.
(Distillation Products, Incorporated)

pellet, in order to insure uniform distribution of fluoride over the surfaces of the optical elements from the bottom to the top of the racks and thus to obtain the same film thickness on every element regardless of where it is located in the racks. The amount of material to be placed in each must be exactly determined, and then accurately weighed out on a chemist's balance. After the pellets have been made, they are inserted in the tip of a 'pellet gun' (see Figure 1908) by using a 'pellet loader.' When the 'pellet gun' has been loaded the pellets are transferred to the pellet holders (Figure 1906) in the coating machine, by placing the tip of the gun at the holder and pressing the 'trigger.'

Because the pellet-holder support interferes with the distribution of the fluoride in that direction the support is rotated steadily at a slow rate by means of a small motor, thus neutralizing its interference and making pos-

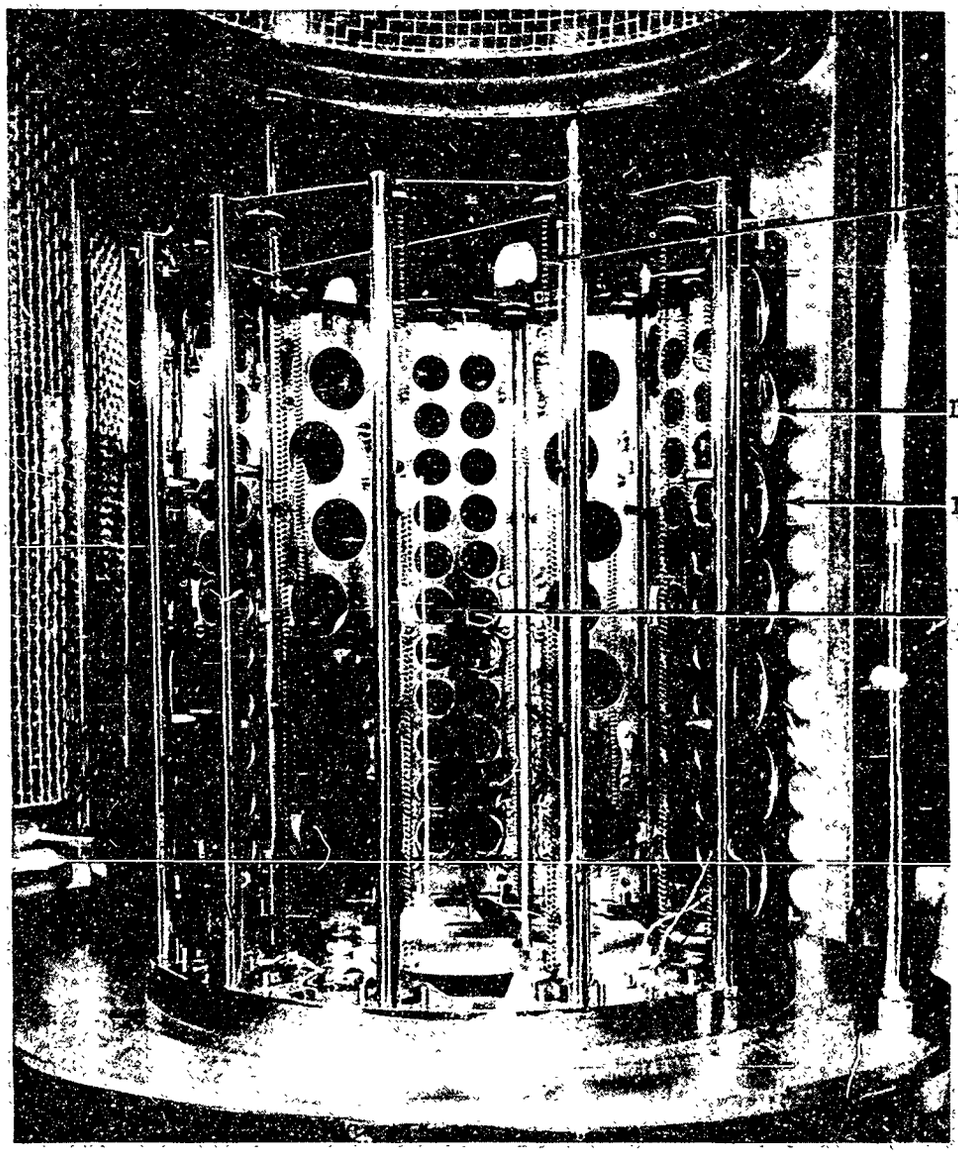

Minneapolis-Honeywell Regulator Company

Figure 1906.—Evaporative Coating Machine with Lens Holders Removed from Front.

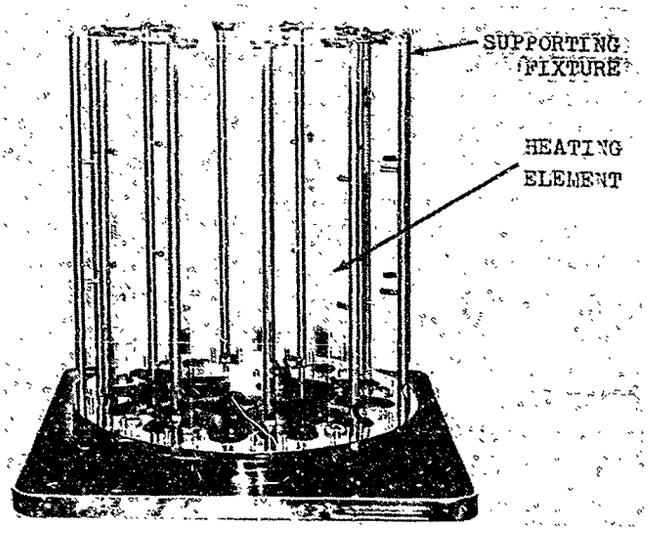

Minneapolis-Honeywell Regulator Company

Figure 1907.—Supporting Fixture and Heating Elements for Evaporative Coating Machine.

sible a uniform film thickness on all optical elements in the racks.

This method of coating has the advantage that more elements can be processed per cycle than when using the standard dome method. Its disadvantages are that it requires much more equipment and special tooling, as well as more careful control all through the process.

REFLECTING FILMS

Although a silver surface (deposited chemically as described in Chapter 18) has very high initial reflectance, the fact that it tarnishes easily when exposed to the sulphur compounds in the air impairs its usefulness for front-surface mirrors. This tarnishing can be reduced by protecting the surface of the silver with an evaporated coat of magnesium fluoride which is twice as thick as is used when making low-reflection films. The surface of a silver reflecting film will not tarnish when it is placed against the back of the glass (see Chapter 18).

However, the percentage of light reflected from a back-surface mirror is appreciably less than from a front-surface mirror, due to the light losses in the former case while the light passes twice through the glass.

Other metals such as aluminum do not have as high reflectance as silver, but their lower reflectance may cause less loss of light than the losses sustained when light passes twice through glass in being reflected from a back-surface silver film. Films of aluminum, which will not tarnish, are used for front-surface mirrors to a considerable extent; also films of other non-tarnishing metals—chromium, rhodium, and platinum, and various combinations of each are used. See Chapter 1, under "Front-surface Mirrors."

Finally, metal films may be protected with an evaporated coating of a transparent material, such as baked magnesium fluoride. When this is done, the permanency of the metal coating approximates that of the fluoride film itself.

Coating Process.—(See, also, under "Precautions when Coating More than One Surface," this chapter.) The method for applying evaporated reflecting films, which are usually metallic, is similar to that used for reflection-reducing coatings, except in the preparation of the metal coating material. The metal coating material is prepared in the form of small U-shaped pieces so that it can be hung on the electrical heating filament, which is usually made of tungsten or molybdenum. Current is then passed through the filament until the coating metal is heated to the melting point, when evaporation will take place in the same manner as when magnesium fluoride is used. The adherence of the aluminum (which is the material used most commonly) to the glass surface, can be improved by evaporating or sputtering a coat of chromium before applying the aluminum. One patented method for doing this, starts with chromium and adds aluminum while, at the same time, reducing the chromium gradually during the coating process, until, at the end of the process, only aluminum is being evaporated. Such aluminum reflectors as front-surface mirrors though very adherent, are soft, and scratch easily; their durability and resistance to abrasion can be greatly improved by application of baked magnesium fluoride on the metal film.

Reflecting surfaces can be made by evaporating silver on either the front or back surface of elements, although, in some respects, it is more difficult to use than aluminum. The principal modification in evaporating this metal

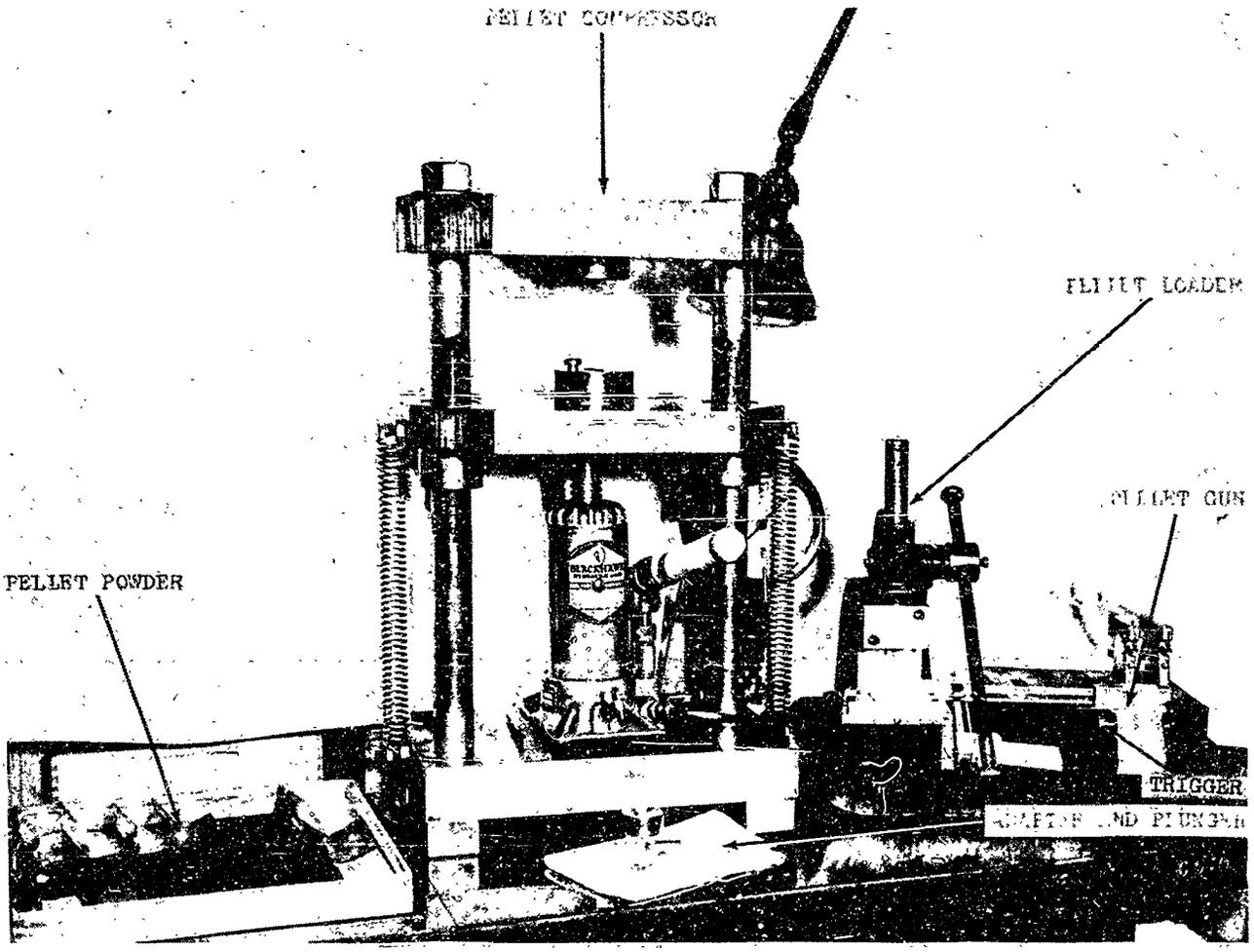

Minneapolis-Honeywell Regulator Company

Figure 1908.—Equipment for Forming Magnesium Fluoride Pellets.

is to use an alloy of silver with 3 to 5 per cent platinum to obtain 'wetting' of the evaporating filament.

A variation of this method is to use a molybdenum heating filament instead of a tungsten filament, because the silver 'wets' the molybdenum better, and therefore evaporates from it without falling off. Finally, any metal which is difficult to evaporate from a filament may be evaporated from a 'boat'. (As noted earlier, a boat is a molybdenum or platinum crucible which also acts as a heating element.)

Controlling Film Thickness.—A reflecting film should be as thin film as possible, because a thin film adheres to the surface of the element better. Nevertheless, it must be thick enough to be opaque, so that all the light will be reflected and none lost by passing through the coating. A simple method for controlling the thickness is to observe the glow of the heating element from the top of the bell jar through an element being coated. When it is no longer possible to see the heating element, it indicates that the film is opaque and the coating process should be stopped immediately.

Spattering.—When coating optical elements with reflecting films, spattering as described earlier, should be guarded against in the same manner as when low-reflection films are being applied.

Testing.—There are several tests for durability and hardness which may be used to

determine the quality of a mirror. The mirror should withstand various cleaning methods, such as washing with a solution of sulphated alcohol and ammonium hydroxide in water, or allowing a thick paste of precipitated chalk and water to dry on the surface and then wiping it off with a soft cloth, or allowing a drop of distilled water to dry on the surface at room temperature and then cleaning it with acetone or grain alcohol.

Mirrors should withstand the same humidity and salt fog atmosphere tests that are given low-reflection films and which are described earlier in this chapter. The abrasion-resisting qualities of a reflecting metal film can be tested by rubbing the surface fifty times with a dry pad of cheesecloth, using a pressure of 1 pound. If the film is covered with baked magnesium fluoride, the eraser test described earlier in this chapter may be used.

A metallic coating is tested for adhe once by using a transparent cellulose tape test. This consists of applying a strip of commercial-grade transparent cellulose tape to the surface of the film until the best possible contact is obtained. The tape is then pulled off the surface slowly, and if none of the coating is removed from the glass, the coating is described as very adherent; if minute portions of it are removed, it is classified as semi-adherent; and if all or most of it is removed, the coating is non-adherent and unsatisfactory.

PRECAUTIONS WHEN COATING MORE THAN ONE SURFACE

Certain precautions must be taken when more than one surface of an optical element is to be coated, so that, when coating a surface, one that has been processed previously will not be impaired. This difficulty will arise, whether the side first coated has been treated chemically (as described in Chapter 18), or with the evaporative method (as described in this chapter), and whether the coatings are of the reflecting or non-reflecting types, or combinations of both. Some methods for overcoming these difficulties are discussed in the following paragraphs.

Coating Faces Successively.—When two surfaces on the same element are each to be coated with high-temperature baked magnesium fluoride, the difficulty arises that, while coating the first surface, some of the molecules pass through spaces in the rack and are deflected and adhere to the second or back surface. This operates to reduce the 'cleanliness' of the second surface, thus producing on it a thin and poorly adherent film. This may cause poor adhesion of the coating to the second surface when it is finally applied. The simplest method for reducing this trouble is to place the elements in racks that fit them closely, and which are arranged so that the radiating molecules cannot pass the rack to be deflected onto the second surface. The tendency to coat other surfaces than those desired, is also reduced by using a high vacuum for the evaporating process, *e.g.*, a vacuum of 0.01 micron (0.00001 mm) of mercury.

Coating Faces Simultaneously.—When two faces of a prism that are adjacent and make an angle with each other are to be coated with high-temperature baked fluoride, the work can be done simultaneously, if the racks are designed to hold the elements with the angle formed by the two surfaces to be coated towards the radiating fluoride. When it is so arranged, both surfaces will be coated at the same time. However, the resulting coating may not be sufficiently durable in some cases. In these cases, the process should be abandoned and the surfaces coated singly.

Coating Other Faces with Chemically-deposited Silver.—The only precaution needed in this case is to make the baked fluoride coatings hard and durable. When this is done, it is seldom that they are injured by a silver coating that is applied subsequently by chemical methods (see Chapter 18). Because it is very difficult to prevent the entrapment of moisture in a silver coating that is applied chemically, it is seldom that such a surface can be subjected to the high heat and low pressure of the evaporating process without rupturing it. Therefore, it is generally advisable to coat any surfaces of an element that are to receive an evaporated film, before applying a silver coating on any other surfaces by a chemical process.

Coating Other Faces with Evaporated Metal.—The precautions that should be used

in these cases are the same as were described for applying high-temperature baked fluoride coatings on more than one surface.

DECOATING

A soft magnesium fluoride coating can be removed from the surface of an element by soaking in solvent materials, such as saturated sodium chloride in water, from 24 to 36 hours. Hard baked magnesium fluoride requires more stringent methods. A system developed and used successfully at Frankford Arsenal for removing hard high-temperature baked magnesium fluoride is to soak the elements in a warm (120° F.) saturated solution of potassium hydroxide for 5 minutes, then rinse them in lukewarm water, and then immerse them for not more than 30 seconds in concentrated nitric acid. After this, the elements are again rinsed in water and dried. This procedure is repeated until the coating has been removed. However, it is seldom necessary to use more than four cycles. The potassium hydroxide solution is made by dissolving three parts by weight of potassium hydroxide pellets in two parts of water, stirring constantly and very slowly, because the solution will become quite hot as the potassium hydroxide dissolves. The nitric acid used is the technical grade. It is used at a room temperature.

To avoid staining, it is best to leave the elements completely immersed in the water bath, and to remove and dry one element at a time. Care must be taken that the rinse water is warm enough so that it will not chill the elements coming from the warm potassium hydroxide solution enough to cause breakage, and that it is changed constantly so that it cannot build up a concentration of either hydroxide or acid.

Another method of decoating baked magnesium fluoride films is to immerse the elements completely in a solution of 5 grams of boric acid crystals in 150 cc of concentrated sulphuric acid at room temperature, heat the system to between 230 and 250°F. for a few minutes, and then allow it to cool slowly. The elements are then removed, washed thoroughly, and dried. While many tests have shown that these decoating methods do not affect the surfaces of the elements, it is advisable to decoat a few elements and examine them carefully, before processing a large number.

Potassium hydroxide, and sulphuric and nitric acids are highly corrosive and react quickly on the skin, clothes, etc. Operators should wear rubber gloves, rubber aprons, and goggles. A safety shower or other means should be provided for quick washing in case of an accident, and the decoating operation should be carried out under a ventilated hood which will draw off any corrosive vapors. It is better not to use glass containers, due to the possibility of breakage and consequent splashing about of the corrosive solutions. Enamel ware is satisfactory and, although it will eventually corrode, it is inexpensive to replace. Stainless steel containers may be used also, and, for the potassium hydroxide bath, almost any metal except aluminum may be used.

An aluminum reflecting film may be removed by rubbing it with, or soaking it in, a concentrated solution of potassium hydroxide. If the aluminum has been given a baked magnesium fluoride over-coating, this method is slow, and it may be advisable to assist the process by rubbing with a mild abrasive, such as rouge, 'Celite', or the like. Silver films are removed with nitric acid, while some other metals, such as sputtered chromium, must be polished off—as they cannot be removed chemically without ruining the underlying glass surface.

CHAPTER 20

CEMENTING LENSES

	Page No.
Preparing the Lenses.	2003
Procedure with Thermoplastic Cements.	2003
Preparing the Cement.	2003
Liquid Form.	2004
Stick Form.	2004
Applying the Cement.	2006
Uniting the Lenses.	2007
Establishing Concentricity.	2007
With Clamps.	2007
With Plunger Fixtures.	2007
With a Collimator Aligning Instrument.	2012
Cleaning and Reworking Cemented Lenses.	2013
Decementing.	2014
Correcting Cemented Lenses.	2014
Procedure with Pure Butyl Methacrylate and Thermosetting Cements.	2014
Preparing the Cement.	2015
Applying the Cement.	2015
Uniting the Lenses.	2015
Establishing Concentricity and Cementing.	2015
With Clamps.	2016
Without Clamps.	2016
Decementing.	2016
Methods of Delaminating.	2017
Lenses Cemented with Pure Butyl Methacrylate.	2017
(a) Hot Castor Oil.	2017
(b) Pure Butyl Methacrylate Solvents.	2018
Lenses Cemented with Thermosetting Cements.	2018
(c) High Boiling-point Liquid.	2018
(d) Alcohol or Acetone.	2018
(e) Dry Heat.	2018
(f) Boiling Water.	2018
(g) Acetone and Dry Ice.	2018

	Page No.
Removing the Cement from the Elements.	2018
Pure Butyl Methacrylate.	2018
Thermosetting Cement.	2018
Centering and Edging Cemented Lenses.	2018
Optical Research, Incorporated.	2018
Edge Coating.	2019
Edge Sealing.	2019
Edge Painting.	2020

Many lenses in optical instruments consist of two or more simple lenses that are cemented together to form a single achromatic unit. (See Figure 119.) Until recently, lens were united with 'Canada balsam', which is a thermoplastic cement and comparatively simple to use. However, the new cements that have been introduced in the last few years, in order better to withstand extremes of temperature, require procedures that are somewhat more complicated and tedious. (See Figure 2001.)

PREPARING THE LENSES

Cleanliness of lenses and equipment is essential. Each crown and flint lens is washed in alcohol, wiped perfectly dry, and any fine particles of lint or dust are removed gently with a camel's-hair brush.

PROCEDURE WITH THERMOPLASTIC CEMENTS

Preparing the Cement

Thermoplastic cements, of which the principal example is Canada Balsam (He-225, made by Eastman Kodak Company, is another), can be used in either liquid form or in stick form. In either case, it is advisable to examine the cement under magnification to make certain that it is clear and free from foreign matter. Canada balsam consists of a mixture of volatile constituents, called 'spirits of turpentine',

TABLE OF OPTICAL CEMENTS

TYPE	METHOD OF APPLICATION	CHARACTERISTICS	MANUFACTURER'S DESIGNATION		MANUFACTURER
			BASIC COMPONENT	CEMENT	
Thermoplastic	Melted to apply Hardened by cooling	Thermoplastic resinous material obtained from a species of fir tree	Canada Balsam	Canada Balsam	(obtainable from most large optical manufacturers)
		Mixture of synthetic, thermoplastic resinous materials	(mixture)	HE-225	Eastman Kodak Company
Pure Butyl Methacrylate (Polymer has linear structure)	Applied as monomer or partial polymer always in form of liquid Hardened by baking in suitable oven	One double-bond per monomeric molecule	'Butyl Methacrylate'	--	Rohm & Haas
				HE-2	Eastman Kodak Company
				(other manufacturers make this type of cement for their own exclusive use.)	
Thermosetting (Polymer has three dimensional structure)	Applied as monomer or partial polymer in form of liquid or soft gel Hardened by baking in suitable oven or, in the case of UV-101, by exposure to ultra-violet light	Two or more double-bonds per monomeric molecule	CR-39	--	Columbia Chemical Company
				PKR-15	Bausch & Lomb Optical Company
		Cross-linking mixtures	Laminac #4122	--	American Cyanamid & Chemical Company
				UV-101	Argus, Inc.
				Field Cement	Frankford Arsenal
					Argus, Inc
			(mixture)	HE-5	Eastman Kodak Company

Figure 2001.

and comparatively non-volatile resins. In the cementing process, the volatile constituents evaporate, leaving the resins to act as the cementing medium between the optical elements. The greater the proportion of non-volatile resins that remain, the harder will be the finished cement. (See Chapter 25 for a more complete description of thermoplastic cements.)

Liquid Form.—This is the form in which Canada balsam comes from the manufacturer, and the principal precaution to be observed in its use is to keep it clean. A convenient way to use it is to keep it in a wide-mouthed bottle fitted with a conical paper cap. A glass rod is a convenient tool to use for applying it to the lenses. After liquid cement has been applied to a lens, it must be heated in the flint element until enough of the volatile constituents have evaporated to produce a cement that will be of the desired degree of hardness.

Stick Form.—To prepare the Canada balsam in stick form, the liquid is heated until the proper amount of the volatile constituents have evaporated, and then it is cast or poured into glass tubes. After it has cooled, it is removed from the tube and attached to the inside cover of a glass jar (see Figure 2002), in which it is kept dust proof and clean when not in use, as shown in Figure 2003. The advantage of using the balsam in stick form is that cements of

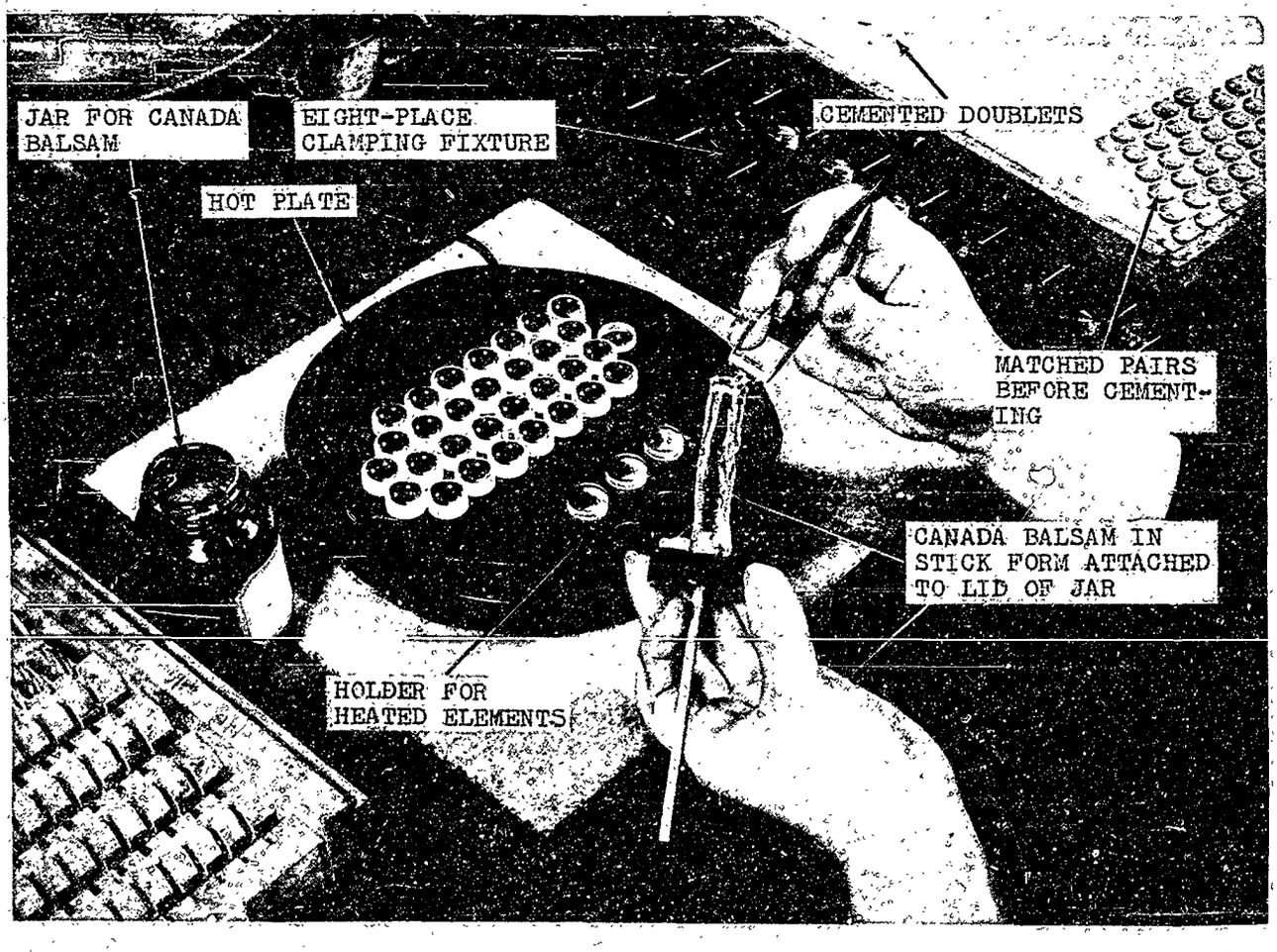

Eastman Kodak Company

Figure 2002.—Applying Stick Balsam to a Lens.

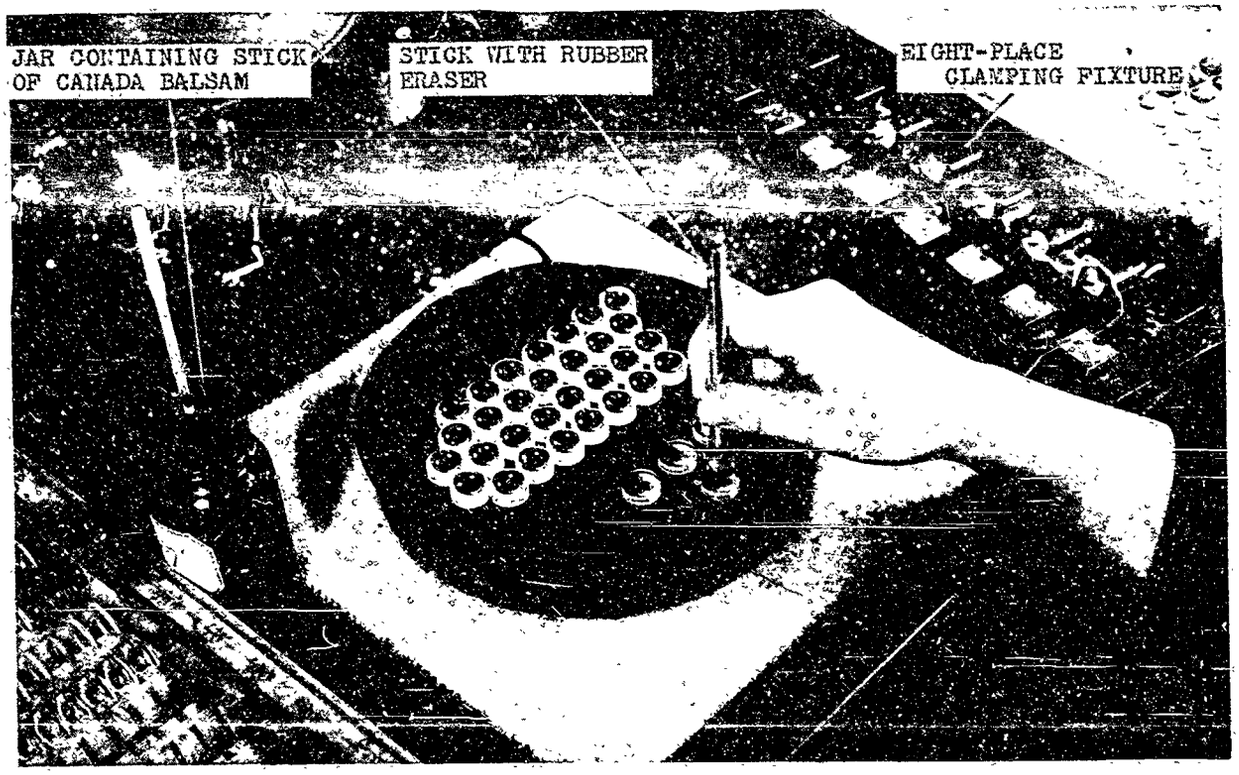

Eastman Kodak Company

Figure 2003.—Working Out Air Bubbles After Applying Balsam.

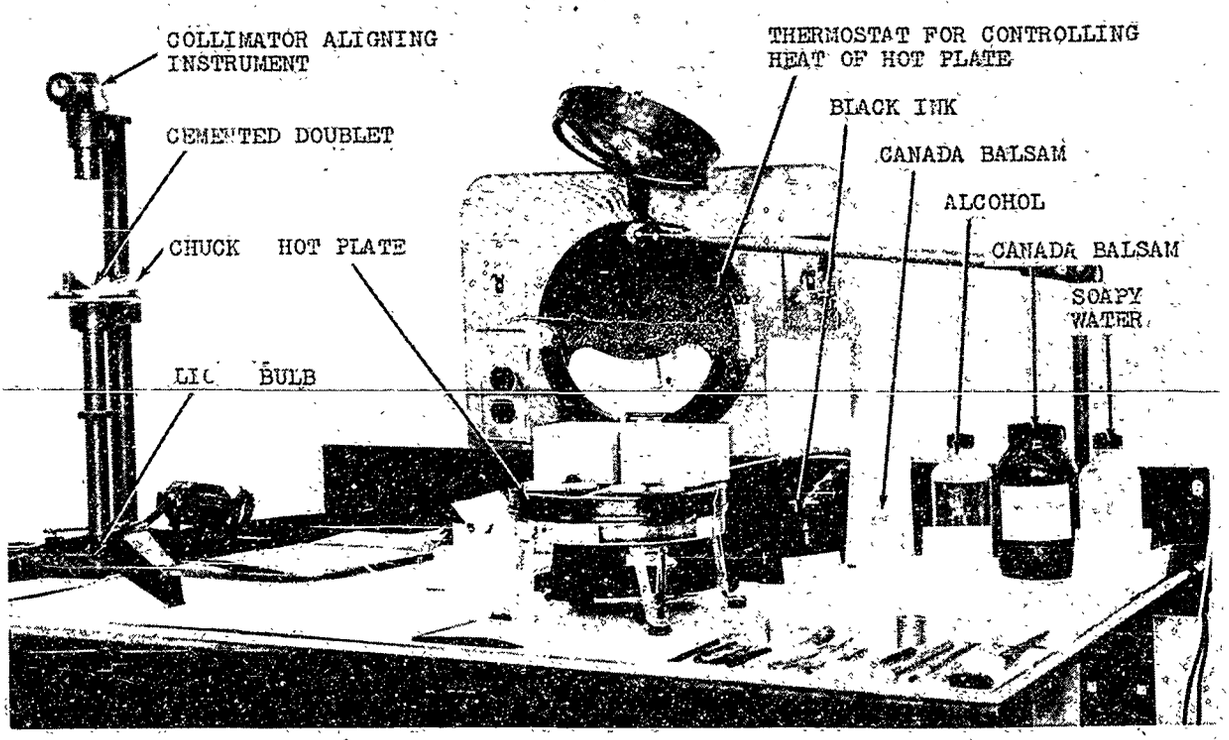

Figure 2004.—Equipment Arrangement for Cementing and Checking Alignment of Lenses.

varying degrees of hardness may be supplied, and the cementing operator is not required to exercise any judgment in deciding when the cement has 'cooked' enough in the flint lens. This is because the only preheating that Canada balsam in stick form requires is just enough to melt it so that it can be transferred to the lens. (See Chapter 25 for a more detailed description of preparation.)

Applying the Cement

A typical cementing bench arranged for using liquid thermoplastic cement, as used at Frankford Arsenal, is shown in Figures 2004 and 2005. And a work bench designed for the using of Canada balsam in stick form, as used by Eastman Kodak Company, is shown in Figures 2002 and 2003.

When liquid thermoplastic cement is used, a 3 x 3 inch square of heavy black paper is placed on a hot plate in order to facilitate the detection of air bubbles and to prevent the lenses from being scratched on the hot plate. A clean flint lens with the concave side up is placed on the black paper and covered with a suitable dust-proof cover, such as a small perforated cardboard box lid. The flint is usually concave and so serves to hold the cement and, in addition, its edge is generally wider than the crown and, therefore, is held more easily in a clamping fixture. The box cover is lifted and a small quantity of balsam is applied to the concave surface of the flint lens. The lens cover is replaced, and the balsam is heated, allowing the turpentine fumes to escape through the perforations in the cover. Whenever the balsam jar is not in use, it is covered to protect it against lint and dust.

When Canada balsam is used in stick form, it is not necessary to heat the balsam after it

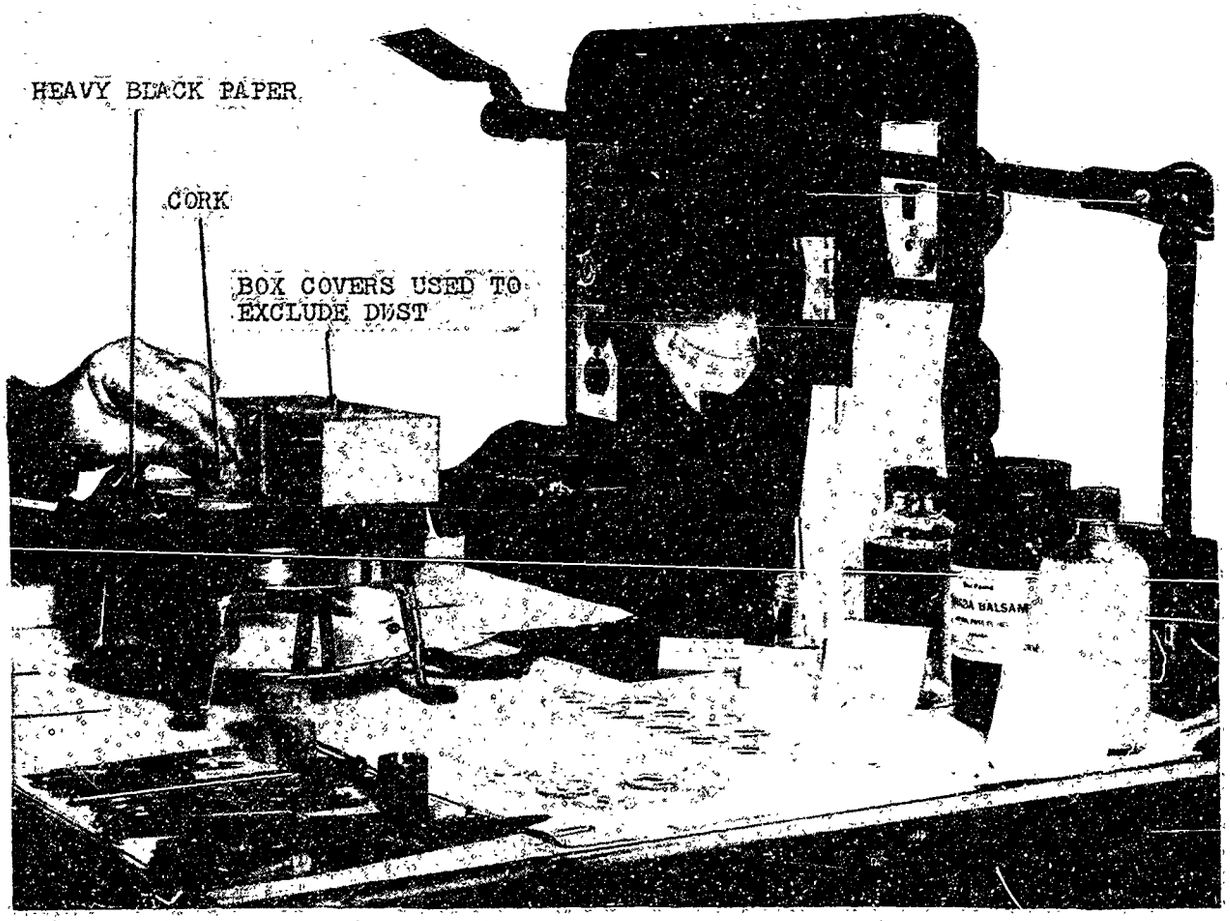

Figure 2005.—Working Out Air Bubbles by Moving Crown Element on Flint Element.

has been applied to the flint, as the turpentine is removed from it when it is molded into the stick.

Uniting the Lenses

The liquid Canada balsam in the flint lens becomes harder as it is heated on the hot plate. The hardness is checked frequently by inserting the point of a steel scriber into the hot balsam, withdrawing a drop of the material and allowing it to cool. The balsam will be hard enough to use as soon as a drop snaps crisply when crushed on a fingernail. Overheated or overcooked balsam loses its clear amber hue, becomes brownish yellow, and should not be used. Since in stick form Canada balsam requires no heating, it is not necessary to make this test, and the elements may be united immediately.

The crown lens is picked up with the forceps, slid onto the flint with a rolling motion, allowed to set for about 30 seconds, and then any excess balsam is squeezed out. If air bubbles are present, the crown lens is pressed with a cork on the side that is furthest away from the bubbles, as shown in Figure 2005, and worked with a rotating motion until the bubbles are forced out. Then the crown is moved until it is concentric with, and does not overhang, the edge of the flint. Finally, a few more rotating strokes should be made with the cork in the center of the crown to prevent the cement from forming a wedge-shaped layer between the elements.

Establishing Concentricity. — While the doublet is still hot, it is taken from the hot plate and checked for concentricity, since it is essential that the optical axes of the two elements coincide. There are three general methods for aligning the elements and they may be applied singly or in combination, depending upon the type of work and the accuracy desired.

With Clamps. — The pair of elements is placed in a clamp which has either two, three, or four accurately-machined surfaces or contact points which grip the lenses and force them into physical alignment. If the individual lenses have been centered and edged accurately, as described in Chapter 13, the optical axes will coincide, and the doublet will be centered optically. The three-point clamps have two fixed contacts, and a third movable contact controlled by a spring, screw, or eccentric post. A two-point contact clamp holds the lenses at an angle from the horizontal so that gravity takes the place of the pressure clamp. The use of two V-blocks to line up a doublet is self-explanatory. All clamps should have carefully made knife-edges or round posts as contact edges, and all contact edges must be lined up perpendicular to the supporting base.

A clamp that uses three points of contact, two fixed and one movable, and used by Anchor Optical Company, is illustrated in Figure 2006. The three points are spaced approximately equidistantly and the movable one is controlled by a spring. Hence, in using the clamp, it is necessary only to push back the movable point, lay the warm doublet on the fixture against the two fixed points and, releasing the third point, allow it to press against the doublet. This pressure will tend to align the two elements as desired.

An eight-piece clamping fixture with four points of contact, used by Eastman Kodak Company, is illustrated in Figures 2002 and 2003. The clamp illustrated is used with thermoplastic cements, and for continuous production. By the time that the operator has filled the eighth position, the doublet in the first position has set sufficiently so that it may be removed with safety. The clamp illustrated is provided with a recess to receive the doublet. This separates the lower surface of the flint from the base of the fixture and thus prevents it from scratching the element.

All the clamps used for aligning elements during baking must be designed and used so that the minimum amount of pressure will be placed on the element during the baking period. It is also advisable to replace metal with heat-insulating materials where the clamp touches the element.

With Plunger Fixtures. — This method brings the optical axis of the crown and flint elements into coincidence by providing ring pressure, through mechanical means, on the two outside faces. This aligns the lenses with the axis of the plunger fixture. The centers of

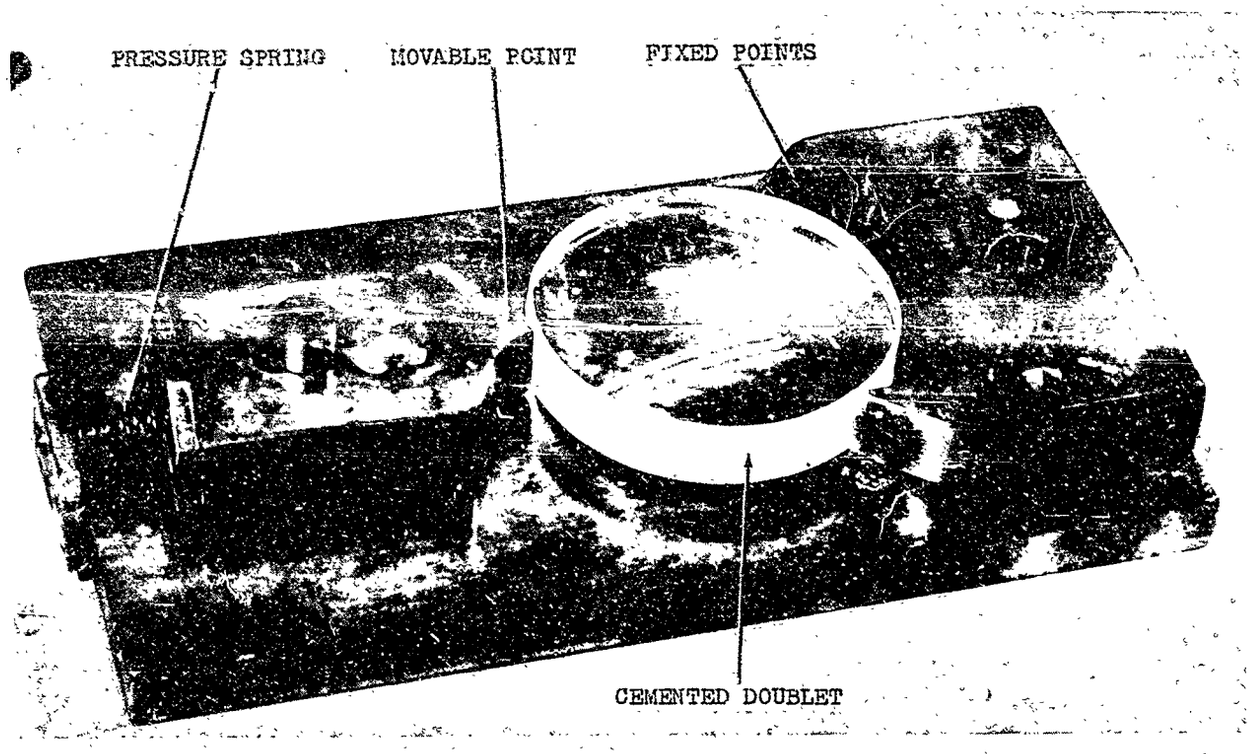

Anchor Optical Corporation

Figure 2006.—Fixture for Clamping Crown and Flint Elements While Cement Sets. (Official U.S. Navy Photograph)

the two parts of the plunger must be aligned accurately so that they are coaxial.

A fixture of this type, as used by Bausch & Lomb Optical Company, is illustrated in Figures 2007 and 2008. In this fixture, the lower element, usually the flint, is held by a split-ring chuck which can be rotated on a vertical axis. Supported above and aligned with it, is a hollow wooden plunger made of lignum vitae or hard rubber (some operators use steel), which has a concave surface on the lower end, and a somewhat shorter radius than the upper or crown element. This permits only the outer edge or 'ring' of the plunger to touch the glass. The doublet and collet are heated and bubbles are worked out of the cement. Then the doublet is placed in the chuck so that the flint element is held by the chuck when the collet is tightened. Next, the plunger is pressed down gently onto the crown lens surface. Then the plunger is raised, the chuck is turned a little, and the plunger is pressed against it again. This process is repeated several times until the crown is seated firmly on the flint element, after which the plunger is latched down and the lens is allowed to cool until the cement has set.

Another type of plunger fixture, also used by Bausch & Lomb Optical Company, is illustrated in Figures 2009 and 2010, and utilizes the principle of reflected images for aligning the elements, as described in Chapter 13, *Centering and Edging Lenses*. The split-ring chuck, which holds the flint element of the doublet, is mounted on a rotating spindle. The plunger is mounted in a sliding tube, and is aligned accurately so that the axes of both the chuck and the plunger coincide.

When using this fixture, the collet and a cemented lens doublet are heated separately on an electric hot plate, and the air bubbles are worked out from between the cemented elements. The doublet is then mounted in the split-ring chuck so that the flint element is held by the chuck when the collet is tightened. The chuck is rotated and the reflection of an illuminated image on the surface is observed. The plunger is pressed against the rotating

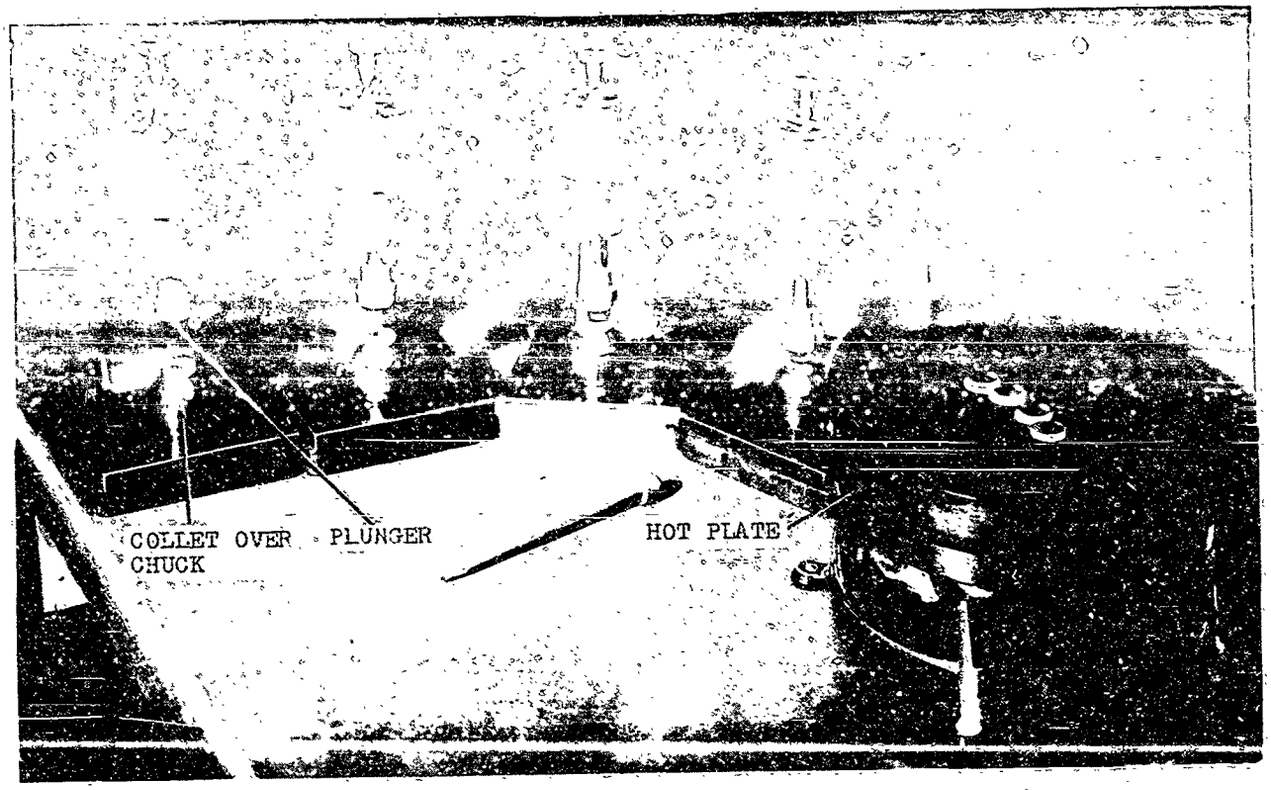

Bausch & Lomb Optical Company

Figure 2007.—Machine for Aligning Cemented Lenses with a Plunger and Manual Rotation.

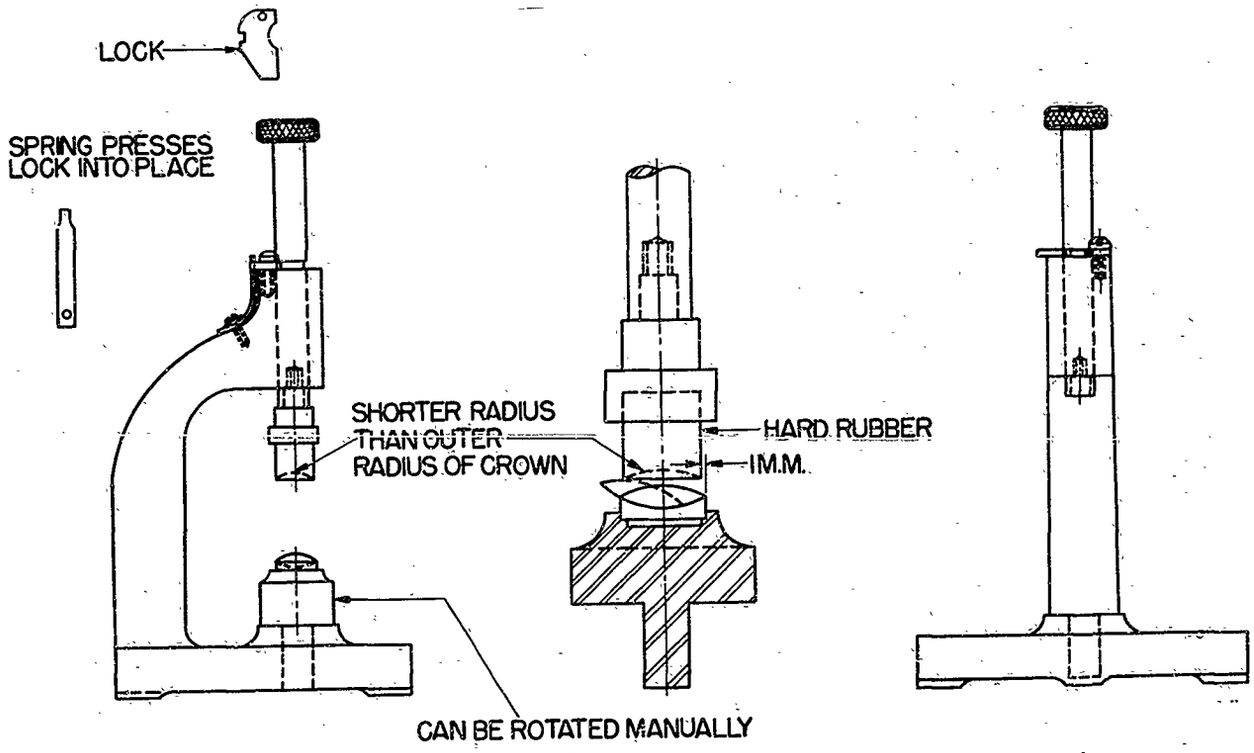

Figure 2008.—Views of Machine for Aligning Cemented Lenses with a Plunger and Manual Rotation.

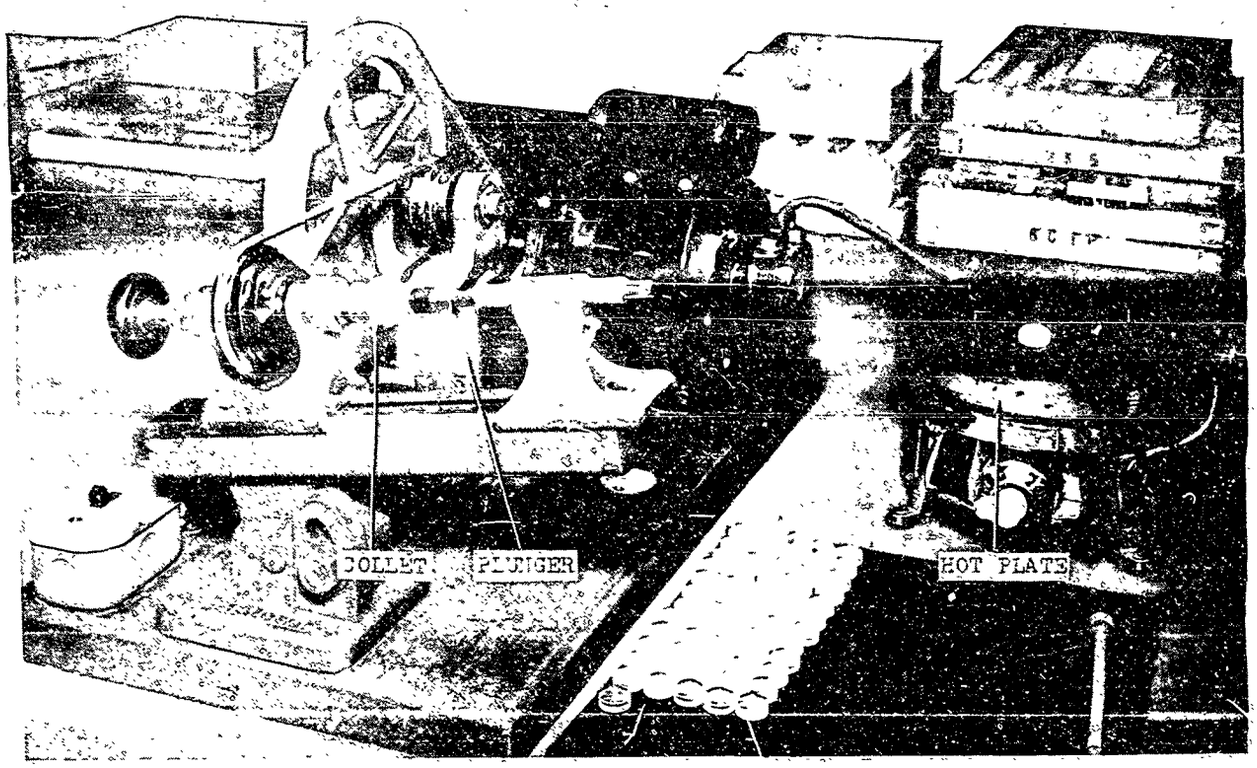

Bausch & Lomb Optical Company

Figure 2009.—Machine for Aligning Cemented Lenses with a Plunger and Mechanical Rotation.

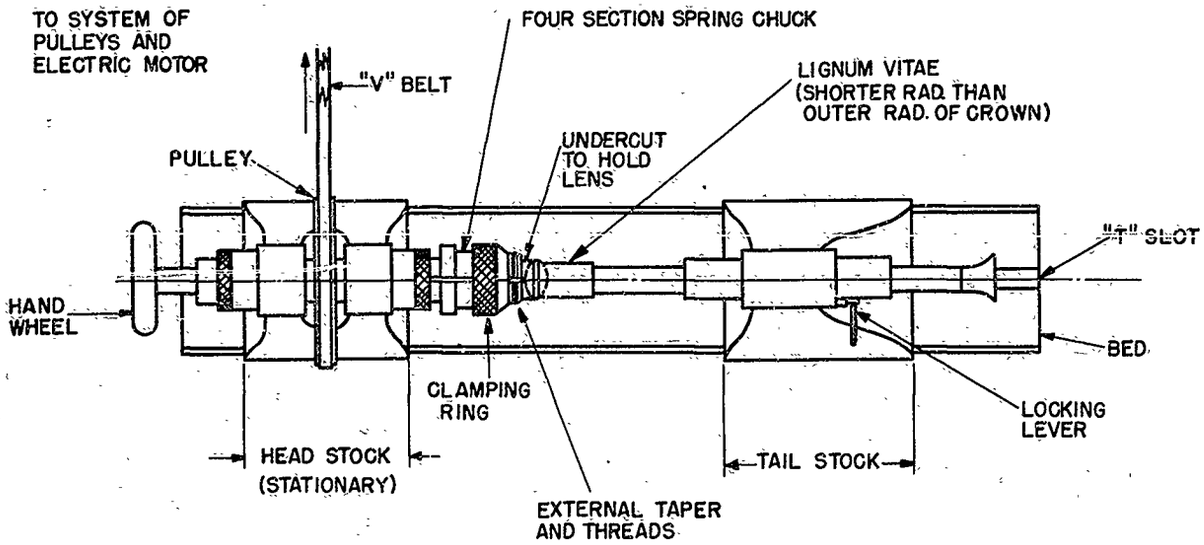

Figure 2010.—Plan View of Machine for Aligning Cemented Lenses with a Plunger and Mechanical Rotation.

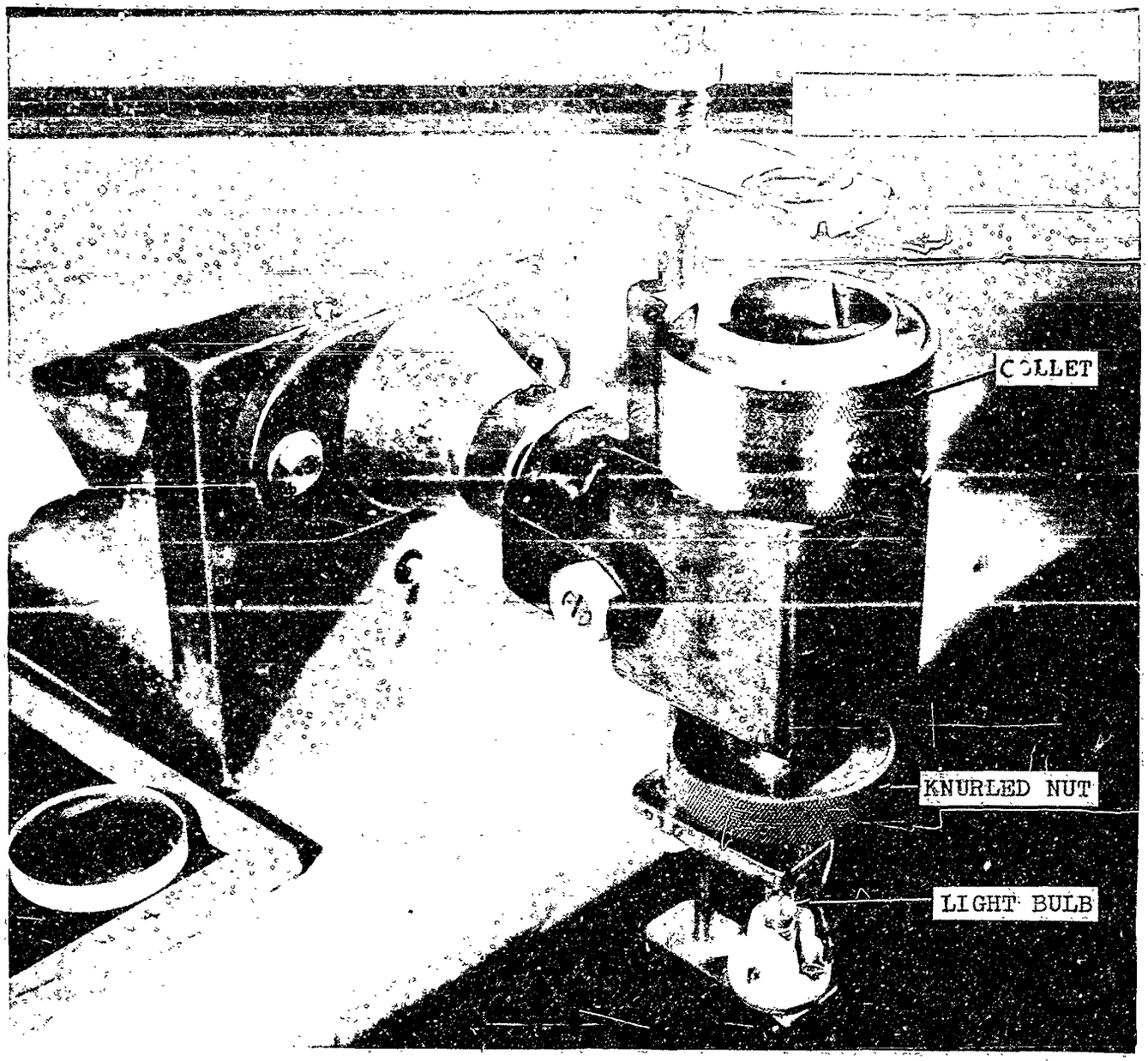

Anchor Optical Corporation

Figure 2011.—Collimator Aligning Instrument for Aligning and Checking Optical Axes of Cemented Lenses.

lens surface and then withdrawn. Again the image is observed. These operations are repeated until the reflections from all surfaces remain stationary as the lens is rotated.

If the lens to be aligned consists of three or more cemented elements, the procedure is altered slightly. The lenses and collet are heated and the bubbles worked out as above, then the lenses are mounted in the chuck so that only one lens is held when the collet is tightened. Next, the central element is trued with the lens held in the chuck by pressing a pointed stick against its edge, while observing the reflected image. (A double-pointed stick may be used

to true two central elements simultaneously.) Then the outside element is trued by use of the plunger, as described above.

With a Collimator Aligning Instrument.—A collimator aligning instrument, used by Frankford Arsenal, is shown in Figure 2004. The cemented doublet is taken from the hot plate and centered in this instrument, as described in Chapter 24.

Another collimator aligning instrument, used by Anchor Optical Company, is illustrated in Figures 2011 and 2012. It contains a collet, arranged to rotate about a vertical axis on ball bearings, and has a hollow spindle bored to fit the diameter of the doublet to be checked. A small light source is placed at the lower end of the chuck spindle and a small ground glass screen is mounted above the collet and arranged so that it can be swung out of the way when changing lenses. To use the fixture, a warm doublet is placed so that the flint element is in the collet, which is then tightened by the large knurled nut. Now, when the ground glass screen is swung into place, a small spot of light will be seen on the surface of the screen. Misalignment of the elements will cause this light spot to move in a circle as the collet is rotated on its ball bearings, with the radius of the circular path decreasing as the eccentricity of the doublet decreases. The doublet is aligned by moving the crown element on the flint until the spot of light remains stationary when the doublet is rotated.

A third example of a collimator aligning instrument, used by Eastman Kodak Company, is illustrated in Figure 2013. It is quite similar to that just described, except that instead of using a beam of transmitted light moving on a screen above the rotating doublet, the operator checks the concentricity by observing the movement of the reflected images of a light source placed overhead. In this instrument, the chuck is motor driven, and the method that is used for aligning is the same as that described in Chapter 13, *Centering and Edging Lenses*. In the example illustrated in Figure

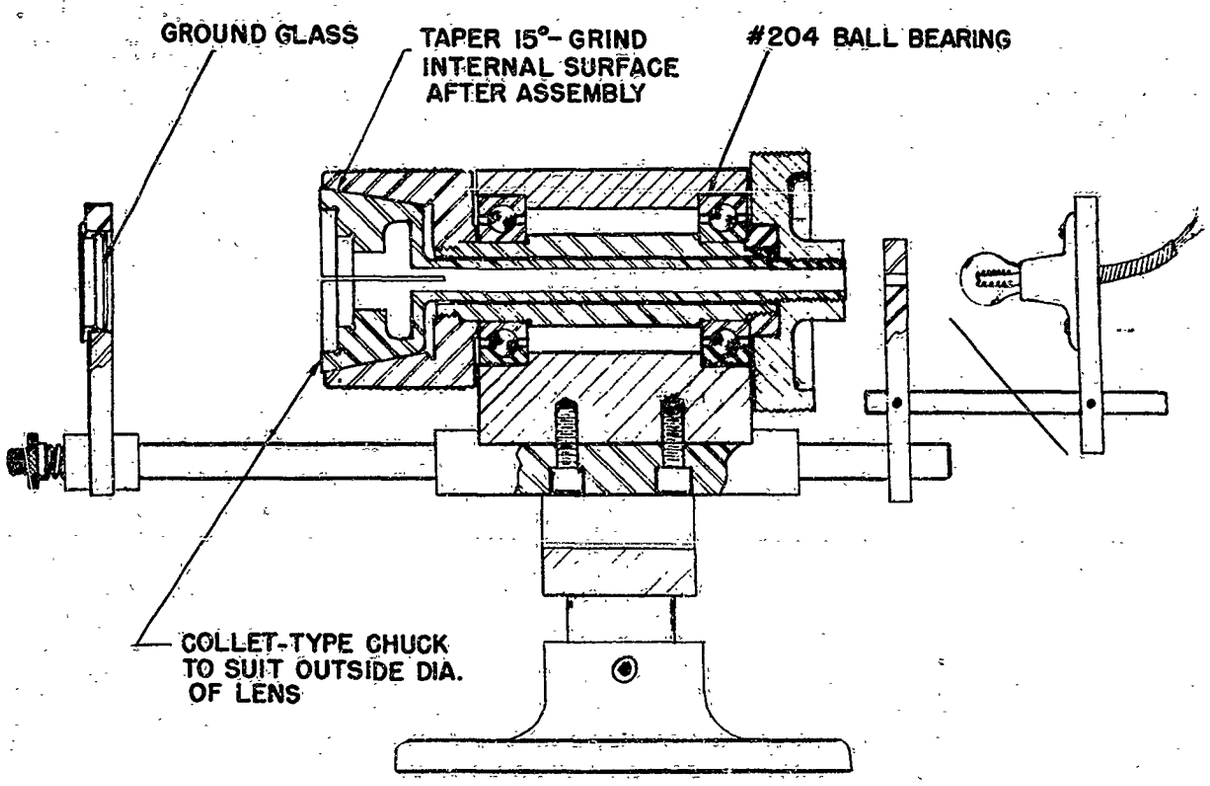

Anchor Optical Corporation

Figure 2012.—Cross-section View of Collimator Aligning Instrument for Aligning and Checking Optical Axes of Cemented Lenses.

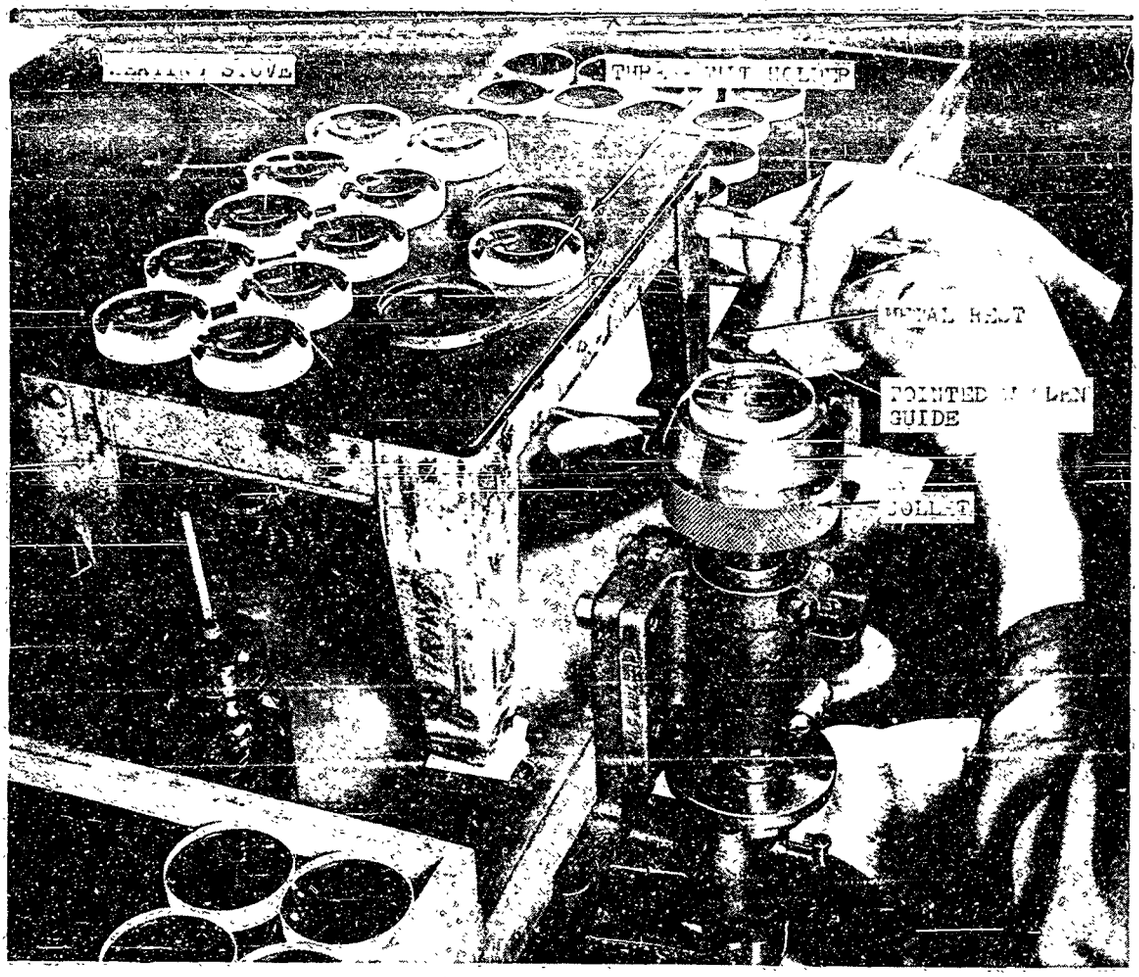

Eastman Kodak Company

Figure 2013.—Collimator Aligning Instrument for Aligning and Checking Optical Axes of Cemented Lenses.

2013, the operator is aligning a doublet with a pointed wooden guide held on a small metal rest.

Cleaning and Reworking Cemented Lenses

When the lenses have cooled sufficiently to prevent shifting, they are taken out of the centering device and placed on clean paper. When entirely cold, any excess cement is removed by stroking with an alcohol-soaked, camel's-hair brush. Too much alcohol must not be applied or it may seep in between the two elements and ruin the cementing.

After this, the cemented doublet is examined with a magnifier for air bubbles, pits, lint, scratches, and any other cause for rejection. If bubbles or particles of flint are discovered between the elements, they must be decemented, cleaned, and re-cemented. However, if the bubbles are disk-like, they can usually be removed by heating the doublet slightly on a hot plate, to soften the cement, and then pressing the elements together a little closer. On the other hand, if the bubbles are flat or elongated, they are 'dry spots', and are caused by faulty cementing. In this case, the surfaces of the two elements have been in actual contact, with no cement between them and have sprung back, leaving the area free of all cement. When this trouble occurs, the elements must be decemented, cleaned, and re-cemented.

The overall diameter of the doublet must be checked as well, because, even though the elements are aligned correctly from an optical

standpoint, one may overhang the other sufficiently, due to faulty centering, to make too large an overall diameter.

Decementing.—Lenses cemented with thermoplastic cements can be decemented (delaminated and cleaned) by heating the doublet on a piece of heavy paper over a hot plate until the elements can be delaminated, and then cleaning the separated elements with a suitable solvent, such as alcohol.

Correcting Cemented Lenses

Although the individual elements of a compound lens or doublet may be accurately made, the cemented doublet may show poor definition, since either one or both surfaces may be distorted by this operation. When a compound lens has poor definition, it is advisable, before proceding with any correction, to decement the lenses, and test each element separately. If they are found to have been centered properly (see Chapter 13) and to have the correct curvature, they can be re-cemented and then corrected by hand polishing.

Some operators consider it advisable to anneal cemented lenses for several hours at temperatures between 105 and 140°F. when high precision work is desired. This can be done in addition to correcting by hand, or it may serve as an alternate method. In production work, the usual procedure is to inspect cemented lenses, and to hand correct only those which have poor definition.

Hand correction of cemented lenses of up to 1½ inches in diameter is done on a horizontal spindle carrying a pitch polishing tool. The lens is mounted on a dowel or handle with sealing wax. The diameter of the polishing tool is at least equal to that of the lens, and not more than 1/16-inch greater, and of such a radius of curvature that it can be lined with a layer of polishing pitch about 1.4-inch thick. The polishing tool is prepared, and used in the same manner as for standard polishing as discussed in Chapter 12, *Fine Grinding and Polishing Lenses*. It is customary to use circular grooves in the polishing tool.

PROCEDURE WITH PURE BUTYL METHACRYLATE AND THERMOSETTING CEMENTS

These cements differ from the thermoplastic cements just discussed, in that they are solidified or 'set' instead of being softened, by the application of heat. A detailed discussion of these cements will be found in Chapter 25, but it will suffice to state here that these cements fall into two general types, as shown in Figure 2001.

The first type is composed of pure butyl methacrylate cements. Cements of this type (which have one double-bond per monomeric molecule), behave like thermosetting cements at the temperature encountered in optical usage. However, at somewhat higher temperatures, they behave like thermoplastic materials, and can thus be re-melted and then reset; they can also be dissolved by the use of suitable solvents.

The second type of cements (which have two or more double-bonds per monomeric molecule) are composed of true thermosetting materials. This type is substantially insoluble and infusible within the limits of the particular organic compound represented by the monomeric molecule. Thus, once set by the application of heat, these cements cannot be re-melted and reset. Neither can they be dissolved by the use of solvents. They can be removed from glass only by detergent action or by chemical decomposition.

When using either of the above types of cement, the lenses are cleaned, the cement applied, and the doublets aligned in the same manner that is used for thermoplastic cements. But instead of setting the cement by cooling the cemented elements, they are baked at a temperature of 160 to 200°F. for 2 to 4 hours. As when thermoplastic cements are used, the cemented doublets are sometimes held in alignment with clamps while the cement is setting. However, the baking of lenses cemented with thermosetting cements and held in clamps may induce some strain or deformation in the lenses. Where it is practicable, this difficulty is avoided by giving the cement a preliminary 'set' that is sufficient to hold the elements in alignment

without the use of clamps before placing them in the baking oven. Another source of strain or warpage in the glass is that, although the glass expands during the baking process, the cement contracts slightly during final polymerization which takes place at the same time. The effect of this contraction is especially noticeable if the cement is heated unevenly, hence the importance of maintaining carefully-controlled temperatures in the baking oven.

Preparing the Cement

The time required to polymerize the pure butyl methacrylate and the thermosetting types of cements in the baking oven can be shortened somewhat, and the possibility of disturbing the alignment of the elements can be reduced, by a process of pre-polymerization which changes the cement nearly to its solid state, but still keeps it sufficiently liquid so that it can be handled efficiently by the cementing operator.

The process consists merely of heating the cement until it starts to thicken at a temperature of about 200°F. The longer the cement is heated at this temperature, the thicker it will become. The degree to which this pre-polymerization is carried depends on the skill or desire of the operator, some preferring it thicker than others. It must be remembered, however, that if the cement is too viscous, the result will be that the cement film between the lenses will be too thick also.

Applying the Cement

Although PKR-15 and HE-5 cements, which are used ordinarily as soft gels, may be distributed in bottles or vials and applied with glass rods, it has proved much easier and cleaner in practice to dispense them from collapsible tin tubes or 30 cc Luer syringes. The cement may be polymerized to a gel stage in the syringe, in the manner described in Chapter 25. It should be noted that UV-101 cement can also be gelled, if desired, but this cannot be done in syringes because it will creep between the barrel and the plunger and freeze them in position. While the pure butyl methacrylate cements do not gel, they may vary widely in viscosity. The best cements of this group have viscosities of about 30 poises and may be dispensed from any suitable type of container.

Uniting the Lenses

It is necessary to use pure butyl methacrylate and thermosetting cements that are of the desired viscosity. If gelled cements are too soft, it is not possible to bake the lenses without aligning fixtures. If the cement is too thick, *e.g.*,—if a thermosetting cement has been preheated too much and has started to set —any movement of the crown across the flint will result in the entrapment of bubbles which cannot be removed.

The procedure for applying pure butyl methacrylate and thermosetting cements to optical elements is basically the same as is used with thermoplastic cements. The flint element is placed on the work table with the concave side up and a generous amount of cement is dropped, poured, or extruded into it. The crown is then placed on the flint and the cement is squeezed out by the usual procedure. Then the excess cement is cleaned off the elements.

In some cases it is helpful to pre-warm the elements before cementing with either PKR-15, UV-101, HE-5, or field cement. However, when using pure butyl methacrylate cements, the elements are pre-warmed very little if at all, to prevent the cement from setting before the elements have been aligned. Before alignment, however, the doublet must be warmed on a hot plate to set the cement enough to hold it in a fixed position for alignment and movement to the baking oven. This warming period is usually from 5 to 7 minutes, but the doublet must be watched so carefully during this warming that it is not considered a practical production process to use butyl methacrylate in this manner.

Next, the crown and flint elements are aligned for concentricity and placed in an oven where they are baked from 2 to 4 hours at 160 to 200°F. The only difficult part of this procedure is to keep the elements aligned during at least the first part of the baking period.

Establishing Concentricity and Cementing. —There are two procedures used for holding lenses in alignment during baking.

With Clamps.—The first method, which is mechanical, is to place the doublet in an aligning fixture or clamp. Such a method serves a double purpose, *i.e.*, alignment of the elements and preservation of alignment during the baking process. This procedure can be used with all pure butyl methacrylate and thermosetting cements. It is the only system which can be successfully employed with ungelled cements including all pure butyl methacrylate cements, UV-101 and field cement. (UV-101 and field cement can both be gelled, but in actual practice neither one is used as a gel.)

The use of aligning fixtures, such as clamps, for holding lens doublets in alignment during baking has two disadvantages. The number of clamps that are required to maintain rapid production is likely to be costly and, in addition, they may cause or greatly aggravate strains and surface deformations.

Without Clamps.—With gelled cements such as PKR-15 and HE-5, an optical aligning procedure is available. This avoids the use of mechanical aligning fixtures.

The gelled cement is usually applied to elements which have been warmed to between 130 and 160°F. A generous amount of cement should be used. The crown element is then placed on the flint element, the bubbles are worked out, and the excess cement is wiped off. If, at this stage, the cement is too thin to hold the elements in a fixed position for alignment and movement to the baking oven, it is thickened by warming the doublet. The doublet may be heated on a hot plate, or else by use of a portable heating unit consisting of an infrared light or a nichrome element held over the doublet. Generally the cement will be set sufficiently after heating for from 30 seconds to 2 minutes. Next, the elements are aligned by optical collimation. They are then placed in an oven and baked, as noted above.

The alignment can also be made by aligning the edges mechanically if the greatest accuracy is not required. The critical part of the whole procedure is to move the lens, after alignment, to the baking oven without destroying the alignment. Special forceps or other devices may be employed, and the element should be held as nearly horizontal as possible at all times. Various baking periods have proved successful, but those used most commonly are from 2 to 4 hours at 160 to 200°F. Sometimes very precise work is heated for much longer periods at lower temperatures in an attempt to eliminate strains and deformations.

Decementing

Decementing of lenses consists of two steps, the first of which is the separation or *delamination* of the separate elements, and the second of which is the *removal* of cement which adheres to the separate delaminated elements.

Delaminating lenses that have been cemented with pure butyl methacrylate or thermosetting cements is more complicated than when thermoplastic cements have been used. Most optical cementing joins together glasses with different coefficients of expansion, the principal exceptions being prism assemblies. All delaminating methods now in common use are based on raising the temperature of the doublet or subjecting it to thermal shock. With either method, one element tends to expand or contract more rapidly than the other and, when the temperature change is great or rapid or both, the effect is to develop a shearing strain between the cement layer and the glass. Thus shearing strain per unit thickness of the cement will increase as the thickness of the cement film decreases. The shearing stress is produced because the cement or the glass must bend or stretch as a result of the differences in thermal expansion. If this deformation is not sufficient either the glass or the cement film must break, or the bond between the cement and the glass must loosen.

Strains arising from temperature changes or thermal shock which can be absorbed by the bending or stretching of the glass or cement are useless for delamination purposes. On the other hand, if the shock is so great that the glass breaks, the method is of no use either. In practice it has been established that *properly controlled* thermal shock causes PKR-15, UV-101, field cement, and HE-5 cement to lose adhesion with the glass, before either the glass breaks or the cement film softens. This action seems to be aided by the presence of liquids,

TABLE OF SPECIAL DELAMINATING METHODS USED WITH OPTICAL CEMENTS

METHOD OF DELAMINATING		TYPE OF CEMENT				
		PURE BUTYL METHACRYLATE Must Be Melted or Dissolved. Thermal Shock Not Effective	THERMOSETTING Cannot Be Melted or Dissolved. Thermal Shock Employed, Preferably in Presence of a Liquid			
Agent	Process	HE-2 and Others	PKR-15	UV-101	Field Cement	HE-5
(a) Hot Castor Oil	Melting	1	—	—	—	—
(b) Butyl Methacrylate Solvent	Dissolving	3	—	—	—	—
(c) High Boiling-point Liquid	Thermal Shock	—	1	1	1	1
(d) Alcohol and Acetone	Thermal Shock	—	2	—	—	2
(e) Dry Heat*	Melting	2	—	—	—	—
	Modified Thermal Shock	—	3	—	—	3
(f) Boiling Water**	Modified Thermal Shock	—	4	—	—	4
(g) Acetone and Dry Ice**	Thermal Shock	—	5	—	—	5

*May be used only on lenses 1-inch or more in diameter.
**Use very limited—employed only as 'last resort' in special cases.
NOTE: The figures indicate the methods of delaminating applicable to the different types of cement in order of preference.

Figure 2014.

particularly those of low surface tension and viscosity.

The behavior of pure butyl methacrylate cements differ from those cements just mentioned in that they actually soften at higher temperatures and the cement film itself fails. The bond between these cements and the glass is almost never broken in delaminating operations. Because of this fact, any doublets cemented with HE-2 or other pure butyl methacrylate cements cannot be decemented with too rapid a thermal shock. In other words, even though a thermal shock is violent enough to break the glass, it will not break the cement or the bond. Therefore, the best method to decement lenses cemented with butyl methacrylate cements is to heat them until the cement softens and the elements can be forced apart. It is important that this heating be done slowly enough so that stresses sufficient to cause glass breakage do not occur before the cement softens.

Methods of Delaminating.—Some specific methods (see Figure 2014) that have been successful in delaminating lenses that have been cemented with pure butyl methacrylate and thermosetting cements are outlined below. However, before proceeding to delaminate any considerable number of elements, it is advisable to develop a detailed process on a small scale. This is because the number of types of optical glass used and the variety of sizes and shapes of optical elements, make it difficult to predetermine an exact procedure. By careful control of methods, temperatures, etc., it is possible to hold breakage during decementing to 1 per cent. However, if the operation is not properly organized and supervised, excess breakage may exceed any salvage value of the elements being processed.

*Lenses Cemented with Pure Butyl Methacrylate.** *(a)* Hot Castor Oil.—The elements

Lenses cemented with pure butyl methacrylate may also be separated as described under "(e)* Dry Heat." (See Figure 2014.)

are heated for 5 minutes in castor oil (glycerine must not be used) at from 350 to 450°F. to soften the cement, and then the elements are forced apart, using asbestos gloves. This operation is best carried out under a ventilated hood. Cooling should be slow and away from drafts to prevent breakage.

(b) Pure Butyl Methacrylate Solvents.—The elements are immersed in solvents for butyl methacrylate, such as acetone, ethyl acetate, etc. Decementing by dissolving the cement films is a very slow process and is used but seldom.

Lenses Cemented with Thermosetting Cements. *(c)* High Boiling-point Liquid.—The elements are plunged at room temperature into castor oil, gylcerine, or other high boiling-point liquid that has been heated to from 350 to 450°F. One or two per cent of solid 'Aerosol OT' may be dissolved in the oils if desired—some manufacturers consider this of assistance in breaking the bond. A 'pop' or 'cracking' noise will be heard from 5 seconds to 2 minutes after immersion, when the thermal expansion breaks the cement bond. The elements are removed about 30 seconds later. The exact temperature of the oil must be established for different sizes of elements by trial and error, remembering that too high a temperature will cause glass breakage. The same precautions noted above under "*(a)* Hot Castor Oil" should be observed.

(d) Alcohol or Acetone. — The elements are heated to from 150 to 200°F. on a hot plate, and dropped into alcohol or acetone at room temperature. This operation is repeated three or four times if necessary. (This method is not successful for UV-101 or field cement.)

(e) Dry Heat.—The elements are heated to from 350 to 450°F. on a hot plate covered with fiber glass or asbestos cloth, and then pulled apart when interference rings appear throughout the lenses. This will take from 5 to 20 minutes on doublets about 2 inches in diameter. (This method is unsuccessful when UV-101 or field cement has been used, and is not recommended for lenses less than 1 inch in diameter.)

(f) Boiling Water. — The elements are placed in water, brought to a boil, and boiled for from 10 to 30 minutes until separated. This method has been used successfully on PKR-15 elements which resist other methods, but it is too slow for most production work. (This method is not successful with UV-101 or field cement.)

(g) Acetone and Dry Ice.—Elements at a temperature of from 70 to 80°F. are dropped into a mixture of acetone and dry ice which is at a temperature of about —60°F. This method is useful with PKR-15 when the doublet consists of elements made from the same type of glass. (This method is not successful with UV-101 or field cement.)

Removing the Cement from the Elements. *Pure Butyl Methacrylate.*—Pure butyl methacrylate is removed from the elements by dissolving in such solvents as esters, ketones, ethyl acetate, or acetone. Usually soaking in a solvent for a few minutes, and then rinsing in clean solvent, and drying with a soft cloth is sufficient.

Thermosetting Cement.—Since thermosetting cements are insoluble, they can be removed from the elements only by detergent action or chemical decomposition.

Generally the cement can be removed by soaking the elements in a warm solution containing a small percentage of soap or a detergent such as 'Orvus' or 'Aerosol'. After 10 or 15 minutes soaking, the elements are rubbed lightly with a piece of soft cloth or absorbent cotton, and then are rinsed and dried. It may be necessary to repeat the procedure once or twice. When repeated efforts fail, more stringent methods are necessary. Usually soaking for 10 to 20 minutes in a warm 2 per cent solution of trisodium phosphate will remove any residual cement. In extreme cases the lens may be immersed in a sulphuric-acid sodium-dichromate cleaning solution.

CENTERING AND EDGING CEMENTED LENSES

Optical Research, Incorporated. — This company has developed a modification of the conventional method of centering and edging the flint and crown elements and then cementing them together to form doublets. In this modified method, the flint element is centered

in the usual manner and then edged until its periphery is circular, but not down to the finished diameter. Next, the crown element, which has not as yet been edged, is cemented to the flint element. This is done by using thermoplastic cement and, while the cement is still warm (or re-heated, if necessary, to soften it), the doublet is aligned optically by any suitable aligning device such as the collimator aligning instrument shown in Figure 2004. When the elements have been aligned and the cement has set. the doublet is mounted on an edging machine as a single unit, and both lenses of the doublet are edged simultaneously.

By use of this method, the doublet has a better edge than when the elements are edged separately, but it is essential that the flint be centered and partially edged first. If this is not done, coincidence of the geometric and the optical axes may not be obtained in the doublet. This results in some loss of definition, and, in addition, makes it very difficult to re-cement a doublet if it is separated in service.

Edge Coating

Edge Sealing.—Sealing the edge of a doublet after thermosetting cements have been used is helpful in preventing edge separations upon aging. The edge of the lens is treated with a thin coat of water-resistant lacquer, for the composition of which there are many suitable formulas available. One that has been used at Frankford Arsenal with satisfactory results is given below:

lampblack	3.7 per cent
polystyrene (Catalin Corporation)	4.5 per cent
flexalyn (Hercules Powder Company)	9.0 per cent
toluol	26.8 per cent
trichlorethylene	56.0 per cent
	100.0 per cent

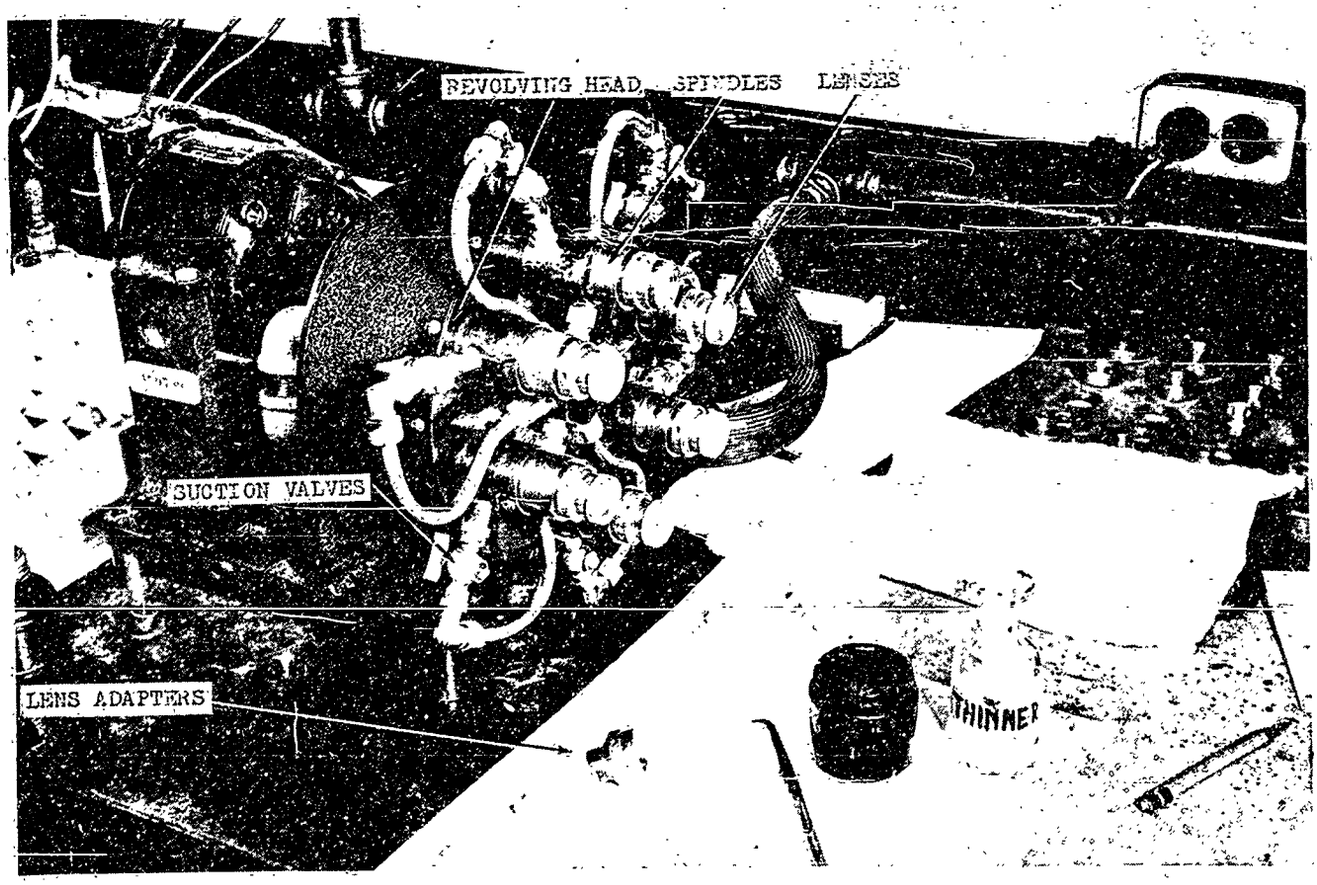

Minneapolis–Honeywell Regulator Company

Figure 2015.—Machine for Coating the Edges of Either Single or Multiple Lenses.

The best method of applying this lacquer is to hold the lens between two shafts equipped with soft rubber ends. The shafts may be rotated by hand or by a motor, and the brush containing the ink is held against the edge of the doublet. This places an even lacquer film about 0.025-inch thick all around the edge of the lens.

Edge Painting.—At times it is necessary to paint the edge of a lens in order to reduce interval reflection. The Minneapolis–Honeywell Regulator Company has developed a device which eliminates much of the handling that is required in this operation and, at the same time, permits the paint to be applied more easily and more uniformly.

It contains a revolving head (see Figure 2015) that carries six spindles. Each spindle is equipped with a lens adapter or chuck, in which the lens is held by suction. In operation, a lens is placed in the lens adapter on the spindle nearest the operator and suction is applied to hold the lens in position by turning the suction valve. Next, the spindle is started and the edge of the lens is painted by holding a brush against the edge of the rotating lens. After the paint has been applied, the revolving head is turned, or 'indexed', through one position which brings another spindle in front of the operator. The process is repeated until all six spindles are loaded. When the head is indexed the seventh time, the lens that has been painted first is returned to the position in front of the operator, who then removes the lens, which has dried during the time that has elapsed. Then a new lens is mounted on the lens adapter, painted, and the head revolved as before. This process is repeated with a lens being removed, and another mounted and painted, each time that the head is indexed.

While this machine was developed for painting the edges of lenses to reduce internal reflections, it is equally suitable for edge sealing to prevent separation of cemented lenses. Either single or multiple lenses may be mounted in the lens adapters.

CHAPTER 21

CEMENTING FLATWORK

	Page No.
1-meter M1916 Range-finder Ocular Prism Assembly.	2103
Cementing the "A," "B," and "D" Prisms.	2104
Cementing the "C" Prism (Rhomb).	2105
Testing and Correcting the Ocular Prism Assembly.	2106
Testing Fixture.	2106
Aperture.	2108
Halving.	2108
Coincidence.	2109
Correcting Errors in Coincidence.	2109
Correcting Leaning Errors.	2110
Finishing Operation.	2110
80-cm M1914 and 80-cm M1914 M1 Range-finder Ocular Prism Assemblies.	2110
80-cm M1917 Azimuth Range-finder Ocular Prism Assembly.	2110
1-meter M9 Range-finder Ocular Prism Assembly.	2112

The assembly of three types of range-finder ocular prism clusters are discussed in this chapter (see Figure 2101). The main distinction between the first two types is that one type contains a reticle slab in its components, while the other type does not. Figure 116 shows an ocular prism assembly which contains a reticle slab, and also illustrates the four prisms ("A," "B," "C," and "D") which are common to both of the first two types.

Figure 111 shows additional details, including nomenclature, of the "C" (rhomboid or rhomb) prism which is common to both of the first two types.

Figure 115 shows additional details, including nomenclature, of the ocular "A" prism common to both of the first two types, though it may be noted that the width and exact location of the silver strip, as well as the angle (45° in this figure), are not always identical in the ocular "A" prisms discussed below.

The 1-m M1916 ocular prism assembly, a typical example of the type that does not have a reticle slab, is described in considerable detail. (This prism assembly has an etched line on its ocular "A" prism.) Two similar prisms are used in the 80-cm M1914 M1, and the 80-cm M1914 range finders. The ocular "A" prisms in both of these are small and, in the latter, the ocular "B" prism is small as well.

The 80-cm M1917 azimuth range-finder ocular prism assembly is an example of the second type that contains a reticle slab cemented between the ocular "A" and "B" prisms. The optical system, of which this azimuth prism assembly is a part, is such that special care is required in its assembly.

The third type of range-finder ocular prism assembly discussed, is shown in Figure 2118. While the function of this third type is similar to that of the first two types, it differs considerably both in the nature of its component elements and in the methods used for its assembly. Details of this third type are taken up at the end of the chapter.

Ocular prism clusters are assembled by cementing the components together with a clear, transparent, optical cement, into one optical unit. All elements that are to be cemented are thoroughly cleaned and inspected for imperfections, with special emphasis being placed on the faces that will be in the focal plane of the eyepiece, since any imperfections on these faces will appear in the field of vision.

TABLE OF COINCIDENCE TYPE OCULAR PRISMS WITH UPPER HALF-IMAGES INVERTED

TYPE	COMPONENT ELEMENTS	DESIGNED BY	MANUFACTURED BY	USED IN RANGE FINDER MODELS
1	Ocular "A" Prism (with silvered strip) Ocular "B" Prism Ocular "C" Prism (rhomboid or 'rhomb') Ocular "D" Prism (wedge)	Bausch & Lomb	Bausch & Lomb	1-m M1916 80-cm M1914 (small) 80-cm M1914 M1
2	Ocular "A" Prism (with silvered strip) Ocular "B" Prism Ocular "C" Prism (rhomboid or 'rhomb') Ocular "D" Prism (wedge) Reticle Slab	Bausch & Lomb	Bausch & Lomb	80-cm M1917 AZ (azimuth type)
3	Roof-angle Prism Separator Prism Bottom Prism Right-angle Reflecting Prism Reticle	Barr & Stroud	Research Enterprises, Ltd.	1-m M9 1-m M9A1
			Eastman Kodak	1-m M7 1-m M7A1

Figure 2101.

The function of an ocular prism assembly, as used in range finders, is to receive and transmit the images from the left and right objectives of the range finder, and to combine them in the focal plane of a common eyepiece, as well as to separate the field of view into two parts. (The ocular prism assemblies discussed in this chapter provide an inverted upper half-image, and an upright lower half-image when used in a range finder and observed through the eyepiece, see Figure 2112.)

The alignment of the component elements is most important, as it controls the position of the two half-images. With most types, one prism face bears a silver strip which reflects the image formed by one objective, and it is the edge of this silvered strip which forms the line dividing the two fields.

Because the component elements of ocular prism assemblies are rather difficult to align with sufficient accuracy, the usual custom is to assemble them as carefully as possible with a micrometer gage and a protractor, and then test the assembly for accuracy. After this test, it is often necessary to soften the cement, move one or more elements with relation to the others, and then repeat the test. Sometimes this correction process must be repeated several times before the finished ocular prism assembly is acceptable. The necessity for using this trial and error method of assembly can be avoided by making the elements to extremely close tolerances, and performing the assembly in a carefully-built jig. Unfortunately, however, this latter method requires expensive equipment, and can be justified only when a comparatively large number are to be assembled.

When a pure butyl methacrylate or a thermosetting cement (see Chapter 20) is used, however, a special fixture, having a number of set screws which are used to move the component elements into their proper position and hold them until the cement has been set by baking, must be employed. The detailed procedures discussed in Chapter 20 for handling the various kinds of cements (thermoplastic, pure butyl methacrylate, and thermosetting) that are used in assembling optical elements are the same, whether lenses or prisms are being processed. In this chapter, use of Canada balsam and other thermoplastic cements is described in cementing ocular prism assemblies of types 1 and 2, while the use of pure butyl methacrylate cement is described in cementing type 3 ocular prism assemblies.

1-M M1916 RANGE-FINDER OCULAR PRISM ASSEMBLY

The following paragraphs describe the detailed procedure for assembling, cementing, and testing the 1-m M1916 ocular prism.

As shown in Figure 2101, the 1-m M1916 ocular prism assembly is composed of four prism elements:

1. Ocular "A" prism (with silver strip)
2. Ocular "B" prism
3. Ocular "C" prism (rhomboid or 'rhomb')
4. Ocular "D" prism (wedge)

Before cementing, the faces are examined for pits and scratches, especially the side face of the "A" prism (Figures 2102 and 2103) and the corresponding face of the "B" prism (Figure 2102), because these faces will be in the focal plane of the eyepiece, and any imperfec-

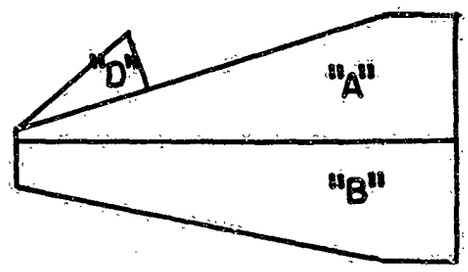

Figure 2102.—The "A," "B," and "D" Prisms of the 1-m M1916 Range-finder Ocular Prism Assembly in Position.

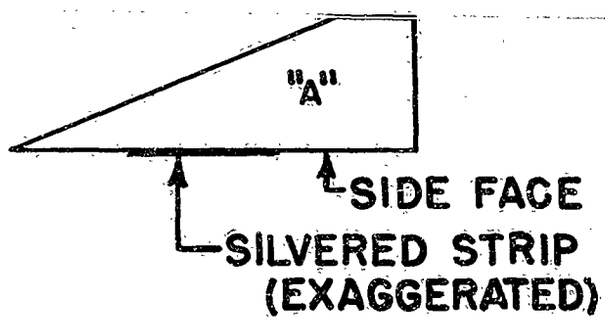

Figure 2103.—The "A" Prism of the 1-m M1916 Range-finder Ocular Prism Assembly.

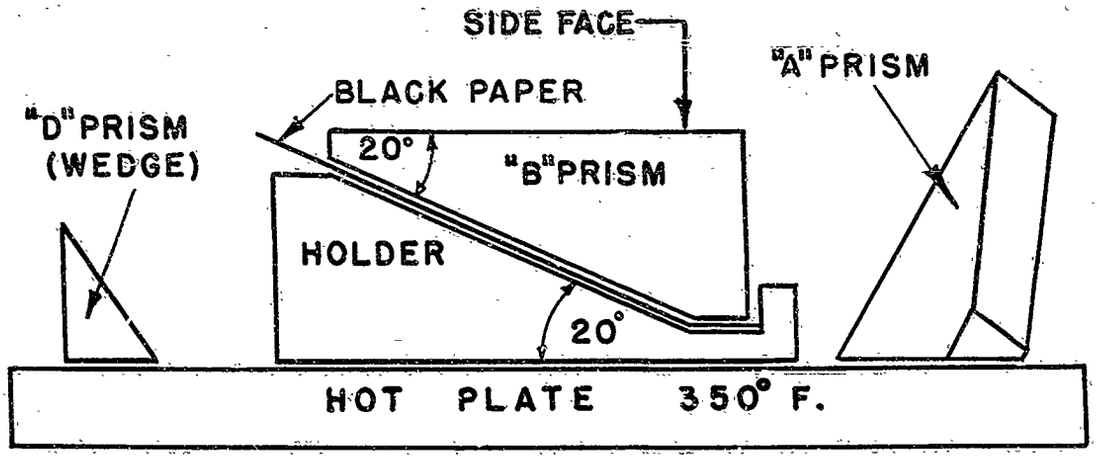

Figure 2104.—Assembling the 1-m M1916 Range-finder Ocular Prism.

tion there would appear in focus with the image. The silver strip (see Chapter 18) on the "A" prism must be a perfect mirror without holes, scratches, or stains, and its edge that is nearest to the end of the prism, must be a perfect unbroken line, because it is the line of demarcation between the upper and lower images.

Cementing the "A," "B," and "D" Prisms

A piece of heavy black paper is placed on the holder to facilitate the detection of cement bubbles and to prevent scratches (see Figure 2104). The purpose of the holder is to keep the side (upper) face of the "B" prism in a horizontal position. The "B" prism is cleaned thoroughly and placed in the holder. Canada balsam or other thermoplastic cement is applied to the side face of the "B" prism with a glass rod and, in addition, a little balsam is heated in a balsam bowl, made of a concave lens, both of which are covered with a perforated cardboard box to exclude lint and dust (see Chapter 20). The balsam, both on the prism and in the bowl, is heated at 330°F. until it has attained the proper hardness as described in Chapter 20. The exact heating time depends upon the amount of balsam used and the thickness of both the balsam bowl and prism, but is usually 4 to 6 minutes. While the balsam is baking, prisms "A" and "D" are cleaned thoroughly and placed on the hot plate. When the balsam is ready for cementing, the "A" prism is picked up with a pair of tweezers (see Figure 2105), taking care not to touch the polished faces, and the side face is placed on the side face of the "B" prism. However, instead of being set down flat, it is tilted and then 'rolled' onto the "B" prism. If this is done carefully, there will be comparatively few bubbles to be worked out.

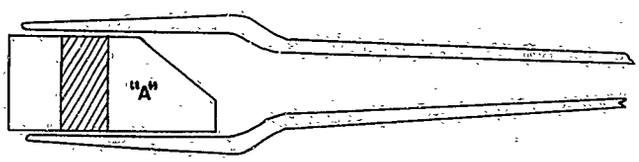

Figure 2105.—Picking up the Ocular "A" Prism with Tweezers.

Next, the balsam bowl is picked up with the tweezers, some balsam poured over the 25° face of the "A" prism and, after setting the balsam bowl down, the small "D" wedge is picked up with the tweezers and its non-hypotenuse face rolled onto the "A" prism. This 'rolling' or 'tilting' technique is used for cementing all ocular faces.

The next step is to lift all three elements off the holder as a unit (see Figure 2106), turn them over, and place them on any flat surface, such as a steel scale (disregarding any graduations) with the bottom face of the "A" prism down (see Figure 2107).

Using a micrometer depth gage, the end of the "A" prism is set at such a distance from the end of the "B" that "B" extends 0.050 inch beyond "A," as shown in Figure 2107. When the prisms are cool, they are removed from the scale by tapping it lightly, and the assembly is cleaned with alcohol. If it is dipped in alcohol,

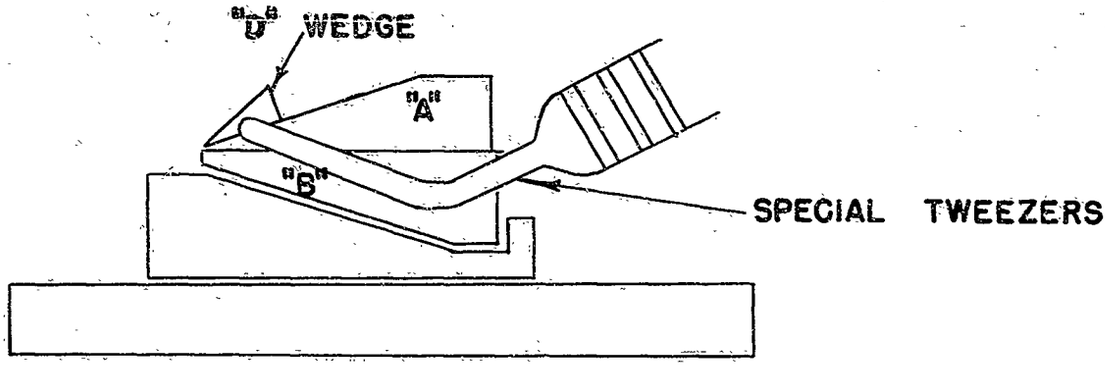

Figure 2106.—Lifting All Three Elements off the Holder at One Time.

it should be dried promptly, as soaking in alcohol will cause the alcohol to seep between the cemented surfaces.

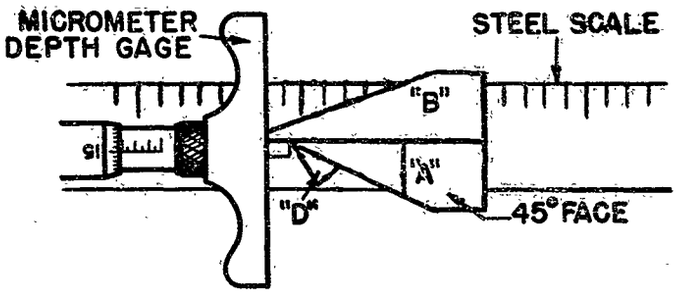

Figure 2107.—Position of Three Elements on a Steel Scale.

Cementing the "C" Prism (Rhomb)

After cementing the three elements ("A," "B," and "D") together, the "C" prism or rhomb must be added to complete the ocular prism assembly. The rhomb is cleaned and placed on the hot plate with one of its polished 135° faces in contact with a clean paper. Canada balsam is then applied to the upper 135° face and heated to the desired degree of hardness. Then the partly-assembled ocular is picked up in the hand, the bottom face of the "A" prism is heated gently over an alcohol lamp, and then this face is rolled onto the rhomb. Care should be exercised in heating the "A" prism, because if it is overheated, the cement between the "B" and "D" prisms will melt, and slippage will occur. After the air bubbles are removed from between the "A" and the "C" prisms the ocular assembly is turned over with a quick twist of the wrist so that the rhomb is on the top, as shown in Figure 2108. A depth gage and an adjustable protractor are used to determine the correct position for the rhomb (see Figure 2109).

The rhomb should be placed so that it is 0.840 inch from the end of the "A" prism along the focal plane (where "A" and "B" join) to side 1 of the rhomb, as shown in Figure 2110(b). The 'rhomb angle' is 49° 15′ and is formed by the emergent face of the wedge and either side 1 or 2 of the rhomb. Sides 1 and 2 of the rhomb are parallel, but for practical reasons the protractor is used against side 2. Moving the rhomb into the right position by means of a depth gage and protractor is a delicate operation and requires steady hands. The 'rhomb distance' and the 'rhomb angle' are checked alternately until the prism assembly cools enough for the cement to set, because any change in the position of the rhomb will affect the position of the images. The assembly is now laid down so that the top of the "A" prism is on the bottom and the rhomb is on top, as shown in Figure 2108, and is left until it is completely cool.

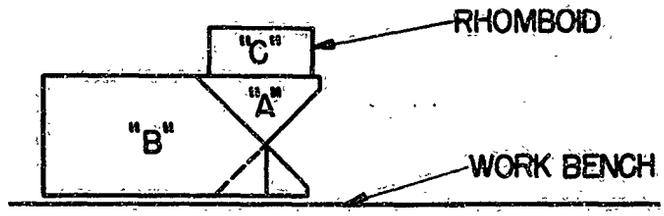

Figure 2108.—Placing the "C" or Rhomboid Prism on the "A" Prism.

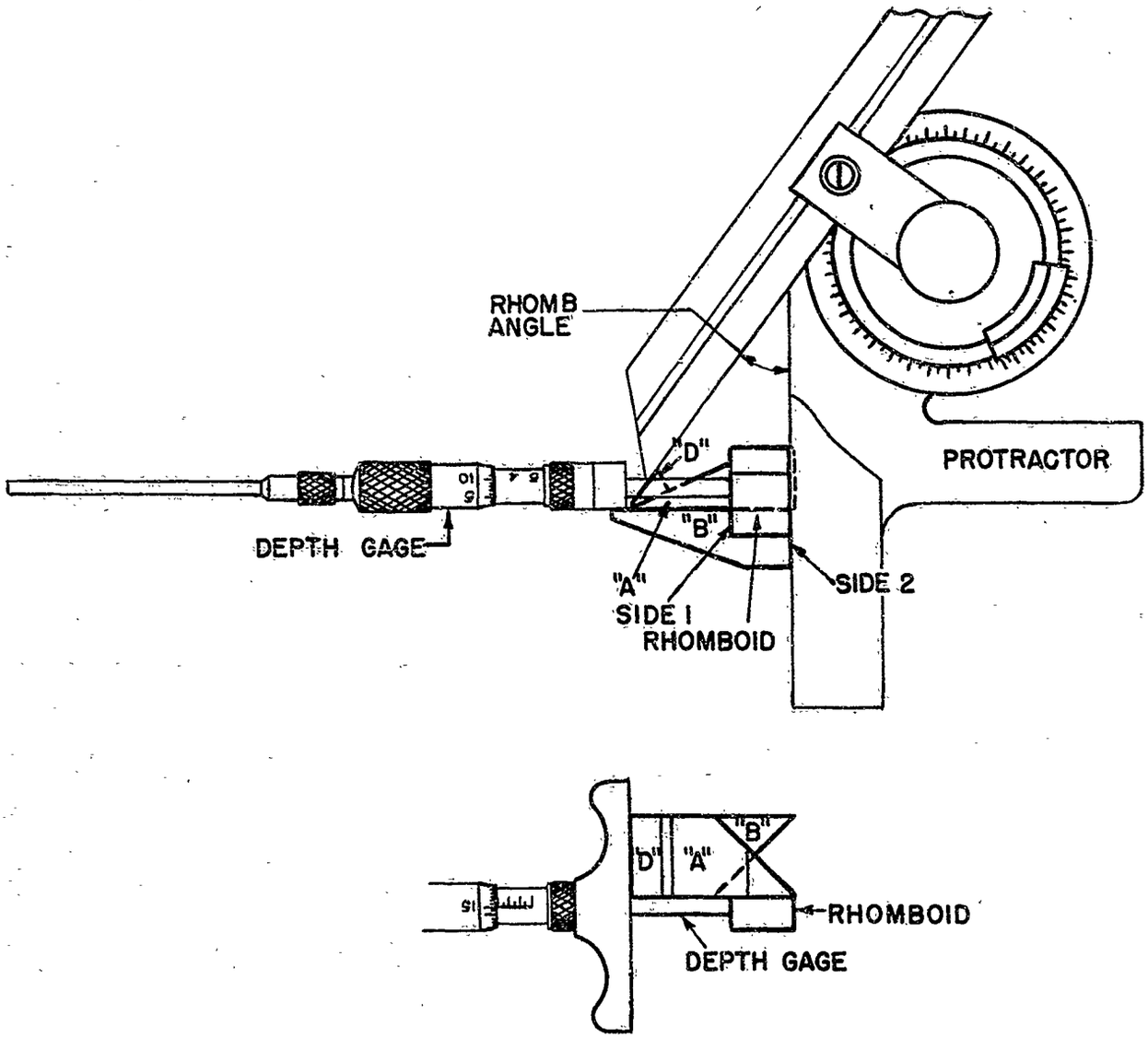

Figure 2109.—Setting the "C" or Rhomboid Prism by Using a Protractor and Depth Gage.

After cooling, the assembled prism cluster is cleaned carefully with alcohol, and is then placed in a testing fixture to check the alignment of the component elements.

Testing and Correcting the Ocular Prism Assembly

Testing Fixture.—The testing fixture, used for testing the alignment of the components of an ocular prism assembly, is usually a range finder (*e.g.*, Figures 101 and 102) which is either set to an outside target of known range, or else is placed an an aligning fixture that contains one fixed collimator and two adjustable collimators which can be set so as to simulate the range of an outside target. An example of the latter type of fixture is shown in Figure 2111.

When using an aligning fixture of the above type, the collimators may be set to simulate any convenient range, but 1000 yards is used ordinarily. The accuracy of the tests made by such a fixture on an ocular prism assembly can be determined only by subsequently placing the assembly in an actual range finder. Then

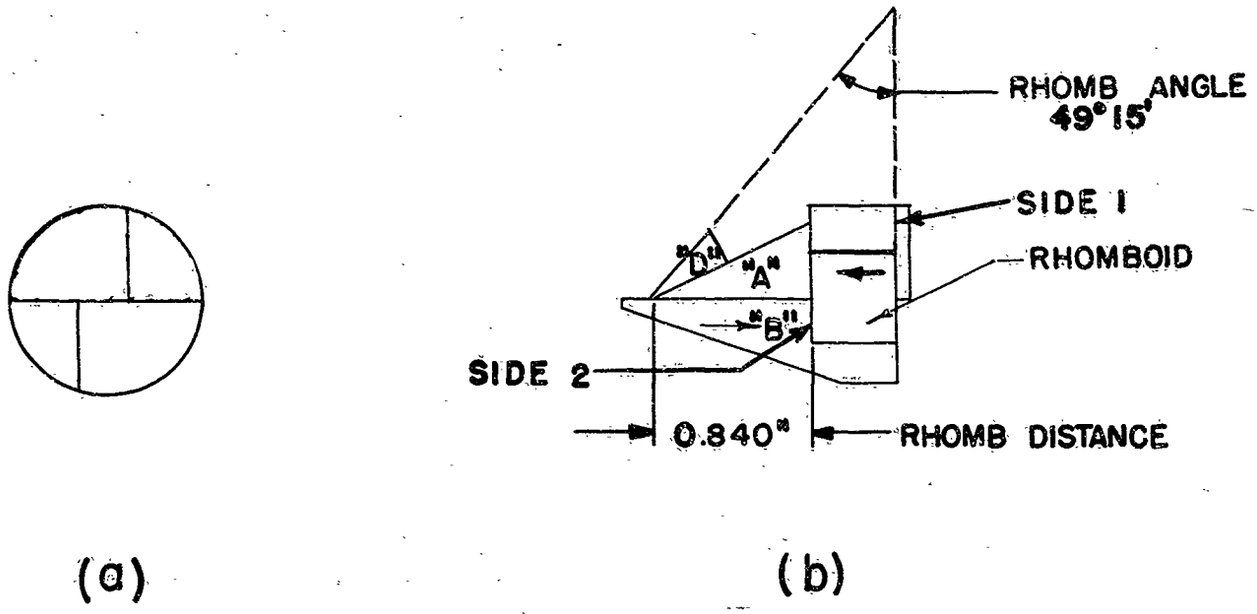

Figure 2110.—Position of Half-images and Method of Correction.

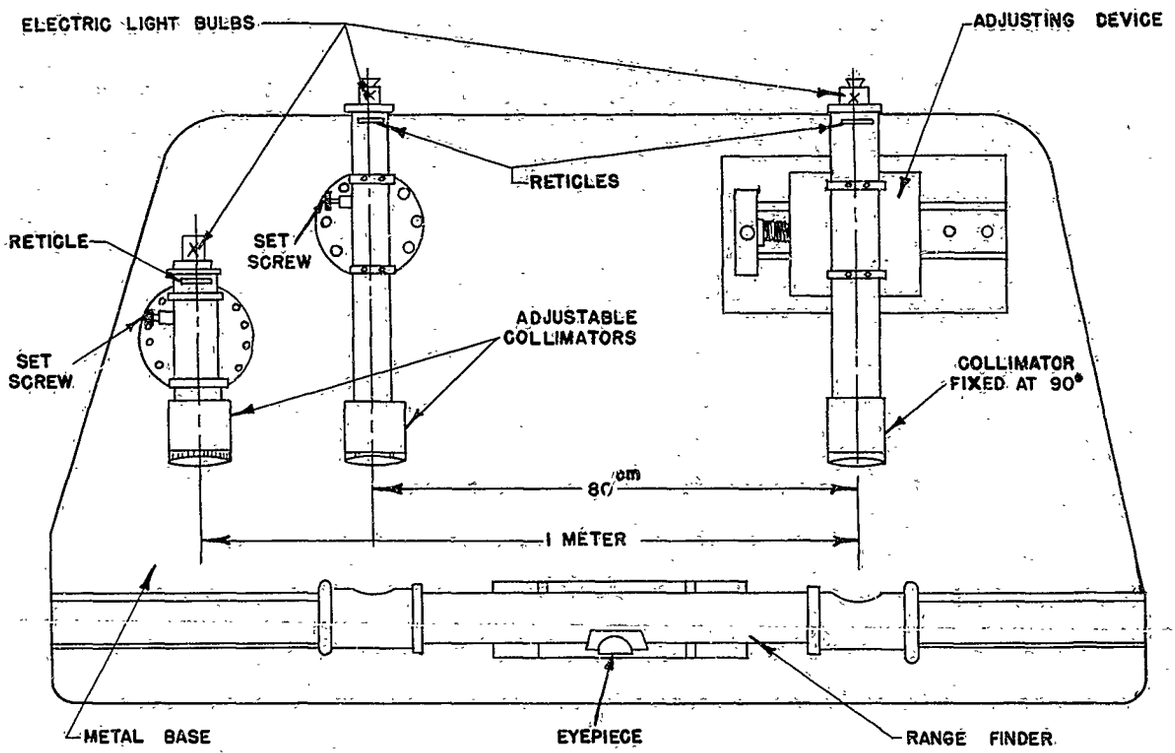

Figure 2111.—Collimator Aligning System for Testing the Ocular Prism Assembly.

if, by adjusting the range finder, the coincidence of the images of a known target falls within specified tolerances, it can be assumed that the fixture itself will give satisfactory results when used for testing the alignment of the components of any ocular prism assembly of a similar type. From the above explanation, it will be seen that the indications of the fixture are on a relative, rather than on an absolute basis.

Aperture.—The image observed when viewing a target through any of the ocular prism assemblies discussed in this chapter is composed of two separate half-images of the same portion of the target, one inverted with respect to the other. The inverted half-image, which is the upper one, enters the prism assembly through the "B" prism, and the upright half-image, which is the lower one, enters through the "C" prism, as shown in Figure 116. The aperture of an ocular prism assembly is governed by the parallelism of the rays of light of the two exit pupils which form the observed image. Each exit pupil is a reduced half-image of a corresponding entrance pupil in either the "B" or the "C" prism. When the two exit pupils are exactly superimposed the aperture of the ocular prism assembly is 100 per cent.

To measure the parallelism of the light rays traversing the ocular prism assembly, a dynameter, or exit pupil tester, is used to examine the image transmitted by the prism assembly as it rests in the test fixture. Since the test fixture brings the two images of the exit pupils into focus on a reticle at the focal plane of an eyepiece, it is in this plane that the degree of parallelism of the light rays can be measured.

Non-parallelism of rays, or the lack of complete overlap of the images, can be expressed either by measuring the width of that portion of an image of an exit pupil which is not covered or overlapped by the image of the other exit pupil (expressed in tenths of millimeters or in thousandths of an inch), or by estimating the percentage of the diameter of the image of one exit pupil which is covered or overlapped by the image of the second exit pupil.

Lack of parallelism is corrected by adjustment and experimental matching of component elements after the initial cementing and testing operation. (See Chapter 20 for decementing information.)

Halving.—When corresponding parts of the two half-images touch the halving line (which is established by the edge of the silver strip on the "A" prism), the ocular prism assembly is said to be halved correctly. If the half-images appearing in the upper and lower portions of the field are not equal, *i.e.*, if they are too low or too high, it can be said that there is an error in halving.

Halving errors can be corrected within reasonable limits by rotating the penta prisms in the range finder. If the halving error is too great to be corrected in this manner it must be corrected by changing the alignment of the component elements of the ocular prism assembly. At times, it may be necessary to go even further and replace a component element. If this is necessary, it is because the halving

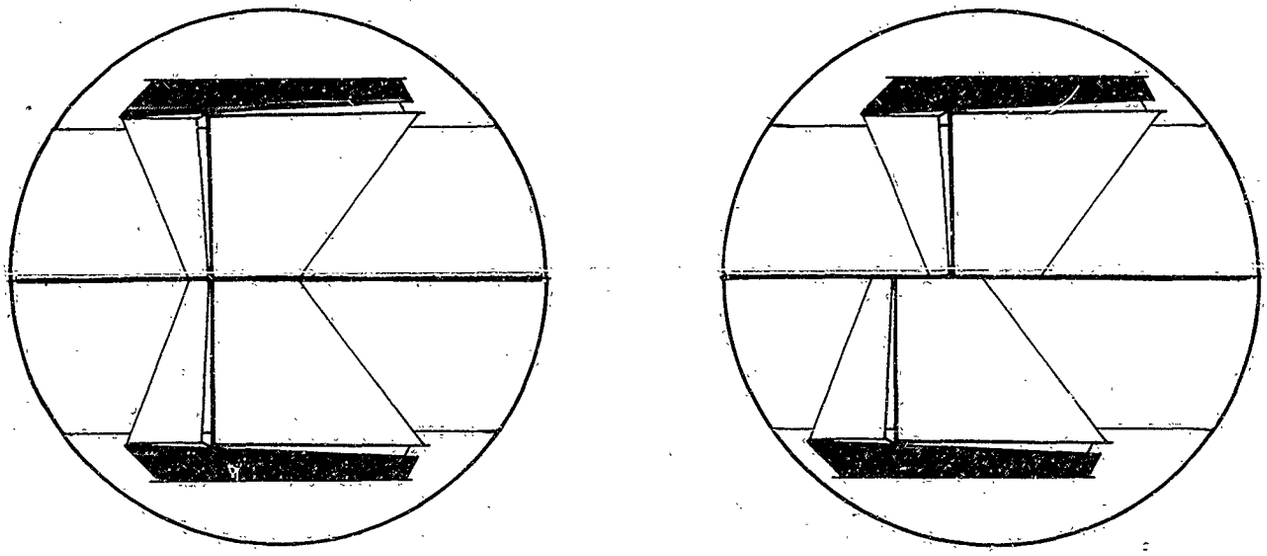

(a) No Error in Coincidence (b) Error in Coincidence

Figure 2112.—Images Showing Absence and Presence of Errors in Coincidence.

error is due to improper dimensions of the individual elements of the assembly. (See Chapter 20 for decementing information.)

Coincidence.—Error in coincidence is a result of the misalignment of the assembled components of an ocular prism assembly, and is shown by a lateral displacement of the two half-images when given a performance test in an instrument or a test fixture. (See Figure 2112.)

When a collimating fixture is employed, the prism assembly can be said to be in perfect alignment when the two halves of the half-images are in coincidence.

Since the adjustment of the ocular prism cluster in the assembled range finder is limited to a small adjustment for correcting range, it is necessary that the component elements be assembled so that the field of view consists of an inverted upper half-image and an erect lower half-image in the focal plane of the eyepiece, and also that the component elements, as well as the assembled unit, be within the necessary dimensional tolerances.

Correcting Errors in Coincidence.—If the two images are too far apart (in other words, if the error in coincidence is too great to be overcome by adjustment in the instrument itself), the alignment of the elements of the ocular prism assembly itself must be changed. If the position of the images is as shown in Figure 2110(a) the "B" prism must be moved back, in the direction of the arrow on "B" in Figure 2110(b).

In order to move the "B" prism, the rhomb must be taken off first, either by heating the rhomb over an alcohol lamp or by a short sharp blow on a side with a piece of wood, such as a brush handle. The prism assembly minus the rhomb is re-heated on a steel scale (Figure 2107) and the amount that the "B" prism overhangs the "A" prism is reduced from 0.050 inch to perhaps 0.025 inch. The rhomb is replaced in the manner described earlier, and the prism assembly is again examined in the testing fixture. If the range error, while still too great, is now such that a shift of less than 0.020 inch (see Figure 2115) of the rhomb will bring the images into coincidence, the rhomb is moved in the direction of the arrow on the rhomb shown in Figure 2110(b). This is done by decementing, and then re-cementing the rhomb in a new location determined by using a micrometer depth gage. This procedure must be repeated until the images are in coincidence.

If the images have a position as shown in Figure 2113(a), prism "B" is moved in the direction shown by the arrow on "B" in Figure 2113(b). Moving the rhomb in the opposite direction would have the same effect, but this is not permissible, since the 'rhomb distance' while it can be less, must not be over the initial setting of 0.840 inch from side 2 of the rhomb to the end of the "A" prism.

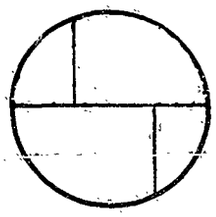

(a)

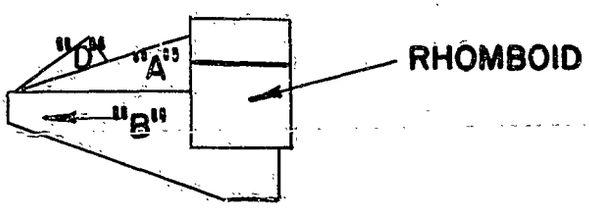

(b)

Figure 2113.—Position of Half-images when Checking Alignment of Prisms and Direction of Movement of "B" Prism for Correction.

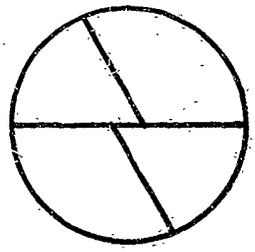

(a) TOWARD LEFT

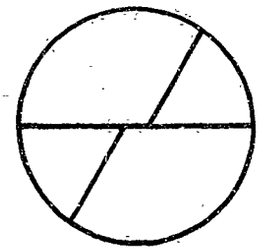

(b) TOWARD RIGHT

Figure 2114.—Examples of Lean of Half-images when Checking Cemented Prisms for Alignment.

Correcting Leaning Errors.—If the images are leaning, *i.e.*, if vertical lines of the target do not appear vertical in the test fixture, they can be straightened by changing the 'rhomb angle'.

If the images lean as shown in Figure 2114(a), the rhomb angle must be reduced; and if they lean as shown in Figure 2114(b), the rhomb angle must be increased until the images are straight. A change of a fraction of 1° (10 to 15 minutes) is usually sufficient.

The rhomb angle may vary with each individual ocular prism assembly, due to slight angular errors in the component elements. To compensate for an error of −15 minutes in the width, for instance, will require an increase in the rhomb angle of 15 minutes, in order to straighten the images, and vice versa.

TABLE OF RHOMB DISTANCES, WITH MAXIMUM DEVIATIONS, AND RHOMB ANGLES FOR TYPES 1 AND 2 OCULAR PRISM ASSEMBLIES

OCULAR PRISM ASSEMBLY	RHOMB DISTANCE (in inches)		RHOMB ANGLE (in degrees and minutes)
	Deviation	Distance	
1-m M1916	0.840	−0.020	49° 15′
80-cm M1914 (small)	0.780	−0.015	46° 05′
80-cm M1914 M1	0.840	−0.020	49° 15′
80-cm M1917 AZ	0.840	−0.020	50° 10′

Figure 2115.

Finishing Operation

As a finishing operation, that part of the "B" prism which extends beyond the end of the "A" prism is ground off with 'FF' abrasive, so that the "A," "B," and "D" prisms are flush at the end. (Nothing is ever ground off the end of the "A" prism.)

80-cm M1914 and 80-cm M1914 M1 Range-finder Ocular Prism Assemblies

The 80-cm M1914, and the 80-cm M1914 M1 range-finder ocular prism clusters may be assembled in exactly the same manner as the 1-m M1916 range-finder ocular prism assembly except that where the rhomb angle or the rhomb distance varies, a corresponding allowance must be made. See Figure 2115 which gives the rhomb distances, with maximum deviations, and the rhomb angles for the first four ocular prism assemblies discussed in this chapter. See, also, Figure 2116 which shows the difference in the silvering and relative size of the "A" prisms, as well as the difference in angles and relative size of "B" prisms, in the first four ocular prism assemblies discussed in this chapter.

80-CM M1917 AZIMUTH RANGE-FINDER OCULAR PRISM ASSEMBLY

The 80-cm M1917 azimuth range-finder ocular prism assembly consists of four prisms and an etched reticle which is called the 'reticle slab'.

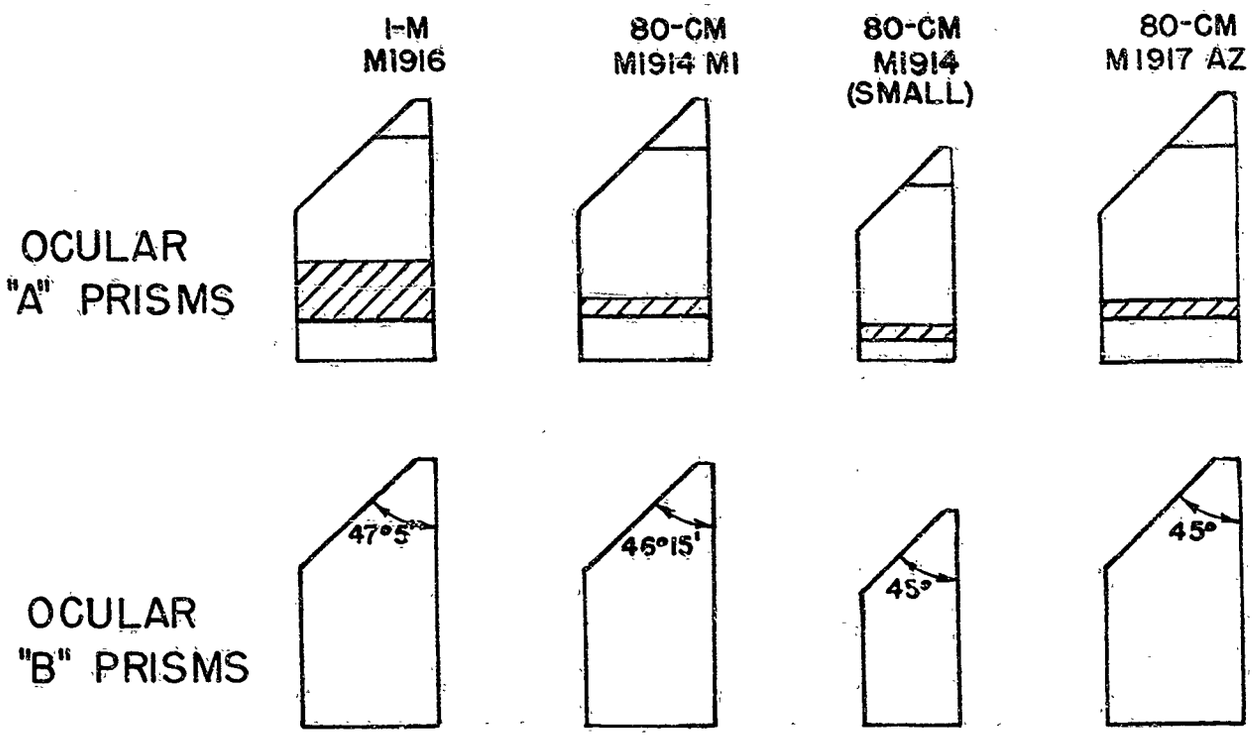

Figure 2116.—Comparison of Ocular "A" and "B" Prisms Used in Types 1 and 2 Range-finder Prism Assemblies.

In the azimuth-type range finder in which this ocular prism assembly is used, it is necessary to have a range scale appear in the field of the instrument. To accomplish this, the scale or reticle pattern is etched on a thin parallel plate. The resultant reticle slab is cemented between the "A" and "B" prisms in such a manner that the scale appears in the lower field, parallel to, and directly underneath, the dividing line.

When the range finder is used, the range of an object is determined by a method of triangulation, the base line of the triangle being the reticle slab contained in the ocular prism assembly in the instrument. The extreme shortness of this base line in comparison to the range, coupled with the fact that the two images brought together by the prism assembly undergo from two to five or more reflections in the ocular prism assembly alone, requires the highest precision in the processing and aligning of the component elements of the assembly.

Since this ocular prism assembly consists of five elements, the cementing is somewhat more difficult than that previously discussed. Prisms "A," "B," "D," and the reticle slab are cemented in one operation. The first step is to heat a clean slab over an alcohol flame, and then to cement the slab to the "B" prism (see Figure 2117). Then cement is poured over both the slab and the "B" prism, and the "A" prism is cemented to them. When this has been completed, the remainder of the process is the same as that already described for the 1-m M1916 ocular prism assembly.

While the elements are still warm, the slab is aligned by moving it into place with a pointed instrument, such as a needle in a pin vise. The slab should be set so that the range scale is parallel to and close to, but not touching, the halving line as established by the silver strip, and with a clearance of about half the length of one graduation (see Figure 2117).

If the top, or inverted image is out beyond the 15 mark, while the instrument is set for a range of 1000 yards, the "B" prism will have to be moved as described earlier, see Figures 2110(b) and 2113(b). After that, any necessary final adjustment is made with the rhomb, see Figure 2110(b).

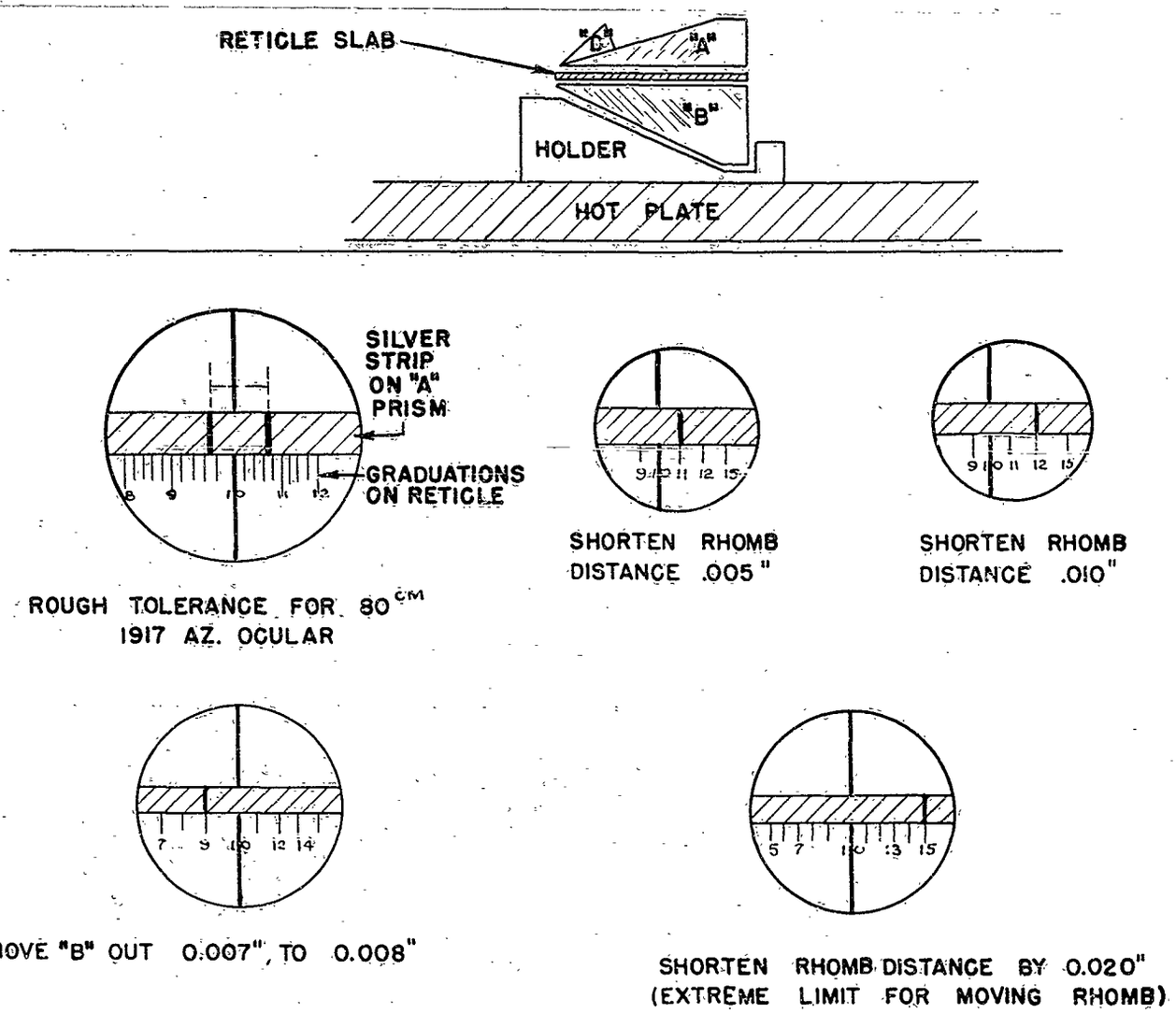

Figure 2117.—Location of Reticle Slab and Directions for Aligning the 80-cm M1917 AZ Ocular Prism Assemblies for Various Images Observed in Test Fixture.

1-M M9 RANGE-FINDER OCULAR PRISM ASSEMBLY

The 1-m M9 range-finder ocular prism assembly, shown in Figure 2118, is an example of the third type of ocular prism cluster listed in Figure 2101. The same unit may also be used in a 1-m, M7, 1-m M9A1, or 1-m M7A1 range finder, as shown in Figure 2101. This type of prism cluster, which functions like the first two types discussed in this chapter, is composed of five component elements—a roof-angle prism, an irregular-shaped separator prism, an irregular-shaped bottom prism, a right-angle reflecting prism, and a reticle. The reticle contains a short index line, and is also useful as a protection over the cemented division line between the roof-angle and the separator prisms.

A pure butyl methacrylate cement (HE-2, see Chapters 20 and 25) is used in the assembly, since this cement is unaffected by temperatures ranging from −40 to 160°F., and since it is also immune to prolonged atmospheric exposure under 95 per cent relative humidity. Thermosetting cements may also be used with slight variations in the technique described.

Assembly of this type of ocular prism cluster involves grinding and polishing, as well as cementing, operations. The following description gives the principal operations, in order of occurrence.

The first step is to place the separator and the roof-angle prisms in an aligning clamp, provided with suitable adjusting screws, and cement them together, as shown in Figure 2118. In cementing these prisms, it is important that the cement layer be thin so as to obtain a fine dividing line. A thin layer is obtained by manipulating the adjusting screws in the clamp, and must be carefully performed, as excessive pressure will cause strain, while the proper pressure forces the cement to a desirable thinness. Desirable thinness is determined by observing the interference bands in white light—the more brilliant the color, the thinner the layer. An absence of color means that the layer is thicker than about 0.003 millimeters. The thicker the cement, the longer it takes to polish the faces so that a satisfactory dividing line is obtained between the two prisms. Another consideration is that the lower refractive index of the cement makes it possible to use a more common, higher-index crown glass in the separator prism. This, in turn, makes it desirable to maintain the cement layer at about 0.001 millimeter. When the cement layer is of the desired thickness, the clamp with its elements are put in an oven at about 160°F. for about 6 hours.

The cemented roof-angle and separator prisms are ground, first, on the faces which are to contact the bottom prism and, second, on the faces which contain the dividing line that will delimit the two half-images. These same faces are then polished, in the same order.

The right-angle reflecting prism, and the roof-angle and separator prism combination are cemented to the bottom prism in one operation. At the same time the four-prism unit is aligned optically. This cementing operation is accomplished in a separate clamp with suitable adjusting screws, and the adjustments are made while the cement is soft. Sufficient cement should be used to enable the parts to be moved without the cement drying out at the edges. Alignment is checked in the optical sys-

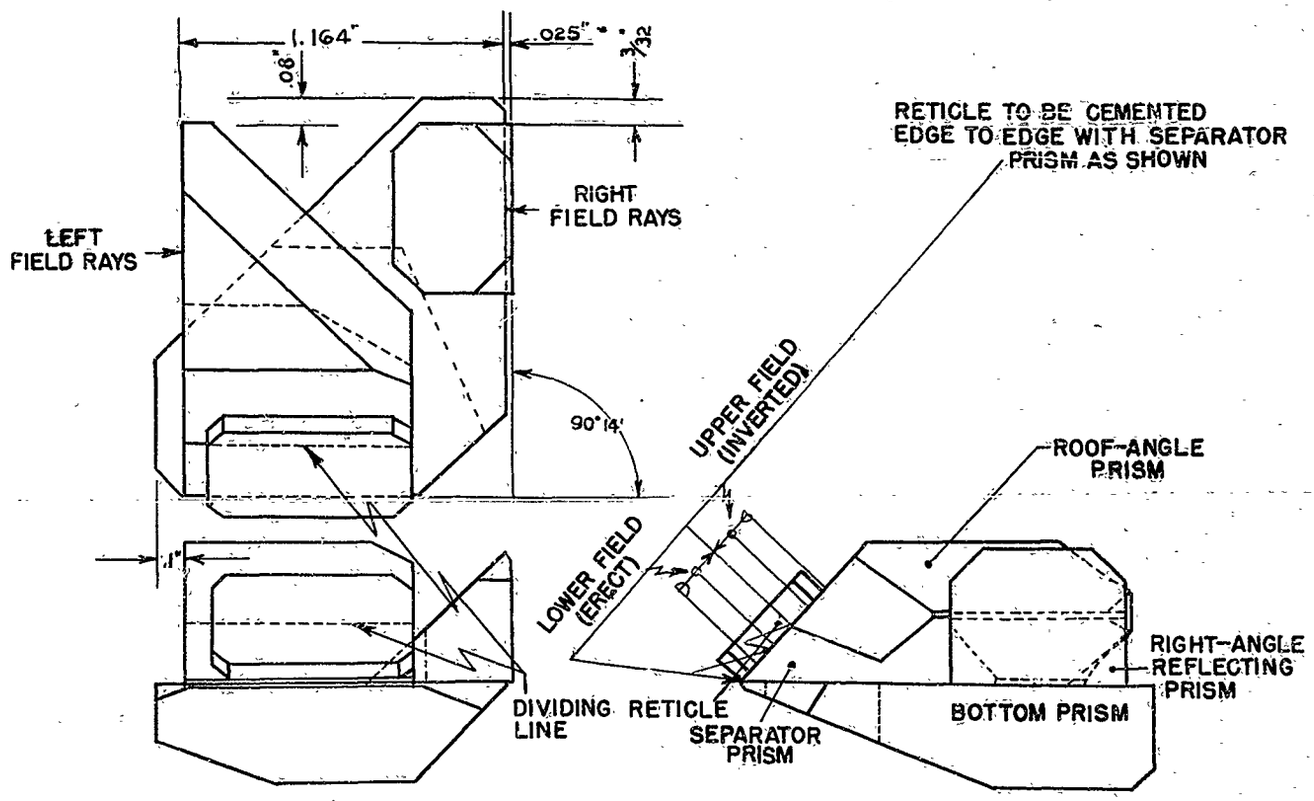

Research Enterprises Limited

Figure 2118.—1-m M9 Range-finder Ocular Prism Assembly.

tem of a range finder, or in a test fixture containing a range finder, as described above.

After cementing and alignment, the clamp together with the four aligned prisms is placed in an oven and the cement polymerized at 160°F. for 4 hours. (It should be noted that the polymerization in the first cementing operation is for a longer period. This is done in order that the cement be hardened to a greater degree than in the second cementing.)

The last operation in assembling the ocular prism assembly is to cement the reticle to the cemented four-prism unit, using the same fixture that is employed in the second cementing operation. This is done as a final operation because it permits the re-polishing of the faces containing the line dividing the two half-images, without decementing any of the four cemented prisms. Re-polishing of these faces sometimes becomes necessary because after the reticle is cemented in position, minor defects are discovered through use of the test fixture; it then becomes necessary to remove the reticle to polish out these defects. Thus, being able to remove the reticle without disturbing the rest of the assembly is a distinct advantage. Also, minor air pockets may sometimes develop along the dividing line. The practice of cementing the reticle in place last, allows the fresh cement, which acts as a solvent for the polymerized cement, to fill in these air pockets.

After the reticle is cemented in place, the entire ocular prism assembly is polymerized at 160°F. for 2 hours.

If, at any polymerization period, the prism assembly becomes cemented to the clamp, it is easily removed by heating on a hot plate. The high conductivity of the metal in the clamp permits softening of the cement between the clamp and the prism cluster, before affecting the cluster itself.

CHAPTER 22

OPTICAL FLATS AND TEST GLASSES

	Page No.
Reference Pieces.	2203
Cleaning the Surfaces.	2203
Viewing the Fringes.	2203
Fringes as Units of Measure.	2204
Testing Spherical Surfaces.	2204
Sources of Error.	2208
Size of Reference Pieces.	2209
Diameter.	2209
Optical Flats.	2210
Test Glasses.	2210
Thickness.	2210
Testing the Surfaces of Optical Elements.	2210
Optical Flats.	2210
Test Glasses.	2210
Testing the Accuracy of Reference Surfaces.	2210
Optical Flats.	2210
Three-plate Method.	2210
Test Glasses.	2211
Measuring the Radius of Curvature.	2211
Mechanical Methods.	2211
(a) Using a Ring Spherometer.	2211
(b) Using a Single-contact Slide Spherometer.	2212
Optical Methods.	2212
(a) Microscopic Method for Concave Elements.	2213
(b) Foucalt Method for Concave Elements.	2213
(c) Interference Method for Flat or Convex Elements.	2213

	Page No.
Manufacturing Reference Pieces.	2214
Optical Flats.	2215
The Pedestal.	2215
Normal Polishing Stroke.	2215
Polishing Tools.	2215
Temperature Equilibrium.	2216
Polishing Methods for Correcting Flat Surfaces.	2216
Convex Surfaces.	2216
Concave Surfaces.	2216
Small Concave Areas.	2216
Small Convex Areas.	2216
Irregular Surfaces.	2216
Turned Edges.	2216
Test Glasses.	2216
Polishing Methods for Correcting Spherical Surfaces.	2217
High Convex Surfaces.	2217
High Concave Surfaces.	2217
Low Convex Surfaces.	2217
Low Concave Surfaces.	2217
Raised Areas.	2218
Depressed Areas.	2218
Turned Edges.	2218
Irregular Surfaces.	2218

In general, the surfaces of precision optical elements are finished with such accuracy that their quality cannot be tested satisfactorily by mechanical methods. Many measurements taken with a micrometer over an entire surface, and with much care and skill, could be of less value than indications that can be obtained immediately and with comparative ease when the element is tested optically against a reference surface. While the use of reference surfaces involves the interference phenomena of light, such use can be made without knowledge of these principles. The indications are expressed in terms of bands or rings of light or darkness which serve to measure the shape of a surface and, in general, will apply to either flat or spherical surfaces. A flat reference surface is called an 'optical flat', and a spherical one is called a 'test glass'.

A variety of terms are in use to describe the effects observed when testing with reference surfaces, such as 'fringes', 'bands', 'lines', and 'rings'. 'Fringes'* is more nearly the generic term and is so used in this chapter to include all of the other terms mentioned. For simplicity, the term 'band' will be used in this chapter in connection with testing flat surfaces, and 'rings' with spherical surfaces.

The 'rainbow colors' seen in a thin film of oil on water are the result of light being reflected from both the top and bottom surfaces of the oil film. The same phenomenon is seen when light is reflected from two polished glass surfaces separated by a thin film of air. When light of only one color (monochromatic light) is used, bands of light and darkness are formed instead of rainbow colors.

The bands are visible when the separation between two surfaces is small, *i.e.*, when the surfaces fit closely. For clarity, however, the illustrations that follow show this separation greatly exaggerated. As the distance between the surfaces increases, the width of the bands decreases. Furthermore, the bands will be seen to move when the film of air is made thinner by applying pressure to the elements. Hence this movement serves to indicate a change in the separation between the two surfaces. By observing the direction of the movement and the pattern of the bands, the quality of one of the surfaces can be determined if the quality of the other is known. Usually a reference surface is placed on one side of a disk of glass, quartz, or some similar transparent material, the other side being polished so that it is only approximately flat, and the reference surface being designated by a heavy bevel, or by an arrow, or by some other significant mark etched on the side of the flat.

REFERENCE PIECES

To determine the quality of a surface by the optical method just discussed, it is necessary to have a reference surface of known quality which has a curvature opposite to that of the surface to be tested. That is, to test a convex surface, a concave reference surface is used, and to test concave surface, the reference surface must be convex, and finally, to test a flat surface, the reference surface must be flat.

Cleaning the Surfaces

Before testing a surface, the surfaces of both the element and the reference piece are cleaned with a soft cloth soaked with alcohol and then wiped dry, any remaining lint being removed with a camel's-hair brush. Both surfaces must be free of dust, lint, grease from the hands, or any other foreign matter. A piece of lint between the surfaces may separate them so much that the bands may become too narrow for accurate observation and will prevent the surface from coming into sufficiently intimate contact to be sure of an accurate test.

Viewing the Fringes

The reference surface is placed on the surface to be tested, and the two are brought together gently, with as little sliding motion as possible, in order to avoid damaging the surfaces. Normally, the weight of the reference piece is enough to force out all but a thin layer of air between the surfaces so that bands will appear. The bands are now seen by viewing the reflection of diffused monochromatic light, as shown in Figure 2201, taking care that the angle of observation A is as small as practicable.

*Hardy, A. C. and Perrin, F. H. *The Principles of Optics*, pp. 570–579. New York and London: McGraw-Hill, 1932.

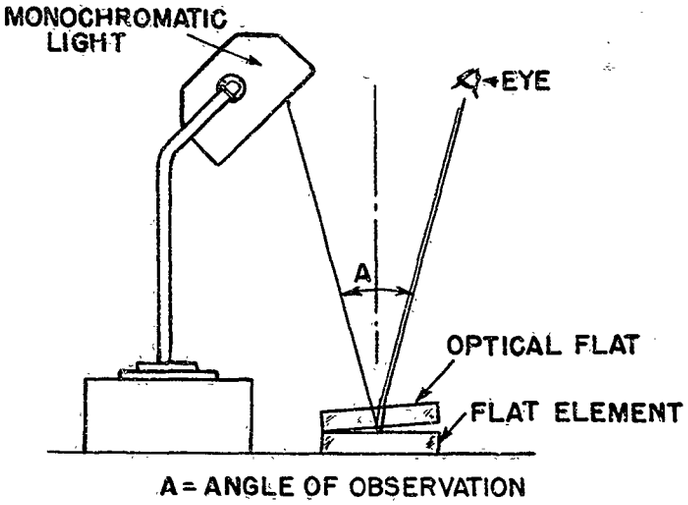

Figure 2201.—Diagram Showing Method of Viewing Fringes Through a Test Piece (In This Case, an Optical Flat).

Fringes as Units of Measure

The relation between the pattern of the bands and the separation between two surfaces (one an optical flat, and one a flat element) is illustrated in Figure 2202. Imagine the equally-spaced planes a, b, c, d, e, and f, all parallel to the optical flat. Suppose further, that the planes remain equally spaced and parallel to the flat, even when it is tilted to any position. Since the optical flat is tilted in the illustration, the planes intersect the surface being tested. If the surface being tested is truly flat, the planes intersect it in a series of equidistant parallel lines which are the center lines of the dark bands in the illustration. Thus, straight bands indicate a wedge of air between two flat surfaces.

Figure 2203 shows how the planes intersect a spherical surface. Here the fringes take the form of rings because the thickness of the layer of air is the same at any point under a fringe, no matter how it is curved. The illustration shows the pattern formed when a convex surface is compared with an optical flat when the thinnest part of the layer of air will be at the center. However, the same pattern will be formed when a concave surface is used, except that then the thickest part of the layer of air would be at the center, and the fringes would show how the layer becomes progressively thinner toward the edges, because the widths of the fringes would be successively wider as viewed from the center to the edge. The greater the number of fringes that are visible, the greater is the change in thickness of the layer of air between the center and the edge and, therefore, the greater is the difference between the curvature of the surface being tested and that of the optical flat. If a flat is placed on an unknown surface and 3 fringes are seen, the surface is said to have a curvature of 3 fringes.

When the departure from flatness is less than a band, the altitude h of a segment of a central band is estimated by determining the proportion which the altitude of the segment bears to the width of a band. This is done by using a straightedge to project both the width of the band and the altitude of a segment, as shown in Figure 2204. The width of a band is the distance from the center of one dark band to the center of an adjacent dark band. The altitude of a segment is the altitude of the arc of the band subtended by a straight line. Thus, in the illustration, the surfaces being tested show a flatness of ¼, ½, and 1 band respectively. It will be noted that when the flatness is 1 band, the altitude of a segment and the width of a band are the same.

Testing Spherical Surfaces

The indicating surfaces that are associated with spherical reference pieces may be considered to be portions of concentric spheres (see Figure 2205), the surfaces of which are separated by the same small distances as were the planes with the optical flat as shown in Figure 2202. When the test glass is placed on another spherical surface (see Figure 2205), these concentric spheres will intersect the surface being tested in a series of concentric circles which will be the centers of the dark rings in the illustration. The center of the dark ring pattern is either the thickest or the thinnest part of the air layer separating the two surfaces. The greater the number of rings seen, the greater is the difference in curvature; therefore, if 3 rings are seen, the surface being

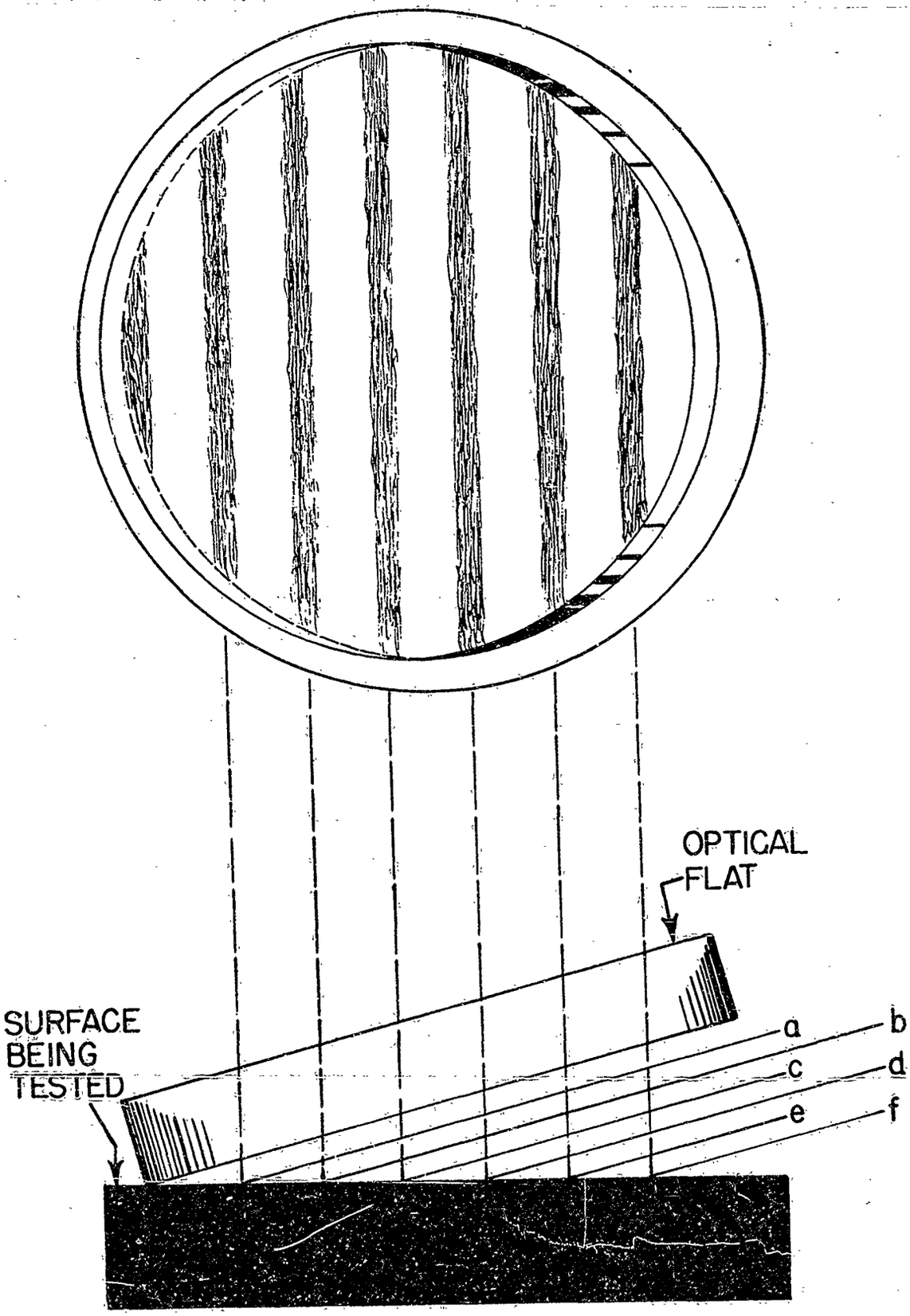

Figure 2202.—Diagram Showing Relation Between Bands and the Separation Between an Optical Flat and a Flat Surface.

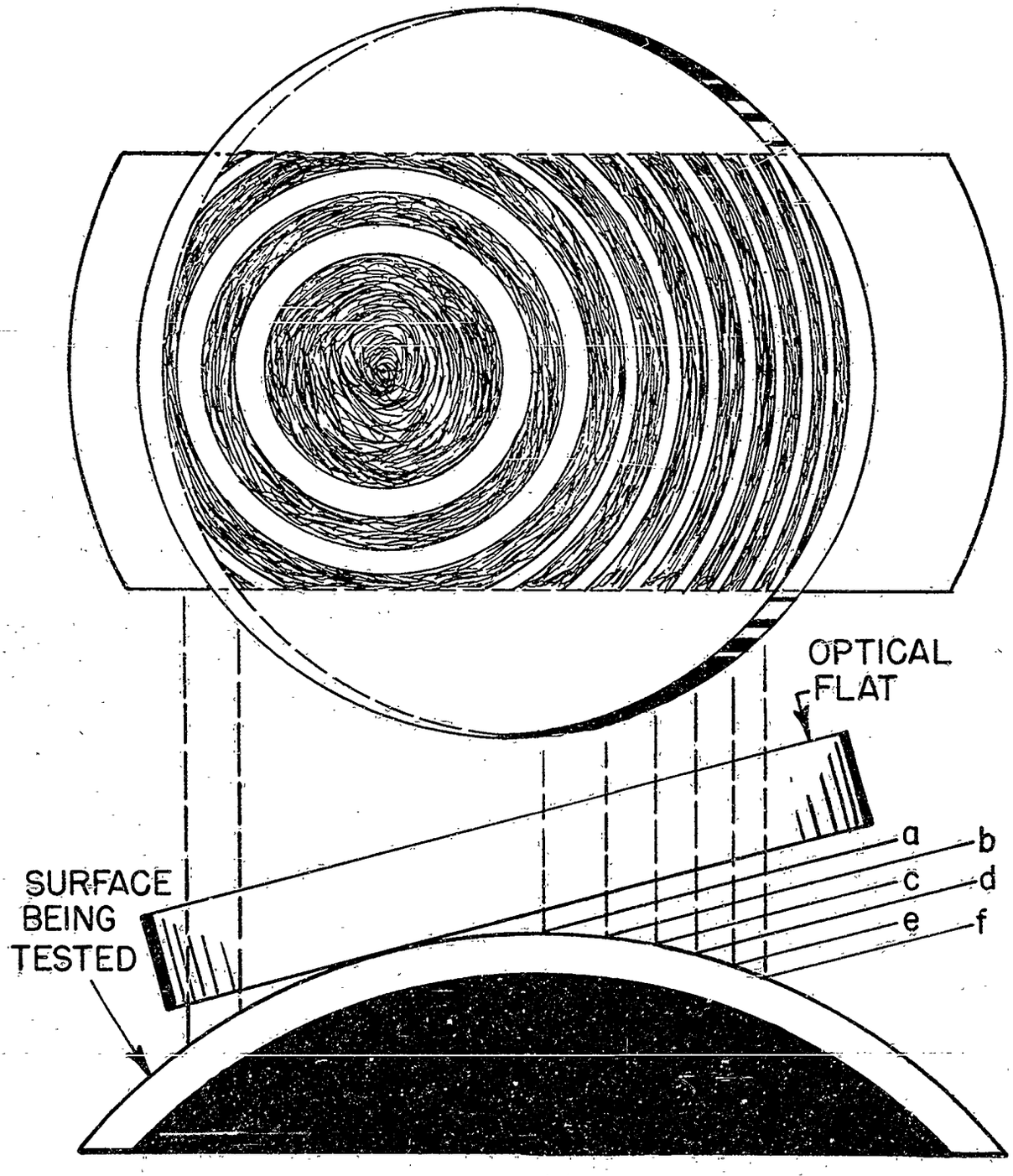

Figure 2203.—Diagram Showing Relation Between Bands and the Separation Between an Optical Flat and a Spherical Surface.

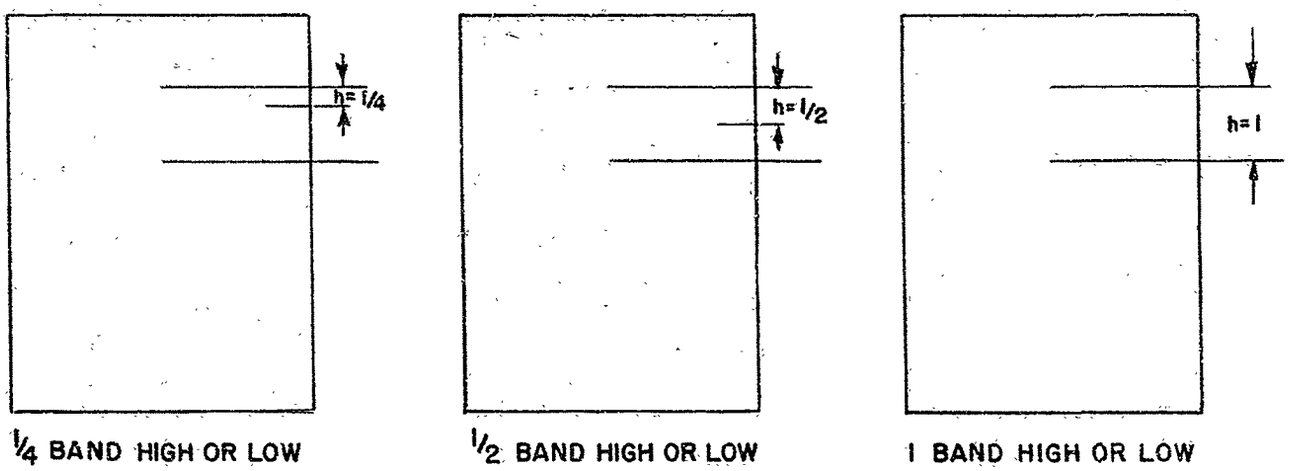

Figure 2204.—Diagram Showing Method of Determining Degree of Flatness by Use of an Optical Flat. This Diagram also Shows the Method of Determining the Altitude (h) of a Segment when Using an Optical Flat.

tested is considered as having a curvature of 3 rings with respect to the curvature of the test glass.

If a surface is uniformly spherical over its entire area, the rings will be round and equal in number, no matter where the reference surface is applied. It is important to test the surface at more than one place, however, since otherwise an erroneous reading may result. For example, let it be assumed that a spherical surface has one area, A, with a definite radius of curvature which is different from areas B and C. If the test glass is located centrally over area A, round rings will be observed, but if the test glass is placed at a nearby location so that it centers between A and B, or A and C, the rings will lose their roundness and thereby reveal the unevenness of curvature of the surface being tested. (For a further discussion of testing of spherical surfaces see under "Testing the Surfaces of Optical Elements" later in this chapter.)

Determination of whether the center of a pattern of rings indicates that a thick or a thin layer of air separates the two surfaces, can be made by applying pressure at that point. Generally, rings move towards thick air layers and away from thin layers, *i.e.*, if pressure is applied at an area where the layer of air is thick, the rings will move towards the point of pressure. Conversely, if pressure is applied where the layer of air is thin, the rings will move away from the point of pressure. This test must be used carefully because of the danger of injuring the surfaces. Also, if the angle of observation, A in Figure 2201, is increased, *i.e.*, if the observer's head is lowered, the rings will move toward the center of the pattern and fewer will be seen if the thicker air layer is at the centers of the surfaces. Conversely, the rings will move away from the center and more rings will be seen if the thicker air layer is at the edge of the surfaces.

When the two surfaces are so nearly of the same curvature that only a few rings can be seen, the thinnest part of the air layer is not readily seen by changing the angle of observation. However, a surface whose radius of curvature is either too short (high) or too long (low) can be recognized by the direction in which the rings move while the reference surface is being applied. As the reference piece settles, the curvature of the rings and the direction of their motion may be observed.

If the rings move away from their center, the radius of curvature is too short, (*i.e.*, high surface) in the case of convex elements, see Figure 2206(a), too long (*i.e.*, low surface) in the case of concave elements, as shown at (d). If the rings move toward their center, the radius of curvature is too short (*i.e.*, high surface) in the case of concave elements, as shown at (c), or too long (*i.e.*, low surface) in the case of convex elements, as shown at (b). (As

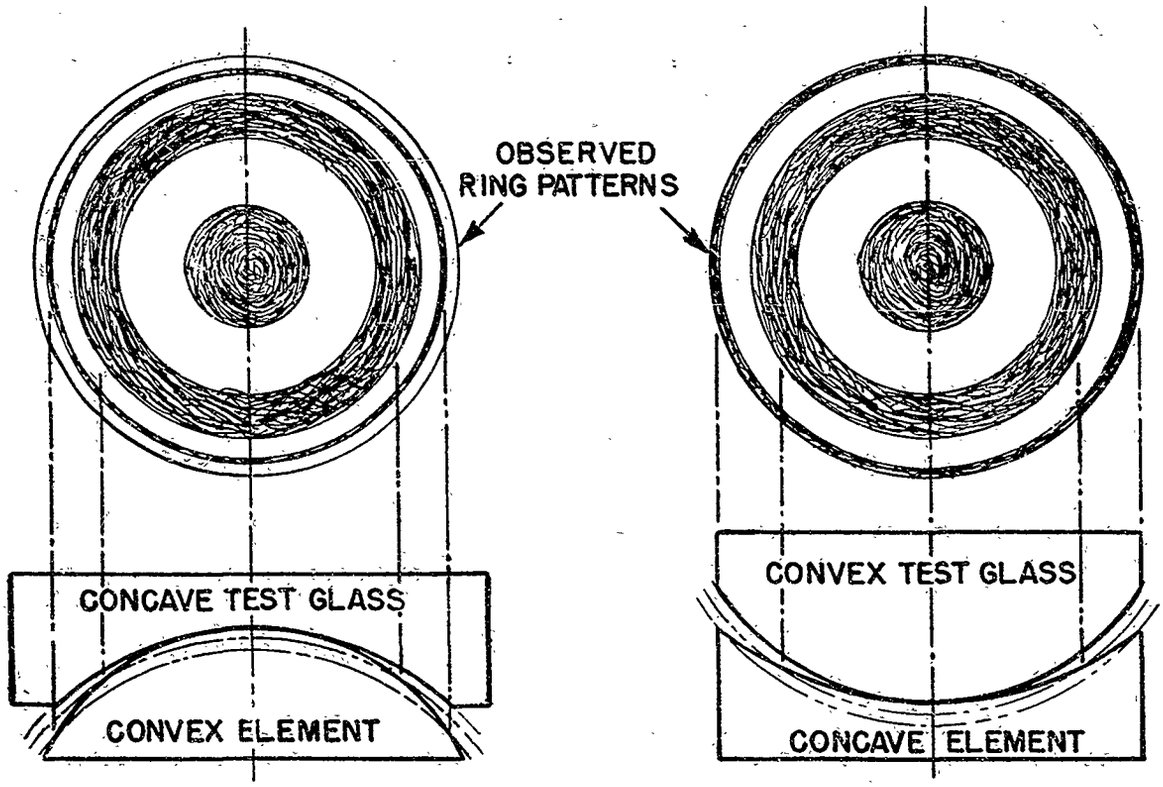

Figure 2205.—Diagram Showing Examples of Ring Patterns Observed when Testing Spherical Surfaces.

explained in Chapter 12, the term 'high' indicates that the radius of curvature is too short, and the term 'low' that the radius of curvature is too long. See first column of Figure 1212, *Trouble-shooting Table for Radius Polishing.*)

Sources of Error

The curvature or flatness of a surface is indicated by the pattern of bands or rings that is formed against a reference surface. The methods just discussed for evaluating the curvature or flatness of a surface are based on the assumption that the reference surface is perfect. However, any inaccuracy in a reference surface will cause a corresponding inaccuracy in its indications. For example, if an optical flat is within ¼ band of true flatness, there is an error of ¼ band in all of its indications.

Reference pieces are made of transparent materials which are subject to expansion or contraction with changes in temperature. A non-uniform temperature in a reference piece distorts the surface and causes errors in its indications. In fact, the heat of the hand is often enough to cause a noticeable distortion when the reference piece is made of crown glass. Crystal quartz, fused quartz, and 'pyrex' have rather low thermal coefficients and are not affected so much by a non-uniform temperature as, for example, crown or plate glass. The main function of a reference surface is to determine the curvature and uniformity of the surface being tested. During the polishing operation, an element or a block of elements may be warmed considerably by the polishing action, and it is seldom that this change in temperature will be uniform throughout the block. In any event, the surface being tested will be warmer than the reference surface. For this reason, any observations will include an error whose magnitude can be estimated only from past experience. To eliminate this error, it is necessary to allow the elements that are to be tested to stand until their temperature is uniform throughout. The time required for this depends on the size and type of block,

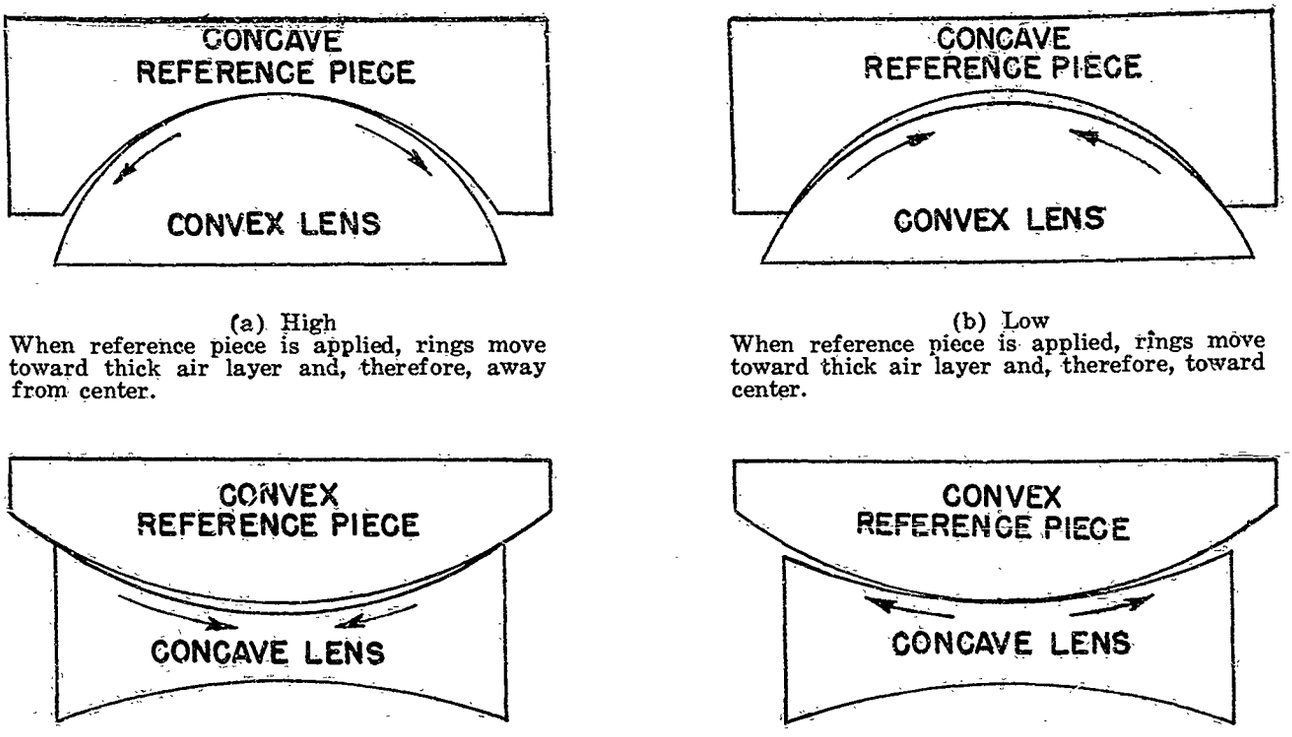

(a) High
When reference piece is applied, rings move toward thick air layer and, therefore, away from center.

(b) Low
When reference piece is applied, rings move toward thick air layer and, therefore, toward center.

(c) High
When reference piece is applied, rings move toward thick air layer and, therefore, toward center.

(d) Low
When reference piece is applied, rings move toward thick air layer and, therefore, away from center.

Figure 2206.—Diagram Showing High and Low Conditions of Convex and Concave Surfaces, with Arrows Indicating Direction of Ring Movement as Reference Piece is Applied.

its temperature, and the desired accuracy of the finished surface. For very accurate work, larger blocks must be allowed to stand for several hours, or even over night, to insure that their temperature is sufficiently uniform. The angle of observation, A in Figure 2201, must be kept as small as is practicable to obtain correct readings. The curvature of the bands or the number of rings is decreased by an increase in the angle of observation, and this effect is increased still more as the difference in curvature between the surface being tested and the reference piece increases.

The thickness of a test glass is usually greater than that of the element being tested, because it is important that it does not spring when it is being used. It is common, therefore, for the reference piece to be heavier than the element being tested. For this reason, the surface of a small thin piece may be distorted by the weight of the reference piece itself. To reduce this source of error, it is important that such a thin piece be seated firmly in order to obtain a correct indication, before applying the reference piece.

Size of Reference Pieces

Diameter.—If a uniformly-curved surface on an element that is 6 inches in diameter departs from the desired curve, or flatness, by 9 rings or bands, these 9 rings or bands will also be observed when the element is tested with a reference piece that is 6 inches in diameter. If it is tested with a piece that is 3 inches in diameter, 4 rings or bands will be seen and, if the reference piece is 2 inches in diameter, only 1 ring or band will be visible. In other words, on a regular surface, the departure from

planeness when measured in the number of rings or bands, varies inversely as the square of the diameter of the test plate.

Optical Flats.—Flats should be made with a diameter equal to, or larger than, the diameter of the surface to be tested. When used to test a number of small pieces being processed at one time on a block, a flat large enough to cover several, or even all of them at once, will give indications of greater accuracy.

In general, flats of from 4 to 6 inches in diameter give satisfactory results and, at the same time, are not too bulky and heavy to handle.

Test Glasses.—The size of a test glass is limited by its radius of curvature. However, as in the case of optical flats, it is advisable that its diameter be equal to or greater than that of the lens to be tested.

Thickness.—The thickness of the thinnest portion of a reference piece should be no less than 1/6 of its diameter for the large pieces and no less than 1/4 of its diameter for the smaller sizes, but since the thickness is needed only to prevent springing, its tolerance is not important.

TESTING THE SURFACES OF OPTICAL ELEMENTS

Optical Flats

It is customary to make flat surfaces so accurate that only a few bands are available for interpretation. In general, the flatness of a surface is measured by the straightness of the bands (see Figure 2204). There is one exception to this rule. When a surface is cylindrical and the line of contact between the optical flat and the surface is parallel to the axis of the cylinder, the bands will be straight. However, the fact that the surface is cylindrical can be recognized in two ways; first, the bands, though straight, will not be equally spaced, nor will they be of uniform width; and, second, if the optical flat is tilted so that the line of contact is not parallel to the axis of the cylinder, the bands will be curved as shown in Figure 2207. In making a careful test for flatness, therefore, the optical flat should be placed on the surface in at least two positions, such that the bands that are observed from one position will be perpendicular to those observed from the other. When the bands that are observed from both of these positions are straight, of uniform width, and equally spaced, the surface that is being tested may be considered to be flat.

Test Glasses

Spherical surfaces, in general, show a number of rings when finished. The number of rings seen indicates the difference in curvature between the surface being tested and the reference surface. A surface is spherical over its entire area when the rings are all round. The departure of certain areas or zones from a true spherical surface is indicated by rings which are not round. It is possible under one special condition that nicely-round rings may appear, although the surface being tested is not truly spherical. This is the case where a raised or depressed area is exactly centered. The condition here is recognized by applying the test glass so that the ring pattern is not centered. The symmetry of the curved bands is disturbed over the area in question. It is important, therefore, when testing spherical surfaces, that the test glass be applied in more than one position.

TESTING THE ACCURACY OF REFERENCE SURFACES

Optical Flats

Three-plate Method.—The principle that is usually used to determine the accuracy of an optical flat when no flat of known accuracy is available for comparison, is to observe the relative accuracy of three flat surfaces by comparing each with the other two. This method assumes that the surfaces are regular and slightly spherical, rather than irregular or slightly cylindrical. By observing the bands that are produced when the surfaces are compared in this way, the accuracy of each may be determined accurately. If each of the three combinations show straight bands, then all three surfaces are flat. However, if they are not, the flatness of each surface can be determined algebraically from the number of bands, positive or negative, that each combination departs from coincidence.

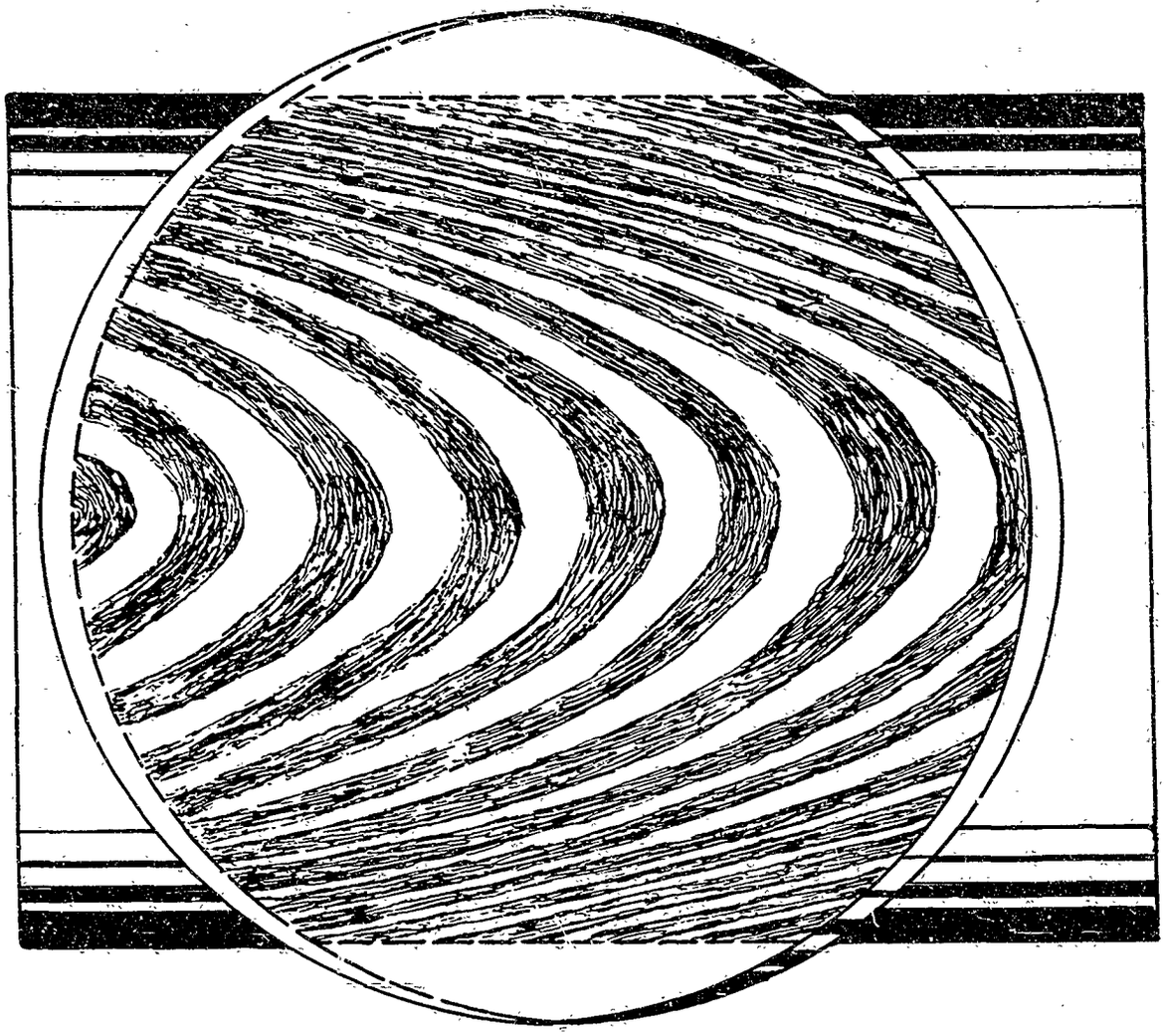

Figure 2207.—Diagram Showing Relation Between Bands and the Separation Between an Optical Flat and a Cylindrical Surface.

For an example, let us assume three surfaces, A, B, and C, with surfaces A and B showing 3 bands positive, B and C showing 2 bands negative, and A and C showing 1 band positive.

Expressing these relationships in the form of algebraic equations:

$$A + B = +3$$
$$B + C = -2$$
$$A + C = +1$$

Then, by solving these three equations simultaneously, we find that:

$$A = +3$$
$$B = 0$$
$$C = -2$$

which is to say:

A is 3 bands positive, or convex,

B is plane, and

C is 2 bands negative, or concave.

Test Glasses

Measuring the Radius of Curvature.—In testing spherical surfaces, both the radius of curvature and the surface accuracy must be checked. While the radius of curvature can be measured either mechanically or optically, for high precision it is always measured optically.

Mechanical Methods. *(a)* Using a Ring Spherometer.—This is a device used to measure the segmental altitude of a spherical surface that is either convex or concave. Knowing

the segmental altitude, the radius of curvature can be computed from the formula: [see formula (6) in Chapter 7]:

$$R = \frac{r^2 + h^2}{2h} \qquad (15)$$

where (see Figure 2208)

R = the radius of curvature

r = the radius of the ring of the spherometer

h = the segmental altitude as determined by the spherometer

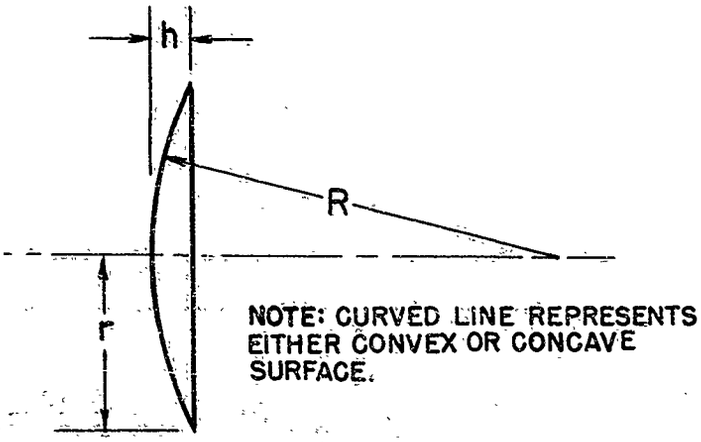

Figure 2208.—Diagram Showing Method of Determining the Altitude of a Segment when Using a Ring Spherometer.

In the ring spherometer, the ring is used to locate the plane from which the segmental altitude is measured. In some spherometers, however, three equidistant points are substituted for the ring. In either case, a dial gage or a micrometer screw can be used to measure the segmental altitude, the zero reading being obtained by setting the instrument on an optical flat.

(b) Using a Single-contact Slide Spherometer.—In the base of this instrument (see Figure 2209) is a sliding stage whose position is controlled by a micrometer screw. A lens carriage, mounted on a cross slide and resting on the sliding stage is moved perpendicularly to the sliding stage by a second screw, which, however, need not be graduated. This is because it is used merely to supplement the sliding stage in bringing the center, or axis, of the lens face into line with the vertical axis of the contact member of the instrument. The center contact member is used to measure the segmental altitude, and is equipped with a scale so that its position can be read by a microscope. In addition, its contact surface must be truly spherical and of known radius.

In using the instrument, the lens is mounted on the lens carriage and then adjusted by means of the two screws, until the center contact member is in its highest position while still in contact with the lens, if a convex surface is being measured, (and in the lowest position if a concave surface is being tested). At this point, the micrometer screw that controls the sliding stage and the height of the center contact member are both read and recorded. Next, the lens carriage is moved through any convenient distance by turning the micrometer screw that controls the sliding stage, and a new reading is obtained for the height of the center contact member. From this data, the radius of curvature of the surface being measured can be obtained from the following formula:

$$R = \frac{r^2}{2} + \frac{h}{2} \pm r_b \qquad (16)$$

where

R = the radius of curvature

r = the distance the sliding stage has been moved

h = the segmental altitude as determined from the movement of the center contact member

r_b = the radius of the spherical contact surface of the center contact member

Note: The positive sign is used when convex surfaces are being measured, and the negative sign when concave surfaces are being measured.

Optical Methods.—Various optical methods for checking the radius of curvature on lenses, have been devised. One method suitable for either concave or convex lenses,* employs a 'lens bench' (or 'optical bench' as it is also called), the use of which is described in Chapter 24. Three other methods, each having a limited application, are described below.

*Johnson, B. K. *Practical Optics for the Laboratory and Work Shop.* pp. 32–33. London: Benn Bros., 1922.

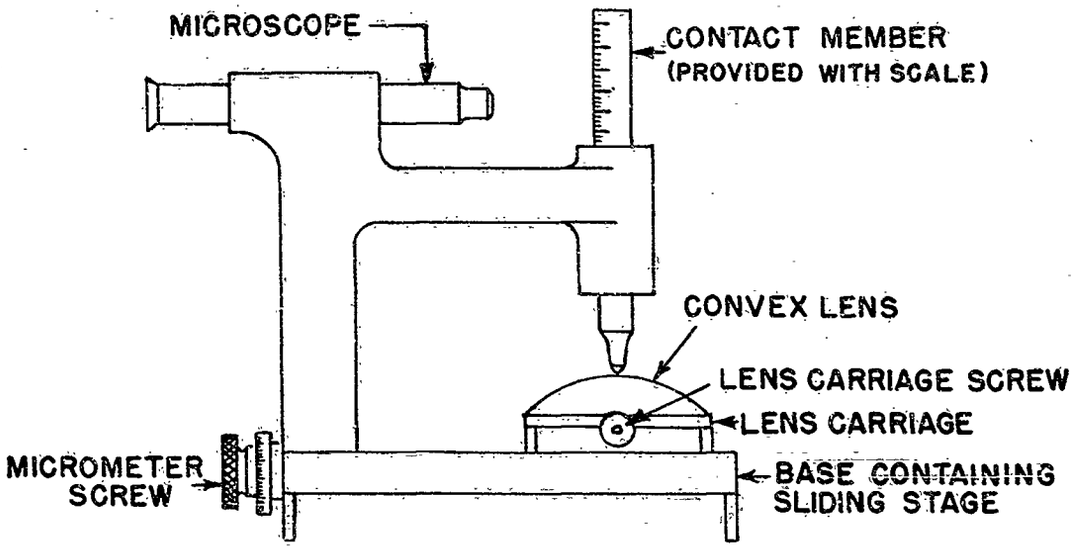

Figure 2209.—Diagram of Single-contact Slide Spherometer.

(a) Microscopic Method for Concave Elements.—An object placed at the center of curvature of a concave surface will form an image by reflected light at the same place. If a microscope is placed so that its axis coincides with the axis of a concave surface, and one side of the cross wire is properly illuminated, an image of the cross wires will be formed in the focal plane of the microscope objective. If this image is placed at the center of curvature of the concave surface, it will be reflected back and form an image in the same position. This image will be seen on the cross wires. Next, the microscope is moved along its axis so that the face of the concave surface is in focus, *i.e.*, so that the image of the surface is formed on the focal plane of the objective. The amount of this movement is equal to the radius of curvature.

(b) Foucault Method for Concave Elements.—A concave spherical surface can be tested very accurately by this method. By placing a small illuminated pinhole (0.002 to 0.010 inch in diameter) near the center of curvature, the diverging cone of rays will be reflected back to the source, forming an image of the pinhole. If a knife edge is placed so that it cuts across the image of this pinhole, and the eye—placed near it—is focused on the concave surface, the surface will darken uniformly if it is truly spherical. Small irregularities will appear as shadows or particles of light. Surface deviations of less than 1/8 ring (0.000002 inch) can be detected in this manner. This test becomes more sensitive as the length of the radius of curvature of the surface to be tested increases. A condition is reached, however, where the illumination becomes the limiting factor.

(c) Interference Method for Flat or Convex Elements.—The radius of curvature of a convex surface can be determined by comparing it with a concave surface of the same desired radius by observing the interference rings. If the rings remain regular and circular when the two surfaces are displaced, *i.e.*, when one surface is moved on the other laterally, not radially, each of the two surfaces have the same radius.

Collimated light should be used when a high degree of accuracy is desired, because accurate observations cannot be obtained when large surfaces that are in contact are viewed at an angle, or even when they are viewed perpendicularly from a short distance. A simple optical system that is effective for viewing flats is shown in Figure 2210(a). The plano-convex lens is used to insure that the light rays approach and leave the surface under observation perpendicularly.

When a spherical surface is to be tested, any danger of scratching the surface by bringing it into optical contact with the test glass may be avoided by placing three separators between the two surfaces. These separators

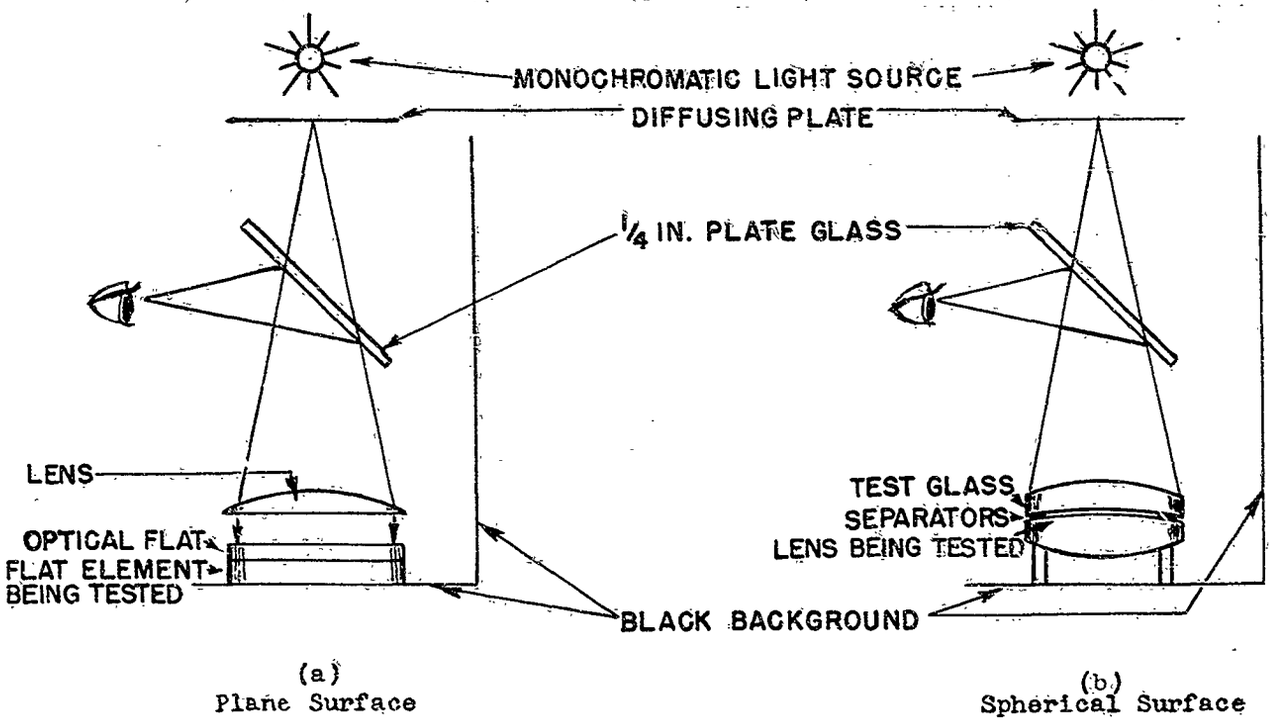

Figure 2210.—Diagram Illustrating Interference Method of Checking Surfaces.

must be of uniform thickness (tin foil is very suitable), and should be spaced equally around the edges, see Figure 2210(b). The upper surface of the test glass is ground and polished with the proper radius of curvature so that it will collimate the light passing through it and insure that the rays that approach and leave the surfaces being observed will be normal to them. This makes it unnecessary to use the plano-convex lens shown in Figure 2210(a).

MANUFACTURING REFERENCE PIECES

The manufacture of precision optical flats and test glasses is generally delegated to craftsmen of long experience. These men develop individual techniques and methods for correcting various errors and for meeting the many conditions that arise during the polishing of this class of precision elements. The work is of such a high degree of precision that many external conditions must be considered which do not have an appreciable effect on elements that are to be used in ordinary optical instruments. Some of these conditions are the temperature and humidity of the atmosphere in the work room, the temperature of the hands of the operator, the heat of friction that is developed between the work and the tool, the pressure that is exerted by the element on the tool, and the relative speed between them, as well as the variations in the glass itself, and the changing condition of the polishing tool. With so many variables to consider, it would be impracticable to specify the exact techniques to use under all circumstances. Furthermore, experience has shown that no two craftsmen would be able to use them with equal effectiveness. It is necessary, therefore, for each workman to accumulate sufficient practice so that he can determine both the cause of a defect and the best method to use for correcting it.

The procedure for fine grinding optical flats and test glasses is the same as for ordinary flat work and lenses, see Chapters 11 and 12. However, it may vary somewhat when the polishing is done manually. This discussion is confined to processing reference pieces singly, *i.e.*, polishing optical flats on a pedestal (Figure 2211), and polishing test glasses on a spindle. Some craftsmen prefer to process reference pieces entirely by machine. When this is done it is usually necessary to vary the ordinary procedure of blocking by holding them in

a metal chuck, or with wax pellets on a metal plate, as described for windows in Chapter 16. In any event, they must be blocked in such a way that any possibility of 'springing' or becoming unstable will be reduced to a minimum. Although hand processing is usually necessary to obtain the desired accuracy, all but the final work may be done by machine, in order to reduce the amount of manual labor. The principles of machine polishing flatwork (Chapter 11) and lenses (Chapter 12) apply to reference pieces and, therefore, only hand polishing is discussed in detail in this section. It is well recognized that the making of reference surfaces should not be hurried, as haste is very likely to affect the accuracy and quality of the finished work.

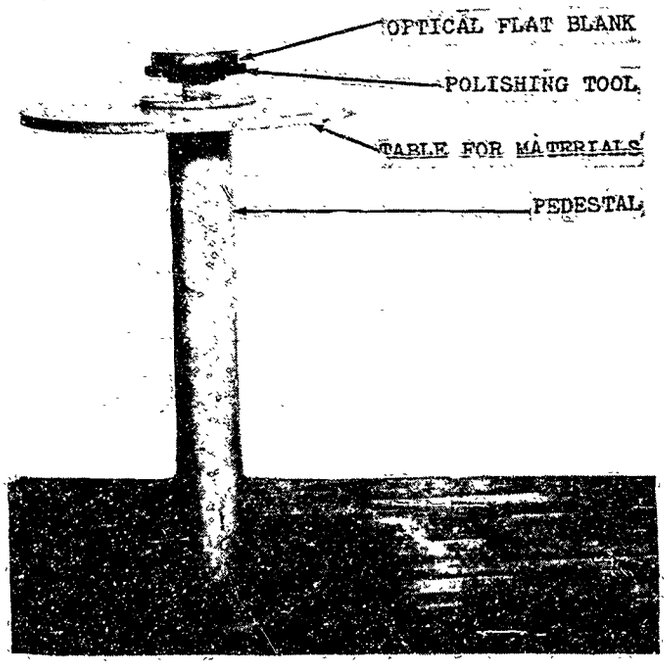

Figure 2211.—Equipment for Polishing Optical Flats.

After a short period of polishing (approximately 15 minutes), the condition of the surface is determined by one of the methods mentioned above. As polishing progresses, the closer the approach to the final accuracy of surface, the more frequently the test is made. Very little pressure is needed to obtain the final accuracy.

Optical Flats

The Pedestal.—The pedestal shown in Figure 2211 consists of a rigid upright post on which a polishing tool can be mounted securely. The circular table shown below the surface of the tool is used for holding the necessary polishing materials.

Normal Polishing Stroke.—At the stage of polishing when all gray has disappeared, it is desirable to have a regular surface which is slightly convex, since this permits the use of normal correction procedure. Such a surface is obtained by using a normal polishing stroke.

A normal polishing stroke is to move the flat across the center of the tool. The length of a normal stroke is about one third of the diameter of the flat, and should carry the flat equal distances beyond the far and near edge of the tool. After three or four strokes, the craftsman rotates the flat about 15° in one direction, and then moves about 15° around the pedestal in the opposite direction from that in which the flat is rotated. This rotation of the flat allows a more uniform wearing of the surface, whereas the movement of the craftsman about the pedestal aids in keeping the tool in shape. The rotation of the flat and the movement of the craftsman about the pedestal are necessary when correcting various types of surfaces.

Polishing Tools.—To polish a flat 6 inches or greater in diameter, a tool slightly greater than the flat to be polished is prepared, having channels or grooves, about 1/8-inch deep and 1 inch apart, which divide the surface into 1-inch squares. For a flat less than 6 inches in diameter, a tool in which a net is embedded is used. The net, knitted from linen and cotton, and with a 1/8-inch mesh, is spread tightly over the surface of the tool, and a warm cast-iron plano-tool is used to iron the net into the tool surface. No channels or grooves are necessary when a net is used.

Satisfactory results have been obtained with a tool composed of coal tar (roofing pitch) and rosin. When the temperature of the polishing room is about 73°F., a mixture of three parts of coal tar and one part of rosin has given good results. Lower temperatures may make

it necessary to increase the ratio to four to one, or even greater. The tool can be hardened by adding more rosin to the mixture. To reduce the possibility of any foreign material being included in the the tool, the coal tar and rosin are boiled together and strained through three or four thicknesses of cheesecloth.

Temperature Equilibrium. — It should be noted that the expansion of the reference piece, from the heat of the hands, affects the accuracy of the surface. Therefore, after a polishing operation it is necessary that the optical flat be allowed to cool to room temperature before checking the surface. The pattern made at room temperature shows the actual condition of the surface when the flat has a uniform temperature.

Polishing Methods for Correcting Flat Surfaces. *Convex Surfaces.* — If the surface is tested and found convex, the optical flat is held with hands or fingers placed at or near its outer edge, and with its surface on the polishing tool. The heat from the hand causes the glass to expand slightly, and in such a way as to make the convexity more pronounced. As a result when the glass is rubbed on the tool, the central portion receives the greater wear. To correct a convex surface, the stroke is lengthened so that the outer portion of the surface, which needs no wear, will be beyond the edge of the tool during a part of each stroke, while the convex portion will be in contact with the tool continuously.

Concave Surfaces.—To correct a concave surface, the finger tips are placed over the center of the piece, since then the heat from the hand increases the concavity of the surface. The effect of this is that the outer portion of the surface receives the greater wear during polishing. In addition, the length of the stroke is reduced to allow the outer portion of the surface that is being corrected to receive wear during a larger part of the stroke. Another way to correct a concave surface is to remove the pitch from the central portion of the polishing tool so as to reduce the polishing action on the center of the surface. When this is done, it is customary to use another polishing tool so that the original may be kept for final correction. A concave surface should be overcorrected, *i.e.*, until it is 2 or 3 bands convex. It is then treated as a convex surface and corrected to flatness.

Small Concave Areas.—The procedure for correcting a depressed area is similar to that used for correcting a concave surface. The center of the polishing tool is relieved and the flat is moved so that the depressed area passes over this portion of the tool. The flat is held by the fingers above the depressed area so that the heat from the fingers will raise the area slightly, and thus insure that greater wear takes place on the portion of the surface that surrounds the area that it is desired to correct.

Small Convex Areas.—A surface having a hump, *i.e.*, a small convex area, is corrected by moving the convex area over the outer portion of the tool, and working the flat backward and forward with straight, even strokes. In this way the humped area is being worn constantly, while the portion that extends beyond the tool is not. When the hump has been removed, it is probable that the entire surface will need further correction by passing it over the center of the tool.

Irregular Surfaces.—An irregular surface should be polished until it is 1 or 2 bands convex over its entire area. When this has been done, the procedure for correcting a convex surface is followed.

Turned Edges.—Should the pattern show that the surface has a bevel, *i.e.*, a turned edge, the tool should be trimmed to the same diameter as the flat, keeping the side wall vertical, and taking care that it makes a sharp 90° angle with the level polishing surface. Following is a stroke that can be used for correcting a turned edge: Starting with the flat placed on the tool, and its far edge coinciding with the far edge of the tool, the flat is moved across the center of the lap toward the operator until the near edge extends the distance of the turned edge or bevel beyond the near edge of the lap. Consequently, the length of the stroke is always approximately equal to the width of the turned edge.

Test Glasses

No complicated machinery is needed to make test glasses. They can be made on a regular

polishing machine, a horizontal spindle, such as a modified bench lathe, a vertical spindle, or a pedestal. Some craftsmen, when making a test glass of long radius and comparatively small diameter, *e.g.*, a 100-inch radius and 3½-inch diameter, prefer to do the initial processing on a machine with mechanical oscillation, and then make the final correction by hand. When polishing by machine, the rules for placing either the lens or the polishing tool on top are the same as discussed in Chapter 12. When polishing by hand, however, it is customary to mount the tool on the spindle.

Spindle speeds used for making test glasses vary from a slow speed between 125 and 150 rpm, to a high speed of from 175 to 225 rpm, with an average speed of about 160 rpm. Although it is not necessary to vary the speed, it is usual to use a high speed to give the surface a slight polish or 'shine', while a slow speed is used when the surface is approaching the desired curvature.

The pitch used to make the polishing tool need be no different from that used for ordinary polishing, see Chapter 12, the hardness depending on the working habit of the craftsman and upon the area of the surface being polished. If considerable pressure is applied by hand during the polishing, a hard pitch gives better results, while a softer pitch may be used with less pressure.

The first surface of the test glass to be polished is the flat surface, and the work may be done with a felt polishing tool. While test glasses having diameters ranging from approximately ¾ inch to 2½ inches are usually held directly by the fingers, smaller ones are handled more readily when they are attached to a wooden handle with pitch or sealing wax. The nature of machine polishing action distributes the heat evenly throughout the glass, and thus reduces the possibility of any lack of a uniform temperature of the test glass affecting the polishing action.

Grooves in the tool are not necessary, but it is often desirable to have a small hole cut in the pitch at the center. If grooves are preferred, they are cut so shallow and narrow that they could be considered scratches. These narrow grooves are made in the pitch surface to prevent too great a flow of pitch during the polishing action.

When no master is available, and the progress of the polishing must be observed on a lens bench, it is necessary to make a pair of test glasses, consisting of one convex and one concave glass, both of which should be ground as close to the required radius as possible. Next, the concave element is given a 'shine', and tested on the lens bench. If necessary, the tools are corrected, and the surface re-ground and polished. This procedure is continued until the surface is of the desired radius of curvature. Then the concave element is used as a reference surface in making the convex element. When the convex element has been polished to the correct radius of curvature, the concave and convex surfaces are compared with each other for regularity of surface and, if necessary, are corrected by further polishing.

Polishing Methods for Correcting Spherical Surfaces. *High Convex Surfaces.*—The greater portion of a high convex surface, see Figure 2206(a), can be removed by oscillating the highest portion of it around and on the outer portion of the tool, or by relieving the outer portion of the tool. When the surface is fairly close to the desired radius of curvature, the correction can be completed by increasing the length of the stroke. In each case, the high portion is being worn throughout the stroke, while the portion needing lesser correction is removed from contact with the tool surface at times, or is under less pressure.

High Concave Surfaces.—To correct a high concave surface, see Figure 2206(c), greater wearing of the outer portion of the surface is necessary. Therefore, the stroke is shortened and the center of the surface is passed across the center of the tool. If necessary, the central portion of the polishing tool is relieved so as further to lessen the polishing action there.

Low Convex Surfaces.—Low convex surfaces, see Figure 2206(b), are corrected in the same manner as high concave surfaces.

Low Concave Surfaces.—Low concave surfaces, see Figure 2206(d), are corrected in the same manner as high convex surfaces.

Raised Areas.—If the surface should have a raised area or hump at its center, it is necessary for that portion to receive the greatest wear during correction. This can be accomplished by trimming the tool until it is slightly larger in diameter than the test glass, by relieving the tool near the edge, and by allowing the hole at the center of the tool to fill in until the hump is removed. Satisfactory results have also been obtained by using longer and faster strokes. In the final stage only three or four strokes should be made between tests.

Depressed Areas.—If the surface is regular except for a depressed area or hole, it may be corrected with a normal or medium stroke. Such a stroke should cause a uniform wearing of the surrounding surface, and should be continued until the depth of the depressed area has been reached. If necessary, the hole at the center of the tool is enlarged and the tool is relieved midway between the center and edge.

Turned Edges.—A turned or beveled surface can be corrected after polishing the surface about 3 or 4 rings low on convex elements, or about 3 or 4 rings high on concave elements (see Figure 2206). This can be done by trimming the polishing tool until it is only slightly larger in diameter than the test glass. In addition, the tool may be relieved in order that the pitch will flow uniformly. If a convex element is being corrected, the procedure then is the same as that used for correcting a low convex surface, but it should be kept low until the bevel has been completely removed. If a concave element is being corrected, the procedure is the same as that used for correcting a high concave surface, but it should be kept high until the bevel has been completely removed. It should be remembered that any attempt to obtain the desired curvature too rapidly will cause the bevel to return. After polishing the surface, the most wear must be on the outer portion. If the surface has been polished sufficiently (low in the case of convex elements, or high in the case of concave elements), the wear needed on the outer portion should remove the bevel.

Irregular Surfaces.—An irregular surface may be corrected by using a normal stroke and relieving of the tool so that the pitch will flow uniformly, and thus keep the proper curvature on the tool surface.

CHAPTER 23

CLEANING OPTICAL ELEMENTS

	Page No.
Mechanical Methods.	2302
Combination of Mechanical with Other Methods.	2302
Thermal Methods.	2305
Heating.	2305
Chilling.	2305
Detergent Methods.	2305
Neutral.	2305
Alkaline.	2306
Alkaline Materials.	2306
Alkali Shellac-removal System.	2306
Test of Alkali Solutions.	2306
Solvent Methods.	2306
Organic Solvents.	2308
Cold Soaking.	2308
Solvents Used.	2308
Precautions when Using Solvents.	2308
Hot Liquid and/or Hot Vapor.	2308
Two-dip Degreaser.	2308
(a) Cleaning with a Degreaser.	2310
(b) Cleaning the Degreaser.	2310
Slush-type Degreaser.	2310
Trichlorethylene.	2310
Other Solvents.	2312
Inorganic Solvents.	2313
Acids.	2313
Alkalis.	2313
Cleaning Methods Used by Various Manufacturers.	2313
Minneapolis–Honeywell Regulator Company.	2313
Zenith Optical Company.	2313

It is necessary to clean an optical element during almost every operation in its manufacture. The materials to be removed depend upon the element itself, the stage that has been reached in its manufacture, and the particular conditions in the shop in which it is being processed. These materials are usually solids or plastics and may be classified as adhesives, protective coatings, and miscellaneous materials such as fingerprints, dust, lint, stains, dirt, plaster, and rouge.

Common methods of cleaning optical elements are discussed in this chapter. However, because of the particular relation of proper cleaning to the adhesion of evaporated coatings, certain special techniques which are used before the application of these coatings are discussed in Chapter 19, *Evaporated Film Coatings*. *Cementing Lenses*, Chapter 20, also contains special information on the decementing of cemented optical elements, a necessary preliminary step that results in the removal of some material from such elements before final cleaning can be accomplished.

In Figure 2301 a tabular arrangement is used to indicate the type of method, treatment, and agent which may be suitable for the cleaning of specific materials from rough or polished surfaces. While this table is not sufficiently detailed to supplant the text, it should prove valuable as a reference and guide in interpreting the more detailed information supplied in the text.

Regardless of what cleaning methods are used, care must be taken not to damage the optical elements. Polished surfaces will scratch easily when rubbed, if dirt or dust is present. Corners of elements chip very easily when dropped, or when knocked against one another.

MECHANICAL METHODS

While severe mechanical action is ordinarily too rough, mild mechanical action can very often be employed to supplement other methods of cleaning. Rouge can be removed from ground surfaces or bevels, by rubbing with pumice stone or other abrasives, but this method is not recommended for polished surfaces because of the possibility of injuring them.

Polished surfaces can be rubbed with very finely-ground materials, most of which are softer than the glass, and usually are moistened with water. Some such materials are magnesium carbonate, magnesium oxide, calcium carbonate, silica, and titanium dioxide. Another of these materials, which is effective when rubbed on flat surfaces which are to be contacted, is a very finely-divided silica, known as 'Super Floss'. Before use, Super Floss is moistened with chemically-pure ether.

Oily material which may be clinging to a surface may be removed by rubbing with specially-prepared charcoal which absorbs it.

A convenient method for removing deposits from ground surfaces is to rub them off with a rotating soft abrasive wheel, made simply by mounting a round typewriter eraser on the spindle of a motor, see Figure 1726. As the eraser will scratch polished surfaces, it should be used with great care.

COMBINATION OF MECHANICAL WITH OTHER METHODS

A special first-side reticle wax made of equal parts of beeswax and resin can be scrubbed away by using a soft brush with a soap solution warmed to about 175°F. If the temperature is raised to 195°F., a normal first-side reticle wax made up of 16 parts of beeswax and 1 part of carnauba wax can be removed. This method is considerably easier than scraping with a knife or similar tool.

During the polishing operation, alcohol is commonly employed for wiping off blocked elements for inspection.

Light 'water' and other stains, (but not polishing or heavy stains) and, in some cases, low-reflection films can be removed from a polished surface by rubbing it lightly with a small pad of clean absorbent cotton moistened with a mixture of rouge and diluted acetic acid. The rouge should be slow cutting, very fine, free from grit, with a $_pH$-value (a measure of alkalinity *vs.* acidity) of about 4, and similar to black micronized ferric oxide manufactured by the Porcelain Enamel Company, Baltimore, Md. The diluted acetic acid has a detergent effect and tends to prevent staining, as described in the section on rouges in Chapter 25.

TABLE OF OPTICAL GLASS CLEANING PROCESSES

	METHOD	SURFACE	TREATMENT	AGENT	MATERIALS TO BE REMOVED
1.	Mechanical	Ground bevels or edges	Abrasive action	Pumice stone	Rouge and other polishing materials
				Rotating abrasive typewriter eraser	
		Polished	Rubbing action	Moistened, finely-ground materials, *e.g.*: Calcium carbonate Silica Titanium dioxide Magnesium carbonate Magnesium oxide	Adsorbed substances (*e.g.*, gases and oily materials), before applying cements, low-reflection films, or metallic films
		Polished flat surfaces to be optically contacted		Super Floss moistened with chemically-pure ether	
		Polished		Specially-prepared charcoal	Oily materials
		Ground bevels or edges of reticles after reblocking	Scraping action	Knife-edge	First-side reticle wax
2.	Combination of mechanical with other methods	Ground bevels or edges of reticles after reblocking	Rubbing and detergent action	Soft brush and warm soap solution (175° F.)	Special first-side reticle wax made of equal parts of beeswax and rosin
				Soft brush and warm soap solution (195° F.)	First-side reticle wax made of 16 parts of beeswax and 1 part of Carnauba wax
		Polished		Rouge and diluted acetic acid on moistened pad of absorbent cotton	Light water and other stains, some low reflection films, but not polishing or heavy stains
				Alcohol	Water and traces of polishing material
				Rouge paste containing acetic acid	Light water and other stains, some low reflection films
3.	Thermal	Ground or polished	Heat to accelerate: Solvent action (in degreaser), *or* Detergent action	Trichlorethylene	Waxes
				Detergent solution	Dirt, grease, dust, and other extraneous matter
			Chill (−10 to −30° F.)	Mechanical refrigeration Dry ice	Brittle waxes (sealing-wax types)
4.	Detergent a. Neutral	Polished	Washing with solution at room temperature or slightly warmer	2 to 3 per cent solution of Aerosol OT and Orvus paste	Dirt, grease, dust, and other extraneous matter
				15cc of concentrated ammonium hydroxide and 5 to 15 grams of neutral liquid soap (or detergent) to 1 gallon of distilled water	

Figure 2301.

TABLE OF OPTICAL GLASS CLEANING PROCESSES (continued)

	METHOD	SURFACE	TREATMENT	AGENT	MATERIALS TO BE REMOVED
4. (contd)	Detergent (contd) b. Alkaline	Ground or polished	Wash in agent at 200–210°F. (The following steps are necessary to remove the alkaline solution and cool the elements gradually enough to prevent breakage.) (1) Dip in running water at 140–150°F. (2) Wash in water at 100–110°F. (3) Wash in running water at room temperature (optional). (4) Dip in alcohol. (5) Dry with soft cloth.	Solution of 1% of sodium hydroxide and ½% of sodium citrate	Shellac, fatty, greasy, resinous, and other materials—also softens heavy deposits of rouge (Poor performance on paraffin and asphaltic materials)
				Solution of 1½% of sodium sesquisilicate	
				Note: The main benefit of the above alkaline solutions is in removing shellac and softening rouge deposits. A degreaser is ordinarily used for the removal of fatty, greasy, and resinous materials.	
5.	Solvent a. Organic	Ground or polished	Cold soaking	Aliphatic hydrocarbons, such as gasoline, naptha	All adhesive waxes except sealing wax, and protective coatings based on asphaltic materials, rosin, roofing pitch, stickum, asphalt, amorphous petroleum waxes
				Chlorinated hydrocarbons, such as carbon tetrachloride, trichlorethylene (toxic—not recommended for cold soaking)	
				Coal tar hydrocarbons such as benzol, toluol, xylol (toxic—carefully control use)	
				Several aromatic or naphthenic hydrocarbon fractions with a high boiling point, have been used instead of benzol, toluol, or xylol. (These solvents, having Kauributanol numbers of over 70, are more effective than aliphatic hydrocarbons of gasoline or naptha type, but not as efficient as hot trichlorethylene)	
				Alcohol	Shellac-base sealing wax, shellac and beeswax
				Acetone or ethyl acetate (inflammable—use with adequate ventilation and fire protection)	Protective lacquer coatings based on cellulose esters, vinyl materials, etc.

Figure 2301.—(continued)

TABLE OF OPTICAL GLASS CLEANING PROCESSES (continued)

	METHOD	SURFACE	TREATMENT	AGENT	MATERIALS TO BE REMOVED
5. (contd)	Solvent a. Organic (contd)	Ground or polished	Hot liquid and/or vapor (used in a degreaser)	Trichlorethylene—preferably inhibited from going acid (toxic but can be used safely by refluxing in degreaser with reasonable precautions)	All common resins, waxes, and coatings (except those containing shellac or cellulose esters) removed quickly
		Polished		Isopropyl alcohol	Dust, lint, and moisture removed from polished surfaces before applying evaporated films
	b. Inorganic	Ground bevels or surfaces	Warm dip	Acids, *e.g.*, mixture of hydrochloric acid and acidic chlorides (danger of etching)	Rouge
		Polished	Dip	Alkalis (surface wash before applying a coating such as silver, aluminum, or an inorganic salt)	Very thin silica films

Figure 2301.—(continued)

Stains and low-reflection films are usually somewhat softer than the glass itself and, therefore, can be removed without injuring the surface by rubbing carefully with rouge. Care should be taken that the rouge paste does not dry, that rubbing is uniform over the entire surface, regardless of the amount or extent of the stain, and that none runs onto and dries on other polished surfaces, which might thus become stained themselves. For example, a rectangular flat surface should be rubbed lengthwise with parallel strokes until the entire area has been covered. This procedure insures that each part of the surface receives an equal amount of rubbing. Next the surface is washed clean with alcohol or acetone, and is then dried and inspected. If the entire stain or film coating has not been removed, the procedure is repeated.

While careful comparative tests have shown that this method will not affect the contour of the surface, it is doubtful, however, if it would be satisfactory for a surface which had to be accurate to 1/10 or 1/20 wave length.

THERMAL METHODS

Heating.—Heat is used occasionally for the removal of waxes, but is more effective when employed to accelerate solvent or detergent cleaning.

Chilling.—Chilling is used to remove brittle waxes of the sealing-wax type, which are almost always applied in very thick layers. When cooled to −10 to −30°F., these adhesives become brittle enough to lose their adhesive properties and shrink away from the elements, leaving an almost perfectly-clean surface.

DETERGENT METHODS

Neutral. — There are many detergents which will remove dirt, grease, dust, etc., but it is probably advisable to use only materials whose calcium, magnesium, and iron salts are soluble. Conventional soaps are very likely to leave an insoluble metallic film on the elements. Two of the best known detergents which work well in hard water are a 2 to 3 per cent solution of 'Aerosol OT' and 'Orvus paste'. A solution used at Frankford Arsenal for cleaning optics prior to inspection is made by adding 15 cc of concentrated ammonium hydroxide

and 5 to 15 grams of neutral liquid soap (or detergent) to a gallon of distilled water.

Alkaline. *Alkaline Materials.*—While alkaline detergents may be used to clean shellac, fatty, greasy, resinous, and other materials from a glass surface, paraffin and asphaltic materials that do not saponify cannot be removed as cleanly nor as rapidly as saponifiable materials. It should be remembered that some alkaline detergents will injure the surface of the glass.

While the concentration of alkaline solutions and the temperatures at which they are used vary, more effective results are generally obtained by using a short application of a warm alkali than by using a cold solution for a longer time. This is because heat tends to melt grease and wax, and thus to facilitate their saponification and emulsification. One effective alkaline cleaning solution contains 1 per cent of sodium hydroxide and ½ per cent of sodium citrate, while another contains simply 1½ per cent of sodium sesquisilicate.

Alkali Shellac-removal System.—A successful alkali shellac-removal system is illustrated diagrammatically in Figure 2302. Cleaning by use of this system is faster than merely soaking in alcohol. It also eliminates much of the rubbing with consequent reduction in damage from scratching, and softens heavy deposits of rouge, thus making it practicable to wipe such deposits off while the elements are drying.

As outlined in Figure 2302, tank 1 contains about 1 cubic foot of alkaline solution containing by weight 1 per cent sodium hydroxide and ½ per cent sodium citrate. Tanks 2 and 3 are merely washing tanks to remove any alkali that may be left on the glass surfaces. The pH-value of tank 3 should be checked occasionally, and should never be allowed to exceed 7. After rinsing in tanks 2 and 3, the glass is wet in alcohol to avoid water stains which usually occur when water is allowed to dry on a glass surface. After this, the optical elements are dried with a soft cloth and inspected.

The temperature of tank 2 should be maintained between 140 and 150°F., and must not be permitted to fall below 130°F. The temperature of tank 3, while not so critical, should not be below room temperature. If desired, the elements may be warmed before immersion in tank 1.

In using this system, the elements are placed in racks made of wood or metal rods covered with 'Saran' tubing, and are then placed in tank 1 for not more than 60 seconds. While in tank 1, they are moved slowly up and down. After removal from tank 1, they are placed in tank 2 immediately, left for 1 or 2 minutes, and then washed in tank 3. If desired, tank 4 (which is an optional addition to the system) may be used, in which case the temperature of tank 3 should be held a little above that of tank 4.

This method is quite satisfactory with borosilicate crown glass with an index of refraction of 1.57, and has also been used successfully with flint glass by reducing the immersion time in tank 1 to 40 seconds.

Test of Alkali Solutions.—The following method may be used for testing the etching effect of an alkaline solution on any type of glass. An optical flat is placed in contact with a flat polished surface on the type of glass that it is desired to test, and the pattern of interference bands thus formed is carefully observed. Next, half of the surface is masked carefully and the whole element is immersed in the solution to be tested for at least twice as long as is required for the cleaning process. After immersion, the element is thoroughly washed and carefully dried. Then, after it has been allowed to come to room temperature, it is tested again with the optical flat. If there is no change in the pattern of the interference bands between the half that was exposed to the solution and the part that was under the mask, it can be assumed that the solution has not injured the surface. In addition, it is advisable to examine both ends of the element for signs of leaching, using a microscope and other usual optical inspection methods.

SOLVENT METHODS

In most optical shops, hot or cold organic and inorganic solvents are used for cleaning. They work well on practically all of the adhesive waxes and most of the protective coatings, and are sometimes used for the removal of part or all of the hard sealing waxes. The solvent employed depends upon the nature of the mate-

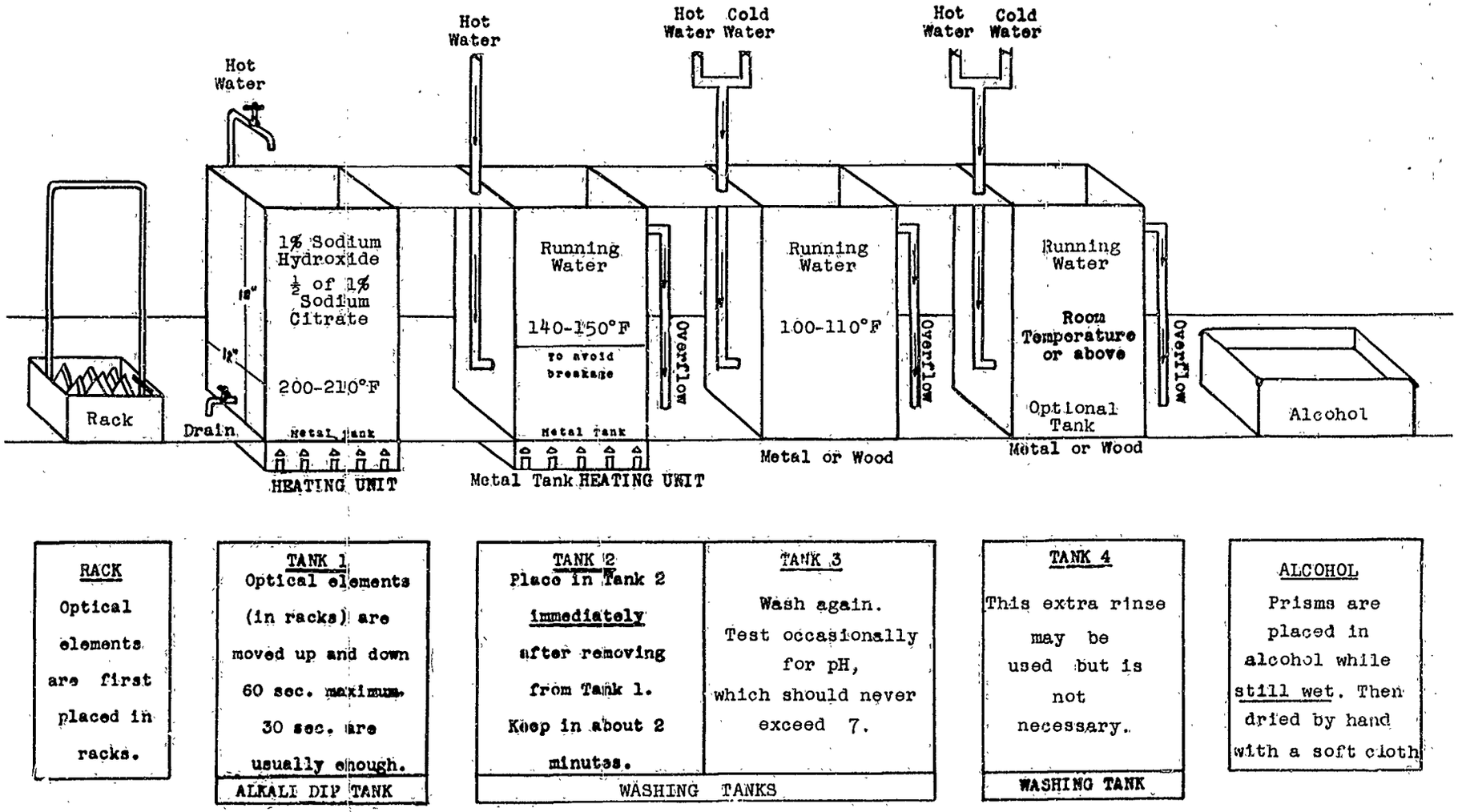

Figure 2302.—Diagram of Alkali Shellac-removal System.

rial to be removed, and such factors as solvent power, toxicity, cost, and availability.

Organic Solvents

Cold Soaking. — The optical elements are set in shallow pans of solvent and covered with glass plates. After a number of hours of soaking they are removed, wiped off, and rinsed with fresh solvent.

Solvents Used. — Aliphatic hydrocarbons such as gasoline and naptha, are used for removal of waxes containing paraffin, rosin, roofing pitch, stickum, asphalt, and amorphous petroleum waxes. Chlorinated hydrocarbons, such as carbon tetrachloride and trichlorethylene have been used, but due to their toxicity, use is not recommended. Coal tar hydrocarbons such as benzol, toluol, and xylol are also toxic, and as some persons are particularly allergic to these materials, they should be used only under carefully-controlled conditions. Several aromatic or naphthenic hydrocarbon fractions somewhat higher in boiling point than benzol, toluol, or xylol may be used as substitutes for the latter Aromatic or naphthenic hydrocarbon fractions have the advantage of being less toxic and of having a much higher flash point than either benzol, toluol, or xylol, but are not quite as efficient as solvents. Satisfactory solvents having Kauri-butanol numbers of over 70 are made up from mid-continent and west-coast crude oils. These materials are more effective than the straight-chain hydrocarbons of the gasoline or naptha type, but are not as efficient for de-waxing as hot trichlorethylene, discussed later in this chapter. Alcohol is usually employed for shellac-base sealing wax, and shellac and beeswax. Although acetone or ethyl acetate are inflammable, they will remove most protective lacquer coatings.

Precautions When Using Solvents.—Because of the volatility and inflammability of most of the solvents mentioned above, it is not ordinarily considered wise to heat them above room temperature, and strict safety regulations must be employed wherever they are used. Safety precautions to be observed when inflammable solvents are used should include the careful layout of process and working space, the use of the least inflammable and toxic solvents which will do the job efficiently, the safe storage of the minimum amount of solvents that are needed at any one time, the rapid and safe disposal of used solvents, the control and removal, if necessary, of inflammable or toxic vapors, and the use of such safety equipment, precautions, and personnel training as may be advisable.

With any solvent that is inflammable to any extent, especially gasoline, naphtha, acetone, and ethyl acetate, it is important not only to provide adequate ventilation, but also to have both installed automatic and conveniently-located hand fire entinguishers of the type required for the solvent involved, as well as fire blankets, etc. In the case of toxic, but non-inflammable solvents, there should be good ventilation of the room where the solvents are used, as well as direct exhaust of the vapors by means of hoods over the benches and racks where the solvents are used or stored.

Hot Liquid and/or Hot Vapor.—In many cases, optical elements may be cleaned most efficiently by using a refluxing apparatus, known as a degreaser, in which the elements are exposed to heated solvents, either in liquid or vapor form or, in some instances, to both the liquid and vapor at different intervals. Various organic solvents have been found useful in this type of cleaning application, one of the most important being trichlorethylene.

Two-dip Degreaser.—The two-dip degreaser contains a tank which is divided into two compartments by a baffle (see Figure 2303). When in use and filled with a suitable solvent, the lower tank is heated, causing the solvent to boil and thus form a vapor which rises into the body of the degreaser above both compartments. The upper part of the body of the tank is surrounded by a water jacket containing a flow of cold water. This jacket cools the vapor which condenses and falls into the unheated compartment; then, as more vapor condenses, the liquid solvent overflows into the heated compartment and the process thus goes through a continuing cycle. Since the vapor is heavier than air, proper regulation of heating and cooling results in a desirable vapor level within the degreaser and prevents escape into the atmosphere.

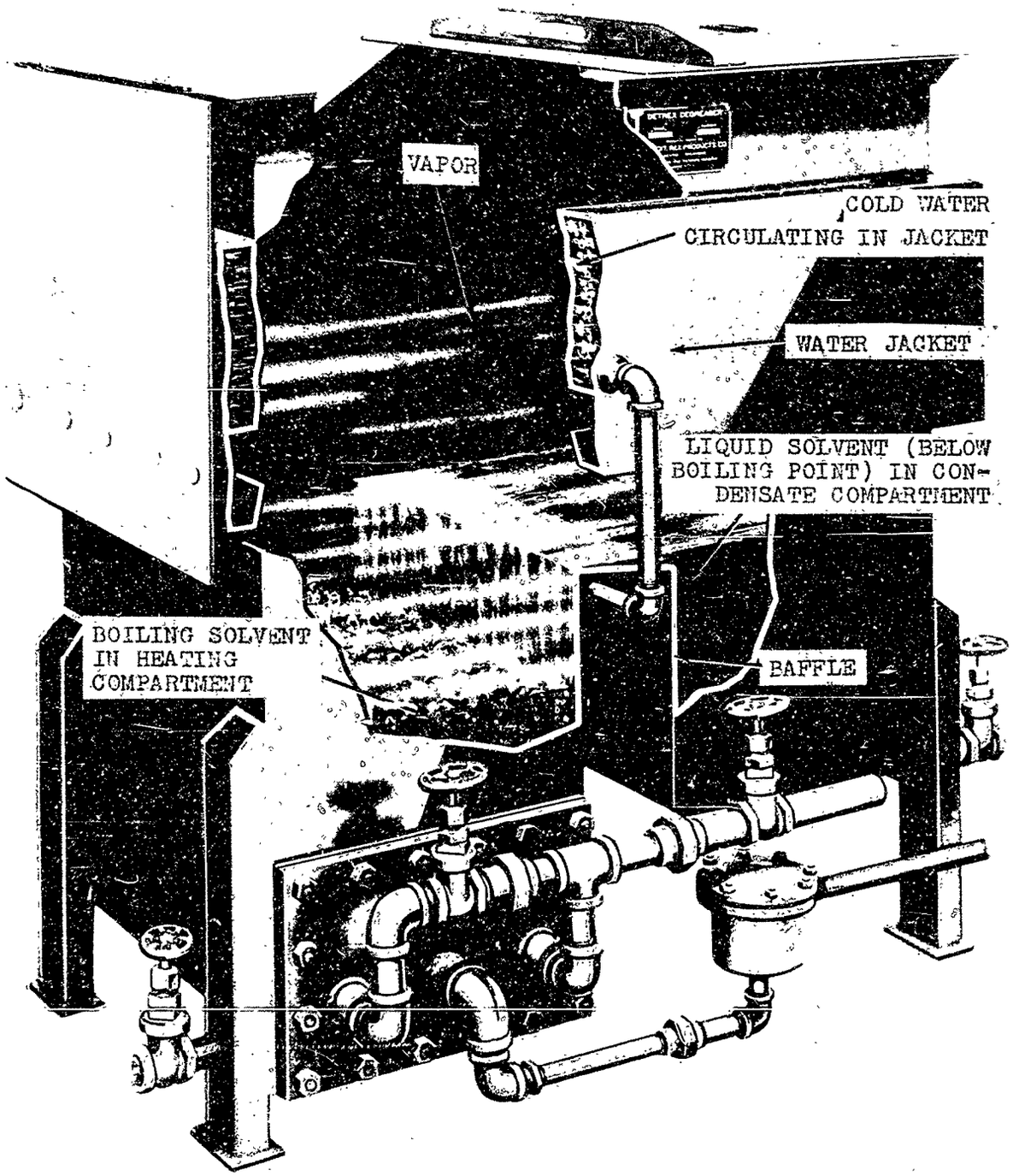

Detroit Rex Products Company

Figure 2303.—Cut-away View of Two-dip Degreaser.

It is advisable that the water jacket be equipped with a temperature control valve, so that the temperature in the top of the main tank can be controlled and thus prevent escape of solvent vapor. For example, if trichlorethylene is the solvent in use, the temperature in the top of the main tank can be kept close to 90°F. This will insure that the trichlorethylene will condense properly and, at the same time, prevent the condensation of any water vapor. It is important that water is not introduced into the machine, either directly on the elements to be cleaned or in the form of condensate from the air, as it will float on the top of the solvent, thus making efficient cleaning difficult, and, at the same time, will rust the machine itself.

(a) Cleaning with a Degreaser.—The elements that are to be cleaned should be placed in a rack or basket that is made of non-absorbent material, avoiding the use of cloth, wood, or paper. The elements should be arranged so that the solvent will have room to penetrate freely over all of the surfaces. A special rack developed by Minneapolis-Honeywell Regulator Company for holding small abbe prisms is illustrated in Figure 2304. In this rack, the elements cannot touch each other and every portion of their surfaces is exposed to the action of the solvent.

When the rack has been loaded, it is slowly placed in the tank of the machine and held in the vaporized region just above the lower compartments until all of the waxes, greases, resins, and other foreign materials appear to be dissolved. This usually requires about 30 seconds.

As the vapor condenses on the relatively cool surfaces of the elements, the foreign materials are dissolved and, together with the condensed vapor, fall into the condensate compartment. Next the rack is rinsed in the clean condensed liquid in the condensate compartment, and afterwards is held in the vapor above the heating compartment for 10 to 15 seconds. Finally the rack is withdrawn from the machine slowly, holding it in the top of the main tank to dry, *as care should be taken not to remove any solvent from the machine.* While in operation the degreaser should never be placed under a hood or near a draft which might draw solvent vapor from the top of the machine.

(b) Cleaning the Degreaser.—Cleaning degreasers which have been used to remove waxes is somewhat of a problem, although the initial procedure is quite simple. While the heating unit is kept on, the clean solvent is withdrawn from the condensate compartment until most of the solvent has been boiled over and drawn off. When the dirty, dissolved material in the heating compartment shows considerably increased viscosity and froths enough to obscure the surface of the liquid, the heating unit is shut off. The remaining wax or dirt is then scraped out, and the whole machine is wiped out with a solvent, such as gasoline or kerosene. In addition, it is best to clean the machine with a 10 per cent solution of soda ash about once a month, and at any time the solvent has gone acid.

As it is almost impossible to avoid contact with trichlorethylene fumes when cleaning a degreaser in which this solvent has been used, operators should not be selected for this duty who seem to be particularly sensitive to these fumes. There should be at least two operators at the machine throughout the cleaning operation and they should wear gas masks with proper cartridges. If safety regulations are enforced well, the chance of any injury is slight.

Slush-type Degreaser. — This type of degreaser (see Figure 2305) is provided with a pump, hose, and nozzle so that hot clean solvent may be sprayed on the elements. This machine is more effective where very thick coatings of wax are to be removed, because it supplies mechanical action in addition to heat and solvent action. This additional action helps to melt off shellac-base sealing waxes not ordinarily removed when trichlorethylene is used as a solvent. While trichlorethylene used in this type degreaser does not usually remove shellac, or shellac-base sealing wax completely, some operators have reported favorable results.

Trichlorethylene.—Although slightly more expensive, the use of trichlorethylene that has been inhibited from going acid, is probably advisable in either a two-dip or a slush-type degreaser. This is because of the small amount of solvent that is used in comparison to the

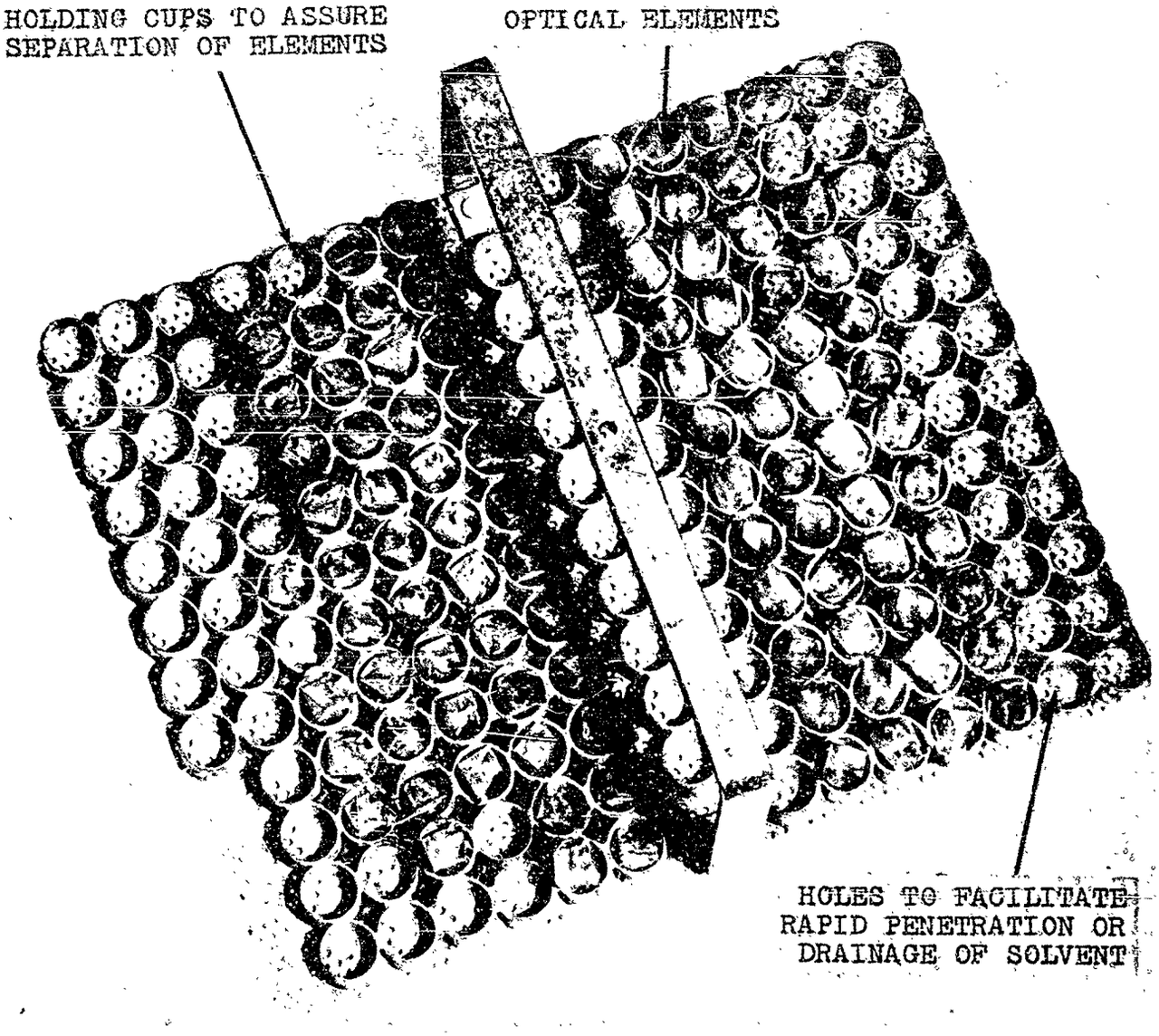

Minneapolis–Honeywell Regulator Company

Figure 2304.—Special Rack Used to Hold Small Abbe Prisms While Cleaning.

amount of glass cleaned. If trichlorethylene is overheated very much, or if acid gets into it, it may produce phosgene and hydrochloric acid which will cause progressive decomposition of the trichlorethylene.

Use of trichlorethylene in a degreaser removes practically all common resins, waxes, and coatings quickly, except those containing shellac or nitrocellulose. Trichlorethylene is toxic but non-inflammable and, if the conditions of use are properly controlled, it remains in the degreaser where it can do no harm. Trichlorethylene solvent must be used at its boiling point, 188°F., for otherwise it would be no more efficient than cold soaking in xylol, benzol, or toluol, since to remove solid waxes rapidly, they must be melted first. (From 1 to 2 minutes is a normal time for trichlorethylene de-waxing.)

The condition of the solvent may be checked by the following procedure: 50 cc of clean solvent are removed from the condensate compartment of the two-dip degreaser and placed

in a 250-cc Erlenmeyer flask with 50 cc of distilled water to which has been added 30 cc methyl orange solution; a stopper is placed in the flask and the mixture is shaken vigorously for 60 seconds. If the methyl orange turns red, the trichlorethylene is acid. If the indicator is still orange it is titrated by addition of successive amounts of 1/10 normal hydrochloric acid; it is then shaken for 1 minute and observed. If necessary, this process is repeated until the indicator turns red. The tendency of the solvent to go acid in the degreaser may be estimated by comparing the amount of hydrochloric acid used in this test with the amount used in a similar titration with unused solvent. Commercial trichlorethylene will usually require from 2 to 3 cc of 1/10 normal hydrochloric acid, whereas inhibited trichlorethylene will require about 25 cc of 1/10 normal hydrochloric acid.

Other Solvents.—It is possible to use solvents other than chlorinated solvents in refluxing units of the degreaser type. The vapor density of almost any organic solvent is higher than air and, therefore, most organic solvents may be used under reflux if conditions are carefully controlled. However, when inflammable solvents are used under reflux, extraordinary precautions must be taken to minimize fire hazards.

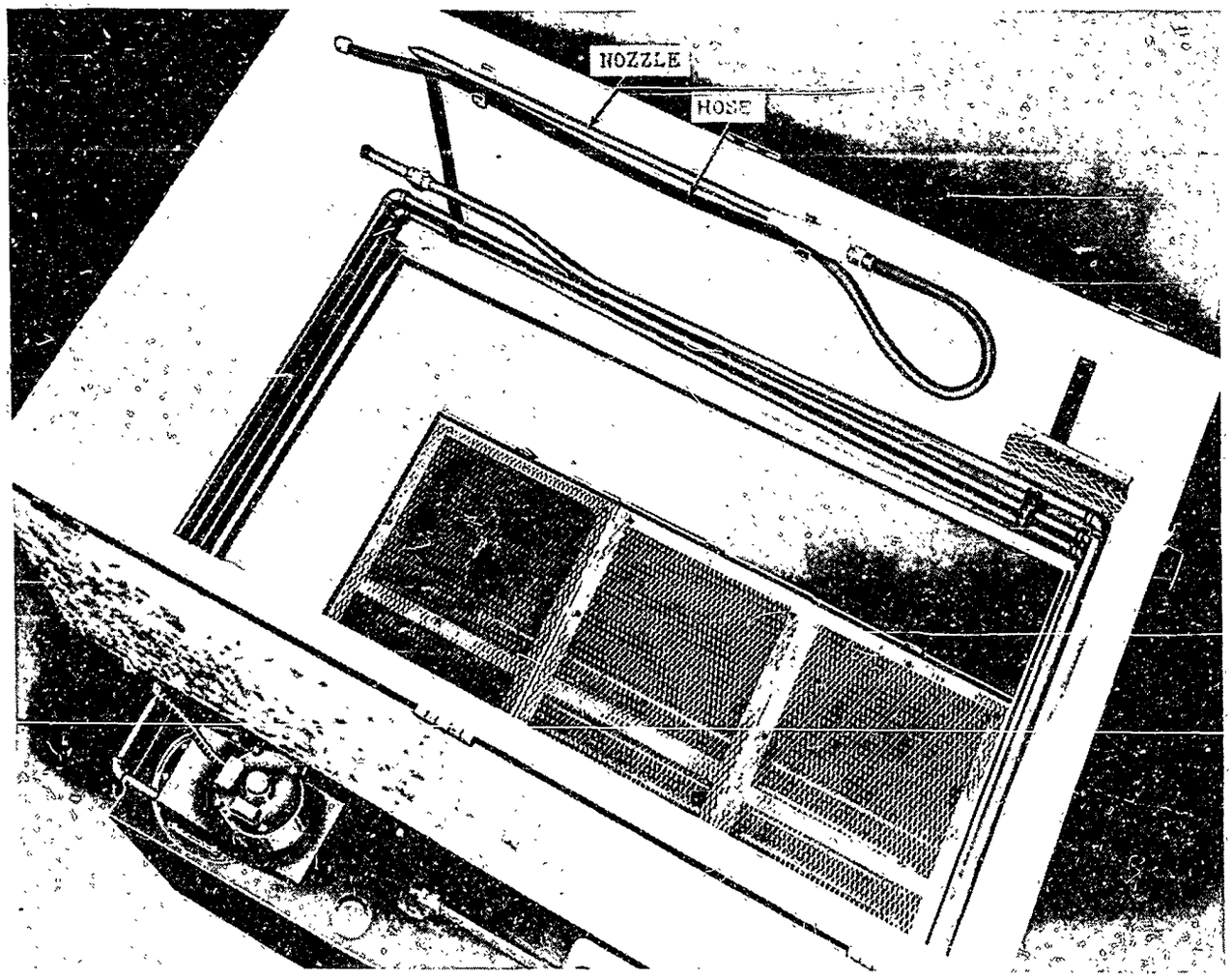

Detroit Rex Products Company

Figure 2305.—Top View of Slush-type Degreaser.

It is doubtful if the use of other solvents in degreasers will ever become as important as trichlorethylene, but for special purposes, such as cleaning elements for assembly, other materials may prove valuable. Isopropyl alcohol is the only important solvent (other than chlorinated hydrocarbon solvents) which is now used in a degreaser. It is used thus for drying optical elements which must have dust- and lint-free surfaces prior to the application of evaporated films.

Inorganic Solvents

Acids.—Acids are occasionally used to dissolve rouge from optical elements. A mixture of hydrochloric acid and acidic chlorides is effective for the removal of rouge from bevels, ground surfaces, etc. Such a solution is used warm and must be kept under a hood. There is danger of etching flint glass with it.

Alkalis.—Dilute alkalis are sometimes employed for the removal of very thin silica films. An alkaline wash is useful when a coating such as silver, aluminum, or an inorganic salt is to be applied to the glass.* However, alkalis are used principally as detergents, rather than as solvents.

*Grebenschikov, I. V. *Surface Properties of Glass.* Keramika I Steklo, 7, No. 11–2 36–611. 1931.

CLEANING METHODS USED BY VARIOUS MANUFACTURERS

Minneapolis-Honeywell Regulator Company

This company has developed a booth especially adapted for cleaning and washing elements before coating (see Figure 2306) that is efficient and convenient to use. Each operator is supplied with tanks and pans for the various liquids that are needed, and suitable drains are provided for carrying off any material that is to be discarded. It will be noted that hot and cold water, both plain and distilled, as well as acetone, are piped to the wash booth. In operation, the elements are mounted in specially designed forceps, and washed by the left operator, who passes them along to the right. After the other operators complete the cleaning, the elements are removed from the forceps, and proceed around the corner to the right where they are inspected.

Zenith Optical Company

The Zenith Optical Company has developed a spray tank (see Figure 2307) equipped with permanently-fixed spray pipes, that has been successfully used to replace the usual soaking steps in cleaning optical elements. The solution is contained in a reservoir in the bottom of the tank from which it is pumped to the spray pipes. From these it is sprayed on the elements and then returns through a screen to the reservoir tank for recirculation. The combination of mechanical and solvent action operates to shorten the cleaning time considerably.

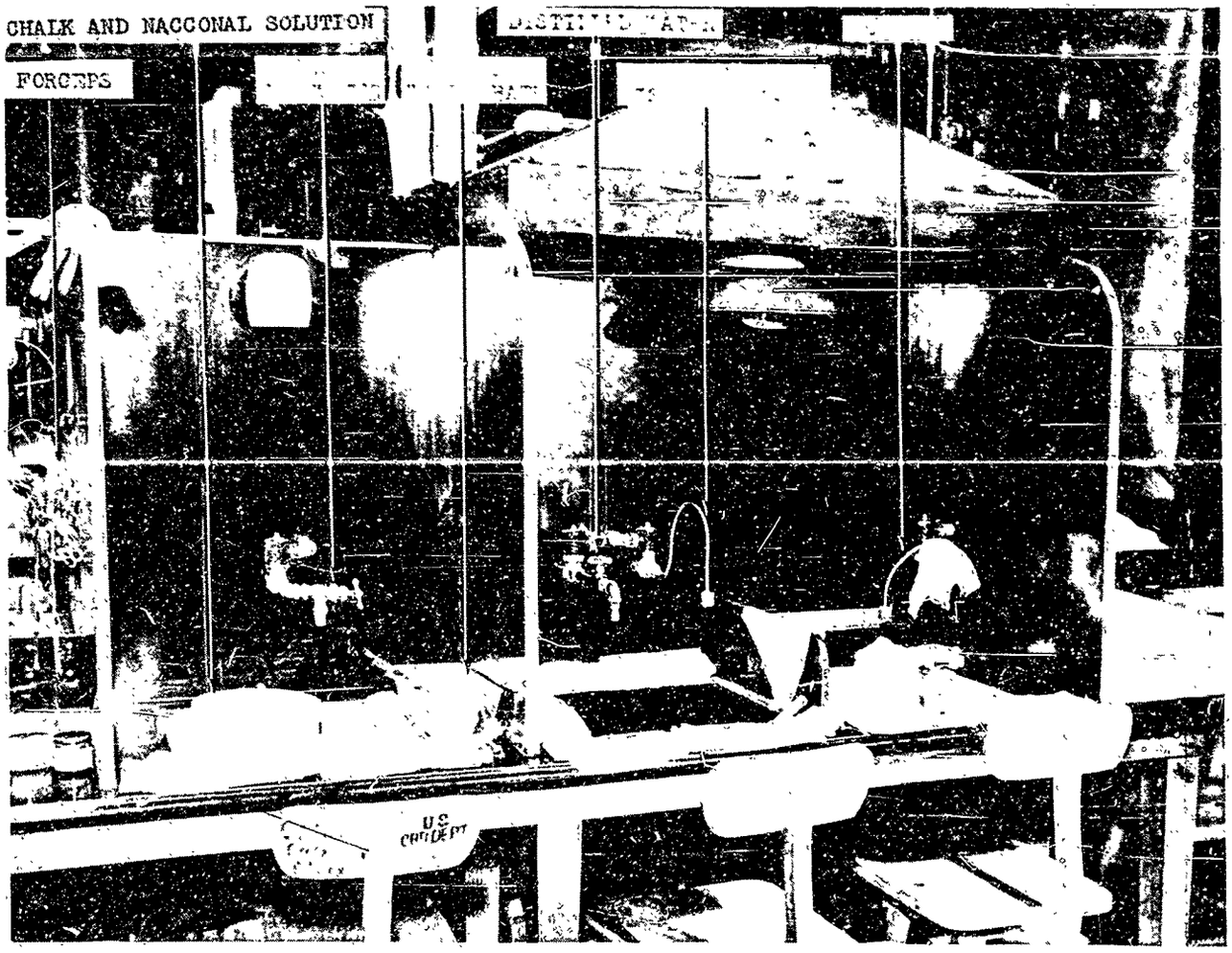

Minneapolis–Honeywell Regulator Company

Figure 2306.—Setup for Cleaning Lenses Before Coating.

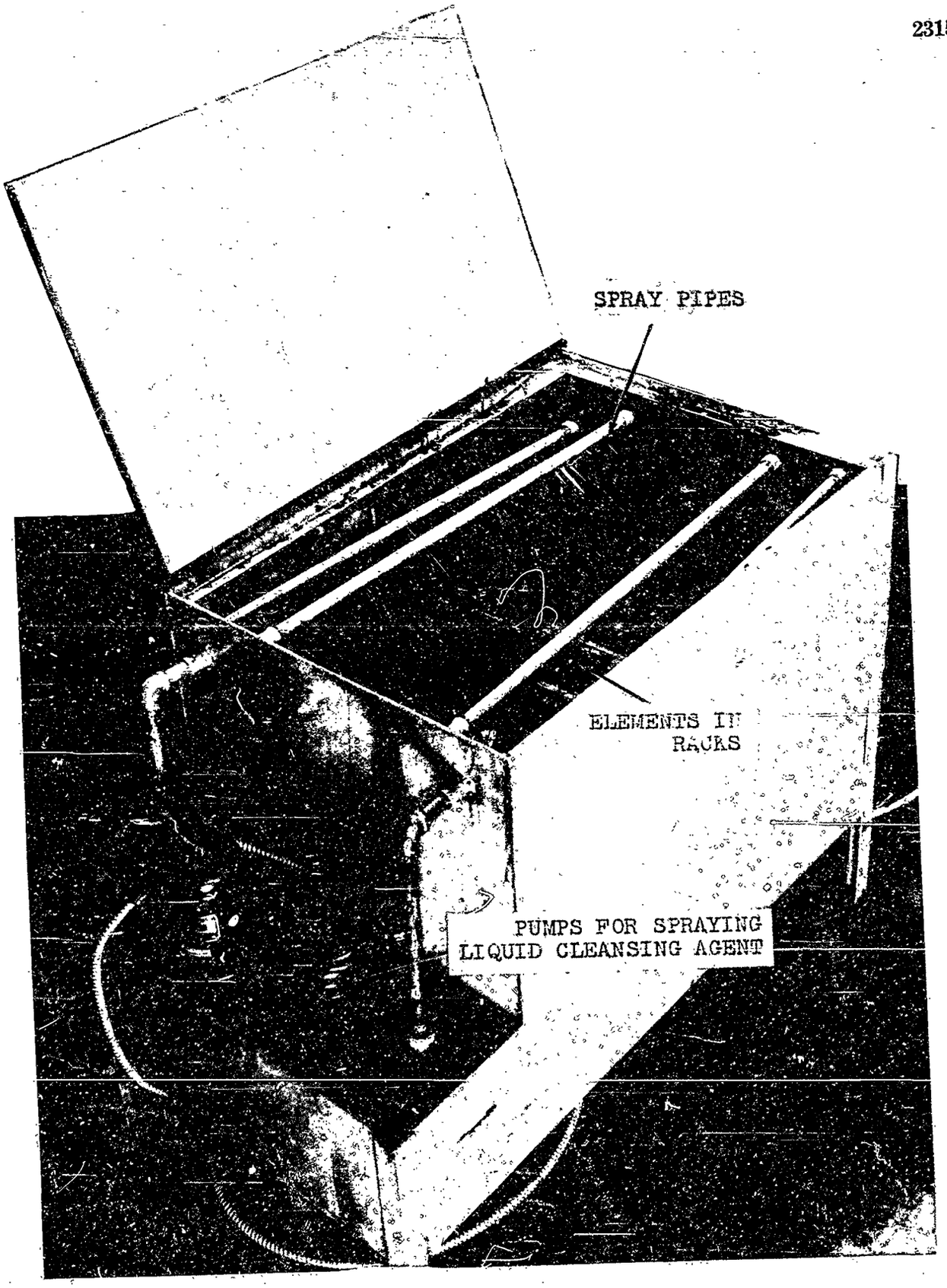

Zenith Optical Company

Figure 2307.—Spray-tank Type of Cleaning Unit.

CHAPTER 24

INSPECTING OPTICAL ELEMENTS

	Page No.
Glossary of Optical Properties and Defects.	2406
Visual Inspection.	2411
Facilities for Inspecting.	2412
Illumination of Room.	2412
Backgrounds.	2412
Illumination of the Element.	2412
Incandescent Lamps.	2413
Fluorescent Lamps.	2414
Microscope Lamps.	2414
Standardization of Defects.	2414
Determining Classes of Surface Defects.	2414
Determining Allowable Sizes of Surface Defects.	2415
Minneapolis–Honeywell Method.	2415
Eastman Kodak Method.	2415
Methods of Checking Inspection.	2416
Special Inspection Methods.	2417
Evaporated Film Coatings.	2417
Low-reflection Films.	2417
Reflecting Films.	2418
Chemically Silvered Surfaces.	2418
Filters.	2418
Reticles.	2419
Mechanical Inspection Equipment.	2419
Linear Dimensions.	2419
Micrometers and Depth Gages.	2419
Go—No–Go Gages.	2420
Dial Gage.	2420
Fixtures for Mounting Dial Gages.	2422
Angle Blocks for Use with Dial Gages.	2422

	Page No.
Surface Curvature.	2422
Dial-gage Ring Spherometer.	2422
Laboratory-type Spherometer.	2423
Radius Gage (Template).	2425
Straightedge.	2425
Angle Dimensions.	2425
Steel Square.	2425
Bar Gage.	2425
Adjustable Bar Gage.	2425
Bevel Protractor.	2425
Fixtures Including Dial Gages.	2425
Master Reference Pieces.	2427
Collimator Inspection Equipment.	2427
The Collimator.	2427
The Autocollimator.	2429
Lens Bench.	2429
Equivalent Focal Length.	2431
Back Focal Length.	2433
Aberrations.	2433
Spherical Aberration.	2433
Chromatic Aberration.	2433
Astigmatism.	2433
Coma.	2433
Curvature of Field.	2433
Distortion.	2433
Eccentricity.	2433
Concentricity Testing Instruments.	2434
Testing Single Lenses.	2434
Principle of Operation.	2434
Method of Operation.	2435
Testing and Aligning Cemented Doublets.	2436
The Spectrometer.	2437
The Goniometer.	2438

	Page No.
Pyramidal-error Detecting Instrument.	2438
Parallelism Instrument.	2439
Functional Collimator Fixtures.	2439
Special Inspection Equipment.	2439
Reference Surfaces.	2439
Star Test.	2440
Interferometer.	2440
Fixture for Testing Definition and Resolving Power of Various Elements.	2440
Toolmaker's Microscope.	2442

Frequent reference is made throughout this manual to the inspection of various types of optical elements. Where process inspection is involved, *i.e.*, where the inspection is a necessary part of the operational procedure employed by a workman during any specific operation, it is often described in detail in the text when it occurs. For example, Chapter 15, *Correcting Roof-angle Prisms,* contains a detailed discussion of the use of angle gages, such as bar gages and try squares; and Chapter 22, *Optical Flats and Test Glasses,* contains a detailed discussion of the use of optical flats and test glasses while optical elements are being processed. In some cases, however, process inspection is referred to the present chapter. In addition, most inspection-station inspections, *i.e.*, those usually made by an inspector as distinguished from those usually made by a workman during the processing of an optical element, are referred to the present chapter.

As a result of the above-mentioned practice, an attempt is made in this chapter to examine the function of inspection as a whole, and to supply any necessary information not previously covered in the text.

Efficient optical inspection is extremely important in the manufacture of precision optical elements. The necessity for promptly detecting substandard elements while processing is obvious, because if they should slip by and proceed through additional stages, money and labor is wasted. The need for thorough inspection at inspection stations (particularly the final inspection) is not always as clearly understood, but there are several reasons why such inspection should be as thorough as process inspection.

One reason is that the assembly of both optical elements and optical instruments is complicated by the close tolerances the designer must assign in order to obtain optimum performance from the instrument. Inefficient inspection thus makes the assembler's task far more difficult.

Another reason is that all optical elements should be thoroughly inspected for all undesirable properties and defects which may show up in the instrument after assembly, and elements containing such undesirable properties or defects should be discarded in order to avoid costly and time-consuming replacement operations. For example, a dig or a seed as small in diameter as 0.0001 inch is visible as a blob or a blot on the reticles of certain instruments. The detection of such a defect *after* the element has been assembled in the instrument makes a replacement operation necessary. Again, if the focal length of a lens is beyond the permissible tolerance or the deviation in the angles of a prism is greater than that permitted, the performance of the instrument will be seriously affected, and a similar costly disassembly must be made to replace the element. Since it is not a simple matter to pick out a defective lens or prism in an instrument which contains four, five, or more optical elements, it is therefore important that the inspector prevent such elements from ever reaching the assembler.

While the technique of surface inspection is relatively simple, the maintenance of standards is much more difficult. An inspector with normal vision and a moderate amount of training can satisfactorily detect scratches and pits. The problem is to 'calibrate' the inspector. Once the maximum pit or scratch has been established for a given element, it is desirable that the inspector reject elements having defects of this or greater magnitude, and pass those with lesser defects. However, even the most reliable inspectors unconsciously tend to tighten or loosen their standards. Several methods have been developed to insure uniformity, one involving the use of disks containing defects of varying magnitude, and the use of these defects as standards. With such standards it is possible for the inspector to check himself daily.

The use of such standards does not take all the burden from the inspector. He is still required to exercise considerable judgment, and it should be emphasized that thorough training and good supervision should be provided for inspectors examining elements for surface defects.

Space prevents giving more than a brief mention of such common devices as micrometers, magnifiers, and scales. A very limited discussion is made of devices which are fully

INSPECTION TABLE

GROUP	PROPERTY OR DEFECT	INSPECTION STATIONS									
		GLASS ISSUE		ROUGH GRIND		POLISH		Centering & Edging	Coating	FINAL	
		Slab Glass	Formed Blanks	Lens Blanks	Flat Work	Lenses	Flat Work			Lenses	Flat Work
MATERIAL											
	Absorption	2	2	–	–	–	–	–	–	–	–
	Inclusions (blisters, bubbles, feathers, folds, seeds, stones)	2	2	–	–	V	V	–	–	V	V
	Fractures, cracks	2&V	2&V	V	V	V	V	V	–	V	V
	Striae	2	2	2	2	V	V	–	–	V	V
	Refractive index	2	2	–	–	–	–	–	–	–	–
	Dispersive power	2	2	–	–	–	–	–	–	–	–
	Strain	2	2	–	–	–	–	–	–	–	–
MANUFACTURING											
Dimensional	Linear dimensions	M	M	M	M	M	M	M	–	M	M
	Out-of-round	–	M	–	–	–	–	M	–	M	M
	Surface Curvature	–	M	M	–	S	–	–	–	C	–
Surface	Chips	V	V	V	V	V	V	V	V	V	V
	Dig, dirt hole, orange peel, pit, rub, scratch, whip	–	–	–	–	V	V	–	–	V	V
	Poor polish, stains (burns, water spots)	–	–	–	–	V	V	–	–	V	V
Centering & Edging	Chuck marks, stick marks	–	–	–	–	–	–	V	–	V	V
Beveling	Safety bevel	–	–	V	V	–	–	V	–	–	–
	Size of bevel	–	–	V	V	–	–	V	–	*M or* V	*M or* V
	Wrong-side bevel	–	–	–	–	–	–	V	–	V	V
Etching	Quality of lines and filling	–	–	–	–	–	–	–	–	–	V
	Accuracy of pattern, width of line	–	–	–	–	–	–	–	–	–	S
Chemical Silvering	Pinholes, scratches, stains	–	–	–	–	–	–	–	V	–	V
Low-Reflection Evaporated Film	Durability, color, pinholes, scratches, spatters, stains, uniformity, wrong side	–	–	–	–	–	–	–	V	V	V
Reflecting Evaporated Films	Adherence, pinholes, scratches, spatters, stains	–	–	–	–	–	–	–	V	–	V
Cementing	Overhang	–	–	–	–	–	–	–	–	M	M
	Bubbles, dirt, discoloration, feathering, lint, separation (starts, blisters)	–	–	–	–	–	–	–	–	V	V
Optical	Definition	–	–	–	–	–	–	–	–	*C or* S	*C or* S
	Angle of deviation, pyramidal error	–	–	–	–	–	–	–	–	–	*C or* S
	Equivalent focal length	–	–	–	–	–	–	–	–	C	C
	Back focal length	–	–	–	–	–	–	–	–	*C or* S	*C or* S
	Resolution	–	–	–	–	–	–	–	–	S	S
	Concentricity	–	–	–	–	–	–	–	–	C	C

EXPLANATION OF SYMBOLS
2=See Chapter 2, *Inspecting Optical Glass*
V=Visual Inspection
M=Mechanical Inspection
C=Collimator Inspection
S=Special Inspection

Figure 2401.

described in other textbooks. Among these are the spectrometer and the interferometer. However, an effort has been made to describe the visual inspection of optical elements in detail, since very little appears to have been published on this subject.

As an aid to a more complete understanding of inspection practice, a table (Figure 2401) and a glossary of terms are incorporated in the beginning of the chapter.

In the glossary an attempt is made both to define and to relate a large number of terms, covering properties and defects which are the subjects of inspection in optical elements. Some of these terms are universal throughout the optical industry, while others are variant terms with identical meanings.

By defining these terms as simply as possible, and by relating them, one to another, it is hoped that a reasonable degree of standardization of meaning is achieved.

In Figure 2401, *Inspection Table*, types of inspections are indicated for various properties and defects, as they relate to a specific group or a specific stage in manufacture. As will be noted, the symbols used ("V," "M," "C," and "S") correspond with the main types of inspection as exemplified in the main headings of the chapter—"Visual Inspection," "Mechanical Inspection Equipment," "Collimator Inspection Equipment," and "Special Inspection Equipment." The only exception ("2") being used as a reference to the inspection of raw glass which is covered in Chapter 2.

GLOSSARY OF OPTICAL PROPERTIES AND DEFECTS

Absorption.—The loss of light intensity observed in an emergent beam, in excess of the losses due to reflection at the glass surfaces. (See also Chapter 2.)

Accuracy of Pattern.—The degree to which a pattern of etched lines, usually on a reticle, conforms to specifications.

Adherence (as applied to evaporated films).—The degree of adhesion of a reflecting evaporated film to an optical element. (See also "Durability.")

Angle of Deviation.—The angle between the path of an incident ray and the refracted ray. (See also "Deviation.")

Astigmatism.—The defect of a lens whereby a single point of the object is not imaged as a point, but rather as two mutually-perpendicular short focal lines, one line being closer to the lens than the other. (See also "Definition.")

Astigmatic Surface.—A surface which is cylindrical about one or more axes. (See also "Definition.")

Back Focal Length.—See "Focal Length."

Bevel (or Chamfer).—A bevel is a surface ground at the intersection of two or more surfaces to provide a stronger edge, to reduce the possibility of chipping, and for ease of mounting in the instrument. A safety or protection bevel is one that is ground on for use during processing to avoid chipping, and is eliminated during the centering and edging operation. A wrong-side bevel is one that has been ground at the edge of the wrong surface during the centering and edging operation.

Birefringence.—The difference in refractive index from the normal refractive index of the glass which is caused either by placing the glass under compression or under tension. Birefringence is a form of strain. (See Chapter 2 under "Inspecting Slab Glass—Strain.") (See also "Strain.")

Blemish.—A general term sometimes used to cover certain visible material and surface defects which are not sufficiently pronounced to impair noticeably the optical performance of an element. Optical elements are not inspected for 'blemishes' as such, but are inspected for the specific defects which apply. Blemishes should not be referred to as 'beauty defects' because the latter term indicates that they are merely a matter of appearance, whereas if they are sufficiently numerous, they will interfere with the proper optical performance of the element.

Blister.—An elongated bubble or seed, elliptical in shape. (See also "Inclusion.")

Blister, Cement. — An inner area between two surfaces either where there is no cement or where cement has pulled away from one or both of the surfaces. (See also "Separation.")

Block Reek. — A series of short, intermittently-spaced scratches occurring in a line or short arc. (See also "Scratch.")

Bubble.—An air or gas pocket enclosed in the glass itself, usually spherical in shape and brilliant in appearance. (See also "Inclusion.")

Bubble, Cement.—Air inclusion between cemented surfaces.

Bubble, Open.—See "Pit."

Burn.—A reddish stain caused by drying up or glazing of a polishing tool. A burn is generally found on the central area of a lens.

Chamfer.—See "Bevel."

Chemical Silvering.—Chemical silvering is a reflecting film, which is applied chemically to the back surfaces of mirrors and prisms. It is backed up by a coating of copper and, if an external surface, is then coated with a durable paint.

Chip.—A complete fracture at the edge of a lens or other optical element from which a shell-like fragment has been removed.

Chromatic Aberration.—The inability of a lens to focus light of different colors, *i.e.*, different wave lengths, at a single point. When light passes through a single lens it is dispersed into its component colors, causing the image to be tinted at its edges with different colors. (See also "Definition.")

Chuck Mark.—A circular scratch made by the chuck when a lens is being centered by means of a wooden stick. (See also "Scratch" and "Stick Mark.")

Color (as applied to low-reflection evaporated films). — The color of a low-reflection evaporated film denotes the thickness of the film. In general a purple color is desirable, but in actual inspection practice an allowable color-range tolerance must be set up and embodied on a chart or a set of sample lenses. The color observed in the film is then compared with the actual colors on the chart or sample so as to achieve a basis for acceptance or rejection.

Coma. — Spherical aberrations of oblique pencils of light, so named from the comet-shaped image of a point formed by a lens exhibiting coma. This aberration is produced by the unequal refraction of the different parts of a lens. (See also "Definition.")

Concentricity.—The coincidence of the geometrical and the optical axes of a lens. (See also "Geometrical Axis" and "Optical Axis".)

Cord.—(See "Stria.")

Crack.—A crack is a partial separation of the glass without an actual opening. (See also "Fracture.")

Crack, Fire.—A shallow separation of the glass without an actual opening, caused in pressing, which gives the glass surface a crazed or crackled appearance. It may appear over the entire surface of the glass, or only at the edge and run a short distance toward the center. (See also "Fracture.")

Crush.—A cluster of extremely small pits resulting in a dull gray appearance over the area of the cluster. (See also "Poor Polish.")

Curvature of the Field. — An aberration which causes rays of light passing through a lens to come to a focus at points which do not lie in the same plane. The field of view has a 'dished' appearance. (See also "Definition.")

Cut.—A heavy scratch having easily visible secondary chips extending from the edge of the scratch. (See also "Chips" and "Scratch.")

Definition.—The term used to describe the quality of the image formed by a lens or optical system. Image quality is determined by the amount of astigmatism, chromatic aberration, coma, curvature of field, distortion, and spherical aberration.

Deviation. — Angular departure of rays passing through an optical element from some prescribed ideal or specified path. (See also "Angle of Deviation.")

Dig.—A cavity, usually elongated, in the surface of an optical element from which glass has been removed.

Dirt or Lint.—Foreign material lodged between cemented surfaces, usually due to improper cleaning or foreign material in the cement used.

Dirt Hole.—A pit in a glass surface filled with any foreign material.

Discoloration (as applied to cement).—A darkening of cement due to either age or impurities in the cement. Discoloration causes the cemented optical elements to take on a yellowish cast.

Dispersive Power.—The measure of the refractive-index spread between the F and C Fraunhofer lines when compared with the D line. (See Chapter 2.)

Distortion.—That defect of a lens whereby the images of straight lines appear curved. Any straight line extending across the field, unless it intersects the principal axis, will appear curved, and for different lenses the curvature may be from, or toward, the center. It is caused by different magnification of different parts of the image. (See also "Definition".)

Double Image.—An image reflected to the observer's eye from two surfaces in such manner as to appear as two overlapping images. An extreme case of bad definition. (See also "Definition.")

Durability.—The ability of an evaporated film to stand up well under various tests designed to determine the adherence and wearing quality of the film.

Eccentric.—A condition which occurs when the optical and geometrical axis of an element are not coincident due to faulty centering. This condition is also found in cemented lenses due to faulty centering and/or cementing. (See also "Concentricity.")

Equivalent Focal Length. — See "Focal Length."

Error of Deviation.—See "Angle of Deviation."

False Polish.—See "Poor Polish."

Feather.—The result of fusion of a vented fracture during molding or pressing of glass into blanks. (See also "Inclusion.")

Feathering.—The physical change in cement which causes the cement to lose its transparency and develop a feather-like pattern.

Focal Length.—The distance from the principal focus to either a surface or the optical center of a lens. *Equivalent Focal Length* is the distance from the optical center of a lens to the principal focus. *Back Focal Length* is the distance from the axial point of the back surface of the lens to the principal focus. *Front Focal Length* is the distance from the axial point of the front surface of the lens to the principal focus.

Fold.—A powdered surface folded into the glass in the pressing process. (See also "Inclusion.")

Fracture.—A fissure of breaking of glass from sharp impact or heat strain. (See also "Crack" and "Crack, Fire.")

Front Focal Length.—See "Focal Length."

Geometrical Axis. — The line through the center of a lens (or other circular optical element) determined by measurement. Sometimes referred to as the 'physical' or 'mechanical' axis to distinguish it from the optical axis. (See Figure 1306.) (See also "Concentricity.")

Gouge.—See "Dig."

Gray (or Grayness).—See "Poor Polish."

Image.—An image is the exact optical reproduction of an object. (See also "Definition" and "Resolving Power.")

Inclusion.—Any foreign matter or undissolved glass batch in the body of the glass, thus bubbles, blisters, feathers, folds, seeds, and stones are all inclusions.

Incomplete Polish. — See "Poor Polish." (See Figure 1212.)

Index of Refraction. — See "Refractive Index."

Knock.—An incomplete fracture produced by impact. (See also "Fracture.")

Linear Dimensions.—Linear dimensions include diameter, height, length, thickness, 'volume', and width.

Lint.—See "Dirt or Lint."

Long Focus. — A focal length longer than the specified focal length. This defect is readily detected at the optical lens bench or a comparable fixture. (See also "Focal Length.")

Low-reflection Evaporated Film. — A low-reflection evaporated film is a film applied to an optical element by an evaporation process (see Chapter 19), which has as its purpose the reduction of light reflection to a minimum. It is always applied to the outside faces of optical elements.

Mechanical Axis.—See "Geometrical Axis."

Micrometer Mark. — A circular or partly-circular scratch caused by the application of a micrometer to a polished surface. (See also "Scratch.")

Optical Axis.—That point in a lens at which a light ray passing through will not be bent. (See Figure 1306.) (See also "Concentricity.")

Orange Peel.—A condition that is characterized by elevations on the polished surface resembling the surface of an orange skin.

Out-of-round.—A condition in which a circular element is elliptical to the extent that it exceeds the tolerance for the specified diameter.

Overhang.—In cementing optical elements, the optical and geometric centers of the various elements do not always coincide. Since the optical centers are aligned in the process of cementing, the result is that a portion of the edge of one element overhangs the other.

Oversize.—A measurement over the allowed tolerance of a specified dimension. Specifically denoted as: diameter oversize, width oversize, length oversize, etc. (See also "Linear Dimensions.")

Pinhole.—A pinhole is a minute open area in which either chemically-deposited silver or evaporated film has not adhered to the glass.

Pit.—A small opening in a regular surface caused by an abrasive during the rough- or fine-grinding operation, or by opening a bubble.

Poor Polish.—A term applied to an incompletely polished surface containing minute pits or dirt holes. Poor polish may appear brown, gray, red, or tan, depending on the color of the fine-grinding or polishing abrasive which fills the minute pits in the surface of the glass. 'Gray' and 'short finish' are synonomous terms.

Prismatic Lens.—A lens whose edge thickness is not uniform. No specific check is made for this condition in itself, but the condition is checked under "Linear Dimensions" and "Concentricity."

Pyramidal Error.—A measure of the tendency of the faces of a prism to form pyramid-like figures instead of true figures of the parallelepiped type.

Quality of Lines and Filling.—The quality of etched lines and the material which fills them is determined by the evenness of the lines and the uniformity of the filling material.

Ream.—A fine band or layer of glass of a different refractive index from that of the surrounding glass. (See also "Stria.")

Reflecting Evaporated Film.—A reflecting evaporated film is a film applied to a mirror, by an evaporation process (see Chapter 19), which has as its purpose the maximum reflection of light. It is always applied to the front surface of a mirror.

Refractive Index.—A measure of the change in direction of a light ray as it passes from one medium, such as air, to another, such as glass. Also called "Index of Refraction." (See Figure 212.)

Resolution.—See "Resolving Power."

Resolving Power.—Resolving power is the ability of an optical element to maintain (for the observer) as separate points the images of two points that are close together. The limiting angle of resolution is the smallest angle, between the lines of sight to two points, at

which they can be distinguished as two separate points, *i.e.*, just before they appear to merge into a single point. This angle is commonly used as the measure of the resolving power of the element involved.

Resolving Power of Lens.—See "Resolving Power."

Resolving Power of Prism.—See "Resolving Power."

Ring.—A circular scratch produced by the stick used in the centering operation. It is sometimes referred to as a 'stick mark'. (See also "Stick Mark.")

Rub.—The marred surface of glass caused by contact with glass or other substance, leaving a defect of a white or milky appearance on the surface.

Run-in, Cement.—See "Start, Cement."

Safety Bevel.—See "Bevel."

Sand Hole.—See "Pit."

Scattered.—The term applied to the separation of allowable surface defects and inclusions. Defects of this character must be scattered by a distance at least 20 times the diameter of the largest defect.

Scratch. — A furrow in a glass surface caused by abrasion. Scratches can be seen by reflected light when viewed from the proper angle.

Seed.—A minute bubble less than 0.005-inch diameter. (See also "Inclusion.")

Separation.—A section of the cemented surfaces of a lens or prism cluster where the components have started to separate.

Short Finish.—See "Poor Polish."

Short Focus.—A focal length shorter than the specified focal length. This defect is readily detected at the optical lens bench or a comparable fixture. (See also "Focal Length.")

Size of Bevel.—See "Bevel."

Skim.—Streaks of dense seeds with accompanying small bubbles. (See also "Seed" and Bubble.")

Sleek. — A series of very light scratches. (See also "Scratch.")

Spatter.—A macroscopic particle of a molten salt or a metal which is exploded by the spontaneous production of a gas or a vapor beneath the molten surface, and which adheres or fuses onto the glass surface during the application of an evaporated film. All the causes which can produce a spatter are not known.

Spherical Aberration. — The inexact focus of refracted rays, all rays not coming to a focus at the same point. This defect of a lens is due to its spherical curvature wherein refracted rays from the outer portions will not cut the principal axis at the same points as rays refracted nearer the principal axis. This produces a blurred image. (See also "Definition.")

Stain. — A discoloration (usually brown, blue, or green) of a glass surface caused by a deposit or chemical action, *e.g.*, from polishing rouge.

Start, Cement. — A spot or section at the edge of a lens or prism cluster where the components have started to separate, or a small irregular separation anywhere between the components. Starts are due to cement retraction, insufficient cement, or solvent action on cement at edges. (See also "Separation.")

Stick Mark.—A stick mark is a mark left on the surface of a lens by the wooden stick which is used to center it. (See also "Chuck Mark" and "Scratch.")

Stone. — Any opaque or partially-melted particle, such as sand, embedded in the glass. (See also "Inclusion.")

Strain.—A defect in glass caused by internal stress due to poor annealing, or due to glass not having a uniform coefficient of expansion. Strain can be detected only by examination in polarized light.

Streak.—See "Stria."

Stria (plural, Striae).—A streak of different composition and therefore a different refractive index within the glass mass. This

defect is caused by imperfect mixing of the molten ingredients during manufacture. Striae scatter light, causing fogginess and general loss in definition. Cords, streaks, and veins are also striae.

Stripe.—A very light scratch. (See also "Scratch.")

Surface Curvature.—Surface curvature is the curvature resulting from processing a spherical optical element to a specific radius of curvature.

Talc.—See "Fold" and "Feather."

Thick. — Amount over tolerance. See also "Oversize."

Thin. — Amount under tolerance. See also "Undersize."

Turned-down Edge.—That portion of a polished surface from which more glass has been removed than from the center. A turned-down edge can be detected by the ring pattern seen through a test glass. (See also "Surface Curvature.")

Undersize.—A measurement under the allowed tolerance of a specified dimension. Specifically denoted as: diameter undersize, width undersize, length undersize, etc. (See also "Linear Dimensions.")

Uniformity.—The term 'uniformity' of either chemically-deposited or evaporated coatings denotes the uniformity of color and thickness of the coating.

Vein.—See "Stria."

'Volume'.—The last measurement taken at either the molding, pressing, cutting, grinding, or polishing stage, to determine the size of the piece. (See also "Linear Dimensions.")

Water Mark.—See "Water Spot."

Water Spot.—An outline on a polished surface, probably a slight etching of the glass itself, caused by evaporation of water or other liquid. A water spot is sometimes called a 'water mark'.

Wedging.—See "Prismatic Lens."

Whip. — A surface condition characterized by the appearance of approximately parallel, short, wavy lines on the surface when viewed in reflected light. When tested in monochromatic light on an optical flat the surface with 'whip' shows wriggly fringe lines.

Width of Line. — The width of an etched line, usually on a reticle.

Wrong Glass.—See "Dispersive Power" and "Refractive Index."

Wrong Side (as applied to low-reflection evaporated films).—Since certain surfaces of optical elements which are to be cemented are not coated, any accidental application of film to these surfaces would be considered wrong-side coating.

Wrong-side Bevel.—A bevel on the wrong side. (See also "Bevel.")

VISUAL INSPECTION

Finished optical elements should be inspected carefully for surface defects such as chips, digs, dirt holes, orange peel, pits, poor polish, scratches, stains, and rub, and for internal defects such as cracks, fractures, inclusions, and striae.

This inspection must be extremely rigorous for surfaces which will lie in or near a focal plane in the completed instrument. Surfaces at a greater distance from a focal plane (see Figure 2403) require an inspection that is somewhat less critical. Defects on class 2 surfaces are undesirable because they may cast objectional shadows on the reticle or collective lens.

The general procedure for inspecting finished or semifinished processed polished surfaces is as follows: the element is cleaned carefully, then examined under proper illumination and surroundings with the naked eye, or with the aid of a magnifier; defects are noted and, if judged objectionable, are marked with a wax pencil.

Facilities for Inspecting

Illumination of Room.—The general (overall) illumination of an inspection room, which may be only a small booth, has an important bearing on the ability of an inspector to detect minute defects or flaws. Inspection rooms can be classed as darkened, dimmed, or well-lighted, each condition having its advantages and disadvantages. Most critical inspections should be made in a darkened room where the only light sources are those directly in front of the inspector. Such a condition is more effective because no stray light reaches the element. Stray light, *i.e.*, any light other than the inspection light itself, tends to reduce the effectiveness of the inspection light. Hence any inspection made with general illumination will be less critical than that made with an inspection light alone. The illumination of the element should be adjusted so that the inspector can see any imperfections which constitute a cause for rejection.

Conditions surrounding an inspector also have a bearing on the effectiveness of the work. Walls and other surroundings reflect a considerable amount of light unless covered in such a way that a large portion of any stray light is absorbed. For this reason, a dull paint or black paper is sometimes used to reduce reflected light.

Conditions approximating a darkened room may be obtained by placing the inspector in a small booth with a low-reflecting lining.

Backgrounds.—In addition to the general illumination and the wall conditions, the immediate surroundings at the work place of each inspector should be considered, since undesirable stray light may also be reflected from them. Important among these immediate surroundings are the backgrounds on which an element is placed, or in front of which it is held for inspection. Both horizontal and vertical backgrounds are necessary for some inspections. When inspecting by reflected light, a horizontal background is convenient, while a vertical background is better for transmitted light. These backgrounds may consist of a dull sheet of black paper lying on a bench top, or a board covered with dull paint and placed vertically at the rear of the bench. Care should be taken to eliminate any objects in the background which might distract the inspector's eye.

Illumination of the Element.—There are a number of methods of illuminating elements under inspection, the most common of which are discussed below. It should be remembered that some methods are much more critical than others and, therefore, care should be taken that the method selected is suitable (sufficiently critical, but not too critical) for the particular class of work undergoing inspection.

Elements may be inspected by either reflected or transmitted light. When transmitted light is used, it passes directly through the element to reach the inspector's eye. When

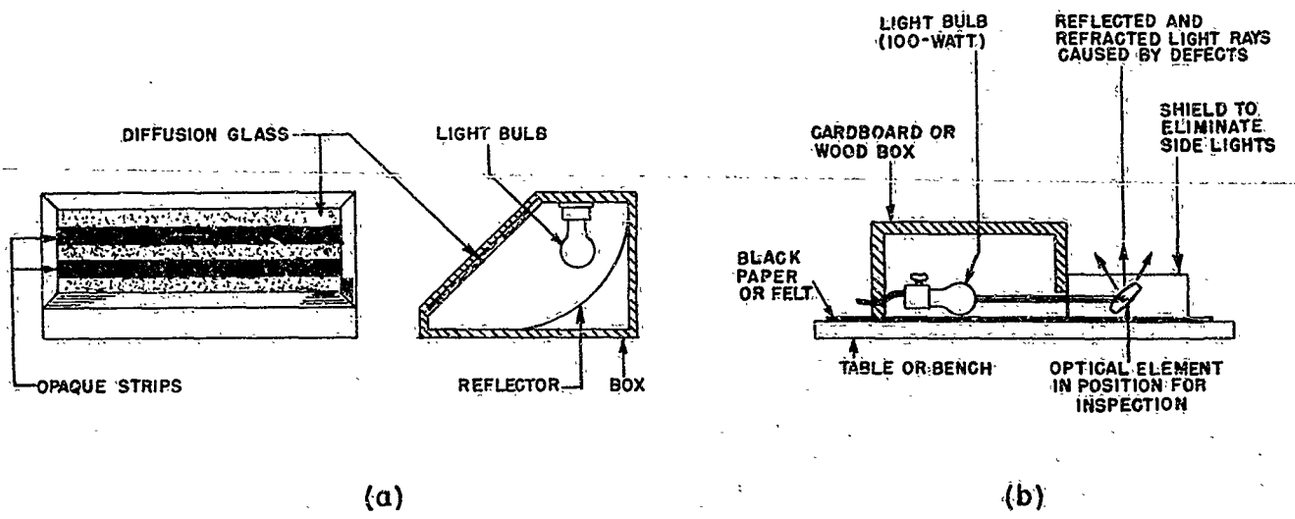

Figure 2402.—Two Types of Inspection Lamps.

TABLE OF TYPICAL INSPECTION CLASSIFICATIONS FOR OPTICAL ELEMENTS

CLASS	ZONING	APPROXIMATE SIZE OF BORDER-LINE DEFECT	MAGNIFICATION	METHOD OF ILLUMINATION
1. Surfaces which lie within ±5 diopters of a focal plane. (*e.g.*, reticles, some collective and field lenses, some prism surfaces)	Divided into a central zone, half the clear aperture in width, which is more critical than the outer zone.	Central zone generally free of any defect detectable at the magnification of the eyepiece. Very light scratches and very small pits sometimes allowed in the outer zone.	Use magnifier equal to or greater in power than that of eyepiece with which element is to be used.	Critical
2. Surfaces which lie within 5 to 15 diopters of a focal plane. (*e.g.*, most collective lenses, center lenses, of eyepieces, and some eye lenses)	As with class 1	Scratches approximately 0.0001 to 0.0005 inch in width. Other surface defects are allowable in proportional dimensions.	Some inspectors use magnifier (not over 3X) to examine for defects which are difficult to pick up.	Semi-critical
3. All surfaces which lie 15 or more diopters out of a focal plane. (*e.g.*, objective lenses, windows, most erecting lenses)	Zoning not necessary.	Scratches approximately 0.001 to 0.002 inch in width. Other surface defects are allowable in proportional dimensions.	Generally inspected without aid of magnifier.	Normal

Figure 2403.

reflected light is used, the light from a source is reflected from the surface being inspected into the inspector's eye.

When an element is inspected in transmitted light, the element is held so that it is on a straight line between the source and the inspector's eye. A bubble, seed, or scratch will appear as a dark spot, since the light which would normally reach the inspector's eye from this area is deflected by the defect.

When inspecting by reflected light, a perfect surface appears illuminated uniformly across its entire surface. Any interruption in the surface, such as a scratch or dig, scatters light, and thus appears either darker or brighter than its surroundings. Reflected light is widely used in the inspection of polished and ground surfaces. Transmitted light is suitable for observing internal defects, such as bubbles and seeds, because it approximates the light under which the element operates in the instrument for which it is designed. With the aid of a magnifier and with sufficient illumination, an inspector can detect a surprisingly-small defect when using transmitted light.

Sunlight would be by far the best illumination for optical inspection if it were possible to obtain a sufficient amount at all times. Since this is obviously impossible, the inspector must depend on artificial illumination either as a supplement to, or a substitute for, sunlight. Three main types of artificial illumination are available and all are used to some extent—light from incandescent lamps, light from fluorescent lamps, and light from microscope lamps. Daylight filters (either external or incorporated in the glass surrounding the lamp) are often used with the first two types. Incandescent and fluorescent light are both used with good results for general inspection purposes, while light from microscope lamps is used in special applications requiring a high degree of intensity.

Incandescent Lamps. — Many types of mountings are used for incandescent lamps. A convenient one, known as the 'black bar' lamp, is shown in Figure 2402(a). The black bar lamp consists of a rectangular box containing a 15- or 20-watt bulb. One face of the box has a ground glass screen crossed with parallel strips of black paper about 1-inch wide and 2-inches apart. The inspector looks directly through the element into the lamp, and by moving the element from a dark zone into a lighted zone he can obtain excellent contrast.

The 'black spot' lamp, a variation of the black bar type described above, is usually an ordinary industrial bench lamp equipped with a polished glass cover over the reflector. An opaque disk, pasted or sandblasted on the cover, shields the bulb, and thus prevents any direct rays from reaching the observer. Inspection is accomplished in the same manner as with the black bar light.

Figure 2402(b) shows another type of incandescent lamp which has no special name. The data on the figure provides both structural and functional detail. In Figure 1721 is shown another type of mounting. In this light, it will be noted, a magnifying eyepiece is held in a fixed position for examination of the element.

Fluorescent Lamps.—This type of lighting is becoming increasingly popular. The most common forms are floor or ceiling-suspended fixtures, and bench lamps. The former types are generally about 2 feet above the level of the inspector's eyes, bench models being at or below this level.

Microscope Lamps.—This type of lamp is similar to that used to illuminate microscope slides where a type of lamp is required that will project a spot of light through a condenser system. Since the light can be controlled or concentrated at any point desired, it is used when a powerful light source for a critical inspection is required. Inspection is made either with the rays reflecting from a surface or with cross illumination of the element. As a rule, microscope lamps are reserved for extremely critical inspection and are generally used in darkened or semi-darkened rooms. They are seldom used when transmitted light is required.

Standardization of Defects

Surface defects in an optical element have varying effects on the performance of an optical system of which the element in question forms a part. These effects depend not only on the place and importance of the element in the system, but also on the character and location of the defect on the surface of the element. Many attempts have been made to prepare graded standards for pits, scratches, and other surface defects, so as to provide the inspector with standard samples for comparison with defects on actual elements.

The optical engineer who designs an instrument must know the effect of various defects on the instrument's performance, and must draw his plans and specifications in such a way that the inspector, who will not have the same technical knowledge, can decide with reasonable precision and uniformity whether a particular element will be satisfactory.

It is to assist both the engineer and the inspector in their work that some manufacturers have developed graded standards of various defects of elements, in order to require the inspector to exercise as little judgment as possible in deciding whether or not a particular defect will affect the operation of an instrument, and to allow him to concentrate fully on deciding if it is greater or less than a sample of a similar defect which is also before him.

Determining Classes of Surface Defects.—Figure 2403 shows a convenient arrangement for separating optical elements so that their surface defects fall into three standard groups for inspection. As will be noted from an examination of this figure, surface defects are divided into three classes that are determined by the proximity of the element in question to an applicable focal plane in the optical system of which it forms a part. It will also be noted that class 1 is the most critical group, and that classes 2 and 3 are progressively less critical.

An experimental method of testing for optical proximity of a lens or surface to a focal plane, *e.g.*, a reticle of an optical instrument, is described in the following paragraph.

Marks are placed on the surface to be tested. (A rouge pencil is very satisfactory for this purpose.) The marked element is then placed in its proper position in the instrument. The eyepiece of the instrument is set at zero by bringing the reticle into sharp focus with the aid of an auxiliary collimating telescope set for infinity. Then, using a set of diopter lenses ranging from +5 to −5 diopters in steps of 1 diopter, or of a variable-focussing dioptometer, the surface is carefully examined. If the marks on the surface in question are clearly visible, the surface lies within ±5 diopters of the focal plane. This operation is accomplished

by interposing the diopter lenses between the eyepiece of the instrument and the eye of the observer. The diopter lens, which brings the marks on the surface in question into sharp focus, gives the quantitative value of the optical proximity of the surface in question to the focal plane of the instrument. Satisfactory observation can be made either by looking at a bright landscape, or a brightly-illuminated sky, or into a collimator provided with suitable lighting.

Any defects on the surfaces of elements within ±5 diopters of a focal plane are on class 1 surfaces and may, therefore, be referred to as class 1 defects, as indicated in Figure 2403. Defects in classes 2 and 3 may be similarly determined, by substituting a dioptometer of suitable range, or else by substituting diopter lenses of 5 to 15 diopters, or of over 15 diopters respectively. Where elements are designed for use in instruments having more than one focal plane, classification is determined in the same fashion by reference to the focal plane applicable to the specific element.

Determining Allowable Sizes of Surface Defects.—The column entitled "Approximate Size of Border-line Defect," in Figure 2403, is included in this manual for purposes of clarification and comparison only, and is not to be interpreted as setting up an absolute standard for allowable size of surface defects.

The adoption of a system of sizing allowable defects for inspection purposes, would naturally necessitate the setting up of standards to cover all surface defects noted in Figure 2401. Such a set of standards would necessarily be worked out by the engineering staff of the manufacturer of optical elements involved, and might be based upon experience or upon a relevant principle, such as the measurement of beam diameter, as noted below under the "Eastman Kodak Method." Once worked out, the actual allowable sizes can be utilized by the inspector either directly as embodied in a tolerance chart, or indirectly as embodied in sets of samples with which comparison of the optical element can then be made. Two methods of providing samples for comparison are noted below. It may also be added that present practice at Frankford Arsenal is to provide a set of samples with defects sized according to both classes and zones, as indicated in Figure 2403. These defects are arranged for direct comparison, and include both those which are just within tolerance, and those which just exceed tolerance in the various classes and zones of optical elements.

Minneapolis-Honeywell Method.—This system of measuring maximum defects such as scratches, pits, bubbles, etc. is used by Minneapolis-Honeywell Regulator Company, and is said to be a help in providing a constant standard of quality to guide the inspector.

The inspector is provided with a standard sheet for each element to be inspected. This sheet shows the maximum size and quantity of the various types of defects that are allowable. In most cases, the element is divided into areas, consisting of a central zone, designated as A, outer zones, called B and C, and an outside zone or rim area. In many cases, the quantity and size of allowable defects are different in the different zones.

Each inspector is furnished with a standard box made of sheet metal with four 7-watt, 110-volt bulbs for illumination, see Figure 2404. The front of the box is covered with opal glass over which is placed the 'scratch standard film'. The left section contains a drawing of the element with the zones indicated in full scale.

On the standard film are twenty-two scratches, ranging from 0.0005 to 0.020 inch in width, and numbered from 1 to 22. Number 1 is 0.0005 inch; number 2, 0.001 inch; number 3, 0.0015 inch; number 4, 0.002 inch. From number 4 through number 22 the width of the scratches progresses by intervals of 0.001 inch. Because these films are printed photographically from a master negative, the width of scratch lines may vary slightly.

In questionable cases, the inspector places the optical element on the film, and thus determines if the defect in question is larger than the maximum tolerance for a like defect as indicated on the standard sheet.

Eastman Kodak Method.—Eastman Kodak Company has developed a system of graded standards. It consists of a case with several glass disks which are visible through the sides

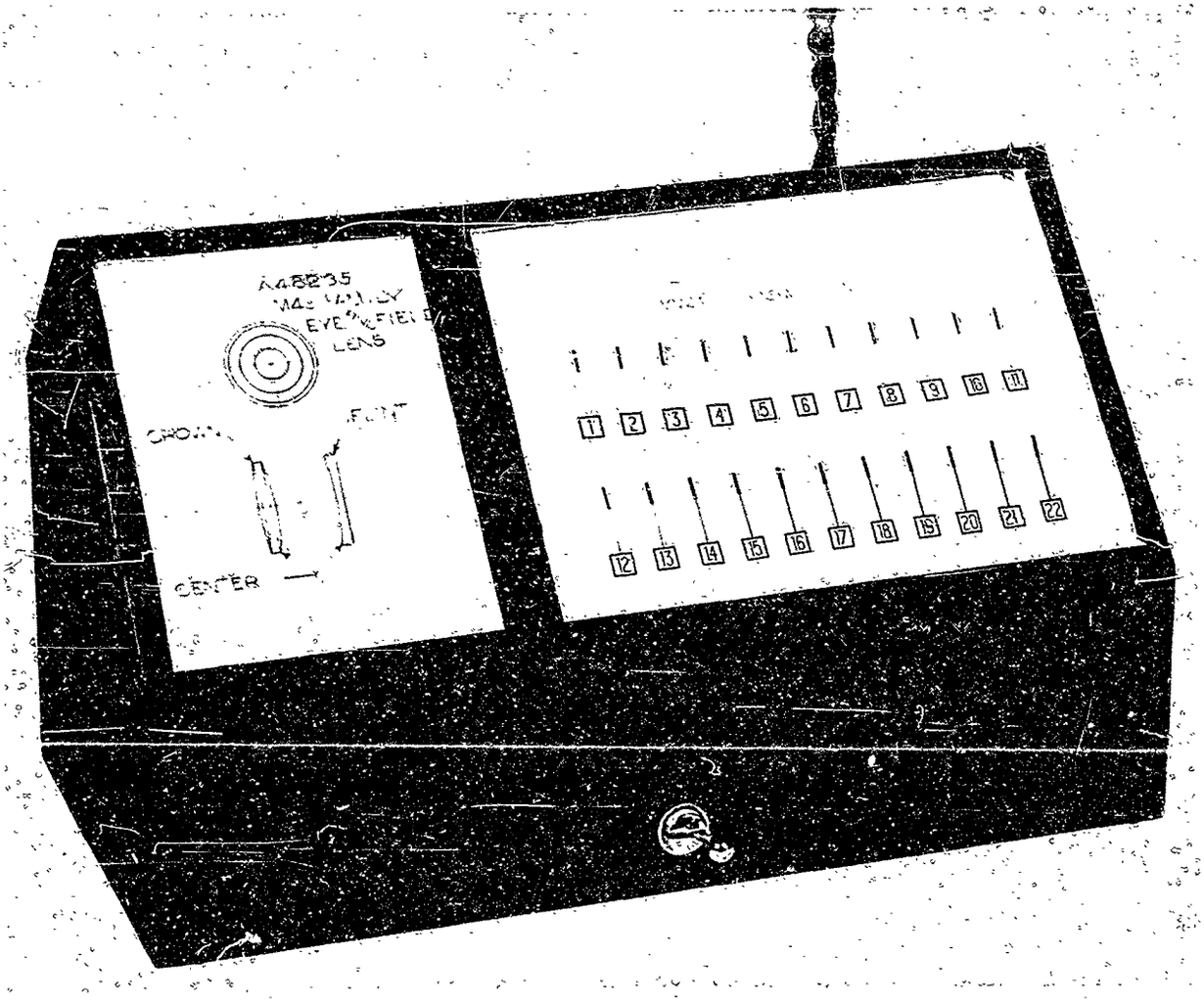

Minneapolis-Honeywell Regulator Company

Figure 2404.—Visual Standards Box Used in Inspection of Surface Defects.

of the case. On each of the disks is an accurately-made scratch or dig. Each of these defects is numbered and these numbers are used in specifying the allowable defect size. Defects in elements under inspection are compared directly with the carefully-sized defects in the standard case.

The tolerances as to the allowable size of defects in various zones of the element are arrived at by calculation of the diameter of the beam passing through the optical system. The diameter of the actual beam is used to determine allowable sizes for defects in the center of the element, and the oblique beam diameter is used to determine the allowable size of defects in the outer zone. (These calculations are, of necessity, an engineering problem which must be solved by a qualified engineer.)

Methods of Checking Inspection.—In the absence of a standard system for measuring surface defects, such as those described above, a fairly-efficient means of 'calibrating' or securing uniformity among inspectors is to have a percentage of each inspector's work checked by a supervisor. This may be done in a number of fashions.

In one method the inspector divides the work into three groups—elements definitely accepted, elements definitely rejected, and elements about which there is some doubt. The supervisor then inspects this last group.

In another method the elements that are rejected by an inspector are re-inspected by a supervisor. This might also be applied to those elements accepted, but it is usually applied to the rejected elements only.

In still another method the supervisor re-inspects an entire lot that has previously been inspected by the inspector.

The above methods are sometimes used even in organizations which have efficient surface-defect standard systems, both for routine checks of inspector efficiency, and when deemed advisable due to a sudden large increase or decrease in rejections.

Process inspection is sometimes split up and placed under the direction of the foreman of the section performing a single operation, such as polishing, but in general, both process and final inspection should be placed under a single chief inspector who reports directly to the manager of the plant. It is of utmost importance that daily inspection reports be furnished to the heads of the various sections, such as the grinding room and the polishing room, in order that these men may have prompt warning of anything which may have gone wrong in the process so that they can take steps to eliminate the cause before more damage is done.

Special Inspection Methods

Evaporated Film Coatings. *Low-reflection Films.*—In addition to the inspection of the actual coating for color, durability, pinholes, scratches, spatters, stains, uniformity, and wrong side, the elements themselves are inspected for any of the usual flaws and defects which may have been missed by the inspection before coating, or which may have developed since that inspection. The procedure and inspection conditions are the same for inspecting the elements for defects as for polished, centered lenses before coating.

Reflected monochromatic light is used in inspecting the thickness of the coating. The light source can be an ordinary daylight fluorescent light mounted in the customary bench-type reflector. The element is held against a black background in such a way that the light is reflected from the outer surface of the coating, *i.e.*, the surface that is *not* next to the element. As a guide, or standard, by which the inspector can determine the thickness and uniformity of the coating and hence whether or not it is satisfactory, he is provided with a set of standard samples, the thickness of the coating on each of which is known. The glass that is used in the elements making up the set of standard samples should have the same index of refraction as that of the elements being tested. These samples are mounted in a convenient frame or box in the order of increasing thickness, with each element marked plainly with the thickness of its coating. In the actual inspection operation, the inspector holds the element being inspected beside the frame containing the sample in such a way that light is reflected from both the element and the sample and enters the eye simultaneously. In this way, it is comparatively easy for the inspector to compare the color of the light that is reflected from each and thus to determine the thickness of the coating.

The hardness of a coating is determined by rubbing it in a standard manner and then studying the effect that this rubbing has had on the coating. A convenient method of rubbing a low-reflection film consists of giving the same spot of the coating a specified number of strokes with an eraser which is under a constant pressure at all times. This pressure can be obtained by mounting the eraser in a small hollow tube from the end of which the eraser projects. The amount of this projection is governed by a spring in the tube which presses against the eraser. In using the eraser, the operator takes care that a certain amount of it projects from the tube, thus making sure that there is a uniform pressure being exerted on the coating. After the coating has been abraded by the eraser, its condition is observed.

In inspecting the coating for hardness, reflected light is used and the surface of the coating next the element is examined, *i.e.*, the light rays should pass through the element, reflect on the surface of the coating where it has been injured, and then travel back through the element to the eye of the observer. This is a form of 'dark-field' illumination, because

the only light that will reach the eye of the observer will be that reflected by the abrasions, as the light that strikes any uninjured portion of the surface will pass through the coating and hence will not be reflected. This gives the effect of making the uninjured portions of the coating appear dark or unilluminated. It is best to move the element that is under inspection somewhat to insure that all the scratches will be seen by the inspector. If the surface has not been affected, or contains not more than a certain number of hair-line scratches, the coating is described as 'hard' and is satisfactory. If there are more than the allowable number of hair-line scratches, the coating is described as 'semi-hard', and if the coating has been removed by the rubbing, it is classed as 'soft'. Semi-hard and soft coatings are not satisfactory. 'Spatters', which take the form of crystal-like particles that are partly imbedded in the surface of the glass are usually seen quite easily. Such a defect will be thicker than the surrounding coating, and can be identified by scraping with a pick.

Reflecting Films. — Reflecting films are inspected for adherence, pinholes, spatters, scratches, and stains. In addition, the glass is given the usual visual inspection for any flaws or defects which may have been missed in the inspection of the mirror in the blank stage, or which may have developed since that inspection.

The adherence test is made by placing a piece of transparent cellulose tape over a portion of the surface, then pulling off the tape. If the coating is not damaged by this test it is considered satisfactory.

Pinholes in the coating are inspected by using transmitted light, while scratches, spatters, and stains are inspected by reflected light. The method is the same as described under "Facilities for Inspecting" above. Spatters can also be identified by scraping with a pick.

Chemically Silvered Surfaces. — Chemically-deposited silvered surfaces are inspected to determine the quality of the silver coating and of the surface of the glass on which the silver has been deposited. The silvering is inspected for pinholes, scratches, and stains; while the glass is inspected for cracks, fractures, inclusions, striae, and surface defects.

The usual light source consists of an ordinary bench light reflector equipped with two 15-watt daylight fluorescent tubes. A magnifier is seldom used in the inspection of silvering.

The silvered surface is inspected by using reflected light and a bright field, *i.e.*, the rays from the inspection light are allowed to reflect from the silver surface and enter the eye of the observer, who is then able to see the reflection of the fluorescent tubes. Under these conditions, a stain will appear as an area somewhat darker than its surroundings because it will not reflect as readily. Pinholes and scratches will also appear dark.

On the other hand, defects in the glass are seen more easily by using a dark field. This is obtained by adjusting the reflecting surface so that the direct rays from the inspection lamp do not enter the eyes of the observer and hence the surface will appear dark. Under these conditions, scratches and pits will show somewhat brighter than their surroundings, because they will tend to scatter the light so that some of it will enter the eye. Some defects in the glass surface, such as poor polish and small cracks, can be seen more easily after the silver coating has been applied.

Filters.—In inspecting a filter, it is important to keep in mind the part it plays in the performance of the optical system of which it is a part. That is, its sole function is to filter out particular wave lengths, or groups of wave lengths, of the light passing through the system and, at the same time, not to distort or affect those wave lengths with which it is not expected to interfere. From this, it will be seen quite readily that the inspection of a filter can be divided into two parts, one of which is concerned with its actual filtering properties and the other with its physical and optical characteristics. The simplest way for determining its filtering characteristics is to compare it directly with a filter which has the desired properties. This reference filter may consist of a series of graded samples which demonstrate successive steps of filter performance.

In inspecting for physical and optical characteristics, the operator can use the same methods that are used for any element and which are discussed in other parts of this chapter. In general, he should look for pits, scratches, and stains. In addition, he should check for parallelism of the two surfaces of the filter. Any lack of parallelism would cause the rays passing through the filter to deviate.

Reticles.—Reticles require the most critical visual inspection of any element. Such an inspection is necessary because the reticle, when in an instrument, lies in the focal plane of the eyepiece. Being in the focal plane, any defect or flaw on or within the surface of the glass is magnified according to the power of the eyepiece.

Reticles must be clean before a satisfactory inspection is possible. Consequently, any foreign matter that may remain after the cleaning process should be removed by the inspector. While awaiting inspection, the reticles can be placed in pans spaced on sheets of clean paper and covered with alcohol. This will reduce the possibility of damage or of contamination. When ready to inspect, the reticle is removed from the pan and dried carefully with cheesecloth. If rouge or any such matter remains on the reticle, it can be held in the alcohol and swabbed with cotton.

It has been found that reticles can be inspected efficiently when both natural and artificial light are used.

The bench, which should have a dark background extending upwards to about eye level at the rear, is placed in front of a window. In addition to light from the window, there is a bench light equipped with daylight fluorescent tubes suspended at eye level. When an element is being inspected, it is held immediately in front of, and a little below, the lamp reflector. In this way, it can receive both artificial and natural light. The element is inspected by both transmitted and reflected light against the dark background with the aid of a magnifier with the same or greater power than the eyepiece of the system with which the reticle is to be used. It is often helpful to rotate the element in the hands in order to reveal imperfections more easily.

A pick is sometimes used to determine the nature of a defect, *e.g.*, whether it is a pit, dig, bubble, etc., or just simply dirt. The pick shown on the bench in Figure 2405 consists of a thin pin ground to a fine point and mounted in a suitable handle. A defect in which the point of the pick can be placed is usually either a dig, dirt hole, or pit.

Most of the causes for rejecting these elements are bubbles, chips, digs, fractures, pits, poor polish, scratches, stains, and striae.

Visual inspection of reticles should be performed not only before etching, *i.e.*, on blank reticles, but also after etching and filling in the lines. (See also "Toolmaker's Microscope" at the end of this chapter.)

MECHANICAL INSPECTION EQUIPMENT

The material contained in this section is sufficient to enable the reader to identify the instruments described, and in most cases to judge the suitability of a particular device for a specific application. As an aid in making such a determination, the accuracy of the indication of an instrument is discussed, wherever possible. It must be remembered, however, that the precision of any instrument depends not only upon the theory upon which it is based, but also on its design and the care and workmanship that enters into its construction.

Those intending to use one of these instruments, should first study the maker's catalog, and any instruction manual supplied with the instrument.

Linear Dimensions

Micrometers and Depth Gages.—Complete descriptions of these instruments and instructions for their use may be found in catalogs and textbooks. Both are used widely in checking linear dimensions in optical work.

Two uses for a micrometer are discussed in Chapter 4, *Rough Grinding Prisms by Hand*, and illustrated in Figures 411 and 435. A depth gage and its use is discussed in Chapter 21, *Cementing Flatwork*, and illustrated in Figure 2109.

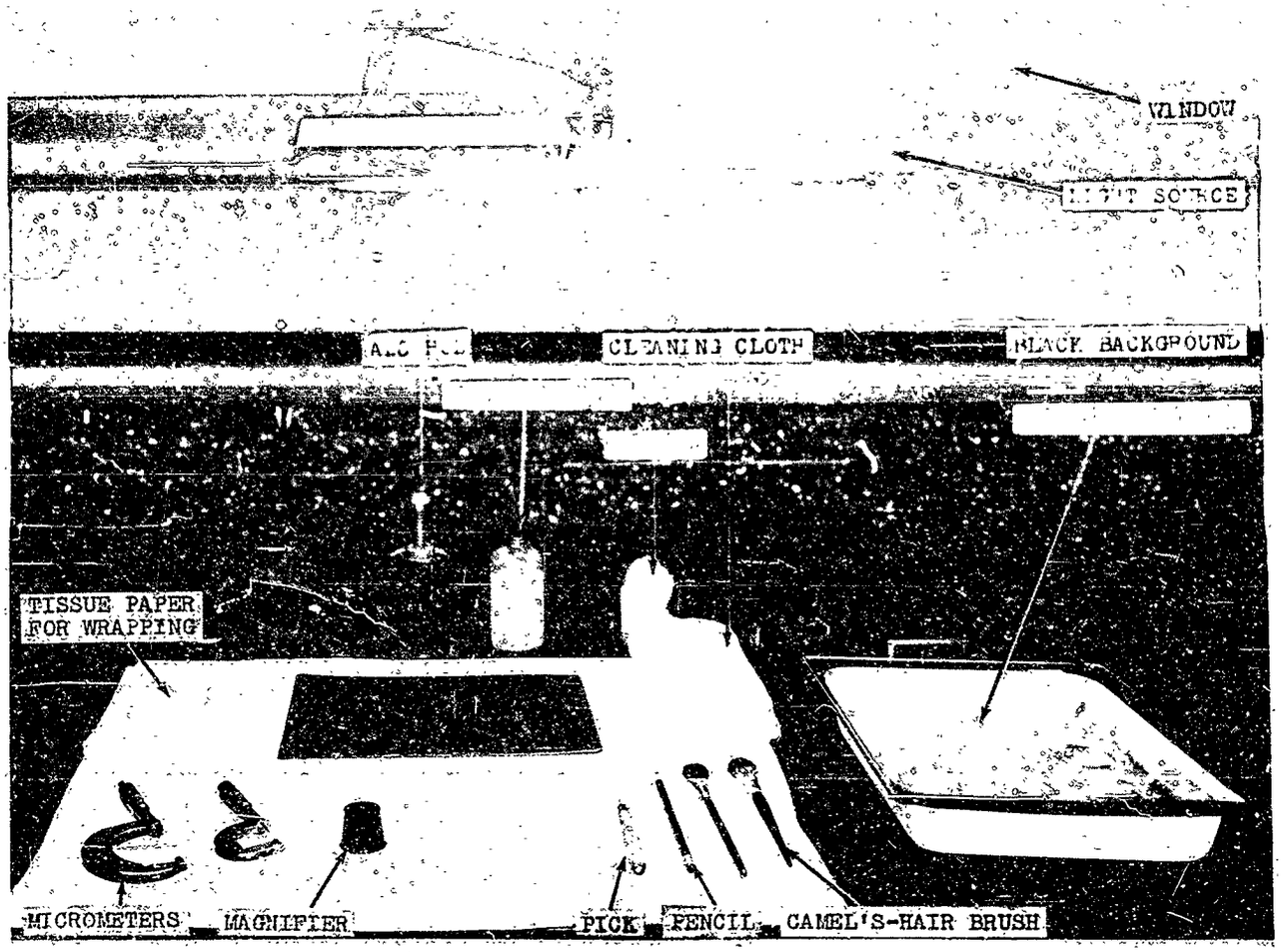

Figure 2405.—Equipment Used to Inspect Elements Such as Reticles.

Go—No-Go Gages.—These gages provide an easy and rapid means of determining whether specific dimensions, such as diameter, height, length, thickness, 'volume', and width are within the desired tolerances. They are sturdy in construction, seldom have any moving parts, and have two openings, usually side by side, in the same piece. The difference in the dimensions of the openings are such that pieces within the required tolerances can be passed through one opening and not the other. The accuracy at the limiting dimensions is comparable to that of the micrometer. One type of go—no-go gage is shown in Figure 607 and is used for checking the diameter of elements.

Dial Gage.—The dial gage is an instrument which multiples the motion of a plunger rod by a system of gears, so that a small movement of the plunger rod of, *e.g.*, 0.001 inch, is seen as a movement of $\frac{1}{16}$ to $\frac{1}{8}$ inch of a pointer on a dial. The dial is divided into spaces equivalent to a movement of the plunger rod of 0.001 or 0.0001 inch. The accuracy is generally considered to be equal to the smallest division of the dial. Probably the most important function of the dial gage is to show variations which occur in a series of measurements. Such a series of measurements may be made in different positions on a surface to check wedge angle, or they may be made on a number of pieces, *i.e.*, to measure how a number of pieces vary in thickness. In actual use, the dial gage is generally used with a fixture designed to hold it in position, and arranged to accommodate the piece to be measured. The tip of the plunger rod must be such that it will make a point of contact on the surface being measured.

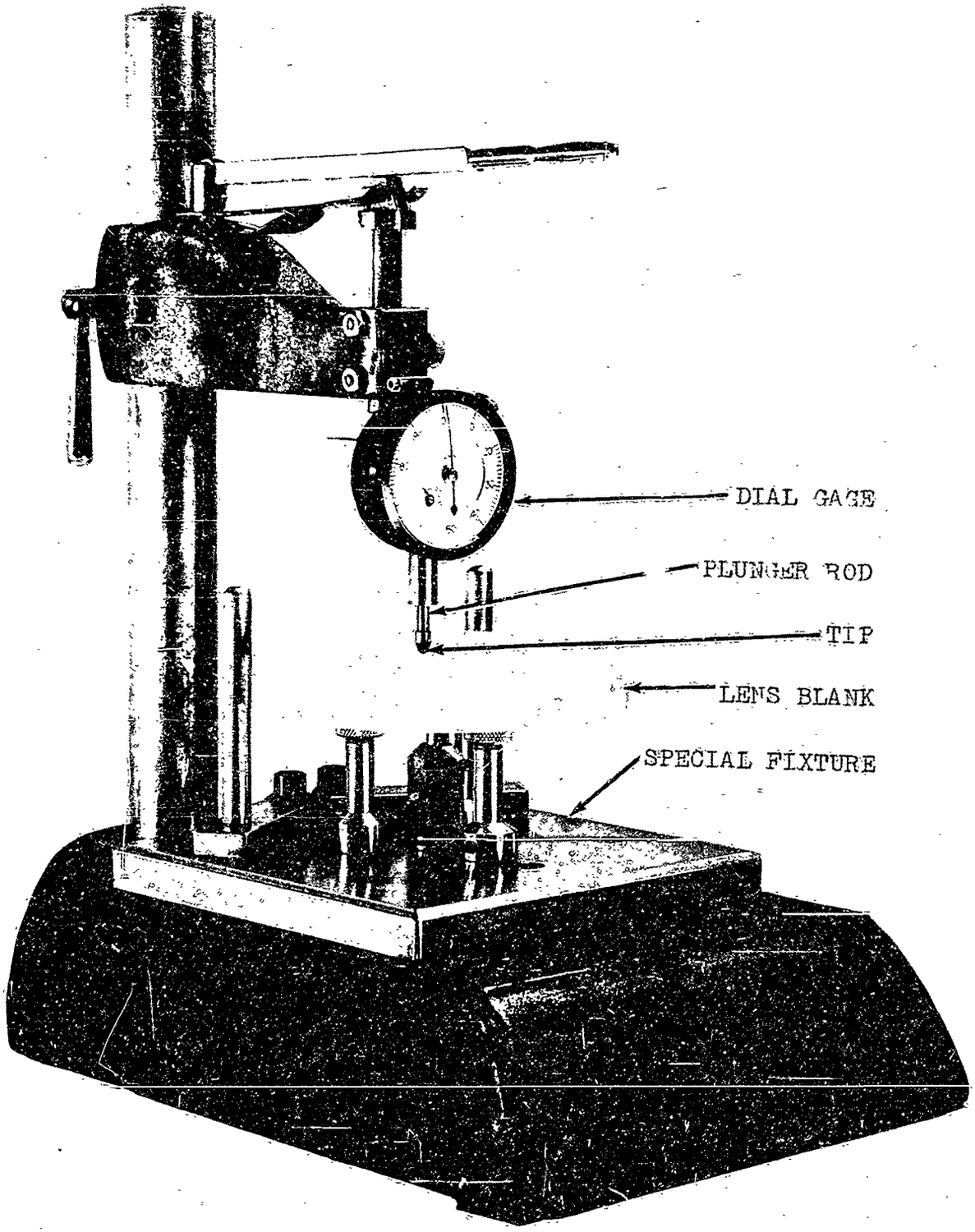

Eastman Kodak Company

Figure 2406.—Instrument Having a Dial Gage for Measuring the Center Thickness of a Lens Blank or a Lens.

Some typical applications are described later in this chapter.

Fixtures for Mounting Dial Gages.—Probably the most common fixture for mounting a dial gage that is used for linear measurements is a flat table-like base, having an upright support on which the gage may be moved and fastened at any desired height. Two such 'table micrometers' are shown in Figure 703. The position of the gage is set and the dial is adjusted to zero when the plunger of the gage is in contact with a reference surface, *i.e.*, either the surface of the table or of a standard block of known height. With the aid of standard blocks, the range of a particular gage may be increased to any desired amount within the limits of the supporting fixture. Other types of fixtures are shown in Figures 2406 and 2407.

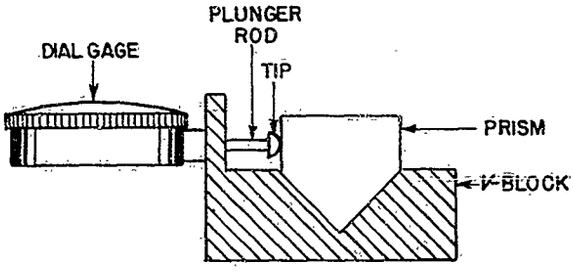

Figure 2407.—V-block Fixture Used to Check the Centering of the Roof of a Prism.

Another common fixture that is used for linear measurements is the hand dial gage, sometimes called a 'snap gage', see Figure 2408. Just as with a micrometer, an anvil is the reference point for the instrument. Since this is a hand gage it is advisable that the hands be free of water and abrasive when it is being used.

Angle Blocks for Use with Dial Gages.—The measurement of certain prism dimensions is simplified by mounting the prism in an angle block. Such blocks can, therefore, be classed as inspection tools. These blocks are used to hold the work in a particular position for measuring, and hence care must be taken in their design and use to insure that the indication of the dial gage will give a suitable measure of the desired dimension. It is often convenient

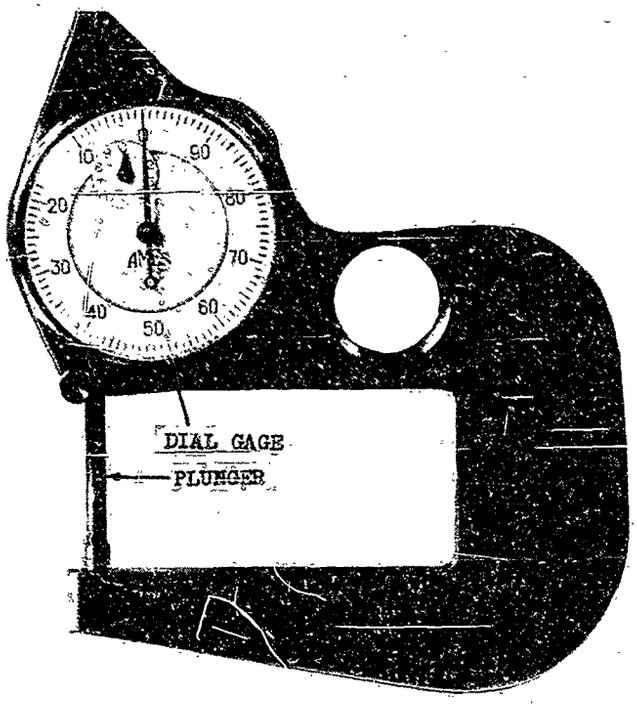

Figure 2408.—Hand Dial, or Snap Gage.

to place a master piece in the angle blocks, set the dial gage against it, and adjust it to read zero while in this position. Examples of such applications are shown in Figures 2407, 2409, and 2410.

In some stages of processing, prisms are mounted in angle blocks as illustrated in Figures 409 and 412, and frequently are gaged without demounting. These blocks and the methods of gaging that are used are discussed in Chapter 4. Here again, the blocks can be classed as inspection tools.

Surface Curvature

Dial-gage Ring Spherometer.—A dial-gage ring spherometer is frequently used to check the curvature of a spherical surface. A threaded boss is provided around the plunger of the dial gage to hold any one of a series of accurately-machined steel rings, see Figures 708 and 2411. The normal function of this instrument is to show any difference between the curvature of a reference surface and the surface being tested; hence it is usually set to read zero when in contact with a master or reference surface.

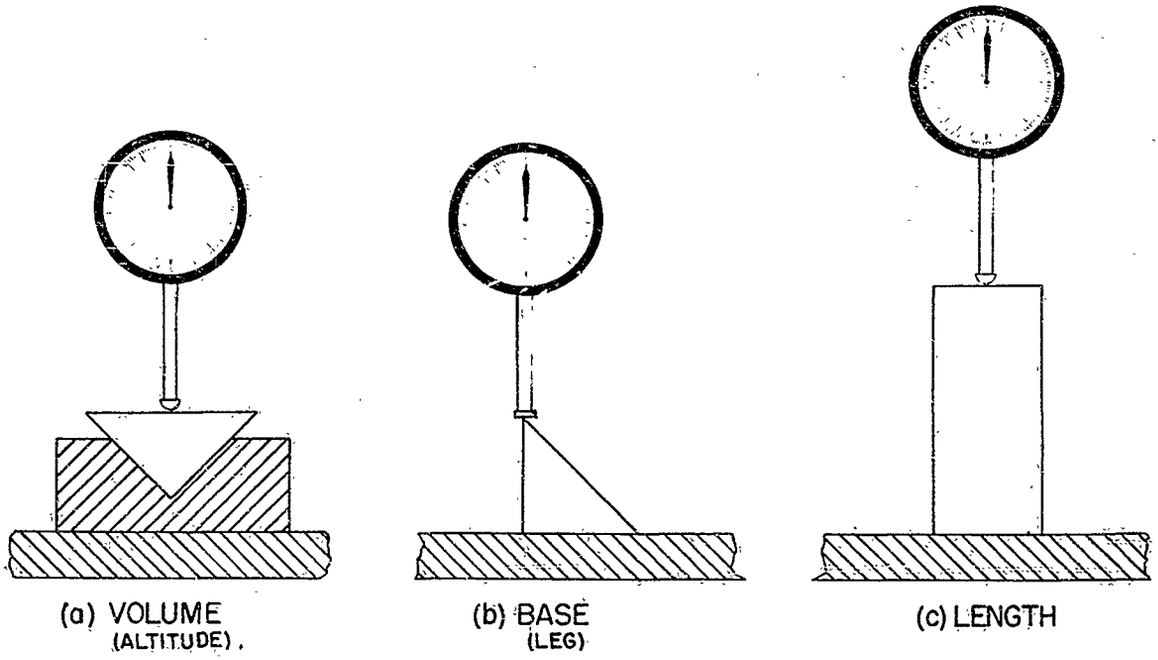

Figure 2409.—Methods in Which a Dial Gage is Employed to Obtain Various Linear Measurements of a Prism.

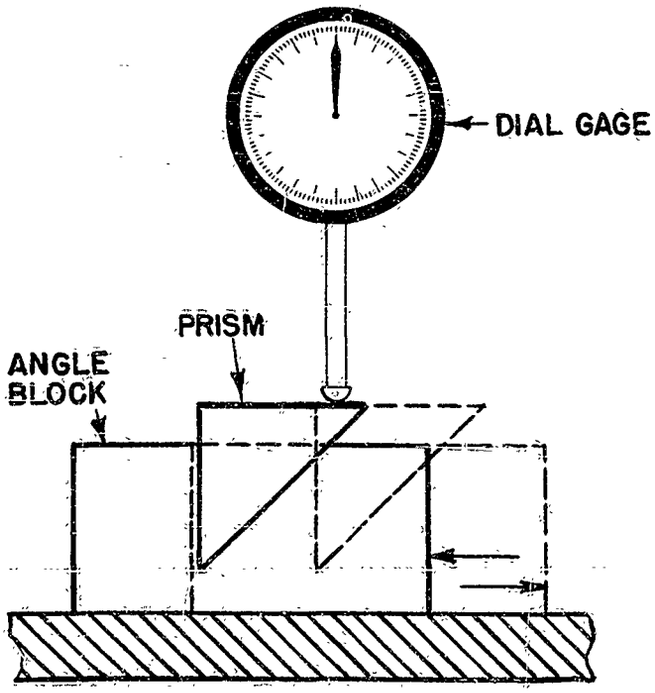

Figure 2410.—Angle-block Fixture Used to Check Prism Angles.

Gages having calibrations as small as 0.0001 inch and which have a limited positive or negative range are most satisfactory for optical work.

While these gages are accurate to the smallest graduation, their overall accuracy depends upon factors such as regularity and cleanliness of the surface, and the care with which the gage is applied. In general, they are much simpler to use than a template and are preferred when relatively unskilled labor is being employed. The accuracy of any gage and especially one that is highly sensitive is affected by the presence of foreign matter, such as water or abrasives. To reduce the possibility of such material entering the gage, it should be mounted horizontally on an upright support that is attached to a heavy base. The operator can then place the spherical surface against the ring without touching the gage.

Dial-gage ring spherometers are used widely while grinding lenses to check the progress of the work. (See Chapter 7 under "Grinding Convex Surfaces.") Another form of spherometer employing the same principles is shown in Figure 2412.

Laboratory-type Spherometer.—This type of instrument is used by the inspector but seldom, and then only to check master lenses and test glasses during grinding. They are never used in the shop under commercial production

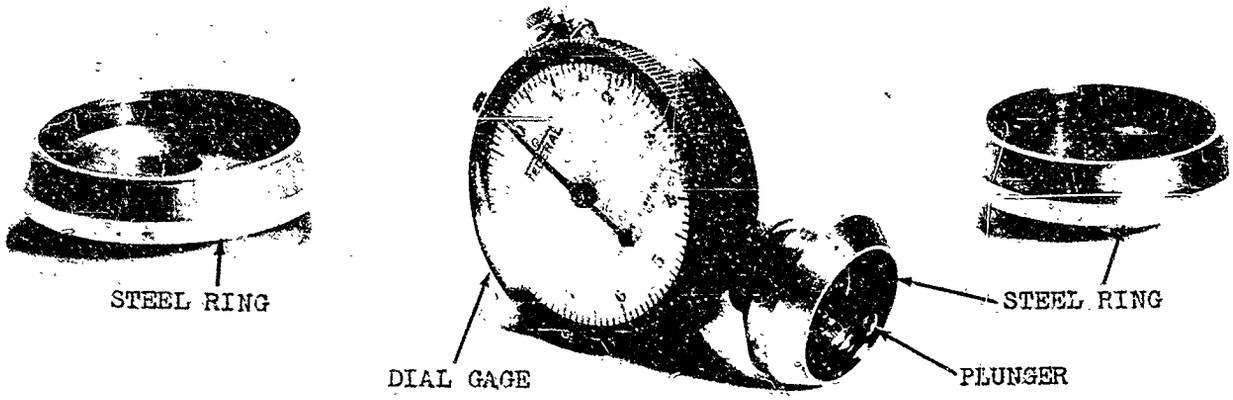

Figure 2411.—Dial-gage Ring Spherometer.

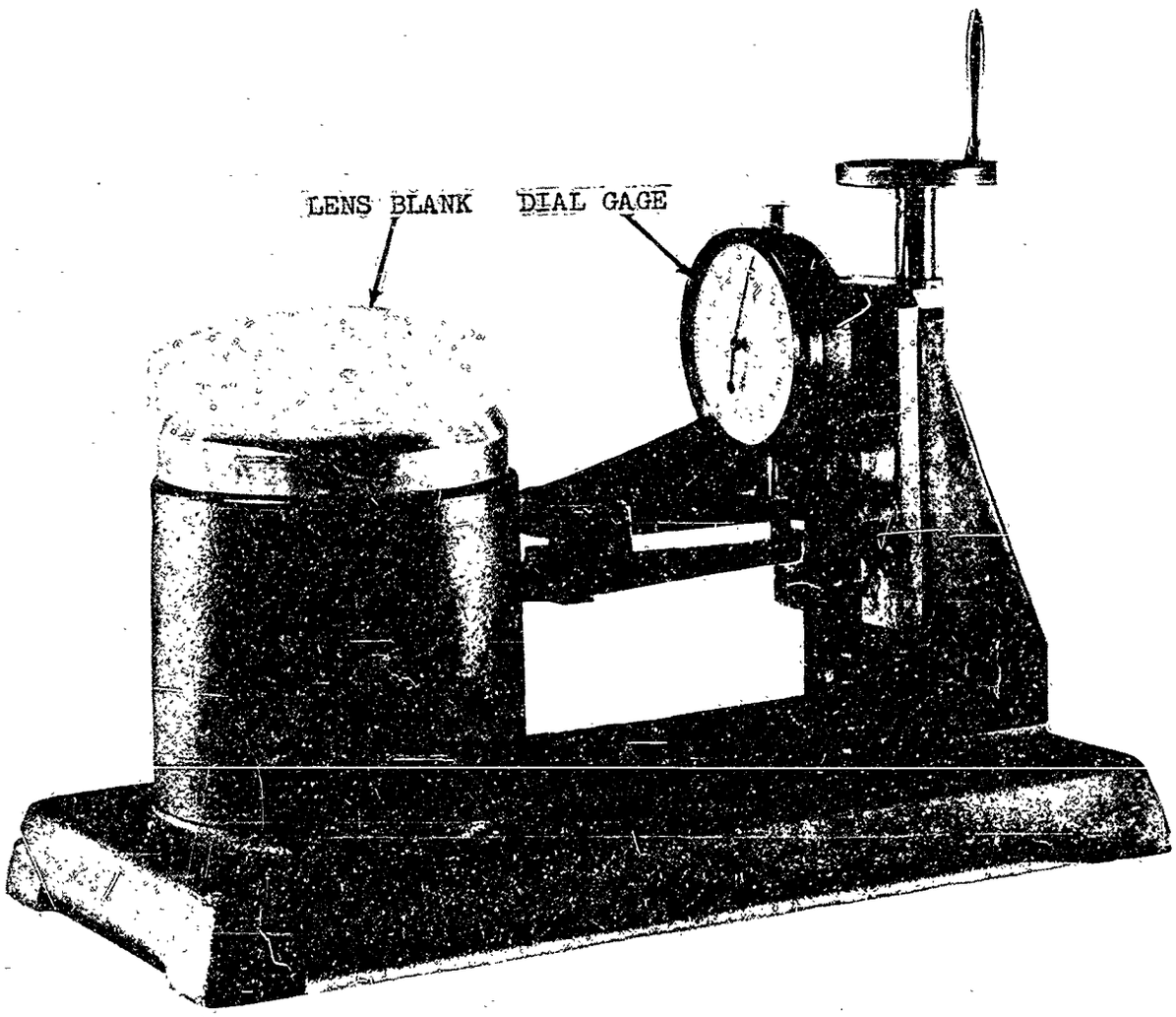

Eastman Kodak Company

Figure 2412.—Dial-gage Type Spherometer.

conditions. For a detailed description of the scope and accuracy of this type of instrument see Chapter 22.

Radius Gage (Template). — Templates of brass or steel, commonly called radius gages in the optical industry, are used for checking ground lenses and lens-grinding tools. A concave gage is used on convex work. In use, such a radius gage is fitted over the surface to be tested and the 'fit' of the gage on the surface is observed by looking toward a light. By this method, an opening of as little as 0.0002 inch between the gage and the surface can be consistently detected by the unaided eye. In using convex gages, which must be done when the surface is concave, the operator must depend on 'feeling' how closely the gage fits the work since transmitted light cannot be used and, consequently, the accuracy is much less than with concave gages. Radius gages may be procured in sets with their radii varying in steps of 0.01 inch. Most large optical shops have at least one such set. However, the general practice is to make up gages of the required radius for a given job.

The use of radius gages is thoroughly discussed in Chapters 7 and 8, *Rough Grinding Lenses by Hand* and *Rough Grinding Lenses with Automatic Machinery*. These gages may be seen by referring to Figures 703, 704, and 709.

Straightedge. — Straightedges are used to check plane surfaces, such as blocks or ground prism blanks, blocking plates, and flat rough- and fine-grinding tools. They embody exactly the same principle as templates or radius gages, described above, and are capable of equal or greater accuracy.

Two types are in general use. The first is the common ruler form made with or without a beveled edge. The second is made in the form of a bar, which resists wear better and has a much longer life.

Straightedges are commonly made of hardened steel, but a few glass straightedges have been made and have proved satisfactory. The application of a straightedge is discussed in Chapter 4, *Rough Grinding Prisms by Hand*. The checking of a blocking plate with a straightedge is shown in Figure 414.

Angle Dimensions

Steel Square. — Steel squares, also called try squares (see Figure 1501), are used extensively for checking 90° angles during grinding when accuracy requirements permit. These gages wear much more quickly than bar gages and are seldom as accurate, but they are considerably cheaper.

Bar Gage.—Bar gages (see Figure 1501) are used as production-inspection tools for checking prism angles during fine grinding. They are made of hardened steel in such a way that the bar segment may be rotated as it wears. These gages are made for the more commonly-used angles, such as 90, 60, and 45°. While their accuracy is somewhat dependent on the skill of the user, with a little training they can be read with suprising accuracy, *e.g.*, a prism 1½ inches long can be measured to within 20 seconds. If these gages are to be used for very accurate work, they must be checked frequently against a master, such as a prism, to detect wear and consequent inaccuracy.

Applications of a bar gage are discussed in Chapters 4 and 15.

Adjustable Bar Gage.—This gage is similar to the bar gage mentioned above except that it is possible to set it to any desired angle. This gage has no scale and, therefore, it is necessary to set it to a master known to have the desired angle. A properly-adjusted bar gage will have approximately the same accuracy as a fixed bar gage.

Bevel Protractor.—The bevel protractor, see Figure 1501, is often used to check the angle between two plane surfaces. It is convenient for checking the angles of prisms after grinding, see Chapters 4 and 15, and when cementing ocular prisms, see Chapter 21.

Fixtures Including Dial Gages.—Fixtures used for angular measurements are similar to those used for linear measurements. A common type is shown in Figures 2410 and 2413. It consists of a fixture having a table-like base similar to that discussed under linear measurements, and an angle block for positioning the prism. The angle is checked by moving the angle block and prism as a unit under the dial gage. Cleanliness of the contacting surfaces

of the table, angle block, and prism is essential for accuracy. A truly accurate angle should show no variation on the dial gage.

With the aid of special fixtures, dial gages can be used to measure the angle between two faces of a prism. Such a fixture, arranged to check the 90° angle of a prism is shown in Figure 2414. In use, a master prism is placed so that one face of the angle rests on the three lower pins on the stage of the fixture. Next the prism is moved so that the other face that makes up the right angle is against the two pins that project horizontally underneath the indicator point, and the dial gage is set to read zero. When the dial gage has been set, any deviation from the zero reading that occurs when another prism is placed in the fixture will indicate whether the angle being measured is more or less than 90°. The amount of angular deviation can be determined from the reading, if the vertical distance from the center of the indicator point to the horizontal line connecting the centers of the two horizontal pins is known. If desired, the dial gage can be calibrated to read angular deviation directly.

The fixture shown in Figure 2415 is similar in operation, but is arranged to measure a 45° angle instead of a 90° angle.

Another application is illustrated in Figure 2416. This fixture is designed to measure the length of an abbe prism (see Chapter 14). In use, the prism is placed with the bottom 90° face on the stage of the fixture and the side

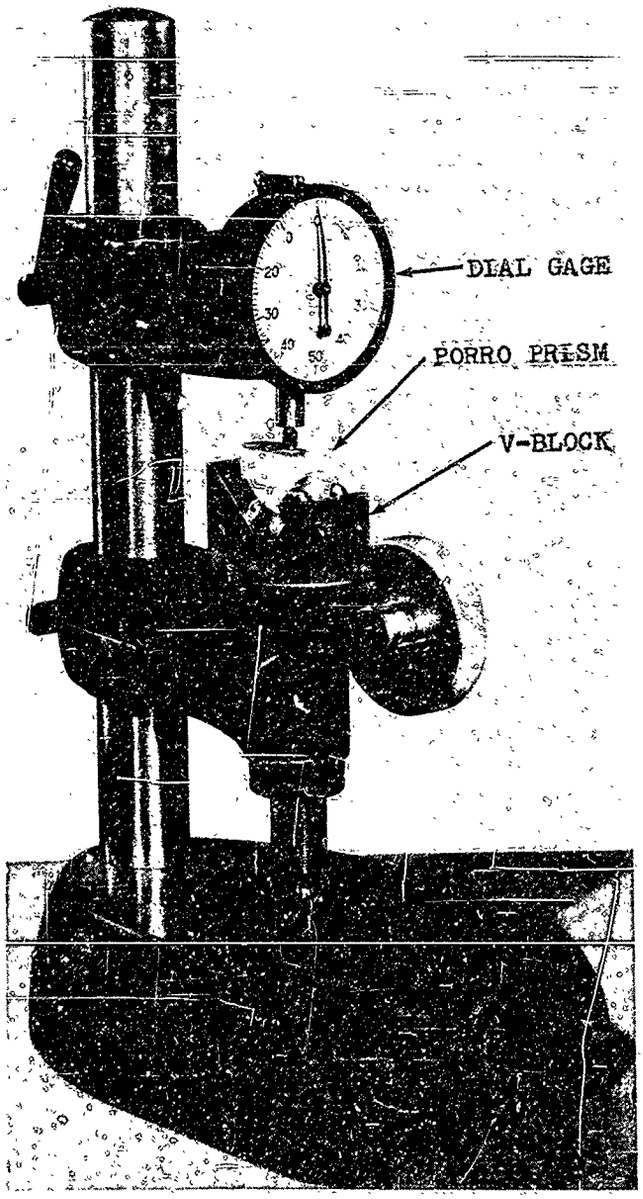

Eastman Kodak Company

Figure 2413.—Dial Gage and V-block Fixture for Measuring Dimensions and Angles of a Prism.

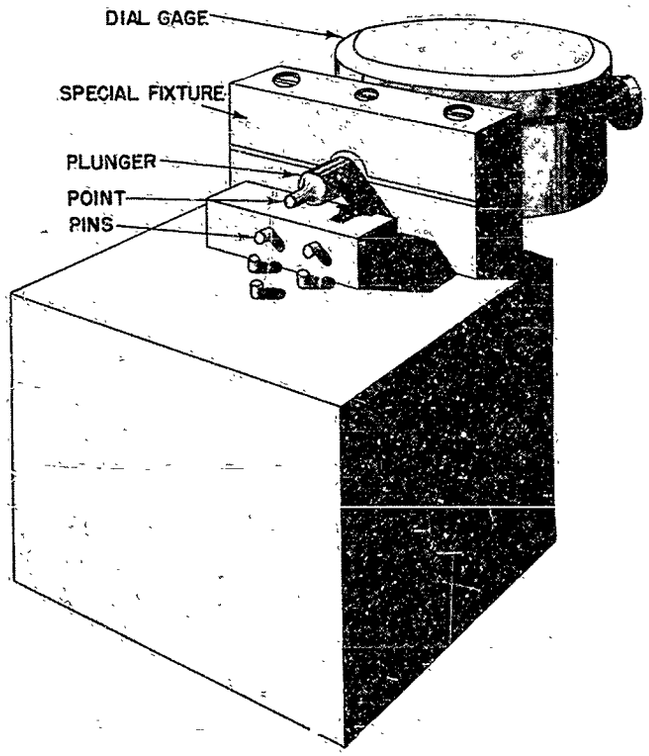

Minneapolis–Honeywell Regulator Company

Figure 2414.—Dial-gage Pin Fixture for Checking a 90° Prism Angle.

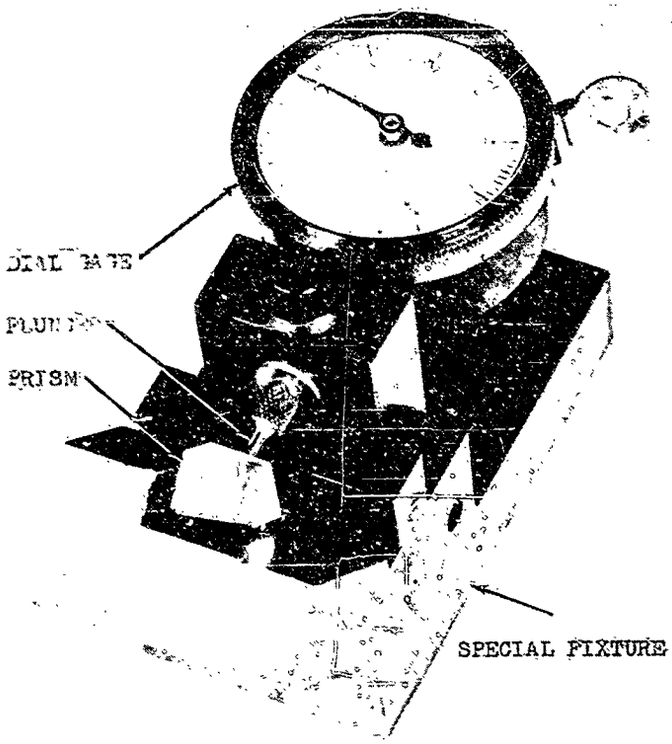

Minneapolis-Honeywell Regulator Company

Figure 2415.—Dial-gage Pin Fixture for Checking a 45° Prism Angle.

against the side guide and with the end 45° face towards the gage. Next the prism is moved along the side guide until the diagonal 45° face touches the vertical pin in the fixture. The indicator point can now rest on the end 45° face and will indicate the length of the prism, provided the two 45° angles are correct.

The accuracy of the angle of a circular wedge may be checked on a fixture similar to that shown in Figures 2406 and 2417. In Figure 2417 three hard metal balls are cemented to the table of the fixture to form a support for the wedge, and two cylindrical pieces are mounted in such a way as to serve as stops for it. The dial gage is adjusted so that the point of the plunger touches the surface of the wedge approximately 1/8 inch from its edge. The maximum and minimum readings of the gage are noted when a wedge is placed on the balls and rotated while in contact with the stops. A master wedge should be measured first, and the readings thus obtained should be used as a standard for measuring other wedges.

Master Reference Pieces

Normally, inspection instruments function satisfactorily, but when they are used continually, it is advisable to calibrate them occasionally. Instruments are usually calibrated by observing their indications when applied to master reference pieces of known dimensions. The function of such pieces is the same as that of the standard blocks used in the machine trades, *i.e.*, to provide a known dimension or angle as a reference. The shape and size of a reference piece varies according to the purpose it serves. In order to insure that such pieces retain their accuracy for a long time they are made of a hard material that will resist wear, and should be kept well protected in the toolroom, and used only for calibrating or checking purposes. Reference pieces to be used for calibrating can very often be obtained from the instrument manufacturer.

It is often advisable to check certain measuring instruments by noting the zero reading when the instrument is fully closed, as well as the reading when measuring pieces of known dimensions. The checking of a straightedge or the setting of a spherometer to zero is usually done with an optical flat of suitable diameter and precision. The accuracy of the fixed bar gage, and of the setting of the bevel protractor and adjustable bar gages are checked by using a reference piece having the required angle.

COLLIMATOR INSPECTION EQUIPMENT

The Collimator

A collimator whose function is to provide a source of light made up of parallel rays is an important component of many optical inspection devices. Such measurements as the focal length of a lens and the deviation of a prism should be made in parallel light. The design of a collimator is based on the fact that any light rays entering a symmetrical double convex lens from a light source placed at its focus, will emerge as a beam of parallel rays. A typical collimator is shown on the left-hand end of the lens bench in Figure 2420. In this collimator, a pinhole diaphragm which is illuminated by a strong light is placed at the focus

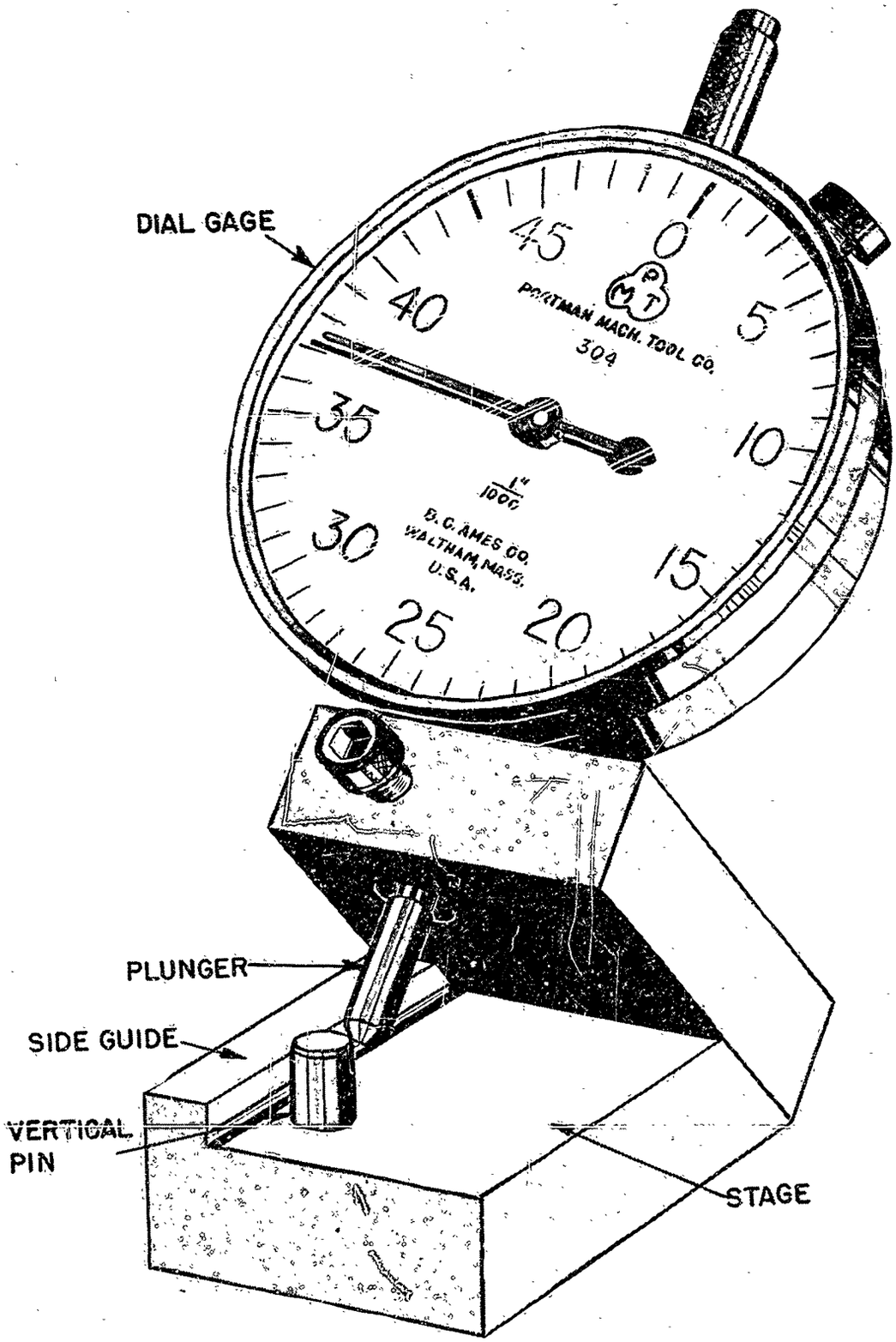

Minneapolis-Honeywell Regulator Company

Figure 2416.—Dial-gage Pin Fixture for Checking Length of Small Abbe Prisms.

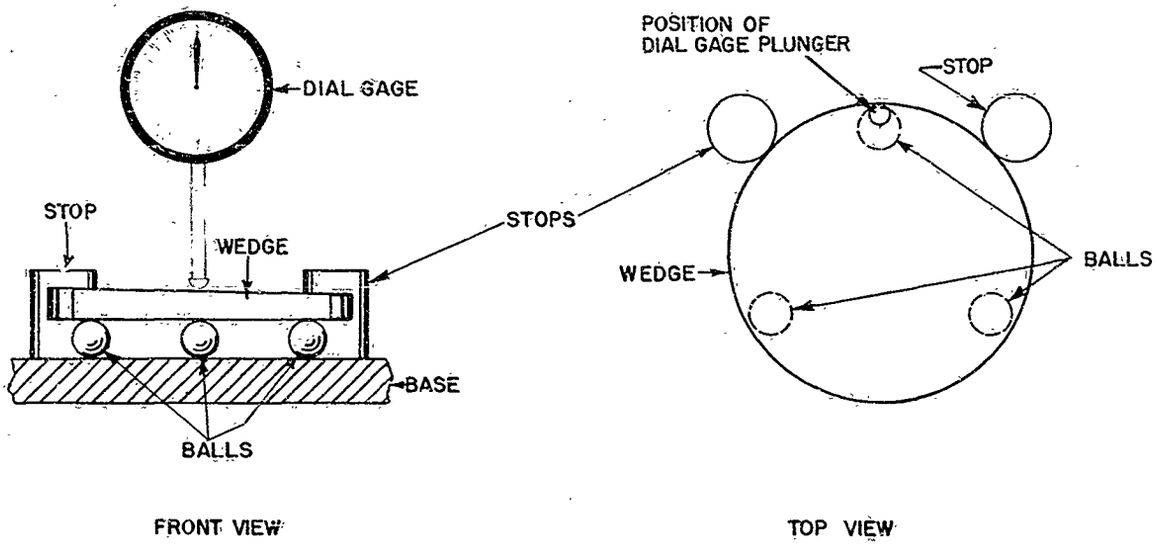

Figure 2417.—Setup for Determining the Accuracy of the Angle of a Circular Wedge.

of the objective lens of the instrument. The pinhole diaphragm may be replaced by a slit or series of slits, or by some type of definition chart, if desired.

The Autocollimator.—An autocollimator is used primarily to measure small angles or slight changes in angles. It is arranged so that it is possible to obtain an image of the target when the parallel rays are thrown back through the same objective over identical or nearly identical paths.

The stage of one form of autocollimator, shown in Figure 1529, is equipped with three steel balls, the plane of the upper surfaces of which is approximately perpendicular to the optical axis of the instrument. A wedge or plano-parallel plate can be laid with its ground surface on the balls and a reflection obtained from the polished surface. In the case of a wedge with two polished surfaces, for instance, an image is obtained from the reflections from both the top and bottom surfaces. Of course, the image that is reflected from the bottom surface is refracted twice as it passes through the upper surface. This instrument is useful for measuring small physical angles or light deviations of wedges accurately. An autocollimator and some of the fixtures that can be used with it are shown in Figure 2418. For a complete description, see discussion of the Perkin–Elmer instrument in Chapter 16 and *Experimental Optics.**

Lens Bench

The lens bench is an instrument for measuring the focal length of a lens, whether it be single or compound. In addition it can be used to test many other important characteristics.

The lens bench shown in Figures 2419 and 2420 contains three main elements, the collimator telescope, the nodal slide, and the observing microscope, together with the bed on which they are mounted. The collimator and the base of the nodal slide are permanently mounted on the bench, while the microscope is mounted on 'ways' which are attached to the bench and which are accurately machined and aligned, and along which the microscope may be moved. The bench is equipped with a graduated scale, usually placed just beneath one of the ways, while the microscope is equipped with an indicator and a vernier scale so that its position can be determined to within 0.001 inch.

The collimator telescope is arranged to fulfill two functions. One is to provide a suitable source of light, usually of parallel rays, and the other is to provide a proper target.

*Wagner, Albert F. *Experimental Optics*. pp 10, 111–114 New York: John Wiley and Sons, 1929.

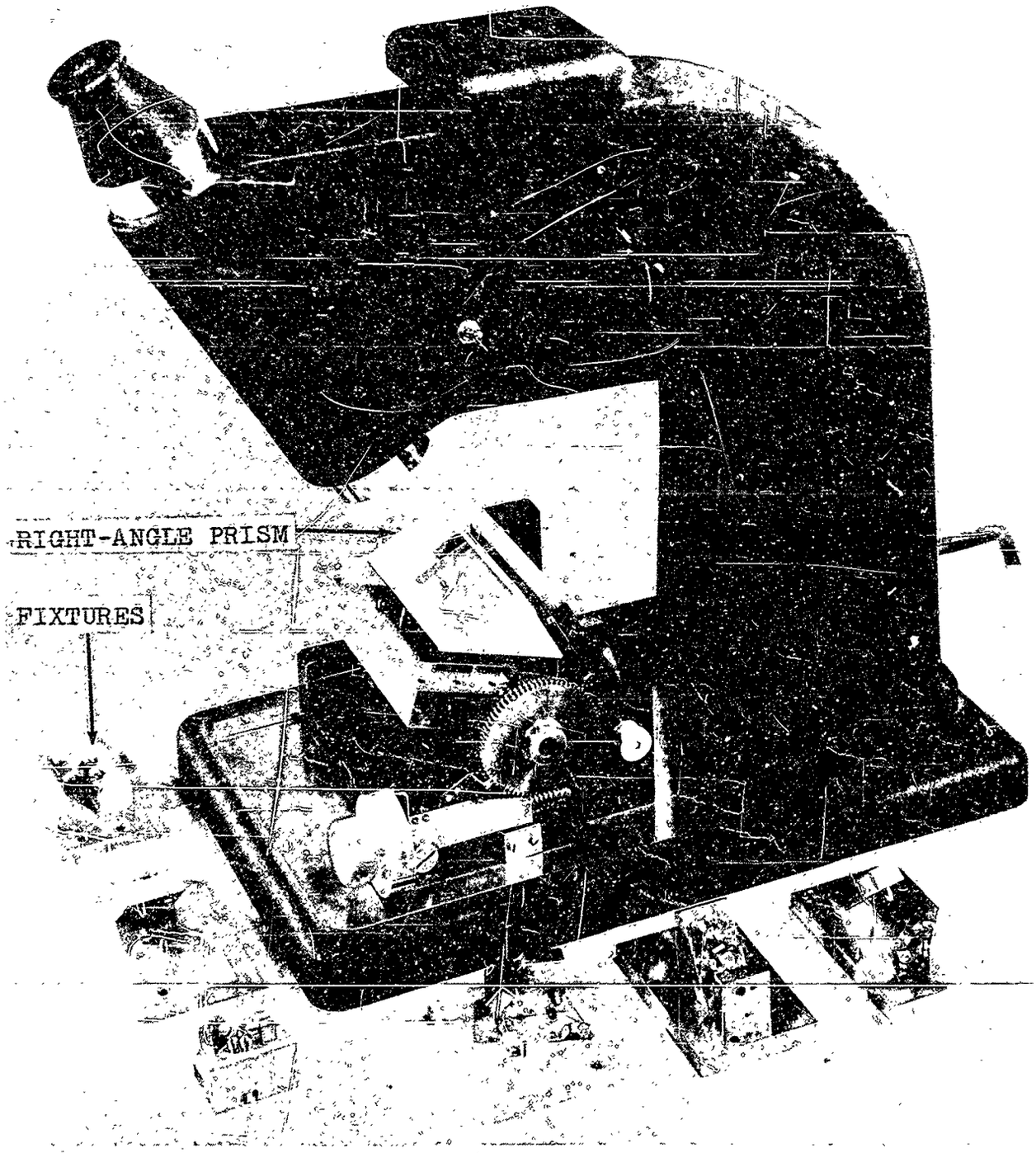

Eastman Kodak Company

Figure 2418.—Autocollimator Setup to Check a Right-angle Prism, and Fixtures Used for Various Prisms.

The nodal slide carries an adjustable chuck for mounting the lens which is under observation. This chuck is supported on the slide in such a way that it can be rotated on a vertical axis, and also can be moved longitudinally in a pair of short ways.

The observing microscope provides the high magnification that is required to observe and study any image formed by the lens being tested, and is provided with a suitable focusing adjustment.

The optical axis of the microscope and that of the collimator must be aligned accurately and pass through the geometrical center of the chuck on the nodal slide. In addition, the ways on which the microscope slides must be sufficiently precise so that this alignment will not be affected by any change in its location along the ways. The alignment of the collimator can be corrected by adjusting screws which are provided for the purpose.

Equivalent Focal Length.—The lens to be tested is mounted in the chuck of the nodal slide, using a light clamping pressure in order to avoid staining the lens, and the azimuth of the chuck is adjusted to zero. A mark with soft wax crayon is placed at the center of the surface of the lens facing the microscope. Then the microscope is focused on the mark and the chuck is oscillated with the lens through a few degrees of the azimuth on each side of zero. This oscillation will probably cause the image of the crayon in the microscope to shift laterally. Next, the chuck is moved longitudinally along its own slide, the microscope is refocused, and the chuck is oscillated again. The process is repeated until a position of the lens and chuck is found which will permit the image to remain stationary while the chuck with the lens is being oscillated. When this location has been found, the image of the crayon mark is focused as sharply as possible and the location of the microscope on the ways of the bench is read by means of the vernier and scale. This reading is often known as the 'constant' of the lens bench, because it is the same for any lens that may be tested on it.

The next step is to move the microscope along the ways until it is focused on the image of the target. (Caution: the microscope must

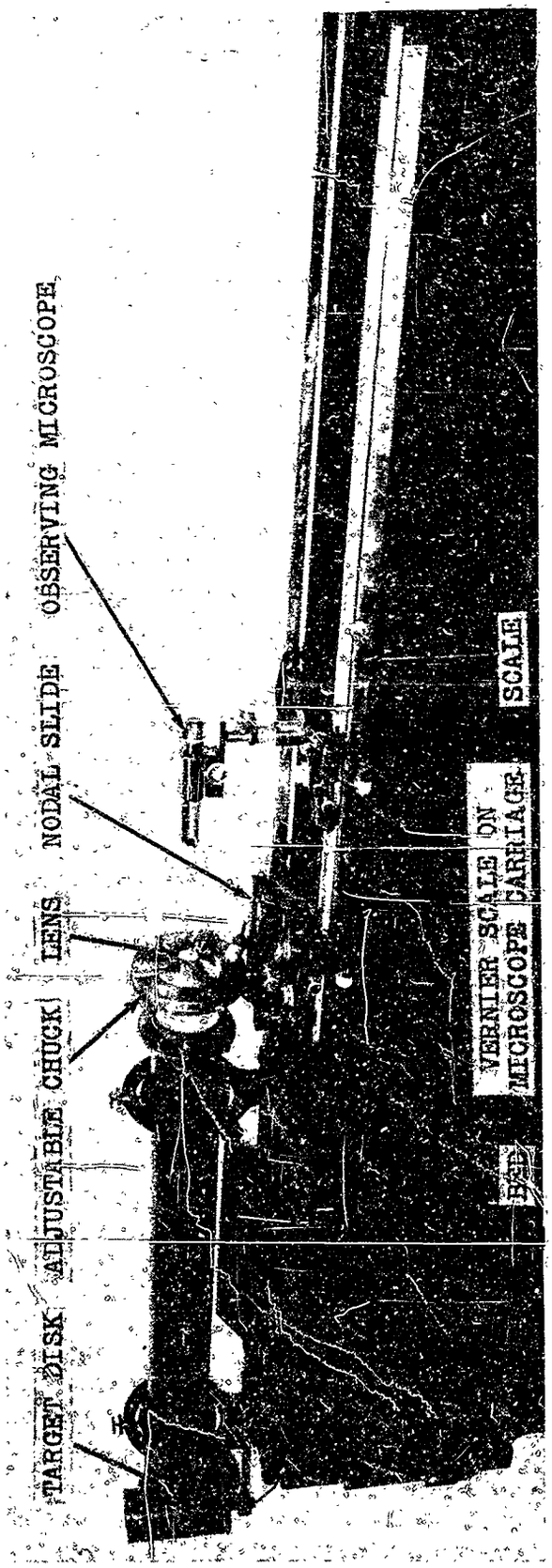

Figure 2419.—Optical Lens Bench Used for Checking Lenses.

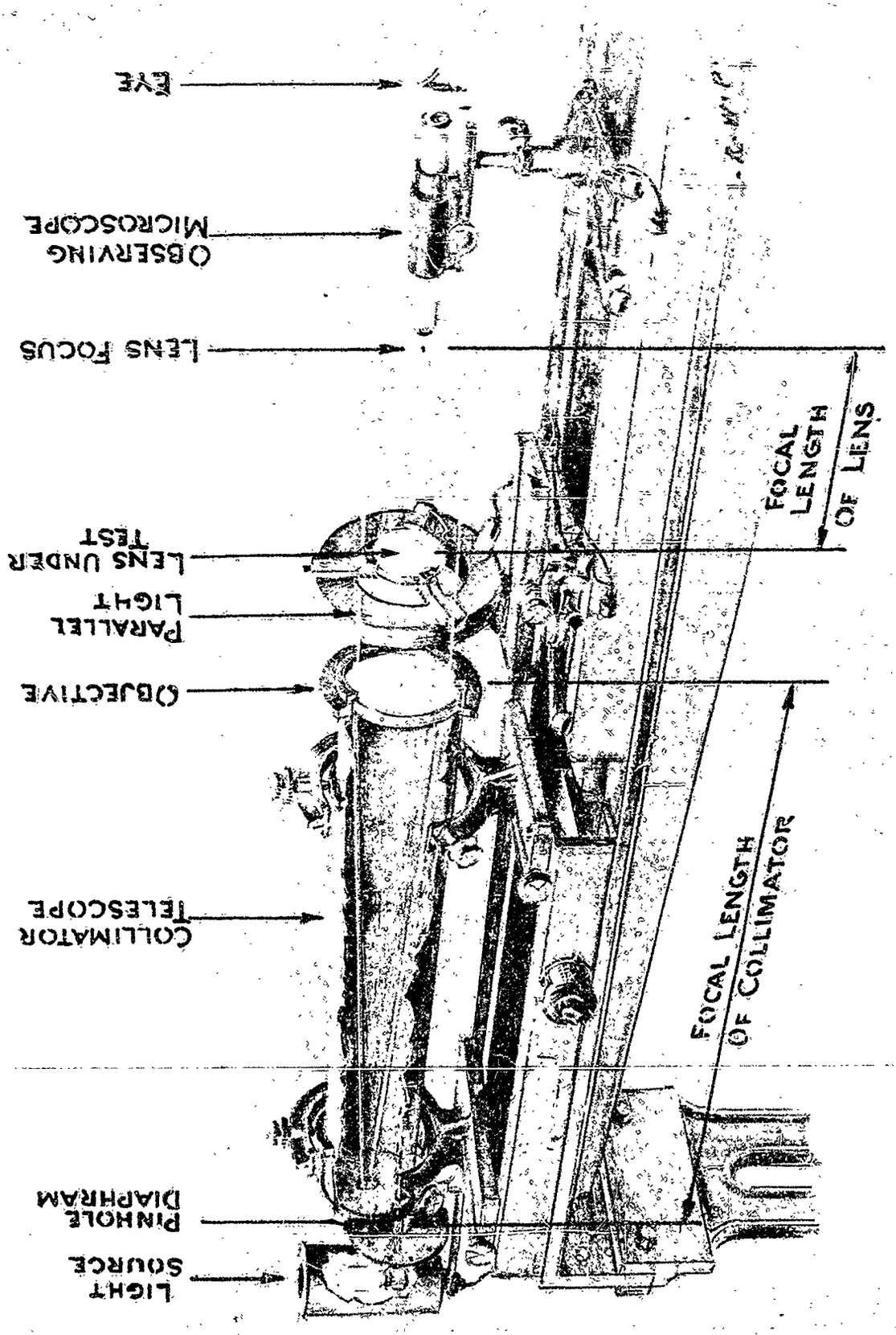

Drawing by Russell W. Porter

Figure 2420.—Lens Bench with Cut-away View of Collimator.

not be moved by means of its own focusing adjustment.) This setting should be corrected by oscillating the lens in the chuck, and moving the chuck and microscope in their respective ways in the same manner that was used previously, until the image of the target is stationary. When the proper position of the chuck and the microscope is determined, the new location of the microscope on its ways is read on the scale, again using the vernier. The difference between this reading and the constant that was previously obtained is the equivalent focal length of the lens.

Back Focal Length.—The lens to be tested is mounted in the chuck of the nodal slide, using a light clamping pressure in order to avoid straining the lens, and the azimuth of the chuck is adjusted to zero. A mark with soft wax crayon is placed at the center of the surface of the lens facing the microscope. Then the microscope is focused on the mark as sharply as possible and the location of the microscope on the ways of the bench is read by means of the vernier and scale. The next step is to move the microscope along the ways until it is focused on the image of the target. The new location of the microscope on its ways is read on the scale, again using the vernier. The difference between this reading and the reading previously obtained is the back focal length of the lens.

Aberrations. *Spherical Aberration.*—Spherical aberration can be measured by noting the difference between the settings of the observing microscope on the vernier scale when it is focused on the image of the target when only the central area of the lens being tested is used, and again when the outer annular area is used. In the former case, the outer annular area is covered with a ring of opaque paper or other suitable material. To make the latter observation, the central area is covered with a circular disk of similar material.

Chromatic Aberration.—Chromatic aberration may be measured by illuminating the image of the target with light of a known wave length, using a filter for the purpose, focusing the microscope on the image, and reading the position of the microscope on the scale. The process is repeated with different filters. The variation of the different scale positions of the microscope will give the effect of chromatic aberration of the lens with respect to the particular wave lengths used.

Astigmatism.—Astigmatism can be measured by noting the difference of the settings of the observing microscope on the vernier scale, when it is focused separately on any two lines of the image of the target that are perpendicular to each other.

Coma.—When the image of a point transmitted through a lens appears comet-shaped when viewed through the observing microscope, the presence of coma is indicated.

Curvature of Field.—The amount of the curvature of the field is determined by measuring the change of focus required when first focusing on the image through the axial center of the lens, and then focusing on the image through the outer field of the lens.

Distortion.—When the image of a line transmitted through a lens appears curved when viewed through the observing microscope, the presence of distortion is indicated.

Eccentricity.—A lens is said to be concentric when the geometrical or mechanical axis of the lens coincides with the optical axis. When a lens is concentric, there will be no perceptible movement of the image if the lens is rotated about its geometrical axis. Conversely, when these two axes do not coincide, the lens is said to be eccentric, and the amount of eccentricity is proportional to the movement of the image when it is rotated about its geometrical axis.

When the optical bench is to be used to measure the eccentricity of a lens, the regular chuck in the nodal slide is replaced by a special chuck which will permit the lens to be rotated freely on an axis parallel to the ways of the bench and coincidental with the axis of the collimator and microscope. When a lens is mounted in this chuck and is rotated through 360°, the image of the intersection of the cross lines will trace a circle against the target, as seen in the observing microscope. The radius of this circle is directly proportional to the eccentricity of the element under observation. A convenient target for measuring the actual amount of the eccentricity consists of a group

of twelve concentric circles whose centers are at the center of the target and whose radii will indicate a series of deviations of from 1 to 12 minutes for the particular focal length of the collimator being used.

Concentricity Testing Instruments

Testing Single Lenses.—A testing machine, developed by Eastman Kodak Company, is shown in Figure 2421. It is used to determine the eccentricity of either a positive or a negative lens, which it does by measuring the variation in the distance of the optical center of the lens from the circumference. The instrument itself contains three parts, see Figure 2421—the collimator, the centering device, and an observing microscope. The collimator, shown on the right in the photograph, provides a source of parallel light rays, which it directs past the lens mounted in the centering device in the middle of the instrument, from which they enter the objective of the microscope shown at the left.

The centering device contains two accurately-aligned vertical shafts, each of which is provided with a cup on the facing ends. Both of these shafts can be rotated around a common axis, while the upper shaft can be raised and latched.

The microscope can be moved both vertically and horizontally across the line of sight by means of micrometer adjusting screws, the upper wheel being used for the horizontal motion and the lower for the vertical motion.

Principle of Operation.—The principle of operation of the instrument is shown diagrammatically in Figure 2422. In this figure, "A" is the collimator that provides a source of parallel rays. These light rays strike the edge of the lens, "B," and then enter the objective, "C," thus throwing a shadow of the edge of the lens on the field of the microscope as shown in "D." The microscope is then moved horizontally and

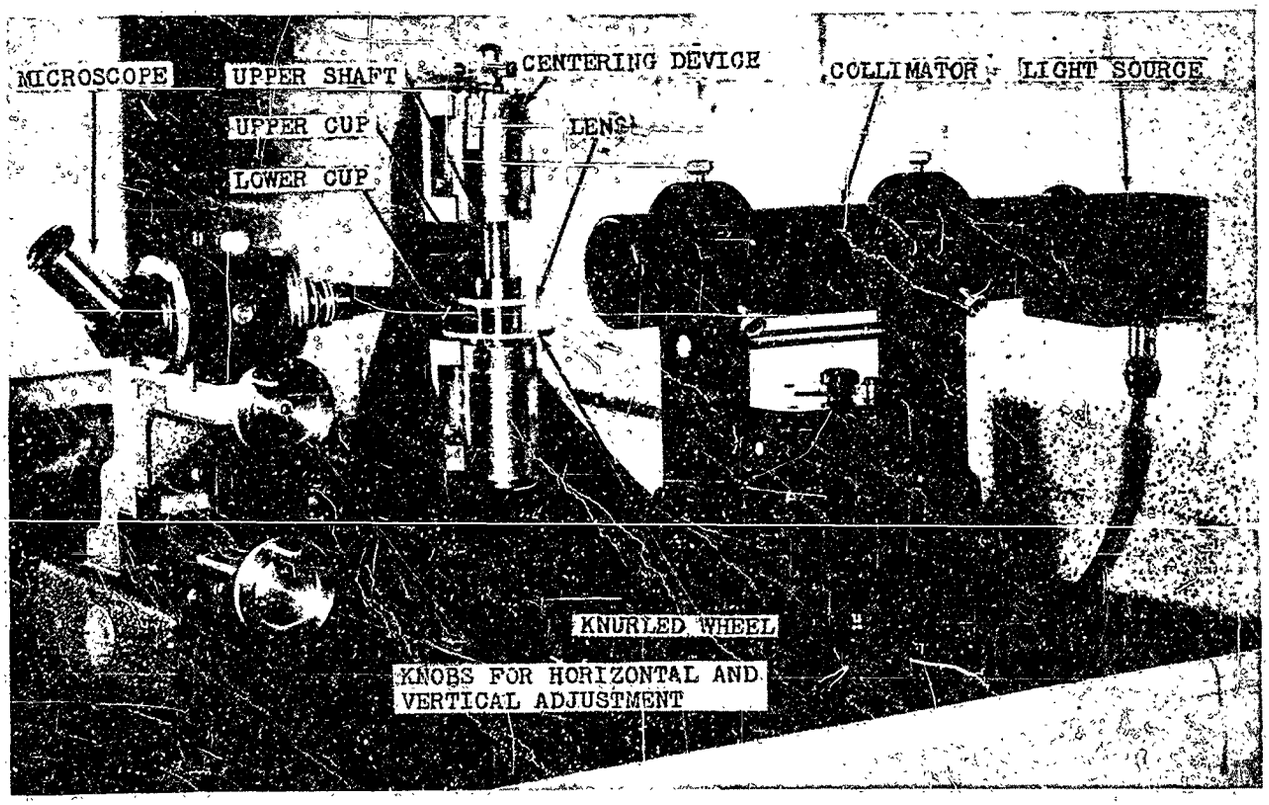

Eastman Kodak Company

Figure 2421.—Instrument for Measuring the Eccentricity of Single Lenses.

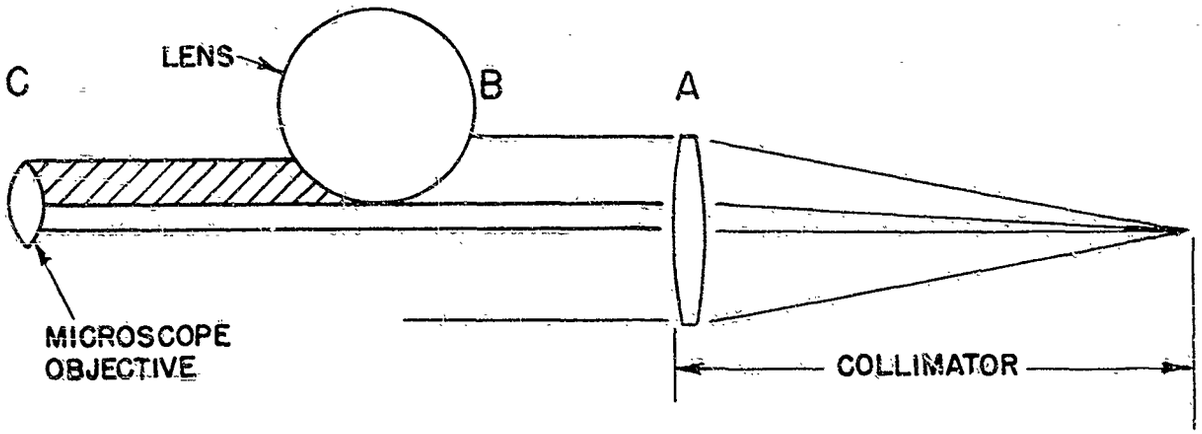

(a) Top View

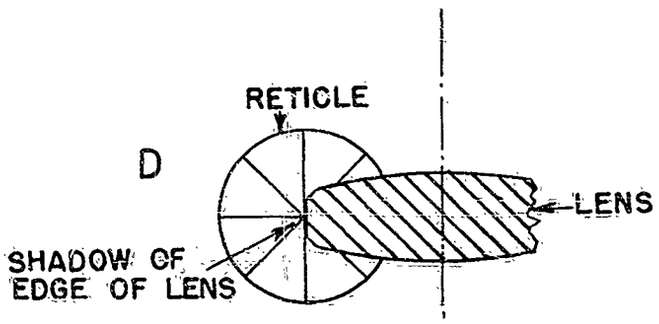

(b) Relative Position of Lens and Reticle as Seen Through Microscope.

Figure 2422.—Eastman Kodak Company's Instrument for Measuring Eccentricity.

vertically until the shadow of the edge of the lens falls on the intersection of the lines of the reticle.

Any eccentricity of the lens will cause this shadow to oscillate when the lower shaft, with the lens, is rotated. The next step, therefore, is to determine the positions of the two extremes of travel of this shadow by rotating the lens. As each of these positions is found, the microscope is moved horizontally until the shadow of the edge of the lens falls on the intersection of the lines of the reticle. The micrometer scale reading is then obtained. Half of the difference between these two readings is the amount of eccentricity, expressed in inches.

Method of Operation.—To use the instrument, the first step is to select a pair of shafts, which have cups of the approximate size and curve of the lens to be tested, and mount them in machine. These cups must be kept clean and free from burrs, in order both to avoid scratching the lens and taking incorrect readings. Next the upper shaft is raised, and the lens is placed in the cup of the lower shaft and centered approximately by hand. Now the upper shaft is lowered so that its cup rests on the upper surface of the lens and a moderate pressure is put upon it. This pressure will align the optical axis of the lens with the geometrical axis of the cups and therefore with the axis of rotation of the shafts. Next the upper shaft is raised and latched and the lens is ready for taking observations.

The microscope is now lined up with the edge of the lens by means of the two micrometer screws and focused sharply on the edge of the lens. By means of the large knurled wheel, the lower shaft, and with it the lens, is rotated in order to determine the position of the limits of travel of the shadow of the edge of the lens.

Next the microscope is moved horizontally, as each of these two positions is found, until the cross lines of the reticle line up with the shadow of the edge of the lens, and a micrometer scale reading is obtained. These two readings give the extremes of displacement of the edge of the lens. From these the amount of eccentricity can be determined quite readily.

The lens is now removed, another placed in the lower cup, the upper shaft lowered and turned to center the lens optically, and the observations are repeated. It is not necessary to change the shafts with their cups until a lens with a different curvature is to be tested.

It will be observed from a study of the instrument that it is not ordinarily necessary to re-focus the microscope for each lens, and that the sole purpose of the upper shaft is to center the lens to be tested optically on the lower shaft.

The instrument can also be used to check the width of the angle of bevel by sighting on the corners of the bevel instead of on the edge of the lens. In this case, the lines of the reticle of the microscope are lined up with the corners of the bevel by using either the horizontal or the vertical micrometer movements. The difference between each pair of readings will give either the horizontal length or the vertical height of the bevel at the point observed. The actual width of the face of the bevel and its angle can be calculated quite easily from both sets of readings.

In properly-trained hands, it is claimed that this instrument will give readings to within 0.0001 inch.

Testing and Aligning Cemented Doublets.—The collimator aligning instrument shown in Figure 2423 is used to align the optical axis of a positive crown lens with that of a negative flint lens. In using the instrument the optical and the geometrical axes of the flint lens should coincide.

The fixture contains an observing telescope, sometimes of the elbow type for operating convenience, equipped with a reticle, a horizontal universal-type chuck, and a collimator tube equipped with an electric light bulb and a second reticle which is etched with cross lines. When the reticle in the observing telescope is etched with cross lines, this instrument is used purely as an aligning fixture. However, if a reticle etched with a series of concentric circles whose radii will indicate a series of deviations of 1 minute each, is mounted in the observing telescope, then this fixture may be used both for alignment and for measuring the amount of eccentricity.

To perform the aligning and checking operations, the doublet, flint down, is held by the flint in the three-jawed chuck which is arranged so that the chuck with the lens can be rotated about its geometrical center. The chuck, holding the flint and with the crown lens resting on top, is slowly rotated by hand while the crown is moved to different positions on the

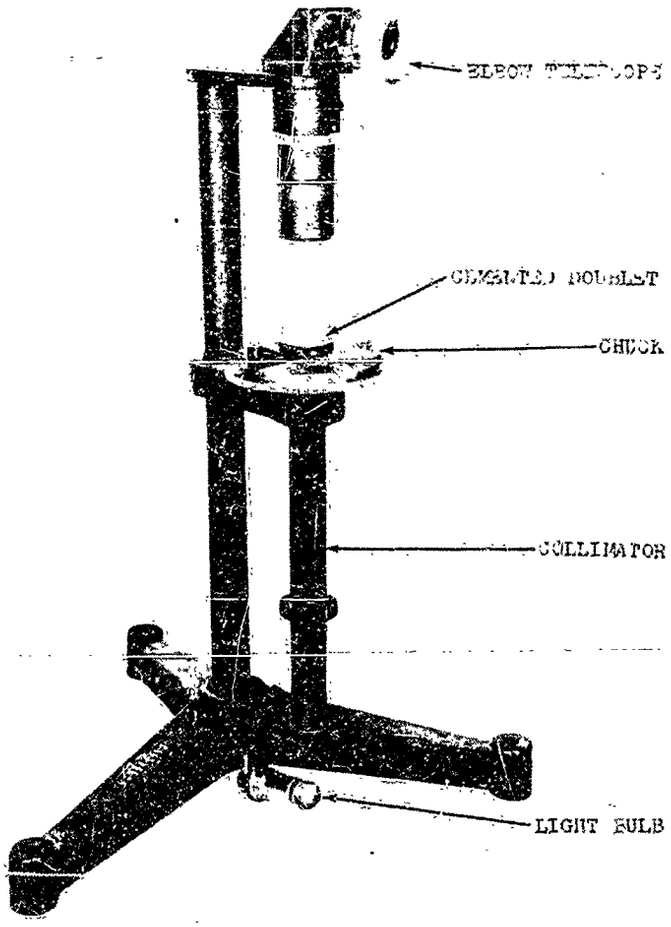

Figure 2423.—Collimator Aligning Instrument for Aligning and Checking Optical Axes of Cemented Lenses.

flint until there is no noticeable movement between the cross hairs on the reticle in the collimator and the center of the reticle in the observing telescope. When this condition has been reached, the optical axis of the crown will coincide with the geometrical and, therefore, with the optical axis of the flint.

However, in testing for concentricity, the amount of movement between the cross lines in the collimator and the center of the concentric circles in the observing telescope, must fall within specified tolerances. This is determined by rotating the chuck through 360° which will cause the image of the intersection of the cross lines in the collimator to trace a circle against the concentric circles in the observing telescope.

See, also, Figures 2011 and 2012 which show a similar type of fixture.

The Spectrometer

This instrument, shown in Figure 2424, is used to measure the angles between any two faces of a prism or wedge. It does this by measuring the angle through which a beam of light is deflected when it is reflected from a surface of an element.

The instrument contains a stage at the center of the device which can be raised or lowered, a collimator, and a viewing telescope. The latter two are arranged radially to the center of the instrument and their optical axes intersect at the vertical axis of the instrument. Both the collimator and the viewing telescope can be rotated around this vertical axis, and their actual angular positions can be read by means of a vernier on a circular scale (not shown in Figure 2424) to within a few seconds, in the

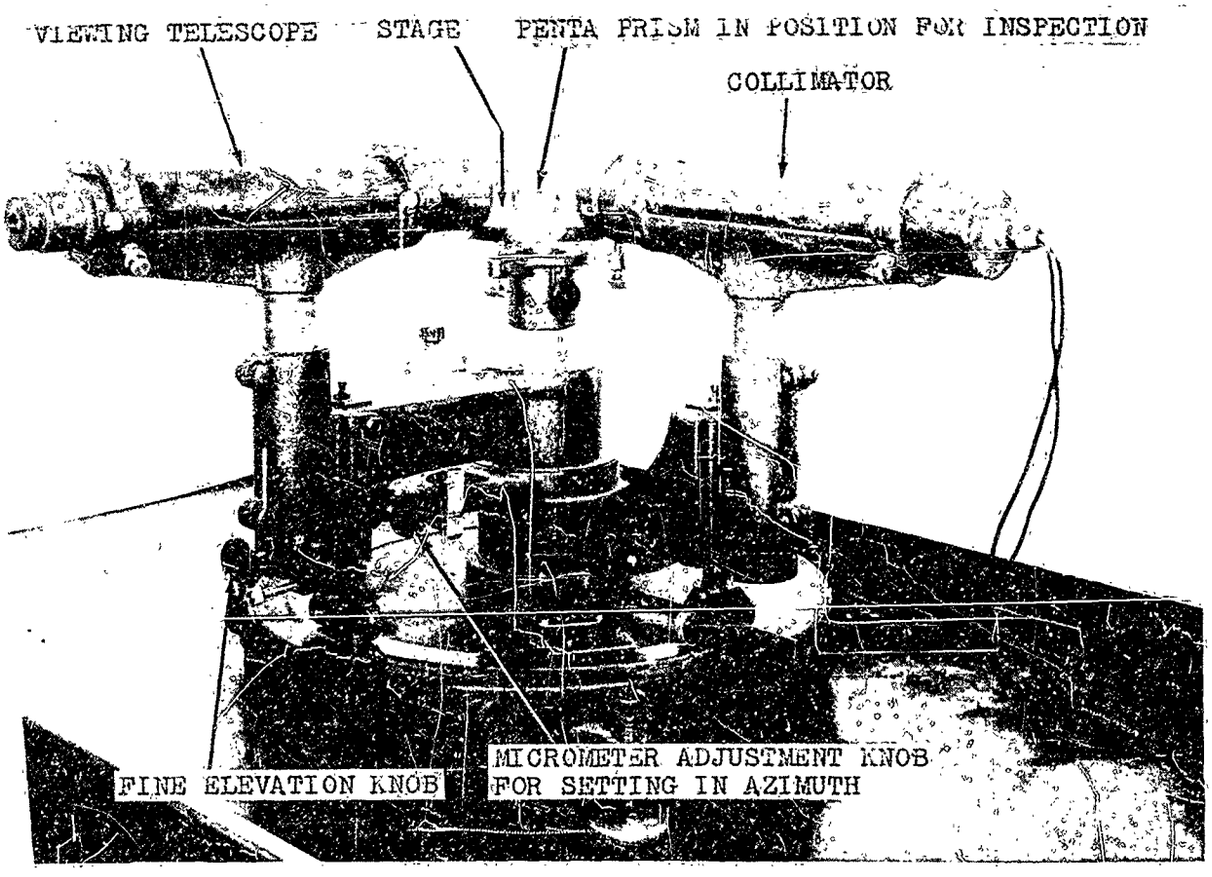

Figure 2424.—A Spectrometer Used to Measure the Angle Between any Two Faces of a Prism or Wedge.

case of a very accurate instrument. The collimator is usually fitted with a graduated reticle and the viewing telescope is provided with cross hairs. The prism to be observed is placed on the stage against an adjustable stop, with which the stage is equipped, in order to locate it definitely. (No stop is shown in Figure 2424 because no stop is necessary when testing a penta prism.) The telescope and collimator are rotated around the axis of the instrument until the cross lines of the target are aligned with those of the telescope. The desired angle can then be determined by reading the locations of the viewing telescope and the collimator on the graduated circular scale on the instrument.

When it is desired to compare several prisms with a master, it is sometimes more convenient to set the master on the stage against the stop and line up the collimator and viewing telescope until the cross hairs of the viewing telescope coincide with the central line of the reticle in the collimator. When this has been done, the angular displacement of the viewing telescope and the collimator will be the same as the angle of the prism that is being measured. When a second prism is placed on the stage, any difference in the angle between its faces will be seen in the viewing telescope, because the cross hairs will no longer coincide with the central line of the reticle. When the spectrometer is to be used in this way it need not be equipped with the graduated circular scale. Where accuracies of a higher degree are required, it is necessary to correct the readings for differences in the glass of the prism, the temperature of the room, and other variables.

The Goniometer

The goniometer (See Figure 1514) is an instrument for measuring prism angles. It contains an autocollimating telescope, a stage on which are mounted three balls, and a circular scale with a vernier mounted in a vertical plane.

In using the goniometer, the stage is leveled. Then a master prism, usually a 45 or 90° prism, is placed on the balls of the stage, and the autocollimator is rotated until the center of the beam which is reflected from the front surface of the prism coincides with the intersection of the cross lines of the autocollimator reticle. The vernier is then set to read the angle corresponding to the master prism.

The prism to be tested is substituted for the master prism. The cross line in the collimator is then brought into coincidence with the beam reflected from the front surface of the prism, and a reading is taken from the vernier. This reading indicates the difference in angle between the master prism and the prism under test.

Pyramidal-error Detecting Instrument

To detect any pyramidal error of porro, dove, and 90° prisms, *i.e.*, the sideward shift produced when the intersection of the short sides of the prism is not parallel to the long side, or hypotenuse, of the prism, it is only necessary to use a collimator and a telescope fitted with a reticle etched with a series of equally-spaced vertical lines and placed with objectives toward each other, as shown in Figure 2425. The telescope and collimator are focused for infinity and adjusted so that the single vertical line or slit of the collimator coincides with the central or zero line on the reticle of the telescope. The prism to be tested is placed with the hypotenuse down, directly between the collimator and telescope, and at such a height that light from the collimator enters one short side of the prism, reflects internally from the hypotenuse side, and emerges from the other short side to enter the telescope.

When the prism is placed in position as described above, the image of the vertical line of the collimator will be shifted to the right or to the left on the reticle of the telescope, if any pyramidal error exists. It should be understood that, while the angular shift that is observed in this instrument is proportional to the pyramidal error, it is only about 30 per cent of its true value, the actual ratio depending on the index of refraction of the glass. This difference is because the light does not follow the same path in passing through the prism when it is mounted in the testing instrument that it does when it is assembled in the instrument for which it is designed. However, the displacement is in the same direction so

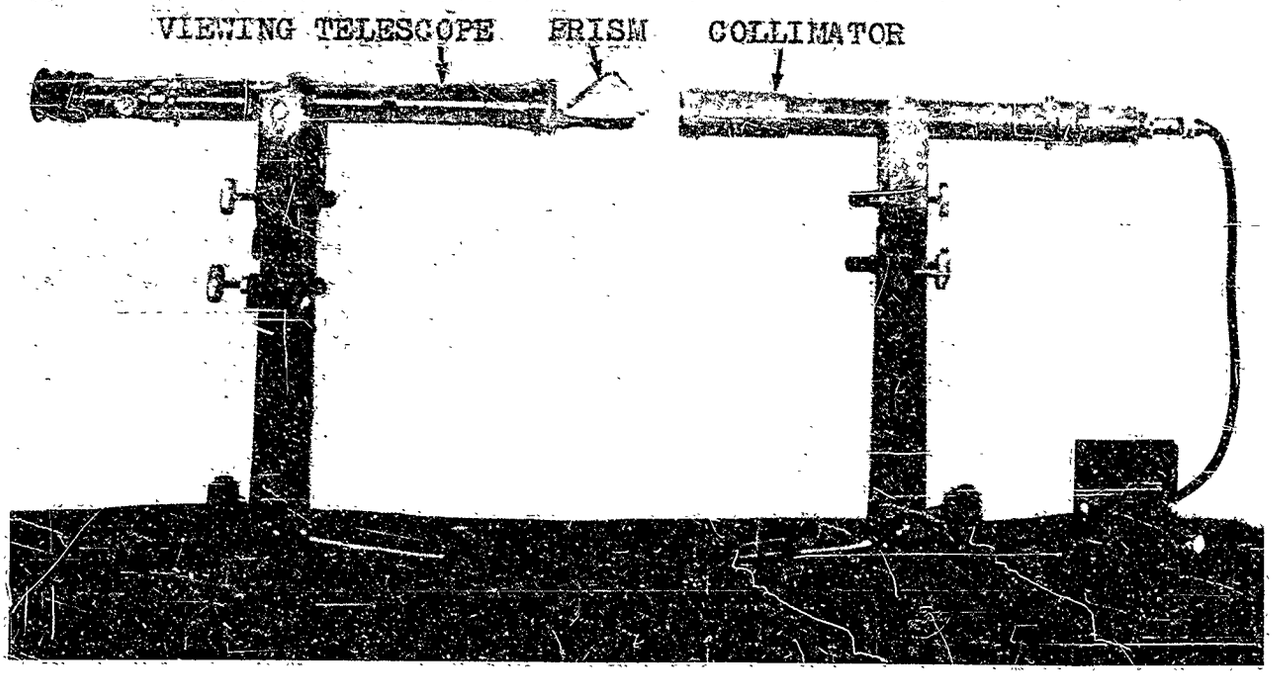

Figure 2425.—Instrument for Detecting Pyramidal Error of a Prism.

that the operator will know at once in which direction to 'work' the prism to correct it. This instrument does not give very accurate indications of the actual value of the pyramidal error and should not be used for such determinations.

Parallelism Instrument

This instrument is used to measure the parallelism of the surfaces of filters, reticles, or any other flat pieces of glass. It contains a telescope equipped with a target reticle graduated in minutes, a level stage, and a tube in which is mounted a reticle etched with a pair of cross lines. When observed through the telescope, the intersection of these cross lines must coincide with the center of the graduated reticle.

In Figure 2426 an elbow telescope is used. The instrument is illuminated with an electric light bulb, placed below the tube. The glass to be tested is placed on the stage. If the surfaces of the glass are perfectly parallel, there will be no displacement of the cross lines when viewed through the telescope, but if they are not parallel, thus forming a slight wedge, the light rays will be refracted, and their deviation of light can be measured by the displacement of the cross lines against the graduated reticle in the telescope.

Functional Collimator Fixtures

The M3 binocular reticle-inspection fixture shown in Figure 2427 offers an excellent example of a functional testing fixture. The main portion of the instrument is half of the body of a standard M3 binocular, with the body cover omitted and the assembly altered to receive a slide carrier, which has a hole that allows light to pass through the system. This slide, which can be moved horizontally in the focal plane of the assembled ocular, has several recessed holes to hold the reticles being inspected. The assembly is fitted to a tube which in turn is mounted on a heavy metal base. Enclosed in the base is a light which illuminates the system through a condenser lens.

SPECIAL INSPECTION EQUIPMENT

Reference Surfaces. — Reference surfaces are treated in Chapter 22, *Optical Flats and Test Glasses,* together with a thorough discussion of the techniques applicable to their use,

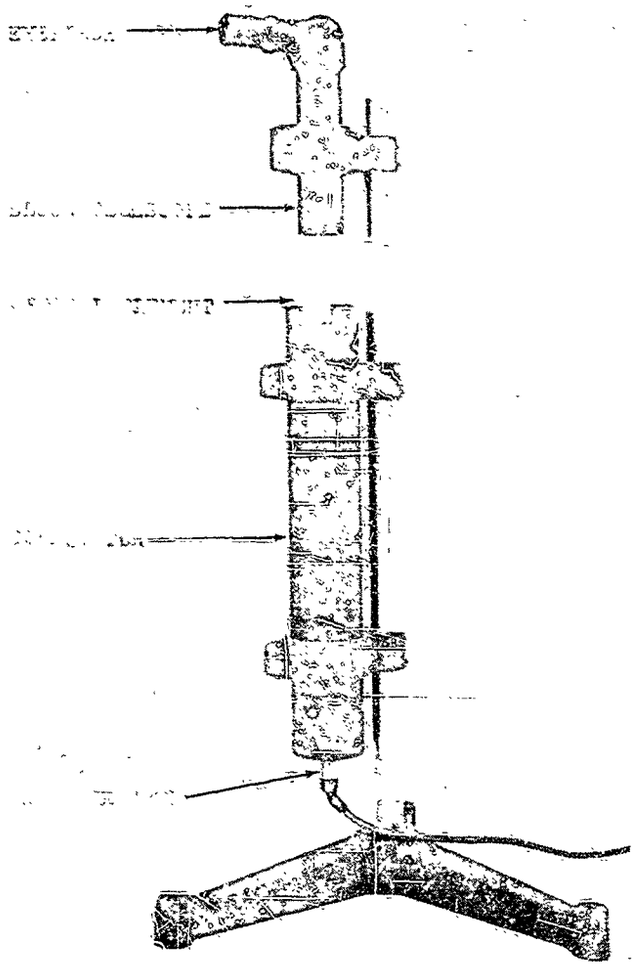

Figure 2426.—Instrument for Checking Parallelism of Filters, Reticles, and Other Flat Pieces of Glass.

methods of testing them for accuracy, and an explanation of some of their optical properties.

Star Test.—The early designers and makers of telescope lenses used the stars for testing the image quality of lenses, hence the 'star test'. The results of these tests form the background of the design, manufacture, and test equipment now in use. Due to the inconvenience and loss of time in using the stars, the artificial star method was developed for the laboratory and work shop. See Figures 2419 and 2420. For practical shop use, and as an aid to production, a star test can be set up quickly and economically as shown in Figure 2428. For interpretations of star-test images see *Amateur Telescope Making** and *Prism and Lens Making,*** pages 92–96.

Interferometer.—Probably the most useful instruments ever designed for the testing of precision optical elements are the Twyman and Green types of interferometers which are in common use by Adam Hilger Ltd. London, England. Twyman has given descriptions of several of the interferometers used by Hilger for testing various types of optical elements. See *Prism and Lens Making,*** pages 119–125. The interferometer is also discussed in *Experimental Optics.****

Two precautions with regard to setting up the instruments mentioned above should be taken, in addition to the necessary high optical quality of the dividing plate and end mirrors. The pinhole should not subtend an angular diameter much in excess of 100 seconds of arc at the collimator objective, and the mercury arc should be of a low-pressure type so that the spectral lines are fairly narrow. Both of these factors have a pronounced effect on the visibility of the bands.

The Mergenthaler Linotype Company's adaptation of the interferometer, as built at Frankford Arsenal, is shown in Figure 2429.

Fixture for Testing Definition and Resolving Power of Various Elements.—This fixture consists of a suitable illuminated wall target, *e.g.*, see Figures 1508 and 1509, and a suitable telescope mounted on an adjustable base, *e.g.*, see Figure 1506. Telescopes of various powers are required, since various magnifications are specified on the drawings. To test the definition of filters, reticles, windows, mirror blanks, and dove prisms, the viewing telescope is set at 180° to the wall target and focused on the pattern. The filter or reticle is placed in front of the telescope objective and the image is viewed through the telescope.

* Ingalls, Albert G., Editor. *Amateur Telescope Making.* (Reprinted from articles in "Scientific American.") 4th edition. pp. 428–436. New York: Munn and Company, 1939.

** Twyman, F. *Prism and Lens Making.* London: Adam Hilger Limited, 1942.

*** Wagner, Albert F. *Experimental Optics.* pp. 83–87, 170–173. New York: John Wiley and Sons, 1929.

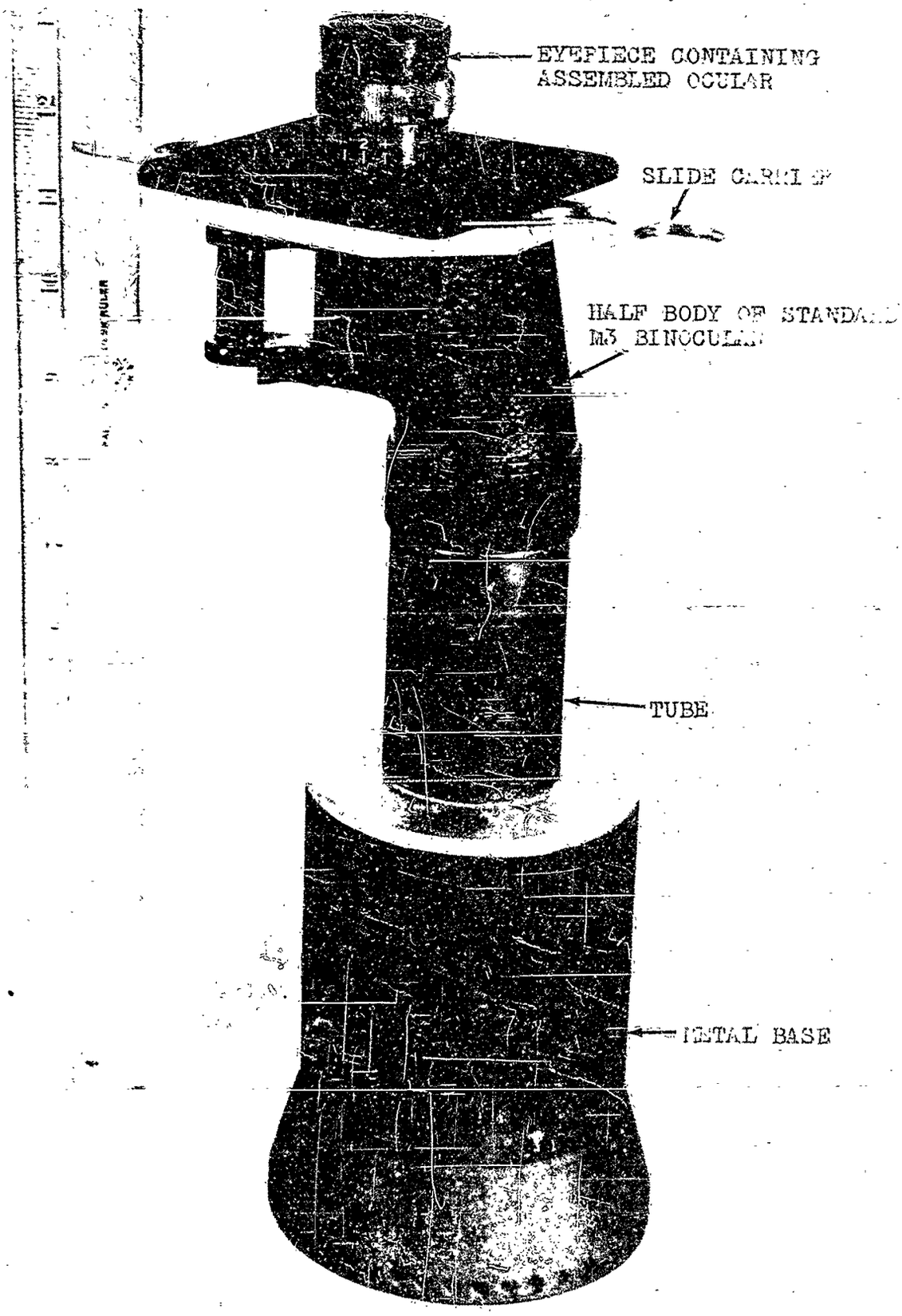

Figure 2427.—Functional Reticle-inspection Fixture.

Ranco, Incorporated

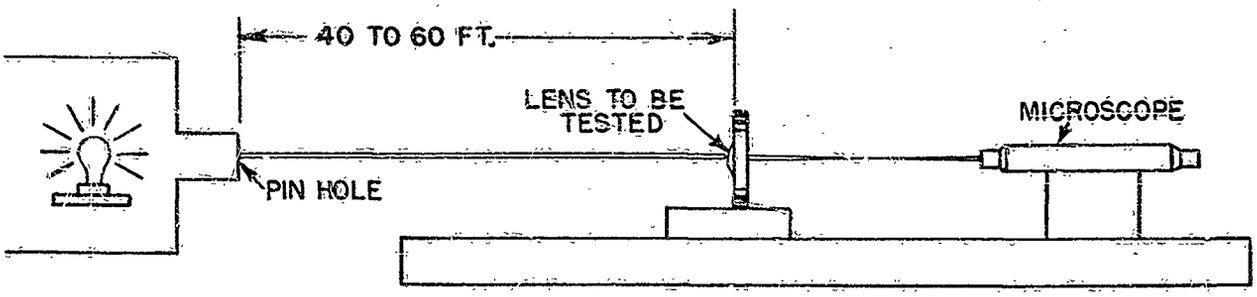

Figure 2428.—Setup for Making a Star Test.

To test the definition of abbe prisms, rhomboid prisms, leman prisms, etc., the telescope is set as above, the prism is placed in front of the objective of the telescope, and the target is viewed through the telescope.

The procedure for inspecting 90° prisms, penta prisms, amici prisms, and porro prisms is exactly the same except that the image is viewed with the telescope set at 90° to the target, the telescope being set up with the aid of a master penta prism. (See Figure 1507.)

Toolmaker's Microscope.—This microscope, shown in Figure 2430, is used to measure the centralization of the pattern with respect to the geometric axis of graduated reticles, the thickness and spacing of lines, the size of bevels, and for many other purposes. It has a movable stage with horizontal travel in two directions, one lateral and the other longitudinal, with micrometer adjustments to 0.0001 inch. For angular measurements the eyepiece is equipped with cross lines and has a vernier scale reading to 1 minute. The center of the stage is a glass plate, under which is mounted a light.

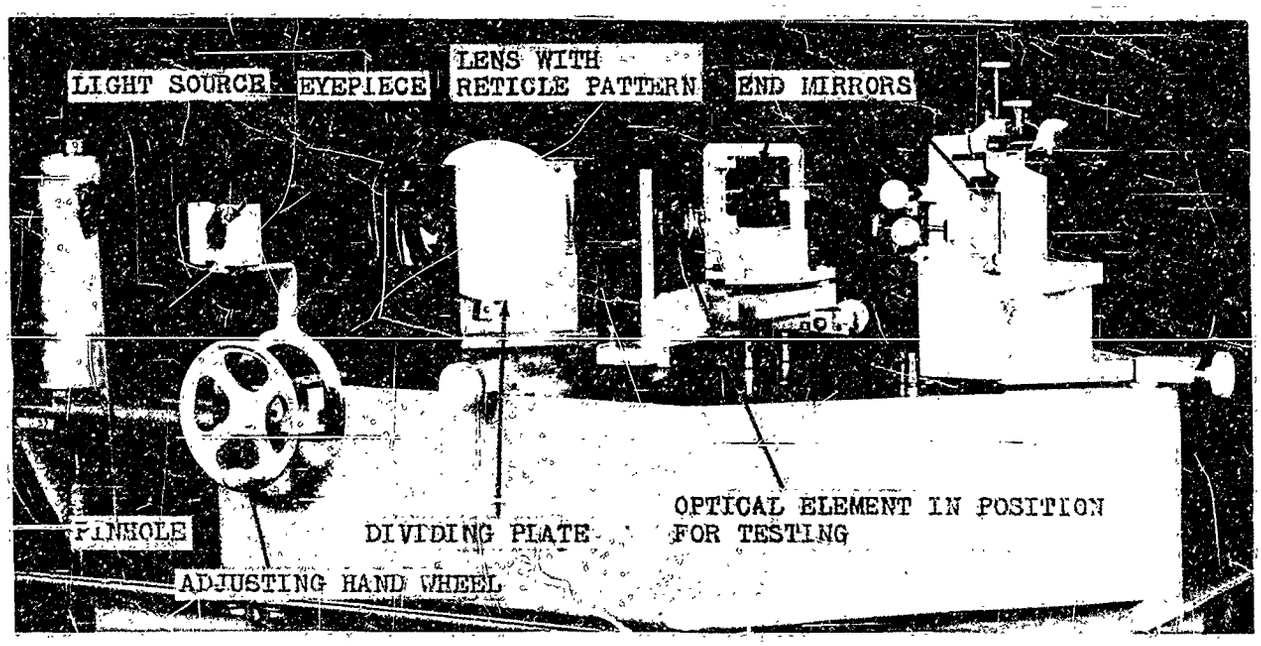

Figure 2429.—Interferometer for Testing Various Optical Elements.

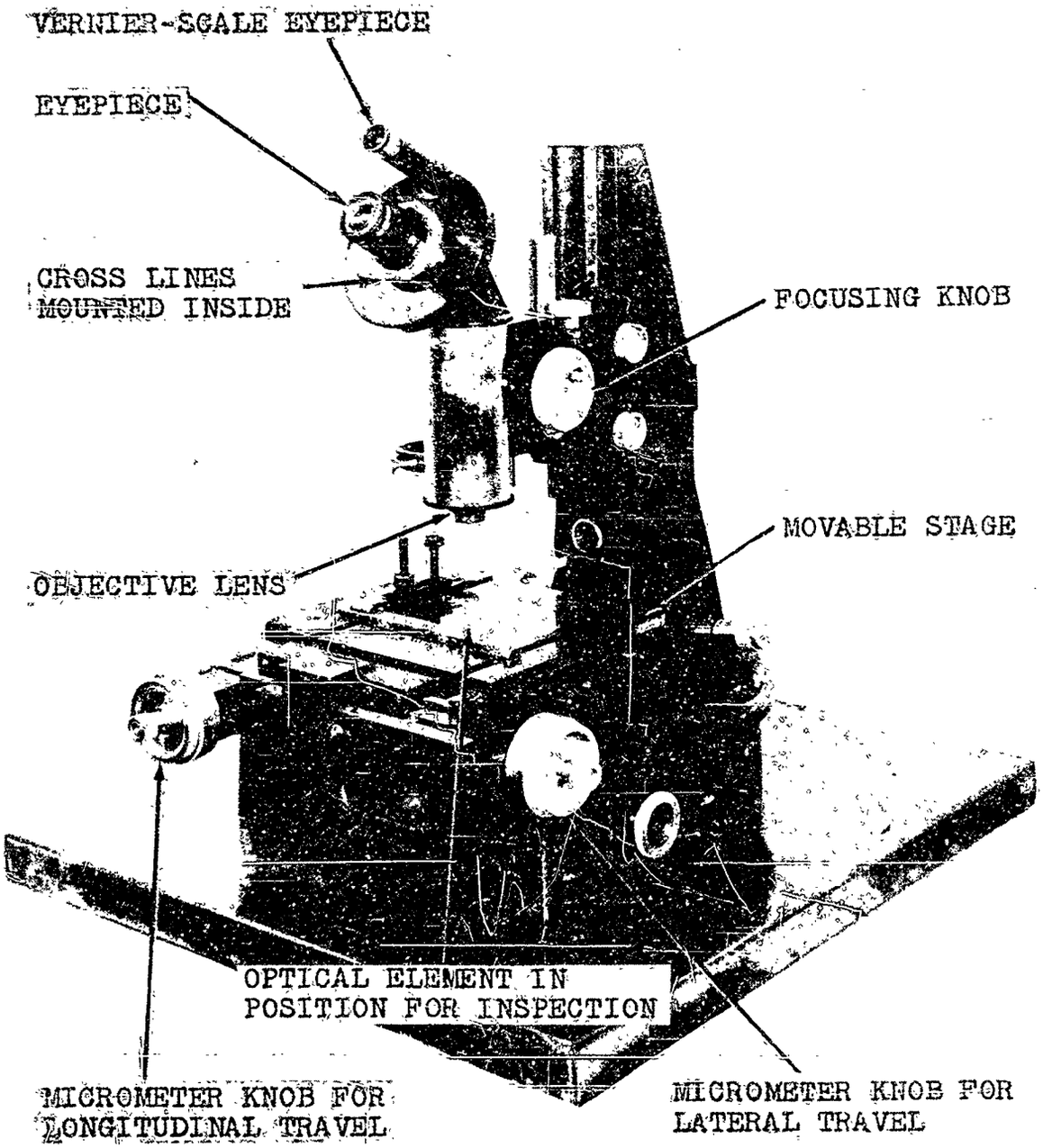

Figure 2430.—Toolmaker's Microscope Used for Checking Reticle Patterns.

CHAPTER 25

MATERIALS

	Page No.
Grinding Abrasives.	2502
Loose Grinding Abrasives.	2502
Brush Surface Analyzer.	2504
Levigated Alumina.	2504
Coolants.	2504
Polishing Abrasives.	2504
Choice of Polishing Abrasive.	2506
Ferric Oxide.	2506
Rare Earths.	2506
Cerium Oxide.	2506
Barnesite.	2507
Blocking Materials.	2507
Plaster of Paris.	2507
Blocking Adhesives.	2507
Polishing Pitches.	2507
Method of Standardizing Polishing Pitches.	2509
Protective Coating Materials.	2511
Optical Cements.	2511
Canada Balsam.	2511
Synthetic Cements.	2512
Thermoplastic Cements.	2512
Thermosetting Cements.	2512
Pure Butyl Methacrylate Cements.	2513
Preparation and Handling of Thermosetting and Pure Butyl Methacrylate Cements.	2513
Other Materials.	2515
Chemical Reagents.	2515
Solvents.	2516
Miscellaneous.	2516

Materials referred to throughout the text of this manual are treated variously in this chapter. Where it seems advisable, as in the case of grinding abrasives, polishing abrasives, and blocking materials, for example, points relevant to a proper understanding of the materials are discussed at some length. Where the use of materials noted is easily understood, as in the case of many chemical reagents for example, the materials are simply listed together with an indication of what grade should be used and, in some cases, the form that is necessary in the chapter referred to.

In several cases tables have been prepared for the purpose of making considerable information available at a glance. In the table of loose grinding abrasives, Figure 2501, the products of several major manufacturers are listed in such a way that the type of abrasive material and the approximate average particle size of each—both in microns and decimals of an inch—are shown. In Figure 2504 formulas for various blocking waxes used at Frankford Arsenal are given. The control of polishing pitch hardness is an important factor in the processing of any optical element. In Figure 2505 and related text, a method of controlling polishing pitches is set forth.

GRINDING ABRASIVES

Loose Grinding Abrasives.—The two materials that are most widely used for grinding optical glass are aluminum oxide (Al_2O_3), and silicon carbide (SiC). One company is also now making fine abrasives from domestic garnets. The exact composition of the garnets is variable, but it is known to be a mixture of calcium, iron, magnesium, and aluminum silicates. In addition, some silicon dioxide (SiO_2) is used, but the total amount is very small.

Two types of aluminum oxide are used in great volume for grinding glass. The first is a synthetic or fused aluminum oxide which is produced by fusing bauxite (hydrated aluminum oxide) in the presence of coke and iron in an electric furnace. The second type of aluminum oxide is natural corundum. This material is mined in South Africa and, because of crystal habit, has until recently always been preferred for the production of optical finishing powders.

It should be noted that 'corundum' and 'carborundum' are entirely different words. In general usage, the word 'carborundum' is often used synonomously with silicon carbide. However, the word 'carborundum', when capitalized, is a trade-mark name used for silicon-carbide abrasives manufactured by the Carborundum Company.

In Figure 2501 it will be noted that loose grinding abrasives are divided into three classifications—coarse, medium, and fine—which are determined by the approximate average particle size. The procedure for determining particle sizes down to approximately 0.0009 inch are given in National Bureau of Standards Bulletin #118.* Smaller sizes, from approximately 0.0009 to 0.0002 inch, are determined by microscopic measurement. Abrasives in the coarse and medium classifications in Figure 2501 are those used for rough grinding, those in the fine classification are those used for fine grinding. Nomenclature of grinding abrasives, as sold by various manufacturers, is not standardized. However, in Figure 2501 a scheme of standardization based upon abrasive material and particle size, and covering most grinding abrasives in general use is presented. In this figure the different abrasives are arranged so that the one with the largest particles is at the top and those composed of successively smaller particles are listed in sequence to the bottom. The particle size of each separate type of material is listed in the same column both above and below the name of the material. Since coarse abrasives, 60 to 220 grit size, may be secured from almost any abrasive manufacturer by specifying the desired material and grit size, they are not broken down under the names of the manufacturer. In the case of medium and fine abrasives, however, a breakdown is desirable because each size and material may have a different designation by each manufacturer, and in at least one case, the same manufacturer

*U.S. Dept. of Commerce. *National Bureau of Standards Bulletin #118.* Washington: U.S. Government Printing Office, (latest issue). For sale by the Superintendent of Documents, Washington, D.C.

TABLE OF LOOSE GRINDING ABRASIVES

ABRASIVE	APPROXIMATE AVERAGE PARTICLE SIZE INCHES	MICRONS				MANUFACTURER'S DESIGNATION
Coarse	.0117	297	297			60 grit
	.0098	250	250			70 grit
	.0083	210	210			80 grit
	.0070	177	177			90 grit
	.0059	149	149			100 grit
	.0049	125	125			120 grit
	.0039	100	100			150 grit
	.0035	88	88			180 grit
	.0029	74	74			220 grit

All coarse abrasive grit sizes are standardized by the U. S. Department of Commerce, National Bureau of Standards (Simplified Practice Recommendation No. 118).

Available from almost any abrasive manufacturer.

		ABRASIVE TYPE: Synthetic Aluminum Oxide	Silicon Carbide	Corundum	Domestic Garnets	American Optical	Barton Mines	Bausch & Lomb	Carborundum Company		Optical Powder	Continental Optical	General Abrasive	Norton Company	J. H. Rhodes	Titmus Opt. Fine Emery
Medium	.00197	50							F					F		
	.00177	45												FF		
	.00122			31				#500								
	.00118	30	30						FF	#320				#320		
		30											XF			
	.00102	26	26							#400				#400		
		26											FFF			
				26				#600								
	.00098	25											FFFF			
					25		W2									
	.00091	23												FFFF		
	.00089	22½									#225					
	.00087	22										#2				
				22		#302										
	.00079	20	20							#500				#500		
		20							FFF		#200					
				20				#750								
					20		W3									
Fine	.00075	19											#24			
	.00071	18										#2½				
				18		#302½		#850								
	.00069	17½									#175					
	.00067	17											#21			
	.00065	16½														2X
	.00063			16				#950								
	.00061			15½				#1000								
					15½		W4									
	.00059	15										#3	#18		#1015	
				15		#303										
	.00057	14½									#145					
	.00055				14		W5									
	.00053	13½														3X
				13				#1150								
	.00050			12½				#1200								
	.00049	12½									#125					4X
	.00047	12													#1012	
	.00043	11										#3½				
				11		#303½										
					11		W6									
	.00039				10		W7									
	.00037	9½									#95					
				9½				#1600								
	.00035	9													#1009	
	.00031			8		#304										
	.00030			7½				#2100								
	.00024			6				#2600								
	.00020			5		#305										

Note: 1 micron = 0.001 mm. 2.54 microns = 0.0001 inch

Figure 2501.

has two different designations for the same type and size abrasive. Consequently, to the right of the columns showing the medium and fine abrasive types and sizes is a column for each abrasive manufacturer, in which is listed the trade name of each abrasive. Due to this arrangement, abrasives of the same material and the same particle size are listed together with the variant trade appellations of the manufacturers from whom they may be obtained.

The procedure for making coarse abrasives of approximately 60 to 220 grit size from any of the materials listed is the same. The abrasive is crushed, and is then graded by means of cloth or wire sieves of standard sizes.

All fine abrasives, having a particle size of approximately 0.00075 inch or less, are processed by grinding in ball mills and sedimentation in water.

Medium abrasives, having a particle size of approximately 0.00197 to 0.00079 inch, are made by both of the methods described above.

In addition to particle size, other factors such as hardness, particle shape, and impurities affect the properties of an abrasive. In general, slivers or plate-like particles are to be avoided in fine abrasives. This is one reason that ball mills rather than crushers are used for grinding fine abrasives. The former promote compact particles which are desirable. The latter produce many slivers which are undesirable.

Many abrasives are reclaimed from optical grinding processes. Such materials usually contain from 10 to 30 per cent of glass and varying per cents of iron, pitches, and waxes. It is advisable to keep the iron and pitch contents as low as possible, but a reasonable amount of glass does not seem harmful. In fact, it is claimed that a smoother fine-grinding job is obtained if the suspension is kept alkaline, and this condition is nearly always met when there is a lot of finely-divided glass in the abrasive. It has been claimed that the addition of other products to finishing abrasive suspensions aid in producing smoother finer-ground surfaces. Some materials used for this purpose are talc, lampblack, glycerine, alcohol, and soaps, but none of them are widely used.

Silicon carbide grinds somewhat faster than aluminum oxide, but due to its harder nature, it will invariably produce a rougher surface than aluminum oxide of the same particle size. Therefore, although it has gained much favor in rough grinding, it is never used for fine grinding of precision optical glass.

Brush Surface Analyzer. — Figure 2502 shows graphs of surfaces produced by milling glass with diamond-impregnated or silicon-carbide abrasive wheels, and by grinding glass with various types of abrasives. These graphs were made on a Brush surface analyzer which operates by dragging a sapphire needle over the surface to be tested. The irregularities of the surface are electrically amplified and recorded by a needle on a moving graph paper.

Levigated Alumina.—Levigated alumina is a very finely-divided aluminum oxide averaging about 2 microns in particle size. It has been found useful at Frankford Arsenal as an aid in honing tools used to cut silver films on ocular prisms. (See Chapter 18.) It may be obtained from Norton Company, Worcester, Massachusetts.

COOLANTS

Coolants can be divided into two classes, namely, water and soluble oils. In general, the cooling effect depends more on the volume of coolant that is used than on the pressure under which it is applied. It is necessary, very often, to dilute a soluble oil as furnished by the manufacturer, the amount of dilution varying with the make and the purpose for which it is to be used. A few soluble oils are listed in the table given in Figure 2503, together with some dilutions that are effective when used with various machines.

POLISHING ABRASIVES

The function of the polishing materials in the polishing operation is to change the glass surface from an irregular aggregate of hills and valleys to a smooth surface without scratches or stains. In use, the polishing material is usually mixed with water to form a paste and is applied as discussed in Chapters 11, 12, and 22. While the exact manner that the glass

CHART OF BRUSH SURFACE ANALYZER GRAPHS FOR GROUND GLASS SURFACES

NO.	ABRASIVE TYPE	BOND	MICRONS	MANUFACTURER'S DESIGNATION
1.	Diamond (100 Concen-tration)	Metal	80-160	120 grit
2.			60-120	180 grit
3.			35-85	240 grit
4.		Resinoid	13-37	400 grit
5.	Silicon Carbide Synthetic Aluminum Oxide	Resinoid	74	220 grit
6.		Loose	250	70 grit
7.			100	150 grit
8.			74	220 grit
9.			30	FF
10.			20	FFF
11.			16½	2X Fine Emery
12.	Corundum	Loose	15	#303
13.			[illegible]	#1600

BRUSH SURFACE ANALYZER GRAPH

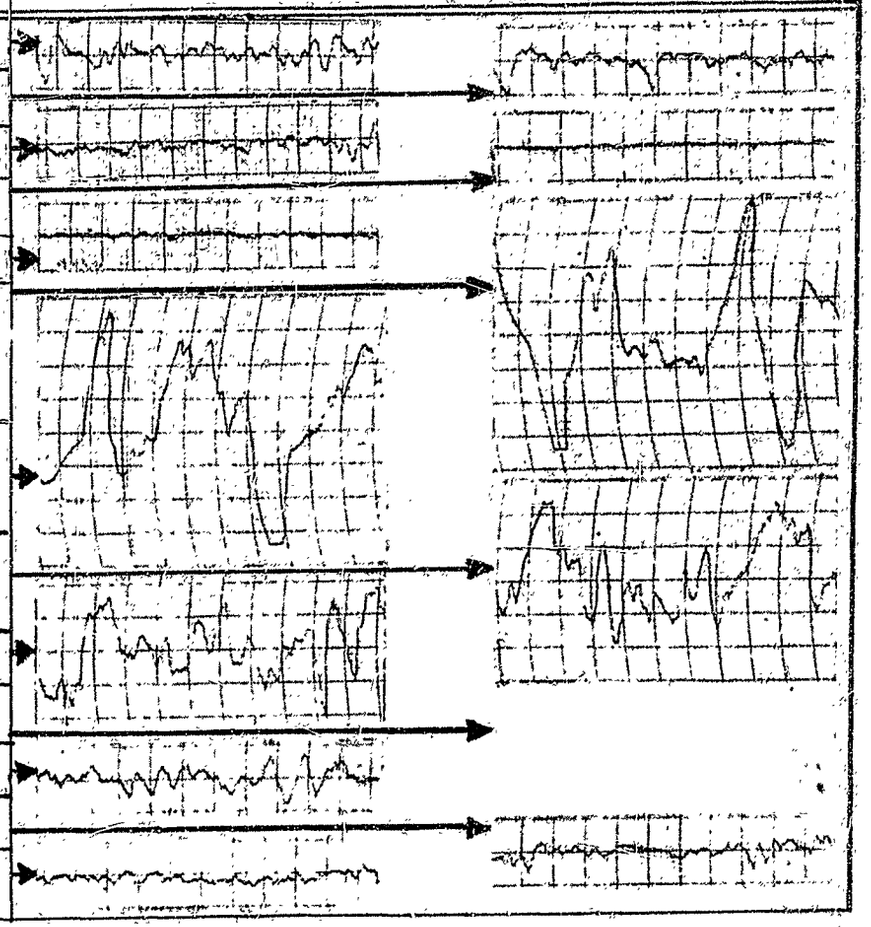

Figure 2502.

TABLE OF SOLUBLE OILS USED WITH COOLANTS

COMPANY	NAME	DILUTION RATIO			
		SAW	SURFACE GRINDER	CYLIND. GRINDER	CURVE GENER-ATOR
Atlantic Refining Company	Soluble Oil				
D. C. Cooper Company	D. C. Soluble Oil, or D. C. Liquid Cutting Compound		7–1		
Diversey Corporation	Diversey Cutting and Grinding Compound		300–1		
E. F. Houghton and Company	Hocut #60		200–1	20–1	80–1
	Permasol	20–1			
International Chemical Company	International Compound #122	20–1	200–1	20–1	80–1
Quaker Chemical Company	Quaker Cut #101	20–1	200–1	20–1	80–1
Standard Oil Company	Soluble Oil				
D. A. Stuart Company	Codal				
Sun Oil Company	Soluble Oil				

Figure 2505.

surface is smoothed by the polishing material is not completely known, some facts that have been established fairly well are, first, that an appreciable amount of material is removed during the process and, second, that the performance of the abrasive is effected by the acidity or alkalinity of the paste, as well as by certain types of dissolved electrolytes in the paste. Although some rouge pastes will polish satisfactorily with a $_pH$-value that ranges from 3 to 8, others must be kept between 3 and 5. Staining is almost certain to occur if the $_pH$-value falls below 3 or rises above 8. Although any soluble acid can be used to adjust the $_pH$-value, citric and acetic acids seem to give the best results. Usually stain appears as a thin colored film, but sometimes it is so slight that its only effect will be to cause the fringes when examined with a test glass to appear fuzzy or wavy. Without close examination, this latter indication can be interpreted erroneously as an indication of a badly-scratched surface.

Choice of Polishing Abrasives.—In selecting a polishing abrasive it must be remembered that the purpose is to produce a satisfactory surface on the glass in the shortest time. While some may give good results on some types of glass, it may be necessary only to change machine adjustments or some working conditions to secure equally-acceptable results with others. In general, therefore, the simplest and most effective method for testing the effectiveness of polishing abrasives is to observe their performance in the shop in which they are to be used.

Ferric Oxide.—While rouge should have as few impurities as practicable, it is the particle size of the insoluble impurities such as silica or aluminum oxide that causes the rouge to scratch the glass. That is, a rouge that contains 5 per cent of silica in small particles will not scratch as much as one which contains 0.5 per cent of silica in large particles.

Rare Earths.—Because of the development of polishing abrasives containing cerium oxide and other rare earths, the use of ferric oxide as a polishing abrasive is becoming somewhat less important.

Cerium Oxide.—This material, in the form of ceric oxide, is used by some operators. When

it is used properly with higher polishing-machine speeds and pressures, it often polishes about 50 per cent faster than ferric oxide. One grade can be obtained from Lindsay Light and Chemical Company, Chicago, Illinois.

Barnesite.—This abrasive, as made by W.F. & John Barnes Company, Rockford, Illinois, is a mixture of cerium oxide and several other different elements, and has a specific gravity of from 5.3 to 5.4. It differs from ferric oxide in that it has a pH-value of from 7 to 8 in the 'slurry' which rises to 11 during polishing, and a particle size of from 14 to 20 microns which breaks down to from 1 to 2 microns during the polishing operation. When used properly, it will reduce the polishing time about 50 per cent.

BLOCKING MATERIALS

Plaster of Paris.—See Chapter 9, *Blocking Flatwork.*

Blocking Adhesives. — Various adhesive waxes are used to hold optical elements to each other or to a blocking fixture during the different processing operations. With the exception of plaster of paris, which is not a wax and which is discussed earlier in the text as noted above, these waxes are all thermoplastic and may be divided into three classes, see Figure 2504.

One class includes those waxes which are used to hold elements very close to the block on which they are to be mounted and the surface of which is complementary to the block itself. This class of adhesives is used in comparatively thin films. Another class consists of adhesives that are used in slightly heavier films up to about 1/16-inch thick. A third class is used to hold glass at some distance from the surface to which it is attached, *e.g.*, for blocking lenses for grinding and polishing. This last class, which must be very rigid so that the elements will not move during processing, are often called sealing waxes. They consist of a mixture of rosin or carnauba wax, a filler such as clay, and an adhesive such as shellac, petroleum, or coal tar asphalt.

Formulas for various class 1, class 2 and centering adhesives which can be made in any optical shop are given in Figure 2504.

Class 3 and centering waxes can be purchased in the open market from the sources indicated.

POLISHING PITCHES

The function of the polishing pitch is one of the most important factors connected with polishing. It must be soft enough so that it will not scatch the glass and, at the same time, must provide a surface that is firm enough to polish the glass to the desired curve or flatness. Polishing pitch must have the important property of being able to 'flow' within the range of polishing temperatures, approximately 60 to 140°F., without sacrificing its quality of firmness. This flow, which affects the curvature of the surface of the polishing pitch on the polishing tool, is under the control of the operator at all times, and the skilled worker depends on this property to a very large extent to secure the surface that is desired.

Polishing pitches are made from mixtures of two general types of raw pitches known as 'resinous' and 'asphaltic'. The resinous pitches come from the Norway spruce and other evergreens, and range from about the hardness of rosin down to much softer materials. Such pitches are frequently called 'Swedish', 'Norwegian', or 'Burgandy' pitches, although all now come from domestic sources. The asphaltic pitches are mainly derived from petroleum refining processes.

Both resinous and asphaltic pitches can be obtained in a wide range of degrees of hardness, so that by mixing them carefully a polishing pitch can be made with any desired hardness. In addition to the two principal ingredients, some operators use some proportion of other materials, such as beeswax, paraffin, ceresin wax, pine tar, coal tar pitch, beechwood pitch, wood flour, and fibre.

No specific formulas for making polishing pitch are given because such a wide range of usage is necessary, and because each formula must be adjusted to local shop conditions, the kind and precision of surface that is desired, and the operating procedures that are used by the worker.

TABLE OF BLOCKING WAXES USED AT FRANKFORD ARSENAL

CLASS	NAME	SOFTENING POINT	SOURCE* AND TRADE NAME	DESCRIPTION OR COMPOSITION	PREPARATION	USE
0 (basic component)	Rosin	160°F.	(standard product)	W.W. Gum Rosin	Basic component used to make blocking waxes	
	Carnauba wax	182°F.	(standard product)	Grade #1, #2, or #3		
0+1	Amorphous petroleum wax	170°F.	B: Barnsdall wax S: Cerelene wax M: Cerese wax	Amber grade	Melt and strain	2nd side rough grind (surface grinder)
	Yellow beeswax	150°F.	(standard product)	Semi-refined crude beeswax	Melt and strain	2nd side rough grind (hand grind), stacking
1 (close contact)	1st side reticle wax	158°F.	(mixture)	Yellow beeswax (16) Carnauba wax (1)	Mix, melt and strain	Reticle blanks (1st side fine grind and polish)
	2nd side reticle wax	165°F.	(mixture)	Rosin (7) Amorphous petroleum wax (3)	Mix, melt and strain	Reticle blanks (2nd side fine grind and polish)
2 (medium thickness films)	Stickum	133°F.	(mixture)	Yellow beeswax (1) Rosin (3)	Mix, melt and strain	Pressings (1st side rough grind)
3 (rigid holding)	Backing wax	190°F.	D: Formula No. 1000-20-4 P: Bankers Special wax	Shellac (flake) 14–16% Plasticizer (*e.g.*, natural resin or castor oil products) 30–32% Filler (*e.g.*, clay, gypsum) 50–52% Pigment (*e.g.*, lampblack) 2–4%	Ready for use	Lens blanks (pitch buttons), stacking small pieces
	Centering wax	171°F.	U: Black Shellac wax—Bulldog Quality	Shellac (flake) 23–25% Plasticizer 33–35% Filler (fine) 39–41% Pigment 2–4%	Ready for use (maintain coolant water at 75°F.)	Centering, blocking
	Ceresin wax	141°F.	(standard product)	Neutral—natural	Ready for use	Coating before plaster blocking
	Flexowax C	152°F.	G: Flexowax C	Neutral—processed	Ready for use	

* B=Bareco Oil Co., Barnsdall, Okla.
D=Dennison Mfg. Co., Framingham, Mass.
G=Glyco Products Co., Brooklyn, N. Y.
M=Socony-Vacuum Oil Co., New York, N. Y.
P=Princeton Sealing Wax Co., Princeton, Ill.
S=Stevenson Bros. Co., Philadelphia, Pa.
U=Universal Shellac & Supply Co., New York, N. Y.

Note: Numbers in parentheses in "Description or Composition" column denote parts by weight.

Figure 2504.

Method of Standardizing Polishing Pitches.—A successful method of standardizing polishing pitches has been developed at Frankford Arsenal. This method employs a modification of the McBurney Indentation Tester,* used for determining the hardness of asphalt tile. The modification consists of replacing the 30-pound weight and ¼-inch ball with a 6¾-pound weight and a 1-inch ball. This modification is necessary because polishing pitches are considerably softer than asphalt tile. However it is necessary, at times, to use a smaller ball with the harder polishing pitches. The hardness is measured by observing the rate of penetration of the ball into a sample of pitch. The instrument is illustrated in Figure 2505.

In using the instrument, the sample is prepared in the form of a cast circular disk, with a convenient diameter and a thickness of 1 inch, resting on a circular aluminum plate. The thickness should be kept within $\pm 1/16$ inch, because a greater variation affects the indications of the instrument. To obtain dependable results, the sample and the instrument should be immersed up to the water line, see Figure 2505, in a thermostatically-controlled water bath at 26°C. for from 3 to 12 hours or longer. To make the test, the sample disk is placed on the stage of the instrument which is then raised until the upper surface of the sample is within 0.002 to 0.003 inch of the bottom of the ball, when it is clamped in position. Next the hand wheel is turned clockwise through one turn until the ball rests on the sample. After this, the dial gage is set to zero, the hand wheel is turned two or three more turns which allows the full weight of the plunger and ball to rest on the sample, and the time is noted, usually with a stop watch. Indentation readings, as shown on the dial gage, are recorded every 15 seconds for 5 minutes, except in the case of very hard or very soft pitches, when it may be advisable to change the time interval. Usually the amount of indentation at the end of 3 minutes is used as the indication of the hardness of the pitch being tested. The table in Figure 2506 gives typical results obtained from testing samples of pitch used for various purposes, and also results of a soft and a hard pitch as received from the manufacturer.

Another characteristic of a pitch mixture is its tendency to become harder when it is reheated. The amount of this hardening can be determined by re-heating a mixture and testing it again.

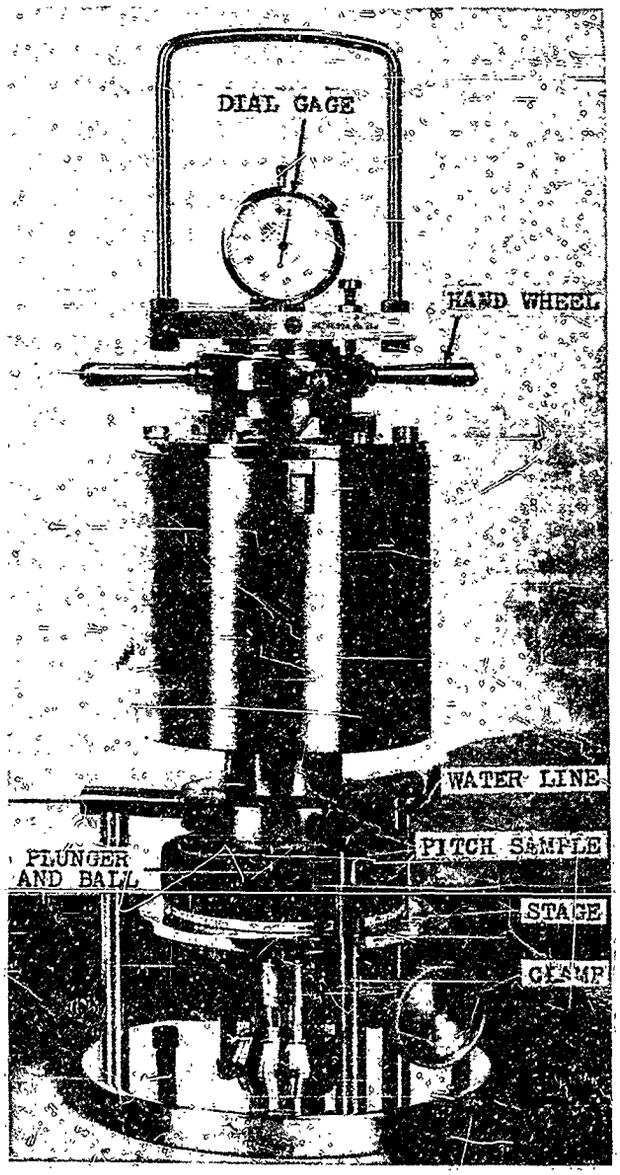

Figure 2505.—Modified McBurney Indentation Tester Used for Measuring Hardness of Polishing Pitch.

*McBurney, J. S. *Indentation of Asphalt Tile.* A.S.T.M. Proceedings, vol. 34, part II, pp. 591–606. 1934

TABLE OF TYPICAL PITCH STANDARDS

TIME Minutes and Seconds	PITCHES USED FOR POLISHING LENSES					RETICLE PITCH ***	SPECIAL VERY SOFT OCULAR PRISM PITCH ****	HARD PITCH* AS RECEIVED (½-in. BALL 40°C.)	SOFT PITCH AS RECEIVED
	H	MH	M**	MS	S				
15"			2.5	5.0	7.5	11.0	12.0	3.5	15.5
30"			3.5	8.0	13.0	18.0	20.5	4.5	23.0
45"			4.5	11.0	17.5	24.0	27.0	5.5	28.5
1'	1.2	3.0	5.5	13.2	21.5	30.0	34.0	6.5	34.0
15"			6.5	15.5	25.0	35.0	40.0	7.5	39.0
30"		4.0	7.0	17.5	28.0	40.0	45.5	8.5	43.5
45"			8.0	19.7	31.0	44.5	50.0	9.5	48.0
2'	2.0	5.0	9.0	21.5	34.0	48.0	55.0	10.5	52.0
15"			9.5	23.2	37.0	55.0	59.5	11.5	56.0
30"		6.0	10.0	25.0	40.0	56.5	64.0	12.5	60.0
45"			11.0	26.0	42.5	60.0	68.0	13.0	63.0
3'	3.0	7.0	12.0	28.0	45.0	64.0	72.5	14.0	67.0
15"			12.5	30.0	47.5	67.0	76.0	14.5	70.0
30"		8.0	13.0	31.5	49.5	71.0	80.0	15.0	73.5
45"			14.0	33.0	52.0	74.0	84.0	15.5	76.5
4'	3.5	9.0	14.5	34.0	54.4	77.0	87.5	16.5	79.5
15"			15.2	35.5	57.0	80.0	90.0	17.0	82.5
30"		9.5	16.0	37.0	59.0	83.5	93.5	17.5	85.5
45"			17.0	38.5	60.3	86.0		18.0	88.0
5'	4.0	11.0	17.5	40.0	61.0	89.0		19.0	91.0

Symbols Denoting Hardness of Pitches Used for Polishing Lenses	Allowable Indentation Range at 3 Minutes
H = Hard	3.0 - 3.5
MH = Medium Hard	6.0 - 7.0
M = Medium	12.0 - 14.0
MS = Medium Soft	24.0 - 28.0
S = Soft	45.0 - 56.0

* This pitch is received too hard for standard test conditions.

** This pitch is also used for polishing prisms.

*** This pitch contains pine tar.

**** This pitch contains beeswax.

The elapsed time from the moment of placing the weight on the sample is shown in the first column. Numerical values listed in the other vertical columns indicate indentation in thousandths of an inch at center of a pitch casting 1-inch thick and 4 inches in diameter, using a 6 3/4-pound weight acting on a 1-inch diameter steel ball.

Figure 2506.

PROTECTIVE COATING MATERIALS

In processing an optical element, it is frequently necessary to apply a coating to protect a finished polished surface from abrasives, rouges, and other materials that are being used to process other surfaces. Such protective coatings should be easy to apply and to remove, and they must adhere to, protect, and not injure the polished glass surface. Fast-drying substances are desirable for all production work.

Shellac dissolved in ethyl alcohol adheres to a polished glass surface better than any other material and is used most frequently, but lacquers based on nitrocellulose, cellulose, acetate, vinylites, and furfural resins are sometimes used. All these coatings will dry in about 15 minutes. Bitumen paints based on asphalt adhere very well, but take a long time to dry and, in addition, they usually contain considerable abrasive filler which may harm the glass surface if great care is not observed during cleaning. Ordinary oil paints and enamels require too long to dry, and are therefore seldom used. Elements imbedded in plaster blocks are difficult to protect because of the tendency of water to seep between the coating and the glass, and thus cause stains that are hard to remove. While shellac adheres very closely to the glass, it is not impervious to water. For this reason many operators apply a coat of lacquer or ceresin wax on top of the shellac to seal it against water. In some cases, molten waxes may be used alone to protect a surface, but in many instances they are not sufficiently tough, while in other cases they may weaken the hold of the plaster.

A fast-drying black lacquer with which Frankford Arsenal has had considerable success in protecting prisms of barium crown glass from staining has the following formula:

Polystyrene (trade name 'Laolin') (Catalin Corp., N.Y.)	30 grams
Flexalyn (Hercules Powder Co., Wilmington, Del.)	60 grams
Lampblack	20 grams
Benzol	approximately 300 grams

The lacquer can be made by dissolving the polystyrene in benzol, and then placing all of the ingredients in a ball mill and grinding for 12 hours; or by grinding the lampblack into hot flexalyn and then dissolving in some of the benzol, dissolving the polystyrene in twice its weight of benzol, and then mixing both solutions and adding the remaining benzol. This lacquer seems to give better results when applied in two thin coats, rather than in one thick coat.

For dry polished surfaces that are not to come into contact with water, nitrocellulose lacquers give good results and may be easily removed by soaking in water. Special types of transparent cellulose tape, usually with cloth backings, have also been used successfully for protecting dry polished glass surfaces.

A clear lacquer, called 'Zapon Cotite', is made by the Zapon Division of the Atlas Powder Co., Stamford, Conn. A black lacquer called 'Duco #246–3312—commercial grade', is made by the E.I. Dupont de Nemours Co., of Wilmington, Del.

OPTICAL CEMENTS

In the manufacture of optical elements, it is often advantageous to cement together two or more elements with complementary surfaces. The reasons for this are indicated in Chapter 20. The characteristics of different types of cements used for this purpose are discussed below.

Certain qualities are requisite in any optical cement. It must adhere firmly to the polished glass surfaces, be substantially clear and free of color and solid particles, and have a refractive index close to that of one of the glasses to be cemented. It must be stable to light, water, and to the highest and lowest temperatures to which the instruments in which the elements are placed are to be subjected. It should be easy to apply, and must be sufficiently cohesive to unite the elements firmly. It must usually be safely removable so that, in case of scratching, chipping, or other damage to one element, the combination may be decemented and repaired.

Canada Balsam.—Until recently Canada balsam was the only optical cement used, and

it is still widely employed. It is a resinous substance obtained from the balsam fir tree, *Abies Balsamea*, which is native to the northeast United States and Canada. Balsam is usually marketed as a thick, syrupy liquid (viscosity 1200 to 2400 centipoises) composed of a mixture of at least two solid resins and various volatile liquids called 'turpentines'. The proportion of solid material to turpentines may differ, depending upon the origin of the balsam, weather factors, and the treatment it receives by the gatherer. It averages about two parts of resin to one part of turpentine. The refractive index of Canada balsam is usually between 1.53 and 1.54.

Before the balsam is used for cementing, it is purified. All dirt is strained out and any water is removed. The balsam is seldom used in its original liquid state, but has been used in this manner when the completed element is to be subjected to very cold temperatures. In this case, the soft balsam is applied and the element is secured in a clamp and baked for several days. This produces a thin, hard film of balsam around the edge of the cemented surfaces and leaves a soft, pliable center.

Usually the balsam is heated to drive off part, or all, of the turpentine before it is used as a cement. When handling large amounts of balsam, the evaporation must be performed under reduced pressure to prevent discoloration from the high heat. Operating under reduced pressure, it is possible to produce solid balsam suitable for cementing precision optical elements.

By another process the turpentine is evaporated from a thin film of the liquid balsam just prior to cementing. A little balsam is poured into the concave element and cooked on a thermostatically-controlled hot plate until it is just solid. At this point the elements are cemented. (See Chapter 20.)

Synthetic Cements. — A number of synthetic cements have been developed recently to compensate for some of the shortcomings of Canada balsam. Among the shortcomings of Canada balsam are its tendency to yellow and become somewhat harder through loss of volatiles upon prolonged heating in air, and the limited resistance of optical elements cemented with it, to heating and chilling. The nature of synthetic cements makes it convenient to group all optical cements into three categories — thermoplastic, thermosetting, and pure butyl methacrylate, as noted in Chapter 20. (See Figure 2001.)

Thermoplastic Cements.—The word 'thermoplastic' indicates plasticity caused by application of heat. Canada balsam falls into this category; although balsam becomes somewhat harder after prolonged heating in air due to loss of volatiles, it is always easily capable of being remelted. Another thermoplastic cement is a mixture of diethylene glycol abietate and pentaerithrytol abietate. This material is a true thermoplastic and may be subjected to prolonged heating in air without noticeable deterioration. Its thermal resistance when cemented in optical elements is about the same as that of Canada balsam. Other thermoplastic cements have been produced by polymerizing non-thermoplastics dissolved in thermoplastics. This procedure has been used to fortify the properties of the thermoplastic resin—usually to increase its resistance to heat or cold.

In recent years there has been considerable development of cements which are polymerized in the optical elements during cementing. These cements offer resistance to both heat and cold which is superior to any thermoplastic material which can be conveniently melted and used for cementing optical elements.

Thermosetting Cements.—The word 'thermosetting' indicates loss of plasticity from application of heat. During heating, the cement 'sets', *i.e.*, changes from a liquid to a solid. After the set, or polymerization as it is properly called, a thermosetting cement is not thermoplastic. Continued heating at much higher temperatures than those used to set the cement will not melt it. Thus the hardening is irreversible. Thermosetting resins when polymerized are insoluble in all solvents excepting such substances as cause the polymer to decompose chemically. They are also infusible, although temperatures high enough to decompose them will cause depolymerization or chemical decomposition, or both.

Thermosetting cements are used as liquid monomers, or as partial polymers in the form

of liquids or soft gels. After application to the optical elements in the standard manner described in Chapter 20, the elements are baked to harden the cement.

As noted in Chapter 20, true thermosetting cements are characterized by two double-bonds per monomeric molecule. In the case of a mixture, as distinguished from a pure monomer, one of the constituents must have more than two double-bonds per monomeric molecule.

All heat-setting optical cements harden by true polymerization of the 'vinyl' type, which is based on double-bond reaction. There are other types of thermosetting resins which set to insoluble, infusible solids but these other types all give off by-products, usually water, in setting. They are therefore unsuitable for optical cements. All true thermosetting materials are characterized by a three-dimensional structure of the polymer.

By referring to Figure 2001 it can be seen that there are four optical cements of the thermosetting type which have been used successfully for precision optical cementing. These cements are PKR–15 based on the CR–39 monomer, UV–101 and field cement based on Laminac 4122, and HE–5 which is a mixture of butyl methacrylate with a cross-linking resin containing two or more double-bonds per monomeric molecule.

CR–39 is a clear water-white resin of low viscosity. The formula of its monomeric molecules is $(CH_2{=}CH{-}CH{-}CO{-}O{-}CH_2{=}CH_2)_2O$. Laminac 4122 is a clear, amber-colored liquid with a viscosity of about 5 poises. It is composed of a mixture of styrene with an alkyd resin which has two or more double-bonds per molecule.

Pure Butyl Methacrylate Cements.—Pure butyl methacrylate cements have some properties in common with both thermoplastic and thermosetting cements. Cements of this type are made and applied in the same manner as thermosetting cements, *i.e.*, a liquid cement is applied to the optical elements which are then baked to harden the cement. However, due to the fact that butyl methacrylate has but one double-bond per monomeric molecule, its polymers are always linear rather than three dimensional in nature. Thus the solidified cement is both soluble and fusible, although it does not become very soft and approach a liquid state until heated to temperatures of 400 to 500°F.

Preparation and Handling of Thermosetting and Pure Butyl Methacrylate Cements.—In all cases it is necessary to add a peroxide accelerator to thermosetting and butyl methacrylate cements to enable them to polymerize properly when baked for 2 to 4 hours. The accelerator used with butyl methacrylate cements, CR–39 cements, and HE–5 is benzoyl peroxide, a white crystalline powder. UV–101 uses either the lauoryl peroxide, which is similar in appearance to benzoyl peroxide, or tertiary butyl hydroperoxide, a clear, water-white, volatile and odoriferous liquid peroxide. The accelerator used with field cement is ditertiary butyl peroxide which is also a liquid, and similar in appearance and odor to tertiary butyl hydroperoxide.

All pure butyl methacrylate cements and some thermosetting cements are partially polymerized before use. This procedure has the triple function of reducing the amount of polymerization shrinkage that takes place when the cement is baked in the lens, shortening the baking time, and increasing the viscosity of the monomer to a value which is easier to work with in applying the cement to the lens. CR–39 Cements (PKR–15), all pure butyl methacrylate cements, and HE–5 are always partially polymerized before use as lens cements. Although it is possible to partially polymerize cements based on Laminac 4122, the shrinkage of this material is enough less than that of the others mentioned above so that it is safe to use it without pre-polymerization. For this reason and because it is not so convenient to partially polymerize Laminac 4122, UV–101 and field cement (which are based on Laminac 4122) are not usually partially polymerized before use.

Thus CR–39, pure butyl methacrylate, and HE–5 cements are made by partially polymerizing the monomeric resin and stopping the polymerization at an appropriate point. This point is usually the maximum degree of polymerization which can be carried out and still have the polymer liquid enough to be useful as a cement. If cements have to stand shipment

or storage before use, it may be necessary to cut down the amount of polymerization slightly to allow for the polymerization which may take place under these circumstances.

Partially polymerized resins must be kept cool from the time of partial polymerization until just prior to use, because in the partially polymerized state they are very reactive and if they are stored at room temperature for a few hours, or at most a few days, they will solidify and become useless for optical cementing.

The procedure for making the partially polymerized cement is similar for both normal butyl methacrylate, CR–39, and HE–5. First the purity of the monomer is ascertained. The CR–39 may be shipped and stored at normal temperatures without affecting its use in preparing a thermosetting cement. Normal butyl methacrylate must be shipped cold or with an inhibiter dissolved in it. Hydroquinone is the usual inhibiter, and if it has been used, the methacrylate must be distilled away from it by vacuum distillation. The pressure it not critical; 20 to 30 mm of mercury is suitable. An accelerator is dissolved in the monomer. In all cases the accelerator is benzoyl peroxide, and considerable mechanical agitation may be necessary to dissolve it. The amount of accelerator used varies with different manufacturers, but in all cases the quantity used is believed to be in the range of $\frac{1}{10}$ per cent to 3 per cent by weight.

After the benzoyl peroxide has been dissolved, the mixture is filtered to remove any impurities or undissolved materials. This is usually accomplished by suction or pressure filtration through a filter with very fine pores. A medium fritted glass filter and very fine silk cloth have both been used successfully.

The actual polymerization is effected by heating. Both continuous and batch processes have been employed, but if the latter is used, small containers are recommended because a much more uniform distribution of heat is obtained.

The molecular weight distribution of the partially polymerized product is believed to be very important. Theory indicates that a fairly uniform molecular weight is superior to a wide molecular dispersion with mixtures of very large and very small molecules. Fairly rapid heating to as high a temperature as is safe for the specific composition followed by quick cooling when the cement has reached the desired viscosity seems to produce the best results.

It should be understood that it requires care to produce a good thermosetting cement. and that the cleanliness of operation, the amount of peroxide used, time and temperature of heating, rapidity of cooling, size of batch, and other factors must be carefully controlled to produce the desired product. It is believed that optical manufacturers who do not have chemical laboratories and chemically-trained personnel at their disposal should buy their thermosetting cements rather than try to make them. The problem of making good thermosetting cements should be fairly easy for a competent chemical laboratory.

Because of the contraction taking place when heat-setting resins are polymerized and also in order to speed cementing procedures, it is advisable to polymerize pure butyl methacrylate and thermosetting cements to as great a degree as is possible, consistent with the requirements of use and necessary shipment or storage after manufacture. The heat-setting cements used currently contract about 10 per cent on solidifying. Contraction of over 10 per cent must be considered dangerous and likely to set up strains and warp the surfaces of the lenses or other optical elements.

Normal butyl methacrylate polymerizes by becoming increasingly viscous and sticky, and finally solidifies to a somewhat rubbery solid. CR–39 and HE–5 increase in voscosity during polymerization much more slowly than pure butyl methacrylate, but pass through a gel stage just prior to solidification. The maximum viscosity which has proved practicable to employ with butyl methacrylate is about 32 poises; CR–39 and HE–5 may be taken to the soft gel stage and used in this viscosity effectively. The jelled CR–39 and HE–5 usually have viscosities somewhat softer than that of ordinary fruit gelatine. Either product must be shipped and stored at 30°F. if it has been taken to the maximum viscosity. Butyl methacrylate and HE–5 must be kept cool in any state of polymerization, but CR–39 which has

not reached the gel stage is more stable and will stand a week or two of storage at 75°F. The temperatures a cement will stand for various periods depends entirely upon its degree of polymerization. All optical cements are best shipped and stored in glass containers. It is definitely known that iron, lead, and copper have bad effects on CR-39, although tin does not appear to harm it. At any time after the benzoyl peroxide has been added, it is unwise to store CR-39 at temperatures below 30°F. because of the danger of freezing out solid benzoyl peroxide which will not re-dissolve and thus becomes a solid contaminant to the cement.

OTHER MATERIALS

A large number of materials not hitherto discussed in this chapter, are used in cleaning, engraving, etching, and coating optical elements, as well as in various stages of the manufacturing process. In general, the uses of these materials has been sufficiently covered in the text or else they are of such a nature as to need no discussion. In the following paragraphs, therefore, such materials are merely listed together with pertinent information as to the grade, type, or form which should be used. In addition, a key to the most pertinent applications are provided by chapter numbers included in parentheses. Due to this arrangement, it is possible to pick out the materials necessary for any specific procedure.

The meaning of abbreviations used are as follows: U.S.P.—Chemicals so marked fully meet the requirements of the United States Pharmacopoeia: C.P. signifies 'chemically pure'; VM & P signifies 'varnish maker's and painter's grade'.

Chemical Reagents

The grade and purity of all chemical reagents listed are in all cases sufficient for the purpose indicated. In certain instances experience may show that it is possible to use a reagent of less purity than that specified and thus to lower production costs or obtain certain substances more readily.

Acid, Acetic (CH_3COOH).—Glacial concentration, U.S.P. The acid is diluted with water to make solutions of the desired concentration (11, 23).

Acid, Boric, (H_3BO_3).—U.S.P. crystals (19).

Acid, Hydrochloric (HCl). — Reagent or C.P. grade, concentrated, specific gravity 1.18 (18, 23).

Acid, Hydrofluoric (HF).—For etching reticles U.S.P. or technical grade hydrofluoric acid is used. A 60 per cent solution is best for this purpose (17). For use in the production of pure magnesium fluoride, only the finest available hydrofluoric acid is used. A 48 to 82 per cent solution in a grade such as Baker's C.P. Special is ordinarily employed (19).

Acid, Nitric (HNO_3). — C.P. or reagent grade, concentrated, specific gravity 1.42 (17, 18, 19).

Acid, Sulphuric (H_2SO_4).—C.P. or reagent grade, concentrated, specific gravity 1.84 (18, 19).

Ammonium Hydroxide (NH_4OH).—C.P. or reagent grade, concentrated, 15 normal, specific gravity 0.90. The concentrated ammonium hydroxide may be diluted with water to any desired concentration less than 15 normal (17, 18, 19, 23).

Collodion (a variable mixture).—A commercial solution of nitrocellulose in alcohol and ether. Any of the standard solutions are suitable (18).

Copper Sulphate (Cupric) ($CuSO_4 \cdot 5H_2O$).—C.P. or reagent grade. Saturated solution may be made by mixing one part of crystals and two parts of water and agitating for 2 or 3 hours (18).

Magnesium Chloride ($MgCl_2 \cdot 6H_2O$).—Crystals should be purest grade available such as Baker's C.P. Special Crystals, low in Alkali salts (19).

Methyl Orange [$NaSO_3 \cdot C_6H_4N:N \cdot C_6H_4 \cdot N(CH_3)_2$].—Powder. 1 gram of the powder is dissolved in 1 liter of water to make methyl orange solution (23).

Potassium Hydroxide (KOH).—C.P. or reagent grade pellets. A saturated solution is

made by carefully mixing three parts of potassium hydroxide pellets with two parts of water and agitating for 30 minutes (18, 19).

Silver Nitrate ($AgNO_3$).—C.P. or reagent grade crystals (18, 19).

Soda Ash (Sodium Carbonate) ($Na_2CO_3 \cdot H_2O$).—U.S.P. Solutions of up to 25 per cent may be made by dissolving the powder in water (23).

Sodium Chloride (NaCl).—U.S.P. (19).

Sodium Citrate ($2Na_3C_6H_5O_7 \cdot 11H_2O$). — U.S.P. crystals (23).

Sodium Hydroxide (NaOH).—U.S.P. pellets. Solutions up to at least 30 per cent are made by dissolving the pellets in water (23).

Sodium Sesquisilicate ($3Na_2O:2SiO_2:11H_2O$). —Commercial grade granules (23).

Sodium Silicate (ratio $\frac{Na_2O}{SiO_2} = \frac{1}{3.22}$).—Commercial grade solution, specific gravity 1.38 (17).

Sugar, Cane ($C_{12}H_{22}O_{11}$). — U.S.P. crystals (18).

Titanium Dioxide (TiO_2).—Standard purified grade powder (17, 23).

Trisodium Phosphate ($Na_3PO_4 \cdot 12H_2O$). — Technical or commercial grade crystals (19).

Solvents

Acetone. — Commercial grade acetone is suitable for use as a general cleaning solvent. For cleaning optical elements before application of films or before inspection, it should be double distilled to assure freeness from dissolved solids (19, 23, 24).

Alcohol, Denatured.—See "Alcohol, Ethyl."

Alcohol, Ethyl. — Ethyl alcohol may be called 'pure grain alcohol' if pure, and simply 'denatured alcohol' if denatured. In all cases, the 95 per cent grade is adequate. Where the alcohol is used for general cleaning, or dissolving of shellac, or for wiping off blocks of glass during grinding, any commercial or denatured grade may be employed. For cleaning of polished surfaces before inspection, cementing, application of films, or filling of reticle lines, only a very pure grade of alcohol will function properly. Pure alcohol works very well, but is not always available. Most denatured alcohols do not do the job properly, but 95 per cent ethyl alcohol denatured with pure methyl alcohol is adequate for those uses where a very pure grade of alcohol is required (11, 12, 13, 15, 17, 20, 21, 22, 23, 24).

Alcohol, Isopropyl.—A high grade of purity is required wherever this material is used. A suitable isopropyl alcohol is the 99 per cent grade manufactured by Carbide and Carbon Chemical Company (17, 19, 23).

Alcohol, Pure Grain.—See "Alcohol, Ethyl."

Benzol.—Commercial grade benzol is suitable for general cleaning (23).

Carbon Tetrachloride. — A clean commercial grade of this material is adequate in all cases (18, 23).

Chloroform.—A clean commercial grade is adequate. Caution should be observed in handling this and all other chlorinated solvents (18).

Ether, Ethyl.—A C.P. grade should be used, especially where it is to be used to clean optical elements previous to making optical contact (23).

Gasoline.—Any standard, non-ethyl type is satisfactory (3, 4, 5, 9, 11, 23).

Kerosene.—Any standard commercial grade is satisfactory (23).

Naphtha.—Standard commercial VM & P naphtha is satisfactory (23).

Toluol. — A standard commercial grade is satisfactory (23).

Trichlorethylene. — A standard grade, if non-acid, is suitable for use in degreasers. Certain grades, which are inhibited against becoming acid, are superior but slightly more costly (23).

Turpentine.—A standard commercial grade is suitable (18).

Xylol. — A standard commercial grade is suitable (11, 18, 23).

Miscellaneous

Acetate Rayon Napkins.—The best lintless grade is satisfactory (19).

Aerosol, OT. — A detergent manufactured by American Cyanamid & Chemical Company. A solution can be made by dissolving it in water (19, 23).

Aluminum. — The purest aluminum available should be used for evaporated films. It can be used in the form of a wire about 1 mm in diameter (19).

Batiste.—Fine white, lintless. A satisfactory quality is 'White Rose Pattern' manufactured by A.E. Nathan Company, 119 Franklin St., New York City (17, 20, 21, 24).

Beeswax.—A pure white refined beeswax is used for the resist applied when engraving reticles. See also under "Blocking Adhesives," this Chapter (17).

Calcium Carbonate ($CaCO_3$).—Precipitated C.P. or reagent grade (18, 19, 23).

Celanese. — Celanese is a lintless acetate rayon. See also "Acetate Rayon Napkins" (17).

Celite.—A medium-fine diatomaceous silica product that is manufactured by Johns-Manville Company (19).

Charcoal. — Charcoal art pencils, specially prepared in stick or pencil form by any artist's supply manufacturer (23).

Cheesecloth.—Cheesecloth must conform to type 2 class A Federal Specification FED CCC-271. Cheesecloth conforming to this specification must be free of lint, warp 44, filling 40, soft finish (4, 5, 6, 7, 8, 9, 10, 11, 12, 13, 14, 15, 22, 23, 24).

Cloth, Soft. — See "Batiste," "Celanese," "Cheesecloth," and "Sylvet Cloth" (22, 23).

Copper. — The purest copper obtainable should be used for evaporated films. It can be used in the form of a copper wire about 1 mm in diameter (19).

Cotton, Absorbent. — Any clean standard commercial grade is satisfactory. The medicated type is not acceptable (10, 12, 18, 23, 24).

Cryolite.—Selected pure grade. May be obtained from Ward's Natural Science Establishment, Rochester, N.Y. (19).

Felt, Polishing Cloth.—A satisfactory quality is 'White Seymour Cloth' manufactured by Brown & MacTingue, New York City (7, 8, 11, 12).

Ferrosic Oxide (Fe_3O_4).—Powder, commercial grade, grit-free (17).

Halowax Oil. — Clear, practically water-white, refractive index n_D=1.634 at 25°C. (2).

Ink.—India or drawing ink with dense and very fine pigment particles. The product made by Higgins is satisfactory (15, 20).

Iron Oxide, Black Magnetic.—See "Ferrosic Oxide."

Lacquer, Black Waterproof. — See under "Protective Coating Materials," this chapter (20).

Lampblack.—A standard commercial grade is satisfactory. In filling etched lines in reticles, black magnetic iron oxide or manganese dioxide may also be used (17).

Lens Tissue. — See "Paper, Wiping," and "Paper, Wrapping" (13, 24).

Magnesia. — See "Magnesium Carbonate" and "Magnesium Oxide" (19).

Magnesium Carbonate ($MgCO_3$). — U.S.P. powder (19, 23).

Magnesium Oxide (MgO).—U.S.P. powder (19, 23).

Mineral Oil. — Clear, practically water-white, refractive index n_D=1.480 at 25°C. (2).

Monobromnaphthalene.—Clear, practically water-white, refractive index n_D = 1.655 at 25°C. (2).

Orvus Paste. — A detergent manufactured by Procter & Gamble. A solution can be made by dissolving it in water (19, 23).

Oil, Light Machine.—Any standard grade (9, 15).

Oil, Prime Lard.—Central specification, CS 1157 of 2/20/41 (18).

Paper, Black.—Black masking photographic, dull finish (20).

Paper, Filter. — Commercial grade, fast (18).

Paper, $_pH$ydrion. — Used for checking the hydrogen ion content of water and rouge in suspension. Distinct color changes are shown from $_pH$ 1 to $_pH$ 11. Manufactured by Micro Essential Laboratory, Brooklyn, N.Y. (11).

Paper, Standard Tissue.—See "Paper, Wiping" and "Paper, Wrapping" (11, 13, 15).

Paper, Wiping,—Wiping paper should conform to Federal specification FED UU-P-313a of 5/30/43 (13, 24).

Paper, Wrapping.—Wrapping paper should conform to Federal specification FED-1313 of 8/21/45 (13, 24).

Pumice Stone.—Standard commercial type (23).

Putty.—A satisfactory putty is made by mixing 17 pounds of whiting in ½ gallon of raw linseed oil (9).

Rouge, Black.—See "Ferrosic Oxide."

Silica. — See "Celite" and "Super Floss" (23).

Silver.—The purest silver obtainable should be used for evaporated films. It can be used in the form of a silver wire about 1 mm in diameter (19).

Soap, Water, and Ammonia Solution.—This solution is made by using 15 cc of liquid green soap, 30 cc of concentrated ammonium hydroxide, and 2 quarts of distilled water (24).

Sponge—Natural, Synthetic, or Wood. — Standard, grit-free grade (11, 13).

Super Floss. — A specially fine grade of silica manufactured by Johns-Manville Company (23).

Sylvet Cloth. — A lintless cloth made in England (19).

Tape, Masking.—Standard Grade (11).

Tape, Transparent Cellulose. — Standard grade (18).

Towels, Paper.—Standard grade (4, 5, 10, 13).

Zinc Sulphide (ZnS).—A special grade is made by New Jersey Zinc Company (19).

Soap, Liquid.—Standard commercial green liquid soap, with a $_pH$-value of about 11 (18, 23).

Soap Solution.—Made by adding water to liquid soap (23).

APPENDIX A

FUNCTION OF PRISMS

In a fire control instrument it is frequently desirable to bend the rays of light through an angle in order, for example, to bring the eyepiece into a more convenient position, or to permit the use of the periscopic principle in the design of the instrument. Plane mirrors might be employed for this, but their silvered surfaces are a source of trouble, because their tendency to tarnish causes a loss of light, which grows more serious as the instrument becomes older. For this reason prisms are used instead of mirrors—either for this purpose, or, as in many cases, simply to erect an image which would otherwise appear inverted.

Refraction

While a prism may bend rays by refracting them, as shown in Figure AA, the rays of different colors will be bent or 'dispersed' through different angles, as shown in Figure AB. When the angle through which the rays are bent is very large, the colors are so pronounced that a prism cannot be used. On the other hand, if the angle through which the rays are bent is small, this effect is not pronounced and very often is neglected. The 'correction wedge' in a range finder (Figure 102) is a prism of this sort. If the incident ray is normal, *i.e.*, perpendicular to the first surface, there is no deviation until the second surface is reached.

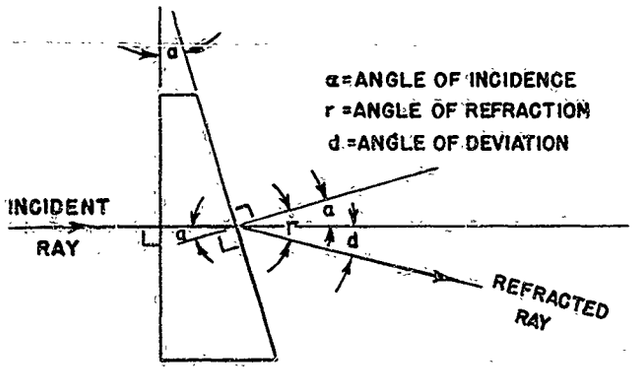

Figure AA.—Refraction by a Prism.

If a is the refracting or physical angle of the prism, the angles of incidence and refraction at the second surface are respectively a and r, where $\sin r = n \sin a$ (see Chapter 2, formula (3)). Since the angles are small, we can can assume that the angles are proportional to the sines and, therefore, $r = na$, and the angle of deviation d is given by the equation:

$$d = r - a = na - a = (n - 1)\, a$$

Because the total angle through which the rays are bent by the correction wedge of a range finder is only a few minutes, the separation of the different colors is slight and it is customary to disregard it in the smaller instruments.

Achromatic Prisms.—An achromatic prism consists of two prism elements cemented together, one of which is made of flint and the other of crown glass. A prism made of flint glass has a larger mean dispersion than one of the same dimensions made of crown glass. In an achromatic prism, the element with the smaller refracting angle is made of flint glass and is turned opposite to the larger prism, which is made of crown glass. The refracting angles are so related that the dispersion of the two elements will offset each other, and although the refracting angles offset each other partially as well, they do not do so entirely and the combined effect gives the doublet the angle of refraction that is desired. In this way the deviated image is almost entirely free from color. In some range finders an achromatic correction wedge is employed instead of the single prism described above.

A prism of small angle, such as that just described, and in which the deviation is primarily the result of refraction, is usually referred to as a 'wedge' because of its shape.

Since a variation of 1 second in the deviation of a wedge produces an error of 0.17 per cent, it is necessary that this deviation be held to a very close tolerance. It should be noted also that the actual deviation produced by a wedge, rather than the angle between the external

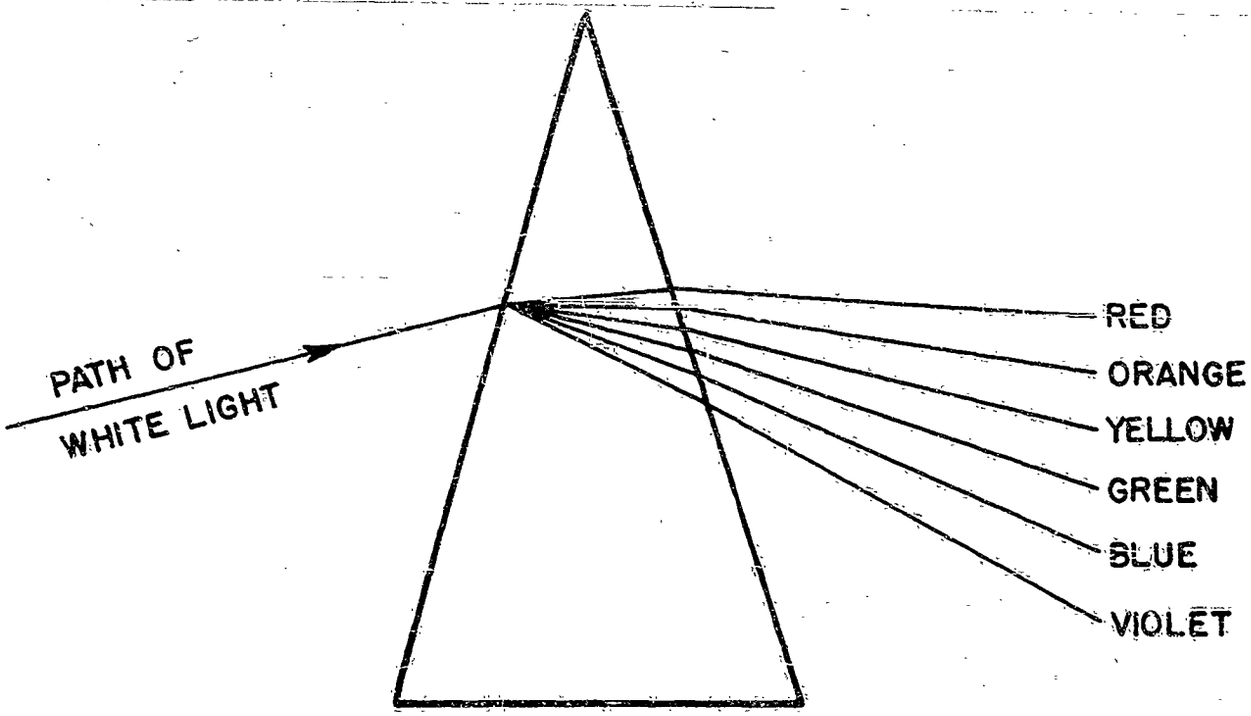

Figure AB.—Dispersion by a Prism.

faces, is the significant value. In addition the surfaces must be regular, of first quality, and depart from planeness by not more than 3 bands, if the definition and general performance is to be satisfactory.

Reflection

When a ray is bent by refraction, even though an achromatic prism is used, it is impossible to obtain complete freedom from color, but when it is bent by reflection, this trouble disappears. Therefore, prisms that are designed to bend the rays by reflection are used in nearly all cases. Such a prism is shown in Figure 107 and is known as a right-angle reflecting prism. It is used when it is desired to bend the rays through an angle of 90°.

Images Formed by Reflecting Prisms. — Some reflecting prisms and prism systems are designed so that the rays passing through them are reflected more than once—in some cases, many times. When rays are reflected they may be considered as forming a bundle of rays which leave the object and, after passing through the prism or prism system, form an image of the object. In this passage, the prism may affect the path of the rays themselves, or it may change the relation of the image to the object, or it may do both.

Character of Image.—When the rays of an object pass through a prism or prism system they form an image which is essentially the same as the object. In the case of a refracting prism, there is a refraction of the rays into the colors of the spectrum and consequently a degree of dispersion, thus introducing both color and a slight blurring into the image, which otherwise, however, is essentially the same as the object. Images formed by a reflecting prism or prism system show no appreciable amount of either refraction or dispersion.

Images formed by a prism or prism system may be either inverted or reverted, as shown in Figure AC, or they may be rotated, deviated, or displaced, or they may have combined characteristics, as indicated in Figure AD.

Path of Rays.—The path of the rays may not be altered by their passage through a prism or prism system, *i.e.*, the path of the rays leaving a prism or prism system may be merely a continuation of their path when entering, *e.g.*, a dove prism, Figure 112. On the other hand,

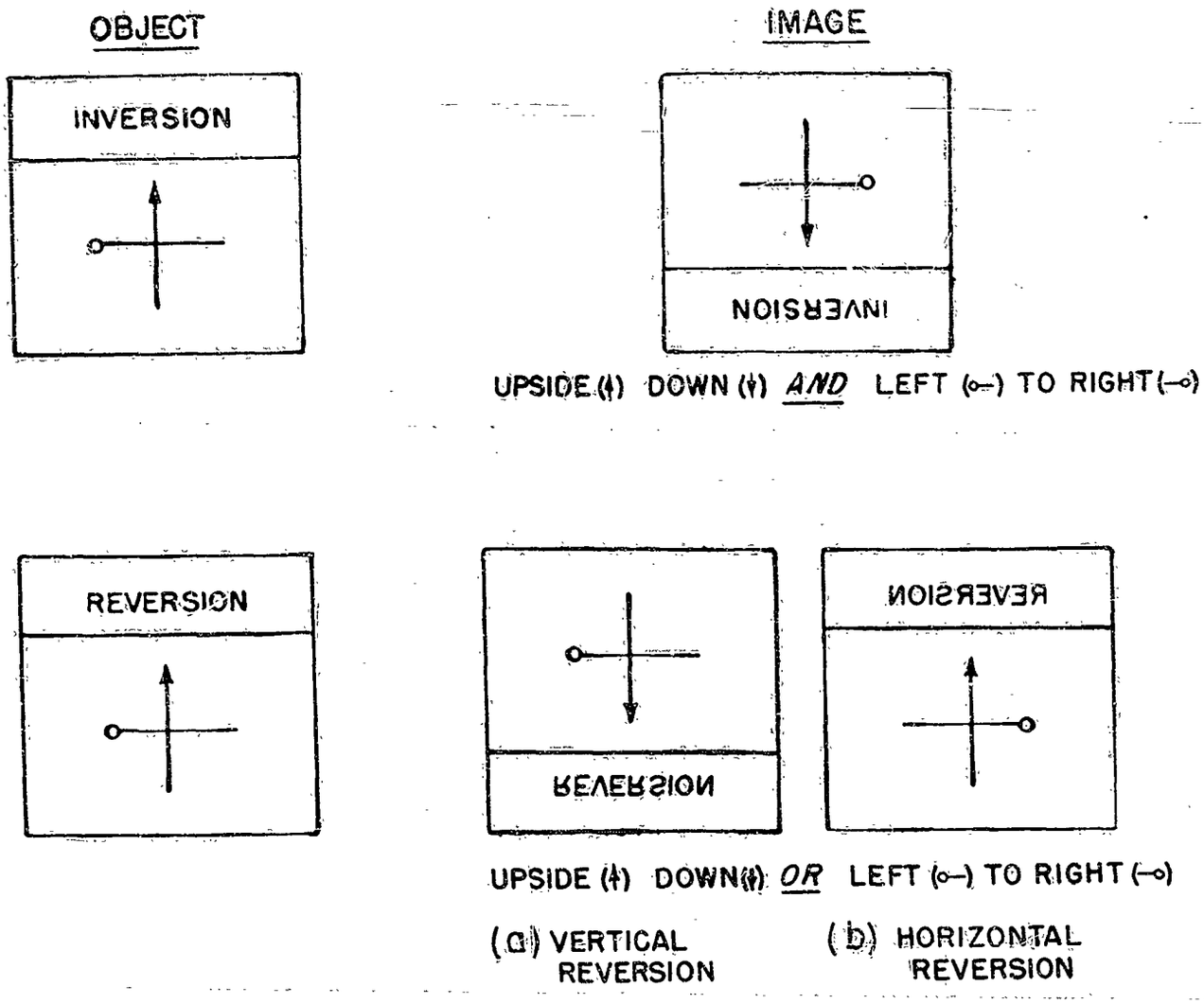

Figure AC.—Appearance of an Image After Inversion or Reversion.

TABLE INDICATING LIGHT PATHS OF COMMON TYPES OF PRISMS AND PRISM SYSTEMS

TYPE	SEE FIGURE NO.	INVERSION OR REVERSION	AMOUNT OF DEVIATION	PARALLEL DISPLACEMENT
REFLECTING PRISMS:				
Porro	103	Neither	180°	No
Porro System	104	Inversion	None	Yes
Abbe	105	Neither (90° Rotation)	90°	No
Porro Abbe System	106	Inversion	None	Yes
Right-angle Reflecting	107	Reversion	90°	No
Amici	108	Inversion	90°	No
Leman (Sprenger)	109	Inversion	None	Yes
Brashear–Hastings (Abbe Roof)	110	Inversion	None	No
Rhomboid (Rhomb)	111	Neither	None	Yes
Dove (Rotating)	112	Reversion	None	No
Penta	113	Neither	90°	No
REFRACTING PRISM:				
Wedge	117	Neither	$(n-1)\ A$*	No

*Where A = physical angle (see formula (12) under "Small Circular Wedge", Chapter 16)

Figure AD.

the path of the exit rays may form an angle with, or deviate from, the path of the entering rays, *i.e.*, the path of the exit rays is not parallel with the path of the entering rays. This deviation may be any angle, but is usually 45, 90, or 180°. Deviation of 180° is a special case in which the path of the exit rays is parallel with that of the path of the entering rays, but, since the direction of movement of the exit rays are opposite to that of the entering rays, it is considered deviation and not displacement (*e.g.*, porro prism, Figure 103). Finally, a prism may displace the path of the entering rays without changing its direction, so that the path of the exit rays is parallel to that of the entering rays, but at some distance from it (*e.g.*, a rhomboid, Figure 111). Figure AC indicates the effect some common types of prisms and prism systems have on incident paths.

APPENDIX B

DERIVATION OF FORMULA FOR LIGHT ABSORPTION

The following is a derivation of the formula used in Chapter 2 to determine the light absorption per centimeter.

Let I_o be the intensity of the incident beam of light. When this beam strikes the surface of the glass, a definite fraction, R, will be reflected while the remaining fraction, $(1-R)$, will be transmitted into the glass. If the light is incident normally on the glass surface, Fresnel's formula for the fraction reflected becomes

$$R = \frac{(n-1)^2}{(n+1)^2}$$

where n is the index of refraction of the glass with respect to air. Calling the intensity of the beam transmitted into the glass I_1, it is seen that

$$I_1 = (1 - R)\ I_o$$

This transmitted beam loses intensity by absorption in the glass at the rate of B per centimeter, where B is a small fraction. Thus, at the end of 1 centimeter of travel through the glass the intensity will drop from I_1 to $I_1\ (1 - B)$. At the end of 2 centimeters travel, the intensity will fall to $[I_1\ (1 - B)]\ (1 - B)$ or $I_1\ (1 - B)^2$. After L centimeters of travel the intensity will become $I_1\ (1 - B)^L$, which, if the glass sample is L centimeters long, will be the intensity at the second surface of the glass. Another loss will occur at this surface due to a second reflection, which will also be in accordance with Fresnel's formula.

The fraction reflected at this second surface will be

$$R' = \frac{(n'-1)^2}{(n'+1)^2}$$

where n' is the index of refraction of air with respect to the glass. Since $n' = \frac{1}{n}$ the formula for R' can be written

$$R' = \frac{\left(\frac{1}{n} - 1\right)^2}{\left(\frac{1}{n} + 1\right)^2} \quad \text{which equals} \quad \frac{(1-n)^2}{(1+n)^2}$$

But since $(1 - n)^2 = (n - 1)^2$

$$R' = R$$

and the intensity of the final emergent beam I_F, will be

$$I_F = I_1\ (1 - B)^L\ (1 - R)$$

but since $I_1 = (1 - R)\ I_o$

$$I_F = I_o\ (1 - R)^2\ (1 - B)^L$$

Substituting the value of R from Fresnel's formula, this becomes

$$I_F = I_o \left[1 - \frac{(n-1)^2}{(n+1)^2}\right]^2 (1 - B)^L$$

and simplifying

$$I_F = I_o \left[\frac{4n}{(n+1)^2}\right]^2 (1 - B)^L$$

Dividing by I_o and multiplying both sides by 100

$$\frac{I_F}{I_o} \times 100 = 100\ (1 - B)^L \left[\frac{4n}{(n+1)^2}\right]^2$$

But $\frac{I_F}{I_o} \times 100$ expresses the final intensity as a percentage of the incident intensity which is the actual reading secured from the photometer. If this quantity is expressed as P and if $100\left[\frac{4n}{(n+1)^2}\right]^2$ which depends solely on the refractive index of the glass and is independent of the reading of the photometer, is expressed by M, the last equation can be written

$$P = M\ (1 - B)^L$$

or

$$(1 - B)^L = \frac{P}{M}$$

which is the form given in Chapter 2, formula (1).

It should be noted that, although this formula allows for losses from absorption in the glass and from reflection at both surfaces, it disregards any other losses, such as those arising from multiple reflections between the two surfaces. These losses are quite small, however, and for nearly all practical purposes, may be neglected.

APPENDIX C

METHOD OF DETERMINING LIQUID MIXTURE RATIOS FOR OBTAINING DESIRED REFRACTIVE INDEXES

The refractive index of a liquid can be made to approximate any value by mixing two liquids in proportions according to the following formula:

$$\frac{Q_2}{Q_1} = \frac{n_2 - n}{n - n_1}$$

where Q_1 = the parts, by volume, of the first liquid,

Q_2 = the parts, by volume, of the second liquid

n = the desired refractive index of the mixture which is equal to that of the glass being tested

n_1 = the refractive index of the first liquid

n_2 = the refractive index of the second liquid

If it is assumed that one part, by volume, of the first liquid is used, this formula can be written in the simpler form:

$$Q_2 = \frac{n_2 - n}{n - n_1}$$

where Q_2 is the number of parts of the second liquid that must be mixed with one part of the first liquid.

As an example, assume that light mineral oil with a refractive index of 1.480 and 'Halowax' oil with a refractive index of 1.634 are available, and that it is desired to make a mixture of these two liquids that will have a refractive index of 1.525. If it is assumed, further, that Halowax oil will be considered as the first liquid, then

$$n = 1.525$$
$$n_1 = 1.480$$
$$n_2 = 1.634$$

Substituting these values in the formula, it will be seen that

$$Q_2 = \frac{1.634 - 1.525}{1.525 - 1.480} = \frac{0.109}{0.045} = 2.42 \text{ parts}$$

of mineral oil.

Hence a mixture of 2.42 parts of mineral oil and 1 part of Halowax oil will have a refractive index of 1.525.

The same result is obtained by using the table given in Figure 206. This table shows the volume ratio for light mineral oil with a refractive index of 1.480, and Halowax oil with a refractive index of 1.634. The ratio will be found where the horizontal line marked 1.52 in the left-hand column intersects the vertical column marked .005.

APPENDIX D

STANDARD TERMINOLOGY FOR BLOCKING FIXTURES

A uniform system of nomenclature for the various fixtures and operations involved in blocking lenses, prisms, and other optical element blanks has been developed and used throughout this manual. It was felt that this was necessary to avoid confusion because of the lack of standardization of terms throughout the industry. This system is illustrated in Figure DA.

As will be noted, this chart is built on the assumption that the operation of locating, plus that of mounting, constitutes the blocking operation. The basic fixtures for blocking various types of optical element blanks are, therefore, shown under two headings 'LOCATING' and 'MOUNTING' either as locating or mounting fixtures. The left-hand column under each of these heads illustrates the fixture that is used for a specific type of operation involving a specific type of optical element blank (or blanks) and surface; the right-hand column shows the fixture with the element blank (or blanks) in place. The three columns under the first head 'CHART OF BLOCKING FIXTURES' show, first, the type of blocking material used, second, the type of optical element blank, and third, either the kind of surface or a more specific designation of the type of element blank which in itself signifies the kind of surface.

In those cases where crossed lines appear in the 'LOCATING' columns, locating operations are not necessary, and consequently no locating fixtures are shown. In these cases, the blocking operation consists only of mounting the optical element blank (or blanks) on the mounting fixture, as indicated at the right in the two columns under 'MOUNTING'.

All words and terms not in parentheses are standardized nomenclature throughout this manual; those in parentheses are colloquial shop terms.

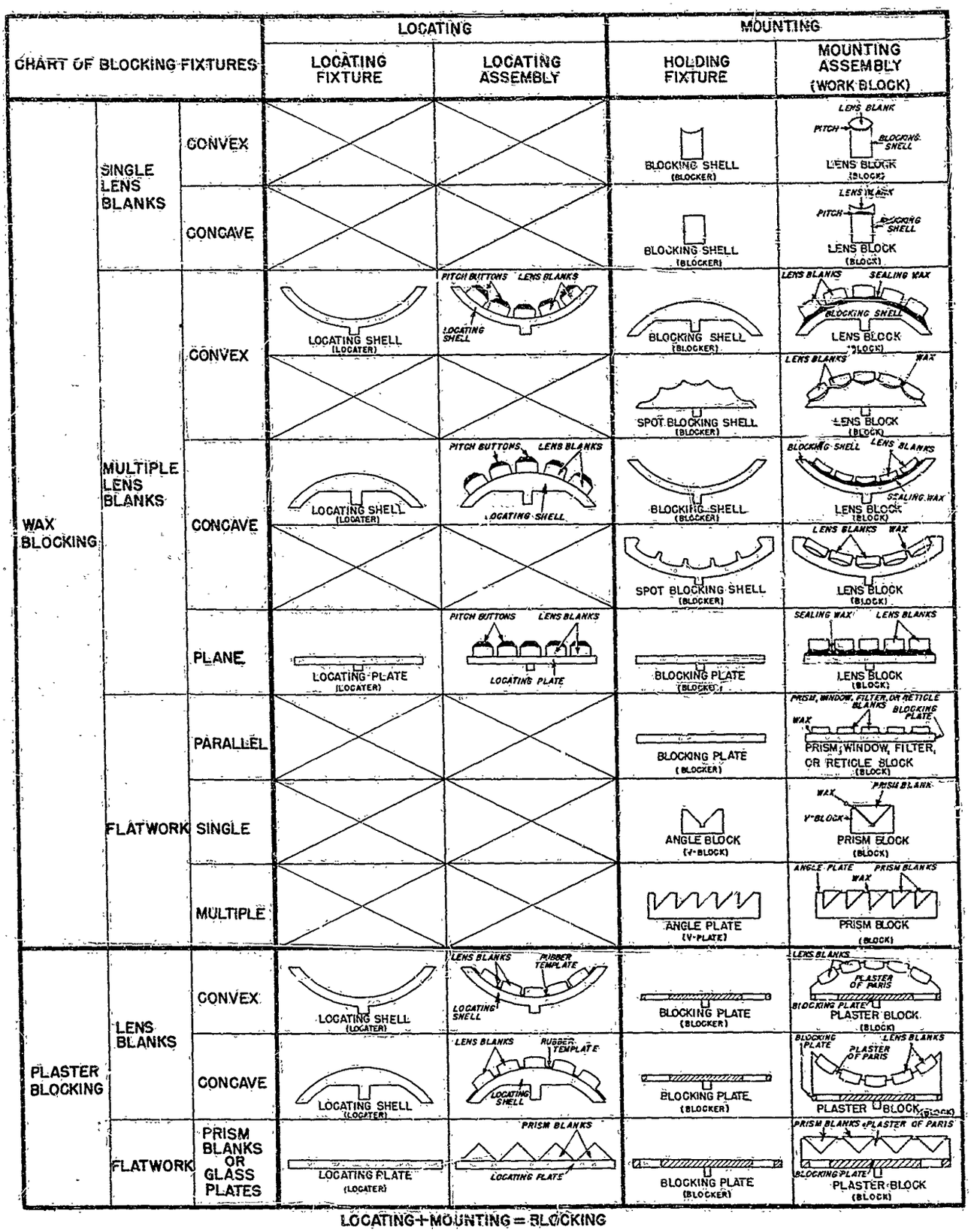
CHART OF BLOCKING FIXTURES
LOCATING
MOUNTING
LOCATING FIXTURE
LOCATING ASSEMBLY
HOLDING FIXTURE
MOUNTING ASSEMBLY (WORK BLOCK)
WAX BLOCKING
SINGLE LENS BLANKS
CONVEX
CONCAVE
MULTIPLE LENS BLANKS
PLANE
FLATWORK
PARALLEL
SINGLE
MULTIPLE
PLASTER BLOCKING
LENS BLANKS
PRISM BLANKS OR GLASS PLATES
LENS BLANK
PITCH
BLOCKING SHELL
LENS BLOCK
(BLOCK)
BLOCKING SHELL
(BLOCKER)
LOCATING SHELL
(LOCATER)
PITCH BUTTONS
LENS BLANKS
LOCATING SHELL
SEALING WAX
SPOT BLOCKING SHELL
WAX
LOCATING PLATE
BLOCKING PLATE
PRISM, WINDOW, FILTER, OR RETICLE BLANKS
PRISM, WINDOW, FILTER, OR RETICLE BLOCK
V-BLOCK
PRISM BLANK
ANGLE BLOCK
(V-BLOCK)
ANGLE PLATE
(V-PLATE)
PRISM BLOCK
RUBBER TEMPLATE
PLASTER OF PARIS
PLASTER BLOCK
LOCATING + MOUNTING = BLOCKING

Figure DA.

BIBLIOGRAPHY

Auerbach, Felix. *Die Physik im Kriege.* Jena: Gustave Fischer, 1917.

Bausch, C. L. "Inspection Methods in Industrial Plants." *Mechanical Engineering* (magazine). July, 1938, pp. 553–556.

Bausch, C. L. "Optics and Defense." (A study of the emergency production of glass and instruments.) *Army Ordnance* (magazine). May–June 1940, pp. 385–388.

Bausch & Lomb. (Brief description of most important military instruments manufactured by Bausch & Lomb.) *Fortune* (magazine). October, 1940, pp. 76–80.

Bell, Louis. *The Telescope.* 1st edition. New York: McGraw–Hill, 1922.

Burmistrov, F. L. "Adsorption Photography." (Concerns production of fine measuring graticules and neutra, photometric filters, and wedges for ultraviolet light.) *Photographic Journal* (magazine). August, 1936, pp. 452–459.

Clay, Reginald S. *Treatise on Practical Light.* London: MacMillan, 1911.

Collins, A. F. *Experimental Optics.* New York: Appleton, 1933.

Conrady, Alexander E. *Applied Optics and Optical Design.* London: Oxford University Press, 1929.

Cook, T. & Sons. *On the Adjustment and Testing of Telescope Objectives.* Great Britain, York: T. Cook & Sons, 1921.

Czapski, Siegfried. *Grundzuge der Theorie der Optischen Instrumente.* Leipzig: J.A. Barth, 1904.

Dauber, Joseph. "Shop Measurements with Light Waves." *Modern Machine Shop* (magazine). September, 1943, pp. 118–130; and October, 1943, pp. 174–198.

Deve, Col. Charles. *Optical Workshop Principles.* Translated by T. L. Tippell from "Le Travail des Verres d'Optique de Precision." London: Adam Hilger, 1943.

Drude, Paul. *Theory of Optics.* New York: Longmans, 1907.

Edser, Edwin. *Light for Students.* London: MacMillan and Co., Ltd., 1931.

Eisenhart, M. Herbert and Melson, E. W. "Development and Manufacture of Optical Glass in America." *Scientific Monthly* (magazine). April, 1940, pp. 323–334.

Ewald, Dr. Waldemar. *Die Optische Werkstatt.* Berlin: Verlag von Gebrüder Borntraeger, 1930.

"Fine Annealing of Optical Glass." *Journal of Franklin Institute* (magazine). November, 1927, pp. 667–668.

Finn, A. N. "Optical Glass at the U.S. National Bureau of Standards." Journal of the *Optical Society of America* (magazine). January, 1938, pp. 13–17.

Finn, A. N. "Optical Glass at the U.S. National Bureau of Standards." *Glass Industry* (magazine). November 1937, pp. 368–369.

"Fluorine Film on Optical Glass." *Science* (magazine). supplement 14. January 6, 1939.

Frank, N. H. *Introduction to Electricity and Optics.* New York: McGraw–Hill, 1940.

Gardner, I. C. "An Attachment for Turning Approximately Spherical Surfaces of Small Curvature on a Lathe." U.S. National Bureau of Standards. *Research Paper No. 467.* August, 1932.

Gardner, I. C. "Application of the Algebraic Aberration Equations to Optical Design." U.S. National Bureau of Standards. *Scientific Paper No. 550.* October 9, 1926.

Gardner, I. C. and Case, F. A. "Precision Camera for Testing Lenses." (Apparatus particularly adapted to testing airplane camera lenses.) U.S. National Bureau of Standards. *Journal of Research.* April, 1937, pp. 449–460.

Gleichen, Alexander. *Theory of Modern Optical Instruments*. Great Britain: His Majesty's Stationery Office, 1921.

Glossary of Technical Terms for Instrument Repair. Ordnance Replacement Training Center: Instrument Repair Section.

Guilford, Robert S. "The Manufacture of Photographic Lenses." *Glass Industry* (magazine). volume 12. February, 1931, pp. 23-27.

Hansen, G. "Photographic Resolving Power in the Construction of Optical Instruments." *Photographische Industrie* (magazine). volume 36. Berlin, 1938, pp. 692–694, 716–718.

Hardy, Arthur C. and Perrin, Fred H. *The Principles of Optics*. (International Series in Physics.) 1st edition. New York: McGraw-Hill, 1932.

Harting, Dr. H. of Jena. *Theory of the Double Cemented Telescope Objective*. Translated from "Z. für Instrum[illegible]nkunde." December, 1898.

Heath, R. S. *A Treatise on Geometrical Optics*. Cambridge: University Press, 1895.

Hovestadt, Heinrich. *Jena Glass and Its Scientific and Industrial Applications*. New York: MacMillan, 1902.

Hunter, J. C. "A Mechanism for Graduating Dials of Optical Instruments." *American Machinist* (magazine). December 16, 1920, pp. 1139–1140.

Hunter, J. C. "Small Machines for Building Optical Instruments." *American Machinist* (magazine). December 2, 1920, pp. 1045–1047.

Ingalls, Albert G., editor *Amateur Telescope Making*. (Reprinted from articles in Scientific American.) 4th edition. New York: Munn, 1939.

Jacobs, Donald. *Fundamentals of Optical Engineering*. New York: McGraw-Hill, 1943.

Jenkins, F. A. and White, H. E. *Fundamentals of Physical Optics*. New York: McGraw-Hill, 1937.

Johnson, B. K. *Practical Optics for the Laboratory and Work Shop*. London: Benn Bros., 1922.

Johnson, R. L. "Elementary Principles of Optics." parts I to VII. *Ordnance Sergeant* (magazine). January–July, 1941.

Knapp, Dr. Oscar. "Optical Glasses." (Composition of glass.) *Glass Industry* (magazine). December, 1938, pp. 465–468.

König, Albert. *Die Fernrohre und Entfernungsmesser*. Berlin: Julius Springer, 1923.

Lehmberg, W. H. "Standards Control Quality in Optical Manufacture." (American Optical Company Procedure.) *Industrial Standardization* (magazine). October, 1940, pp. 249–251.

Macconochie, A. F. "Manufacture of Optical Parts for Rangefinders and Fire-Control Instruments." *Steel* (magazine). September 22, 1941, pp. 52–55.

Mann, Charles Riborg. *Manual of Advanced Optics*. Chicago: Scott, Foresman, 1902.

Martin, L. C. *An Introduction to Applied Optics*. volume II. (Theory and construction of instruments.) London: Pitman, 1932.

Martin, L. C. *Optical Measuring Instruments, Their Construction, Theory, and Use*. London: Blackie & Son, Ltd., 1924.

Michelson, A. A. *"Optical Conditions Accompanying Striae Which Appear as Imperfections in Optical Glass."* U.S. National Bureau of Standards. *Scientific Paper No. 333*. March 20, 1919.

Michie, Peter Smith. *Elements of Wave Motion Relating to Sound and Light*. New York: Van Nostrand, 1886.

Minor, R. S. and White, H. E. *Laboratory Exercises in Physical Optics*. University of California: Berkeley, California. Copyrighted by R. S. Minor, 1933.

Minor, R. S. and White, H. E. *Laboratory Exercises in Geometrical Optics*. University of California: Berkeley, California. Copyrighted by R. S. Minor, 1941.

Monk, George Spencer. *Light; Principles and Experiments*. New York: McGraw-Hill, 1937.

Morey, G. W. *Properties of Glass*. New York: Reinhold, 1938.

Muller, R. H. "American Apparatus, Instruments, and Instrumentation." (Optical instruments, microscope, photometer, reflectometer.) *Industrial and Engineering Chemistry* (magazine). analytical edition. October 15, 1940, pp. 591–602.

Nutting, P. G. *Outlines of Applied Optics*. Philadelphia: Blakiston, 1912.

"Notes on Japanese Glass Activities." (Optical glass for microscopes, telescopes, and cameras.) *Glass Industry* (magazine). July, 1937, pp. 243–244.

"Rejects in Optical Shop Reduced by Air Conditioning." (Frankford Arsenal.) *Heating and Ventilating* (magazine). October, 1939, pp. 33–34.

Optics and Service Instruments. Reprinted by permission of the Controller of His Brittanic Majesty's Stationary Office. Brooklyn, New York: Chemical Publishing Company, 1941.

Orford, Henry. *Lens Work for Amateurs*. 5th edition. London: Pitman, 1931.

Rayton, W. "Optical Glass Requirements of the Optical Industry." *Journal of the Optical Society of America* (magazine). January, 1938, pp. 8–12.

Rayton, W. "Status of Lens Making in America." *Journal Society Motion Picture Engineers* (magazine). volume 33. October, 1939, pp. 426–433.

Robertson, J. K. *Introduction to Physical Optics*. New York: Van Nostrand, 1941.

Saegmuller, George N. *Description of Zeiss Works*, Jena: April 21, 1914.

Scott, Murray R. "Making of Optical Glass." *Glass Industry* (magazine). December, 1936, pp. 420–422.

Skinner, C. A. "Making a Standard of Planeness." (Description of grinding and polishing quartz surfaces optically flat, and final testing of these surfaces.) *General Electric Review* (magazine). volume 29. August, 1926, p. 528.

Smith, T. "Optical Instruments of Symmetrical Construction." *Proceedings of the Physical Society*. volume 52, March 1, 1940, pp. 266–268.

Smith, T. T., Bennett, A. H., and Merritt, G. E. "Characteristics of Striae in Optical Glass." U.S. National Bureau of Standards. *Scientific Paper No. 373*. May 3, 1920.

Southall, James Powell Cooke. *Mirrors, Prisms, and Lenses; A Textbook of Geometrical Optics*. 3rd edition. New York: Macmillan, 1933.

Steinheil, Hugo Adolph. *Applied Optics*. (The computation of optical systems, a translation of the "Handbuch der Angewandten Optik.") London: Blackie & Son, Ltd., 1918–1919.

Strong, John W. *Procedures in Experimental Physics*. New York: Prentice-Hall, 1938.

Taylor, E. W. "The manufacture of Large Astronomical Object Glasses." (The process of grinding, polishing, and testing an objective.) *Proceedings of the Optical Convention*. part II, 1926, p. 604.

Taylor, H. Dennis. *System of Applied Optics*. London: MacMillan, 1906.

Taylor, Lloyd William. *College Manual of Optics*. New York: Ginn, 1924.

Tilton, L. W. "Cause and Removal of Certain Heterogeneities in Glass." U. S. National Bureau of Standards. *Scientific Paper No. 572* October, 1927.

Tilton, Leroy W. T. "Standard Conditions for Precise Prism Refractometry." U. S. National Bureau of Standards. *Research Paper No. 776*. April, 1935.

U. S. Ordnance Department. *Elementary Optics and Applications to Fire Control Instruments*. Document No. 1065. Revised edition. Washington: Government Printing Office, 1924.

U. S. Ordnance Department. *The Manufacture of Optical Glass and of Optical Systems*. Document No. 2037. Washington: Government Printing Office, 1921.

U. S. Ordnance Department. *Designing of Optical Systems for Telescopes.* By O. K. Kaspereit. Chief of Ordnance, February, 1933, Technical Notes No. 14.

U. S. Ordnance School. *Elementary Optics.* 2nd edition. Aberdeen Proving Ground, Aberdeen, Maryland. December, 1942.

U. S. War Department Technical Manual TM 9–1501 (restricted). *Operation and Maintenance of Optical Coating Equipment.* Washington 25, D.C., March 12, 1945.

Valasek, Joseph. *Elements of Optics.* New York: McGraw–Hill, 1932.

Von Rohr, M. *Die Bilderzeugung in Optischen Instrumenten.* Berlin: Springer 1904.

Wadleigh, W. H. "Viscosity of Optical Glass." U. S. National Bureau of Standards. *Research Paper No. 577.* July, 1933.

Wagner, A. F. *Experimental Optics.* (Testing of telescopic instruments.) New York: Wiley, 1929.

Washer, F. E. "Resolving Power and Distortion of Typical Airplane-Camera Lenses." U. S. National Bureau of Standards. *Research Paper No. 1216.* June, 1939, pp. 729–746.

Whitlock, C. H. "Molding Lenses." (Use of plastics in making spectacles, masks, or protective lenses.) *Modern Plastics* (magazine) December, 1940, pp. 36–37, 86, 88, 90.

Winters, S. R. "New Method of Fusing Glass." *Scientific American* (magazine). August, 1922, p. 105.

Wood, Robert W. *Physical Optics.* 3rd edition. New York: MacMillan, 1934.

Wrighton, W. J. and Jarrett, W. C. "Induction Melting and Soldering in Optical Industry." *Metals and Alloys* (magazine. June, 1940, pp. 185–188.

ARMY-RARITAN ARSENAL(RAPD),METUCHEN,NJ-51-1198

Reproduced by

DOCUMENT SERVICE CENTER

ARMED SERVICES TECHNICAL INFORMATION AGENCY

U. B. BUILDING, DAYTON, 2, OHIO

REEL-C 6713

A.T.I. 170108

"NOTICE: When Government or other drawings, specifications or other data are used for any purpose other than in connection with a definitely related Government procurement operation, the U.S. Government thereby incurs no responsibility, nor any obligation whatsoever; and the fact that the Government may have formulated, furnished, or in any way supplied the said drawings, specifications or other data is not to be regarded by implication or otherwise as in any manner licensing the holder or any other person or corporation, or conveying any rights or permission to manufacture, use or sell any patented invention that may in any way be related thereto."

UNCLASSIFIED

AD-A800 011

(Unannounced Document) UNCLASSIFIED 029950 P 19/5

ATI 170 108 * (Copies obtainable from ASTIA-DSC)

Anderson, Nichols, Associates, Boston, Mass.

Optical Elements for Fire Control Instruments - Description of Manufacture - and Appendixes A thru D

April'51 497pp. photos, tables, diagrs, graph, drwgs

PB 157062

USA Contr. No. W-36-038-ord-3476

Instruments, Fire control
Instruments, Optical

Ordnance and Armament (22)
Fire Control (4)

UNCLASSIFIED

* Fire Control Systems
Optical Instruments

NTIS, auth: PB 157062 (per catalog card, 3 MARCH 71)

ATI- 170 108

Anderson, Nichols, Associates, Boston, Mass.
OPTICAL ELEMENTS FOR FIRE CONTROL INSTRUMENTS - DESCRIPTION OF MANUFACTURE - AND APPENDIXES A THRU D. April '51, 497 pp, incl. photos, tables, diagrs, graph, drwgs.

UNCLASSIFIED

(Not abstracted)

1. Instruments, Fire control
2. Instruments, Optical

I. USA Contr. No. W-36-038-ORD-3476

DIVISION: Ordnance and Armament (22)
SECTION: Fire Control (4)
DISTRIBUTION: Copies obtainable from ASTIA-DSC.

When this card has served its purpose, it may be destroyed in accordance with AFR 205-1, Army Reg. 380-5 or OPNAV Inst. 551-1.

ARMED SERVICES TECHNICAL INFORMATION AGENCY
DOCUMENT SERVICE CENTER