MEDUSA FOR ELVIRA SATELLITE

Dr. J.D. Winningham
Southwest Research Institute
P.O. Drawer 28510
6220 Culebra Road
San Antonio, TX 78228-0510
phone: (210) 522-3075, fax: (210) 647-4325, e-mail: david@dews1.space.swri.edu
Award #: N00014-96-1-0613/P00001

LONG -TERM GOAL

The long term goal of this grant is to develop a low mass, power, and volume electron and ion electrostatic analyzer for measuring plasmas from a few eV to 10s of KeV energies. A parallel goal is to develop techniques that also lower the overall cost of building flight qualified units. The ultimate science long-term goal supported by this technology is the multipoint (in space-time) measurement capability of low earth plasmas for input to space weather modeling.

SCIENTIFIC OBJECTIVES

Currently, heavy interest is being placed on nowcasting and forecasting of space weather. Auroral plasma energy deposition, along with Joule dissipation, represents the majority of external, non solar photonic energy input into the earths ionosphere, thermosphere, and mesosphere. As such it is absolutely essential to have an accurate, global, space/time resolved determination of this energy source. To date this has not occurred with sufficient accuracy to be effectively used in now- and -fore-casting of spaceweather and its consequences. The chief reason is the high cost of instruments and missions which make it prohibitive to provide a dense enough observations matrix. A new approach is detailed in the next section to allow achievement of these space weather science goals.

APPROACH

In order to measure electrons and ions from eVs to 10s of KeV energies one has to use at least 2 analyzers if not more, to get a complete phase space measurement. We have developed a combined electron and ion tophat analyzer (see Figure 1) that not only decreases the number but eases mounting and FOV problems, plus significantly lowers the mass and volume. This system is refered to as the Miniaturized Electrostatic Dual-tophat Spherical Analyzer (MEDUSA). Both tophat analyzers share a common collimation system and mirror image tophat (see Figure 2). We designed the tophats to have the smallest possible radii consistent with the desired sensitivity. This helps to reduce volume and mass plus it allows us to use off-the-shelf Micro Channel Plates (MCPs) which lowers the cost.

Report Documentation Page

Form Approved
OMB No. 0704-0188

Public reporting burden for the collection of information is estimated to average 1 hour per response, including the time for reviewing instructions, searching existing data sources, gathering and maintaining the data needed, and completing and reviewing the collection of information. Send comments regarding this burden estimate or any other aspect of this collection of information, including suggestions for reducing this burden, to Washington Headquarters Services, Directorate for Information Operations and Reports, 1215 Jefferson Davis Highway, Suite 1204, Arlington VA 22202-4302. Respondents should be aware that notwithstanding any other provision of law, no person shall be subject to a penalty for failing to comply with a collection of information if it does not display a currently valid OMB control number.

1. REPORT DATE **30 SEP 1997**	2. REPORT TYPE	3. DATES COVERED **00-00-1997 to 00-00-1997**
4. TITLE AND SUBTITLE **Medusa for Elvira Satellite**		5a. CONTRACT NUMBER
		5b. GRANT NUMBER
		5c. PROGRAM ELEMENT NUMBER
6. AUTHOR(S)		5d. PROJECT NUMBER
		5e. TASK NUMBER
		5f. WORK UNIT NUMBER
7. PERFORMING ORGANIZATION NAME(S) AND ADDRESS(ES) **Southwest Research Institute,6220 Culebra Road,San Antonio,TX,78228-0510**		8. PERFORMING ORGANIZATION REPORT NUMBER
9. SPONSORING/MONITORING AGENCY NAME(S) AND ADDRESS(ES)		10. SPONSOR/MONITOR'S ACRONYM(S)
		11. SPONSOR/MONITOR'S REPORT NUMBER(S)
12. DISTRIBUTION/AVAILABILITY STATEMENT **Approved for public release; distribution unlimited**		
13. SUPPLEMENTARY NOTES		
14. ABSTRACT		
15. SUBJECT TERMS		

16. SECURITY CLASSIFICATION OF:			17. LIMITATION OF ABSTRACT	18. NUMBER OF PAGES	19a. NAME OF RESPONSIBLE PERSON
a. REPORT **unclassified**	b. ABSTRACT **unclassified**	c. THIS PAGE **unclassified**	**Same as Report (SAR)**	**5**	

Standard Form 298 (Rev. 8-98)
Prescribed by ANSI Std Z39-18

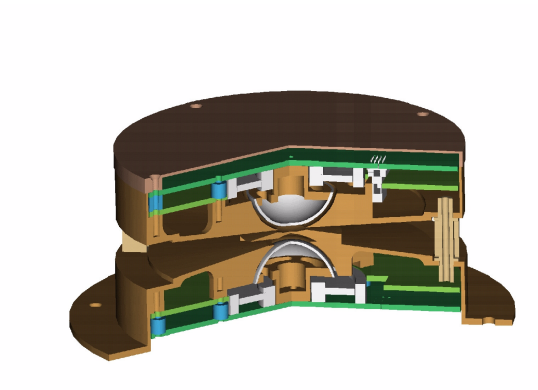

Figure 1. Tophat Analyzer

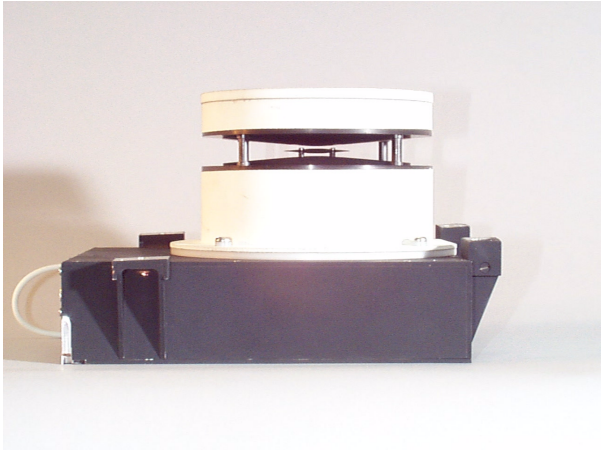

Figure 2. MEDUSA

In order to further reduce complexity and mass, the mounting support for the inner plate is part of a single board (Figure 3) which contains the MCP, amplifiers and associated resistance, capacitors, etc. The ion and electron sides each have 16 discrete anodes. A novel, charge sensitive, commercial multi-amplifier is employed. Each part has 8 amps thus requiring only 2 parts per side. The parts are ~$30 which represents a 100x decrease in cost compared to past implementation. In addition, the reduction in parts count greatly simplifies board layout. The MCP high voltage bias and deflection supply is contained on a single board (per side) (See Figure 4), thus only 2 boards are required to implement the analyzer section.

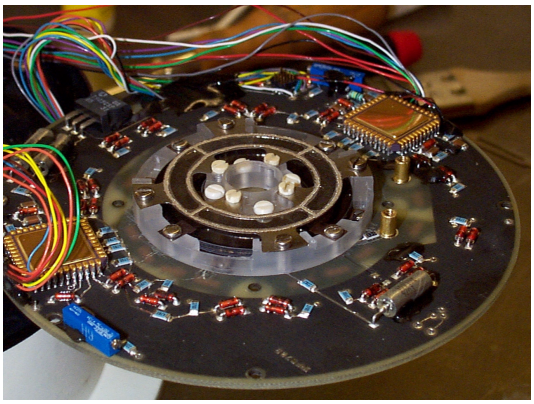

Figure 3. Single Board

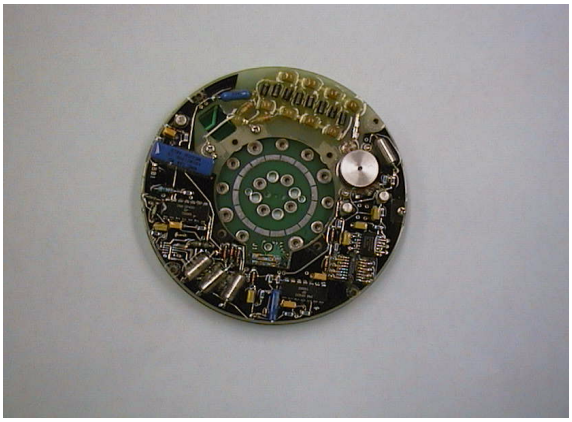

Figure 4. Single Board per Side

The digital electronics are contained in a small rectangular box (see Figure 5 and Figure 6). The analyzer mates through micro-miniature connectors to the electronics box. The complete system has a mass of only 1.7kg and uses a little less than 3 watts.

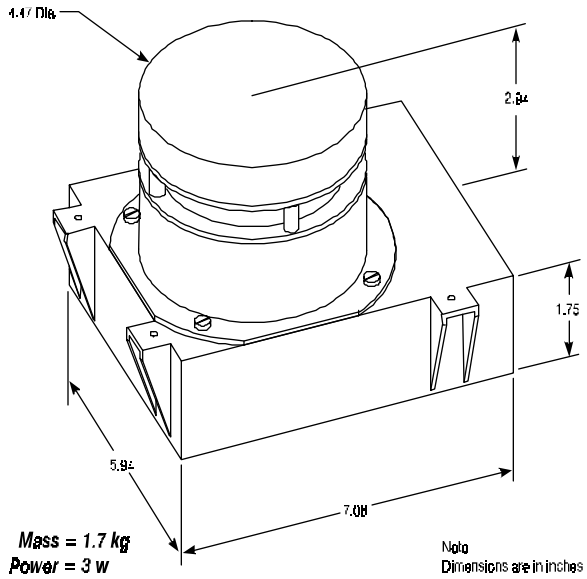

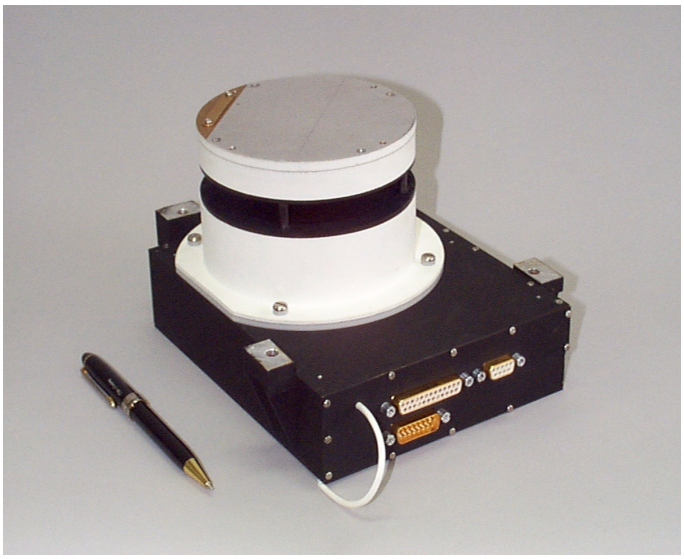

Figure 5. Digital Electronic Box Figure 6. Digital Electronic Box

This system will be flown on the Swedish ASTRID-2 microsatellite (~35 kg and the size of a view-graph machine) in January 1998, thus completing the validation of our low cost, low mass, low cost plasma analyzer system. This paves the way for the next step in its use on a 5 kg nano satellite named MUNIN.

WORK COMPLETED

We will briefly review the last year's progress here. Last years effort included:

1. Support the ESA (electrostatic analyzer) integration with the electronics unit;
2. Support the complete assembly bench checkout;
3. Support the thermal vaccum environment testing;
4. Support the instrument science calibration;
5. Support spacecraft integration;
6. Support launch if it occurs within the grant period;
7. Generate software to place the data in Instrument Data File Set format;
8. Aid Sweden in setting up a near real-time data production system; and
9. Begin data analysis if launch occurs in the grant period.

Each item will be discussed relative to the numbers above:

1. The engineering ESA was successfully mated with the Swedish engineering model electronics. Several wiring errors were found and corrected. The complete engineering unit was mated with the ASTRID-2 engineering model spacecraft successfully;
2. The bench checkout occurred prior to the engineering spacecraft test and all went well;
3. Thermal testing revealed problems in the Swedish thermal models. Changes were made to the engineering model and the instrument then met the desired temperatures with the expected operating range;
4. We have requested a no-cost-time extension for the present years funds. This is due to the slip in the ASTRID 2 launch date. The instrument science calibration has thus been slipped. It will occur in late September / early October in Sweden. We have performed liveness, noise and cross-talk checks in the meantime in the U.S. Several problems were found but all have been solved. All sections perform well with low noise and no discernable interanode crosstalk;
5. We have supported the engineering spacecraft integration successfully. The flight model integration is slipped and will occur in October;
6. As mentioned the launch has slipped to January, 1998. This is due to the Russian prime payload slipping;
7. We have delayed the software work due to launch slippage and thus lack of some needed input. These have now been cleared and we have started on this task for both MEDUSA and PIA (the UV limbscanner) which shares our DPU. Data from the flight spacecraft integration and test, and & science calibrations will form the validation data suite (the chief missing information to date);
8. Again the real-time system work has not begun for ASTRID. However, it has for another project at SwRI. Much of this work will be directly usable for ASTRID. This effort will restart in late October. Most of the structures needed can be cloned and modified from other projects and no impact is foreseen due to the delay. The goal is still to have the data available via the WWW within hours, if not minutes of receipt; and
9. Launch will not occur within the extended time period of year 2, thus no data analysis. These funds have been reprogrammed to start the refurbishment of the ASTRID-2 MEDUSA engineering unit for the Swedish MUNIN nanosatellite. Next year funds will cover the analysis of ASTRID data.

RESULTS

The MEDUSA instrument is yet to fly so the results are of an engineering nature. The main result is the successful development of a miniaturized, low cost dual-species electrostatic analyzer for auroral plasma measurements. We have developed techniques which will allow us to mass manufacture such systems at a fraction of the typical cost of big NASA style missions. The emphasis has been on quality without unnecessary and unproductive red tape activities. This opens up the possibility for “fleets of measurement platforms” when joined with other related work in nano and microsatellite spacecraft.

Next year we will have launched and be producing scientific data in near-realtime on the web for general usage.

IMPACT/APPLICATION

This instrument technology has now been incorporated into the next generation of ultra-small (5 kg, shoebox size) nanosatellite missions. A new nonsat mission called MUNIN will be launched in May 1999. This represents the advent of "bouy style", throw it overboard measurement platforms. It's cost point will allow a dense web of space/time measurements to be made as part of data input into space weather now and forecasting models.

TRANSITIONS

The initial MEDUSA will be flown next January on the ASTRID-2 microsatellite. We are now transitioning work to the MUNIN nanosatellite to be launched in May 1999. Negotiations are in progress for a free piggyback ride by NASA for a nanosatellite (HUGIN) also in May, 1999. If successful this launch will carry either MUNIN and HUGIN as a dual satellite into the same orbit for small scale space time measurements or only HUGIN with MUNIN on a Russian launch. This latter scenario will give two different sun synchronous orbits in different local time sectors. It represents the transition to multipoint measurements.

RELATED PROJECTS

As mentioned earlier we are already starting one (maybe two) nanosat projects to use this MEDUSA technology. Plans are in progress to seek launch and funding sources for large numbers of nanosatellites and lesser microsatellites.

WEB ADDRESS

http://munin.irf.se

http://www.ssc.se/ssd/msat/astrid2.html

http://mars.irf.se/Astrid-2/

http://sapin.irfu.se/IRF-U/sat/astrid2/

www.irf.se/~jonas/a2/