Optimization of Treatment To Conserve Water At The US Naval Academy

Ramesh Mehta - NAVFAC
Dave Hiltebrand – AH ENV

5/6/2009

Report Documentation Page

Form Approved
OMB No. 0704-0188

Public reporting burden for the collection of information is estimated to average 1 hour per response, including the time for reviewing instructions, searching existing data sources, gathering and maintaining the data needed, and completing and reviewing the collection of information. Send comments regarding this burden estimate or any other aspect of this collection of information, including suggestions for reducing this burden, to Washington Headquarters Services, Directorate for Information Operations and Reports, 1215 Jefferson Davis Highway, Suite 1204, Arlington VA 22202-4302. Respondents should be aware that notwithstanding any other provision of law, no person shall be subject to a penalty for failing to comply with a collection of information if it does not display a currently valid OMB control number.

1. REPORT DATE **06 MAY 2009**	2. REPORT TYPE	3. DATES COVERED **00-00-2009 to 00-00-2009**
4. TITLE AND SUBTITLE **Optimization of Treatment to Conserve Water at the US Naval Academy**		5a. CONTRACT NUMBER
		5b. GRANT NUMBER
		5c. PROGRAM ELEMENT NUMBER
6. AUTHOR(S)		5d. PROJECT NUMBER
		5e. TASK NUMBER
		5f. WORK UNIT NUMBER
7. PERFORMING ORGANIZATION NAME(S) AND ADDRESS(ES) **Naval Facilities Engineering Command,Engineering Service Center,1100 23rd Ave,Port Hueneme,CA,93043**		8. PERFORMING ORGANIZATION REPORT NUMBER
9. SPONSORING/MONITORING AGENCY NAME(S) AND ADDRESS(ES)		10. SPONSOR/MONITOR'S ACRONYM(S)
		11. SPONSOR/MONITOR'S REPORT NUMBER(S)
12. DISTRIBUTION/AVAILABILITY STATEMENT **Approved for public release; distribution unlimited**		
13. SUPPLEMENTARY NOTES **Presented at the NDIA Environment, Energy Security & Sustainability (E2S2) Symposium & Exhibition held 4-7 May 2009 in Denver, CO.**		
14. ABSTRACT		
15. SUBJECT TERMS		

16. SECURITY CLASSIFICATION OF:			17. LIMITATION OF ABSTRACT	18. NUMBER OF PAGES	19a. NAME OF RESPONSIBLE PERSON
a. REPORT **unclassified**	b. ABSTRACT **unclassified**	c. THIS PAGE **unclassified**	**Same as Report (SAR)**	**20**	

Standard Form 298 (Rev. 8-98)
Prescribed by ANSI Std Z39-18

NAVFAC
Naval Facilities Engineering Command

US Naval Academy:

- Established 1845
- 1,160 Acres
- 3.46 MGD Iron Removal WTP:
  - Constructed 1971
  - Modifications in 1998 & 2004

NAVFAC
Naval Facilities Engineering Command

Source Water:

- 3 wells
- 600’ to 700” Deep
- Upper Patapsco Aquifer
- 1200 – 1300 gpm capacity
- 20 mg/L Iron

Naval Facilities Engineering Command

Objectives:

- Reduce volume of sludge being generated
- Reduce amount of backwash water being discharged
- ID alternative sludge disposal methods

NAVFAC
Naval Facilities Engineering Command

Approach:

- Review existing design & operating information
- ID where water is being lost & quantity
- Evaluate processes
- ID alternatives to reduce volume of waste & costs

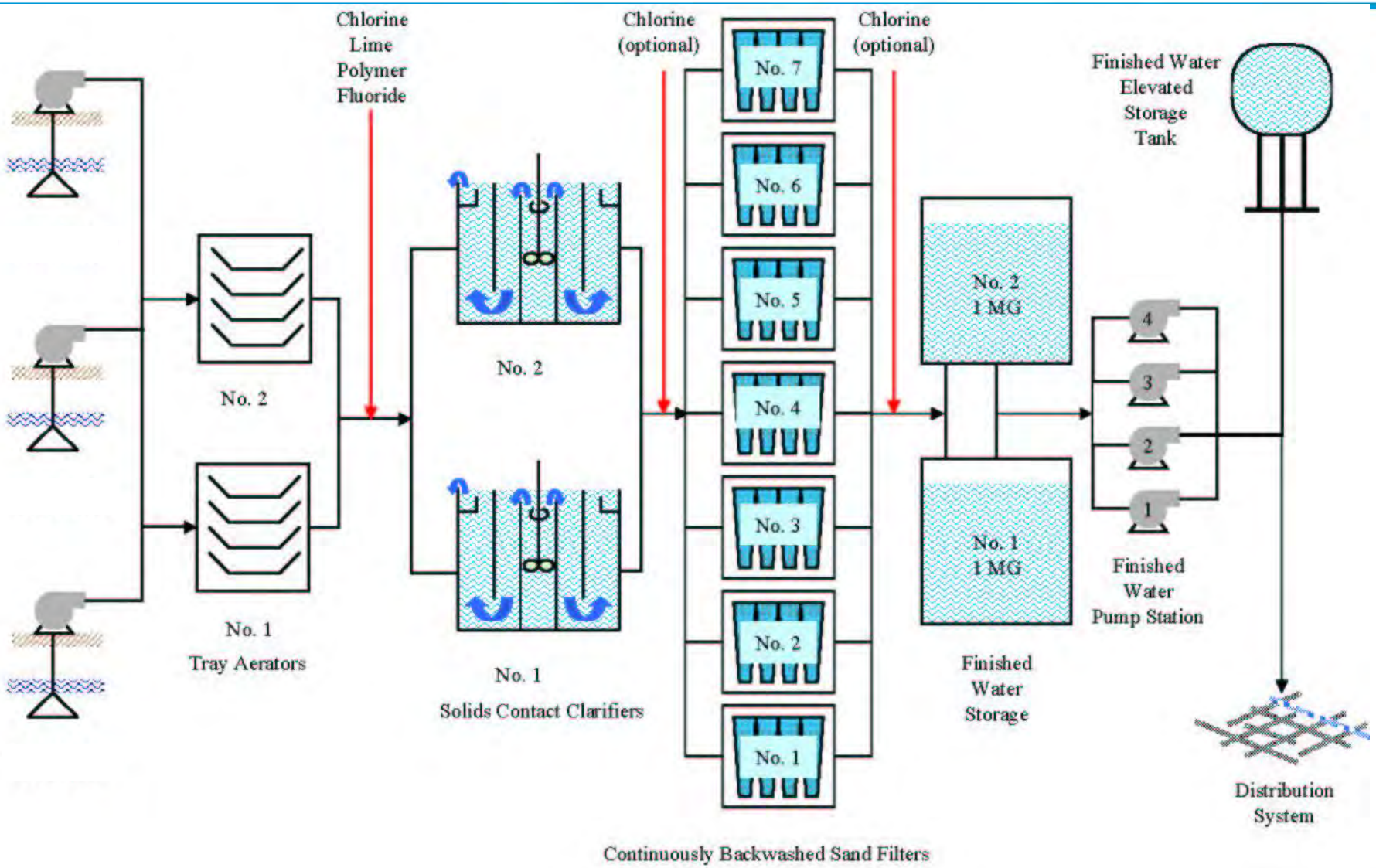
Chlorine
Lime
Polymer
Fluoride
Chlorine
(optional)
Chlorine
(optional)
Finished Water
Elevated
Storage
Tank
No. 7
No. 6
No. 5
No. 4
No. 3
No. 2
No. 1
No. 2
No. 1
Tray Aerators
No. 2
No. 1
Solids Contact Clarifiers
No. 2
1 MG
No. 1
1 MG
Finished
Water
Storage
4
3
2
1
Finished
Water
Pump Station
Distribution
System
Continuously Backwashed Sand Filters

NAVFAC
Naval Facilities Engineering Command

WTP Operations:

- Manned 24/7 but operated 14 hrs/day
- 1.8 MGD average production
- 50,000 g/hr blow-down from clarifiers:
  - Frequency = 1/day to 1 every 4 days
- 13,000 g/hr filter backwash water being generated
- Total filter backwash = 160,000 gal/day (14 hrs ops)

Upflow Solids-Contact Clarifier (2)

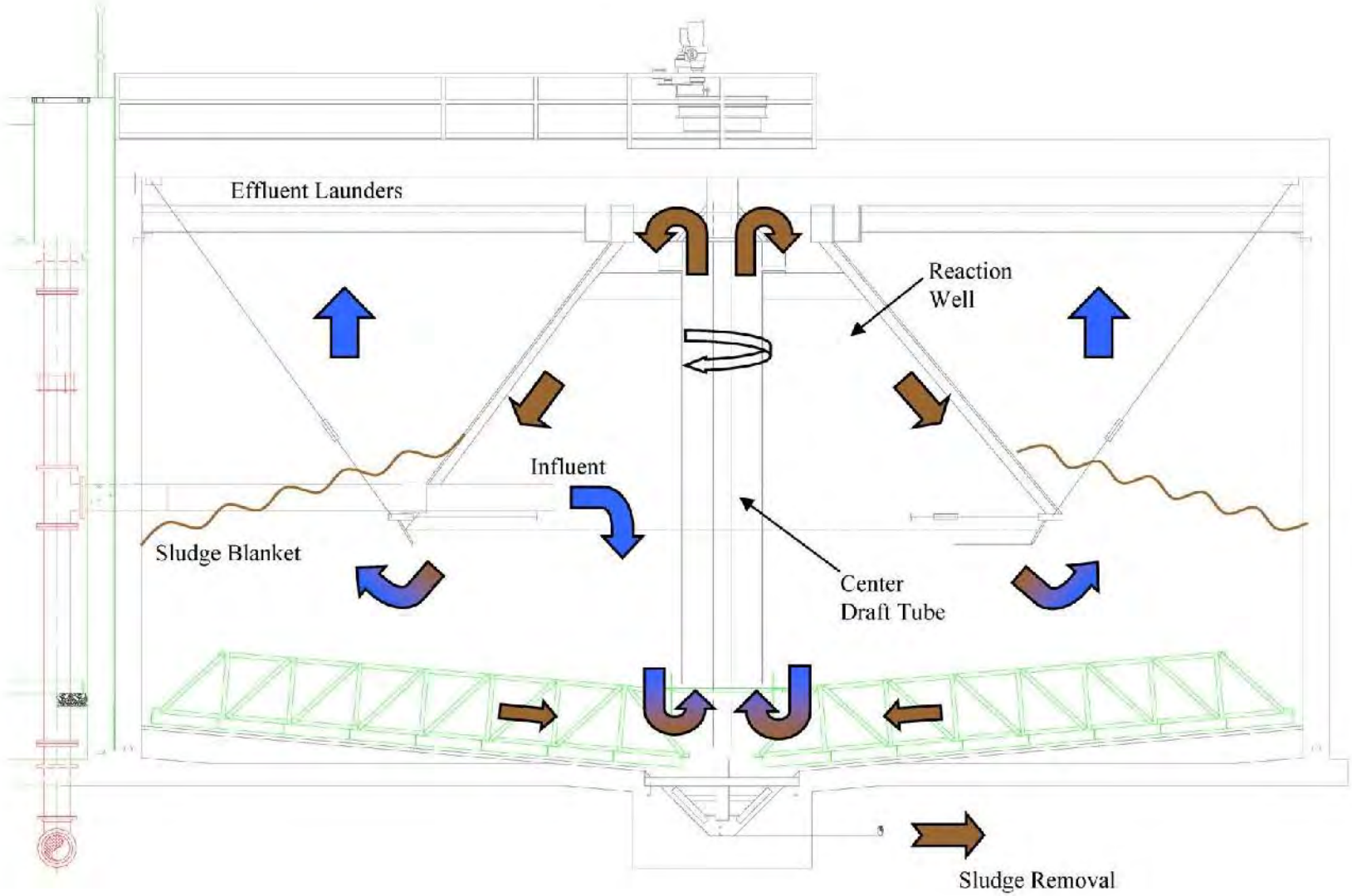

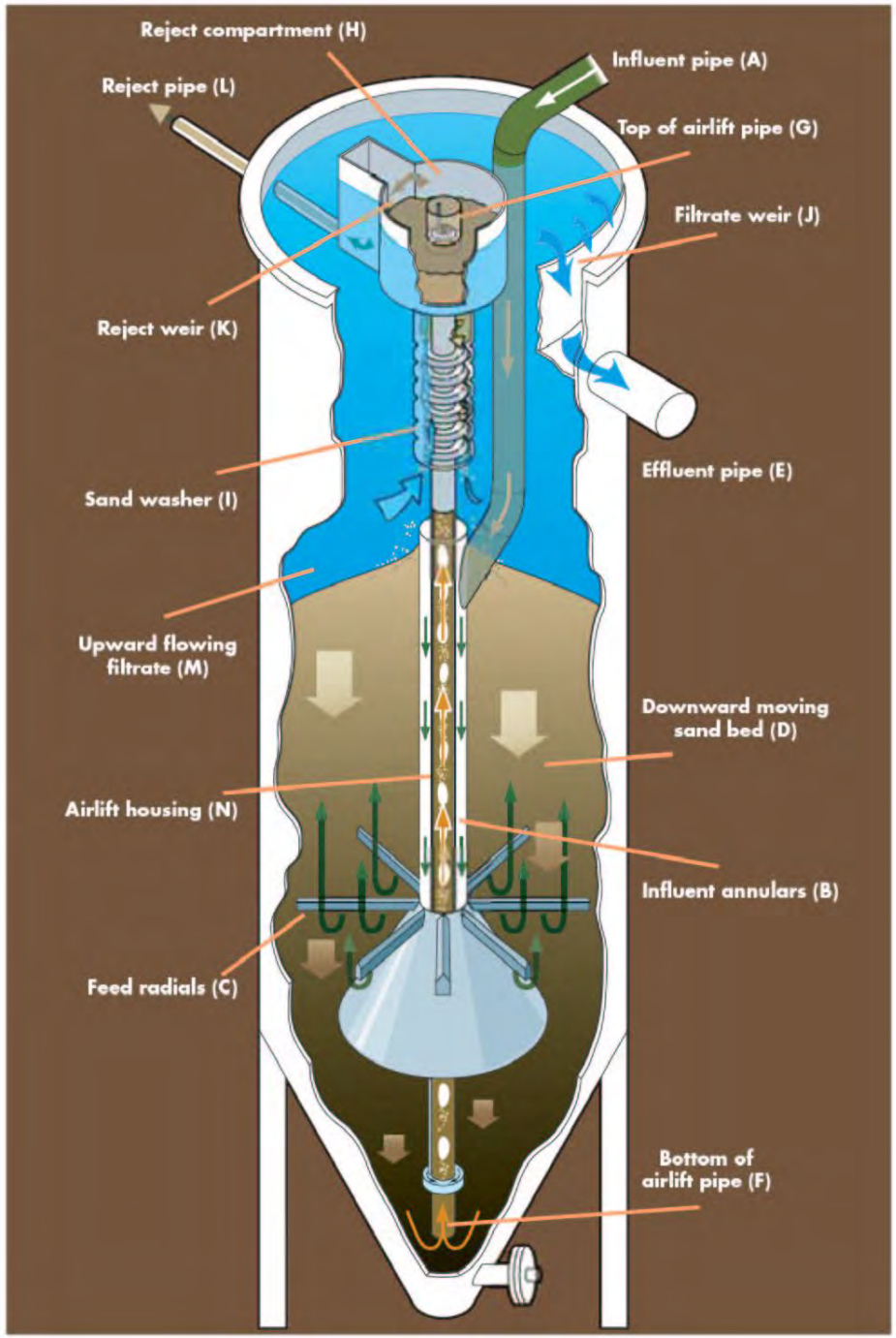

NAVFAC
Naval Facilities Engineering Command

Dynasand Filter (7)

- Continuous backwash
- Water flows up
- Sand moves down
- Backwash rate ea. filter is fixed

Naval Facilities Engineering Command

Water Losses:

- **19,000 gal/clarifier drains to filters**
- **Drained water conveyed to waste**
- **38,000 gal total lost ea. Shut-down**

Process Issues:

- Lime & Polymer dosage = ½ of targeted amounts
- Metering:
  - Raw water flow meter disabled by lightening strike
  - No metering of sludge blow-down

Summary of Waste Streams:

- Reject water from filters
- Clarifier blow-downs:
  - Supernatant
  - Settled solids
- Clarifier drainage following shutdowns

Waste Reduction Strategies:

- Minimize filter reject water
- Optimize blow-downs from clarifiers
- Minimize plant shut-downs

Minimize Filter Reject Water:

- Operate 4 filters at avg flow
- Within design surface loading rates
- 40% reduction in waste water
- $150,000/yr savings

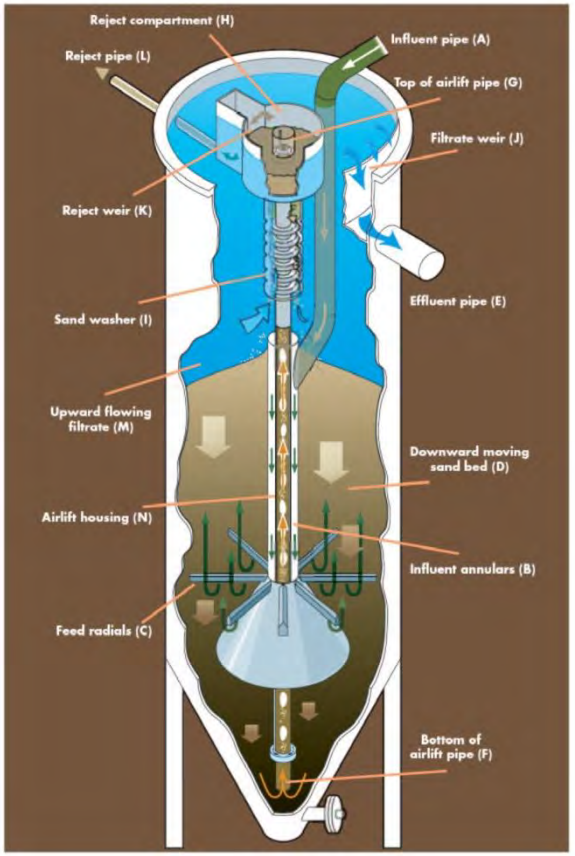

Optimize Blow-downs:

- Currently not process driven
- Currently controlled by limited sludge tank volume
- Interim solution:
  - Contract dewatering
  - Less $ than current waste hauler
  - Provide additional functional volume in tank
  - Provide operational experience for future on-site facility

5/6/2009

Minimize Plant Shutdowns:

- Most WTPs operate best 24/7
- Ea. shut-down:
  - Wastes water from drainage
  - 2 to 3 turnovers required to achieve steady-state
  - Results in water quality deterioration at ea. start up

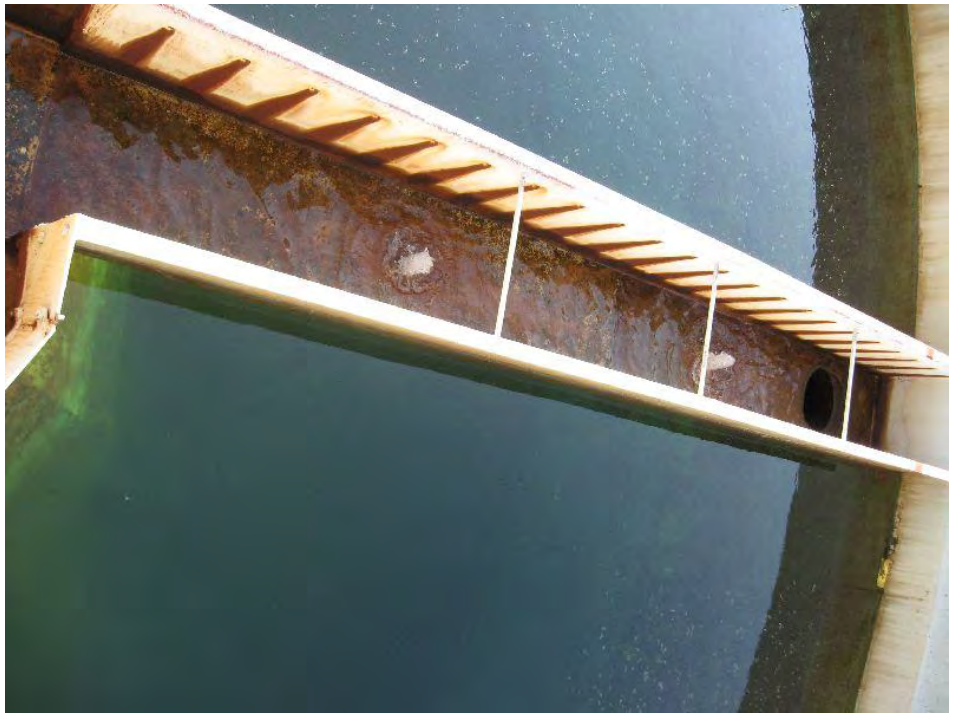

5/6/2009

Minimize Plant Shutdowns:

- Current Avg & Max Daily Rates = 25% & 50% of Design
- 24 hr operation would:
  - Maintain steady state conditions
  - Eliminate losses due to drainage of clarifiers
  - Require use of only 1 clarifier
  - Result in > $60,000/yr savings

5/6/2009

Long Term:

- Eliminate filter reject water discharge [recycle]
- Optimize chemical dosages
- Optimize clarifier blow-downs
- Eliminate clarifier blown-down supernatant discharge [recycle]
- Construct dewatering facility
- Continue 24/7 operation of WTP
- Note: Recycle alternatives should be pilot tested

5/6/2009

SUMMARY

	Reject Water From Filters	Sludge From Blow-Downs		Clarifier Draining After Shutdown
		Supernatant	Settled Solids	
Current Practice	Discharge to Sewer	Discharge to Sewer	Evacuation, Hauling	Discharge to Sewer
Interim Strategy	Operate filters at proper design loading rate of 4–5 gpm/ft^2 • Requires full-scale study • Requires operator training	Optimize chemical doses • Requires bench-testing • Requires operator training Optimize blow-down intervals and volume • Requires on-time evacuation of holding tank		Reduce plant shutdowns by operating the plant 24/7 through throttling plant flow • Requires plant repairs • Requires VFDs at well pumps
Long-Term Strategy to Eliminate Waste Stream	Recycle to head of plant • Requires full-scale study • Requires construction	Recycle to head of plant • Requires full-scale study • Requires construction	Construct dewatering facility • Requires optimization of chemical doses and blow-downs • Requires construction	

Questions?

5/6/2009