A MULTICHANNEL DUAL-MIXER STABILITY ANALYZER: PROGRESS REPORT*

Charles A. Greenhall, Albert Kirk, and Gary L. Stevens
Jet Propulsion Laboratory, California Institute of Technology
4800 Oak Grove Dr.
Pasadena, CA 91109, USA
E-mail: *Charles.Greenhall@jpl.nasa.gov, Albert.Kirk@jpl.nasa.gov, Gary.L.Stevens@jpl.nasa.gov*

Abstract

A stability analyzer is being developed for frequency standards in JPL's Deep Space Network. Prototype hardware and software have been built. Initial tests on 100-MHz sources show an Allan deviation noise floor of about 7×10^{-15} at 1 second for a dual-mixer channel.

1 MOTIVATION

JPL operates planetary spacecraft from three Deep Space Communications Complexes: one at Goldstone in the Mojave Desert, one near Madrid, and one near Canberra. Each complex has several frequency standards, including hydrogen masers, mercury trapped-ion standards, and cryogenic compensated sapphire oscillators (CSOs). We do not yet have a convenient, reliable method for keeping track of the stabilities of the oscillators at the remote sites. On the other hand, we have operated a multiple-channel measurement system for many years in our laboratory at JPL. In this system, some of the sources to be compared are lowered by 1 Hz in frequency by means of offset generators. These offset sources are mixed against the others to produce 1-Hz beat notes, whose zero crossings are captured by interval timers and converted to phase residuals.

Since the middle 1980s we have deployed a succession of field versions of the laboratory system. Owing mainly to computer and software problems, these systems have all been unsatisfactory to some degree, being cumbersome, inflexible, unreliable, expensive, and bug-infested in different combinations. In addition, although their noise floor (about 10^{-14} at 1 second) is low enough to characterize H masers and Hg ion traps, it is not low enough to measure (at 100 MHz) the stability of CSOs, estimated to be about 3×10^{-15} at 1 second. For these reasons, we are trying to design and implement a new measurement system, the Frequency Standards Stability Analyzer (FSSA), to meet our needs in the field and eventually, we hope, to replace our aging laboratory system.

*This work is being carried out by the Jet Propulsion Laboratory, California Institute of Technology, under a contract with the National Aeronautics and Space Administration.

Report Documentation Page

Form Approved
OMB No. 0704-0188

Public reporting burden for the collection of information is estimated to average 1 hour per response, including the time for reviewing instructions, searching existing data sources, gathering and maintaining the data needed, and completing and reviewing the collection of information. Send comments regarding this burden estimate or any other aspect of this collection of information, including suggestions for reducing this burden, to Washington Headquarters Services, Directorate for Information Operations and Reports, 1215 Jefferson Davis Highway, Suite 1204, Arlington VA 22202-4302. Respondents should be aware that notwithstanding any other provision of law, no person shall be subject to a penalty for failing to comply with a collection of information if it does not display a currently valid OMB control number.

1. REPORT DATE **NOV 2001**	2. REPORT TYPE	3. DATES COVERED **00-00-2001 to 00-00-2001**
4. TITLE AND SUBTITLE **A Multichannel Dual-Mixer Stability Analyzer: Progress Report**		5a. CONTRACT NUMBER
		5b. GRANT NUMBER
		5c. PROGRAM ELEMENT NUMBER
6. AUTHOR(S)		5d. PROJECT NUMBER
		5e. TASK NUMBER
		5f. WORK UNIT NUMBER
7. PERFORMING ORGANIZATION NAME(S) AND ADDRESS(ES) **California Institute of Technology,Jet Propulsion Laboratory,4800 Oak Grove Dr,Pasadena,CA,91109**		8. PERFORMING ORGANIZATION REPORT NUMBER
9. SPONSORING/MONITORING AGENCY NAME(S) AND ADDRESS(ES)		10. SPONSOR/MONITOR'S ACRONYM(S)
		11. SPONSOR/MONITOR'S REPORT NUMBER(S)

12. DISTRIBUTION/AVAILABILITY STATEMENT
Approved for public release; distribution unlimited

13. SUPPLEMENTARY NOTES
See also ADM001482. 33rd Annual Precise Time and Time Interval (PTTI) Systems and Applications Meeting, 27-29 Nov 2001, Long Beach, CA

14. ABSTRACT
see report

15. SUBJECT TERMS

16. SECURITY CLASSIFICATION OF:			17. LIMITATION OF ABSTRACT	18. NUMBER OF PAGES	19a. NAME OF RESPONSIBLE PERSON
a. REPORT **unclassified**	b. ABSTRACT **unclassified**	c. THIS PAGE **unclassified**	**Same as Report (SAR)**	**7**	

Standard Form 298 (Rev. 8-98)
Prescribed by ANSI Std Z39-18

2 SYSTEM ARCHITECTURE

Our current 1-Hz measurement systems are "single-mixer" systems, in that the phase residuals of different beat notes are not directly compared; to compare two sources, one must connect an offset generator (OSG) to one of them and generate a beat note. To achieve a simpler, cheaper system with a low noise floor, we are trying a dual-mixer architecture that requires only one offset source to be mixed against all the devices under test (DUTs), which stay on frequency [1]. Figure 1 shows a simplified block diagram of the FSSA. In order to capture the zero-crossing times of all the beat notes on a single time scale, we are taking advantage of event timers in the form of PC interface cards that have recently been developed. Our current design uses a Guide Technology sixteen-channel Time Interval Analyzer with a resolution of 20 ns. Up to seven 100-MHz DUTs (one of which will also serve as a reference) will be mixed against the output of the 100-Hz OSG. The eighth auxiliary channel will be used for a source at some other frequency, to be mixed against a synthesizer or a separate offset source.

3 OFFSET GENERATOR

Figure 2 shows the design of the offset generator we are now using to lower a 100-MHz signal by 100 Hz. It consists of two single-sideband mixer modules, separated by a bandpass filter and followed by a phase-locked cleanup loop. The overall principle is summarized by the equation $(1-x)(1+x) = 1-x^2$, where $x = 10^{-3}$. (The same principle, with $x = 10^{-4}$, is used in our 1-Hz systems.). The two SSB mixer modules are identical except for a jumper that determines which sideband is extracted (see the plus and minus signs in Figure 2). The output of the second mixer module has a carrier at 100 MHz − 100 Hz plus spurs with relative amplitude $1/3^2$ (−19 dBc) at carrier + 400 Hz, $1/5^2$ at −400 Hz, $1/7^2$ at +800 Hz, $1/9^2$ at −800 Hz, and so forth. The purpose of the cleanup loop is to attenuate these spurs; otherwise, they would affect the zero crossings if a DUT were slightly off frequency, even if it were perfectly stable. In addition, the VCO must have low phase noise; as discussed below, part of the dual-mixer noise floor comes from the VCO noise in narrow bands about harmonics of the beat frequency.

4 DUAL-MIXER PROCESSING

In the dual-mixer architecture, the phase residuals derived from two individual beat notes (1 and 2, say) are subtracted from each other by software, giving the phase of source 1 minus the phase of source 2. For the phase of the common offset source to be effectively cancelled by this subtraction, the beat frequency (100 Hz in the prototype design) should be considerably greater than the intended measurement bandwidth (default 1 Hz). The nth zero crossing t_n of one channel gives rise to a raw single-mixer phase residual $\xi(t_n)$ (in cycles) by the formula

$$\xi(t_n) = n - \nu_b t_n, \tag{1}$$

where ν_b is the nominal beat frequency. The essential term on the righthand side is n, which is exactly the total beat phase sampled at time t_n; the other term is just a gross frequency offset to make the numbers come out smaller. The raw phase residuals of the two channels are then distilled in real time to averaged phase residuals on a uniform time grid with spacing τ_s, the sample period (default 0.5 s, to achieve a 1-Hz bandwidth). Figure 3 shows how this is done by a numerical integration of the linearly interpolated phase residual functions. The τ_s-grid is the same for all channels, so that the averaged single-mixer phase residuals of two channels, $\bar{\xi}_1(k\tau_s)$ and $\bar{\xi}_2(k\tau_s)$,

can be subtracted to give the dual-mixer phase residuals $\bar{\xi}_{12}(k\tau_s)$ for source 1 minus source 2. Equation (3) below estimates the phase noise variance owing to incomplete cancellation of the noise of the common source.

5 NOISE FLOOR CALCULATIONS

We have been able to estimate the contributions of two noise sources: timer quantization and common-source noise. Their effects are given approximately by the following formulas for the standard deviation of averaged dual-mixer phase, now in radians:

$$\sigma_{\phi,\mathrm{qu}} = 2\pi q\sqrt{\frac{\nu_b}{6\tau_s}} \quad \text{(quantization)} \tag{2}$$

$$\sigma_{\phi,\mathrm{cs}} \leq \sqrt{2\sum_{m\neq 0}\frac{|G((m-1)\nu_b)|^2}{|G(\nu_b)|^2}p(m\nu_b)} \quad \text{(common source)} \tag{3}$$

[2], where q is the timer resolution (20 ns), $G(\nu)$ is the transfer function of the lowpass mixing filter, $p(\nu)$ is the spectral power, relative to carrier power, of the offset source in a band of width $1/\tau_s$ at frequency ν from the carrier, and the summation is over nonzero (positive and negative) m. Assume that $p(m\nu_b)\tau_s \leq -134\,\mathrm{dBc/Hz}$ for $m \neq 0$ (from a measurement of the VCO that we are now using in the cleanup loop), and let G be a single-pole lowpass filter with 3-dB bandwidth $3\nu_b$. Then $\sigma_{\phi,\mathrm{qu}} = 7.3\times 10^{-7}$ radian, $\sigma_{\phi,\mathrm{cs}} \leq 1.2\times 10^{-6}$ radian. With white PM assumed, these values map to Allan deviations 2.0×10^{-15} at 1 second for quantization, 3.4×10^{-15} for common source. Their RSS is 3.9×10^{-15}, which is close to the performance we desire. To improve it, it might be feasible to trade off these two noise components against each other by adjusting ν_b. Also, we might eventually use a timer with a smaller q, especially for a laboratory system.

This computation does not include the effect of spurs produced by the single-sideband mixers and attenuated by the cleanup loop; although (3) includes their effect on the long-term phase noise variance, their effect on Allan deviation is harder to determine because they appear as slow phase variations that depend on the behavior of the sources under test. They are unlikely to affect the noise floor below an averaging time of 100 s.

6 NOISE FLOOR TEST

We have built enough hardware and software to set up and evaluate a three-channel prototype system. For our first test, one H maser 100-MHz signal was split into the OSG and the three DUT inputs; the beat notes went to channels 0, 2, and 4 of the event-timer card. The bandwidth of the OSG cleanup loop was 3 Hz. Figure 4 shows the result of a 1370-second run. The upper plot shows the first 50 seconds of the phase residuals (scaled to time residuals at 100 MHz) for single-mixer channels 0, 2, and 4 minus the offset source; the middle plot shows the corresponding phase residuals for dual-mixer channels 0-2, 0-4, 2-4. The lower plot shows the Allan deviations of all six phase-residual time series for the whole run. The dual-mixer cancellation makes the 1-second instability smaller by a factor between 29 and 38. As averaging time increases, however, the dual-mixer phase residuals depart more and more from a white PM model; we hope to be able to reduce these longer-term noise effects.

7 CONCLUSIONS

The first noise floor test gave short-term stability results that are about the same as those from our laboratory 1-Hz measurement system, 7×10^{-15} at 1 second. Although this is more than two times greater than our noise-floor goal, it is adequate for all our frequency sources except CSOs at 100 MHz; two of these, however, can be tested separately at 800 MHz in the auxiliary single-mixer channel because their design incorporates an output synthesizer.

Attempts to improve the system are underway. We have not yet experimented with the cleanup-loop bandwidth. It might be feasible (and it would certainly be cheaper) to use a commercial synthesizer in place of the in-house offset generator. We have not yet decided on the computer and software architecture, so much a problem in the past.

In summary, we assert that the FSSA design has been validated, and we intend to proceed with improvements, development, and production during the coming year.

8 REFERENCES

[1] S. Stein, D. Glaze, J. Gray, D. Hilliard, D. Howe, and L. A. Erb, 1983, *"Automated high-accuracy phase measurement system,"* **IEEE Transactions on Instrumentation and Measurement 32,** 227-231.

[2] C. A. Greenhall, 2000, *"Common-source phase noise of a dual-mixer stability analyzer,"* TMO Progress Report 42-143, Jet Propulsion Laboratory, Pasadena, California, USA, November 2000 (*http://tmo.jpl.nasa.gov/tmo/progress_report/42-143/143K.pdf*).

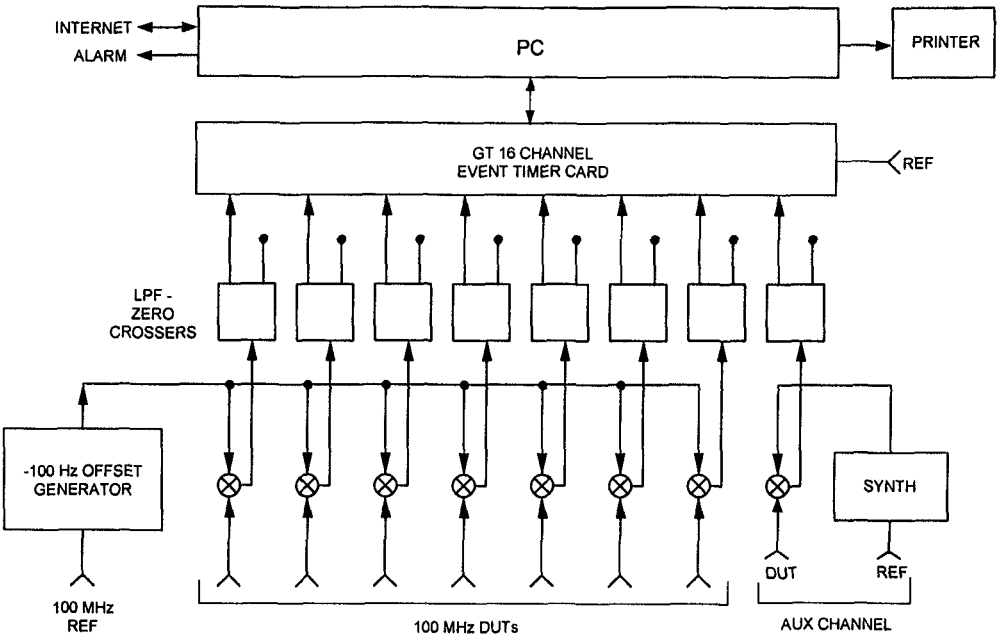

Fig. 1. Stability analyzer architecture

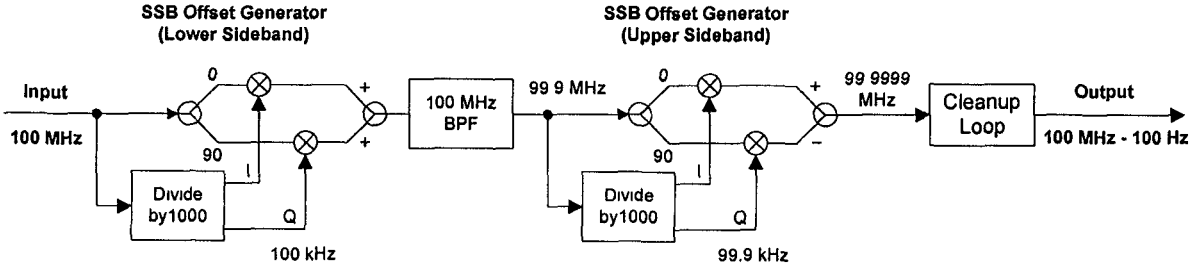

0.999 × 1.001 = 0.999999

Fig. 2. Offset generator for lowering a 100-MHz source by 100 Hz. Two cascaded single-sideband mixers are followed by a phase-locked cleanup loop with a low-noise VCXO.

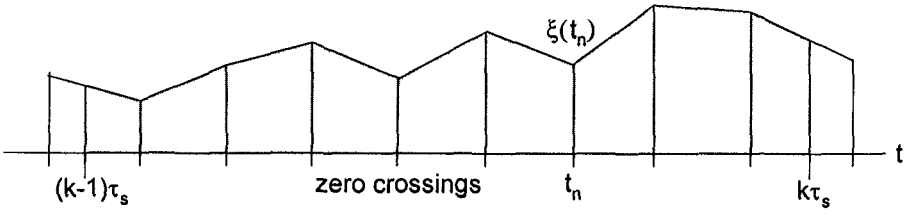

Fig. 3. A beat-note zero crossing at t_n gives rise to a phase residual $\xi(t_n)$. Between the zero crossings, the phase is interpolated linearly. The average phase for the interval $[(k-1)\tau_s, k\tau_s]$ is the shaded area divided by τ_s.

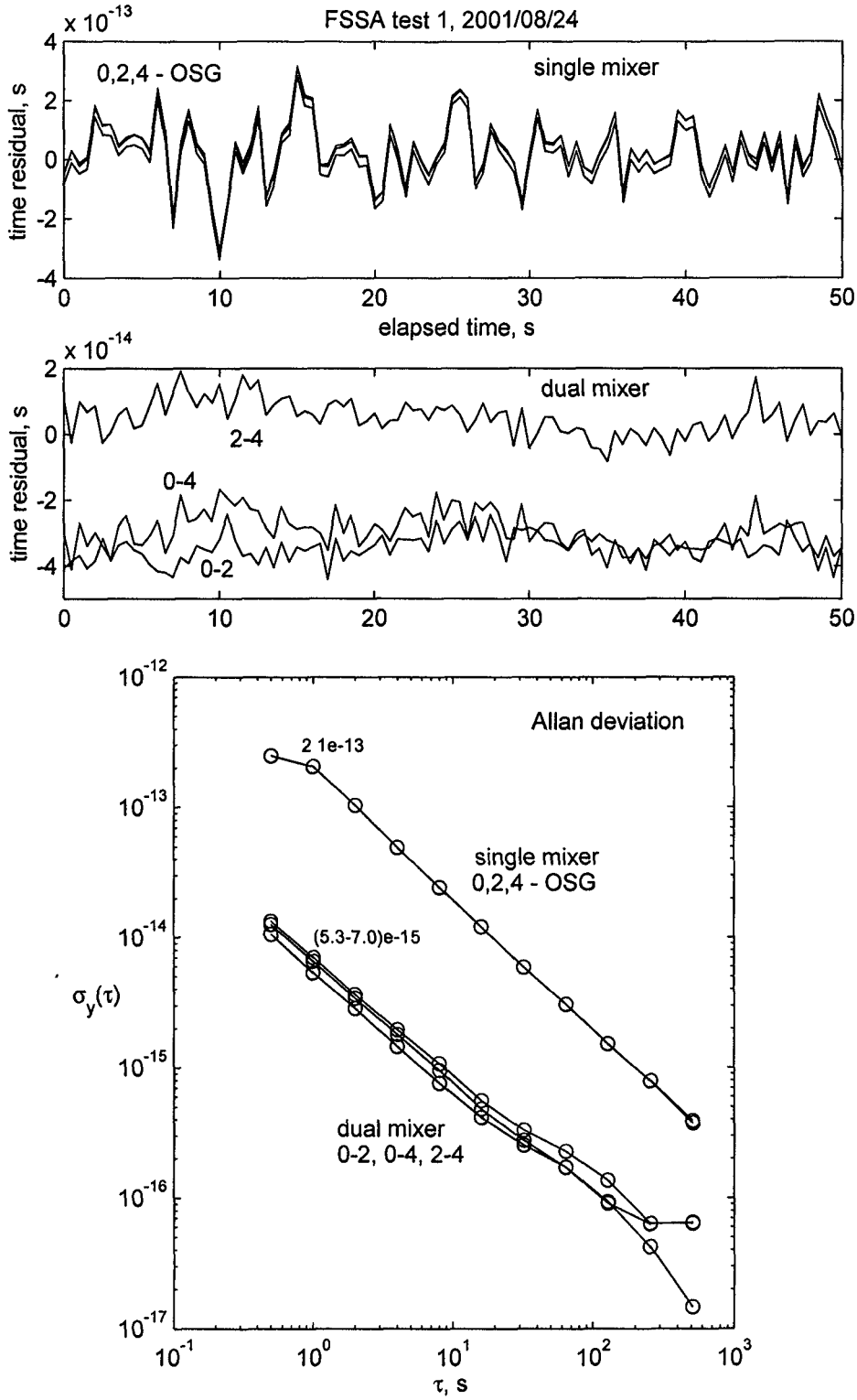

Fig. 4. Results of the first noise floor test

QUESTIONS AND ANSWERS

SAM STEIN (Timing Solutions Corporation): Chuck, since your machine measures the average phase in each half-second interval, the number that you get for the 1-second performance, isn't that really much more a Modified Allan variance than an Allan variance?

CHUCK GREENHALL: No, the half-second interval simply establishes the measurement bandwidth. I am not averaging two of those to get a 1-second average. It is just like I have a sequence of phases, sampled at half-second intervals. And then I just put those into the regular Allan variance algorithm.

STEIN: But your sequence of phases is 50 10-millisecond phases averaged over that half-second when you compete the area.

GREENHALL: Yes.

STEIN: And if you look at the definition of Modified Allan variance, that is what it is.

GREENHALL: Oh, I see what you mean. You are thinking about what it is doing to the original beat note phase residuals. Is that correct? Yes, I agree. But you see, I am not continuing the Modified Allan variance, I am going to a larger τ.

STEIN: That's correct. You don't continue beyond 1 second. You are using the Modified Allan variance at 1 second and then you are using something else everywhere else.

GREENHALL: Well, it's Allan variance for those phase residuals.

STEIN: Yes.

DAVE HOWE (National Institute of Standards and Technology): This is probably a question for Al. The 100-hertz offset, is that derived from one of the input signals?

ALBERT KIRK (Jet Propulsion Laboratory): The 100-hertz offset is derived from probably our primary standard at the station, right. It is one of those that we are measuring.