NPS-CS-08-009

# NAVAL POSTGRADUATE SCHOOL

**MONTEREY, CALIFORNIA**

# Technical Report

**A COMPARATIVE ANALYSIS OF GUIDANCE LAWS FOR BOOST-PHASE BALLISTIC MISSILE INTERCEPT USING EXO-ATMOSPHERIC KILL VEHICLES**

by

Sang-Keun Jang
Phillip E. Pace
Robert G. Hutchins
James B. Michael

May 2008

**Approved for public release; distribution is unlimited.**

THIS PAGE INTENTIONALLY LEFT BLANK

**NAVAL POSTGRADUATE SCHOOL**
**Monterey, California 93943-5000**

Daniel T. Oliver
President

Leonard A. Ferrari
Executive Vice President and
Provost

This report was prepared for U.S. Missile Defense Agency
and funded by U.S. Missile Defense Agency

Reproduction of all or part of this report is authorized.

This report was prepared by:

Sang-keun Jang
Visiting researcher

Phillip E. Pace
Professor, EC Department

Robert G. Hutchins
Professor, EC Department

James B. Michael
Professor, CS Department

Reviewed by:

Peter Denning, Chair
Department of Computer Science

Released by:

Dan C. Boger
Interim Associate Provost and
Dean of Research

THIS PAGE INTENTIONALLY LEFT BLANK

| REPORT DOCUMENTATION PAGE | Form Approved OMB No. 0704-0188 |
|---|---|

Public reporting burden for this collection of information is estimated to average 1 hour per response, including the time for reviewing instruction, searching existing data sources, gathering and maintaining the data needed, and completing and reviewing the collection of information. Send comments regarding this burden estimate or any other aspect of this collection of information, including suggestions for reducing this burden, to Washington headquarters Services, Directorate for Information Operations and Reports, 1215 Jefferson Davis Highway, Suite 1204, Arlington, VA 22202-4302, and to the Office of Management and Budget, Paperwork Reduction Project (0704-0188) Washington DC 20503.

| 1. AGENCY USE ONLY *(Leave blank)* | 2. REPORT DATE<br>April 2008 | 3. REPORT TYPE AND DATES COVERED<br>Technical report |
|---|---|---|

| | |
|---|---|
| **4. TITLE AND SUBTITLE**: **A COMPARATIVE ANALYSIS OF GUIDANCE LAWS FOR BOOST-PHASE BALLISTIC MISSILE INTERCEPT USING EXO-ATMOSPHERIC KILL VEHICLES** | **5. FUNDING NUMBERS** |
| **6. AUTHOR(S)** Sang-Keun Jang, Phillip E. Pace, Robert G. Hutchins, James B. Michael | |
| **7. PERFORMING ORGANIZATION NAME(S) AND ADDRESS(ES)**<br>Center for Joint Services Electronic Warfare<br>Naval Postgraduate School<br>Monterey, CA 93943-5000 | **8. PERFORMING ORGANIZATION REPORT NUMBER** |
| **9. SPONSORING /MONITORING AGENCY NAME(S) AND ADDRESS(ES)**<br>U.S. Missile Defense Agency<br>7100 Defense Pentagon, Washington D.C. 20301-7100 | **10. SPONSORING/MONITORING AGENCY REPORT NUMBER** |

**11. SUPPLEMENTARY NOTES** The views expressed in this report are those of the author and do not reflect the official policy or position of the Department of Defense or the U.S. Government.

| 12a. DISTRIBUTION / AVAILABILITY STATEMENT | 12b. DISTRIBUTION CODE |
|---|---|
| Approved for public release; distribution is unlimited. | A |

**13. ABSTRACT (maximum 200 words)**

Boost-phase intercept of a threat intercontinental ballistic missile (ICBM) is the first layer of a multi-layer missile defense strategy. Space-based interceptors possess certain kinematic advantages over ground-based interceptors in defeating an ICBM threat during boost phase. This paper explores the performance of various guidance laws that might be used by an exo-atmospheric kill vehicle (EKV) launched from a space platform to defeat a hostile, ground-launched ICBM during boost phase. Proportional navigation guidance, bang-bang guidance and predictive guidance are all investigated using simulated missile and EKV trajectories. Performance results are presented with respect to miss distance, intercept time, launch envelope, and total control effort. The total control effort is directly related to fuel consumption, and smaller values translate to less weight in fuel or longer potential intercept ranges. Large launch envelopes mean fewer required EKV carriers. In general, the predictive guidance algorithm outperformed the other guidance algorithms in these simulations, but it did prove to be sensitive to time-to-go errors.

| | |
|---|---|
| **14. SUBJECT TERMS** Spaced-based Missile Defense, Boost-phase Missile Defense, Space Launch Vehicle, Exo-atmospheric Kill Vehicle, Predictive Guidance, Zero-effort Miss-distance, Proportional Navigation Guidance, Bang-bang Guidance, Divert Thruster | **15. NUMBER OF PAGES**<br>61 |
| | **16. PRICE CODE** |

| 17. SECURITY CLASSIFICATION OF REPORT | 18. SECURITY CLASSIFICATION OF THIS PAGE | 19. SECURITY CLASSIFICATION OF ABSTRACT | 20. LIMITATION OF ABSTRACT |
|---|---|---|---|
| Unclassified | Unclassified | Unclassified | UU |

NSN 7540-01-280-5500

Standard Form 298 (Rev. 2-89)
Prescribed by ANSI Std. 239-18

THIS PAGE INTENTIONALLY LEFT BLANK

**Approved for public release; distribution is unlimited.**

# A COMPARATIVE ANALYSIS OF GUIDANCE LAWS OF SPACE-BASED INTERCEPTOR FOR BOOST-PHASE BALLISTIC MISSILE

Sang-Keun Jang
Phillip E. Pace
Robert G. Hutchins
James B. Michael

**Electrical and Computer Engineering Department**

from the

**NAVAL POSTGRADUATE SCHOOL**
**April 2008**

# ABSTRACT

Boost-phase intercept of a threat intercontinental ballistic missile (ICBM) is the first layer of a multi-layer missile defense strategy. Space-based interceptors possess certain kinematic advantages over ground-based interceptors in defeating an ICBM threat during boost phase. This paper explores the performance of various guidance laws that might be used by an exo-atmospheric kill vehicle (EKV) launched from a space platform to defeat a hostile, ground-launched ICBM during boost phase. Proportional navigation guidance, bang-bang guidance and predictive guidance are investigated using simulated missile and EKV trajectories. Performance results are presented with respect to miss distance, intercept time, launch envelope, and total control effort. The total control effort is directly related to fuel consumption, and smaller values translate to less weight in fuel or longer potential intercept ranges. Large launch envelopes mean fewer required EKV carriers. In general, the predictive guidance algorithm outperforms the other guidance algorithms in these simulations, but it did prove to be sensitive to time-to-go errors.

# TABLE OF CONTENTS


I. INTRODUCTION....1

II. ICBM DYNAMICS AROUND A ROTATING EARTH....4
A. BOOSTING TARGET MODELING....4
1. BOOSTING ICBM MATHEMATICAL MODELLING....4
2. Initial Values of ICBM Launch Angles....6

III. EKV AND EKV CARRIER MODELLING....11
A. INTERCEPTOR MISSILE MODELING....11

IV. EKV GUIDANCE METHODS....14
DESCRIPTION OF THE SCENARIO....14
A. COORDINATE SYSTEMS AND COORDINATE CONVERSIONS....14
B. PROPORTIONAL NAVIGATION GUIDANCE....16
C. BANG-BANG GUIDANCE....17
D. PREDICTIVE GUIDANCE....17

V. SIMULINK SIMULATION MODEL DESCRIPTION....20
1. Simulation Initialization....20
2. SIMULINK® Model Description....21
3. ICBM Dynamics Subsystem....22
4. Seeker Subsystem....23
5. Guidance Subsystem....24
6. EKV Dynamics Subsystem....25

VI. COMPARISON OF GUIDANCE LAWS....27
A. SIMULATION RESULTS FOR PROPORTIONAL NAVIGATION GUIDANCE....27
B. SIMULATION RESULTS OF THE PREDICTIVE GUIDANCE....28
1. Predictive guidance with zero-effort-miss using LOS rate of the seeker....28
2. Predictive guidance with zero-effort-miss prediction using target and missile velocity and range....29
C. COMPARISON SUMMARY OF SIMULATION RESULTS....30
D. LAUNCH ENVELOPE....32

VII. GUIDANCE COMMAND GENERATION BY BURN TIME CONTROL OF DIVERT THRUSTER....34

VIII. SUMMARY....37

IX. RECOMMENDED FUTURE WORK....38

APPENDIX A. CODE FLOW CHART....39

LIST OF REFERENCES....48

INITIAL DISTRIBUTION LIST....50

# LIST OF FIGURES


Figure 1. Overall space-based ICBM defense scenario. .....3
Figure 2. Launch parameter geometry .....6
Figure 3. Raytheon's exo-atmospheric kill vehicle.....12
Figure 4. Orbital plane and the intercept geometry.....13
Figure 5. Coordinates geometry: ECEF coordinate system, LOS plane, ABC system...15
Figure 6. Block diagram of PNG.....16
Figure 7. Block diagram of predictive guidance using target and missile information ..18
Figure 8. Block diagram of predictive guidance using seeker LOS rate.....19
Figure 9. Overall space-based intercept SIMULINK® model.....22
Figure 10. SIMULINK® model for ICBM Dynamics.....23
Figure 11. SIMULINK® model for Seeker design of the EKV.....24
Figure 12. SIMULINK® model for Guidance Unit of the EKV. .....25
Figure 13. SIMULINK® model for EKV Dynamics.....26
Figure 14. Guidance command and trajectory of PNG .....27
Figure 15. Guidance command and trajectory of predictive guidance using seeker LOS rate .....29
Figure 16. Guidance command and trajectory of predictive guidance with ZEM prediction .....30
Figure 17. Comparison of trajectories and total control efforts .....32
Figure 18. Block diagram of EKV guidance using burn time control .....34
Figure 19. Trajectories and total control efforts with burn time control.....35
Figure 20. Zero-effort-miss profile with burn time control.....36
Figure 21. Pulse width of burn time with burn time control (upper:pitch, lower:yaw) ....36

# LIST OF TABLES

Table 1. Azimuth launch angles for launch attitude .....14
Table 2. Propellant mass and mass fractions of the ICBM.....16
Table 3. Code listing for the SIMULINK model.....26
Table 4. Performance index of PNG. .....33
Table 5. Performance index of predictive guidance using seeker LOS rate. .....34
Table 6. Miss distance wrt time-to-go error in PREDG using seeker LOS rate.....34
Table 7. Performance index of predictive guidance using zero effort miss.....35
Table 8. Miss distance wrt time-to-go error in PREDG using zero effort miss.....36
Table 9. Overall summary of the performance indices.....37
Table 10. Allowable launch zone of PNG and PREDICTIVE(2).....38

# I. INTRODUCTION

The objective of this paper is to show the performance comparison between various guidance laws which could be used by a space launched interceptor to engage and destroy a hostile ICBM during its boosting phase. The interceptor in this research is an exo-atmospheric kill vehicle (EKV), which is modeled as a point mass using divert thrusters to achieve velocity changes. The guidance laws to be compared are proportional navigation, bang-bang, and predictive guidance. Proportional navigation is a robust algorithm that is widely used in all forms of intercept guidance, and it acts as our baseline in this study. The performance analysis of proportional navigation guidance was shown by Paul Zarchan[1] in tactical and strategic missile design through linear analysis or adjoint method in various conditions. Bang-bang guidance is generally not used inside the atmosphere because it tends to produce excessive drag on the interceptor, but this disadvantage does not apply to an EKV. In the hybrid guidance for the ballistic missile intercept, Aydin[2] tried the bang-bang guidance at the initial guidance only to turn the missile quickly toward the target. Bang-bang control usually leads to minimum time intercept, and it was felt initially that this might lead to lower control effort. Also, bang-bang guidance requires any divert thruster to always fire at its maximum value or not at all, which is how many divert thrusters are actually designed to operate. Predictive guidance relies on utilizing more information about target kinematics, especially time-to-go information, and it is expected to utilize less control effort as a consequence. Paul Zarchan established the equations of predictive guidance using zero-effort-miss that reflects the correct target and missile information[5]. It also showed the superiority of the predictive guidance as "mother of all guidance laws" in which the predicted intercept is calculated in flight by rapidly integrating the nonlinear missile and target equations forward in flight at each guidance update[3]. Hari B. Hablani studied the predictive guidance in ballistic missile intercept using the seeker line-of-sight rate and burn time control of divert thruster. It showed some superiority of predictive guidance in the respect of less control effort[4]. This paper investigates these guidance laws using acceleration command loop in the

space-based EKV and shows the comparisons in various performance parameters through computer simulation using matlab and simulink.

The performance measures used for comparison are miss distance, total control effort, intercept time, and launch envelope. Most proposals for EKV systems use a hit-to-kill architecture. Hence, miss distance must be small enough to actually hit the target. Larger miss distances are deemed unacceptable. A space-based EKV carrier needs to maximize the number of interceptors it can carry within limited volume and mass to optimize mission effectiveness. Therefore, minimizing fuel consumption, which means minimizing total control effort, can reduce both volume and mass for each individual EKV. Both total control effort and intercept time were studied for each guidance algorithm. The launch envelope of a single EKV interceptor is an important performance parameter because, for a given level of coverage, the required number of EKV carriers decreases as the launch envelope of each EKV interceptor increases.

The overall space-based ICBM defense scenario is illustrated in Figure 1. In this scenario, several EKV carriers are placed in low-earth orbit to cover all possible ICBM threats. A hostile ICBM launch is detected by IR sensors in geosynchronous orbit and subsequently tracked by a network of RF sensors in various locations, as depicted in the diagram. The track information is fused at a central location where an engagement decision can be made. When an interceptor launch decision is made, the EKV is launched from the appropriate EKV carrier onto a collision trajectory. The guidance method and application will be discussed in Section IV.

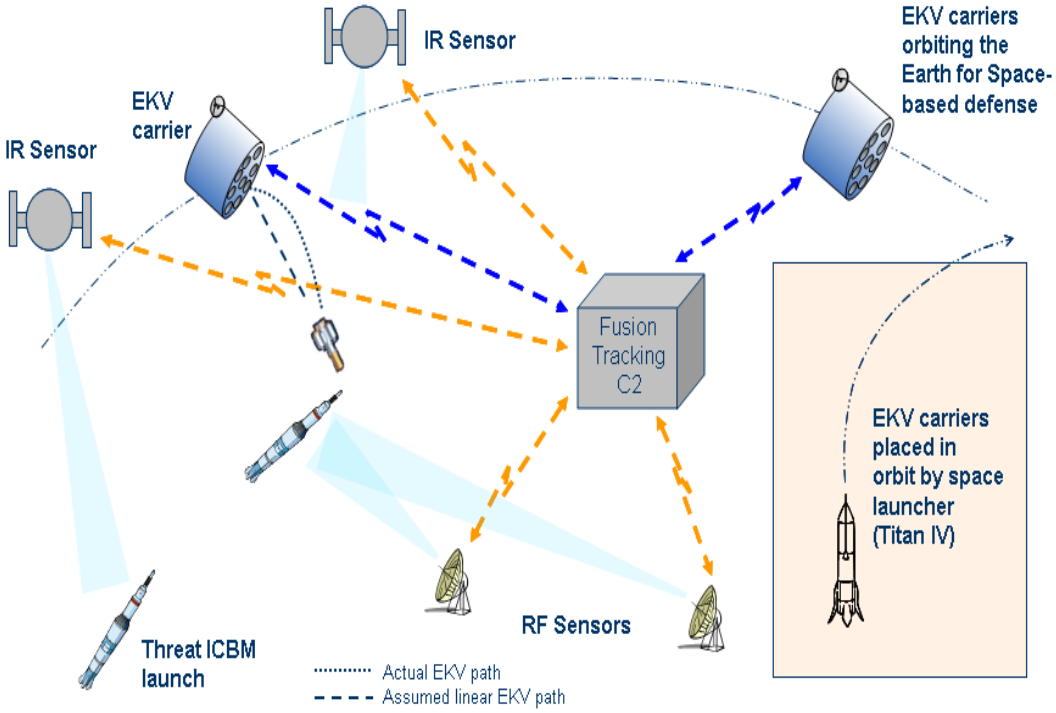


Figure 1. Overall space-based ICBM defense scenario.

In this study, the exo-atmospheric kill vehicle (EKV) is required to hit the hostile ICBM for a successful intercept to occur. The acceleration guidance commands are generated using thrusters in the vertical and horizontal dimensions on the EKV, which is modeled as a point mass in these simulations. All simulations have been implemented using MATLAB and SIMULINK.

# II. ICBM DYNAMICS AROUND A ROTATING EARTH

The target ICBM in this study is a solid propellant, three stage, boosting missile reaching speeds above $6\ \mathrm{km/s}$ at the end of its boost phase. The trajectory of the ICBM is derived as a function of the thrust that is generated by the solid propellant, the gravitational effects, the atmospheric drag and the rotation of the earth. The ICBMs are assumed to be launched from a hostile location in the west Pacific targeting San Francisco, California.

## BOOSTING TARGET MODELING

The drag forces acting on the missile and the angular velocity resulting from the earth's rotation are considered, and a closed form solution is generated as a function of these forces, along with the thrust and the weight.

### 1. BOOSTING ICBM MATHEMATICAL MODELLING

In this section, we derive the mathematical model for a boosting ICBM that takes the earth's rotation and the atmospheric drag into account. Kashiwagi derives a full mathematical model for re-entry vehicles, where the non-accelerating vehicle is released from space[5]. We adopt his derivation for ground-based boosting ICBMs by adding the thrust force generated by the solid propellant fuel.

The state vector of the ICBM is defined as a function of its position and velocity and denoted by

$$X = \begin{bmatrix} x & y & z & V_x & V_y & V_z \end{bmatrix}^T = \begin{bmatrix} x & y & z & \dot{x} & \dot{y} & \dot{z} \end{bmatrix}^T \tag{1}$$

Representing these equations in $\dot{X} = FX\left(t - t_0\right)$ format will require defining the state transition matrix $F$ . The transition matrix is given by

$$F = \begin{bmatrix} 0 & 0 & 0 & 1 & 0 & 0 \\ 0 & 0 & 0 & 0 & 1 & 0 \\ 0 & 0 & 0 & 0 & 0 & 1 \\ \omega^2 - \frac{GM}{r^3} & 0 & 0 & \frac{\dot{m}gI_{sp}}{m|V|} - \frac{\rho g}{2\beta} & 2\omega\sin\mu & -2\omega\cos\mu \\ 0 & \omega^2\sin\mu - \frac{GM}{r^3} & -\omega^2\sin\mu\cos\mu & -2\omega\sin\mu & \frac{\dot{m}gI_{sp}}{m|V|} - \frac{\rho g}{2\beta} & 0 \\ 0 & -\omega^2\sin\mu\cos\mu & \omega^2\cos(\mu) - \frac{GM}{r^3} & 2\omega\cos\mu & 0 & \frac{\dot{m}gI_{sp}}{m|V|} - \frac{\rho g}{2\beta} \end{bmatrix} \tag{2}$$

where

$\omega$ : earth rotation rate (2π/day)

$G$ : gravitational constant of earth ($6.67\times10^{-11}$)

$M$ : mass of earth ($5.98\times10^{24}$ kg)

$r$ : distance of the target from earth's center(km)

$\dot{m}$ : mass change rate of the target ICBM (kg/s)

$I_{sp}$ : specific impulse of the target ICBM(sec)

$m$ : total mass of the target ICBM(kg)

$|V|$ : magnitude of the velocity of the ICBM(km/sec)

$\rho$ : atmospheric density (kg/m$^3$)

$\beta$ : ballistic coefficient

$\mu$ : geodetic latitude of the target ICBM(radian)

The parameter $t$ is the time of interest and $t_o$ is the initial time.

The initial state space vector of the ICBM is given in equation(3).

$$X_T = \begin{bmatrix} x_T \\ y_T \\ z_T \\ \dot{x}_T \\ \dot{y}_T \\ \dot{z}_T \end{bmatrix} = \begin{bmatrix} -3029966.67 \\ 3737980.67 \\ 4186406.53 \\ -279.69 \\ 20.81 \\ 479.46 \end{bmatrix}_{ECEF} \tag{3}$$

2. Initial Values of ICBM Launch Angles

The azimuth launch angle $C$ is measured in the topo-centric coordinate system from the North Pole to the tip of the missile. The measurement is taken from north to east. Consider the triangle ABC shown in Figure 2 as the launch geometry, where C is the launch point and B is the target location. The North Pole is denoted by A in this geometry. The initial azimuth launch angle of the ICBM is denoted by $C$.

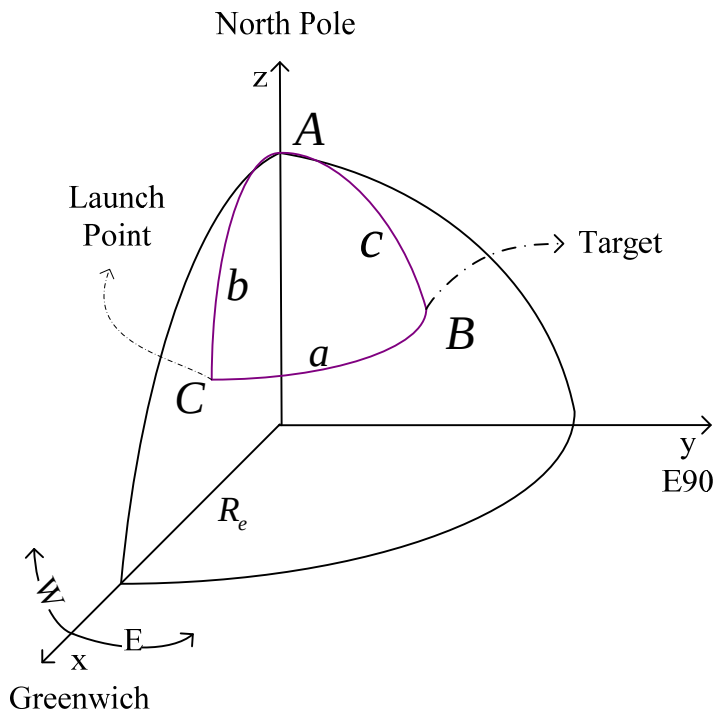


Figure 2. Launch parameter geometry.

The lowercase letters in Figure 2 correspond to the angles subtended by the arcs measured form the center of the earth. The capital letters in Figure 2 correspond to the angles formed by the intersecting arcs. Note that angle $C$ is the azimuth launch angle. Using the law of sines, we can obtain the relationship among the angles as

$$\frac{\sin a}{\sin A} = \frac{\sin c}{\sin C}$$

By rearranging above, the azimuth launch angle can be written as

$$\tan C = \frac{\sin c \sin A}{\sin a \cos C}$$

The denominator of above can be shown to be a function of angles *a*, *b* and *c* as given by

$$\sin a \cos C = \frac{\cos c - \cos a \cos b}{\sin b}$$

from the law of cosines: $\cos c = \cos a \cos b + \sin a \sin b \cos C.$ By substituting, the azimuth launch angle is obtained as

$$\tan C = \frac{\sin c \sin b \sin A}{\cos c - \cos a \cos b}$$

The angles *A*, *b* and *c* are defined by the target location and the launch site location. The only unknown in above is the $\cos a$ term, which in turn can be written as a function of the known parameters by using the following law of cosines:

$$\cos a = \cos b \cos c + \sin b \sin c \cos A$$

The known angles mentioned above are defined using the geodetic locations of the target and the launch site as

$$A = \lambda - \lambda_o$$
$$b = \frac{\pi}{2} - \mu_o$$
$$c = \frac{\pi}{2} - \mu$$

where $\lambda$ is target geodetic longitude, $\mu$ is target geodetic latitude, $\lambda_o$ is launch site geodetic longitude, and $\mu_o$ is launch site geodetic latitude.

Using above, we can show the azimuth launch angle to be a function of geodetic locations and the $\cos a$ term as given by

$$\tan C = \frac{\cos \mu \cos \mu_o \sin\left(\lambda - \lambda_o\right)}{\sin \mu - \cos a \sin \mu_o}$$

The azimuth launch angles from Kilju-kun, North Korea, Xining, China and Bushehr, Iran to San Francisco (N37.76 W122) are calculated by using above. The results are tabulated in Table 1 in which the azimuth launch angles are defined from the North Pole eastward.

Table 1. Azimuth launch angles for launch attitude

| Launch Site | North Korea |
|---|---|
| Location (geodetic) | N41-E129 |
| Azimuth launch angle (degrees) | 40.37 |

The elevation angle for the ICBM is calculated using the Lambert guidance. Lambert guidance will put the ICBM on a collision triangle that is moving in a gravity field. We will solve the Lambert's problem using a numerical method. In this solution, we assume a flat earth and use topo-centric coordinates. The elevation angle of the ICBM is denoted by $\gamma$ and measured from the earth's surface to the tip of the missile. The central angular distance to be traveled is denoted by $\phi$ and measured from the earth's center between the target location and the launch location. The radius of the earth is denoted by $R_e$. Note that  gives the required velocity of the ICBM for a given distance. Since the launch point and target location are both on the ground,

$$r_o = a = R_e$$

is a valid statement. Using above, we can get the required velocity equation in closed form

$$V_{req} = \sqrt{\frac{Gm\left(1-\cos\phi\right)}{R_e \cos\left(\gamma\right)\left(\cos\gamma - \cos\left(\phi+\gamma\right)\right)}}$$

The time of flight for the ICBM can be calculated by using the formula for the elliptical travel as given by

$$t_F = \frac{R_e}{V_{req}\cos(\gamma)}\left\{\frac{\tan\gamma(1-\cos\phi)+(1-\lambda)\sin\phi}{(2-\lambda)\left[\frac{1-\cos\phi}{\lambda\cos^2\gamma}+\frac{\cos(\gamma+\phi)}{\cos\gamma}\right]}\right.$$
$$\left.+\frac{2\cos\gamma}{\lambda\left[(2/\lambda)-1\right]^{1.5}}\tan^{-1}\left(\frac{\sqrt{(2/\lambda)-1}}{\cos\gamma\cot(\phi/2)-\sin\gamma}\right)\right\}$$

where $\lambda$ is a constant and is given by

$$\lambda = \frac{V_{req}^2 R_e}{Gm}$$

The central angular distance $\phi$ can be calculated using the position vectors of the launch point and the target location:

$$\phi = \cos^{-1}\frac{\vec{r}_i \cdot \vec{r}_t}{\|\vec{r}_i\|\|\vec{r}_t\|}$$

where $\vec{r}_i$ and $\vec{r}_t$ are the launch point position vector and target location position vectors, respectively, in the ECEF coordinate system.

By substituting and solving for the elevation angle, we obtain the minimum and maximum possible elevation angles as follows:

$$\gamma_{\min} = \tan^{-1}\left(\frac{\sin\phi-\sqrt{2(1-\cos\phi)}}{(1-\cos\phi)}\right)$$
$$\gamma_{\max} = \tan^{-1}\left(\frac{\sin\phi+\sqrt{2(1-\cos\phi)}}{(1-\cos\phi)}\right)$$

We will use the method described in to find the elevation angle corresponding to the desired flight time, which is calculated by using above. The flight time is calculated iteratively by using elevation angles between the $\gamma_{\min}$ and $\gamma_{\max}$ in order to reach a value that is satisfactorily close to the desired flight time as follows

$$\gamma_{n+1} = \gamma_n + \frac{(\gamma_n - \gamma_{n-1})(t_{F_{des}} - t_{F_n})}{t_{F_n} - t_{F_{n-1}}}$$

where $n$ is the index of iteration. The elevation angle $\gamma$ is computed for North Korea, China and Iran are 54.22°, 55.98° and 58.92°, respectively.

Note that the Lambert Solution assumes an impulsive missile moving in free space. However, the ICBM model created is a three-stage solid-propellant missile, hence the actual elevation angles for a boosting ICBM moving on a rotating earth and in the atmosphere are different from the above values. The elevation angle for a boosting missile should be above 80° to overcome the gravity force and avoid hitting the ground. To find the accurate elevation angles, the three-dimensional motion simulation is run and the results are reported in the following section.

The stage total masses, the propellant masses and mass fractions of the ICBMs are given in Table 2.

| | | Stage 1 | Stage 2 | Stage 3 | Payload | Mass Fraction |
|---|---|---|---|---|---|---|
| North Korea | Total mass (kg) | 49000 | 27670 | 7711 | 2268 | 83% |
| | Propellant mass (kg) | 41640 | 23520 | 6554 | 0 | |
| | Propellant mass (kg) | 45640 | 25520 | 7554 | 0 | |
| | Propellant mass (kg) | 46640 | 26520 | 8554 | 0 | |

Table 2. Propellant mass and mass fractions of the ICBM

# III. EKV AND EKV CARRIER MODELLING

In this section, we will describe the configuration and specifications of the space-based exo-atmospheric kill vehicle (EKV) carriers and the EKV itself, and determine an initial launch condition from the orbit in which to place these EKV carriers in order to intercept an ICBM launched from the specified launch site. For the given launch location, we need a circular orbit with an altitude of 1000 km, an inclination angle of $43.5^{o}$ and a right-ascension angle of $15.3^{o}$, conditions which were derived by Aydin[2].

## A. INTERCEPTOR MISSILE MODELING

In this study, we will model an EKV that conducts a hit-to-kill intercept. Hit-to-kill interception is selected because the damage applied in space is significantly more than the damage applied by conventional explosive interceptors. The EKV must hit the payload section of the ICBM in order to assure the desired hard kill.

Raytheon has developed a ground-based EKV and tested it successfully. The model of the EKV considered in this study will be based on the specifications of the Raytheon EKV. We will use this model as a space-based EKV instead of a ground-based EKV. The Raytheon's EKV is shown in Figure 3[8].

The EKV has onboard sensor optics to track the target and a guidance unit, which improves the target data refresh rate and decreases the delay between the tracking and guidance application.

The EKV weighs 64 kg with a length of 139.7 cm and a diameter of 61 cm. We added a 136 kg booster to the EKV to give it the initial velocity when launched from the EKV carrier. The solid propellant in the booster is 100 kg, which makes the EKV's total mass 200 kg.

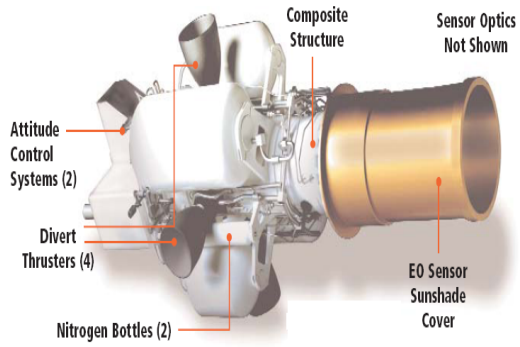


Figure 3. Raytheon's exo-atmospheric kill vehicle[8].

The EKVs are stored in a space-based EKV carrier, which is assumed to hold multiple EKVs. The EKV carriers travel on an orbit that provides enough kinetic energy to allow the EKVs to succeed in destroying the ICBM before it delivers the reentry vehicles (RVs).

The EKV is modeled using the same methodology that was introduced in Section II. The EKV boosts for ten seconds and then moves into the gravity field with the guidance command. The guidance command is applied in pitch and yaw axis.

The altitude of the orbit and the maximum range of the EKV together determine the down-look launch angle $\xi$ and the coverage angle $\alpha$ as shown in Figure 4[2]. Here we assume that the EKV cannot achieve a successful intercept after it passes over the desired intercept point due to its huge initial velocity in the direction of the orbit.

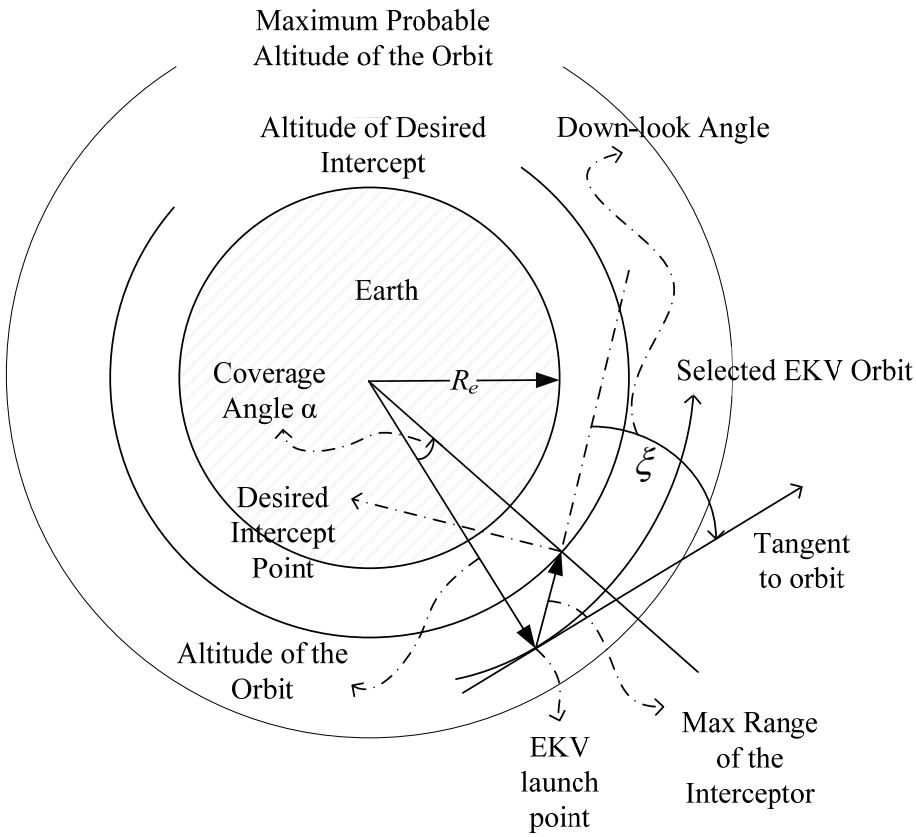


Figure 4. Orbital plane and the intercept geometry[2].

# IV. EKV GUIDANCE METHODS

This section will investigate different guidance laws for space-based interception of hostile ICBMs launched from some hostile location. The proportional navigation guidance (PNG), predictive guidance (PREDG) and bang-bang guidance (BBG) laws will be introduced and a three-dimensional implementation will be presented. The total commanded acceleration, intercept time, and miss distance generated by these guidance laws with the various error levels will be the major parameters considered to compare their performance.

## A. DESCRIPTION OF THE SCENARIO

The interceptor missile is a one-stage, boosted, exo-atmospheric kill vehicle (EKV) orbiting in a circular orbit with an inclination angle of $i = 43.52^o$, a right-ascension angle of $\Omega = 15.28^o$ and an altitude of $r_a$=1000 km. The target ICBMs are ground launched in the western Pacific and are targeting the city of San Francisco, California.

## B. COORDINATE SYSTEMS AND COORDINATE CONVERSIONS

In this section, three different coordinate systems will be introduced. First, the common coordinate system that will be used in the calculations will be the Earth-centered Earth-fixed (ECEF) coordinate system ($X_E$,$Y_E$,$Z_E$). The ECEF coordinate system is a three-dimensional orthogonal Cartesian coordinate system with the origin at earth's center. The x-axis passes through Greenwich (E0), the y-axis passes through E90 and the z-axis passes through the North Pole. The spherical earth rotates about the z-axis. We assume that the earth is a perfect sphere and the angular rotation of the earth will be involved in the computations. The second coordinate system is the Airframe Body Coordinates (ABC), which is a rotating system with the airframe of the vehicle ($X_M$, $Y_M$, $Z_M$ for EKV or $X_T$, $Y_T$, $Z_T$ for ICBM). The x-axis of this coordinate system lies within the velocity vector of the vehicle, assuming that the velocity vector and the missile body are

aligned. The y-axis is the left wing of this vehicle and the z-axis is orthogonal to the x and y-axes complying with the right hand rule. The third coordinate system is the line of sight coordinate system (LOS). This is a two-dimensional coordinate system, which can also be referred to as the LOS plane ($Y_L$, $Z_L$). The EKV position relative to the ICBM is defined by using this coordinate system. The distance $Y_L$ is the LOS vector projected on the equatorial plane and the distance $Z_L$ is the LOS vector projected on the z-axis of the ECEF coordinate system. The LOS plane and the ECEF coordinate system are illustrated in Figure 5.

The missile and target parameters, such as velocity and acceleration, are defined in the ABC coordinate system, and the computations are conducted in the common coordinate system (ECEF). Hence, we need to define and calculate the coordinate conversions to transform all the coordinates to the ECEF coordinate system.

The acceleration command will be applied to the yaw and pitch axes of the EKV, which are represented by $X_M$ and $Y_M$, respectively.

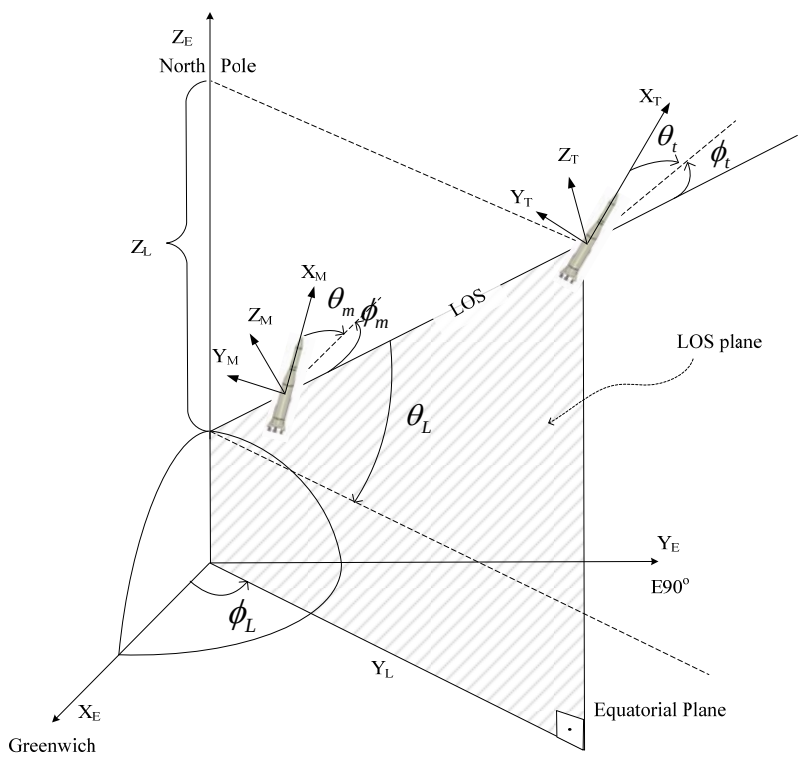


Figure 5. Coordinates geometry: ECEF coordinate system, LOS plane, ABC system.

## B. PROPORTIONAL NAVIGATION GUIDANCE

The Proportional Navigation Guidance (PNG) produces a perpendicular acceleration that is a function of the line of sight, closing velocity $V_c$ and the proportional navigation constant $N$. The block diagram of PNG is shown in Figure 6. The EKV seeker provides an accurate LOS angular velocity measurement, which will increase the performance of the intercept in our model. In the block diagram, *T(s)* is the transfer function of the guidance filter and it is assumed *T(s)*=1 in this report, the seeker noise is not considered. The missile dynamics in the block diagram is presented in Figure 12, where it is presented as the transfer function for time constant of 0.5s.

The PNG acceleration command perpendicular to the LOS vector is

$$n_{PNG} = NV_c\dot{\theta}_L \tag{4}$$

where

$N$ : Navigation constant
$V_c$ : Closing velocity
$\dot{\theta}_L$ : Line-of-sight rate

Note that the acceleration command derived above is perpendicular to the LOS vector. However, we can only apply command forces perpendicular to the missile body. The component of this command perpendicular to the missile body is derived assuming that the missile velocity vector is aligned with the missile body as

$$n_{PNG} = \frac{NV_c\dot{\theta}_L}{\cos\theta_m} \tag{5}$$

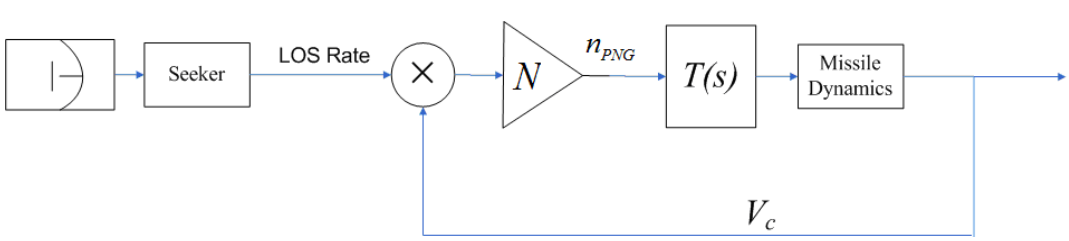


Figure 6. Block diagram of PNG.

## C. BANG-BANG GUIDANCE

Bang-bang guidance (BBG) is a derivative of proportional guidance. Bang-bang guidance applies the maximum possible acceleration in the direction of the LOS angular velocity. The missiles with thrusters as the control elements apply this guidance very effectively. The guidance command is defined as a function of the LOS angle rate and the closing velocity as

$$n_{bb} = a_m \operatorname{sgn}(V_c \dot{\theta}_L) \tag{6}$$

where $a_m$ is the maximum applicable lateral acceleration of the missile.

Defining the bang-bang acceleration command using the existing derivation for the PNG will make this guidance easier to implement into the model that we developed. The direction of the guidance command perpendicular to the missile body is derived with the same method we used in PNG. The unit vector, which defines the direction of the bang-bang acceleration command, is the same unit vector of the PNG guidance command and is given by

$$\hat{n}_{bb} = \frac{n_{PNG}}{\left\| n_{PNG} \right\|} \tag{7}$$

## D. PREDICTIVE GUIDANCE

Proportional navigation guidance requires only the line-of-sight rate and closing velocity of the target with respect to the interceptor. If complete kinematic information is available for the target ICBM, it can be exploited to improve overall system performance. Predictive guidance is an algorithm that seeks to improve performance by exploiting this additional information. The principle behind predictive guidance is quite simple. The block diagram of the predictive guidance is shown in Figure 7. We can define the zero effort miss to be the distance the missile would miss the target if the target continued along

its present course and the missile made no further corrective maneuvers[6]. Zarchan [1][3] has developed equations for computing the zero effort miss in ECEF coordinates as

$$ZEM_y = R_{TMy} + V_{TMy} * t_{go}$$
$$ZEM_z = R_{TMz} + V_{TMz} * t_{go} \tag{8}$$

*where*

$ZEM_y$ : Zero-effort-miss (azimuth, km)

$ZEM_z$ : Zero-effort-miss (elevation, km)

$R_{TMy}, R_{TMz}$ : missile to target relative position (km)

$V_{TMy}, V_{TMz}$ : missile to target relative velocity (km/sec)

$t_{go}$ : Time to go (sec)

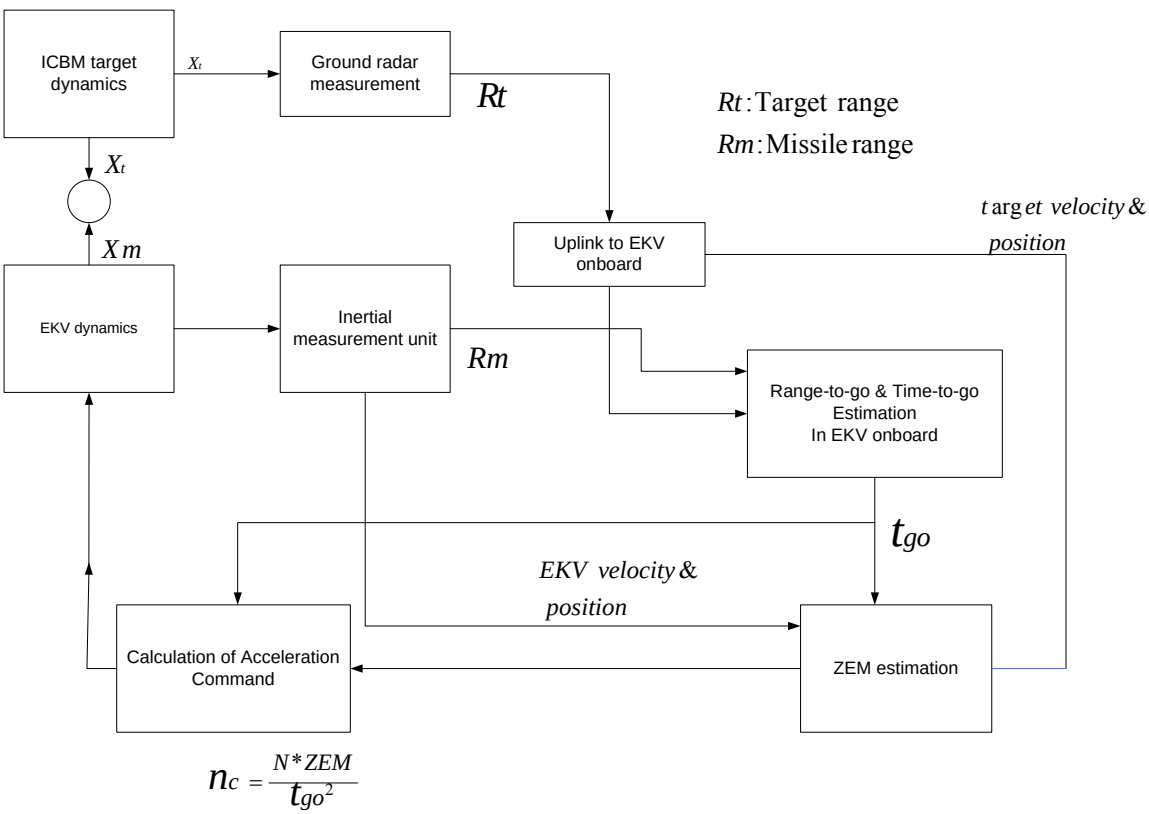


Figure 7. Block diagram of predictive guidance using target and missile information

We can find the component of the zero effort miss in the line of sight coordinates and then transform it into missile body coordinate.

The other approach of calculating zero effort miss distance was tried using LOS rate from the seeker suggested by Hari B. Hablani[4][9][10] and the block diagram is shown in Figure 8. The zero effort miss distances are expressed as

$$ZEM_y = V_c t_{go}^2 \dot{\psi}_L$$
$$ZEM_z = V_c t_{go}^2 \dot{\theta}_L \tag{9}$$

where

$\dot{\psi}_L$ : LOS rate(azimuth)

$\dot{\theta}_L$ : LOS rate(elevation)

The acceleration guidance command should be proportional to the zero effort miss and inversely proportional to the square of time to go until intercept as

$$n_{cy} = \frac{N \bullet ZEMy}{t_{go}^2} \tag{10}$$

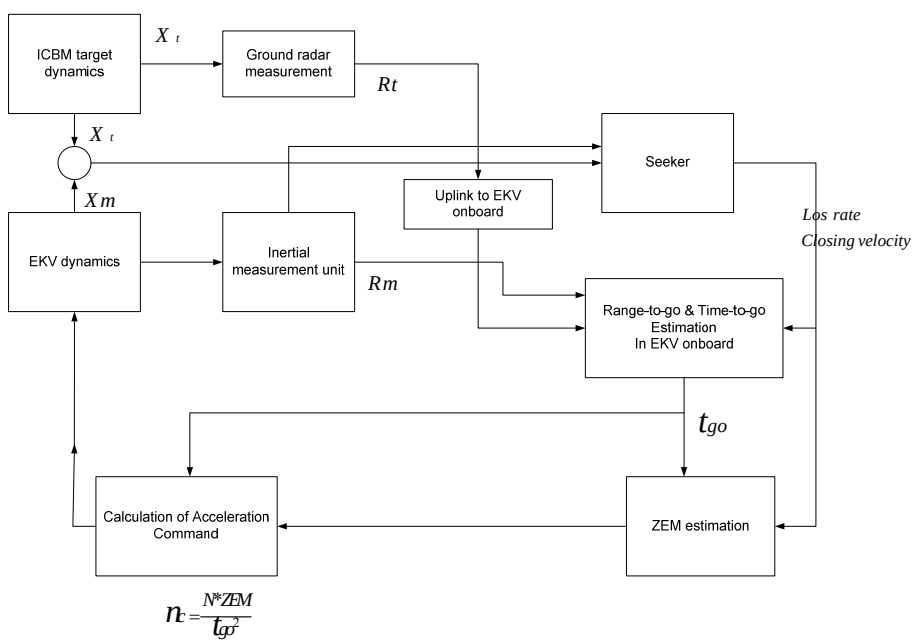


Figure 8. Block diagram of predictive guidance with seeker LOS rate

# V. SIMULINK SIMULATION MODEL DESCRIPTION

The ICBM dynamics modeled in Chapter II, the EKV dynamics and orbit parameters modeled in Chapter III and the three guidance rules developed in Chapter IV are implemented in a SIMULINK® model.

## 1. Simulation Initialization

The SIMULINK® model requires initial parameters of the EKV and the ICBM to run the simulation. These parameters are entered by the user by running *SimulationInit.m* MATLAB® file separately. The initial parameters include the EKV launch point on the orbit, the ICBM launch site and the launch delay.

The initial state vector is generated in the code for the initial point of the EKV on the orbit at launch. The user is asked to enter the mean anomaly time, which starts when the EKV passes by the equator from south to north, i.e., time zero for the EKV position starts at the equator. The entered time is used to calculate the position of the EKV on the orbit. The state vector of the EKV is then calculated and passed to the SIMULINK® model.

The launch location of the ICBM and the EKV launch delay are also selected by the user. The three choices of launch locations are North Korea, China or Iran. The launch location and the initial launch parameters for a San Francisco attack of the selected ICBM are predetermined. With the parameters above, the initial state vector of the ICBM is calculated and passed to the SIMULINK® model. The propellant masses of the selected ICBM are also predetermined. The MATLAB® functions that are used in this model are listed in Table 3.

Table 3. Code listing for the SIMULINK® model.

| File Name | SIMULINK® Block | Comments |
|---|---|---|
| SimulationInit.m | N/A | Should be run before simulation |
| ICBMmotion.m | ICBM Dynamics | Calculates change in ICBM state |
| Seeker.m | Seeker | Tracks target for LOS rate and $V_c$ |
| HitDet.m | Seeker | Detects hit or miss and stops simulation |
| PREDG.m | Guidance | Calculates Predictive guidance acceleration command |
| PNGjsk.m | Guidance | Calculates PNG acceleration command and Bang-bang guidance command |
| Limiter.m | Guidance | Limits the acceleration command |
| Mag.m | Guidance | Calculates the magnitude of a given vector |
| EKVmotion.m | EKV Dynamics | Calculates change in EKV state |
| PlotSimResults.m | N/A | Plots the results that are stored in workspace |

### 2. SIMULINK® Model Description

The model incorporates ICBM dynamics, seeker, guidance unit and EKV dynamics in four different subsystems. The overall model is shown in Figure 9. The flow diagram for the model is provided in Appendix A.

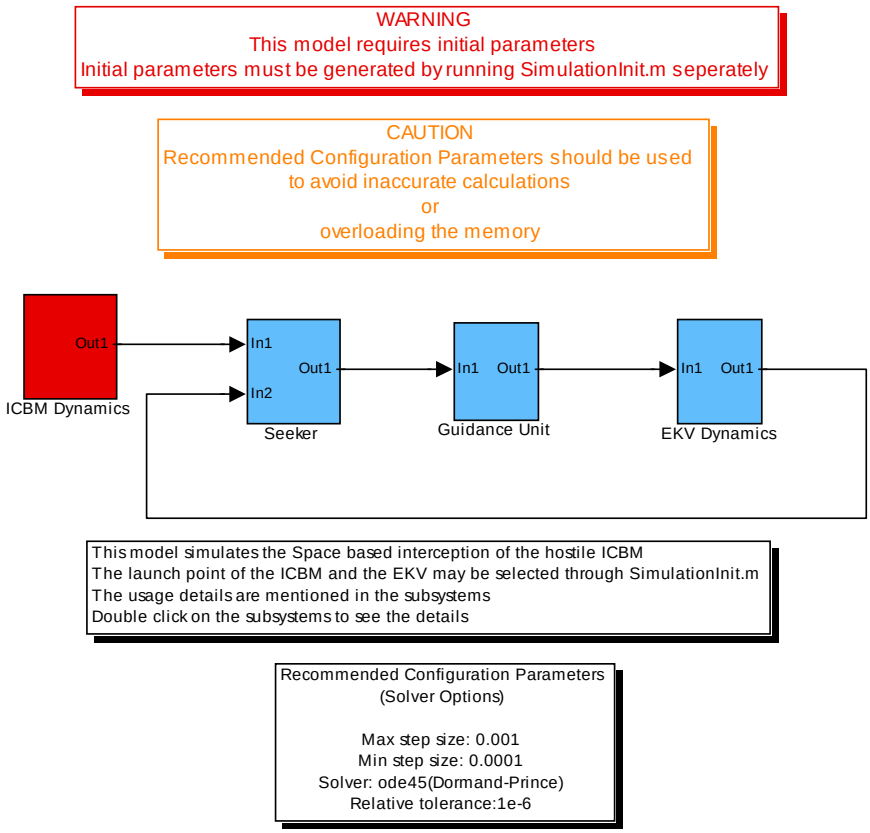


Figure 9. Overall space-based intercept SIMULINK® model[2].

This model is capable of running for PG, PNG or HG one at a time. Adding new guidance methods is also possible with a new MATLAB® script file for new guidance methods. The model gives three options as the ICBM launch point. The subsystems of the model are ICBM Dynamics, Seeker, Guidance Unit and the EKV Dynamics.

### 3. ICBM Dynamics Subsystem

The ICBM dynamics subsystem reads the required initial parameters from the lookup tables. The tables read these parameters from the workspace resulting from S*imulationInit.m* file. Initial parameters include the selected launch site, the ICBM initial propellant mass and the ICBM initial state vector.

The subsystem for ICBM dynamics is shown in Figure 10. The *ICBMmotion.m* file calculates the time derivative of the state vector and the propellant mass, and the integrators within the model integrates these vectors and returns the results back for the next iteration.

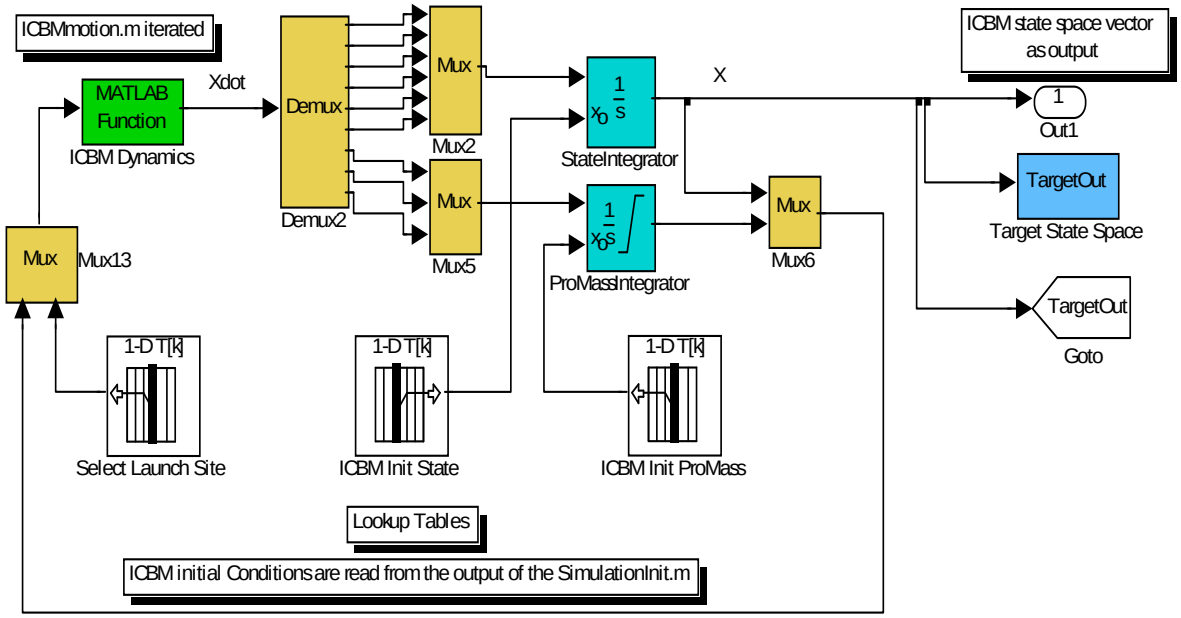


Figure 10. SIMULINK® model for ICBM Dynamics[2].

### 4. Seeker Subsystem

The seeker provides the guidance unit with ICBM parameters, such as LOS angle, LOS angle rate, off bore sight angles, range and closing velocity. The miss distance is also measured in this unit, and the simulation is terminated upon a hit or miss. The model is shown in Figure 11.

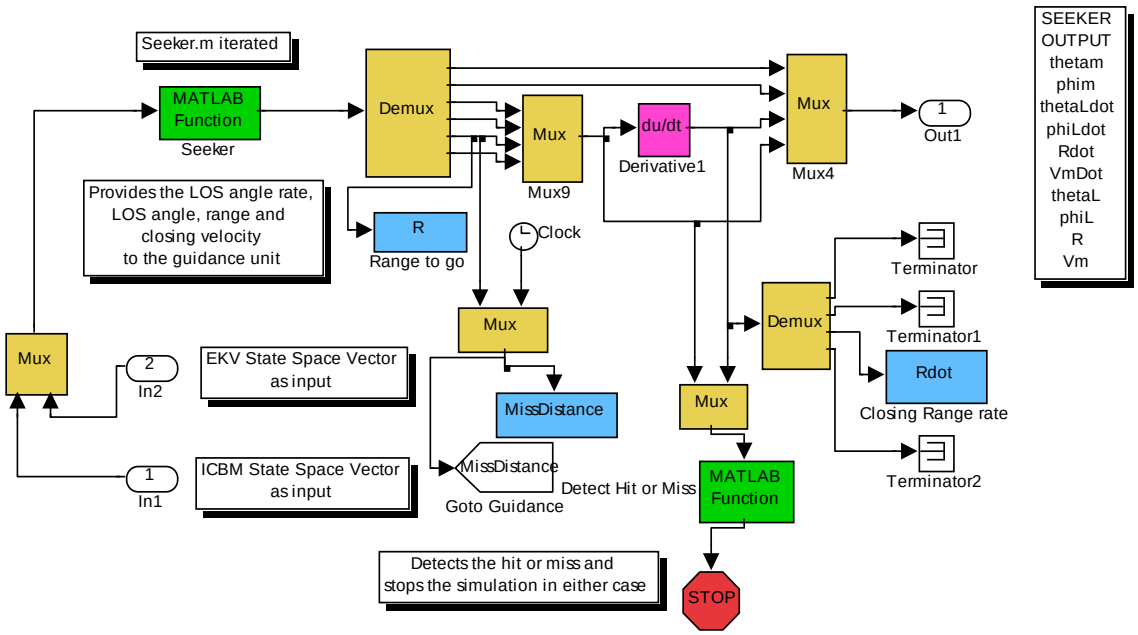


Figure 11. SIMULINK® model for Seeker design of the EKV[2].

## 5. Guidance Subsystem

The guidance subsystem of the model takes the seeker outputs as the input and uses them to generate the guidance acceleration command. The generated guidance command is filtered by a limiter for maximum acceleration capability of the EKV, and the total system delay is applied by the autopilot $T(s)$. The guidance subsystem model is shown in Figure 12. The EKV parameters of interest are also stored in the workspace variables in this subsystem.

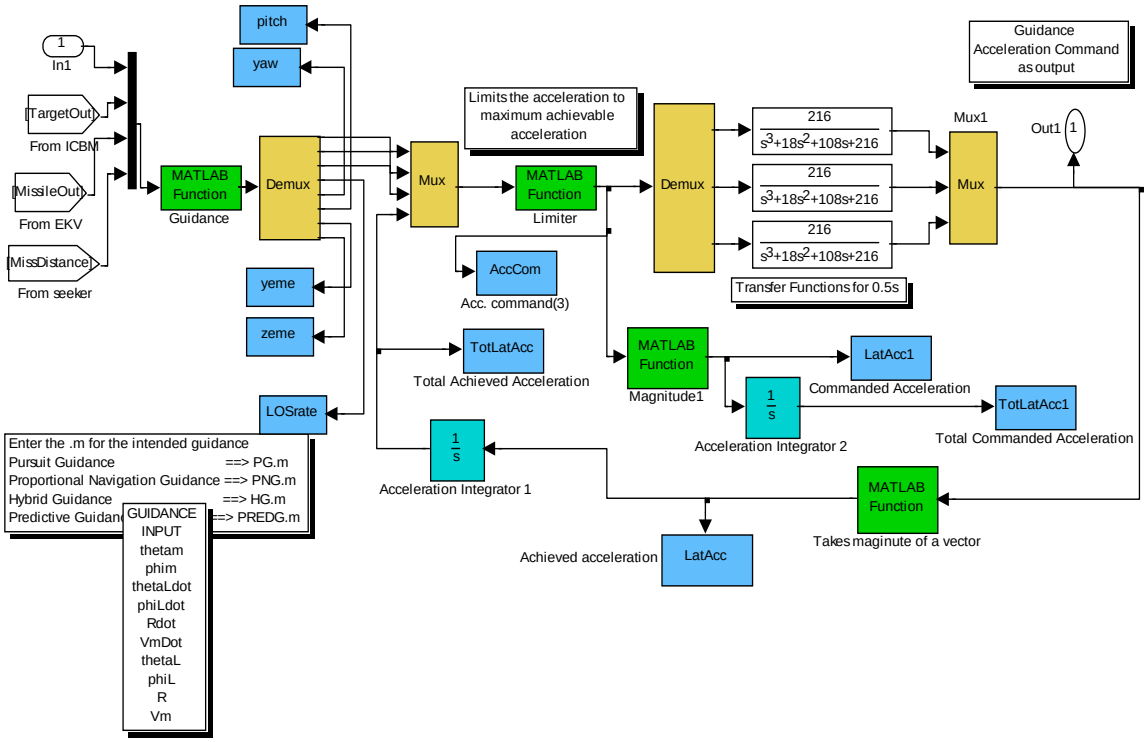


Figure 12. SIMULINK® model for Guidance Unit of the EKV[2].

## 6. EKV Dynamics Subsystem

EKV Dynamics uses the same method as in ICBM Dynamics. The initial parameters are read from the workspace by the lookup tables. These initial parameters include the initial propellant mass and the initial EKV state vector. The subsystem takes the guidance command input from the guidance unit and applies it to EKV Dynamics. The EKV dynamics subsystem moves and steers the EKV towards the ICBM during its flight and returns an EKV state vector as the output. This output is also carried to the seeker subsystem by a feedback loop in order to model the INS/GPS unit of the EKV.

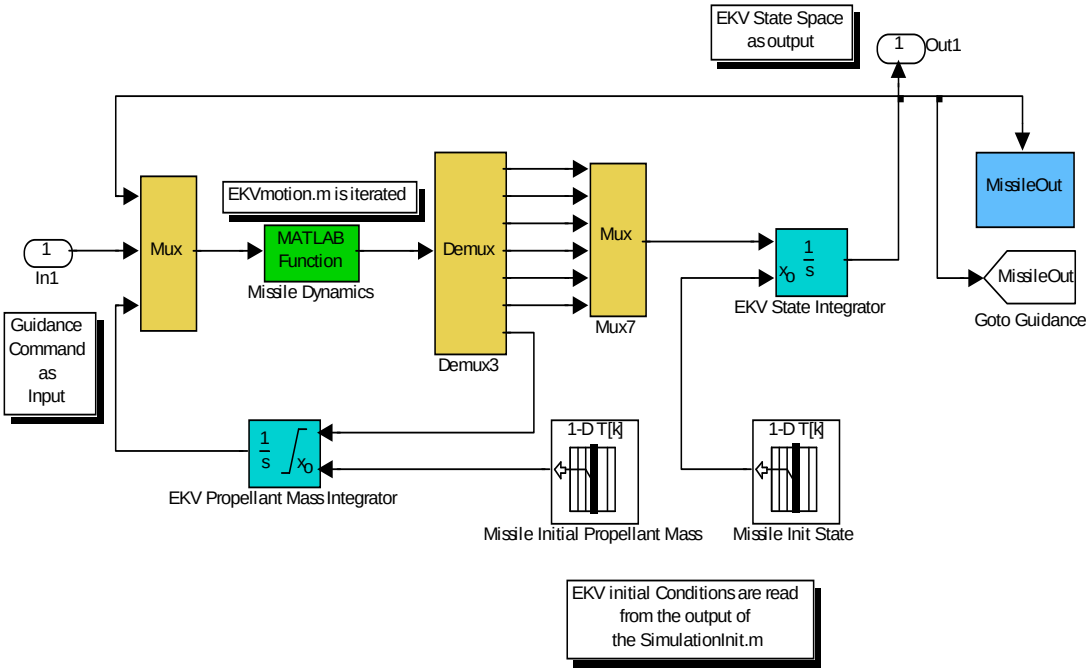


Figure 13. SIMULINK® model for EKV Dynamics[2].

The flow chart of the SIMULINK® model and the MATLAB® functions are provided in Appendix A.

# VI. COMPARISON OF GUIDANCE LAWS

In this section, a three-dimensional SIMULINK® model is developed and the simulation is tested for the different guidance laws. It summarizes the miss distance, total control effort and intercept time. The acceleration limiter is set to $300\ \mathrm{m/s^2}$ to prevent applying forces that the EKV cannot hold.

## A. SIMULATION RESULTS FOR PROPORTIONAL NAVIGATION GUIDANCE

The navigation constant $N$ is selected as five based upon the trade-off simulation for the given target and missile velocity and target acceleration[11][12][13]. The trade-off simulation considers the miss distance, guidance command profile and intercept condition. The acceleration limiter is set to $300\ \mathrm{m/s^2}$ to prevent applying forces that the EKV cannot withstand. The velocity vector of the EKV at the beginning of the interception is not towards the ICBM, which results in an unfavorable closing velocity. The miss distance, total control effort and intercept time are shown in Table 4.

| PNG | Miss distance (m) | Total control effort(m/sec$^2$) | Intercept time(minute) |
|---|---|---|---|
| | 0.06 | 20,600 | 2.8 |

Table 4. Performance index of PNG.

The command acceleration and trajectory profile are shown in Figure 14.

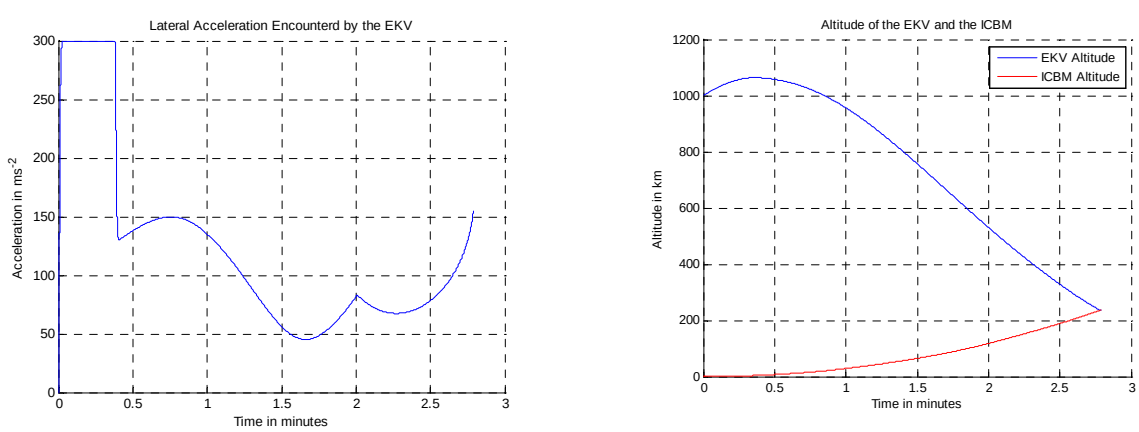


Figure 14. Guidance command and trajectory of PNG.

B. SIMULATION RESULTS OF THE PREDICTIVE GUIDANCE

1. Predictive guidance with zero-effort-miss using LOS rate of the seeker

It has almost the same performance as the proportional navigation guidance. The summary of the performance are shown in Table 5.

| Predictive guidance using LOS rate of seeker | Miss distance (m) | Total control effort ($m/sec^2$) | Intercept time(minute) |
|---|---|---|---|
| | 0.05 | 20,500 | 2.75 |

Table 5. Performance index of predictive guidance using seeker LOS rate.

In the predictive guidance using time-to-go information, we need to investigate the sensitivity of the time-to-go error. Time-to-go information has a great effect on the performance of predictive guidance[14]. The miss distances with respect to the time-to-go error are shown in Table 6.

| Time-to-go error(sec) | Miss distance(meter) |
|---|---|
| 0 | 0.05 |
| 1 | 0.25 |
| 5 | 0.4 |
| 6 | 1.0 |
| 7 | 1.5 |
| 8 | 2.1 |
| 9 | 2.5 |
| 10 | 10.0 |

Table 6. Miss distance w.r.t time-to-go error in predictive guidance using seeker LOS rate.

The command acceleration and trajectory profile are shown in Figure 15.

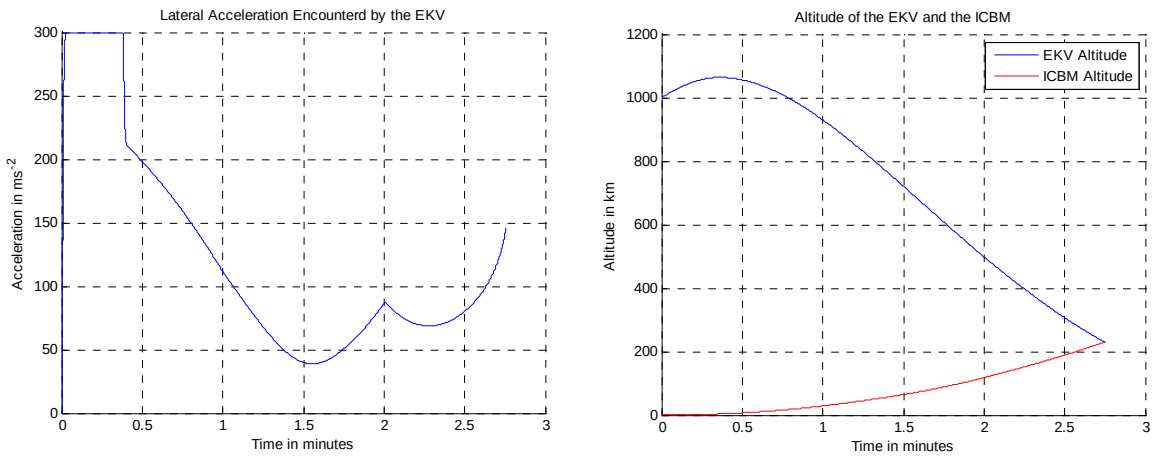


Figure 15. Guidance command and trajectory of predictive guidance using seeker LOS rate.

2. Predictive guidance with zero-effort-miss prediction using target and missile velocity and range

Predictive guidance has a very small miss distance because it has perfect information on the target and interceptor. The total control effort is slightly higher than that obtained for proportional navigation guidance. The advantage is the reduced intercept time compared with proportional navigation guidance. The summary of performance is shown in Table 7.

| Predictive guidance using zero effort miss prediction | Miss distance (m) | Total control effort(m/sec$^2$) | Intercept time(minute) |
|---|---|---|---|
| | 0.01 | 21,900 | 2.5 |

Table 7. Performance index of predictive guidance using zero effort miss prediction.

Performance of predictive guidance using time-to-go information is critically related to the time-to-go error. The miss distance with respect to the time-to-go error is

shown in Table 8. It would not be implementable in the presence of time-to-go error, even though it has very accurate guidance and reduced intercept time.

| Time-to-go error(sec) | Miss distance(meter) |
|---|---|
| 0 | 0.01 |
| 1 | 17 |
| 2 | 47 |
| 3 | 89 |
| 4 | 144 |
| 5 | 200 |

Table 8. Miss distance w.r.t. time-to-go error in predictive guidance using zero effort miss prediction.

The command acceleration and trajectory profile are shown in Figure 16.

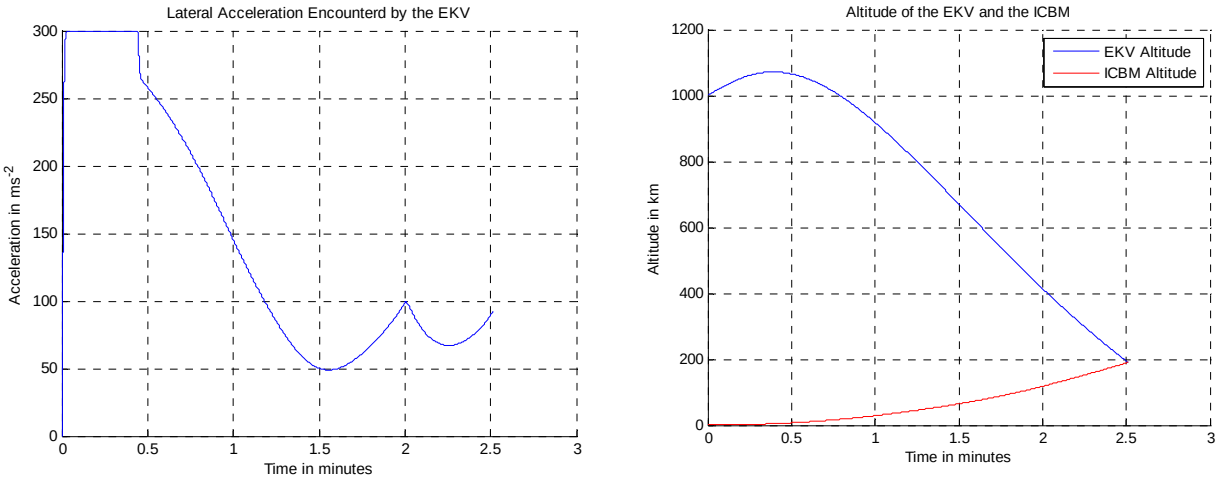


Figure 16. Guidance command and trajectory of predictive guidance with ZEM prediction.

## C. COMPARISON SUMMARY OF SIMULATION RESULTS

Overall summary of the performance indices are shown in Table 9.

| | PNG | Predictive (1) | Predictive (2) | Bang-Bang |
|---|---|---|---|---|
| Miss Distance (m) | 0.06 | 0.05 | 0.01 | 24 |
| Intercept Time (min) | 2.8 | 2.75 | 2.5 | 2.55 |
| Total control effort ( $m/s^2$ ) | 20,600 | 20,500 | 21,900 | 35,000 |

Table 9. Overall summary of the performance indices.

- Predictive(1) : Predictive guidance with zero-effort-miss using LOS rate of the seeker
- Predictive(2) : Predictive guidance with zero-effort-miss prediction using target and missile velocity and range

The trajectory of the target/EKV and total control effort are shown in the same plot in Figure 17 with for all of the guidance laws.

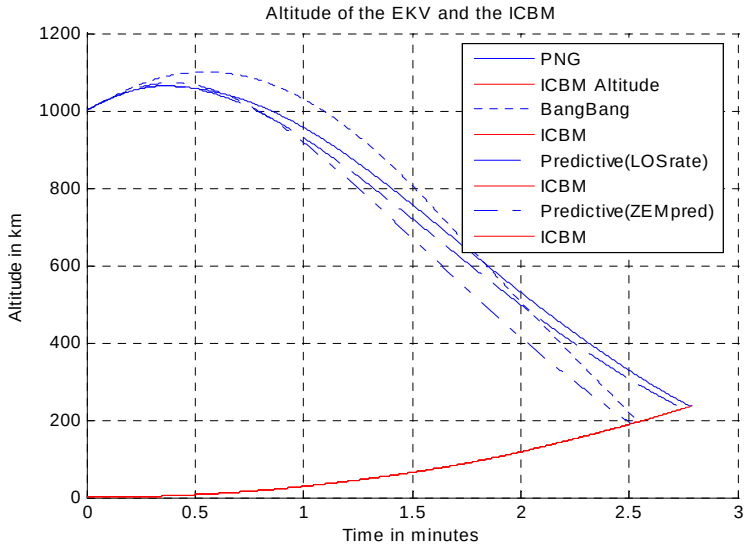


(a)

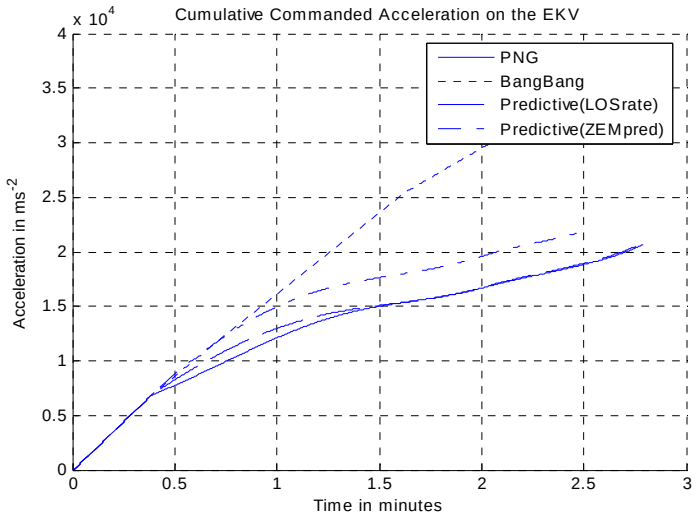


(b)

Figure 17. Comparison of trajectories(a) and total control efforts(b).

## D. LAUNCH ENVELOPE

The launch envelope is defined as the window between the minimum and maximum times that a successful EKV launch can be made and still intercept the target ICBM during boost phase[15]. The times are reported as a window in seconds, with zero being taken as the time of the northerly crossing of the equator by the space-based EKV carrier. The allowable launch envelope depends on the guidance law. In these simulations, predictive guidance demonstrated shorter intercept times on average, giving a larger launch envelope, than did proportional navigation guidance. The criterion used to compute the launch envelope was the flight time from launch to intercept when the intercept could occur within the 3.5 minute boost phase of the ICBM trajectory. Table 10 shows the launch envelope for proportional navigation guidance and predictive guidance using zero effort miss prediction and no error in time-to-go estimation.

| Allowable launch zone (time elapsed after space EKV carrier ascending start at equator) | PNG | PREDG(2) |
|---|---|---|
| | 1749 ~ 2007 seconds | 1685 ~ 2040 seconds |

Table 10. Allowable launch zone of PNG and PREDICTIVE(2).

Predictive guidance with zero effort miss prediction (and zero time-to-go error) has a launch envelope that is about 38% larger than the proportional navigation launch envelope, providing broader coverage by fewer space-based EKV carrier platforms.

# VII. GUIDANCE COMMAND GENERATION BY BURN TIME CONTROL OF DIVERT THRUSTER

In previous sections, the guidance command was generated by the acceleration command loop. In EKV guidance, it actually uses the divert thruster to make a guidance loop of divert pulse generation with maximum thrust. It would calculate the velocity increment to be gained in predictive guidance and proportional navigation guidance. The block diagram of this guidance loop is shown in Figure 18.

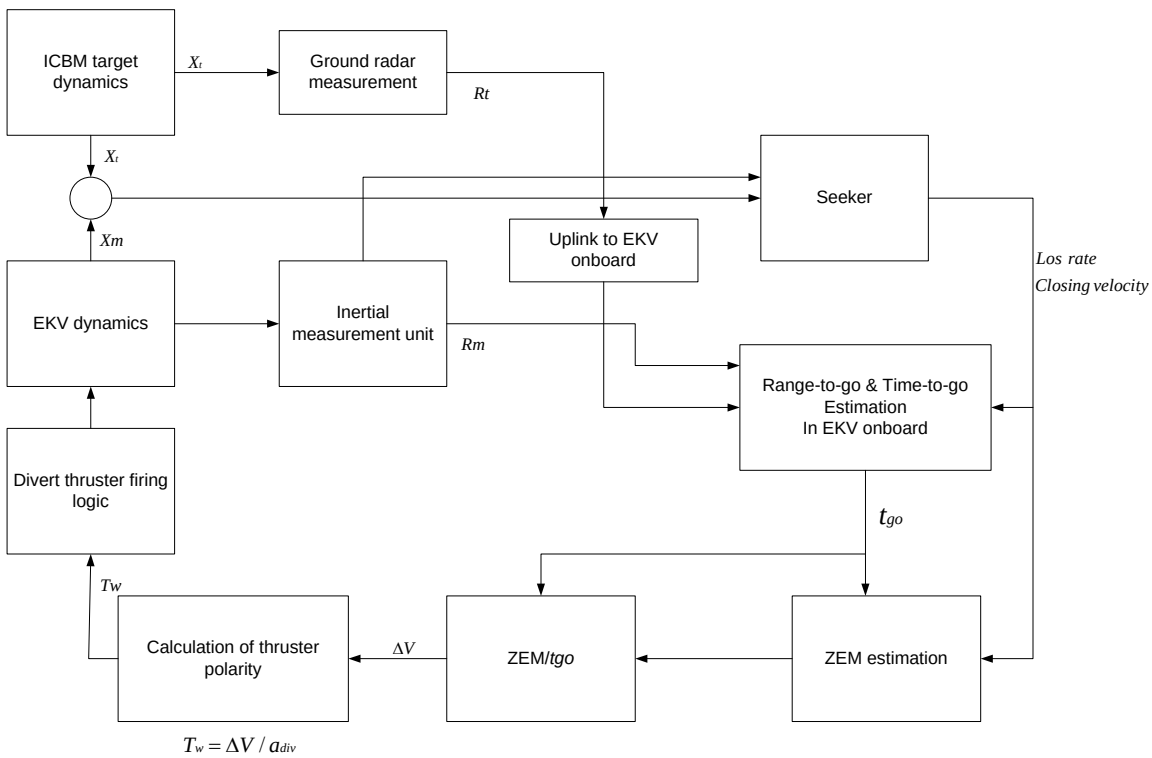


Figure 18. Block diagram of EKV guidance using burn time control[4].

$$\Delta V = ZEM / t_{go}$$

$$\tau_{\omega} = \Delta V / a_{div}$$

where

$\tau_{\omega}$ : divert pulse width

$a_{div}$ : divert acceleration

Boeing company has tried to use EKV guidance with predictive guidance using divert thruster and seeker line-of-sight rate. We can also consider the effect of information delay related to the pulsed guidance command in predictive guidance and proportional navigation guidance.

In this report, we tried this approach in the EKV guidance. However, the results show unsatisfactory miss distance and needs more investigation. It will help to add an autopilot algorithm in the controller. It would be recommended to work further.

The simulation results are shown in Figure 19 - 21. The miss distance is forty eight meters using the maximum acceleration limit of thirty g's. The total control effort is 32,000 $m/s^2$ .

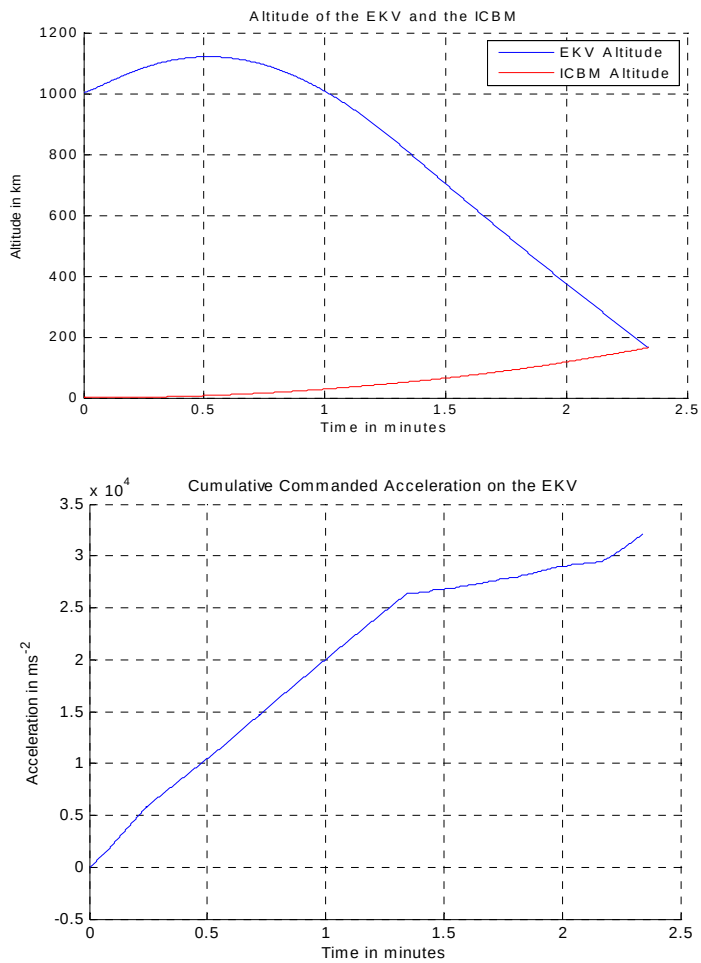


Figure 19. Trajectories and total control efforts with burn time control

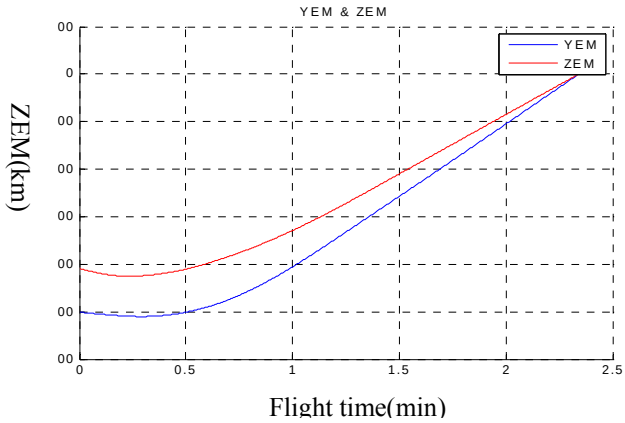


Figure 20. Zero-effort-miss profile with burn time control

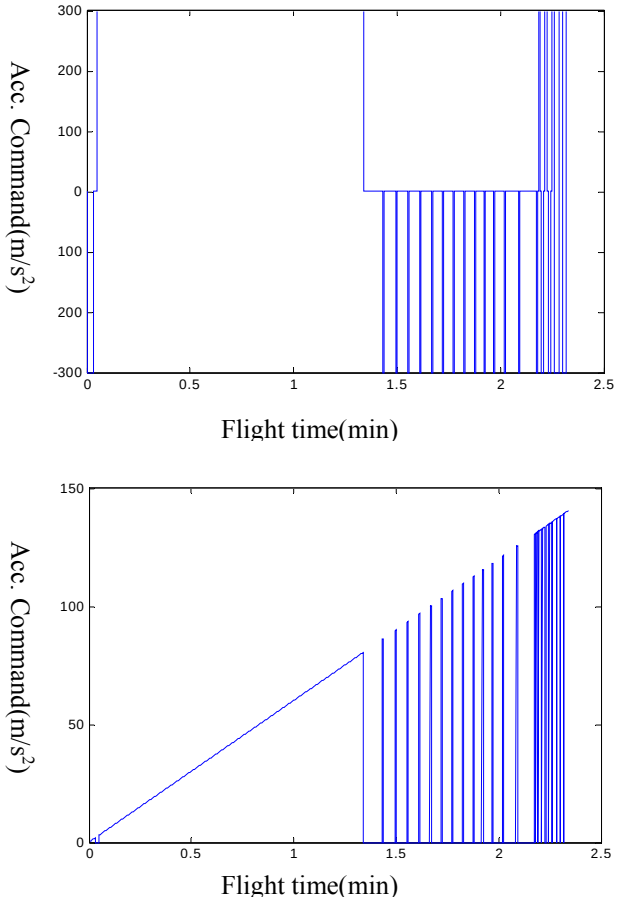


Figure 21. Pulse width of burn time with burn time control (upper:pitch, lower:yaw).

# VIII. SUMMARY

This paper has explored the use of alternative guidance laws for EKV intercept of a hostile ICBM during boost phase. Proportional navigation guidance (PNG), bang-bang control guidance (BBG), and two forms of predictive guidance (PREDG) have been studied using computer simulation. The two forms of predictive guidance are the predictive guidance using seeker LOS rate (PREDG1) and the predictive guidance using zero effort miss with target and interceptor information (PREDG2). Simulation results have included missile and EKV trajectories, miss distance, total control effort, and intercept flight time.

Trajectory modeling included gravity, the effects of the earth's rotation, and atmospheric drag, as well as thrust acting on the ICBM and the EKV vehicles. Since the trajectory of the ICBM takes it into space, the earth‘s rotation plays a significant role on its impact point. All guidance laws were studied using a three dimensional intercept model. The ICBM trajectory data was generated using MATLAB and SIMULINK to generate the missile dynamics and flight trajectory.

The guidance law that minimized the miss distance was predictive guidance with zero effort miss prediction using perfect target and missile information. PNG and PREDG1 had similar total control effort statistics, but BBG was higher. Interceptor flight times were lower for BBG and PREDG2 than for PNG, giving larger launch envelopes. However, when errors in time-to-go estimation were implemented in PREDG2, significant miss distances resulted from guidance law, which would be devastating for a hit-to-kill interceptor.

# IX. RECOMMENDED FUTURE WORK

For future work an investigation into the reason why the miss distance is large in the guidance using divert burn time control should be carried out. It will be necessary to add some control logic or to modify the Simulink program.

Additionally, the system has inherent delays such as the guidance and control processor and sensors. It would have some performance degradation with these delays. It needs to study these effects and design a filter to compensate it. It also needs to consider the sensor measurement noises of the seeker and inertial measurement of the EKV, on-board processing delays and divert thruster uncertainties.

# APPENDIX A. CODE FLOW CHART

This appendix contains the flow chart of the MATLAB® code for the ICBM trajectory prediction and the SIMULINK® model for ICBM intercept with different EKV guidance algorithms.

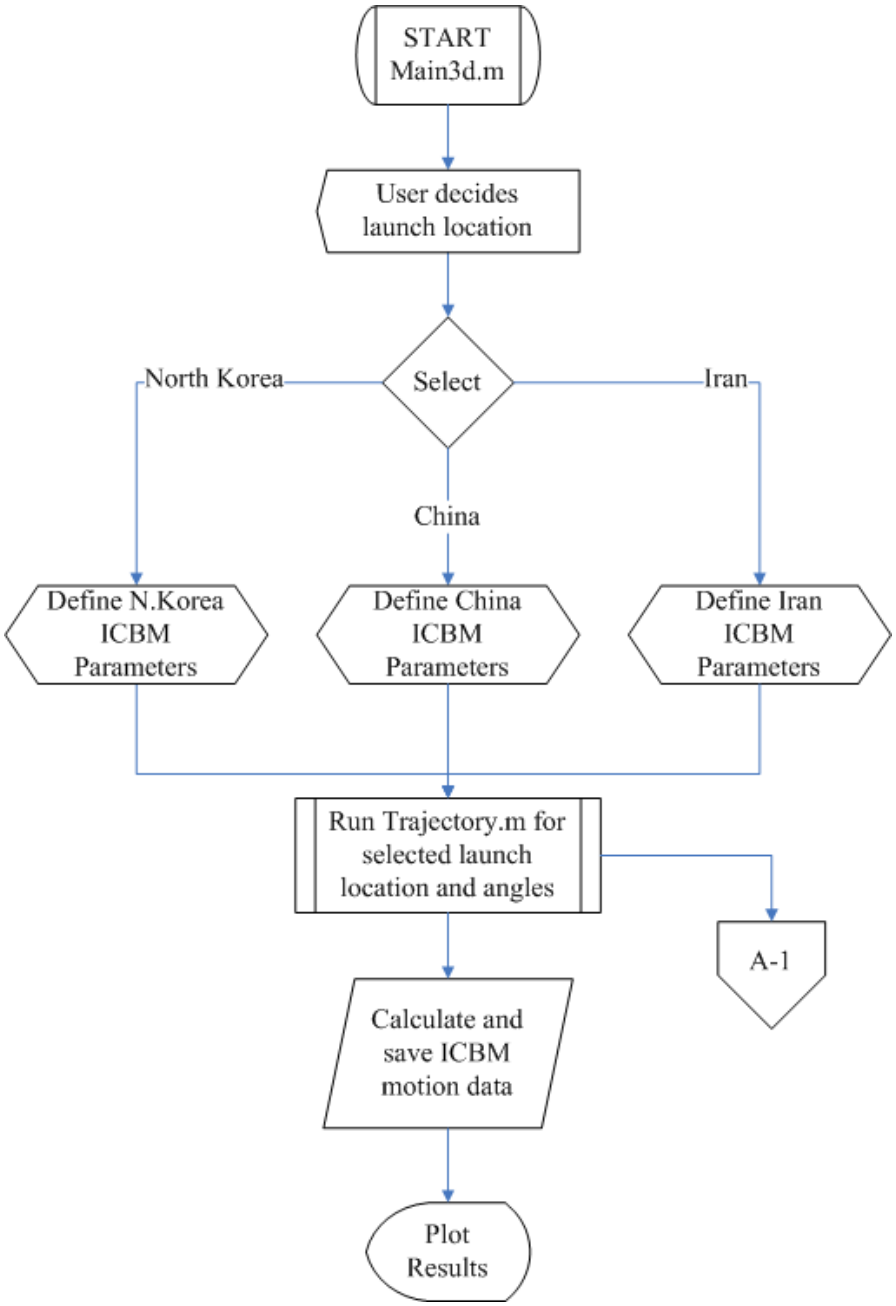
START
Main3d.m
User decides
launch location
Select
North Korea
China
Iran
Define N.Korea
ICBM
Parameters
Define China
ICBM
Parameters
Define Iran
ICBM
Parameters
Run Trajectory.m for
selected launch
location and angles
A-1
Calculate and
save ICBM
motion data
Plot
Results

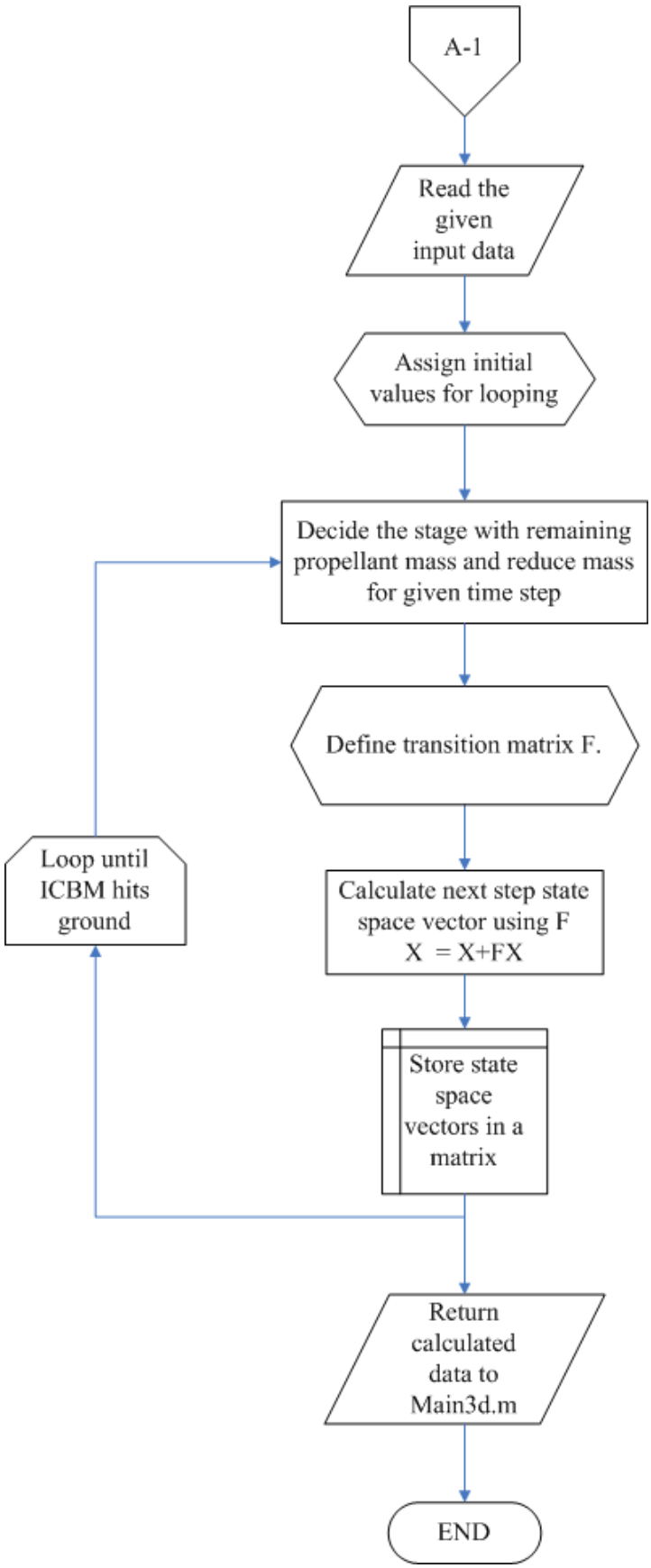
A-1
Read the given input data
Assign initial values for looping
Decide the stage with remaining propellant mass and reduce mass for given time step
Define transition matrix F.
Calculate next step state space vector using F
X = X+FX
Store state space vectors in a matrix
Loop until ICBM hits ground
Return calculated data to Main3d.m
END

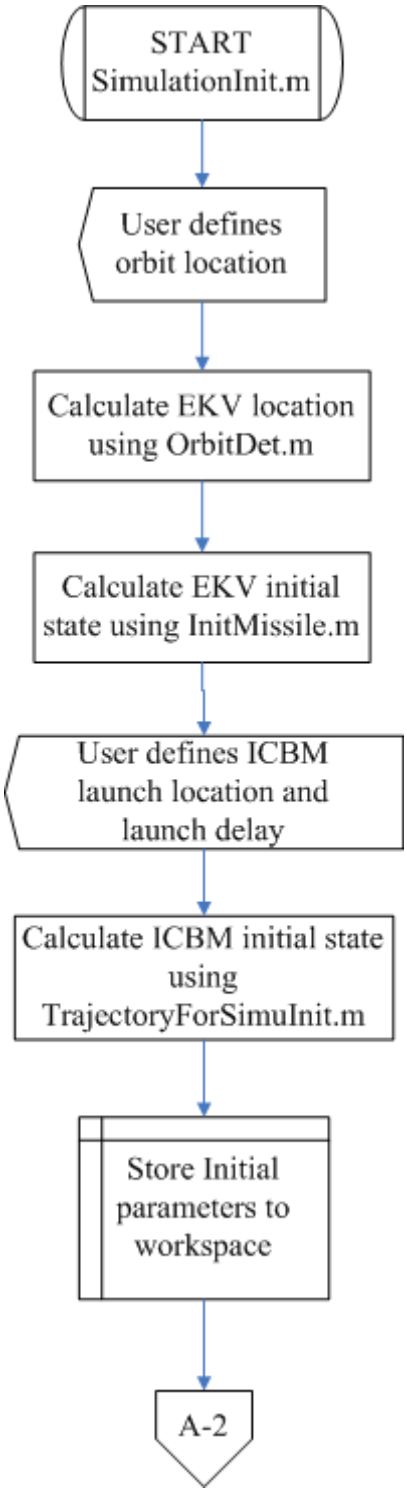
START
SimulationInit.m
User defines orbit location
Calculate EKV location using OrbitDet.m
Calculate EKV initial state using InitMissile.m
User defines ICBM launch location and launch delay
Calculate ICBM initial state using TrajectoryForSimuInit.m
Store Initial parameters to workspace
A-2

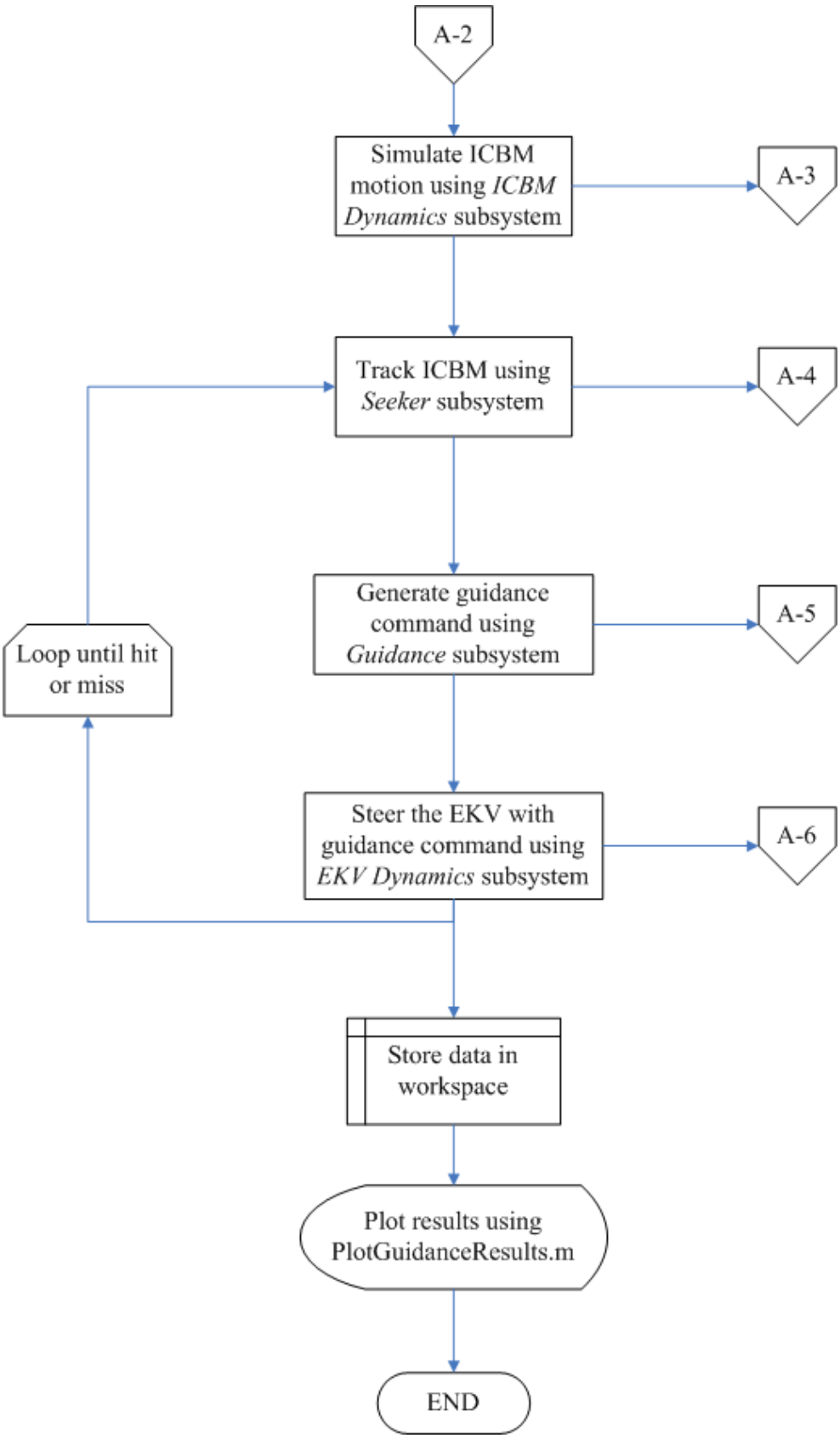
A-2
Simulate ICBM motion using *ICBM Dynamics* subsystem
A-3
Track ICBM using *Seeker* subsystem
A-4
Generate guidance command using *Guidance* subsystem
A-5
Loop until hit or miss
Steer the EKV with guidance command using *EKV Dynamics* subsystem
A-6
Store data in workspace
Plot results using PlotGuidanceResults.m
END

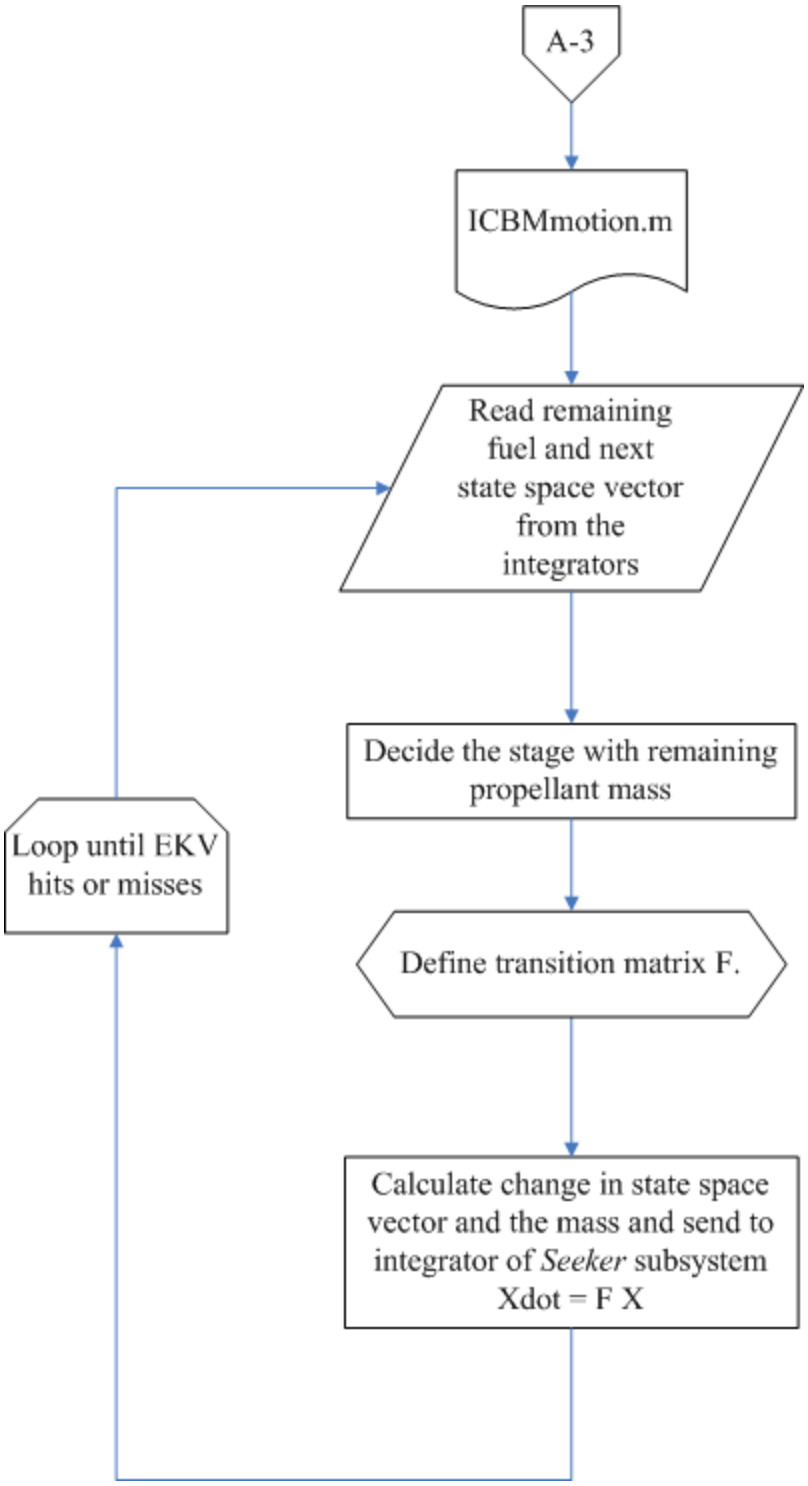
A-3
ICBMmotion.m
Read remaining fuel and next state space vector from the integrators
Decide the stage with remaining propellant mass
Define transition matrix F.
Calculate change in state space vector and the mass and send to integrator of *Seeker* subsystem Xdot = F X
Loop until EKV hits or misses

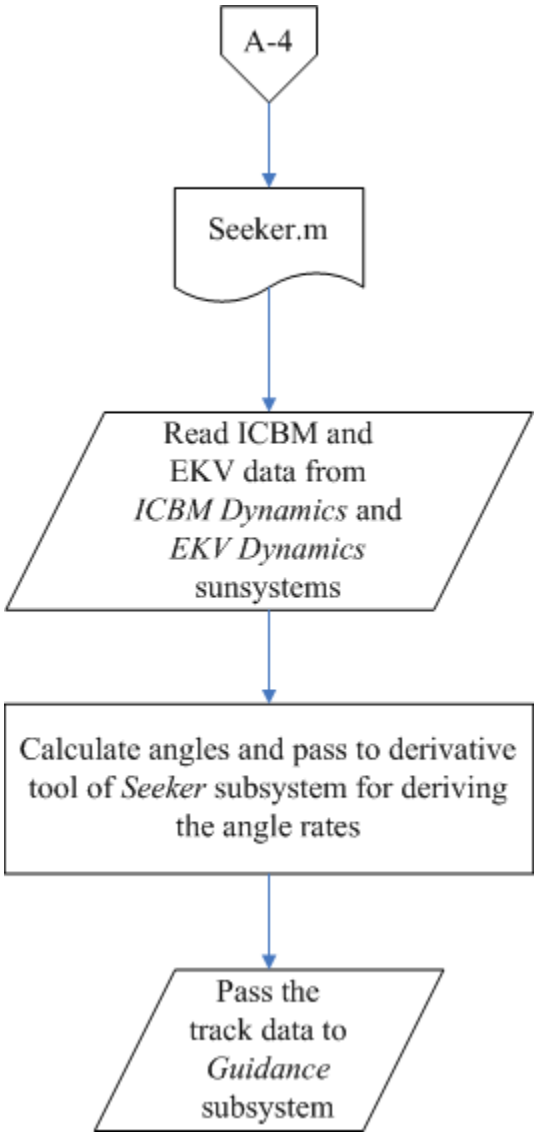
A-4
Seeker.m
Read ICBM and EKV data from *ICBM Dynamics* and *EKV Dynamics* sunsystems
Calculate angles and pass to derivative tool of *Seeker* subsystem for deriving the angle rates
Pass the track data to *Guidance* subsystem

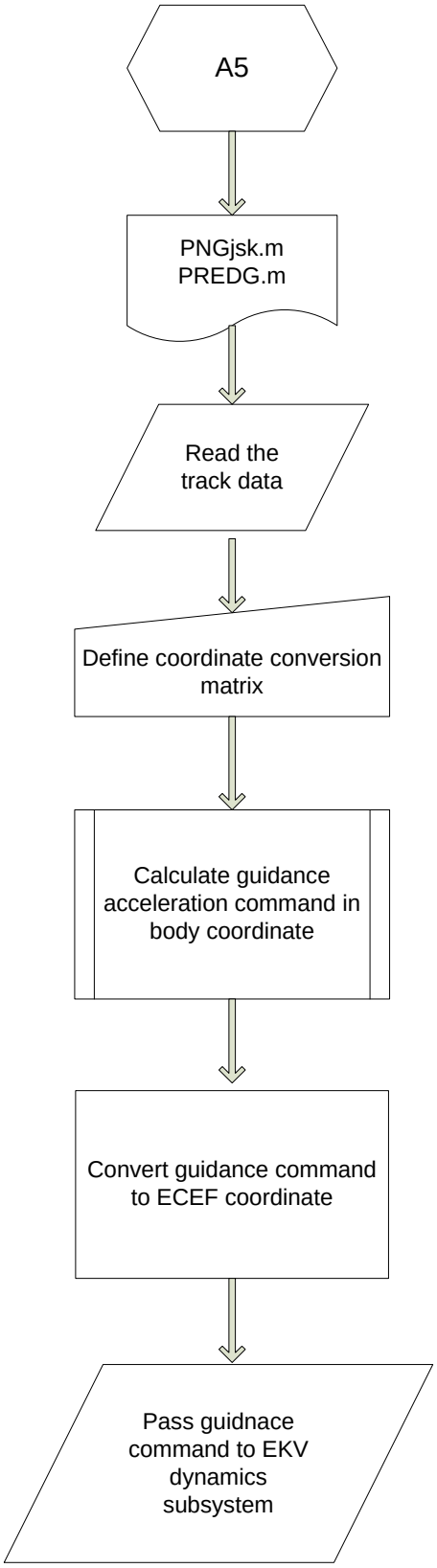
A5
PNGjsk.m
PREDG.m
Read the
track data
Define coordinate conversion
matrix
Calculate guidance
acceleration command in
body coordinate
Convert guidance command
to ECEF coordinate
Pass guidnace
command to EKV
dynamics
subsystem

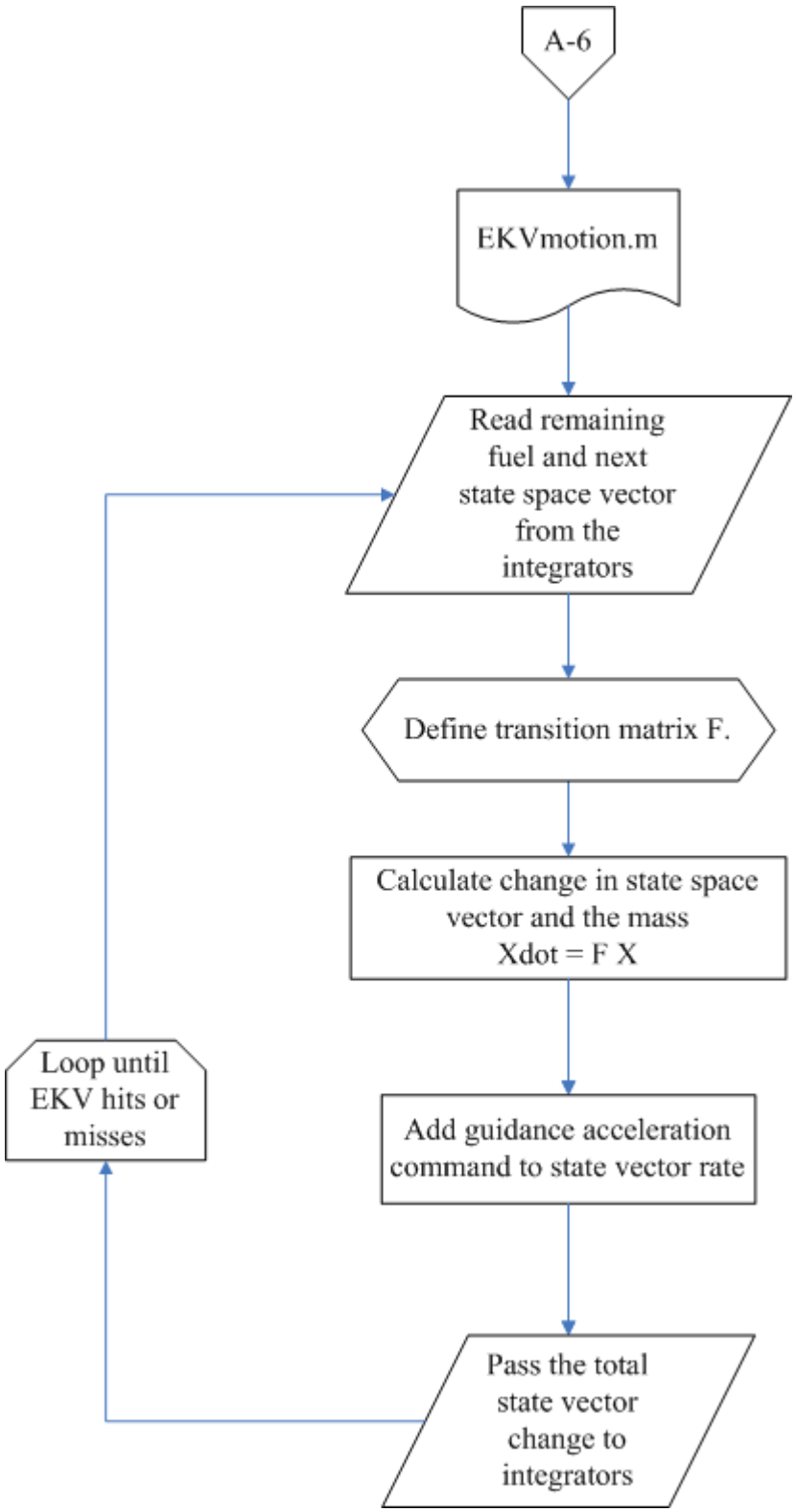
A-6
EKVmotion.m
Read remaining fuel and next state space vector from the integrators
Define transition matrix F.
Calculate change in state space vector and the mass Xdot = F X
Add guidance acceleration command to state vector rate
Pass the total state vector change to integrators
Loop until EKV hits or misses

LIST OF REFERENCES


[1] Paul Zarchan, *Tactical and Strategic Missile Guidance*, American Institute of Aeronautics and Astronautics, Reston, VA, 2002.

[2] Ahmet Tarik Aydin, ”Single orbit selection and new hybrid guidance for space based exo-atmospheric kill vehicles for multiple ICBM launch locations” Master’s Thesis, Naval Postgraduate School, September 2005.

[3] Paul Zarchan, *Ballistic missile defense*, Science & Global Security, Volume 8, 1998, pp. 99-124.

[4] Hari B. Hablani, “Endgame guidance and relative navigation of strategic interceptors with delays” *Journal of Guidance, Control, and Dynamics*, Vol. 29, No. 1, January-February 2006, pp.82-94.

[5] Y. Kashiwagi, “Prediction of Ballistic Missile Trajectories”, Memorandom 37, Defense Technical Information Center, June 1963.

[6] Lawrence, R.V., “Advanced Missile Guidance”, AGARD Lecture series 173, Paper 5, Sept. 1990.

[7] A. T. Aydin, P.E. Pace, M. Tummala, “Orbit Selection for Space-based Interception of a Select ICBM Case,” IEEE International Conference on Systems, Man and Cybernetics, HI, October 2005.

[8] Ground-based Midcourse Defense (GMD) System Exo-atmospheric Kill Vehicle(EKV) http://www.raytheon.com/products/ekv/, last accessed 11 Sep 2005.

[9] Hari B. Hablani and David W. Pearson, “Miss distance error analysis of exo-atmospheric interceptors” *Journal of Guidance, Control, and Dynamics*, Vol. 27, No. 2, March-April 2004, pp. 283-289.

[10] Hari B. Hablani and David W. Pearson, “Determination of guidance parameters of exo-atmospheric interceptors via miss distance error analysis” AIAA 2001-4279,

A01-37145, AIAA Guidance, Navigation and Control Conference and Exhibit, 6-9 August 2001, Montreal, Canada.

[11] Murtaugh, S.A., and Criel, H.E., "Fundamentals of Proportional Navigation", *IEEE Spectrum*, vol.3, Dec. 1996, pp. 75-85.

[12] Nesline, F.W., and Zarchan, P., "A new look at classical vs modern homing missile guidance," *Journal of Guidance and Control*, Vol.4, No.1,1981, pp.78-85.

[13] Spencer, A., and Moore, W., "Design Trade-Offs for Homing Missiles", AIAA Paper 92-2755, May 1992.

[14] Dionne, D., Michalska, H., Rabbath, C.A., "A predictive guidance law with uncertain information about target state", American Control Conference, June 2006.

[15] Kubilay Uzun, "Requirements and Limitations of Boost-Phase Ballistic Missile Intercept Systems," Master's Thesis, Naval Postgraduate School, September 2004.

## INITIAL DISTRIBUTION LIST

1. Defense Technical Information Center
   Ft. Belvoir, Virginia

2. Dudley Knox Library
   Naval Postgraduate School
   Monterey, CA

3. Prof. Phillip E. Pace
   Department of Electrical and Computer Engineering
   Monterey, CA

4. Prof. James B. Michael
   Department of Electrical and Computer Engineering
   Monterey, CA

5. Prof. Robert G. Hutchins
   Department of Electrical and Computer Engineering
   Monterey, CA

6. Prof. Man-tak Shing
   Department of Computer Science
   Monterey, CA