ANALYZING THE INTERDICTION OF SEA-BORNE THREATS USING SIMULATION OPTIMIZATION

THESIS

Kristen L. Cavallaro, Captain, USAF

AFIT/GOR/ENS/07-03

DEPARTMENT OF THE AIR FORCE
AIR UNIVERSITY

AIR FORCE INSTITUTE OF TECHNOLOGY
Wright-Patterson Air Force Base, Ohio

APPROVED FOR PUBLIC RELEASE; DISTRIBUTION UNLIMITED.

The views expressed in this thesis are those of the author and do not reflect the official policy or position of the United States Air Force, Department of Defense, or the United States Government.

AFIT/GOR/ENS/07-03

ANALYZING THE INTERDICTION OF SEA-BORNE THREATS USING SIMULATION OPTIMIZATION

THESIS

Presented to the Faculty

Department of Operational Sciences

Graduate School of Engineering and Management

Air Force Institute of Technology

Air University

Air Education and Training Command

In Partial Fulfillment of the Requirements for the

Degree of Master of Science in Operations Research

Kristen L. Cavallaro, BS

Captain, USAF

March 2007

APPROVED FOR PUBLIC RELEASE; DISTRIBUTION UNLIMITED.

AFIT/GOR/ENS/07-03

ANALYZING THE INTERDICTION OF SEA-BORNE THREATS USING SIMULATION OPTIMIZATION

Kristen L. Cavallaro, BS
Captain, United States Air Force

Approved:

Dr. Sharif H. Melouk, PhD (Chairman) Assistant Professor of Operations Research	Date
Dr. Marcus B. Perry, PhD (Member) Assistant Professor of Operations Research	Date

Abstract

Worldwide, maritime trade accounts for approximately 80% of all trade by volume and is expected to double in the next twenty years. Prior to September 11, 2001, Ports, Waterways, and Coastal Security (PWCS) was afforded only 1 percent of United States Coast Guard (USCG) resources. Today, it accounts for nearly 22 percent of dedicated USCG resources. Tactical assessment of resource requirements and operational limitations on the PWCS mission is necessary for more effective management of USCG assets to meet the broader range of competing missions. This research effort involves the development and validation of a discrete-event simulation model of the at-sea vessel interdiction process utilizing USCG assets. Through a simulation optimization approach, our research uses the efficiency of a localized search algorithm interfaced with the simulation model to assess resource allocation levels of USCG assets in the interception, boarding and control, and inspection processes that compose the overall interdiction process with the overall objective of minimizing process time requirements.

Dedication

To My Family and Friends

Acknowledgments

To Dr. Melouk and Dr. Perry, thank you for your guidance and support throughout this process. To my fellow GORs, thank you for your friendship. To Capt Herbranson, your expertise and devotion to excellence, not only in academia, but every facet of officership, is one of the best examples of leadership I have experienced. You and Capt Harrell made this thesis possible. To my family, thank you for all your love and encouragement. Last, but never least, I thank God for giving me this opportunity and the strength to see it through.

Kristen Lee Cavallaro

Table of Contents

Page

Abstract iv

Dedication v

Table of Contents vii

List of Figures x

List of Tables xi

1. Introduction 1
   1.1. Background 1
   1.2. Motivation 8
   1.3. Problem Statement 10
   1.4. Research Objectives 11
   1.5. Organization 12

2. Literature Review 13
   2.1. Maritime and Port Studies 13
   2.2. United States Coast Guard Studies 14
   2.3. Simulation Optimization 15
      2.3.1. Tabu Search 17
   2.4. Conclusion 19

3. Methodology 20
   3.1. Overview 20
   3.2. Problem Statement 21
   3.3. Conceptual Model 24
   3.4. Simulation Optimization 26
      3.4.1. Simulation Component 26
         3.4.1.1 Simulation Software 27
         3.4.1.2 Interdiction Model 27
         3.4.1.3 Simulation Model 37
      3.4.2. Optimization Component 44
         3.4.2.1 Simulation Optimization Interface 44
   3.5. An Example 46
   3.6. Verification and Validation 49
      3.6.1. Verification of Model Logic 49
      3.6.2. Model Validation 49
   3.7. Conclusion 50

4. Results and Analysis 51
   4.1. Overview 51

4.2. Experimental Setup 51
4.3. Experimentation Results 53
4.3.1. Performance Measure 53
4.3.2. Asset Utilization Rates 54
4.4. Evaluation of Strategies for USCG Resource Allocation 57
4.4.1. strategy 1: Increase Fleet and/or Locations of WPB patrol boats 58
4.4.2. strategy 2: Integrate Inspection Team with Deployed Cutters 58
4.4.3. strategy 3: Develop Asset-Specific CONOPS 59
4.5. Conclusion 60

5. Conclusion and Future Work 61
5.1. Simulation Optimization 61
5.2. Summary of Findings 61
5.3. Applicability 62
5.4. Recommendations for Future Research 63
5.4.1. Model Enhancements 63
5.4.2. Agent-Based Simulation 64
5.4.3. Military Applications 64
5.5. Summary 65

Appendix A: List of Acronyms 66

Appendix B: USCG Study Assets 67

Appendix C: Matlab Code 69

Appendix D: Simulation Model 73

Bibliography 81

List of Figures

Page
Figure 1-1: Layered Approach to Border and Transportation Security 10
Figure 2-1: Interaction between Simulation and Optimization Components 16
Figure 3-1: Objectives Hierarchy for the USCG Interdiction Problem 23
Figure 3-2: Conceptual Interception Process 24
Figure 3-3: United States Coast Guard Districts 28
Figure 3-4: Area of Study 29
Figure 3-5: Vessel Sizes 33
Figure 3-6: USCG Interdiction Model 38
Figure 3-7: Team Transport Submodel 40
Figure 3-8: Operational Usage Model 42
Figure 3-9: SAR Submodel 43
Figure 3-10: Coordination between Simulation and Matlab Heuristic 45
Figure 3-11: Pseudo-Code for USCG Interdiction Problem 46
Figure 3-12: Network Diagram of Nodes in USCG Resource Allocation Problem 48
Figure 3-13: Simulation Optimization Example of First Three Iterations of Search 48
Figure 4-1: Initialization Bias 52

List of Tables

Page
Table 3-1: Modeled Deepwater Assets from the 7th District 28
Table 3-2: USCG Deepwater Missions Organized by Strategic Goal 30
Table 3-3: Constructed Scale for Vessel Size 33
Table 3-4: Ship Type Weighting with Corresponding Percentage of 35
Table 3-5: Percentage of Vessel Calls to US Ports in 2005 36
Table 3-6: Deepwater Asset Percent Usage/Day/Mission Averaged over 2004 44
Table 4-1: Performance Measure Statistics 54
Table 4-2: Nine Scenarios for Asset Utilization Study 55
Table 4-3: Resource Utilization under Low Threat Interdiction Operations 56
Table 4-4: Resource Utilization under Medium Threat Interdiction Operations 56
Table 4-5: Resource Utilization under High Threat Interdiction Operations 57

ANALYZING THE INTERDICTION OF SEA-BORNE THREATS USING SIMULATION OPTIMIZATION

1. Introduction

1.1. Background

The events of September 11, 2001 demonstrated the length to which terrorists would go to harm Americans and the economy of the United States. A number of those involved in the 9/11 plot lived among us as our neighbors and trained to harm us on our very own soil. The idea that an enemy would use the infrastructure of the US against its people is not a new strategy in warfare, but one with unsettling consequences for a country that has traditionally been a land of immigrants. Based on 9/11, it is easy to believe that future attacks will also come from within the US. Five years later, their actions have resulted in a deep, inward look at what US national security really means and how the use of unconventional means of warfare can be prevented. This thesis focuses on a concept of operations in development by the United States Coast Guard to address the vulnerability of US ports and waterways to people, cargoes, and/or vessels with the intent to harm.

1.1.1 Emerging Concern

> "Over 90 percent of the nation's $5.3 billion annual investment in the TSA goes to aviation—to fight the last war…. While commercial aviation remains a possible target, terrorists may turn their attention to other modes. Opportunities to do harm are as great, or greater, in maritime or surface transportation. Initiatives to secure shipping containers have just begun. Surface transportation systems such as railroads and mass transit remain hard to protect because they are so accessible and extensive." [1]

The passage above was taken from the final 9/11 Commission Report written in 2002. The take home message is US maritime security is necessary for national security. The true expansiveness of the problem can be understood with a few statistics. Maritime trade accounts for approximately 80 percent of all world trade by volume. Waterborne domestic commerce in 2004 accounted for 25 percent of the United State's Gross Domestic Product [16]. The total volume of domestic and international trade is expected to double in the next twenty years according to the Maritime Transportation Security Act of 2002. The economic collapse of the US maritime trade industry from a terrorist attack, a shutdown of trade due to a breach of security, or even a union strike (as evidenced by the dispute between the Pacific Maritime Association and the International Longshoremens and Wharehousemens Union in 2002) has serious implications to the US and world economies. The impact of a weapon reaching a major city through a US port is even more daunting.

Assessments from security analysts reveal the threat from terrorist attack is becoming increasingly likely at US ports where it is not unimaginable that a passenger, vessel, or the vessel's cargo, can become the conduit for the next attack on American soil. Since these observations, major efforts have been made to reduce US vulnerability to acts of terrorism propagated by insufficient border and port security, but we are not there yet.

The US shares nearly 7,500 miles of land border with Canada and Mexico, over 12,000 miles of coast line along the Atlantic and Pacific oceans, and more than 300 sea and river ports with over 3,700 cargo and passenger terminals. While the focus on maritime activities is getting sharper, the ability to perform 100 percent screening of all vessels, cargoes, and persons that enter US waters remains infeasible, being limited by

resources available to perform screening, the structure of the global trade system which relies on a "just in time" strategy to reduce storage costs, and technological limitations on non-invasive screening capability intended to reduce the impact to the flow of commerce. Clearly, a middle ground is needed.

1.1.2 Border Security Measures

In response to US maritime vulnerabilities, programs and policies have been enacted, funding for the PWCS mission has increased, and technological and procedural changes have been implemented.

Maritime Security Initiatives and Programs

In the realm of programs and policies, the International Maritime Organization implemented a group of regulations known as the Safety of Life at Sea (SOLAS) to improve safety at sea, standardize protection measures, facilitate trade among seafaring states, and protect the marine environment. In December 2002, the Maritime Safety Committee (MSC 76) added the International Ship and Port Facility Security (ISPS) Code to SOLAS aimed at enhancing maritime security on board ships and at ship/port interface areas. This group of regulations provides the foundation for procedural safety and security cooperation of peaceful countries with the United States.

Two specific implementations aimed at protecting the US from dangerous cargoes are the Container Security Initiative (CSI) and the Smart Box Initiative. Some would argue that containers pose the greatest threat to US national security because containers are difficult to screen, one container ship can hold thousands of them from multiple suppliers originating from various countries (making intelligence key to finding the

proverbial needle in the haystack), and as containers are offloaded, they can be stored for days on site or driven by trailer into an unsuspecting US city.

The Container Security Initiative (CSI) promotes the development of bi-lateral agreements between the United States and foreign countries to pre-screen high-risk containers in origination ports. Several hundred Customs and Border Protection officers have been placed at 42 major foreign seaports to pre-screen cargo containers before they are loaded onto vessels bound for the US.

The Smart Box Initiative promotes the use of "tamper evident" containers to enhance security of containerized shipping. A mechanical seal affixed to the container door along with an electronic container security device alerts inspectors to the attempted intrusion.

Oversight programs such as Operation Safe Commerce (OSC), which includes membership of the Department of Homeland Security (Office of Domestic Preparedness, Border and Transportation Security Directorate, the Bureau of Customs and Border Protection and the US Coast Guard) and the Departments of Transportation, Commerce, and State, seek to identify vulnerabilities in container supply chain security.

The CSI and Smart Box Initiatives and the OSC program have been shown to add value to the objective of national security, but do not lend support to the other types of cargo shipped globally every day. The idea of cargo-tampering prior to delivery to the dock has been addressed on numerous occasions leading the US to develop such programs as the Customs-Trade Partnership against Terrorism (C-TPAT). This program seeks to build a relationship between the US and the participant in the program allowing

enforcement of policies, plans, and procedures that maintain the integrity of their entire supply chain.

More information about maritime regulation can be found at the following websites: International Maritime Organization (www.imo.org), Customs and Border Protection (www.cbp.gov), or through the Federal Maritime Commission (www.fmc.gov).

While not all-encompassing as of yet, these programs and policies make up the first major stride to secure the US shipping industry and directly impact this study. While the use of containers has conjured specific initiatives to enhance security, the vulnerability of other types of cargo, people such as vessel crew and passengers aboard cruise ships, as well as the vessel itself, have all become potential points of vulnerability. However, they are addressed via procedural implementations such as visual inspection until technological implementations can be enforced.

Ports, Waterways, and Coastal Security

At the present time, the primary methods for detecting potential terrorist activity are through the use of radiological detectors, visual inspection, and intelligence. The ability to perform 100 percent screening of all cargoes, vessels and people entering the US is infeasible due to limitations on resources to perform the screening process, technology that allows for efficient screening, and the current structure of the global supply system which operates under a “just in time” policy set up to reduce storage time and cost.

Technological and Procedural Implementation

At the present time, the primary methods for detecting potential terrorist activity are through the use of radiological detectors, visual inspection, and intelligence. The ability to perform 100 percent screening of all cargoes, vessels and people entering the US is infeasible due to limitations on resources to perform the screening process, technology that allows for efficient screening, and the current structure of the global supply system which operates under a "just in time" policy set up to reduce storage time and cost.

Radiological detectors used by USCG personnel are typically handheld devices provided to each member of an inspection team or port screening personnel. A procedural method of detection is the visual inspection of cargo either at the originating port or aboard the targeted vessel during the at-sea inspection. Visual inspections require the ability to reach the cargo whether it is contained in a container or in a cargo hold. If located in a container, cargo may be required to be unloaded from the container for inspection.

Another procedural change to prior doctrine is the targeting of non-compliant vessels, cargoes, and people through review of intelligence reports and indications by Customs and Border Protection personnel located at the originating port. By targeting potential threats before they enter US waters is a fairly new concept called "pushing out" the borders discussed in Section 1.1.3.

1.1.3 Layered Approach to Border and Transportation Security

In "Border and Transportation Security: Possible New Directions and Policy Options," [29] addresses the role of Border and Transportation Security in Homeland Defense. Congressional concern increased following multiple attacks in the 1990s, and culminated after the attacks of 9/11 with several studies furnishing measures to protect the nation from future attacks. Congressional policy actions such as broadening efforts to understand the terrorist threat through the creation of the Gilmore Commission, the Hart-Rudman Commission, and the Bremer Commission; the Aviation and Transportation Security Act of 2001 focused on specific actions to counter an immediate threat; creation of the Department of Homeland Security to provide an organizational framework for subsequent efforts; procedurally, the USA PATRIOT Act was implemented to provide tools for addressing the new emerging threats. Congressional concern went from broad to specific and back to broad when it became evident that the effort to meet the challenge was not aggressive enough. The requirement of a more strategic approach through integrated terrorist watch-lists and measures to address other forms of transit, were highlighted in the final 9/11 Commission report, which stressed the need for port security.

The authors presented a "layered" approach defining points of vulnerability in homeland security as transportation staff, passengers, conveyances, access control, cargo and baggage, ports, and security en route. A visual depiction of this concept, according to W. Robinson et al., is a series of concentric screens, with the outermost screen representing the efforts of prevention overseas; the middle screen focuses on protection of the homeland through interdiction efforts at the borders and in the transportation

system; the most inner screen represents emergency response and preparedness. The bottom line is failure of any one layer would not be fatal.

The concept of "pushing out" U.S. borders is hard to attribute to one specific author, but has become the dominant conceptual solution to handling the threat of terrorism. Multiple and overlapping layers (or measures) means more opportunity for interdiction of threats to U.S. national security.

In discussions on this thesis project, the USCG elaborated on a similar strategy in development to address port security. The first line of defense is the efforts of Customs and Border Protection at foreign ports to screen cargo before it is loaded on a vessel bound for the United States. The second line of defense is the targeting and interdiction of high risk vessels, identified through intelligence gathering efforts, before they reach US waters. The third line of defense is screening efforts at US ports. This thesis focuses on the middle layer representing the interdiction of threats to national security. While information from CBP and ICE influence the targeting of high risk vessels either by cargo or crew, respectively, the interdiction and initial inspection efforts are performed by the USCG.

1.2. Motivation

The concept of "pushing out" United States borders is hard to attribute to one specific author, but has become the dominant conceptual solution to handling the threat of terrorism in the maritime domain. "Pushing out the border" is a concept that defines a notional border created beyond the physical borders of the US at which layers of security measures are implemented. Robinson et al. [29] introduce this concept of a layered

approach to border and transportation security with multiple and overlapping layers (or measures) to provide more opportunities for interdiction of threats to US national security. Visually, the authors describe the overall homeland security effort as a series of concentric screens where the outermost screen represents preventative efforts outside our borders, i.e. inspections of goods at foreign ports; the middle screen represents interdiction efforts at the "border", i.e. land borders and coastlines; and the most inner screen representing emergency preparedness and response, i.e. healthcare and clean up efforts after an attack.

In discussions on this thesis project, the Prevention Liaison to the Deepwater Sponsor from the USCG described a similar strategy to address port security. Figure 1-1 depicts this layered approach to border and transportation security. The first line of defense is the efforts of Customs and Border Protection at foreign ports to screen cargo before it is loaded on a vessel bound for the United States. The second line of defense is the targeting and interdiction of high risk vessels, identified through intelligence gathering efforts, before they reach US waters. The third line of defense is screening efforts at US ports. While information from CBP and ICE influence the targeting of high risk vessels either by cargo or crew, respectively, the interdiction and initial inspection efforts are performed by the USCG. This thesis focuses on the middle layer representing the interdiction of threats to national security.

Acknowledging this layered concept and an expressed desire by the Prevention Liaison to the Deepwater Sponsor (G-RCD-1) of the USCG for a tactical-level assessment of measures of performance for deepwater assets in response to a sea-borne

threat, this thesis focuses on the middle layer representing the interdiction of targeted vessels en route to a US port.

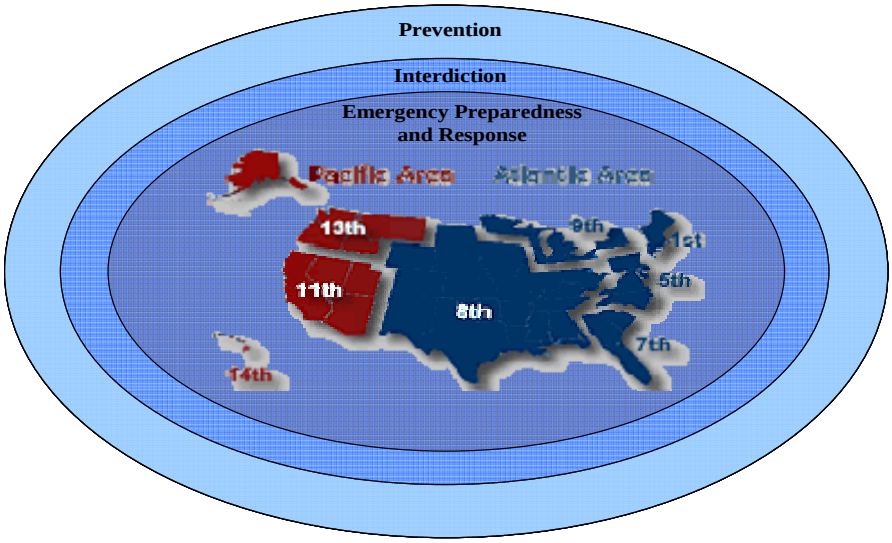

Figure 1-1: Layered Approach to Border and Transportation Security

1.3. Problem Statement

The problem at hand is one of growing concern. The use of US ports to transport a person or weapon intended to do harm within the United States is possible. In the last five years, efforts to suppress this threat have taken front stage, but there is not one all encompassing solution. This is a problem requiring a multi-pronged approach. Congressional oversight has pushed measures requiring 100 percent screening of all vessels, cargoes, and people at US ports. At this point in time, this requirement is infeasible considering the resources necessary to perform the job. The USCG is looking into one potential prong in the approach to risk reduction at US ports. Specifically, they

have developed a Concept of Operations (CONOPS) for performing more at-sea inspections. Before implementing a CONOPS, they must review force structuring to determine the impact to other USCG mission areas.

This thesis focuses on the investigation of deepwater efforts in the interdiction layer of defense described above as it relates to capability and availability of assets and execution of mission requirements in the performance of at-sea vessel interdiction, boarding and control of targeted vessel, and subsequent inspection.

1.4. Research Objectives

In this work, we develop a framework for analyzing a USCG concept of operations (CONOPS) using simulation optimization. We describe the three processes involved in interdiction operations: interception, control and boarding, and inspection of a targeted vessel, through the use of a discrete-event simulation model. We address resource utilization of USCG assets in typical day to day missions that would compete with the interdiction mission if the CONOPS were implemented. This addition to the model provides a realistic account of expected resource availability across all USCG missions.

Further, we interfaced the model with a metaheuristic in this simulation optimization approach to lay a foundation for future expansion of the USCG resource allocation problem.

The impact of implementing the CONOPS is assessed using varying mission ops tempos for the interdiction model and the competing mission model. Specifically, we look at low, medium, and high asset usages for each model with the purpose of

determining the expected utilization of the assets under these conditions. Three performance measures are evaluated in this study:

1. Investigation of time requirements for interception, boarding and control, and inspection(s);
2. Investigation of USCG asset utilization in the mission-constrained environment;
3. Identification of potential USCG strategies for the at-sea interdiction mission based on 1 and 2 above.

The outcome of this thesis includes recommendations for force-structuring to implement the at-sea interception CONOPS based on current resource allocations.

1.5. Organization

The remainder of this thesis is organized as follows. Chapter two provides a review of relevant maritime and USCG studies, a synopsis of maritime programs and policies, and background on the methodologies applied in this thesis. Chapter three elaborates on the simulation model design and application of the heuristic to the neighborhood of solutions. Chapter four provides the results of the study and statistical analysis when applicable. Chapter five concludes with a discussion of the contributions of this research and potential follow-on studies.

2. Literature Review

This chapter addresses previous maritime and port studies, studies specific to maritime security, and a discussion of the simulation optimization technique applied in this research. Each subtopic represents a considerable body of work and there is insufficient space in this thesis to adequately summarize all related materials. Thus, we have attempted to build an adequate understanding of the environment under study and highlight those works that directly relate to the problem being solved.

2.1. Maritime and Port Studies

Numerous maritime and port studies have been performed using simulation modeling. Simulation has assisted in investment planning for Istanbul seaport and development of future berth requirements at a third-world port [36]. It has also aided in multiple container terminal studies. Shabayek et al. investigated the prediction accuracy of a simulation of container terminal operations compared to Hong Kong's port operations [32]. Ballis modeled straddle carriers in a container terminal to evaluate different configurations of the system [6]. Chung et al. looked to reduce total loading time of a transtainer-based container port with a buffer space [10].

Intermodal transportation in the port environment has also been studied. Parola et al. developed a discrete-event simulation modeling approach to evaluate future growth potential of two Italian ports in the Ligurian Sea using various scenarios of intermodal travel options [27]. Valetin et al. used Arena simulation software to model a large maritime infrastructure system at the port of Tanger in Morocco to evaluate the number of ships supportable by the port and the optimum infrastructure considering

environmental effects [40]. A study by Sharpe et al. who simulated the inspection process of cargo containers at US seaports, determined the configuration of inspection processes that achieve the largest number of inspected containers at the lowest cost [33].

Most of the studies referenced above are concerned with simulation of port-centric environments—port-side environments. Simulations in the sea environment are difficult to find in the literature. In 2005, van Rensburg et al. simulated container transport by container vessel [42]. However, specific literature that addresses security inspections at sea is not available. This research addresses this deficiency through the study of the at-sea USCG interdiction process.

2.2. United States Coast Guard Studies

More related to this study are the works of Smith and Bailey et al. Smith performed a study of demands on Coast Guard assets for search and rescue services with the ultimate objective of finding the near-optimal solution by comparing multiple simulation outputs at various resource levels [34]. Bailey et al. develop a methodology for determining the operational efficiency of cutter patrol schedules in response to prevention, disruption, and punishment of acts of smuggling. An objective function containing patrol, day, and cutter type variables, generates a dynamic program that describes the interaction between the cutter and smuggler with the overall objective of finding the smuggler strategy that maximizes the mean profit attained by the smuggler [5].

The use of simulation to address large resource allocation problems is not a new concept to the Coast Guard. The USCG has funded simulation projects such as the

search and rescue Simulation (SARSIM) in order to assess allocation of resources as the configuration of SAR requirements increases in complexity.

More recently, the United States Coast Guard funded the MarOpsSim to develop a simulation of strategic homeland security operations under the Deepwater Maritime Operational Effectiveness Simulation (DMOES) program. This campaign-level model was built in 2003 to assist USCG leadership in large-scale, “system-of-system”, force planning. While useful as a strategic predictor of force requirements, it lacks insight into specific mission requirements such as the PWCS mission. The model presented in this study aims to provide this insight for the at-sea interdiction and inspection process employed by the USCG. An important element to these processes is the implementation of maritime programs and policies created to enhance maritime safety and security.

2.3. Simulation Optimization

One of the most powerful aspects of simulation is that it allows the researcher to study a system that may not be available for study due to operational constraints, complexity, safety concerns, or because it does not yet exist. When a system is not in existence, a simulation model of the proposed system allows the researcher/user to collect data about the modeled system in order to understand how it is expected to work. An example of this is the development of the Boeing 777 commercial aircraft. The 777 was simulated by computer before any part was built—the design made robust before assembly began on the production line. The Boeing Company was able to reduce costs and risks in production while increasing sales potential through computer-aided design. The 777 is arguably one of the best practical examples of simulation optimization, but it

is only one form of an expansive field of numerous applications termed “simulation optimization.” [7]

Simulation optimization, the application of an optimization tool such as a metaheuristic with computer simulation, was born of the need to solve complex problems efficiently. The merging of optimization with simulation offered a new methodology for addressing systems with nonlinearities, combinatorial relationships, and/or stochastic characteristics. Simulation optimization has a wide range of applications, i.e. scheduling, resource allocation, assignment, transportation, routing, network design, graph theory, manufacturing, financial analysis, to name a few. Wherever complexity and/or uncertainty are present, the flexibility of simulation optimization can greatly enhance problem solving capability. In keeping with the military adage, “keep it simple,” choice of the heuristic is crucial to the characteristics of the search environment and heavily suited to the properties of that particular heuristic.

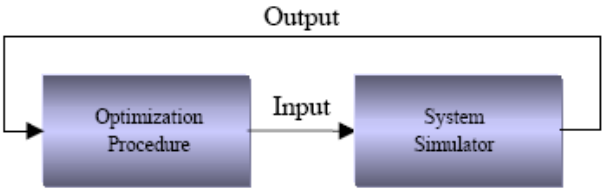

Figure 2-1: Interaction between Simulation and Optimization Components

The optimization procedure is instrumental in the selection of the input values and uses the output to determine the next set of input values in an iterative process. Figure 2-1: Interaction between Simulation and Optimization Components. Figure 2-1 presents this interaction between the optimizer and the simulator [2].

Heuristics were made popular in the mid-20th century by George Póyla who wrote the book "How to Solve it"—a different perspective on how to approach problems. Heuristics is considered a form of "cognitive strategy", a departure from systematic problem solving using tractable mathematics to a more intuitive approach that provides a cheap, educated guess [22].

2.3.1 *Tabu Search*

A specific metaheuristic developed by Glover in the late 1980s, tabu search, is a general iterative heuristic used for solving combinatorial optimization problems by invoking a local neighborhood search, then selecting the best solution in the neighborhood as the current new solution [18, 19, 20]. The use of a tabu list and the length of tenure of previously visited solutions to prevent cycling, in addition to aspiration criteria, which serves to bump the search to new neighborhoods within the solution space, provide the backbone to tabu search methodology. When problems are complex, heuristics such as tabu search can make finding a near-optimal solution easier and can be adapted to search regions with multiple optima to find a set among many sets of model specifications that lead to a near-optimal solution efficiently.

The true power of the tabu search algorithm lies in its flexible memory component which, depending on the length of the memory, can enhance the quality and performance of the heuristic. There are three types of memory components: short-term, intermediate-term, or long-term. The short term memory component provides tabu (or forbidden) conditions for the search and aspiration criteria while the medium and long term memories add intensification and diversification elements, respectively, to the

search. During search intensification, the algorithm records and compares features of solutions found during the search. Common features are then sought in new solutions in areas where good solutions had previously been found. Diversification, on the other hand, seeks to explore new regions or neighborhoods, i.e. move from one local optima to the next, with the hope of eventually moving a global optimum. With the use of aspiration criteria, a previously visited solution can be accepted if its meets specific criteria. A worse solution can replace a better solution if its attribute(s) are not tabu [30].

Tabu search has had success in a number of areas including the study of military operations such as air tanker refueling [9,35] and crew scheduling [11], in-theater vehicle routing [13], unmanned aerial vehicle routing [26], weapons assignment [14], and combat aircraft scheduling [8] to highlight a few examples.

The application of tabu search in simulation optimization has also been applied to a variety of problems—usually where complexity makes the problem nearly impossible to solve analytically. An indication of the important role of tabu search in practical problem solving can be seen in a study of a sequencing problem by Yang et al. [45]. While most researchers treat the flow-shop with multiple processors (FSMP) as a deterministic problem ignoring the stochastic nature of the real-world problem, Yang et al. modeled the nonlinearity and randomness of the FSMP environment, and then studied the system under varying conditions.

One more example of the utility of tabu search is its application in large-scale value-at-risk (VAR) optimization of an electrical power system by Gan et al. Using the flexibility, speed, and simplicity of a generalized tabu search algorithm, the authors adapted the search to address a nonlinear, mixed integer programming problem, known to

be NP-hard (nondeterministic polynomial time) with no available polynomial time algorithm. As the flexibility of tabu search is further confirmed through studies such as these, it becomes clear tabu search in simulation optimization can be a powerful tool to solve difficult problems [17]. These brief examples show that tabu search can be applied in many areas.

2.4. Conclusion

In this chapter, a brief overview of works in port and maritime research was provided. Studies of USCG systems were highlighted along with a concise discussion of the wide range of applications for simulation optimization, and specifically, the tabu search metaheuristic. The literature review revealed that although many works exist in simulation optimization, and a few in USCG applications, the marrying of simulation optimization with a tabu search applied to a USCG problem is not well addressed, if at all.

3. Methodology

Chapter two summarized applicable work in the field of maritime simulation, simulation optimization, and Coast Guard-specific operation modeling. In this chapter, we build the simulation optimization methodology for this thesis through a discussion of the simulation model and the optimization technique. In section 3.2, we review the problem at hand. In section 3.3, building upon the model details, we first discuss the conceptual model of the interdiction process and competing mission model, and then in section 3.4, we provide a discussion of the specific aspects of the simulation optimization effort, finishing with a synopsis of the methodology employed.

3.1. Overview

Numerous border and transportation security studies have focused on the vulnerability of US ports to attack by terrorist groups either through border infiltration by members of a group or delivery of a weapon meant to collaterally or economically harm the United States. Congressional bills have been passed to address and fund security screening initiatives at major US ports, but according to USCG officials and other sources, the ability to perform 100 percent screening at major US ports is infeasible under current technological and resource constraints considering the ramifications to the flow of commerce. As the ultimate authority of port, waterway, and coastal security, the USCG is cultivating a different approach to the problem—using simulation to provide insight into changes to doctrine and application of resources in order to efficiently manage a problem that is becoming more real every day—how to handle potential threats as far from US shores as possible.

3.2. Problem Statement

As discussed in chapter one, the problem we seek to address is how to minimize the amount of time required by USCG personnel and assets to perform an interdiction of a vessel that has been targeted through information sources as a potential risk to US security before it reaches a US port. Applying principles of decision analysis, the problem can be decomposed into three distinct processes:

1. Interception of targeted vessel
2. Control and boarding of vessel
3. Inspection of cargoes, vessel, and crew

The interception of the threat involves receipt of targeting information from intelligence sources, knowledge of threat location, direction and speed of movement, and selection of assets to intercept the Target of Interest (TOI). Interception may require one asset or combinations of assets to perform the mission. We make the assumption that selection of the target has already been made from intelligence sources at the start of the simulation.

Control and boarding is the process of subduing a non-compliant crew, accounting for all crew members, and checking for stowaways or immediate indications of intent to harm. Control of a hostile situation where the crew is deemed non-compliant can be considered dependent on the size of the crew and their intentions. Accounting for all crew members is directly related to the size of the crew and the propriety of the documentation presented. Checking for stowaways involves checking every crevice of the ship potentially inhabitable by a living organism. One aspect that can not be modeled with any accuracy is the ability to sense a dangerous situation or to sense harmful

intentions. Therefore, a time delay has been modeled to account for this action on the part of USCG personnel.

Inspection of cargo, vessel, and crew is a function of size and type of ship, size of crew, type of cargo, size and capability of the inspection team, and specificity of the threat. The size and type of ship directly affect the ease with which the inspection team can perform its job. The more challenging the configuration of the ship (i.e. container ship), the more time required to inspect. The size of the crew plays an important role in the review of intelligence documentation to determine the risk of ties to terrorist groups. The type of cargo may require greater scrutiny, such as a dry bulk carrier with tons of fertilizer on board or if a cargo manifest appears to have errors or the shipment was labeled as high risk by Customs and Border Protection. The size and capability of the inspection team are directly related to the method of delivery to the TOI. For instance, delivery via HH60 helicopter limits the size of the team to 6 persons. Another limitation is the WMD detection capability of teams deployed with cutter assets because they do not have the same inspection capability as other teams in the USCG. For these specific concerns, the team is treated as a random variable distributed triangular with a minimum of six, mode of eight, and maximum of ten, and only MSST or MSRT insertion is modeled. This aspect of the problem deserves more consideration than it will be given here, but should be studied as a means of maximizing inspections by selecting assets by capability.

Figure 3-1 represents a decomposition of our fundamental objective—to minimize the time required to interdict a targeted vessel—into three distinct mean objectives:

minimize time required to intercept vessel, board and control the vessel, and inspect the vessel, cargoes, and crew.

"Minimize time required to intercept targeted vessel," can be further decomposed into five measures of attainment of that objective: asset speed and location, threat location; sea conditions, and assets available to perform interception.

"Minimize time required to board and control targeted vessel," is measured by size of the targeted vessel, compliance of its crew to demands of USCG authorities, and targeted vessel crew size.

"Minimize time to inspect targeted vessel," can be measured through five attributes: size and type of targeted ship, size of the inspection team, targeted vessel crew size, and specificity of the intelligence.

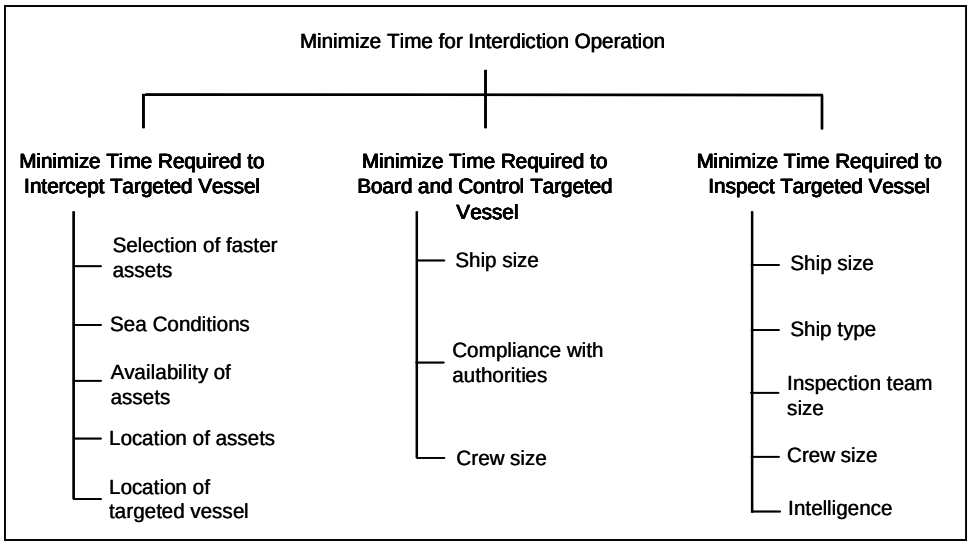

Figure 3-1: Objectives Hierarchy for the USCG Interdiction Problem

While most of these measures of the mean objectives are directly and naturally measurable, i.e. speed, availability, location of asset(s), crew size, and inspection team size, a scale would be required to describe ship size, ship type, intelligence, and

compliance. Although ship size can be measured in TEUs, the time required to check different types of cargo at the same TEU can be variable in nature. Because ships can be converted to hold different types of cargo, this also presents variability in how to address this aspect of the affected process times. Here, we defined this idea of decomposing the processes into factors that contribute to the objective function value of the different processes. However, due to the lack of data to legitimize the construction of these functions and guidance received from our USCG subject matter expert, we have chosen to mention them here and again in chapter five, but use a moderate approach to modeling the delays incurred by these processes.

3.3. Conceptual Model

The problem addressed in this research is to minimize the time required to intercept, board and control, and inspect sea-borne vessels that have been targeted as potential threats while they are in the deepwater environment (50 to 200 nautical miles).

The path that will induce the largest amount of variability in the solution is the interception portion of the model. The other two processes, boarding and control and inspection, are easily represented as a stochastic measure of time dependent on factors such as the size and type of vessel, and size and intent of crew. The graphical representation of the interception process is presented in **Error! Reference source not found.** with each possible path identified as a one way arc.

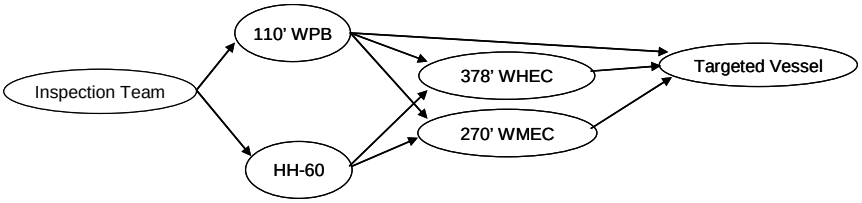

Figure 3-2: Conceptual Interception Process

We treat the problem as a network flow which provides a framework for the structure of the heuristic later discussed. Using integer programming, and assuming the objective function is linear in nature, the mathematical representation is

$$\begin{gathered} \textit{minimize} \sum \mathbf{cx} \\ \textit{s.t.}\ \mathbf{Ax} = \mathbf{b} \\ \mathbf{x_{ij} = 0 \text{ or } x_{ij} = 1} \end{gathered}$$

In this model, the row vector **c** represents the cost on each arc. In this case, the cost is the time required to traverse the arc; **x** represents the linear combination of arcs that compose a particular feasible solution of assets to perform the interdiction. The cost on each arc (or path) is calculated based on distance between the targeted vessel and the intercepting asset(s) and asset speed using the standard two-dimensional Cartesian formula for distance.

$$\text{Distance} = \sqrt{(x_{\text{asset}} - x_{\text{target}})^2 + (y_{\text{asset}} - y_{\text{target}})^2}$$

Dividing the distance by the speed of the intercepting assets gives the time required to travel to the targeted vessel. We treat the travel times as deterministic measures of time; however, a future upgrade to the model would be to incorporate a stochastic element to account for variations in travel times due to Sea Conditions.

A problem such as this presents an excellent opportunity for simulation to handle the diversity of the environment as well as the ability to prove a concept of operations that can't be proven with the real USCG assets due to budgetary and operational

limitations. The following sections identify key aspects of the operational environment that will be represented in the simulation environment.

3.4. Simulation Optimization

In this effort, we represent the processes of interdiction, control and boarding, and inspection to an available level of abstraction to estimate the time spent performing these processes. The following sections highlight the information deemed instrumental to answering the problem and approximations of key aspects.

3.4.1 *Simulation Component*

The simulation modeling effort begins with the accumulation of information from the environment that is pertinent to the model being built. Although exact replication of the real world system can lend much value and credibility to the study of the simulation and in some cases could be vital, i.e. training systems, one must make a judgment about whether such a level of abstraction is necessary for addressing the specific problem being studied.

In this section, we describe the simulation model structure used in this study and explain the logic and the model settings. The model is a composite of two models. One model investigates the specific at-sea interdiction mission while the other utilizes USCG resources based on a 2004 asset percent usage report provided by the USCG [41]. The purpose of the latter model is to mimic the expected resource utilization based on mission area of the assets being studied. Later in this work, we describe this latter model as the "competing missions model" or the "operational usage model" depending on the context of the discussion.

3.4.1.1 Simulation Software

The simulation component of this model was created using Arena version 10.0, a product of Rockwell Software that offers a user-friendly language for high-level graphical simulation. It provides easy-to-use tools for studying a system or multiple configurations of a system, real or not, and allows the user to implement different rule sets, restrictions, or enhancements to determine impacts to the system without affecting actual operations. Arena version 10.0 comes with input and output analysis software for thorough modeling of the system under study. Although Arena provides an optimizer along with the software package, we built our own interface to Arena to perform this function to demonstrate the effectiveness of a Matlab-Arena interface. For more information about Arena, please visit http://www.arenasimulation.com/.

3.4.1.2 Interdiction Model

The interdiction model represents the three processes of interdiction (interception, control and boarding, and inspection) as performed by assets in the deepwater environment. There are two components to the interdiction model, the creation of threat and the creation of the assets that will respond to the interdiction. Recall, the deepwater environment stretches from 50 to 200 nautical miles off the coast of the United States. The following section elaborates on this environment.

3.4.1.2.3 Area of Study

To more effectively manage resources to handle the multitude of missions at hand, the USCG has divided the United States into fourteen districts shown in Figure 3-3.

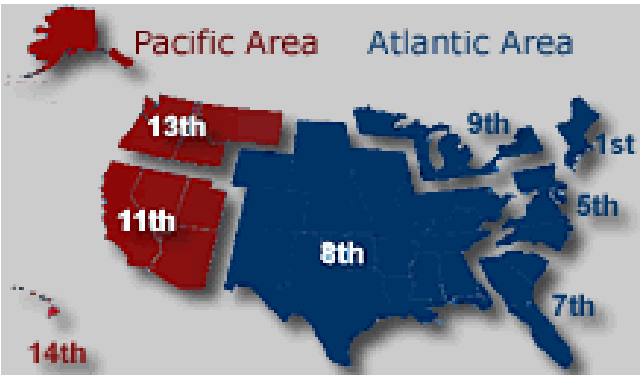

Figure 3-3: United States Coast Guard Districts

This study focuses on a portion of the 7th district stretching from Charleston, South Carolina, around the Florida peninsula, to the beginning of the Florida pan handle. This district was chosen for the maturity of its deepwater upgrades and the variety of assets located there. The portions of the 7th district not modeled are those operations that occur beyond the 50 to 200 nautical mile area around the coast of Florida. Table 3-1 provides a listing of the 7th district assets modeled in this effort with search areas identified in Figure 3-4.

Table 3-1: Modeled Deepwater Assets from the 7th District

ASSET	LOCATION
HH60	St. Petersburg, FL
HH65 Location 1	Cape Canaveral, FL
HH65 Location 2	Jacksonville, FL
HH65 Location 3	Savannah, GA
WPB Location 1	Charleston, SC
WPB Location 2	Key West, FL
WPB Location 3	Miami, FL
WPB Location 4	St. Petersburg, FL
270 ft. WMEC Location 1	Search Area 1
270 ft. WMEC Location 2	Search Area 1
378 ft. WHEC Location 1	Search Area 1
378 ft. WHEC Location 2	Search Area 1

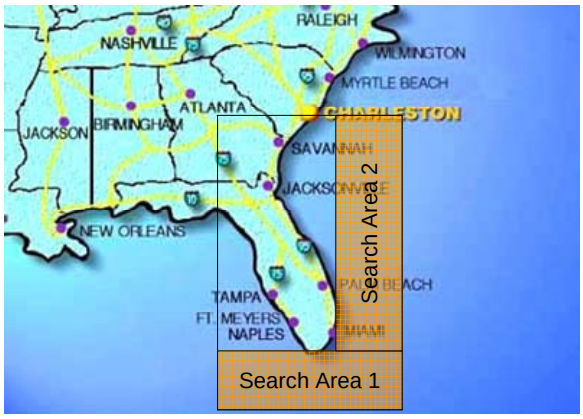

Figure 3-4: Area of Study

3.4.1.2.3 Integrated Deepwater System

The system under study is a group of missions performed by the Integrated Deepwater System (IDS), an acquisition program funded to extend the life of the aging USCG fleet and enhance capability to support a larger and more demanding set of missions.

<u>Deepwater Missions</u>

Deepwater missions are generally missions that occur between 50 and 200 nautical miles from US shores and they differ from the usual coastal zone missions by requiring extended on-scene presence, long transit distances to reach operating areas, forward deployment of forces, or a combination of these factors [41]. Table 3-2 presents the USCG Deepwater missions by strategic goal.

Perpetuated by the events of 9/11, missions related to homeland defense have gained top priority next to search and rescue (SAR) requirements. These missions are maritime homeland security (MHLS) under maritime security, maritime intercept

operations (MIO), port operations, security, and defense (POSD), and coastal sea control operations (CSCO) under national defense. Each of these missions has an impact on the percentage of time required to intercept, board and control, and inspect a targeted threat.

Table 3-2: USCG Deepwater Missions Organized by Strategic Goal

United States Coast Guard Deepwater Missions
Maritime Safety
search and rescue (SAR)
International Ice Patrol (IIP)
Maritime Security
Alien Migrant Interdiction Operations (AMIO)
Drug Interdiction (DRUG)
Living Marine Resource Enforcement (LMR) [Foreign Fishing Vessel (FFV) Incursions]
General Law Enforcement (GLE)
Maritime Homeland Security (MHLS)
Protection of Natural Resources
Maritime Pollution Enforcement and Response (MARPOL)
Foreign Vessel Inspection (FVI)
Lightering Zone Enforcement (LZE)
LMR [Domestic/International]
National Defense
Theater Security Cooperation (TSC) [formerly known as Peacetime Military Engagement (PME)]
General Defense Operations (GDO)
Maritime Intercept Operations (MIO)
Military Environmental Response Operations (MERO), formerly Environmental Defense Operations (EDO)
Port Operations, Security, and Defense (POSD)
Coastal Sea Control Operations (CSCO)

Deepwater Assets

Five types of USCG deepwater assets are modeled in the three processes under investigation. The 378 ft secretary class high endurance cutter (WHEC) has a maximum speed 29 kts and a long term endurance of 14,000 NM at 11 kts for 60 days. It can

evacuate up to 500 persons. As a method of conveyance to the targeted vessel, it would require vertical insertion of the inspection team via HH60.

The 270 ft famous class medium endurance cutter (WMEC) has a maximum speed of 19.5 kts or long term endurance of 9,900 NM at 12 kts for 45 days. The WMEC can support HH65 and HH60 operations and up to 450 evacuees.

The 110 ft patrol boat (WPB) has three variations (A, B, and C). Variation A has a maximum speed of 29.5 kts with maximum range of 3,300 NM at 13 kts. Variation B has a maximum speed of 29.5 kts with maximum range of 2,960 NM at 13 kts. Variation C has a maximum speed of 26 kts with a maximum range of 3,500 NM at 10 kts. Each variation has a patrol duration of 5 days and can support 150 evacuees. This asset has been modeled with the average speed of the three variations.

HH60J rotary-wing helicopter holds four crew and six survivors. It has an action radius of 292 NM and limited night and low-visibility search capability. The HH65A/B rotary wing helicopter holds four crew and three survivors. It has an action radius of 109 NM.

Inspection Team

The inspection team consists of six to ten members equipped to detect weapons of mass destruction (WMD) such as nuclear weapons. Biological and chemical-based weapons may not be as easy to detect through current technological means, but a visual inspection of potential threats would most likely alert the team to the need for a more thorough inspection at a remote location near the port where experts can further review the threat potential. These teams prepare for the mission at one of two staging areas, Elizabeth City, N.C. or Clearwater, FL.

3.4.1.2.3 Targeted Vessel

A sea-borne threat can be a small speed boat or a Post Panamax cargo ship. It can be a stowaway person, group, crew, or even the vessel itself. While a threat could be considered a ship that presents an ecological hazard due to poor implementation of safety standards, here a threat will be limited to something with the intent to do harm. A study of all traffic into US ports regardless of size and type of conveyance is necessary to evaluate the potential terrorist and environmental risk. However, this study will only focus on the interdiction of potential terrorist threats above 500 tons.

Vessel Size

This study is mainly concerned with shipping vessels ranging in size from 500 to 8,000 twenty-foot equivalent units (TEUs). Figure 3-5 shows vessel sizes in their respective generation and approximate age. The first and second generation of cargo ship can carry approximately 500 to 800 and 1,000 to 2,500 TEUs , respectively. The third and fourth generation can carry 3,000 to 5,000 TEUs. The fifth generation (Post Panamax) can carry 5,000 to 8,000 TEUs.

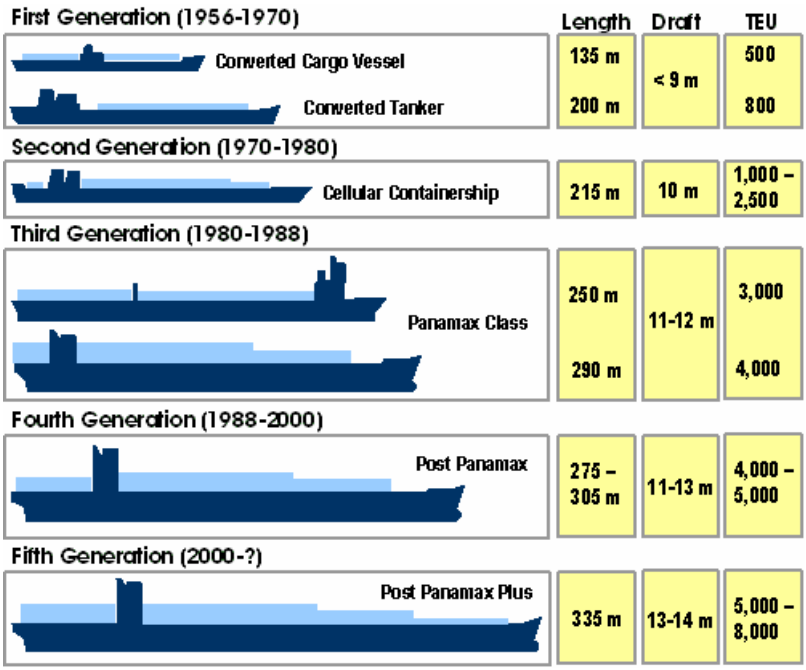

Figure 3-5: Vessel Sizes

A constructed scale for vessel size is presented in Table 3-3 to suggest a scale of weighting for ship size as it affects the ability to perform the three processes of interdiction.

Table 3-3: Constructed Scale for Vessel Size

Vessel Size	Ranking	% in Operation	Cumulative %
Generation 1	1	10	10
Generation 2	2	10	20
Generation 3	3	50	70
Generation 4	4	20	90
Generation 5	5	10	100

The percentage of vessels in operation based on size has been arbitrarily chosen to be 10 percent from generation 1, 2, and 5, 20 percent from generation 4, and 50 percent in the generation 3 category. This decision was made based on an assumption that the medium size vessel can traverse major canal systems while carrying a profitable cargo load.

Types of Ships

There are seven types of ships addressed in this study: tankers, container ships, dry bulk, ro-ro (roll on, roll off of vehicles or equipment), gas carriers (liquid natural gas), combination ships (part container, part bulk, etc.), and general cargo. An assumption is made that the most difficult vessel to control and inspect is the containership due to the large number of hiding spaces and numerous containers that are hard to screen and may be hard to reach while at sea. The second hardest to control and inspect is assumed to be a combination ship for the same reasons. The third most difficult to inspect is the ro-ro type due to the large number of vehicles that would need to evaluated for explosive devices.

The fourth, fifth, sixth, and seventh are tanker, gas, dry bulk, and general. The tanker as a mode of transport for crude oil and oil products has large areas that are not hospitable to living organisms making search areas smaller. However, this by no means negates the importance of understanding the threat a tanker poses as a terrorist weapon which is left for future study. Gas tankers such as liquid natural gas present a similar argument. General cargo and bulk are also assumed to be easier to control and inspect because of space limitations on the ship. Although it is important to note that bulk carriers can carry materials such as fertilizer which increase the potential to be used as a

bomb under the right conditions. This does not elevate the ease of control and inspection, but should be considered during evaluation of threat potential. Table 3-4 summarizes the seven vessel types discussed here and offers a weight scale based on the potential of each type of ship to be used in terrorist activity. The table also provides the cumulative percentage of foreign-flagged vessels by ship type.

Table 3-4: Ship Type Weighting with Corresponding Percentage of Foreign-Flagged Vessels

Ship Type	Weighting	# of Foreign-Flagged Vessels	Cumulative %
General	1	3,840	7
Dry Bulk	2	11,275	28
Gas	3	969	30
Tanker	4	16,442	61
Ro-Ro	5	4,425	69
Combo	6	414	70
Container	7	15,937	100
Total		53,302	100

Foreign-flagged vessels are highlighted in this study because, being registered in countries other than the US, they do not receive the same scrutiny as US-registered vessels. According to the Department of Transportation Maritime Administration, the percentage of vessel calls to US ports for the seven types of ships are presented in Table 3-5 below.

Table 3-5: Percentage of Vessel Calls to US Ports in 2005

Percent Vessel Calls to US Ports for 2005				
	Number of All Vessels	%	Number of Foreign-Flagged Vessels	%
Tanker	20,118	32.95	16,442	30.85
Container	18,542	30.37	15,937	29.90
Dry Bulk	11,406	18.68	11,275	21.15
Ro-Ro	5,663	9.28	4,425	8.30
Gas	969	1.59	969	1.82
Combo	414	0.68	414	0.78
General	3,935	6.45	3,840	7.20
Total	61,047	100	53,302	100

Ship Crew Size and Intent

In this study, crew size is treated as a constant value of 15 people based on information provided through Maerskline, a large Danish shipping company. Intent is something that can easily be masked, but in this study we treat the intent of the vessel operator and crew as observably compliant or non-compliant to orders from USCG authorities. It is treated as a discrete distribution with a 90 percent probability of non hostile interaction and a 10 percent probability of hostile interaction. The ability to determine intent could be developed through the study of multiple measures, i.e. vessel, cargo, and crew profiling, and deserves more attention than it will receive here due to limitations on available data.

Threat Specificity

Threat specificity is a determination made from the intelligence received on the targeted vessel, its crew, and/or its cargo. This variable is treated discretely with a 95 percent probability that the intelligence has identified a specific threat and a 5 percent

probability that the threat is non-specific. A specific threat is considered a certain person, vessel, or cargo that has been flagged as suspicious. A non-specific threat is one where the vessel may be known, but location of the threat on the ship or the true relation of the suspected person to terrorist ties is not fully understood.

3.4.1.3 Simulation Model

The simulation model is composed of the three process of interdiction: interception, boarding and control, and inspection. Figure 3-6 shows the USCG interdiction model developed for this study. In Figure 3-7, we present the submodel, "Team Transport" which shows the logic that composes the possible mechanisms of travel to the target. Recall that the inspection team can be transported to the targeted vessel through one of many paths described in Section 3.3. Although we lay out the groundwork for a more in depth study of how the characteristics of the threat may affect the process times studied in this thesis, without data to formulate these relationships, we have chosen to take a more conservative approach to modeling these effects.

Interception Process

The simulation begins with the simultaneous creation of the targeted vessel and the inspection team at a simulation time of zero. Targeted vessel creation has been set at a constant rate of one entity per 360 hours (or one month) for a maximum of 12 entities per replication. Team creation is limited to one team only, but is duplicated through the use of a separate module.

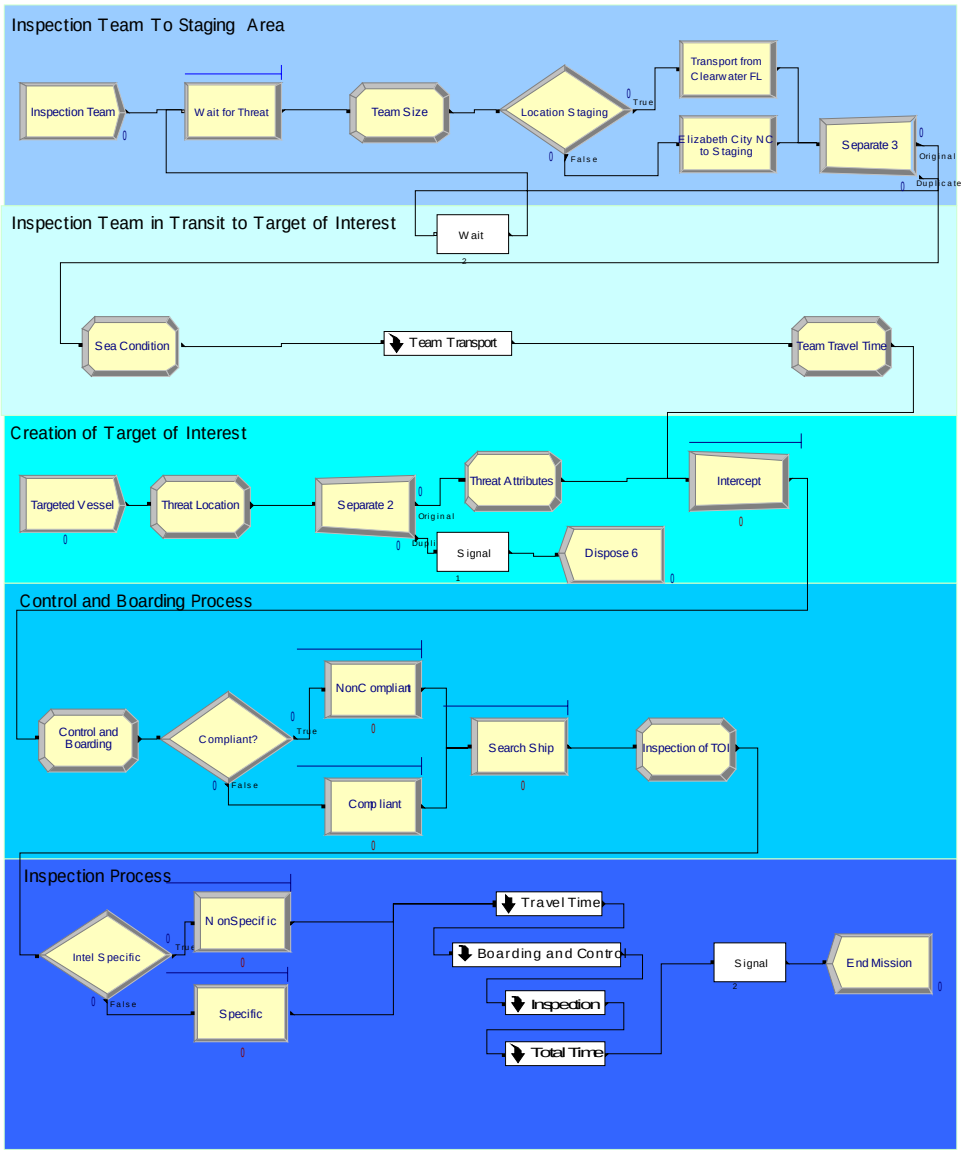

Figure 3-6: USCG Interdiction Model

The team is transported to a staging area where they prepare to embark on the interdiction mission. They can stage from one of two locations, Elizabeth City, NC, or Clearwater, FL. Depending on where they stage from, a delay will be incurred. Staging

from Elizabeth City, NC is modeled as a triangular distribution with a minimum time of 0.33 hours, a maximum time of 0.5 hours and a mode of 0.42 hours. Transport from Clearwater, FL is modeled as a constant of 0.083 hours. Due to the classification of the real values, these parameters represent a ballpark estimate.

The “Team Transport” submodel captures the logic associated with the interception process. In Figure 3-7, the first decision to be made is whether the sea conditions permit operations. The attribute “Sea Condition” is modeled as a discrete random integer between 1 and 5. Sea Conditions of 4 or greater restrict all operations. Following the Sea Condition block are blocks that convert inputs from the Matlab code such as assets involved in the engagement and their locations to a format understood by Arena. Where an alphanumeric string is used, it indicates the method(s) of conveyance by the inspection team. For instance, “HH602702” indicates that the team will be transported by HH60 helicopter to a 270 ft medium endurance cutter located at Location 2. seize blocks are used to seize either transport assets or assets performing specific processes such as inspection or boarding and control. This provides an added measure for tabulating the time required to perform a specific task. Expression elements and process blocks are used to calculate and report the travel time.

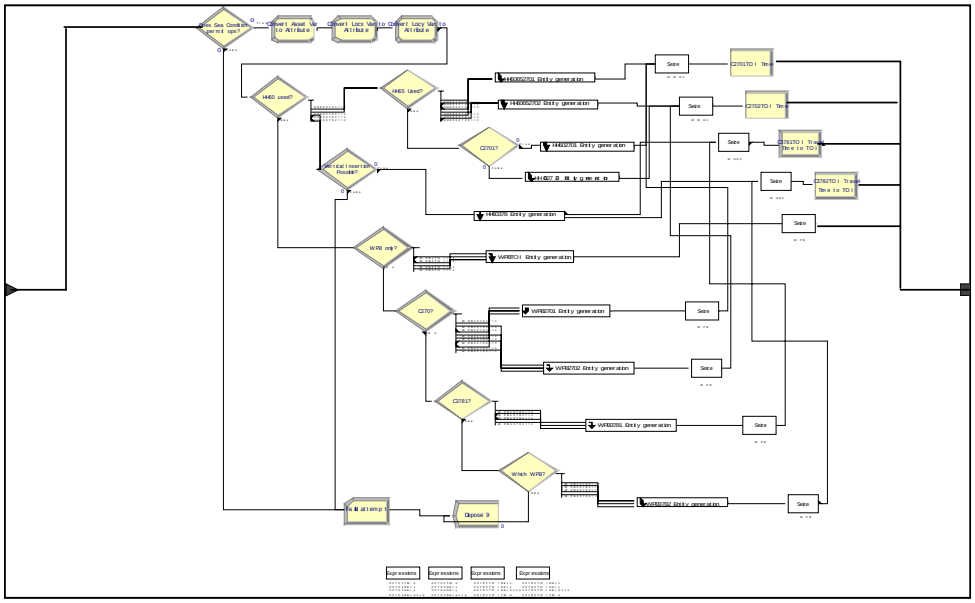

Figure 3-7: Team Transport Submodel

Control and Boarding Process

Once the team reaches the target (indicated with a batch module), the next process of controlling and boarding begins. This process is not an inspection team function, but necessary for the eventual inspection of the vessel. As discussed earlier, the control and boarding process is dependent on the compliance of the vessel crew with USCG authority. The time required to board and control a compliant crew has been modeled as Uniform with a range of 0.3 to 1 hours; for a non-compliant crew, it is modeled as Uniform with a range of 0.5 to 2 hours. Once control has been attained and access granted, the ship is searched for potential threats and the intent to harm. Included in this time is the checking of crew manifests and identification as well as documentation of the

vessel for safety and security concerns. This time is modeled as Uniform between 1 and 2 hours.

Inspection Process

Upon determination that the vessel is secure, the team begins the inspection process. Vessels, crew, and cargoes are targeted based on intelligence sources and can be specific in nature, i.e. container "x" on ship "y", or nonspecific, i.e. a container coming from Hong Kong. The specificity of the intelligence and the size of the inspection team, play a major role in how long the inspection process will take. Due to the lack of data to properly model the parameters affecting the time required to inspect a targeted vessel, specific and non-specific threats have been modeled as:

Non-Specific: UNIF(6,12)*2

Specific: UNIF(6,12)

Based on historical data, the measured time to inspect a vessel targeted by specific intelligence is between six and twelve hours. Once the inspection process is complete, the times are tallied and recorded and Arena saves the total time of the three processes which can then be retrieved by Matlab.

Asset Utilization Model

The operational usage model, also termed the competing mission model is found in Figure 3-8. This model has been embedded with the USCG interdiction model to add the realism of day to day operations and their impact of resource availability to perform the at-sea interdiction process. This model consists of the four Deepwater Strategic Goals (maritime safety, maritime security, protection of natural resources, and national defense) detailed in Table 3-2 earlier in this chapter.

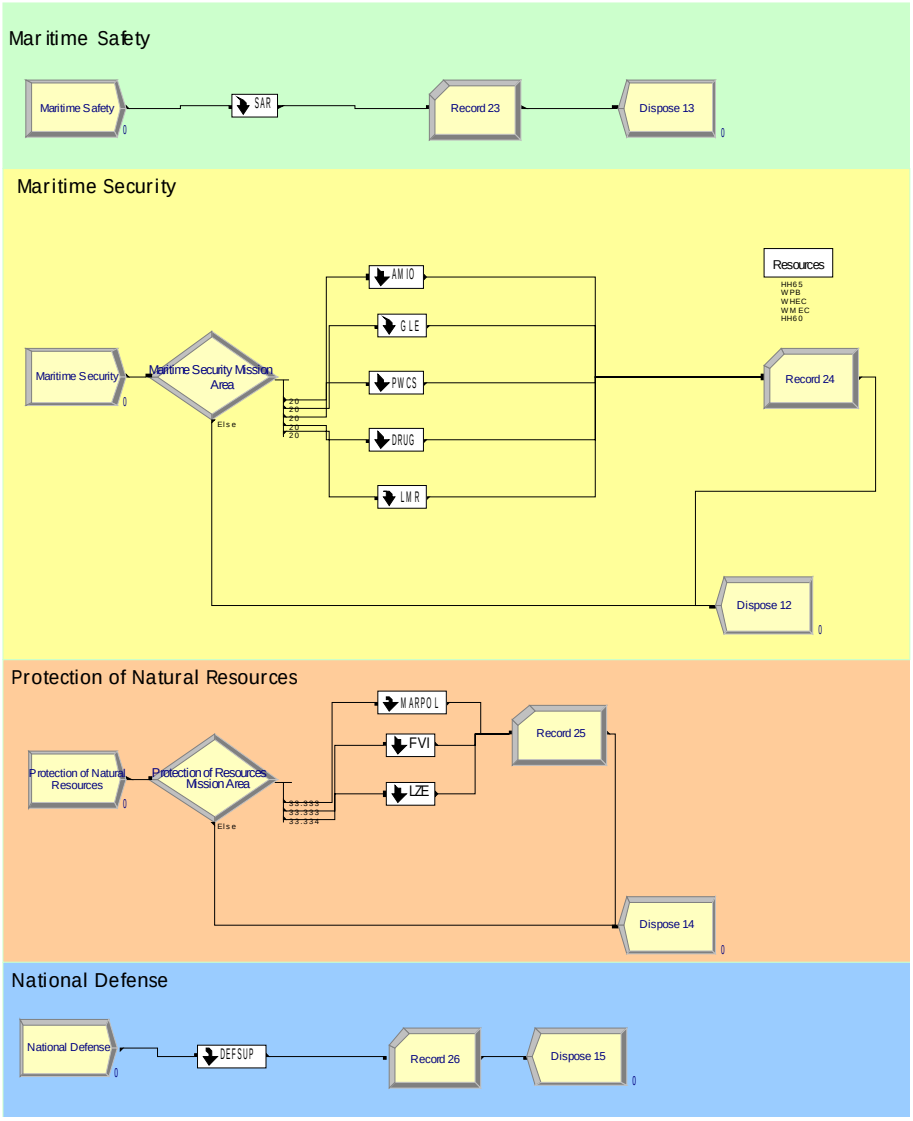

Figure 3-8: Operational Usage Model

Each goal is broken down into mission areas which are then broken down into the Deepwater assets performing those mission areas based on asset utilization rates found in Table 3-6. These rates are captured as percent utilization per day per mission averaged

over a year and modeled as an N-way percent chance using Decide Modules. Figure 3-9: SAR Submodel is a snapshot of the search and rescue (SAR) submodel. It provides a look into Deepwater asset usage for that particular mission. Snapshot of each submodel are provided in Appendix C. The output of the model is the utilization of assets similar to what would be expected in the true operational environment.

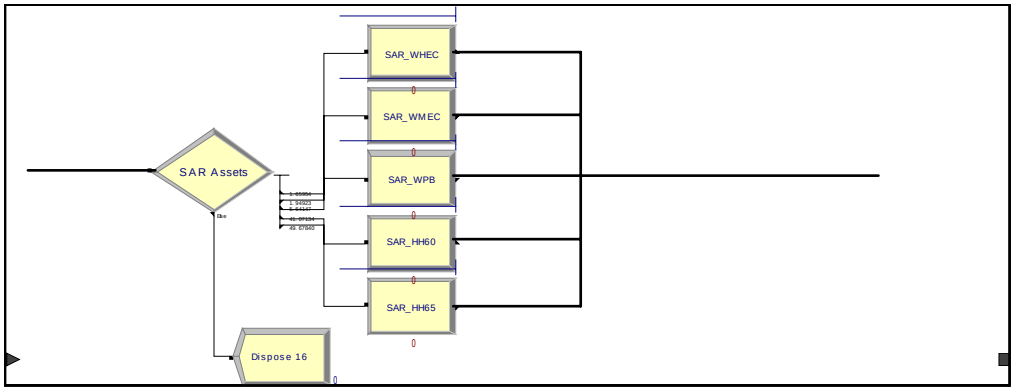

Figure 3-9: SAR Submodel

As both models run, they compete for resources, thereby allowing for assessment of the operational impact to current mission operations if at-sea inspections were to be added to the list of current USCG responsibilities.

<u>Asset Utilization Rates</u>

The following tables provide the percent usage per day per mission of the assets studied in this thesis. The percentages presented in the table, when implemented correctly in the model, will provide a realistic representation of the utilization rates of these assets in the operational environment.

Table 3-6: Deepwater Asset Percent Usage/Day/Mission Averaged over 2004

Deepwater Asset	SAR	AMIO	DRUG	PWCS	GLE
378' WHEC	0.0000338	0.0004071	0.0021892	0.0000029	0.0000175
270' WMEC	0.0000397	0.0005979	0.0016213	0.0000824	0.0000561
110' WPB	0.0001149	0.0009179	0.001244	0.0000077	0.0000975
HH60	0.0008365	0.0003136	0.0014506	0.0000887	0.0000035
HH65	0.0010118	0.0004757	0.0005754	0.0002877	0.0000132
Deepwater Asset	**LMR**	**DEF SUP**	**FVI**	**LZE**	**MARPOL**
378' WHEC	0.0000017	0.0000863	0.0000012	0.0000000	0.0000000
270' WMEC	0.0002376	0.0001025	0.0000000	0.0000009	0.0000014
110' WPB	0.0002555	0.0000950	0.0000018	0.0000049	0.0000004
HH60	0.0000207	0.0000089	0.0000089	0.0000000	0.0000089
HH65	0.0001127	0.0000114	0.0000497	0.0000000	0.0002020

3.4.2 *Optimization Component*

In this section, we describe the optimization approach for this research. We provide a description of how the heuristic works and the framing of the problem for implementation of this heuristic.

3.4.2.1 Simulation Optimization Interface

The simulation optimization component consists of a tabu search heuristic written in Matlab v. 7.1 language, which feeds the simulation model the asset parameters, asset type and location, and controls the operation of the simulation model. The simulation model applies the asset parameters to the simulation and returns an average time associated with these parameters back to the Matlab heuristic. A depiction of the interface between Matlab and Arena is presented in Figure 3-10.

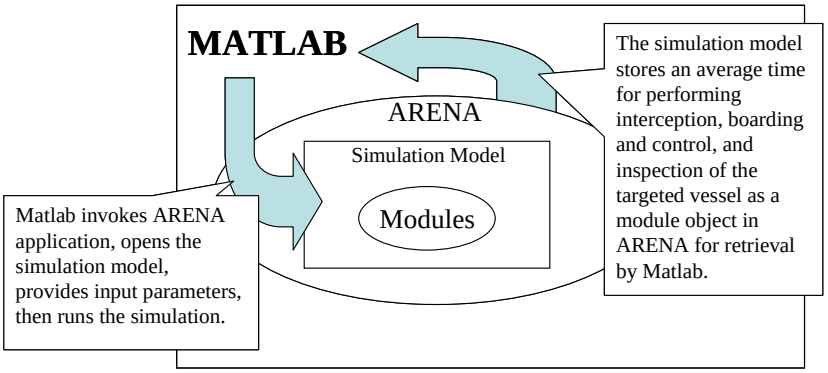

Figure 3-10: Coordination between Simulation and Matlab Heuristic

In this study, we have identified two types of conveyances that can be taken directly by the team either directly to the targeted vessel or to another USCG asset for interception of the targeted vessel—either the HH60 helicopter or the 110 ft. WPB patrol boat.

The code selects an asset set for evaluation by the simulation. The simulation returns a time which is retrieved by the code and compared to previous solutions. The tabu list within the code has a tenure of three, i.e. it keeps the last three visited solutions. If a solution set is repeated in the last three moves, it will still be processed by the simulation, but will not become tabu unless the aspiration criteria is met. The aspiration criteria allows a tabu move to be accepted if the time solution from the simulation improves the solution for that asset set. The stopping criteria is set to 25 iterations. The pseudo-code is provided in Figure 3-11. The tabu search code can be found in Appendix C. The next section provides an example of this simulation optimization technique.

```
Algorithm Tabu Search

Initialization
Initialize tabu list and aspiration level;
    Search Diversification
For one iteration Do
Randomly generate one neighborhood solution of interdicting assets;
        Neighborhood Search
        For one iteration Do
        Present solution to simulation model for processing;
        Receive initial objective function, Time, from model;
        Set Time as current solution;
        Replace one asset location for another in same neighborhood;
        Return solution to model for processing;
        Update neighborhood with new solution;
        If move from current solution to new solution is not tabu and an improved
        solution
        Then
            Accept move and update best solution;
            Update tabu list and aspiration criteria;
            Increment iteration number;
        Else if new solution is in tabu list
            If new Time is less than best time Then
                Accept move and update best solution;
                Update tabu list and aspiration criteria;
                Increment iteration number;
            EndIf
        EndIf
        Increment iteration number
        Stop when difference in new best solution is less than 0.25 hours
        End
```

Figure 3-11: Pseudo-Code for USCG Interdiction Problem

3.5. An Example

In this section, we present the first iteration as an example of the simulation optimization approach. The performance measure of interest is the total time in system. This measure includes the time required for the inspection team to reach transport, the time required for the transport to reach the target of interest (TOI), the time required to

achieve control of the vessel and crew, and finally the time required to perform the inspection. There are four possible locations from which the WPB can begin a mission. The HH60 starts from only one location. The 270 ft and 378 ft cutters are out patrolling and have been assigned random locations within a 400 x 800 nautical mile area; however, these locations are fixed for this example. Each asset and its location involved in the mission are designated by its name, the number of its location, and by any other asset assisting in the interdiction. For instance, WPB12702 indicates that a patrol boat from location one is transporting the inspection team to a 270 ft cutter at location two.

To begin the solution procedure, the tabu search (TS) algorithm is initiated to produce a random starting asset set. The set is then updated by the code so that it conforms to constraints on asset usage, i.e. based on the feasible paths presented in Figure 1. The code returns one feasible set of assets per iteration as a 1 x 28 row vector of binary numbers indicating the interdiction process. Figure 3 is an expanded diagram of Figure 1 and enumerates the possible paths. The feasible set is sent to the simulation model, which in turn outputs an average for total time in system. This solution is returned back to the code and compared with the best solution thus far. If it is an improved solution and its corresponding asset set is not located in the tabu list, it is then added to the list. If it is contained in the tabu list but is found to be a better solution than the current best, the aspiration criteria have been met and it becomes the new best solution. The tabu list is then updated. The procedure continues by swapping assets within a neighborhood until no further improvement of the solution is possible.

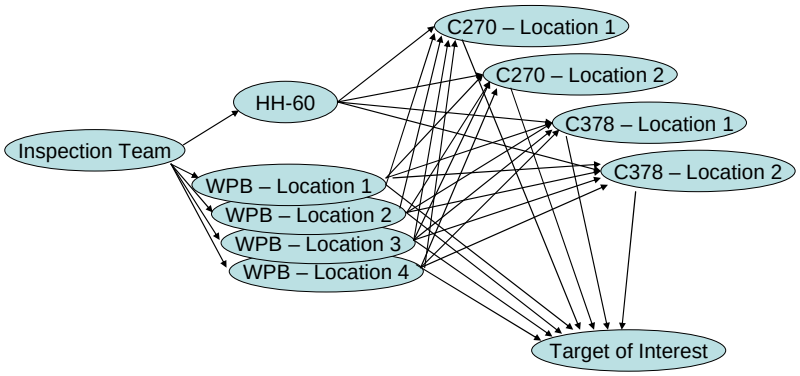

Figure 3-12: Network Diagram of Nodes in USCG Resource Allocation Problem

We have set a limit of five iterations as terminating criteria for a local neighborhood search not achieving improvement greater than 0.25 hours of the current best solution. The optimization is complete when the stopping criterion is met. The asset sets resulting from the first three iterations are presented in below.

Set #	Assets in Set	Total Time in System
Asset Set # 1	WPB from Location 2	27.19 hrs
	270' Cutter from Location 1	
Asset Set # 2	WPB from Location 3	15.97 hrs
	270' Cutter from Location 1	
Asset Set # 3	WPB from Location 3	15.85 hrs
	--	

Figure 3-13: Simulation Optimization Example of First Three Iterations of Search

From the table above, Asset Set # 3 provides the minimum total time in system thus far. This time will be the best current solution to which future solution(s) are compared.

3.6. Verification and Validation

In this section, we describe the verification and validation for this model. The reader should note that because the model was developed as a proof of concept for the interdiction process, the verification and validation of the system was performed with only subject matter expert guidance.

3.6.1 *Verification of Model Logic*

The system modeled in this research is highly conceptual in nature. Although at-sea inspections have taken place in the past, important aspects for modeling the system have not been considered until now. Collection of data to support the study of them is lacking. Furthermore, the specific data relating to at-sea boarding, such as the time required for a team of any given size to inspect a vessel of any given size, remains confidential under the current security posture of the United States.

The model logic presented in this thesis was reviewed for adequate translation from USCG CONOPS to simulation in the computerized environment. Outputs were reviewed for similarity to real interdiction missions.

3.6.2 *Model Validation*

Validation of the simulation model involves taking steps to ensure the model accurately represents the system or environment it is intended to represent. Model validation was performed on numerous occasions with a USCG subject matter expert (SME). Validation included review of process flow, arrival times of entities, process times for performing boarding and control and inspection of the vessel, the percentage of

specific versus nonspecific intelligence targeting, the percentage of compliant versus noncompliant crews, crew size, and team size determinations, to evaluate their legitimacy. Simulation results were consistent with anticipated system behavior. The simulation model has face validity.

3.7. Conclusion

In chapter three, we described the study environment from the area of study to the two components of the model, the simulation component and the optimization component. We explained how these two components function in order to move toward a near optimal solution. Further, we provided an example of how the simulation optimization is performed. Lastly, we discussed the verification and validation of the model. In the next chapter, we discuss the results of this study and provide an analysis for the reader..

4. Results and Analysis

4.1. Overview

In Chapter three, we presented the decomposition of the USCG resource allocation problem. We emphasized important structural considerations of the problem, i.e. attributes such as team size, sea condition, competing mission requirements, etc., and developed a discrete-event simulation model respective of these considerations. Further, we verified the model logic, validated its outputs, and then provided an optimization procedure using a tabu search algorithm to select feasible USCG asset strings.

In this chapter, we examine the results from the simulation optimization with a look at the measure of performance, total time in system, as well as resource utilization and potential strategies for implementing an at-sea interdiction process. Data is not readily available for a study of this kind, therefore any analysis of the quality of the results presented in this chapter have been performed, but should be considered suspect without validation using real system data or subject matter expertise.

4.2. Experimental Setup

Typically, in steady-state simulations, a check of initialization bias is performed to identify bias caused by unrealistic initial conditions. Figure 4-1 is a plot of the simulation average outputs for ten replication lengths: 0.5, 1, 1.5, 2, 2.5, 3, 3.5, 4, 4.5, and 5 years. Each was run for a total of 20 replications and times averaged. The graph suggests initialization bias is present up to 1.5 years. Subsequently, all experiments included a warm up of 1.5 years with a total run time of ten years.

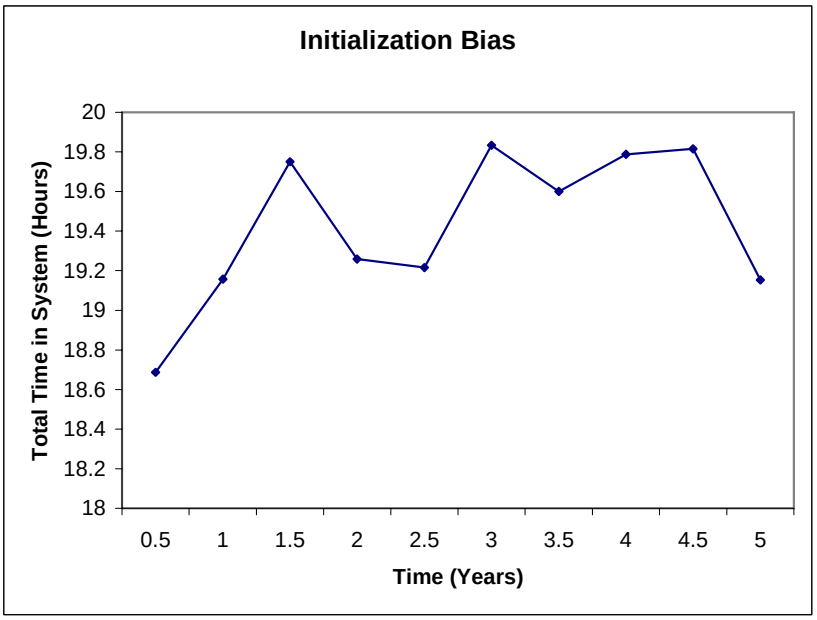

Figure 4-1: Initialization Bias

The replication number, R, was calculated based on 43 runs of 20 replications each for three half-length values (indicated as "H" below), 0.25, 0.5, and 1.0 hours, with a $t_{0.025,19}$ and a $t_{0.05,19}$. The mean was calculated to be 18.2168 with a standard deviation of 1.9081. A half-length of one hour with a confidence interval of 90 percent was selected for subsequent experiments.

Replication #	t(0.025,19)	t(0.05,19)
R (H = 0.25 hr)	253.4728032	173.2823
R (H = 0.5 hr)	63.36820081	43.32058
R (H = 1.0 hr)	15.8420502	10.83015

4.3. Experimentation Results

In this section, we present the results of the study. We first examine the performance measure, total time in system, which is composed of process times for the three processes: intercept time, boarding and control time, and inspect time. These results are applied along with results from the asset utilization study in the evaluation of three strategies for the USCG resource allocation problem.

4.3.1 *Performance Measure*

The following section addresses the performance measure of interest—the total time in system. This measure includes the time required for the inspection team to reach transport, the time to reach the target of interest (TOI), the time required to achieve control of the vessel and crew, and finally the time required to perform the inspection.

The tabu search code was run for 25 iterations of 20 replications each. Each replication was set to a length of ten years at 24 hours a day with a warm up period of 1.5 years for a replication length of ten years. Target creation was set to one per month and competing missions were set to one mission created per week per strategic goal. The system and statistics were initialized before each replication to ensure independence between replications.

The best solution for the total time in system was found to be 17.3143 hours. The corresponding USCG asset set is the HH60 with the 270 ft. medium endurance cutter from search area 1. The mean value for the total time in system is presented in Table 4-1. For a 95 percent confidence interval, the bounds on this time are [19.15,19.88]. The 95 percent prediction interval is [17.44, 21.60].

Table 4-1: Performance Measure Statistics

Mean	19.51822443
Standard Deviation	0.987813738
Upper Confidence Interval	19.88708013
Lower Confidence Interval	19.14936872
Upper Prediction Interval	21.59644932
Lower Prediction Interval	17.43999954

The best minimum time achieved was 17.3134; however, using a 95 percent confidence interval on the overall mean time indicates that the time will fall in the interval of [19.15, 19.88] for the values collected. The prediction interval on the total time in system suggests that there is a small amount of risk inherent in the expected value of the interdiction process. An important point to stress is that, because this system has not yet been implemented, these results can not be validated with any degree of certainty. They are provided only to demonstrate the utility of the model. In the next section, we analyze the utilization rates for the assets investigated in this research under typical mission needs and then use them to build potential USCG strategies for Deepwater resource allocations.

4.3.2 *Asset Utilization Rates*

In this section, we consider the system under the stress of different operations tempo (ops tempo). The feasibility of implementing the interdiction CONOPS and at what level depends on resource availability as other operations create demands on those resources. Three ops tempos were examined—low, medium, and high. Of the four mission areas, Maritime Safety, Maritime Security, Protection of Natural Resources, and

National Defense, a low ops tempo is considered to be one with roughly one mission created per week per mission area; a medium ops tempo is considered to be one with about three missions are created per week per mission area; a high ops tempo is considered in this study as the creation of one mission per day per mission area. While SAR and National Defense missions can last multiple days, the other missions were modeled at Uniform between four and eight hours. The simulation optimization was run for 25 iterations with 20 replications per run each a length of ten years at the following settings:

Table 4-2: Nine Scenarios for Asset Utilization Study

Low Threat - Low Ops Tempo	Low Threat - Med Ops Tempo	Low Threat - High Ops Tempo
Med Threat - Low Ops Tempo	Med Threat - Med Ops Tempo	Med Threat - High Ops Tempo
High Threat - Low Ops Tempo	High Threat - Med Ops Tempo	High Threat - High Ops Tempo

Table 4-3, Table 4-4, and Table 4-5 provide the results of the different resource utilization scenarios. Table 4-3 shows resource utilization under low threat interdiction conditions with low, medium, and high ops tempos. The average best time is 18.27 hours and the corresponding asset sets varied between sets with HH60, HH65, and 270 ft cutter and WPB only. The reader might notice that the data appears to have inconsistencies from one ops tempo to the next. This may be due to the random nature of the components within the simulation model, i.e. the competing missions that are generated. Either increasing the length or number of replications should take care of this, but will be left for future experimentation, with a higher fidelity model.

Table 4-3: Resource Utilization under Low Threat Interdiction Operations

Average Asset Utilization for Low Threat Interdiction Level			
	Low Ops Tempo	Medium Ops Tempo	High Ops Tempo
HH60	0.1401	0.1015	0.2170
HH65	0.0038	0.0086	0.0256
WPB Patrol Boat	0.2008	0.3463	0.1836
270 ft Cutter	0.1326	0.0777	0.3636
378 ft Cutter	0.2155	0.2335	0.3164

Table 4-4 shows the utilization rates under a medium threat interdiction level and low, medium, and high ops tempo. The 270 ft cutter is the most utilized asset in this case; however, the asset set that dominated the interdiction process is the asset set with only the patrol boat. The average time for interdiction for the three ops tempos at a medium level of interdiction is 19.46 hours.

Table 4-4: Resource Utilization under Medium Threat Interdiction Operations

Average Asset Utilization for Medium Threat Interdiction Level			
	Low Ops Tempo	Medium Ops Tempo	High Ops Tempo
HH60	0.0044	0.2081	0.3014
HH65	0.0038	0.0085	0.0258
WPB Patrol Boat	0.0043	0.0064	0.0222
270 ft Cutter	0.0403	0.2610	0.3638
378 ft Cutter	0.0317	0.2446	0.3122

Table 4-5 shows the utilization rates for high threat interdiction operations. 378 ft cutter usage almost doubled at medium and high ops tempo levels from the previous case.

At a low ops tempo, it appears that performing one interdiction per day will result in almost a two fold usage of assets when compared to medium interdiction operations. At medium and high ops tempo, we see that patrol boats and 378 ft. cutters, as in the previous results, are heavily used. The average minimum time to perform the interdiction is 20.69 hours and from the simulation optimization data, we find that the patrol boat with/without 378 ft cutter support, provides the best solution.

Table 4-5: Resource Utilization under High Threat Interdiction Operations

Average Asset Utilization for High Threat Interdiction Level			
	Low Ops Tempo	Medium Ops Tempo	High Ops Tempo
HH60	0.0044	0.0208	0.2982
HH65	0.0038	0.0085	0.0256
WPB Patrol Boat	0.4026	0.3831	0.4134
270 ft Cutter	0.4255	0.2628	0.3603
378 ft Cutter	0.4188	0.4344	0.6288

In the next section, we evaluate the potential strategies for resource allocation of USCG resources.

4.4. Evaluation of Strategies for USCG Resource Allocation

In the previous section we noted that the 378 ft cutter and WPB patrol boat are used heavily in most of the scenarios investigated. This indicates a possible bottleneck in mission completion due to lack of capability that these crucial assets provide. Another important observation is that ops tempo appears to be independent of interdiction

operations until ops tempo and the level of interdiction operations increases to a high level. Further investigation is required to gain insight into these results, but making the assumption that the model contains the right level abstracted information to assess this resource allocation problem, we have three recommended strategies for USCG resource allocation of Deepwater assets.

4.4.1 *Strategy 1: Increase Fleet and/or Locations of WPB patrol boats*

Recall the asset set that dominated the best solutions in the interdiction process was the set with the WPB patrol boat. This result could possibly be attributable to the variety of locations of the patrol boat and the fact that transport of the inspection team can be direct to the target of interest or via cutter support. Patrol boats are in large supply in the USCG and although, other concerns such as maintenance requirements were not investigated in this study, it appears that in the Deepwater environment (50 to 200 nautical miles from US coasts) patrol boats are fundamental to maintaining port security. While the idea of the importance of patrol boat allocation is supported by the fact that the current allocation of patrol boats is large compared to other surface assets, it can be argued that more locations and/or more of these assets may serve to enhance the overall level of interdiction operations. A closer examination of this result with a higher fidelity model is required.

4.4.2 *Strategy 2: Integrate Inspection Team with Deployed Cutters*

With a twist to strategy 1, strategy 2 suggests the integration of a fully functional inspection team deployed with each surface asset, to include WPB patrol boats. Fully functional is defined here as a team capable of inspecting for nuclear, biological, and

chemical hazards. This addition would give the patrol boat platform all necessary capability to perform the three processes of interception, control and boarding, and inspection, as well other missions currently on task. This strategy could be implemented without a requirement to purchase more assets, but may present a need for better technological advancements of inspection equipment and/or more personnel to perform inspections.

4.4.3 *Strategy 3: Develop Asset-Specific CONOPS*

A growing concept in the Department of Defense is the idea of capabilities-based acquisition. The point is to determine the necessary capability and then build the system to meet it as opposed to past acquisition practices where the system was designed first and then the capability was implemented. For example, suppose you had a requirement to destroy enemy surface-to-air missile (SAM) sites. Capabilities based thinking transforms this requirement from a rigid concept of how to meet the requirement, i.e. bomb it, to something that can be achieved through a variety of alternatives. The requirement then becomes: eliminate the effectiveness of enemy surface-to-air missile (SAM) sites. This opens up the door to other ways of achieving this objective—through kinetic effects or perhaps electromagnetic effects to achieve the same goal: eliminate the effectiveness of the SAM site.

Similarly, strategy 3 involves assessing the capabilities of under-utilized assets and deriving new ways of implementing their capabilities to support missions that are consuming the time of heavily used assets. Recall that based on this model, the HH60 and HH65 assets appear to be under utilized. While this result requires more scrutiny, it

identifies the potential for using these assets in other mission areas in order to relieve the heavily used assets from the current resource strain. This idea requires more consideration, but can offer insight into how to achieve flexibility in meeting mission needs.

4.5. Conclusion

In this chapter, we presented experimental results for our measure of performance, total time in system, and analyzed asset utilization rates for various scenarios. We then applied these results to come up with three potential strategies for enhancing the USCG role in port security. Specifically, we found that the WPB patrol boat is fundamental to meeting the interdiction mission in the Deepwater environment. We used this information to develop strategy 1, an increase in patrol boats or locations of patrol boats, to meet the needs of the interdiction mission. We also suggested adding function to each surface asset to reduce the amount of time required to get the inspections underway and recommended changes to doctrine to handle a broader range of missions with the under-utilized assets. In the next chapter, our results are summarized and future work is presented to enhance this model and address other military applications.

5. Conclusion and Future Work

This study began with a desire to capture a perspective of port security and apply a simulation optimization methodology to solve it. Collaboration with the United States Coast Guard shifted our view to the fertile research area of the at-sea interdiction process composed of the three processes: interception, control and boarding, and inspection of a targeted vessel. We built a tabu search metaheuristic, established an automated interface between Matlab and Arena, and demonstrated the simulation optimization methodology can be applied to problem in maritime security. From these developments, we were able to experiment on a system that doesn't yet exist and provide feedback to the USCG on resource allocation strategies.

5.1. Simulation Optimization

In this study, we developed a simulation optimization approach for assessing the resource allocation of USCG Deepwater assets using a tabu search metaheuristic interfaced with a discrete-event simulation model. We demonstrated this method on a USCG resource allocation problem. The results of this demonstration are presented in the following section.

5.2. Summary of Findings

Specifically, we found that the best total time to perform the interdiction process we could achieve, with consideration to the adequacy of the model, is 17.3143 hours. We found that the corresponding asset set for this time is the HH60, 270 ft cutter combination.

We looked at utilization rates of nine different scenarios involving low, medium, and high interdiction operation levels over low, medium, and high ops tempos and found that the asset sets that dominated each set of scenarios were those that contained the WPB patrol in the solution set. This led us to the conclusion that WPB patrol boats are fundamental to the performance of interdiction operations in the Deepwater environment. We funneled these observations into three strategies for meeting the obligations of the interdiction CONOPS while maintaining the current mission workload.

1. Increase the fleet and/or location of WPB patrol boats
2. Integrate the inspection teams with surface assets
3. Develop asset-specific concept of operations

We believe that depending on the fluctuating resource constraints experienced by all branches of the Department of Defense, these strategies offer a range of alternatives and are implementable considering the nature of defense funding. We do stress that more research using a higher fidelity model is warranted, but attainment of this model would be driven by the need for more data.

5.3. Applicability

The applicability of this model, first and foremost, is as a simulation optimization tool for linking Matlab to Arena. This is extended to USCG resource allocations of Deepwater assets as a tactical measurement of impact to other mission areas as the number of interdiction operations is increased. The model investigates resource bottlenecks and can be used to determine appropriate resource allocations for meeting all Deepwater missions. Furthermore, the simulation optimization approach developed in

this study is demonstrated on the USCG 7th district assets, but is general enough to be applied to address a larger asset allocation problem.

5.4. Recommendations for Future Research

The focus on port security is only just beginning which makes this topic abundant in possible future research. Furthermore, the study of military operations, such as the USCG interdiction CONOPS, has a profound relationship with the application of heuristics and most definitely with simulation. These topics truly are endless in their possibilities, so only three avenues of future research are presented in the next section for thought.

5.4.1 *Model Enhancements*

The interdiction process addressed in this thesis has not been studied extensively; therefore very little data exists to model this process to a finer level of detail. Data requirements, in order to achieve a greater fidelity, would include threat arrival rates, times associated with different aspects of the boarding and control process (i.e. checking for signs of immediate danger and identifying crew members, times associated with inspection of various types, sizes, and specificities of vessel threats. Using response surface methodology coupled with the provision of data for the processes modeled in this thesis, one could build objective functions that accurately represent the significant input parameters that make up the travel time, boarding and control, and inspection processes. This would provide a better understanding of the relationship between, for instance, the size of a vessel and how long it would take to inspect. This area could be further developed in the port-centric environment, where screening processes need to be

efficient. Related to this suggestion is the application of decision analysis to more appropriately model the priorities of USCG missions. This could be further expanded to look at risk postures at US ports. One possible means to gathering this type of data is during training exercises.

5.4.2 *Agent-Based Simulation*

We live in a dynamic world. One of the drawbacks of monte-carlo simulation is the inability to model those dynamics. When studying a system that involves human decision making, it becomes more evident that simulation of such a system should be as flexible as the human thought that goes into the actual system. An enhancement to studying port security would be to develop a model using agent-based simulation software. While artificial intelligence is still a work in progress, there is something to be gained in modeling a system where actions of players in the system can be described by rules of engagement and can develop strategic thinking within the simulation. This type of modeling may allow for identifying vulnerabilities in the system based on how the players react to different deterrence measures. Specifically, modeling the intentions of a terrorist at a port through agent based simulation, might open up security officials to a different way of viewing security.

5.4.3 *Military Applications*

Another area of study to enhance USCG mission success is the optimization of USCG cutter search areas using updateable location and heading parameters. Cutters move in a defined pattern to reduce the chance of missing a potential security threat. A question to ask is: “Is there a more optimal path that can assure the cutter has performed

a more complete search?" Establishing probabilities associated with locating a target in a particular search area could be beneficial to reducing wasted search time in areas where targets may have a low probability of being located. This problem may be easily handled as a stochastic traveling salesman problem (TSP).

5.5. Summary

In a post-9/11 reality, the US recognizes the need to identify any and all potential threats to national security and to implement measures to enhance that level of security where necessary. In a study of vulnerabilities of the border and transportation system, the 9/11 Commission report acknowledged the need of US ports for more security. Further study of the problem revealed the it's immensity calls for an approach with multiple-layers of security such that the breakdown of any one layer would not force the complete breach of US national security or collapse of the US economy. We addressed the interdiction layer of this multiple layer approach in the hopes of applying the principles of operations research to evaluate a USCG concept of operations. This work is part of a beginning in the application of simulation optimization in the port security environment.

Appendix A: List of Acronyms

AMIO	Alien Migrant Interdiction Operations
BTS	Border and Transportation Security
CBP	Customs and Border Protection
CSCO	Coastal Sea Control Operations
CSI	Container Security Initiative
C-TPAT	Customs-Trade Partnership against Terrorism
DHS	Department of Homeland Security
DMOES	Deepwater Maritime Operational Effectiveness Simulation
DRUG	Drug Interdiction
FMC	Federal Maritime Commission
FSMP	Flow-Shop with Multiple Processors
FVI	Foreign Vessel Inspection
GDO	General Defense Operations
GLE	General Law Enforcement
ICE	Immigration and Customs Enforcement
IDS	Integrated Deepwater System
IIP	International Ice Patrol
IMO	International Maritime Organization
ISPS	International Ship and Port Facility Security
LMR	Living Marine Resource Enforcement
LZE	Lightering Zone Enforcement
MARPOL	Maritime Pollution Enforcement and Response
MERO	Military Environmental Response Operations
MHLS	Maritime Homeland Security
MIO	Maritime Intercept Operations
MSC	Maritime Safety Committee
NP	Nondeterministic Polynomial
OECD	Organisation for Economic Co-operation and Development
OSC	Operation Safe Commerce
PME	Peacetime Military Engagement
POSD	Port Operations Security and Defense
PWCS	Ports, Waterways, and Coastal Security
SAR	Search and Rescue
SOLAS	Safety of Life at Sea
TEU	Twenty-Foot Equivalent Unit
TOI	Target of Interest
USCG	United States Coast Guard
VAR	Value at Risk
WHEC	High Endurance Cutter

Appendix B: USCG Study Assets

270 ft Medium Endurance Cutter (WMEC)

378 ft High Endurance Cutter (WHEC)

HH-60 Jayhawk

110 ft WPB Patrol Boat

HH-65 Dolphin

Appendix C: Matlab Code

```
%%%
```

```
%%%%%%%%%%%%%%%%%%MAIN LOOP%%%%%%%%%%%%%%%%%%%%%
for w = 1:25                                    %Stopping Criteria: 25 Iterations
   o = rand(1);
   t = o*2;
   s = ceil(t);
   I = eye(8);
   Loc1 = [140,497;211,651;136,720;145,772;rand*422,rand*158;...
   rand*158+264,rand*592+197;rand*158+264,rand*592+197;rand*422,rand*158];
   Loc2 = [211,789;211,158;264,197;140,497;rand*422,rand*158;...
   rand*158+264,rand*592+197;rand*158+264,rand*592+197;rand*422,rand*158];
%%%%%%%%%%%%HH60 NEIGHBORHOOD CONSTRUCTION%%%%%%%%%%
   if s == 1
      x = ceil(rand*4);
      y = ceil(rand*2 + 6);
      z = ceil(rand*2+4);
      A = I(:,1);
      u = rand;
      v = rand;
      if x == 1
         if u > 0.5
            B = A + I(:,y);
         end
         if v > 0.5
            B = A + I(:,z);
         end
      end
      if x == 2 | x == 3| x==4
         B = A + I(:,x)+I(:,z);
      end
      Locx = B.*Loc1(:,1);
      Locy = B.*Loc1(:,2);
   end
```

```
%%%%%%%%%%%WPB NEIGHBORHOOD CONSTRUCTION%%%%%%%%%
   if s == 2                                  %WPB Neighborhood
      u = rand;
      x = ceil(rand*4);
      y = ceil(rand*4+4);
      if u > 0.5
         B = I(:,x) + I(:,y);
      else
         B = I(:,x);
      end
      Locx = B.*Loc2(:,1);
      Locy = B.*Loc2(:,2);
   end
   assetsets(B,Locx,Locy,arnaModules);
   SortTimes = sort(TimeSoln,1);
   Best = SortTimes(1:3);
   Time = runarena(mymodel,arna);         %Retrieve Time value from Arena
   mymodel.End;
   TimeSoln = [TimeSoln;Time];
   Bset = [Bset;B'];
   if w==1 | w==2 | w==3
      Tabu = [Tabu;Bset(w,:)];                  %Tabu tenure set to 3
   else
      for m = 1:3
         if B~=Bset(w-m)                        %Checks new asset set against tabu list
            B = Bset(w-m);      %If set has not been visited in last 3
         end                    %moves, add to list
         Tabu = [Tabu;Bset(w-m,:)];
      end
   end
   disp(Tabu)
   AllSoln = [AllSoln;w,s,Time,B'];
end
```

FUNCTIONS

```
%%%%%%%%%%%%%%SEND ASSET SETS TO ARENA%%%%%%%
   function assetsets(B,Locx,Locy,arnaModules)
      idx = arnaModules.Find(1,'object.10725');   %Asset set
      Assets = arnaModules.Item(idx);
      for p = 1:8
         set(Assets,'Data',['Initial Value(',num2str(p),')'],B(p));
         get(Assets,'Data',['Initial Value(',num2str(p),')']);
      end
      idx = arnaModules.Find(1,'object.10964');   %Locationx
      Locationx = arnaModules.Item(idx);
      for p = 1:8
         set(Locationx,'Data',['Initial Value(',num2str(p),')'],Locx(p));
         get(Locationx,'Data',['Initial Value(',num2str(p),')']);
      end
      idx = arnaModules.Find(1,'object.11024');   %Locationy
      Locationy = arnaModules.Item(idx);
      for p = 1:8
         set(Locationy,'Data',['Initial Value(',num2str(p),')'],Locy(p));
         get(Locationy,'Data',['Initial Value(',num2str(p),')']);
      end
      return
   end
%%%%%%%%%%%%%%RUN MODEL GET TIME%%%%%%%%%%%
   function [Time] = runarena(mymodel,arna)
      mymodel.Go;
      sout = arna.activemodel.siman;
      total = sout.OutputStatisticsMaximum
      for i = 1:total
         strname = sout.ConstructString(12, i, 0);
         if strncmp(strname,'TotalTimeAvg',12) == 1
            Time = sout.OutputStatisticValue(i);
            i = total + 1;
         end
      end
      return
   end
end
```

Appendix D: Simulation Model

Interdiction Model

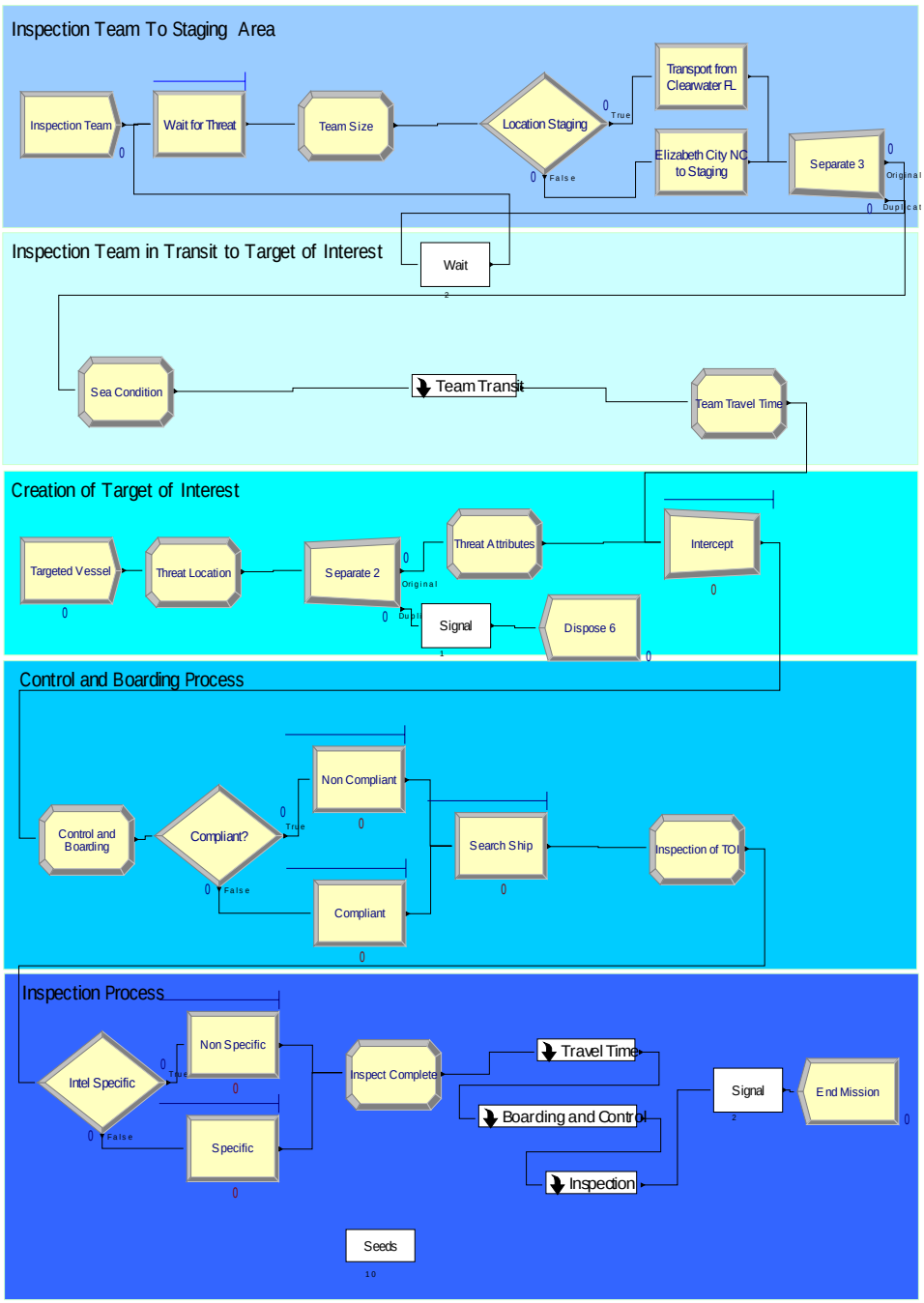

Team Transit Submodel

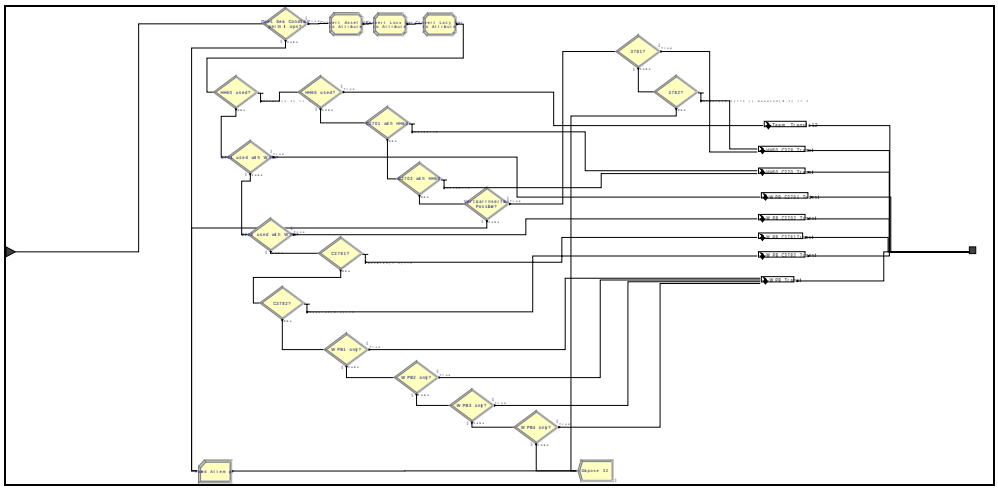

Operational Usage Model

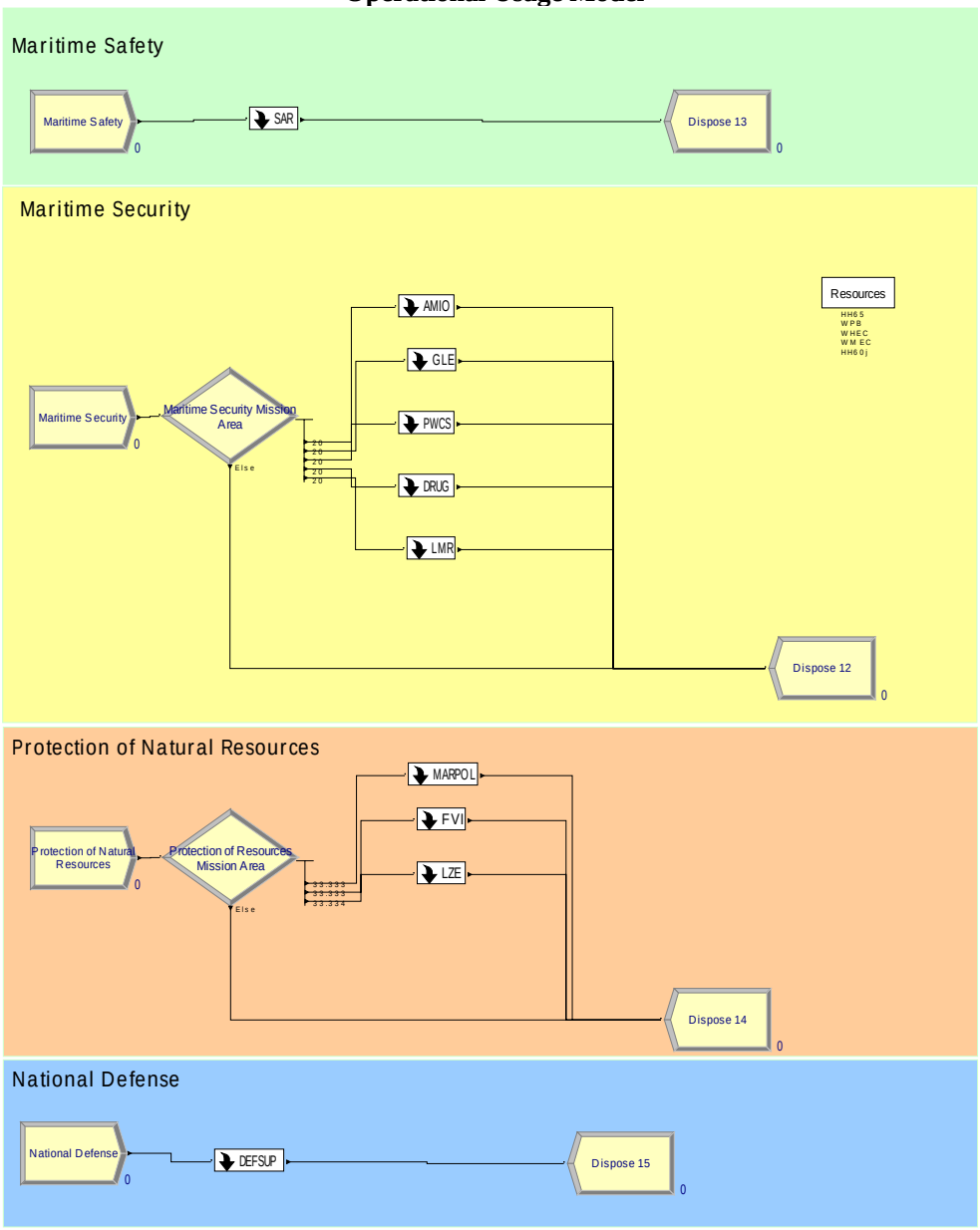

Operational Usage Model Decomposition

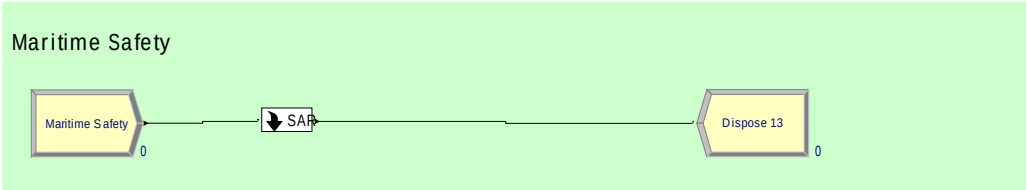

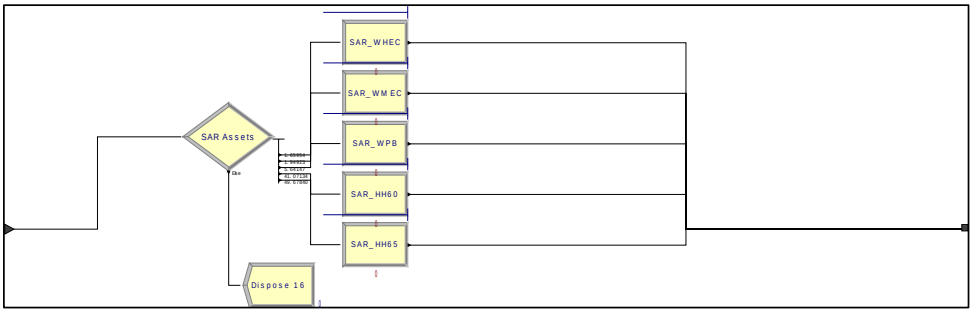

Alien Migrant Interdiction Operations Submodel

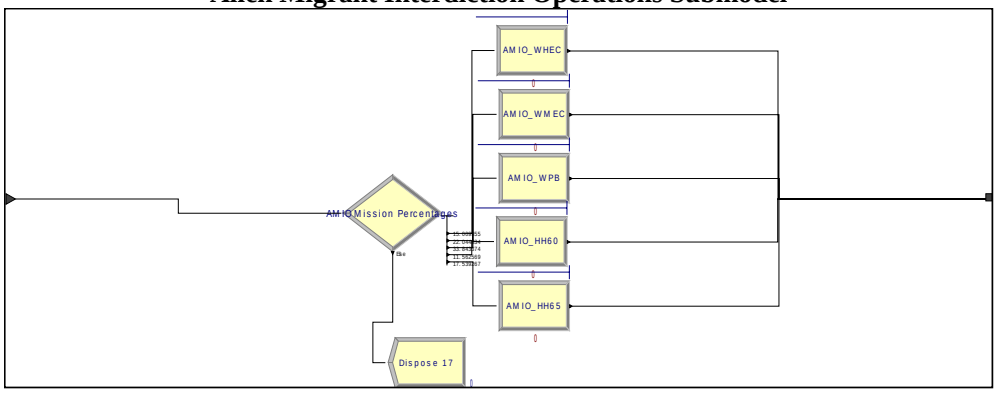

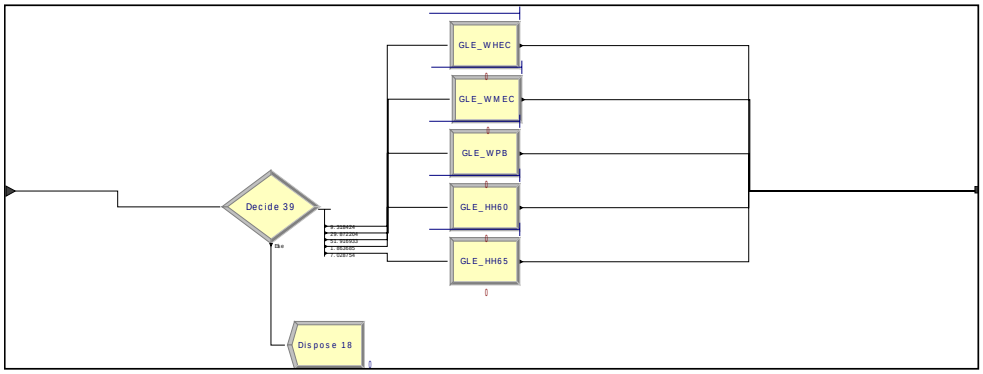

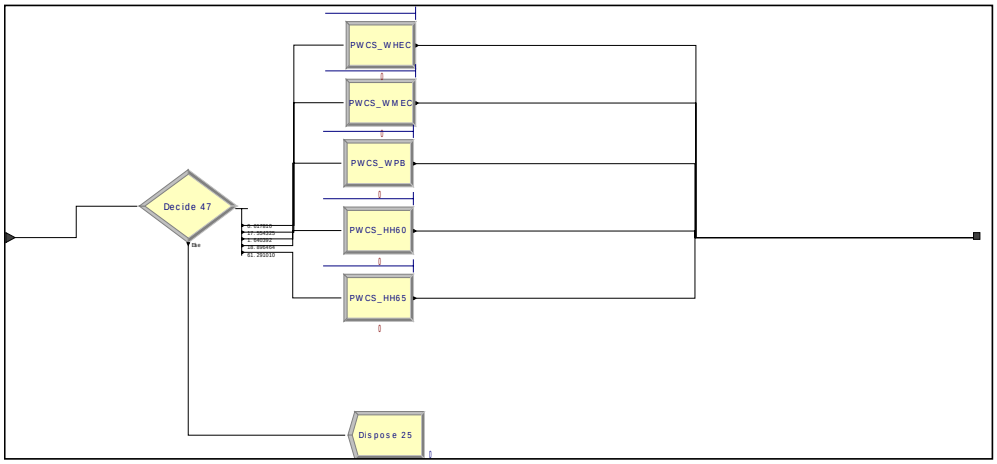
PWCS_WHEC
PWCS_WMEC
PWCS_WPB
PWCS_HH60
PWCS_HH65
Decide 47
Else
Dispose 25

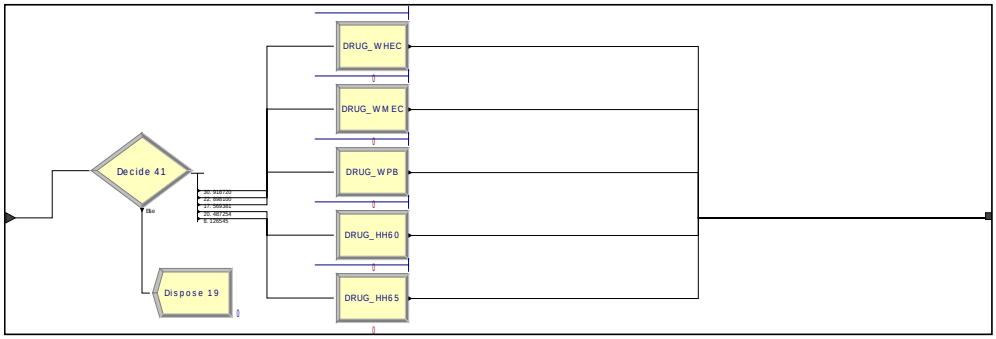
DRUG_WHEC
DRUG_WMEC
DRUG_WPB
DRUG_HH60
DRUG_HH65
Decide 41
Else
Dispose 19

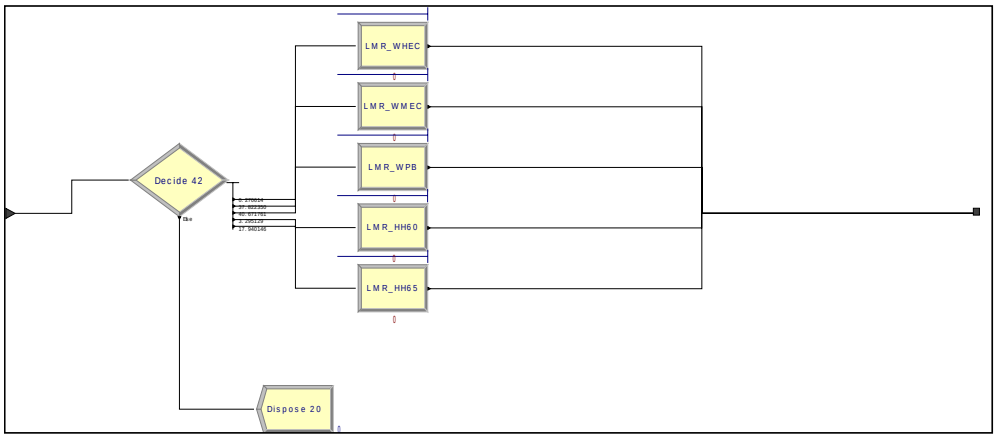
LMR_WHEC
LMR_WMEC
LMR_WPB
LMR_HH60
LMR_HH65
Decide 42
Else
Dispose 20

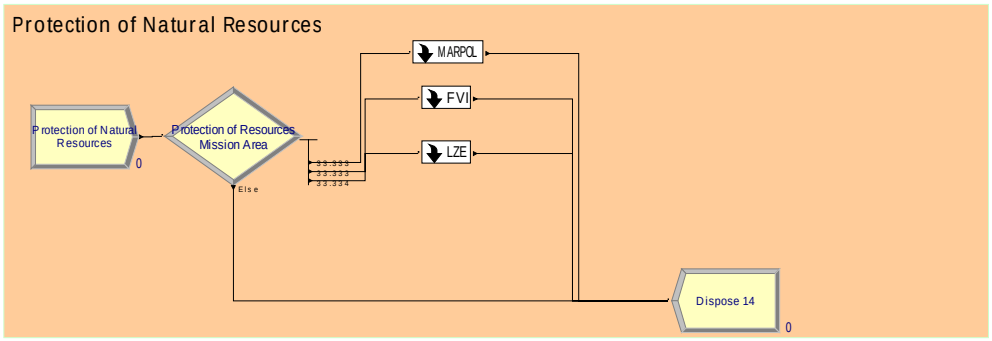
Protection of Natural Resources
Protection of Natural Resources
0
Protection of Resources Mission Area
Else
33.333
33.333
33.334
MARPOL
FVI
LZE
Dispose 14
0

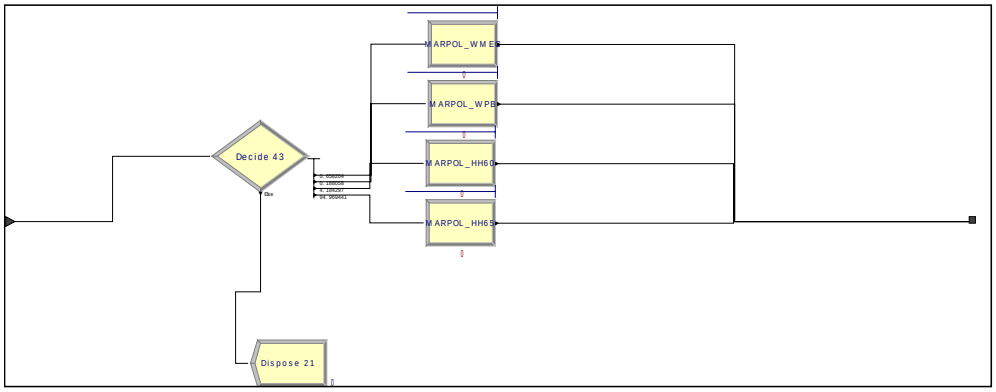
Decide 43
Else
MARPOL_WMEC
MARPOL_WPB
MARPOL_HH60
MARPOL_HH65
Dispose 21

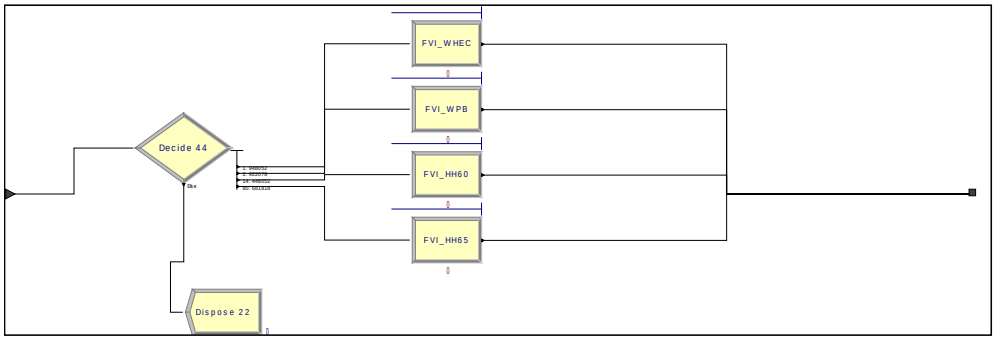
Decide 44
Else
FVI_WHEC
FVI_WPB
FVI_HH60
FVI_HH65
Dispose 22

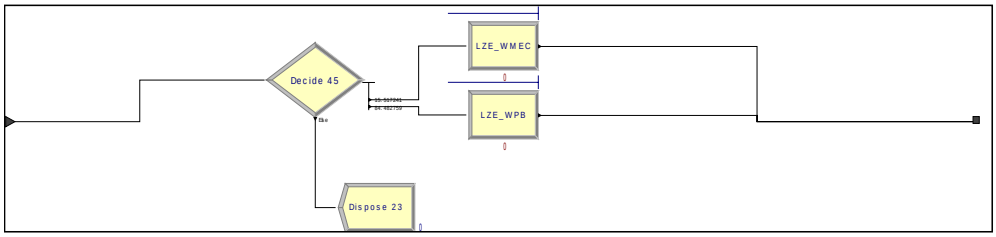
Decide 45
Else
LZE_WMEC
LZE_WPB
Dispose 23

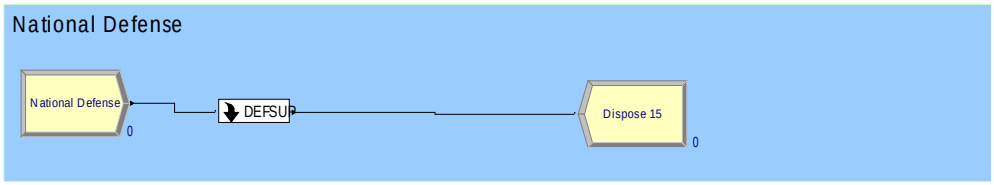
National Defense
National Defense
0
DEFSUP
Dispose 15
0

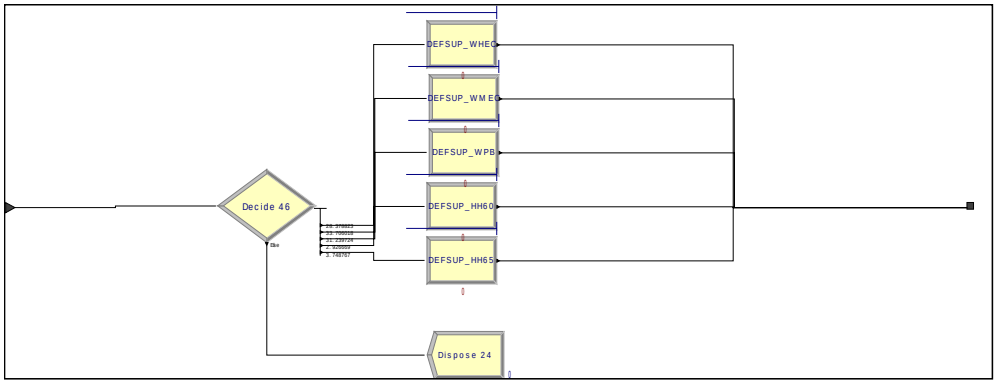
DEFSUP_WHEO
DEFSUP_WMEO
DEFSUP_WPB
DEFSUP_HH60
DEFSUP_HH65
Decide 46
Dispose 24

Bibliography

Deleted: Wikipedia. "Taxicab Geometry." n. pag. http://en.wikipedia.org/wiki/Taxicab_geometry. 27 November 06.

1. The 9/11 Commission Report, 2002.
2. April, J., F. Glover and J. Kelly (2004) "New Advances and Applications for Marrying Simulation and Optimization," Proceedings of the 2004 Winter Simulation Conference, Ingalls, Rossetti, Smith, and Peters, eds., pp. 80-86, Piscataway, New Jersey: Institute of Electrical and Electronics Engineers.
3. April, J., F. Glover, J.P. Kelly, and M. Laguna (2003), Practical introduction to simulation optimization.
4. Babul, M.J. "No silver bullet": Managing the ways and means of container security. 2006.
5. Bailey, M., R. Dell, and K. Glazebrook (1994), "Simulation-Based Dynamic Optimization: Planning United States Coast Guard Law Enforcement Patrols," Proc. of the Winter Simulation Conference, 392-398.
6. Ballis, A. Container terminal simulation model with animation capabilities. Journal of Advanced Transportation 1996; 30: 37.
7. Boeing 777 from http://www.boeing.com/commercial/777family/pf/pf_computing.html
8. Calhoun, K.M. *A tabu search for scheduling and rescheduling combat aircraft*. Master's thesis, Air Force Institute of Technology, 2000.
9. Capehart, S.R. *A tabu search metaheuristic for the air refueling tanker assignment problem*. Master's thesis, Air Force Institute of Technology, 2000.
10. Chung Y, S.U. Randhawa, and E.D. McDowell. Simulation analysis for a transtainer-based container handling facility. Computers & Industrial Engineering 1988; 14: 113.
11. Combs, T.E. *A combined adaptive tabu search and set partitioning approach for the crew scheduling problem with an air tanker crew application*. Master's thesis, Air Force Institute of Technology, 2002.
12. Cordeau, J., Laporte, G., Legato, P., and Moccia, L., 2005, "Models and Tabu Search Heuristics for the Berth Allocation Problem," Transportation Science, 39: 526.
13. Crino, J.R. *A group theoretic tabu search methodology for solving the theater distribution vehicle routing and scheduling problem*. Master's thesis, Air Force Institute of Technology, 2002.
14. Cullenbine, C.A. *A tabu search approach to the weapons assignment model*. Master's thesis, Air Force Institute of Technology, 2000.
15. Deepwater Sponsors' Representative Office (G-OCD), USCG Headquarters. Coast guard screening for vessels, cargo & people, "methodologies and processes looking at a way ahead". 2006.

16. Frittelli, J., 2005, "Port and Maritime Security: Background and Issues for Congress," Congressional Research Service, RL31733.
17. Gan D, Zhihua Q, and Cai H. Large-scale var optimization and planning by tabu search. Electric Power Systems Research 1996/12; 39: 195-204.
18. Glover, F. and Laguna, M., 1997, Tabu Search, Kluwer, MA.
19. Glover F., 1989, "Tabu Search—Part I,"ORSA Journal on Computing, 1(3): 190-206.
20. Glover, F., 1990, "Tabu Search—Part II," ORSA Journal on Computing, 2(1):4-32.
21. Greene L., 2005, "U.S. Coast Guard Reorganization: Why Merging the Field Units is not Enough to Remain *Semper Paratus* (always ready)," M.A. Thesis, Naval Postgraduate School, Monterey, CA.
22. Heuristics background from http://www.interaction-design.org/encyclopedia/heuristics_and_heuristic_evaluation.html http://en.wikipedia.org/wiki/Heuristics
23. Integrated Deepwater System Program, from http://www.uscg.mil/deepwater/program
24. Kinney, Jr., G. W. *A hybrid jump search and tabu search metaheuristic for the unmanned aerial vehicle (UAV) routing problem*. Master's thesis, Air Force Institute of Technology, 2000.
25. Lake, J.E., W.H. Robinson, and L.M. Seghetti, 2005, "Border and transportation security: The complexity of the challenge" Congressional Research Service, RL32839.
26. Office of Statistical and Economic Analysis. Vessel calls at U.S. and world ports 2005. 2006; .
27. Parola, F. and A. Sciomachen, Intermodal container flows in a port system network: Analysis of possible growths via simulation models. International Journal of Production Economics 2005; 97: 75.
28. Patrick J. Ryan, LCDR James Passarelli, and Michael Migdail-Smith. Application of campaign+ level modeling using DMOES for coast guard force planning. 2003. Retrieved 10/9/2006, 2006, from www.msi-ct.com/News/Application%20of%20Campaign%20Level%20Modeling%20using%20DMOES%20-%20Informs20031.ppt
29. Robinson, W, J. Lake, and L. Seghetti, 2005, "Border and Transportation Security: Possible New Directions and Policy Options," Congressional Research Service, RL32840.
30. Sait, S. and Youssef, H., 1999, Iterative Computer Algorithms with Applications in Engineering: Solving Combinatorial Optimization Problems, Burgess, Angela, Picataway, New Jersey.

31. Seghetti. L.M., J.E. Lake, and W.H. Robinson, 2005, “Border and transportation security: Selected programs and policies,” Congressional Research Service, RL32840.
32. Shabayek, A.A. and W.W. Yeung, A simulation model for the kwai chung container terminals in hong kong. European Journal of Operational Research 2002; 140.
33. Sharpe J., B. Tawney, J. White, and K. Preston (2005) Simulation and analysis of the inspection process of cargo containers. Proceedings of the Systems and Information Engineering Design Symposium
34. Smith J. (1976) “A Simulation of U.S. Coast Guard Response to Demands for Service,” Proc. of the Winter Simulation Conference, December 6-8, 199-209.
35. Tekelioglu, U.H. *Reactive tabu search metaheuristic extension of the air refueling tanker assignment problem*. Master’s thesis, Air Force Institute of Technology, 2001.
36. Tugcu, S. (1983) A simulation study on the determination of the best investment plan for Istanbul seaport. *Journal of the Operational Research Society* 34(6): 479-487.
37. United States Coast Guard, 2002, “United States Coast Guard Integrated Deepwater System Program Modeled Concept of Operations for Coast Guard Deepwater Assets.
38. United States Coast Guard. United States Coast Guard Integrated Deepwater System Modeling and Simulation Master Plan, 2006.
39. United States Coast Guard. United States Coast Guard Integrated Deepwater System Program Modeled Concept of Operations for Coast Guard Deepwater Assets. 2002.
40. Valentin, E.C., S. Steijaert, R.A. Bijlsma, and P. Silva (2005) “Approach for modeling of large maritime infrastructure systems.” Proceedings of the Winter Simulation Conference, Proc. of the Winter Simulation Conference, Institute of Electrical and Electronics Engineers, Piscataway, New Jersey, 1577.
41. Van de Voort, M. and K.A. O'Brien (2003) Seacurity: Improving the security of the global sea-container shipping system.
42. van Rensburg, J., Y. He, and A. Kleywegt (2005) “A Computer Simulation Model of Container Movement by Sea,” Proc. of the Winter Simulation Conference, Institute of Electrical and Electronics Engineers, Piscataway, New Jersey, 1559-1565.
43. Vessel Data from http://www.solentwaters.co.uk/Vessel%20Types/
44. Willis, H. and D. Ortiz (2004) Evaluating the security of the global containerized supply chain.
45. Yang, T., Y. Kuo, I. Chang (2004) Tabu-search simulation optimization approach for flow-shop scheduling with multiple processors - A case study. *International Journal of Production Research* 42(19): 4015-4030.

REPORT DOCUMENTATION PAGE

Form Approved
OMB No. 074-0188

The public reporting burden for this collection of information is estimated to average 1 hour per response, including the time for reviewing instructions, searching existing data sources, gathering and maintaining the data needed, and completing and reviewing the collection of information. Send comments regarding this burden estimate or any other aspect of the collection of information, including suggestions for reducing this burden to Department of Defense, Washington Headquarters Services, Directorate for Information Operations and Reports (0704-0188), 1215 Jefferson Davis Highway, Suite 1204, Arlington, VA 22202-4302. Respondents should be aware that notwithstanding any other provision of law, no person shall be subject to a penalty for failing to comply with a collection of information if it does not display a currently valid OMB control number.
PLEASE DO NOT RETURN YOUR FORM TO THE ABOVE ADDRESS.

1. REPORT DATE *(DD-MM-YYYY)*	2. REPORT TYPE	3. DATES COVERED *(From – To)*
22-03-2007	**Master's Thesis**	Sep 2006 - Mar 2007

4. TITLE AND SUBTITLE
Analyzing the Interdiction of Sea-Borne Threats Using Simulation Optimization

5a. CONTRACT NUMBER

5b. GRANT NUMBER

5c. PROGRAM ELEMENT NUMBER

6. AUTHOR(S)

Cavallaro, Kristen L., Captain, USAF

5d. PROJECT NUMBER

5e. TASK NUMBER

5f. WORK UNIT NUMBER

7. PERFORMING ORGANIZATION NAMES(S) AND ADDRESS(S)
Air Force Institute of Technology
Graduate School of Engineering and Management (AFIT/EN)
2950 Hobson Street, Building 642
WPAFB OH 45433-7765

8. PERFORMING ORGANIZATION REPORT NUMBER
AFIT/GOR/ENS/07-03

9. SPONSORING/MONITORING AGENCY NAME(S) AND ADDRESS(ES)

10. SPONSOR/MONITOR'S ACRONYM(S)

11. SPONSOR/MONITOR'S REPORT NUMBER(S)

12. DISTRIBUTION/AVAILABILITY STATEMENT
APPROVED FOR PUBLIC RELEASE; DISTRIBUTION UNLIMITED.

13. SUPPLEMENTARY NOTES

14. ABSTRACT
Worldwide, maritime trade accounts for approximately 80% of all trade by volume and is expected to double in the next twenty years. Prior to September 11, 2001, Ports, Waterways and Coastal Security (PWCS) was afforded only 1 percent of United States Coast Guard (USCG) resources. Today, it accounts for nearly 22 percent of dedicated USCG resources. Tactical assessment of resource requirements and operational limitations on the PWCS mission is necessary for more effective management of USCG assets to meet the broader range of competing missions. This research effort involves the development and validation of a discrete-event simulation model of the at-sea vessel interdiction process utilizing USCG deepwater assets. A discrete-event simulation model of the interdiction, control and boarding, and inspection processes has been developed and validated. Through a simulation optimization approach, our research utilizes the efficiency of a localized search algorithm interfaced with the simulation model to allocate USCG resources in the interception, boarding, and inspection processes with the objective of minimizing overall process time requirements. The model is tested with actual USCG data to gain insight on the development of efficient and effective interdiction operations.

15. SUBJECT TERMS
Port Security, Resource Allocation, Simulation Optimization, Tabu Search, Inspection

16. SECURITY CLASSIFICATION OF:			17. LIMITATION OF ABSTRACT	18. NUMBER OF PAGES	19a. NAME OF RESPONSIBLE PERSON
a. REPORT	b. ABSTRACT	c. THIS PAGE			Sharif H. Melouk (ENS)
U	U	U	UU	95	19b. TELEPHONE NUMBER *(Include area code)* (937) 255-3636, ext 4525e-mail:sharif.melouk@afit.edu

Standard Form 298 (Rev. 8-98)
Prescribed by ANSI Std. Z39-18