NAVAL POSTGRADUATE SCHOOL
Monterey, California

THESIS

ACHIEVING LAST-MILE BROADBAND ACCESS WITH PASSIVE OPTICAL NETWORKING TECHNOLOGY

by

Jason L. Schwartz

September 2002

Thesis Advisor: Bert Lundy
Co-Advisor: Mike Tatom

Approved for public release; distribution is unlimited.

THIS PAGE INTENTIONALLY LEFT BLANK

REPORT DOCUMENTATION PAGE

Form Approved OMB No. 0704-0188

Public reporting burden for this collection of information is estimated to average 1 hour per response, including the time for reviewing instruction, searching existing data sources, gathering and maintaining the data needed, and completing and reviewing the collection of information. Send comments regarding this burden estimate or any other aspect of this collection of information, including suggestions for reducing this burden, to Washington headquarters Services, Directorate for Information Operations and Reports, 1215 Jefferson Davis Highway, Suite 1204, Arlington, VA 22202-4302, and to the Office of Management and Budget, Paperwork Reduction Project (0704-0188) Washington DC 20503.

1. AGENCY USE ONLY *(Leave blank)*	**2. REPORT DATE** September 2002	**3. REPORT TYPE AND DATES COVERED** Master's Thesis
4. TITLE AND SUBTITLE Achieving Last-Mile Broadband Access with Passive Optical Networking Technology		**5. FUNDING NUMBERS**
6. AUTHOR (S) Captain Jason L. Schwartz, USMC		
7. PERFORMING ORGANIZATION NAME(S) AND ADDRESS(ES) Naval Postgraduate School Monterey, CA 93943-5000		**8. PERFORMING ORGANIZATION REPORT NUMBER**
9. SPONSORING / MONITORING AGENCY NAME(S) AND ADDRESS(ES)		**10. SPONSORING/MONITORING AGENCY REPORT NUMBER**

11. SUPPLEMENTARY NOTES The views expressed in this thesis are those of the author and do not reflect the official policy or position of the U.S. Department of Defense or the U.S. Government.

12a. DISTRIBUTION / AVAILABILITY STATEMENT Approved for public release; distribution is unlimited.	**12b. DISTRIBUTION CODE**

13. ABSTRACT *(maximum 200 words)*

One of the primary challenges in today's computer networking world is providing enough bandwidth to achieve true broadband access in the local, or last-mile, access network. Over the course of the last decade or so, there has been a tremendous increase in the bandwidth of the core network in the U.S. In fact, a substantial portion of this core network, which primarily consists of fiber optic technology, is unused. This is primarily due to the lack of bandwidth in the last-mile access network. The last-mile access network of today primarily consists of technologies (e.g. digital subscriber line and cable modem access) that rely on infrastructures designed to carry voice and cable television signals. As a result, consumers are not able to enjoy true broadband services.

This thesis discusses and analyzes the use of passive optical networking (PON) technology as possibly the best solution to today's last-mile bottleneck. General PON technology concepts and details concerning the two primary PON technologies, asynchronous transfer mode (ATM) PONs and Ethernet PONs, are discussed. The application of PON technology in achieving fiber to the home, using both PON-only and PON-hybrid infrastructures, is also described. Finally, the current PON business market and regulatory factors are discussed and analyzed.

14. SUBJECT TERMS Passive Optical Networking, Broadband Internet Access, Last-Mile Access, Fiber Optical Networking	**15. NUMBER OF PAGES** 101
	16. PRICE CODE

17. SECURITY CLASSIFICATION OF REPORT Unclassified	**18. SECURITY CLASSIFICATION OF THIS PAGE** Unclassified	**19. SECURITY CLASSIFICATION OF ABSTRACT** Unclassified	**20. LIMITATION OF ABSTRACT** UL

NSN 7540-01-280-5500 **Standard Form 298 (Rev. 2-89)**
Prescribed by ANSI Std. 239-18

THIS PAGE INTENTIONALLY LEFT BLANK

Approved for public release; distribution is unlimited.

ACHIEVING LAST-MILE BROADBAND ACCESS WITH PASSIVE OPTICAL NETWORKING TECHNOLOGY

Jason L. Schwartz
Captain, United States Marine Corps
B.S., United States Naval Academy, 1996

Submitted in partial fulfillment of the
requirements for the degree of

MASTER OF SCIENCE IN COMPUTER SCIENCE

from the

NAVAL POSTGRADUATE SCHOOL
September 2002

Author: Jason L. Schwartz

Approved by: Bert Lundy
Thesis Advisor

Mike Tatom
Second Reader

LCDR Chris Eagle
Chairman, Department of Computer Science

THIS PAGE INTENTIONALLY LEFT BLANK

ABSTRACT

One of the primary challenges in today's computer networking world is providing enough bandwidth to achieve true broadband access in the local, or last-mile, access network. Over the course of the last decade or so, there has been a tremendous increase in the bandwidth of the core network in the U.S. In fact, a substantial portion of this core network, which primarily consists of fiber optic technology, is unused. This is primarily due to the lack of bandwidth in the last-mile access network. The last-mile access network of today primarily consists of technologies (e.g. digital subscriber line and cable modem access) that rely on infrastructures designed to carry voice and cable television signals. As a result, consumers are not able to enjoy true broadband services.

This thesis discusses and analyzes the use of passive optical networking (PON) technology as possibly the best solution to today's last-mile bottleneck. General PON technology concepts and details concerning the two primary PON technologies, asynchronous transfer mode (ATM) PONs and Ethernet PONs, are discussed. The application of PON technology in achieving fiber to the home, using both PON-only and PON-hybrid infrastructures, is also described. Finally, the current PON business market and regulatory factors are discussed and analyzed.

THIS PAGE INTENTIONALLY LEFT BLANK

TABLE OF CONTENTS

I. INTRODUCTION 1

II. CURRENT BROADBAND TECHNOLOGIES 7
- A. DIGITAL SUBSCRIBER LINE (DSL) 8
  - 1. Technical Description 8
  - 2. Capabilities and Limitations 11
  - 3. Current Deployments & Deployment Issues 12
- B. CABLE MODEM ACCESS 13
  - 1. Technical Description 13
  - 2. Capabilities and Limitations 16
  - 3. Current Deployments & Deployment Issues 17
- C. SATELLITE INTERNET ACCESS 17
  - 1. Technical Description 17
  - 2. Capabilities and Limitations 19
  - 3. Current Deployments & Deployment Issues 19
- D. FIXED WIRELESS ACCESS 19
  - 1. Capabilities and Limitations 21
  - 2. Current Deployments & Deployment Issues 22

III. PASSIVE OPTICAL NETWORKING TECHNOLOGIES 25
- A. INTRODUCTION/PON HISTORY 25
- B. PON TECHNOLOGY 29
  - 1. Generic Description 29
  - 2. Asynchronous Transfer Mode-based PONs (APONs) 31
    - *a. APON Introduction 31*
    - *b. How an APON Works 32*
    - *c. Security, QoS, Management and Survivability 36*
  - 3. Ethernet-Based PONs (EPONs) 37
    - *a. EPON Transmission Scheme 37*
    - *b. Security, QoS and Management 39*
  - 4. APONs Versus EPONs 39
- C. CONCLUSION 41

IV. APPLICATION OF PON TECHNOLOGY 43
- A. INTRODUCTION 43
- B. FTTH AND FTTX 43
- C. PON/FREE-SPACE OPTICS (FSO) HYBRID SOLUTION 47
- D. CASE FOR PONS 50
- E. DISADVANTAGE OF PON SOLUTION 57
- F. CONCLUSION 58

V. PON BUSINESS MARKET 61
- A. INTRODUCTION 61
- B. GENERAL U.S. PON MARKET 61

C. U.S. PON/FTTH DEPLOYMENTS 65
1. Grant County, Washington 66
2. Kutztown, Pennsylvania 67
D. MAJOR U.S. PON EQUIPMENT VENDORS 69
E. CONCLUSION 71

VI. REGULATORY FACTORS INFLUENCING PON/FTTH DEPLOYMENT 73
A. INTRODUCTION 73
B. REGULATORY FACTORS INFLUENCING PON/FTTH DEPLOYMENT 74
1. Unbundling and Resale Regulations 74
2. Rights-of-way Access 76
3. Financial Incentives 78
4. Consumer Demand 78
C. CONCLUSION 79

VII. SUMMARY/CONCLUSION 81

BIBLIOGRAPHY 85

INITIAL DISTRIBUTION LIST 91

I. INTRODUCTION

Over the past decade, the amount of information being created and consumed has increased dramatically. In addition, this information has become a vital resource for the government, for businesses and for individuals. Computer networks, especially the Internet, have become key in transporting this information, in the form of digital data, amongst and within these entities. Thus, bandwidth demand on these networks has also increased, as more and more information is moved between individuals and organizations.

The bandwidth of the core network, or Internet backbone, which consists of links between major cities and countries, has grown to meet the information transport requirements. The core network bandwidth is on the order of gigabits per second and is approaching terabits per second. This dramatic increase in bandwidth capability is due primarily to advances in key technologies, such as advances in optical fibers, optical fiber equipment and dense-wave division multiplexing (DWDM). In addition, the bandwidth requirements of the metropolitan network, high-capacity links within cities, have been satisfied with bandwidth on the order of gigabits/second.

One of the major problems with the Internet today is the lack of bandwidth in the local access loop, or "last-mile" portion of the Internet. The local access loop is the portion of the Internet that connects Internet Service Providers (ISPs) and consumers. The current delivery infrastructure for residential broadband access is inadequate, as it does not provide adequate bandwidth to

meet consumer bandwidth needs. This inadequacy can be demonstrated in two ways. First, it can be demonstrated by discussing the disparity between the network core data rates and the access network data rates. More than two-thirds of all U.S. residents with Internet access are still accessing the Internet through 56kbps modems. These modems have a theoretical data rate of 56kbps and generally do not achieve data rates of more than 50kbps. However, some DWDM systems in the core can transport 1.6 Tbps, nearly 30 million times the capacity of the typical access connection. Even if consumers were to have local access rates of 1.544 Mbps, the trunk would still have one million times the capacity.

Many people term this the “overcapacity” problem, which seems to be a misnomer. It is not the abundance of core bandwidth capacity that is the problem. The problem is that the local access bandwidth capability is inadequate. This problem is analogous to the highway and road system. The interstate highways represent the network core and local streets and roads represent residential network access. Throughput and speed are generally more than adequate on the highways (core network). As soon as you leave the highway and enter the city street system (local access network, throughput and speed drop off significantly and traffic (data) can come to a halt. The solution to the problem is to widen and improve city streets and their access (local access network) to the highway system (core network).

The second way to illustrate the inadequacy of the local access network is by analyzing consumer bandwidth requirements and current access data rates. A typical

household in the not-so-distant future will have bandwidth requirements that greatly exceed today's access speeds. Table 1.1 shows what the possible future bandwidth requirements will be. It is easy to see that the access network of today, which primarily provides bandwidth on the order of kilobits/second, is far from sufficient in meeting these projected bandwidth needs.

Application	**Bandwidth Requirements (Mbps)**	**Number of Sessions**	**Total Bandwidth Requirements (Mbps)**
High-Definition TV	20	2	40
Quality Web Surfing	5	2	10
Online Gaming	2	1	2
Telephone	.064	4	0.256
File Transfer	10	1	10
TOTAL Bandwidth	**62.256**		

Table 1.1 Projected Residential Bandwidth Requirements

There is hope in achieving true broadband access for the masses despite the current lack of bandwidth in the access network. The number of households with broadband Internet access should increase dramatically over the next several years. As new broadband technologies extend fiber to the home, new applications are developed and deployed and new legislation is passed, users demand for broadband services will grow and service providers will have incentives to provide these services.

The Federal Communications Commission (FCC) defines broadband as having a transmission rate of at least 200 kbps (Gattuso, Apr. 2002, 1). Broadband access can be more accurately described as high-speed Internet access that is capable of delivering voice, data and video services to your home. Specifically, true broadband Internet access should be no less than 100Mbps. This data rate meets the needs described in Table 1.1, while providing spare capacity for unforeseen applications and services.

Why do we need broadband access to our homes? The push for residential broadband access comes from many fronts, to include the technology industry, the government, consumer demands and the emergence of new applications. Consumers with broadband Internet access have the potential to reap the benefits of applications such as high-definition television (HDTV), video telecommuting, tele-education, video-on-demand, online video games, interactive shopping and yet to be determined applications. In addition to broadband access providing enhanced services, both the technology industry and the U.S. government also see broadband access as a catalyst to the next U.S. economic boom.

Currently, two major technologies provide households with FCC defined broadband access: asymmetric Digital Subscriber Line (aDSL) and hybrid-fiber coaxial cable (HFC), also known as cable Internet access. These two technologies, along with other broadband technologies (e.g. satellite, fixed wireless), are bridges between standard dial-up access and true residential broadband access. Their data rates, which typically do not exceed 1 Mbps, do

not support true broadband applications, like those shown in Table 1.1.

One possible solution to the lack of bandwidth in the local access network is Passive Optical Networking (PON) technology. PON technology can enable fiber optics to be pushed to the curbs and to customer's homes. The basic idea is to share one fiber channel amongst several customers using passive components. True broadband access will be realized once fiber has reached the curbs or homes, as the fiber will deliver voice, data and video services at unprecedented speeds. Access rates of hundreds of megabytes/second, and beyond, will provide consumers with flexible and enhanced services never before dreamed of.

There are technical, political and business issues that must be resolved before PON technology becomes the answer to our broadband access woes. Technically, competing standards need to be ironed out and the cost of equipment and fiber installation needs to be reduced. Politically, legislation, which is in the works, may need to be enacted to provide an environment where PON deployment is encouraged and necessary. Business issues include the need for major paradigm shifts on the parts of broadband providers and the need for sound PON/FTTH business models.

In this thesis, the feasibility and potential use of PON technology as a solution to the local access bottleneck will be examined. The next chapter describes and discusses current "broadband" technologies (e.g. DSL, cable modem access, etc.). Chapter 3 briefly discusses PON history, current organizations working to promote PON technology and describes PON technology. Chapter 4 discusses how PON

technology can be deployed to provide true broadband access in the last-mile, compares PON technology to other local access network technologies and discusses the advantages and disadvantages of PON technology. In Chapter 5, current and future PON business markets are discussed and analyzed, to include current U.S. PON deployments and PON equipment providers. Chapter 6 describes and discusses the current political issues that have and will affect PON deployment in the U.S. Finally, Chapter 7 provides a summary and conclusion to the thesis.

II. CURRENT BROADBAND TECHNOLOGIES

Broadband, or high-speed, Internet access, as defined by the Federal Communications Commission (> 200kbps), is currently provided to consumers via several technologies See Table 2.1 for a summary of these technologies. These technologies provide data rates that far exceed data rates attained by traditional dial-up modem technology and provide an “always-on” connection to the Internet. However, these technologies are not future proof. Current broadband technologies do not have the capability to provide true broadband Internet access, as discussed in the introductory chapter. These technologies are barely sufficient for today’s needs and applications and are merely a bridge between dial-up access and fiber-to-the-home (FTTH) access.

There are two technologies that dominate today’s broadband market: digital subscriber line (DSL) and cable modem access. Of the 10.7 million households (total households in U.S.: 102 million) that have broadband access, 63% of them connect to the Internet via cable modems and 36% of the households connect using DSL (Hansell, Dec. 2001, 2). These two technologies account for approximately 99% of broadband subscribers, with the remaining one percent of broadband subscribers using new and emerging technologies, such as satellite access and fixed wireless access technologies. The remainder of U.S. households uses regular modem dial-up access (over 54 million) or does not access the Internet by any means.

The primary reason for the disparity in use between the first two technologies and the other technologies is

the presence of an already existing infrastructure for cable modem and DSL access. These technologies leverage the existing cable and telephone infrastructures, which are nearly ubiquitous throughout the United States. The other technologies, on the other hand, require the build out of new infrastructures. However, as demand for these technologies grows, more and more infrastructure is being deployed.

The remainder of the chapter will discuss today's primary means of broadband access: DSL, cable modem access and wireless access, to include both satellite access and fixed wireless access. Technical aspects, capabilities, limitations and current U.S. deployments will be discussed for each of these technologies.

A. DIGITAL SUBSCRIBER LINE (DSL)

1. Technical Description

DSL is a technology that runs over the same copper wires that telephone services use. It is a modem technology that converts existing copper telephone lines between the customer and the Central Office (CO)into high data rate lines. DSL is not a single technology, but is a family of technologies based on a generic DSL model. The two most prevalent DSL technologies in use by households today are: asymmetric DSL (ADSL) and very high-speed DSL (VDSL). Other DSL technologies exist, such as high bit rate DSL (HDSL) and symmetric DSL (SDSL), but they are primarily used by small to medium-sized businesses due to their higher subscription costs and limited availability.

An ADSL circuit is similar to a regular dial-up modem circuit; however, the modems used in an ADSL circuit are quite different from the modems used in a dial-up circuit.

The ADSL circuit generically consists of an ADSL modem at the customer's premises and an ADSL modem at the phone company's CO (Figure 2.1). The two modems, unlike regular dial-up modems, use advanced digital coding techniques to obtain greater capacity out of the existing phone line. The two modems create three channels within the telephone line: a high-speed downstream channel for data, a channel for voice or fax transmissions and a medium-speed duplex channel used for upstream data transmission.

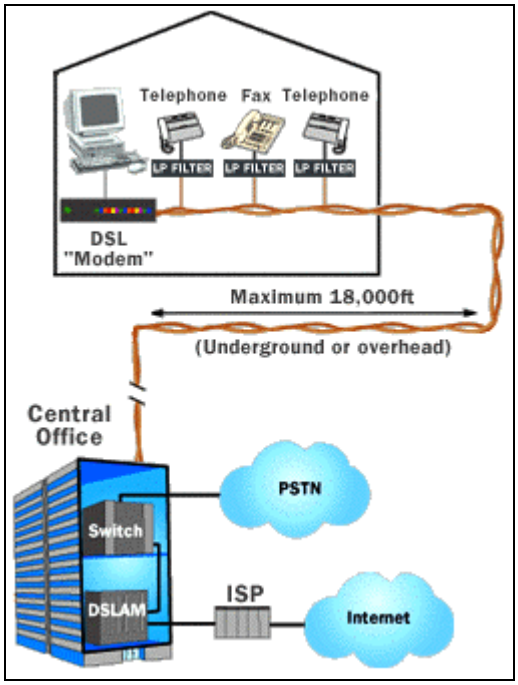

Figure 2.1 Generic DSL Diagram (From: www.howstuffworks.com)

The official American National Standards Institute (ANSI) standard for ADSL uses a system called discrete multi-tone (DMT) (Franklin, May 2002). DMT divides the copper line into 247 different channels. Each of these channels is 4 KHz wide and essentially provides 247 simultaneous modem connections between the end user and the CO. The signals are shifted amongst channels, depending on the channels' capability for transmission and reception.

The bottom 4 KHz is reserved for voice traffic and is separated from data traffic with a low-pass filter.

The ADSL modems used in an ADSL circuit are actually two different pieces of equipment. A DSL transceiver is used on the customer’s end, while the phone company uses a DSL Access Multiplexer (DSLAM) for customer connections. The DSL transceiver, also called an ATU-R, is where the user’s computer interconnects with the DSL line. Transceivers generally provide USB or Ethernet connections for the user. The DSLAM aggregates connections from many customers into a single connection to the Internet.

VDSL is very similar to ADSL in the way it operates over existing telephone lines, but there are a few differences that distinguish VDSL from ADSL. A VDSL circuit consists of a VDSL transceiver in the home and a VDSL gateway, which is usually placed in a junction box between the Central Office and the home. Traditional twisted pair lines connect the VDSL transceiver with the VDSL gateway. However, fiber optic cabling is used to connect the VDSL gateway and the Central Office. The VDSL gateway performs the electrical-optical conversion between the copper wire and fiber. VDSL takes advantage of the higher data rates available with fiber and shortens the copper lines, which provides advantages that will be discussed later.

Currently, there are two competing VDSL standards: DMT, which was discussed earlier, and a pair of technologies known as Carrierless Amplitude Phase (CAP) and Quadrature Modulation. CAP divides the signal into three widely separated channels. The zero to 4 KHz channel is used for voice traffic, the 25-160 KHz channel is used for

upstream data traffic and the 240 KHz – 1.5 MHz channel is used for downstream data traffic.

QAM quadruples the amount of information that can be sent over a line through modulation and phase shifting. Using modulation and phase shifting, four waves, shifted 15 degrees out of phase, can be added. This provides for 16 (2^4 = 16) states and 4 bits per cycle can be sent. The number of states doubles for each additional bit. With today's technology, it is difficult to go beyond 4 bits per cycle.

2. Capabilities and Limitations

The data rate for DSL is relatively good by today's standards. ADSL data transmission speeds range up to a maximum of 10 Mbps for download and up to 1 Mbps for upload. These speeds vary depending on the distance from the CO. Typically, users achieve a data rate of 500 Kbps (Franklin, May 2002).

ADSL is always on, eliminating the need for dialing up to get Internet access. Also, users can simultaneously use their telephone line and surf the Internet, eliminating the need for a separate telephone line. Finally, ADSL provides a dedicated link between the customer and the provider. Bandwidth is not shared amongst other users, which occurs with other technologies. VDSL has the same capabilities as ADSL, but provides a much higher data rate. VDSL can achieve downstream data rates as high as 52 Mbps and upstream data rates of 16 Mbps.

From the perspective of a broadband access provider, DSL technologies are a great way to save cost by leveraging existing infrastructure. Providers need to only worry about customer premise equipment (CPE) and equipment in the

CO. The telephone lines are almost always present, eliminating work on or upgrades to the outside cable plant.

The primary limitation of DSL is distance. Households need to be within 18,000 feet of a CO to get ADSL service and within 4000 feet of a VDSL gateway to get VDSL service. These are the maximum ranges and therefore do not provide the advertised data rates. Customers generally need to be much closer to enjoy the higher advertised data rates. The distance limitation not only restricts available data rates, but it also limits the number of customers that have any access to DSL services.

The existing telephone infrastructure can also limit DSL availability. Voice signals overcome the distance limits via loading coils, which amplify the voice signals. However, DSL signals cannot be passed through loading coils. Therefore, if loading coils are present in the circuit, DSL cannot be used. Bridge taps, which are extensions that service other customers, also prevents DSL from being deployed. Finally, ADSL cannot pass through an analog-digital-analog conversion, preventing it from being used when fiber optics are in the telephone circuit.

3. Current Deployments & Deployment Issues

There are approximately 3.9 million households in the U.S. that access the Internet via DSL. Although this figure has been growing dramatically in the past few years, DSL subscription seems to have leveled off. There are several reasons for its growth slow-down, to include: customers migrating to cable modem access and other technologies, regulatory issues, access to DSL services, customer service problems and recent price increases due to competitors going out of business, decreasing competition.

B. CABLE MODEM ACCESS

1. Technical Description

Cable modem access technologies provide consumers with broadband Internet access through the same coaxial cable that provides cable television channels. The cable modem system essentially treats data as another television signal. The cable modem system (Figure 2.2) puts downstream data, data sent from the Internet to a consumer, into a 6-MHz channel, the same size of channel used by a television signal. Upstream data, data sent from the consumer to the Internet, uses only a 2 MHz signal, as most people download more information than they upload. Of course, additional equipment is required for the transmission of data over the cable system.

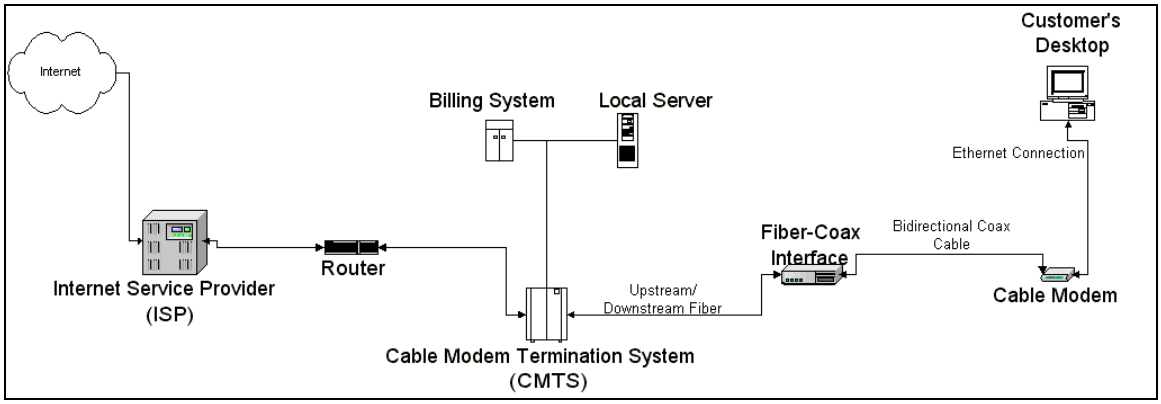

Figure 2.2 Cable Modem System

Two major pieces of end equipment are required for data transmission over the cable system: a cable modem and a Cable-Modem Termination System (CMTS). Cable modems are housed in customers' premises, while the CMTS is housed at either the head end or in local distribution hubs. Together, the cable modem and CMTS differentiate data signals from regular television signals and provide the

computer networking functions required for cable modem Internet access.

The CMTS is analogous to the DSLAM in a DSL system in that it provides the connection between the customer and the Internet. It is an intelligent controller that manages network operations for multiple cable modems. The CMTS takes upstream traffic from a group of household cable modems over a single channel and routes the traffic to an ISP. Prior to reaching the CMTS, data from users is filtered by upstream demodulators, which differentiate user data. The CMTS, in a similar fashion as Ethernet, sends downstream traffic to all connected cable modems, which discard data intended for other modems.

The cable modem is a 64/256 quadrature amplitude modulation (QAM) radio frequency (RF) receiver/transceiver, capable of delivering up to 30 to 40 Mbps of data in one 6 MHz cable channel, which is approximately 500 times faster than a 56 kbps modem (IEC, Cable Modems). Generally speaking, the cable modem provides the interface between a consumer’s computer and the CMTS over the customer’s incoming television cable.

A cable modem modulates and demodulates between analog and digital signals much in the same way as a telephone modem does. A cable modem translates upstream digital information into analog (RF) signals, which are the same signals used by television channels. The cable modem does the reverse for downstream data.

Specifically, the downstream data is received by the cable modem as a 6 MHz channel, residing somewhere between the 50-750 MHz range, after the cable signal has passed through a splitter. The splitter’s job is to separate the

data channel from the regular television channels, reducing the complexity required for cable modems. The 2 MHz upstream channel is transmitted by the cable modem in the 5-42 MHz range. Since the topology of a cable network is generally a tree and branch topology, the upstream traffic encounters a lot of noise. As a remedy, filters are placed throughout the network to eliminate upstream noise.

Cable modems are actually made up of five key components: RF tuner, QAM demodulator, QPSK/QAM modulator, Media Access Control (MAC) and microprocessor (data and control logic). (Figure 2.3)

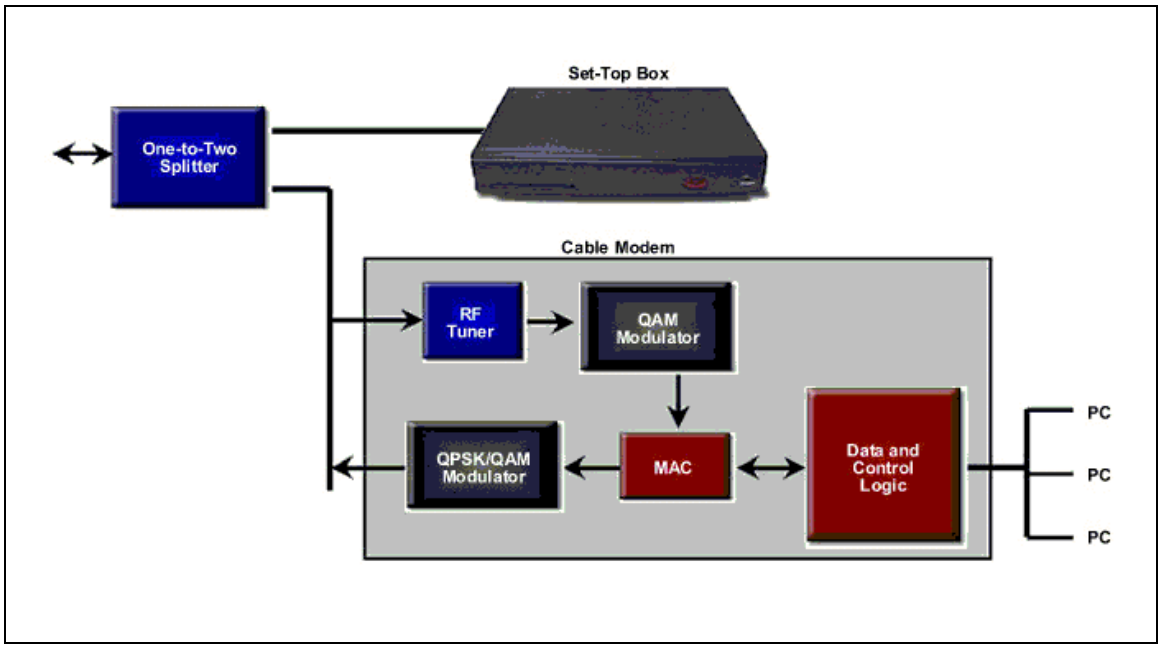

Figure 2.3 Cable Modem Components (From: www.xilinx.com)

The RF tuner connects to the incoming cable line and receives the modulated digital signal, passing it on to the QAM demodulator. The demodulator takes the RF signal, which has had information encoded in it by varied amplitude and phase, and turns it into a simple signal for an analog-to-digital (AD) converter. The AD converter is part of the demodulator and thus not shown in the figure.

The modulator is used for upstream traffic and converts the digital traffic created by the computer into RF signals for transmission on the coaxial cable. The modulator, like the demodulator, has a converter, which in this case converts the digital signal into an analog signal (DA converter). The MAC is a complex interface between the software and hardware. Finally, the microprocessor controls the overall operation of the cable modem and can assist the MAC in interfacing between hardware and software.

2. Capabilities and Limitations

Cable modem Internet access provides another means to achieve high-speed access at approximately the same cost of DSL (approximately $50). If there were just one cable modem in operation in a single system, the downstream data rate would be 27 Mbps in a 64 QAM system or 39 Mbps in a 256 QAM system (Ciciora, Jun. 2001, 3). However, there is usually more than one cable modem in a system and thus the realized downstream data rate is generally between 128 kbps and 1.5 Mbps for each customer.

Like DSL, cable modem access provides “always on” Internet access and does not tie up a phone line. However, cable modem systems do not have the same distance limitations as DSL systems have. The cable system was designed to carry cable television channels for long distances, thus allowing customers to get cable Internet access without having to be within 18,000 feet of the cable head end. Also, cable modem access consumers generally encounter fewer customer service problems with cable modem access providers than do DSL customers.

The primary limitation of cable modem access is that the downstream bandwidth is shared amongst consumers. As a result, data rates are unpredictable and can be slower than 56 kbps access if there are many consumers in the neighborhood online. Security is another concern for cable modem access. Opportunities for sniffing and hacking by other cable modem users exist since every cable modem receives everyone's downstream traffic. Finally, as with DSL, the cost is relatively high. Consumers generally pay an average of $50 a month for cable modem access.

3. Current Deployments & Deployment Issues

There are approximately 6.9 million households in the U.S. that access the Internet through cable modem access. Cable modem access is by far today's leading broadband technology in use, having almost twice as many customers as DSL. Cable modem access providers were able to get an early foothold on the broadband market, as DSL deployments were initially slow and cumbersome. Also, cable modem access providers do not suffer from "required unbundling" regulations, as do DSL providers.

C. SATELLITE INTERNET ACCESS

1. Technical Description

Satellite Internet access systems provide broadband Internet access to consumers who do not have physical "wired" access to DSL or cable modem access. Satellite access technologies provide data rates that are faster than dial-up Internet access but do not require wires or cables. However, with the convenience of not having to be "wired up", there is a cost. Satellite systems are space-based and deployment costs are high.

Satellite Internet access essentially works the same as satellite television access (Figure 2.4). Geostationary (36,000 km above earth) or low earth orbit (720 km above earth) satellites transmit the data over the Ku-band (11.7 to 12.7 GHz) to subscribers on earth. In order to receive the signal, consumers need to have a satellite dish that receives the signal and interfaces with customer premise equipment (CPE).

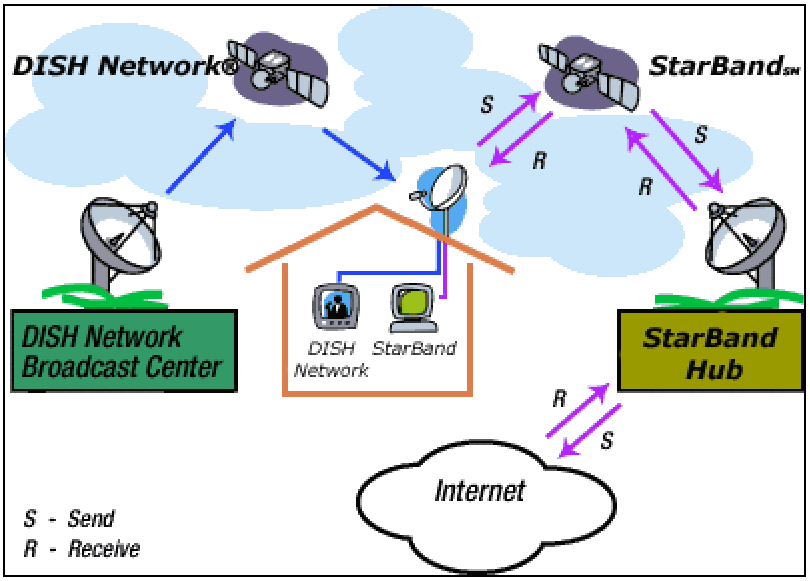

Figure 2.4 Satellite Internet Access (From: www.starband.com/howitworks/index.htm)

The satellites also send data signals to and from ground-based broadcast facilities. These broadcast facilities are the “points of presence” for satellite Internet systems. These facilities have a large aperture satellite dish and equipment to interface with the Internet or other networks. Broadcast facilities are responsible for converting and sending data to and from satellites and the Internet.

2. Capabilities and Limitations

Satellite access provides a means of high speed Internet access when telephone and cable infrastructures are not available or accessible. Satellite access is especially useful for rural customers. These systems provide much quicker deployment times and offer more flexibility for both consumers and providers. Providers do not have to lay or upgrade wires or cables, thus reducing cost for deployment.

The primary limitations of satellite Internet access are higher costs to consumers, lack of providers, uncertainty of existing satellite Internet access providers and delay. Satellite Internet access experiences quite a bit of delay due to the distance the signal has to travel. This can be prohibitive for time-sensitive access.

3. Current Deployments & Deployment Issues

Satellite access consumers account for less than one percent of all broadband consumers. There are approximately 110,000 subscribers to both satellite and wireless services, with satellite consumers making up the majority of this number. The high cost of satellites and satellite deployment has prohibited many companies from getting into the satellite access market. Therefore, consumers have only a handful of providers and services to choose from.

D. FIXED WIRELESS ACCESS

The fixed wireless access market consists primarily of three technologies: spread spectrum, local multipoint distribution system (LMDS) and multipoint multichannel distribution system (MMDS). Fixed wireless systems are systems that provide wireless (RF) Internet access to

fixed, or non-mobile, customers. Spread spectrum networks operate around the 2.5 GHz frequency band, which is an unlicensed band. Customers use an access point (AP) on their equipment to access a wireless Point of Presence (WIPOP), which consists of a router connected to the Internet, an access point, coax cable to antenna amplifier for extending range and an antenna.

There are two different types of spread spectrum methods to construct a fixed wireless broadband network: Frequency Hopping Spread Spectrum (FHSS) or Direct Sequence Spread Spectrum (DSSS) technology. FHSS systems send data packets first to a random channel in the band, while the next packet is sent to another random channel in the same band. DSSS radios operate on a fixed radio channel, in which the signal is spread-out by mixing it with a Pseudo-Noise (PN) code.

LMDS (Figure 2.5) is a wireless technology that uses licensed spectrum in the range of 27.5 to 31.5 GHz. LMDS is a broadband wireless point-to-multipoint system that can be used to provide digital services, including Internet access. LMDS is generally deployed as a cellular architecture. A network of base stations and hubs serve numerous customers, similar to the cell phone service architecture.

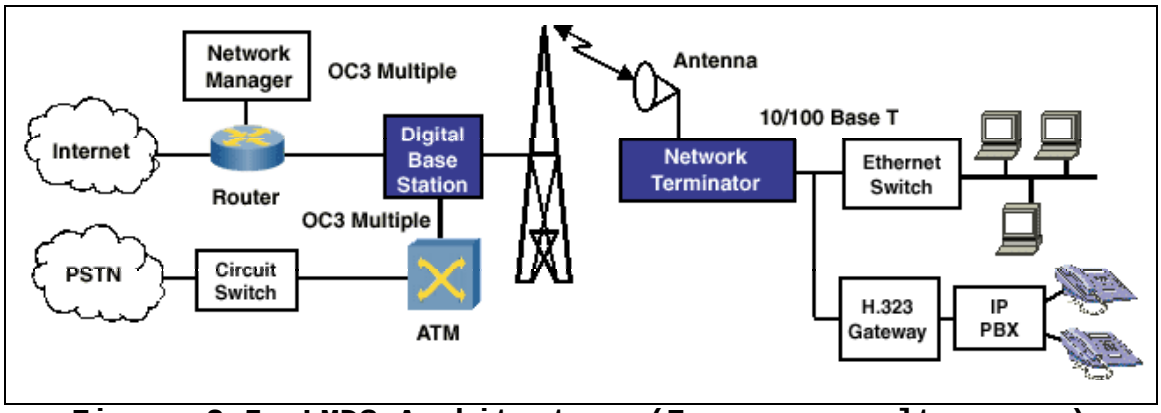

Figure 2.5 LMDS Architecture (From: www.altera.com)

MMDS is different than LMDS in two ways. First, MMDS uses a much lower frequency, generally around 2.5 GHz. Second, the MMDS ISP's tower is a hub in a point-to-multipoint architecture (Figure 2.6) that multiplexes communications from multiple users, hence multichannel in the name. The tower has a backhaul connection to the carrier's network, and the carrier network interconnects with the Internet.

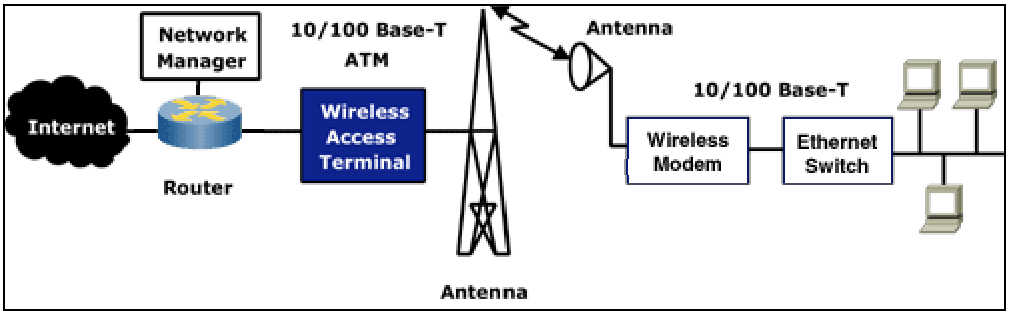

Figure 2.6 MMDS Architecture (From: www.altera.com)

1. Capabilities and Limitations

Fixed wireless access also provides a means of high speed Internet access when traditional wired infrastructures are not available or accessible. Fixed wireless systems' primary advantages are in deployment times and costs. Providers are able to set up fixed wireless systems in a short amount of time compared to "wired" systems (cable, twisted-pair, fiber). They do not

have to deal with rights of way or digging up curbs and streets. The fixed wireless systems are also less expensive to deploy than both wired systems and satellite systems.

Fixed wireless systems are generally available only in metropolitan areas, thus limiting consumers who have access to these systems. For consumers that have access, subscription rates are generally higher than DSL or cable modem access. Frequencies used for fixed wireless systems are licensed, making it difficult for companies to enter the fixed wireless market, thus limiting competition. Finally, fixed wireless systems suffer from reliability issues from weather conditions such as fog or rain. In today's market, service providers will not last if reliability is anything less than 99.999% up time.

2. Current Deployments & Deployment Issues

There are very few fixed wireless systems deployed throughout the U.S. This is due to many factors, to include lack of demand, licensing regulations and reliability issues. Fixed wireless users compose a small fraction of one percent of all broadband users. There is potential for growth, but providers will have to get over a few regulatory and technical hurdles for this technology to see widespread use.

Technology	Number of US Households	Typical Data Rates	Typical Monthly Cost	Advantages	Disadvantages
Dial-up	> 54 million	< 56Kbps	$20	-Inexpensive -Availability	-Slow data rates -Ties up phone line
DSL	App. 3.9 million	784Kbps	$50	-Relatively fast upstream data rates -Use of phone infrastructure -Bandwidth not shared and is stable -Frees up phone line -Always on connection	-Not true broadband -Limited availability (distance to CO) -Poor customer service; long delays for installation -Cost to consumers
Cable Modem	App. 6.9 million	128Kbps to 1.5Mpbs	$50	-Relatively fast downstream at peak speed -Partial use of existing infrastructure -No distance limitations -Frees up phone lines -Always on connection	-Bandwidth is shared and fluctuates -Security concerns -Some work required on infrastructure -Cost to consumers
Satellite	App. 110k with satellite or wireless	- 400Kbps download - 128Kbps upload	$60-$70	-Limited infrastructure required -Available almost everywhere (rural) -Quick deployment	-Higher cost to consumers -Slower data rates -Requires unsightly equipment -Delay & latency -Some systems tie up phone line
Fixed Wireless	App. 110k with satellite or wireless	- 128Kbps to 3Mbps	$50-$60	*-Quick & cheaper deployment* -Limited infrastructure requirements -Flexibility	*-Affected by environment & foliage* -Limited availability -Security concerns -LOS restrictions -Scarcity of available spectrum

Table 2.1 Comparison of Local Access Network Technologies used in U.S.

THIS PAGE INTENTIONALLY LEFT BLANK

III. PASSIVE OPTICAL NETWORKING TECHNOLOGIES

A. INTRODUCTION/PON HISTORY

The goal has been to reduce or eliminate the number of optical to electrical signal transitions and vice versa throughout the development of optical networks. Initially, the primary focus was on achieving this goal for long-distance or core networks. Therefore, systems such as optical repeaters, switches and optical cross-connects have been developed and refined for core networks, allowing core networks to be virtually “transition free”. Passive Optical Networks were developed from the same perspective and were developed to achieve this goal for local distribution networks.

Passive Optical Networking technology was initially developed in the late 1980s. PON technology did not take off, despite its seemingly early start and obvious advantages. The technology failed to make inroads into the market for several reasons, to include high deployment costs, high optical access equipment costs and technology infancy. These high costs essentially made PON deployments cost prohibitive for providers. Also, there were no standards for PON technology at the time, keeping costs high and markets non-existent for PON equipment developers and providers. Thus, PON technology was shelved as it was seen as an impractical last-mile broadband solution. The interest in PON technology was resuscitated in the 1990s with the explosion of the Internet and the corresponding demand for data telecommunications services.

In 1995, a group of telecommunications providers, led by Nippon Telegraph and Telephone, combined to create the

Full Service Access Network (FSAN) initiative (Sweeney, Jun. 2001 3). The initial objectives of the FSAN organization were to standardize a global specification for broadband optical systems and to accelerate the deployment of optical access systems. Today, the FSAN organization has the same objectives, but has grown considerably and is composed of 21 board members (Figure 3.1), 2 adopter members and 20 cooperative supplier companies (Maeda, Dec. 2001 127). The FSAN organization is not a formal standards body, but it does work closely with standards bodies, such as International Telecommunications Union – Telecommunications Standardization Sector (ITU-T), the Asynchronous Transfer Mode (ATM) Forum and European Telecommunications Standards Institute (ETSI), in developing PON standards. In fact, FSAN's work in the PON arena has resulted in the ITU-T G.983 Recommendations, the first of which was adopted in October of 1998. Since then, there have been several G.983 Recommendations formalized (G.983.1 through G.983.5) (Table 3.1), all resulting from FSAN work and support. The G.983 Recommendations are the first and only formal standards for PON technology.

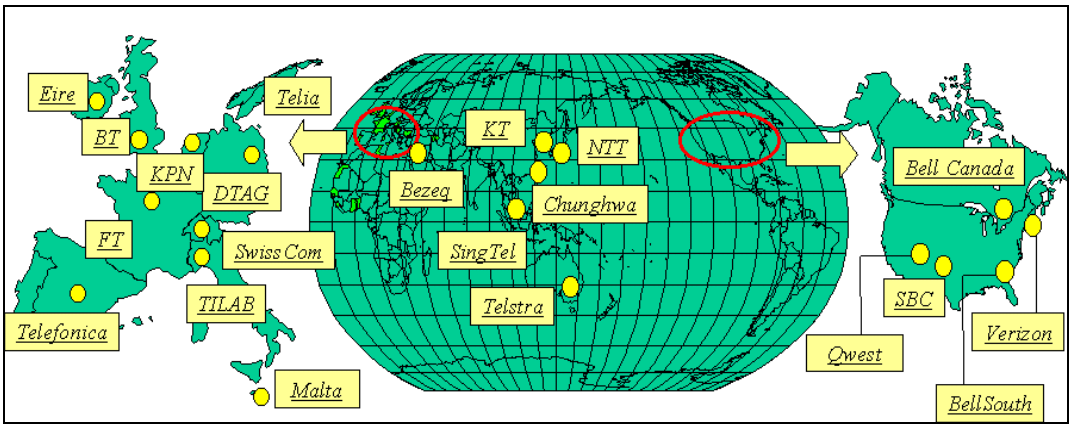

Figure 3.1, FSAN Board Members (From: http:www.fsanet.net)

ITU-T Recommendation	When Adopted	Title
G.983.1	Oct. 1998	Broadband optical access system based on PON.
G.983.2	June 1999	ONT management and control interface specification for ATM PON.
G.983.3	Spring 2001	A broadband optical access system with increased service capability by wavelength allocation.
G.983.4	Nov. 2001	A broadband optical access system with increased service capability using dynamic bandwidth assignment.
G.983.4	Nov. 2001	A broadband optical access system with enhanced survivability

Table 3.1 Adopted ITU-T G.983 Recommendations

In November of 2000, a group of Ethernet vendors, to include 3Com, Alloptic and Cisco Systems, began their own PON standardization effort under the auspices of the IEEE. These companies felt that ATM was not the answer for PONs and that Ethernet should be used instead. The Ethernet in the First Mile (EFM) workgroup (IEEE 802.3ah) was formed within the IEEE 802.3 committee to develop a standard that will apply the Ethernet protocol to the PON access market, eventually leading to a global Ethernet PON (EPON) standard. The goal of the EFM workgroup is to have an EPON standard in August of 2003.

Currently, the IEEE 802.3ah EFM Task Force, as it is officially called, has over 200 individuals from over 80 companies collaborating on the EPON standardization effort. The Ethernet in the First Mile Alliance (EFMA), a 20-plus-member industry organization that promotes EFM awareness, also backs the task force. Thus far, the EFM Task Force has achieved three major milestones: formation of the group itself in November of 2000, approval of a Project Authorization Request (PAR) in Quarter 3 of 2001 and the adoption of a complete set of baseline technical proposals in July of 2002. The Task Force is on track to have the first draft of the EPON specification completed by September 2002 (www.lightreading.com, Mar 2002). There seems to be growing momentum for EPONs as evidenced by the creation of an IEEE task force and the EFMA.

The Fiber To The Home (FTTH) Council is another organization that has been and will be vital to the widespread adoption of PON technology. The FTTH Council, created in July of 2001, was started by Alcatel, Corning Incorporated and Optical Solutions (www.ftthcouncil.org/about.htm). The organization was created in order to educate the public on fiber to the home, promote FTTH technologies and accelerate the deployment of FTTH in North America. Currently, the FTTH consists of 65 different members who come from several industries to include telecommunications, computing, systems-integration and the content provider industry. Although the Council is relatively young, they are playing an important role in speeding up the adoption of PON by working with Congress and with communities that have decided to adopt PON technology.

B. PON TECHNOLOGY

1. Generic Description

A Passive Optical Network (PON), also known as an optical access network, is a treelike fiber-optic access solution consisting of branches called optical distribution networks (ODNs). An ODN is the passive part of a PON and is the outside cable plant portion of the PON, connecting the central office (CO) to the customer premises. The ODN is passive in that it does not require active electrical components. A generic PON architecture consists of an optical line terminal (OLT), passive optical splitter (POS), single-mode optical fiber, and an optical network unit (ONU) or optical network termination (ONT) (Boer, Aug. 2001, 15) (Figure 3.2). The OLT and ONU/ONT are active devices and require electrical components.

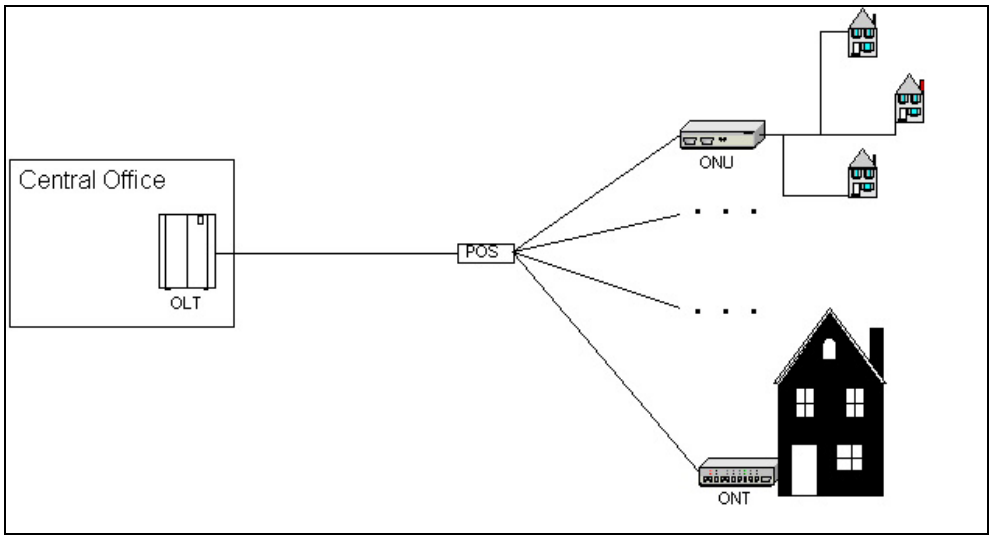

Figure 3.2 Generic PON Architecture

The OLT (Figure 3.3) is a special switch at the central office that interfaces with the service provider's core data, video and telephony networks and provides user services. The OLT either generates light signals for the ODN or relays SONET signals (e.g. OC-12 signals) between a

SONET cross-connect and the ODN. Whether the OLT generates signals, relays SONET signals or interfaces with the cable television and public switched telephone network, it always functions as a head-end controller. It is responsible for scheduling traffic, broadcasting traffic to the ODN, receiving traffic from the ODN, handling Quality of Service (QoS) issues and maintaining service level agreements (SLAs).

Figure 3.3, Optical Line Terminal (Left) and Optical Network Termination (Right) from Terawave (From: http:www.terawave.com/tw600.shtml)

The POS splits the light coming from the OLT into several optical "branches", which connect to the ONTs/ONUs. The splitter performs the reverse operation for OLT-destined light traffic generated by ONTs/ONUs. It receives optical signals from the various ONTs/ONUs and sends them upstream on a single optical fiber to the OLT. Because it is passive (no electrical components), the POS does not perform any multiplexing functions. In many vendor PON deployments, the splitter splits the incoming OLT optical fiber into 32 or 64 fibers, which extend to ONTs. In all cases, the actual bandwidth allocated to each customer depends on the capacity of the fiber between the OLT and splitter and the number of ONTs connected to the splitter.

The ONU and ONT are the devices that receive optical signals from the OLT and convert them into electrical signals for use by the customer. They also do the reverse for customer traffic sent to the OLT. The proximity of the fiber to the home determines which type of device to use. An ONT is used when fiber extends all the way to the customer premises (e.g. Fiber To The Home) and an ONU is used when fiber does not extend all the way to the building (e.g. Fiber To The Curb). The latter case is used when PON technology is combined with another technology, such as broadband wireless, to provide a high-speed access network. ONTs provide various drop interfaces to the customer. Typical interfaces include 10/100 BaseT interfaces, T1/E1 interfaces and DS3/E3 ATM interfaces (Figure 3.3). ONTs may also include coaxial cable interfaces for television services and RJ-45 phone jacks for telephone services.

The generic method of data transmission within a PON is relatively simple. Data cells are broadcast by the OLT to all ONTs, which either discard or decode the cells based on cell addressing information. Transmission from the ONT to the OLT is done using some sort of optical signaling format. The most commonly used optical signaling techniques are Wavelength Division Multiplexing (WDM)/ Wavelength Division Multiple Access (WDMA) and Time Division Multiplexing (TDM)/Time Division Multiple Access (TDMA). PONs can support several other optical signaling formats depending on the specific PON implementation.

2. Asynchronous Transfer Mode-based PONs (APONs)

a. APON Introduction

ATM-based PONs (APONs) were proposed as the PON standard by the FSAN committee. ATM was chosen as the

committee felt it was well suited for multiple protocols and for multimedia applications. The choice may have also been influenced by the telecommunications heavyweights within FSAN, as they are major proponents and users of ATM technology. Regardless of the reason, the FSAN committee's proposal was adopted as an ITU standard, ITU-T Recommendation G.983, in 1998. The G.983 Standard was the first PON standard and is currently the only officially recognized standard for passive optical networks. The key features of the ITU-T G.983 standard are (Ching, May 2001, 12):

- ATM cell based.
- Symmetric (155.52Mbps both ways) and asymmetric operation (622.08MBbps downstream, 155.52MBbps upstream). Note: data rates are for the optical fiber connecting the OLT to the splitter.
- A range of up to 20km between OLT and ONTs.
- Up to a 32-way split by the optical splitter.

b. How an APON Works

APONs basically work as big ATM networks (Greenfield, 2001, p. 180). Virtual circuits (VCs) are established between customers across the PON to the destination. All of the VCs are eventually bundled into virtual paths. Also, the 53-byte ATM cell is the basis for cells used in PONs. As will be shown later, the cell size is different for upstream (ONT to OLT) traffic.

Transmissions from the OLT to the ONT (downstream) and from the ONT to the OLT (upstream) occur over two separate channels, using TDM for former and TDMA for the latter (Figure 3.4). The original G.983.1 specification required that downstream traffic occurred

between optical wavelengths of 1480nm and 1580nm and upstream traffic to occur between 1260nm and 1360nm. In April 2001, the G.983.3 Recommendation was approved by the ITU-T, which changed the wavelength allocation in order to increase service capability (Effenberger, Dec 2001, p. 119).

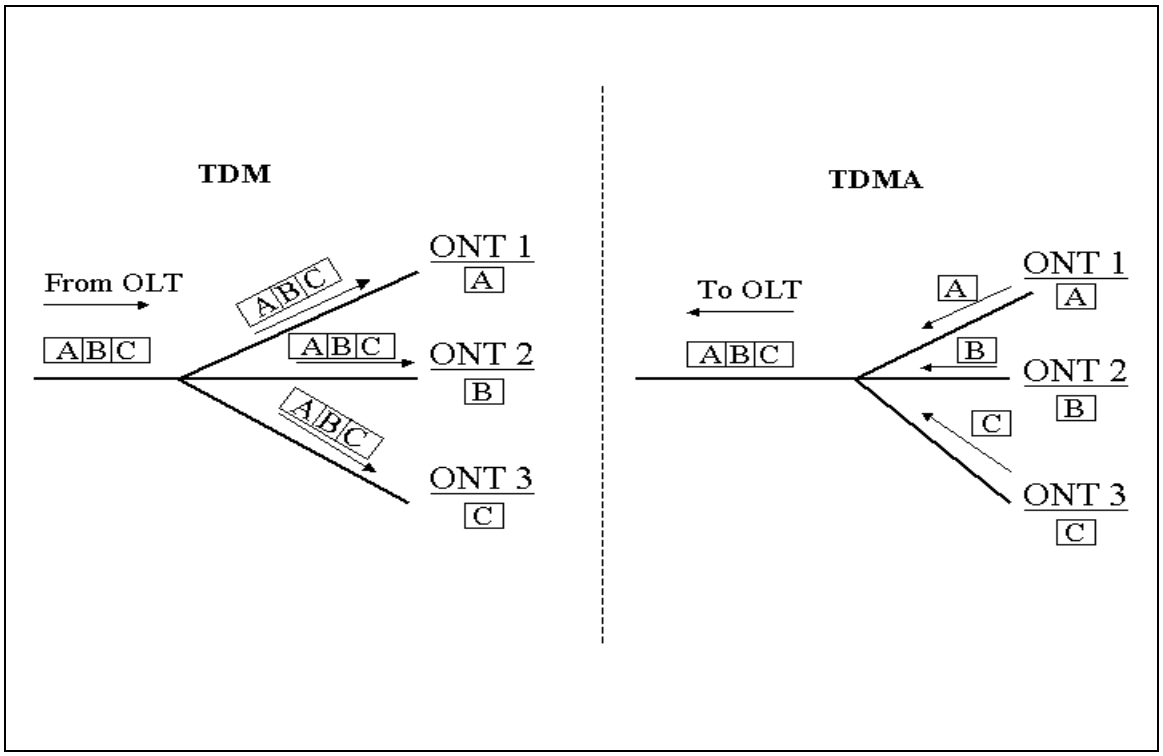

Figure 3.4 TDM Downstream Transmission and TDMA Upstream Transmission

The APON specification provides for two types of cells, data cells and Physical Layer Operations and Maintenance (PLOAM) cells. Each of these cell types is based on a standard ATM cell, but each serves a different function. Data cells are used to carry data, signaling information and operations and management (OAM) information. PLOAM cells carry information about the network’s physical infrastructure. PLOAM cells also carry grants, which are used by the OLT to provide access to the PON.

A complex frame structure (Figure 3.5) is used by APONs to provide access to the network and to transmit the data cells and PLOAM cells. The upstream and downstream channels are divided up into frames and time slots, also called cells, with the exact size of each depending on whether the PON is symmetrical or asymmetrical. For example, downstream frames for symmetrical networks are composed of 56 time slots (cells). 54 of these time slots are for data and 2 time slots are used for management. For efficiency purposes, each time slot is 53 bytes, the same size as an ATM cell.

Upstream frames run 56 bytes each and are 53 time slots long (Greenfield, 2001, p. 181). The additional 3 bytes for upstream frames are generally used for management and contain the following three fields: guard time field to provide separation between cells, preamble field for bit synchronization and delimiter field to indicate the start of the ATM cell.

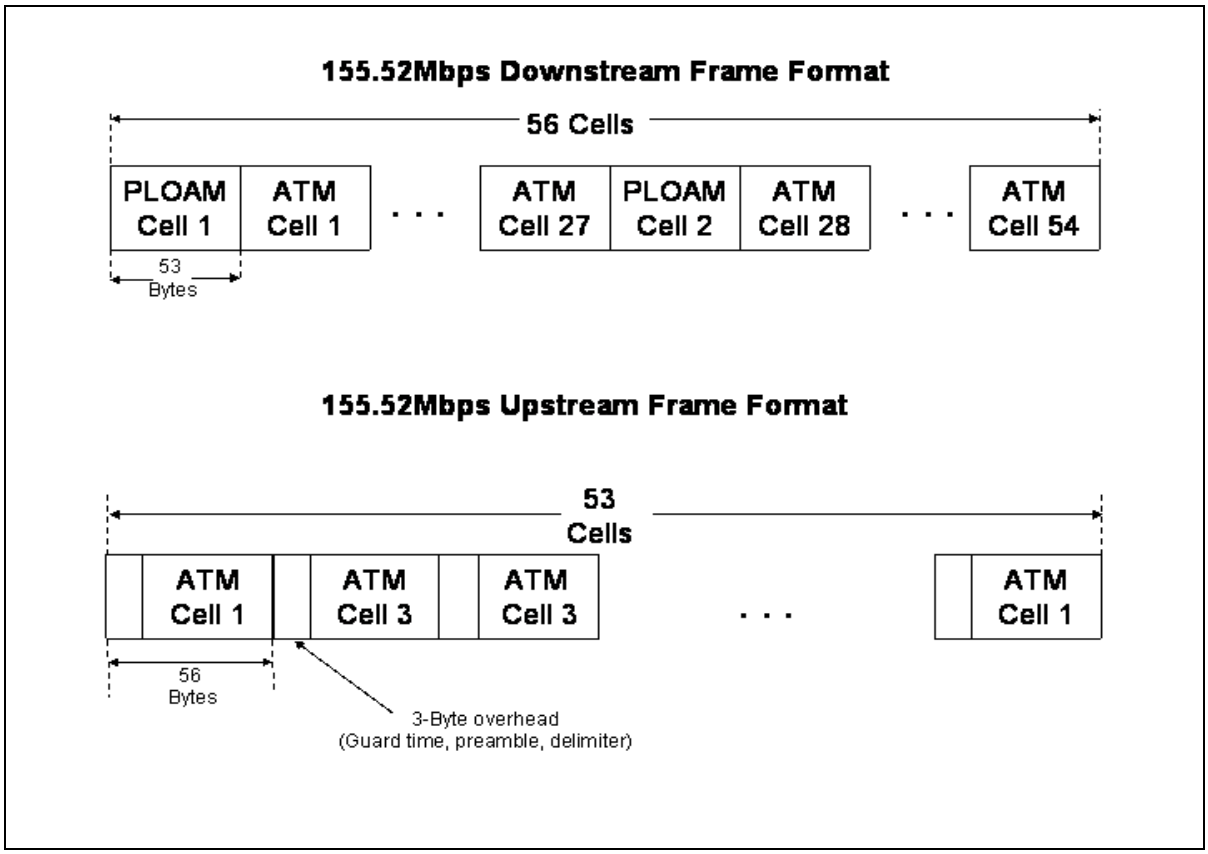

Figure 3.5 Symmetric 155.52Mbps Frame Formats

So how do all these pieces come together to transport data in an operational APON? When an OLT has data for a certain ONT, it sends the ATM cell down the network to every ONT. Each ONT compares the incoming cell's 28-bit virtual path identifier/virtual circuit identifier (VPI/VCI) against its own VPI/VCI. If the VPI/VCIs match, the ONT copies the data and removes the cell. Otherwise, it discards it. When the ONT needs to send data, it must wait for an OLT-generated PLOAM cell containing the ONT's grant number. Once it sees its own grant number, which is assigned by the OLT when the ONT joins the network, the ONT transmits its cell. The OLT receives the cell and passes it on to the network upstream of the OLT.

Once an APON is operational, adding an ONT to the network is relatively simple and seamless. The network does not have to be taken off line to add a new ONT, nor does the addition of an ONT interfere with existing customers. The OLT periodically sends a ranging grant that can be answered by any ONT. Any new ONTs that receive this grant respond with a unique serial number and an acknowledgement. In response, the OLT configures the ONT with an APON ID, PLOAM grant number and a data grant number and allows the ONT to join the network.

c. Security, QoS, Management and Survivability

Four crucial metrics for any network are security, quality of service (QoS), management capability and survivability. Security has been a contentious issue for APONs due to its broadcast nature. As noted earlier, OLTs broadcast cells to all ONTs and thus any ONT could read all downstream cells. The APON specification provides for scrambling to alleviate the potential for ONTs eavesdropping. The cell's data is encrypted with a 24-bit key, which can be changed dynamically. This is a relatively weak security scheme and the FSAN committee is working on bolstering security functions for APONs.
A relatively new ITU standard, G.983.4, specifies a Dynamic Bandwidth Assignment (DBA) mechanism to improve PON efficiency and QoS. Essentially, the DBA mechanism dynamically adjusts bandwidth among the ONTs. This allows providers finer granularity in managing traffic and bandwidth requirements. It also enables providers to add more customers to the network due to increased bandwidth efficiency and provide enhanced services to customers.

Adequate management and fault tolerance are key

to providing a reliable network that customers can trust to be “up” all of the time. No provider would be in business very long if their APON did not have adequate up-time. Management within APONs is achieved through OAM cells. ONTs use OAM cells to report information about themselves (status, problems, etc.) to the OLT. OAM cells are also used to manage the physical network by aligning lasers and measuring power output (Greenfield, 2001, p. 183). Survivability is achieved through network redundancy as specified by the G.983.5 Recommendation. Each ONT will connect to two OLTs, providing two protection situations. Under 1+1 protection, transmitters and receivers on both side of the network pick the cleaner line. One-to-one protection lets the transmitter (either OLT or ONT) to choose which line to use, leaving the other line unused (Greenfield, 2001, p. 183).

3. Ethernet-Based PONs (EPONs)

The primary difference between APONs and EPONs is how data is transmitted. In EPONs, data is transmitted in variable-length packets of up to 1518 bytes, which is defined by the IEEE 802.3 Ethernet protocol (Pesavento, May 2002, p. 3). In APONs, data is transmitted in fixed length 53 byte cells (48 byte payload and 5 byte overhead) as specified by the ATM protocol standard.

a. EPON Transmission Scheme

As with APONs, upstream and downstream transmissions are performed over separate channels and do not rely on the basic CSMA/CD protocol. However, the EPON standard will likely use different optical wavelengths for these channels. Specifically, EPONs will use the 1550nm

wavelength for downstream traffic and the 1310nm wavelength for upstream traffic.

The process of transmitting data downstream and upstream will also be different than the process used in APONs. Data is broadcast downstream to all ONTs in variable-length Ethernet packets (Figure 3.6). ONTs identify and remove their respective traffic by looking at the packet header, which identifies its destination ONT.

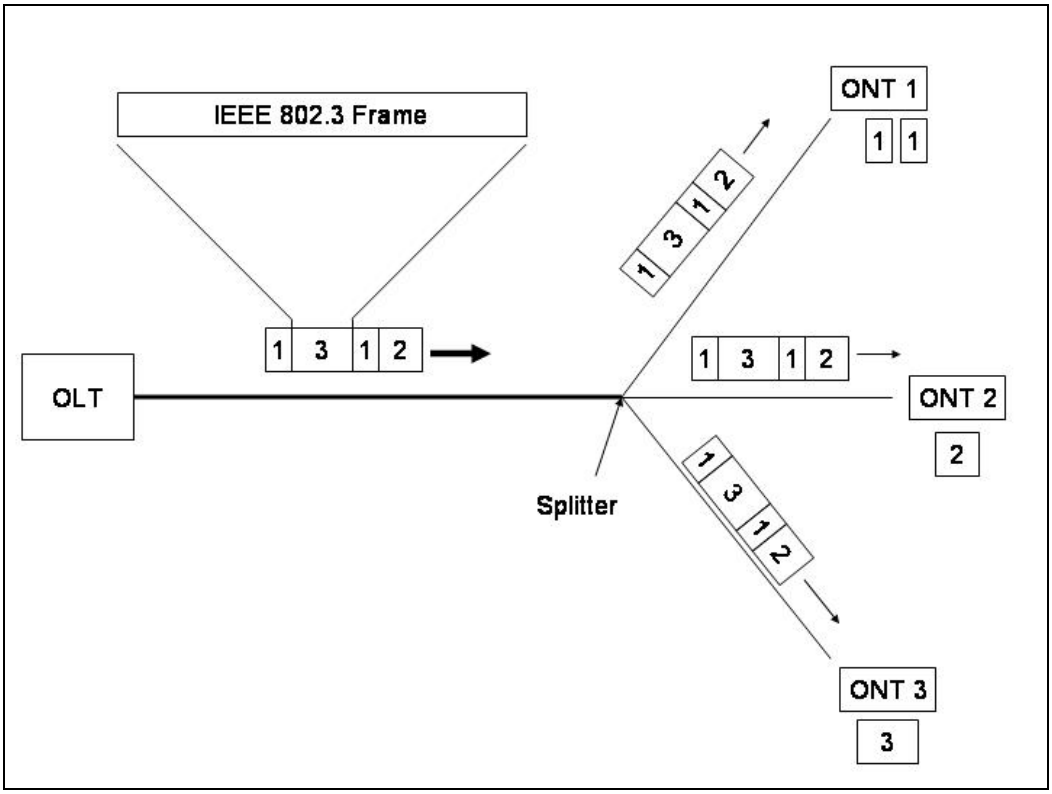

Figure 3.6 EPON Downstream Transmission

Upstream transmission is managed using TDM. Data is still transmitted in a variable-length packet of up to 1518 bytes, but each ONT has its own time slot in which to send its packets. These time slots are synchronized to avoid transmission collisions once the transmissions are aggregated onto the single upstream fiber. The TDM controller in each ONT, along with timing information from

the OLT, control upstream timing of the packets within ONT-dedicated time slots.

b. Security, QoS and Management

Due to EPONs infancy, many of the security, QoS and management issues have not been finalized. There have been many proposals to address each issue with a few as top candidates for the upcoming standard. The Ethernet standard does not have built-in security mechanisms. Therefore EPON developers will need to create EPON specific security methods, especially since downstream traffic is broadcast to all ONTs. In addition, equipment makers may use other IP security mechanisms and techniques, such as firewalls and VPNs. These would be sufficient, but would add cost to the equipment.

Network QoS and management, as noted earlier, are key issues that need to be addressed for any network to be successful. The EFM Task Group has been focusing quite a bit of time and effort on addressing these issues, as they are not inherent in the standard Ethernet protocol. Many researchers believe that, at gigabit rates, EPON will simply rely on an IP traffic-management mechanism to offer bandwidth management and QoS capabilities (Liu, Mar. 2002, p. 5). Some possibilities include the use of differentiated services (DiffServ) and the use of a type-of-service field specified by IEEE 802.1p.

4. APONs Versus EPONs

APONs and EPONs are currently the two major PON flavors. APONs are more mature than EPONs in terms of standards, testing and equipment, but the push for EPONs has been growing steadily in recent years. Technically, the only major difference is the use of fixed-length 53

byte cells by APONs and the use of variable-length 1518 byte packets by EPONs. However, proponents of APONs and EPONs point out many other differences, debating efficiency, complexity and quality of service. Table 3.2 provides both differences and advantages of each approach.

	APON	**EPON**	**Comments**
Standard	ITU-T G.983 Recommendations	None; being developed by IEEE	APONs are in the lead
Underlying Technology	ATM	Ethernet	Fixed size packets simplify the upstream traffic
Security	Scrambling incorporated in APON standard protocol	TBD; work is being done on inherent security as well as implementing existing security techniques for IP	Applications and upper layers may provide security
QoS	APON DBA protocol	TBD	DBA is primarily for upstream traffic
Speed	Symmetric:155Mbps & 622Mbps; Asymmetric: 622Mbps d/s, 155Mbps u/s; Gigabit rates being studied	Gigabit rates (specifically 1.25Gbps) being studied by IEEE 802.3ah Task Force	Gigabit rates are a challenge for both
Advantages	Mature, QoS, efficiency, better management capabilities, standardized	Ethernet is everywhere, scalable, no “cell tax”	Arguments can be made for both APONs and EPONs

Table 3.2 APONs versus EPONs

C. CONCLUSION

PON technology, despite its slow start, has sufficiently matured and is ready to provide consumers with true broadband Internet access. The potential data rates, from tens of Megabits/second to Gigabits/second, are the number one reason PONs are the true broadband solution. As will be seen in the next chapter, implementing PONs versus any other “broadband” technology has many other advantages that make it a true broadband solution.

Standardization efforts by the FSAN committee have allowed the implementation of operational APONs to become a reality. PON equipment costs have been drastically reduced and PON awareness has increased substantially due to standardization efforts. The emergence of EPONs has also been key in the development and implementation of PONs. The EPON effort, although not as mature as the APON effort, has provided competition, increased awareness and increased market potential for vendors, all of which will help accelerate the widespread adoption of PON technology. It is too early to tell which technology will win the PON race and it may be that they will coexist. Either way, the competition and debate between the two technologies will only help the overall PON effort.

THIS PAGE INTENTIONALLY LEFT BLANK

IV. APPLICATION OF PON TECHNOLOGY

A. INTRODUCTION

PON technology, despite its infancy, seems to be the obvious technology choice in providing consumers true, future-proof broadband Internet access. PONs address the needs of the last-mile infrastructure between the service provider's CO, head-end or point-of-presence (POP), and residential customers. PON technology, whether it is in the form of ATM or Ethernet, allows consumers and service providers to realize the advantages of fiber in the neighborhood and fiber to the home (FTTH). Unprecedented data rates and unforeseen applications will be realized with PON technology. Consumers are not the only ones to enjoy the benefits of PON technology as service providers will also enjoy many advantages, such as tremendous savings in outside cable plant maintenance.

This chapter will describe how PON technology can be used to achieve FTTH and more generically how it will provide for fiber-to-the x (FTTx), where x can be a variety of locations (e.g. curb, cabinet, multi-tenant unit, etc.) that terminate the fiber prior to it reaching the home. A hybrid solution that uses a combination of PONs and free-space optics (FSO) will also be discussed. Finally, the pros and cons of using PON technology for FTTH will be discussed.

B. FTTH AND FTTX

Fiber to the home (FTTH) is probably the most exciting and promising application of PON technology. FTTH will allow consumers to access the Internet at 100Mbps and possibly beyond, which is probably the primary reason for

FTTH and PONs. FTTH will also provide enough bandwidth for other impending high bandwidth applications, such as HDTV, video on demand, teleconferencing, interactive gaming, telecommuting and other technologies. As more and more consumers take advantage of such applications, the demand will grow for these and other future high-bandwidth applications, increasing the need for FTTH.

So how do we achieve FTTH? PON technology seems to be the best way to achieve FTTH. Point-to-point fiber is the other leading contender for FTTH. The point-to-point fiber architecture consists of individual strands of fiber that are run from the central office (CO) to individual homes/buildings. As will be shown later in the chapter and may be evident already, the point-to-point architecture is not ideal in terms of cost and flexibility when compared to PON technology.

In a strict FTTH architecture, all homes that are part of the PON distribution network will have fiber terminating in their optical network terminals (ONTs). Basically, fiber will run to the homes and will not be prematurely terminated at the curb or any other location. The customer will interface with the PON at the ONT and will have access to the services provided by that particular provider. Figure 4.1 illustrates an APON FTTH example. EPON FTTH architectures would be essentially the same as APON FTTH architectures.

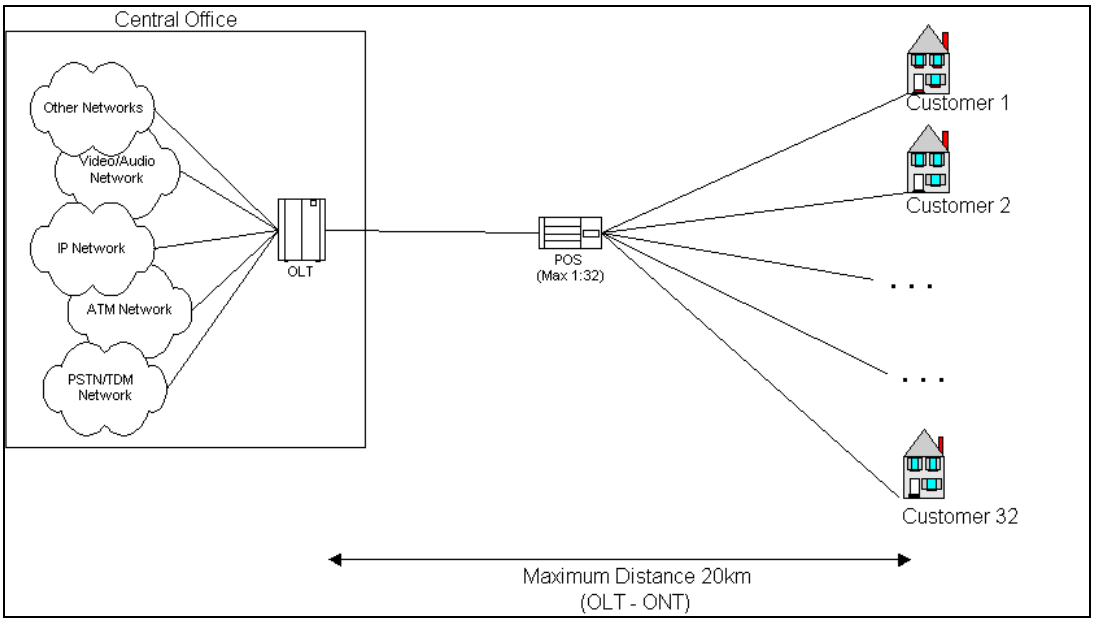

Figure 4.1 APON FTTH Architecture

There may be cases when deploying fiber all the way to the home is not feasible. Several reasons why FTTH may not be possible include: rights of way may not be obtainable, the cost of laying the fiber may be too high or service providers want to deploy fiber in an incremental approach. When the deployment of FTTH is not possible, FTTx architectures are the next best option. They combine the high-speed capability of fiber with pre-existing or less costly technologies. They do not, however, provide broadband data rates achieved by strict FTTH architectures. Figure 4.2 illustrates various FTTx logical architectures. Architecture A is fiber to the exchange (FTTeX), B is fiber to the cabinet (FTTCab), C is fiber to the curb (FTTC) and D is fiber to the home/building (FTTH/FTTB). In these scenarios, PONs are used as an optical distribution backbone network that feeds other technologies, such as xDSL technologies or wireless technologies. The fiber is pushed as far into the neighborhood as possible and then

another technology is used to fill the gap between the fiber and the home or building (e.g. apartment complex).

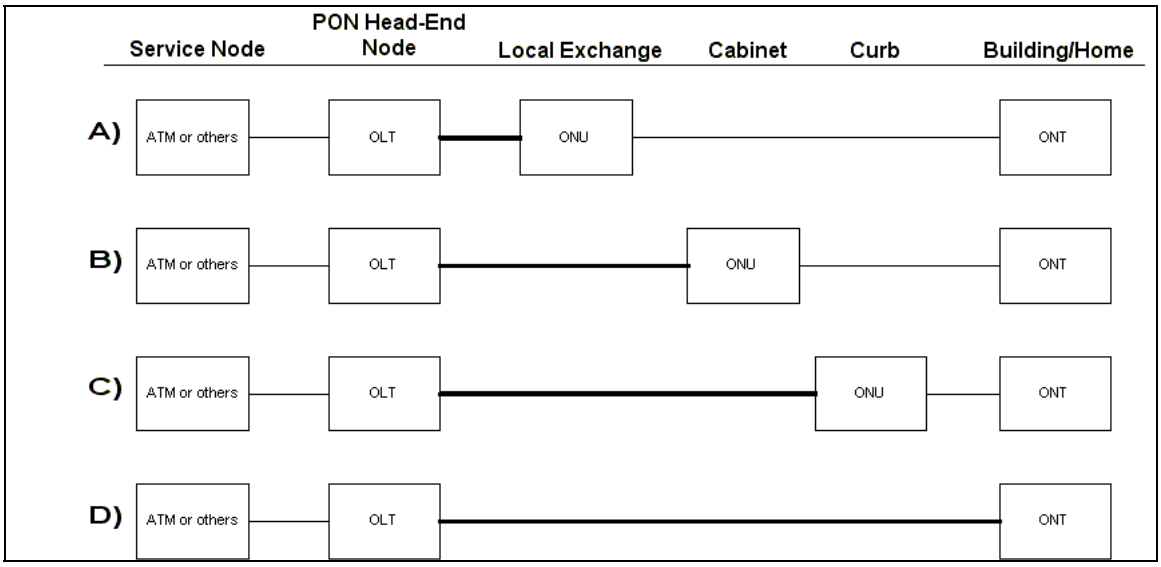

Figure 4.2 Generic FTTx Architectures

Some of the first wave PON deployments have and will continue to be used to leverage and enhance existing infrastructure. As will be discussed in the next chapter, the PON FTTH market growth potential is strong and there are current PON FTTH deployments. However, due to deployment costs and the current uncertain state of the telecommunications market, many service providers and telecommunications companies are opting to use PONs to feed other technologies. In fact, the FTTC market is expected to grow from $250 million in 2001 to over $900 million in 2004 (Ching, May 2001, 17). The three primary architectures, as shown in Figure 4.3, are hybrid-fiber coax feeder, DSLAM feeder and broadband wireless feeder.

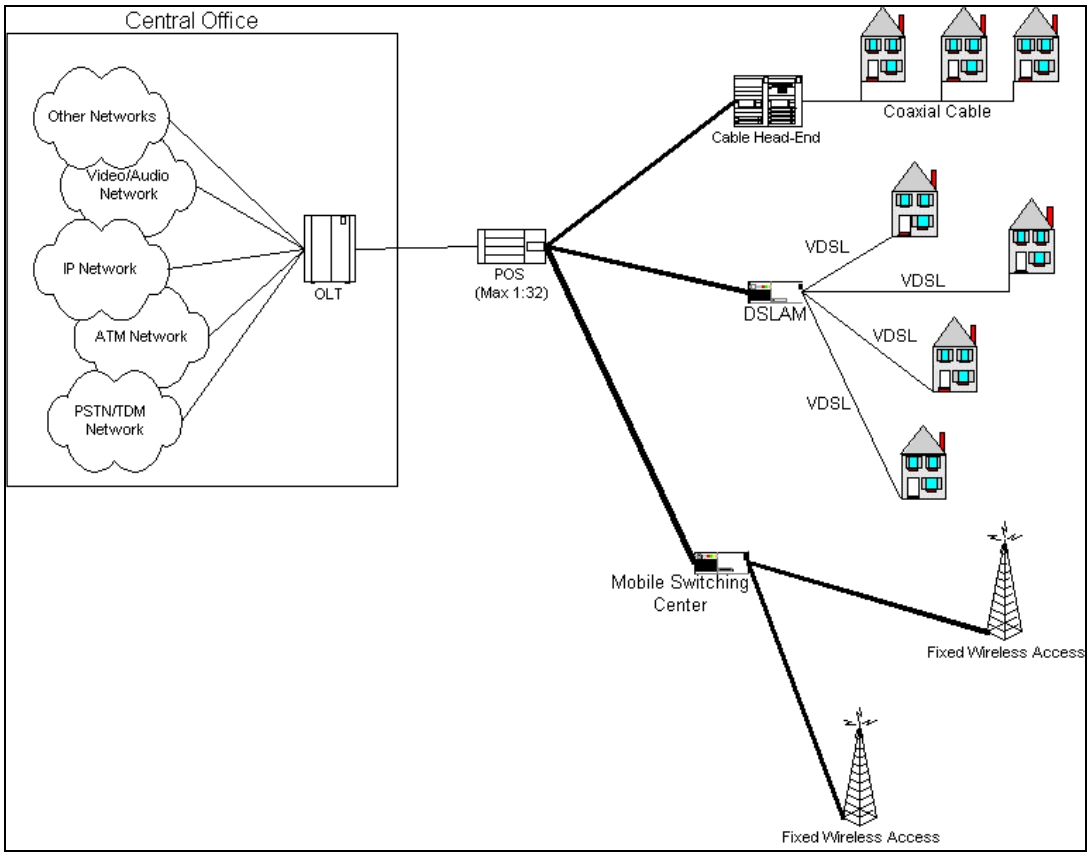

Figure 4.3 Primary PON FTTx Applications

C. PON/FREE-SPACE OPTICS (FSO) HYBRID SOLUTION

Free-space optics (FSO), the use of optical transmissions through the air, was once thought of as a complete replacement for optical fiber. It has the potential to offer high-speed broadband access without the expenses, hassles and time delays of laying optical fiber. However, with the emergence of PON technology and the search for more cost-effective ways of “optically” reaching consumers, FSO will take on a new role as a complementary technology, quickening the deployment of broadband access networks, specifically PONs.

FSO technology is an optical technology that can carry full-duplex data, without optical fiber, over several hundred meters at Gbps rates. FSO systems (Figure 4.4) use

low-power infrared lasers to transmit data between FSO nodes, which interface with a “wire” based system. These lasers operate in an unlicensed frequency band and can operate in an eye-safe manner. The systems are capable of very high data rates, with some commercial systems advertising Gbps rates. However, the lasers’ limited power restricts range and bad weather, mainly fog, can limit the reach of these line-of-sight systems. Typical ranges are from a few city blocks up to one kilometer, which are generally sufficient for backbone or other short-range purposes. Of course, as the range is increased, potential data rate decreases.

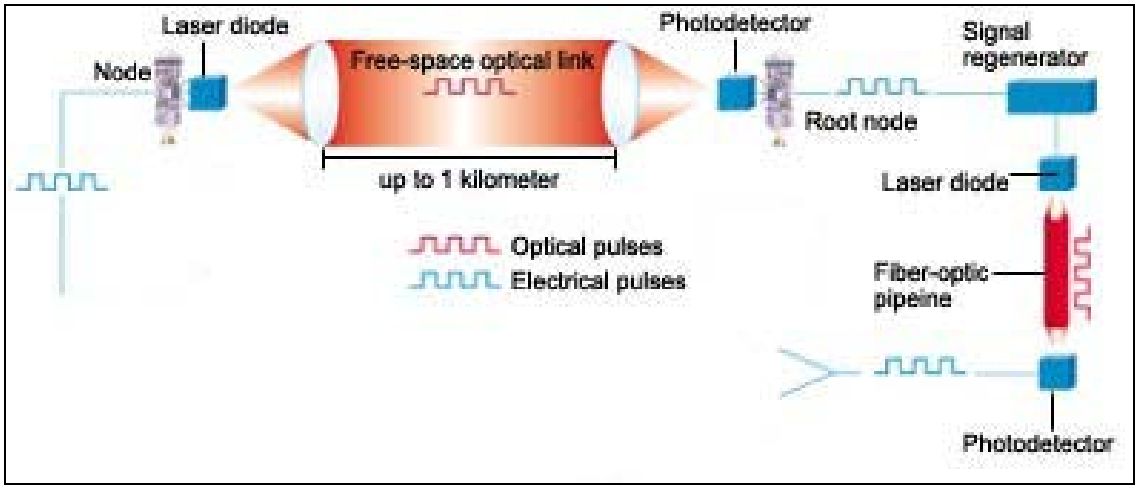

Figure 4.4 Generic FSO System (From: www.sciam.com)

Based on the brief description of FSO technology, one may wonder why use fiber optic cabling at all. FSO systems have the ability to get true broadband services to consumers without the hassles that accompany laying optical fiber. The primary reason FSO systems should be used as a complementary technology and not a stand-alone technology is reliability. Service providers deploying FSO-only networks would not be able to guarantee an acceptable reliability level, especially when compared to PON

technology. Therefore, FSO technology is best used to fill potential gaps in PON deployments.

Service providers' central offices or POPs are generally centrally located within a city or community. In order to deploy PONs on a large scale, service providers need to lay a significant amount of fiber optic cable from the OLT to optical splitters and then to homes. Deploying fiber optic cable from the OLTs to the splitters will generally be more costly, require more time and require more rights-of-way permits than deploying fiber optics from the splitters to the homes. By using FSO systems as the link between CO and passive optical splitters (Figure 4.5), service providers would be able to significantly minimize these costs, times and requirements while still providing optical speeds to the consumer. Having several FSO nodes in series can mitigate the FSO reliability risks. This will reduce the distances between nodes, reducing the effects of weather on the shortened FSO beams. FSO links may be used elsewhere in the system, such as from the POS to homes, but the significant cost savings and reduced deployment times are realized by replacing the fiber optics in the PON backbone with FSO.

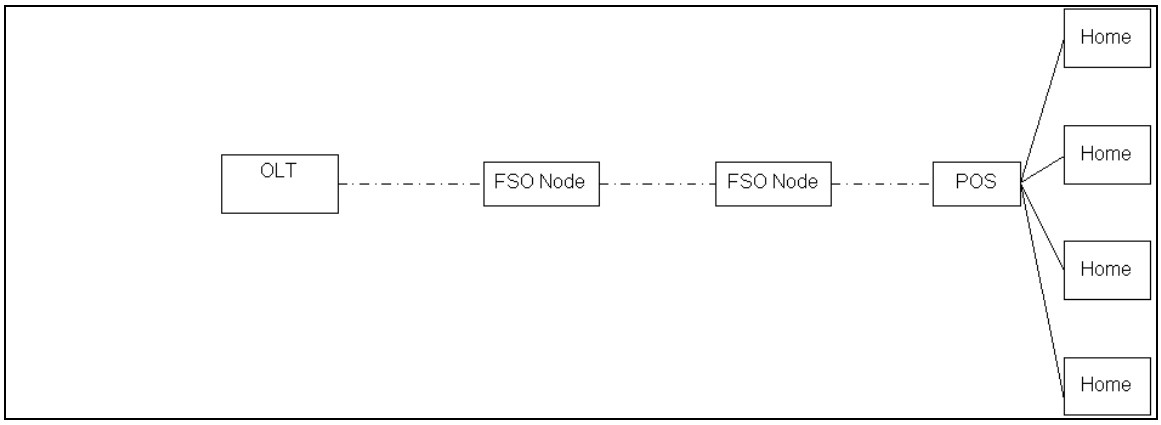

Figure 4.5 Logical PON/FSO Hybrid Architecture

Service providers can also use PON/FSO hybrid systems to quickly deploy optical broadband services to gain a foothold on the market. Once consumers have an opportunity to enjoy the optical broadband speeds the market should grow, giving service providers impetus and capital to deploy fiber throughout the entire network. The existing FSO can be used as a back-up link in case of emergencies or fiber optic maintenance.

D. CASE FOR PONS

In this section, the case for deploying PON technology will be made from two perspectives: the service provider and the consumer. The service providers and the consumers both have different requirements (make money versus save money) and expectations (low deployment cost versus reliability) of the local access network. Therefore, it is logical to discuss PON advantages from these separate perspectives.

Service Providers' Case for PONs

In order for PON technology to take off in the U.S., service providers must be the first ones convinced of PON technology's advantages. Fortunately, many advantages for service providers do exist and all PON advantages lead to increased profit for the service providers. Looking at three PON characteristics can make the case for PONs from the service providers' perspective: true broadband data rates, no active components in the outside cable plant and the point-to-multipoint architecture.

As noted earlier, the primary advantage of PON technology, for both the service provider and customer, will be the ability to achieve true broadband data rates in the local access network. Some EPON equipment companies

are touting data rates in the Gbps neighborhood. With these types of data rates, service providers will be able to provide enhanced services over a future-proof access network. They will realize new revenue opportunities as they provide bundled services that include Internet access, telephone services, video services and other entertainment services. Providers will also gain a competitive advantage, especially if they are able to get an early foothold in the FTTH market. PONs can also provide service providers with a high-speed feeder system that works with other technologies, such as broadband wireless and VDSL.

The only active components in a PON system are at the CO (OLT) and the customer premises (ONT/ONU). There are no active components in the outside cable plant, which is the portion of the network running from the CO to the customer. The primary advantage of this is a significant reduction in network maintenance and equipment costs. According to study by Financial Strategies Group, LLC, provisioning and repair costs for PONs was 80% lower compared to a comparable DSL solution (Financial Strategies Group, 3). DSL systems, along with other access systems, have many active electrical components in the outside cable plant. These systems require quite a bit of preventative and corrective maintenance, which is not required for PON systems. Also, the active components are expensive to purchase and install, another reason for the cost difference. These cost savings realized by PON systems can increase profit margins for providers and/or lower consumer prices. The reduced maintenance also equates to increased reliability, which can help assure customer loyalty and decreased customer churn.

The lack of active components in PONs also reduces rights-of-way requirements. Passive optical splitters, which are about the size of a pack of gum, require very little space, especially when compared to current access networks' "cable huts". These cable huts, which need to house the active electrical components and requisite power equipment, require much more space and can delay access network deployments due to rights-of-way requirements.

The point-to-multipoint architecture is achieved through splitting the fiber that runs from the OLT with a passive optical splitter. Compared to a point-to-point fiber architecture, this can significantly reduce costs while amortizing these reduced costs amongst many customers. Overall fiber requirements are reduced, optical interfaces in the CO are conserved and the number of lasers needed is reduced. The PON architecture also provides for better scalability and increased flexibility. Customers can be added incrementally as all of the fiber from the CO to customers does not have to be laid up front. Upgrades, such as new DWDM equipment, will only affect the OLT and ONT, reducing costs for the service provider and decreasing the time it takes to make these upgrades.

Customers' Case for PONs

PONs have the capability of providing consumers with enhanced and converged services, increased reliability, increased customer satisfaction and reasonable prices for the enhanced services. PONs aim to break the local access network bandwidth bottleneck by initially providing access rates between T-1s and OC-3s (Figure 4.6). With these speeds, customers will be able to enjoy high-speed Internet

surfing, video on demand, telecommuting and a host of other bandwidth intense applications.

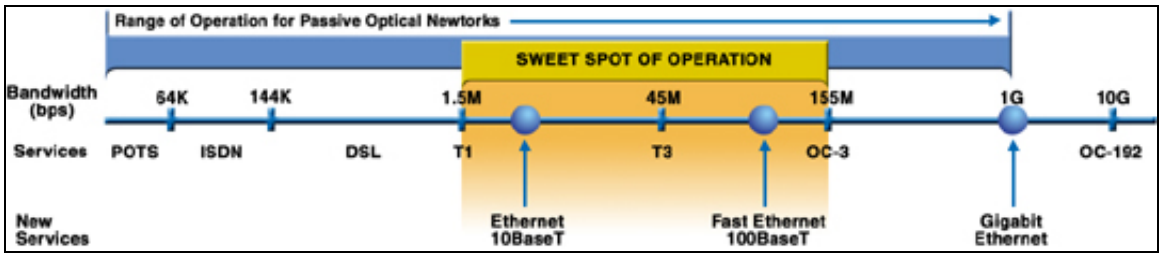

Figure 4.6 PON Data Rate Goals (From: www.alloptic.com)

PONs will also provide a means to aggregate current data, telephone and television services into one service package over one fiber. This will reduce maintenance and billing issues as well as provide one point of contact for all types of services. Customers will enjoy the reliability of PONs and thus be more satisfied with their access. Many of the problems with today's access network stem from unreliability and poor service, which are minimized by PON technology.

Example FTTH Household

Thus far, the advantages of PONs have been described in general terms. The following scenario and corresponding diagrams aim to show specific applications and advantages that a "FTTH via PON" household will enjoy over a household without FTTH (e.g. "broadband" household of today).

Today's "broadband" family generally accesses the Internet through digital subscriber line (DSL) or a cable-modem at data rates in the neighborhood of 1Mbps. These technologies are provided through the family's existing telephone line or their existing coaxial cable, respectively. Assume that the family, like a majority of today's broadband families, has cable-modem access and has signed up for this service through Company A. Fortunately,

they live in a new development where very few people have signed up for cable-modem access. For now, they enjoy data rates well over 1Mbps.

The family has three networked computers, one for the parents and one for each teenage child. At any given time there is at least one parent on-line and one child on-line. Therefore, the total bandwidth the family receives is shared between at least two users. This upsets the parents, as they cannot reasonably telecommute, and it upsets the teenagers, as they cannot download songs and movies fast enough.

The family enjoys diverse entertainment services; therefore require some sort of enhanced television service. Today, these enhanced television services, which generally consist of many high-quality channels and pay-per-view access, are provided through satellite dish or digital cable. In addition to the basic cable services, the family has chosen satellite access from Company B. Finally, the family will need an additional two telephone lines from its telephone company, Company C, as the two teenagers in the family love to talk.

In summary, the family has Internet access through a cable-modem from Company A, satellite TV from Company B and three separate phone lines from Company C. The family will have at least three separate bills and three separate companies to interact with in this scenario. Figure 4.7 is a diagram of the family’s Internet, telephone and television access situation.

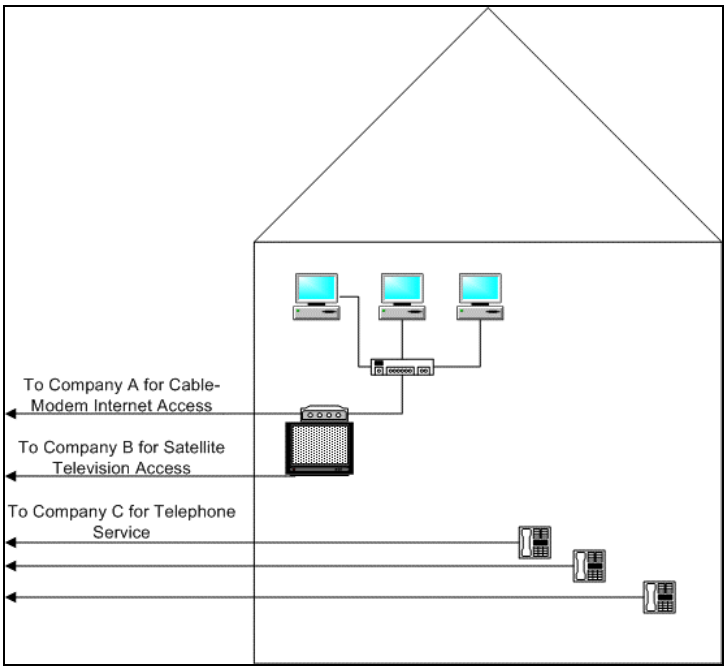

Figure 4.7 Broadband Household of Today

The same family was so upset by their access situation and services that they moved to a development that was advertising PON-based FTTH. More and more people had moved into their neighborhood and their Internet access speeds diminished five-fold. Also, they were tired of having three separate bills, which usually totaled over $200 a month. Finally, the family did not receive consistent customer services from the three companies and were unhappy about dealing with three separate companies. The new neighborhood's access was advertised at providing "potentially unlimited bandwidth, converged services and superior quality".

The new neighborhood had a single service provider that provided a single strand of fiber to each home. This single strand of fiber ran to a weatherproof access terminal (ONT) mounted on the outside of the house. The ONT was about the size of a shoebox and provided interfaces

for all of the access needs. The PON-based FTTH system provided the family with four telephone lines, Internet access, with data rates up to 100Mbps, high-definition television (HDTV) and video on demand. These services were aggregated over the single fiber running to the house. Also, the family received only one bill for all of their services and it generally totaled between $100 and $150 a month. They also enjoyed having to deal with a single company rather than several companies as they had to in their old neighborhood.

The family loved their new access situation (Figure 4.8). They could do all of the following simultaneously: talk on all four telephone lines, telecommute, download the latest songs and videos, watch HDTV or order and watch the latest movie release. The additional bandwidth for Internet access also provided the family an opportunity to enjoy on-line gaming, enhanced household security features and a neighborhood Intranet. How did they ever survive without FTTH?

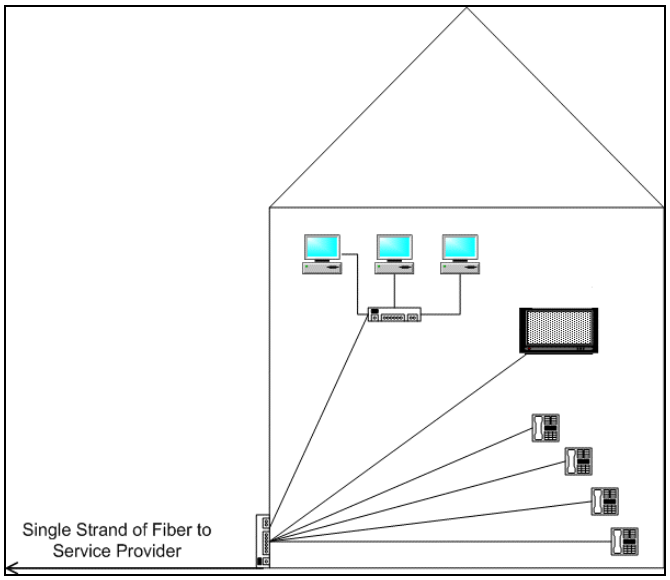

Figure 4.8 Broadband Household with FTTH

E. DISADVANTAGE OF PON SOLUTION

The primary case against PONs is the high cost of deploying fiber optics necessary for the network. A CIBC World Markets research report estimates the installation costs of fiber extensions to run anywhere $350,000 to $750,000 per fiber mile (Langowski, Sep. 2001, p. 3). Other estimates put the figure between $100,000 and $300,000. Regardless of the exact figures, the bottom line is that it is expensive to run optical fiber. This fact requires service providers to have substantial capital before embarking on PON deployment and patience to wait for their return on investment (ROI).

Fiber optic deployment is much higher in densely populated residential areas, such as downtown New York City, than in greenfield developments, such as new suburban communities. In densely populated areas, such as downtown areas, there are more streets and sidewalks to trench, more rights-of-way permits are required and labor is generally more expensive, all contributing to very high costs of laying fiber. Since many central offices are located in densely populated residential areas, the high costs of laying cable in these areas is a major factor in deploying PONs.

The high cost of laying fiber will never go away; therefore, other fiber deployment solutions need to be explored by providers wishing to use PON technology. Many of the current FTTH providers are bypassing the costly residential areas by deploying PONs in new residential developments and in rural areas. New development areas, or greenfield developments, have trenching that already exists for plumbing and sewer, so laying fiber is an obvious

choice over laying twisted-pair or coaxial cable. In rural areas, trenching costs are relatively insignificant, reducing the capital needed for PONs in these areas. However, greenfield developments and rural areas do not have the consumer base needed for service providers to enjoy quicker ROIs and a larger customer market. Money is where the people are.

Service providers may be able to enjoy the advantages of PONs by using alternate means of deploying fiber. In a study by Merrill Lynch, fiber deployment costs were reduced by as much as 60% through the use of aerial fiber or through the use of existing conduit (Ching, May 2001, p. 9). There are also hurdles with these two options, but the main point is that they provide significant cost savings as compared to trenching. Another alternative is to use FSO technology as described earlier in the chapter. FSO links can be used to get past the high-cost fiber deployment areas while still providing optical speeds.

F. CONCLUSION

PON technology seems to the best solution to achieving true broadband access in the local access network. In both FTTH and FTTx architectures, customers and service providers are able to enjoy the advantages of PON technology. The primary advantages of PON technology for customers are:

- Enhanced services
- Consolidated/converged services
- Decreased costs for services
- Consolidated billing
- More reliable services

The primary advantages of PON technology for providers are:

- Reduced maintenance costs
- Future-proof infrastructure for provider
- New revenue opportunities
- Increased scalability and flexibility

In addition to FTTx and FTTH options, service providers should consider PON/FSO hybrid solutions. These provide consumers with optical access rates while reducing costs and deployment times for service providers.

However, PONs do face a major hurdle: fiber optics deployment costs. Service providers need to explore alternative fiber optics deployment methods to reduce these costs. They also need to be forward-looking and realize that high initial deployment costs will be far outweighed by the advantages and gains realized by PON based FTTH systems.

THIS PAGE INTENTIONALLY LEFT BLANK

V. PON BUSINESS MARKET

A. INTRODUCTION

The current U.S. PON business market, in terms of PON deployments and PON equipment providers, is relatively small. PONs have not been able to take the country by storm, despite the clear advantages PONs have over any other access technology. The smaller than expected PON adoption and deployment rate is due to several factors, to include:

- The uncertainty in today's telecommunications market
- Regional Bell Operating Companies' (RBOC) reluctance to invest in wide-scale PON deployment
- High initial capital costs of PON deployment

The PON market may be struggling to take off; however, it is growing at a reasonable pace and will probably make major inroads once service providers and consumers realize the many benefits of this technology.

This chapter will discuss the current and future trends in the PON market in the U.S. An overview of the PON market, in terms of predicted growth and who will be using the technology, will be provided. Actual PON deployments will be discussed as well as the current PON equipment provider market.

B. GENERAL U.S. PON MARKET

According to a report by In-Stat/MDR, PON revenue in 2001 was $67.1 million (www.lightreading.com, Jun. 2002). In terms of user base, there were approximately 89,000 homes in the U.S. at the end of 2001 that enjoyed PON

enabled fiber to the home (Nadrowski, Jan. 2002, p. 1). The future for PON technology does look bright, though, as PON revenue is predicted to be $833.5 million in 2006 (www.lightreading.com, Jun. 2002,) and FTTH is predicted to reach 2.65 million U.S. homes (Figure 5.1) by 2006 (Nadrowski, Jan. 2002, p. 1).

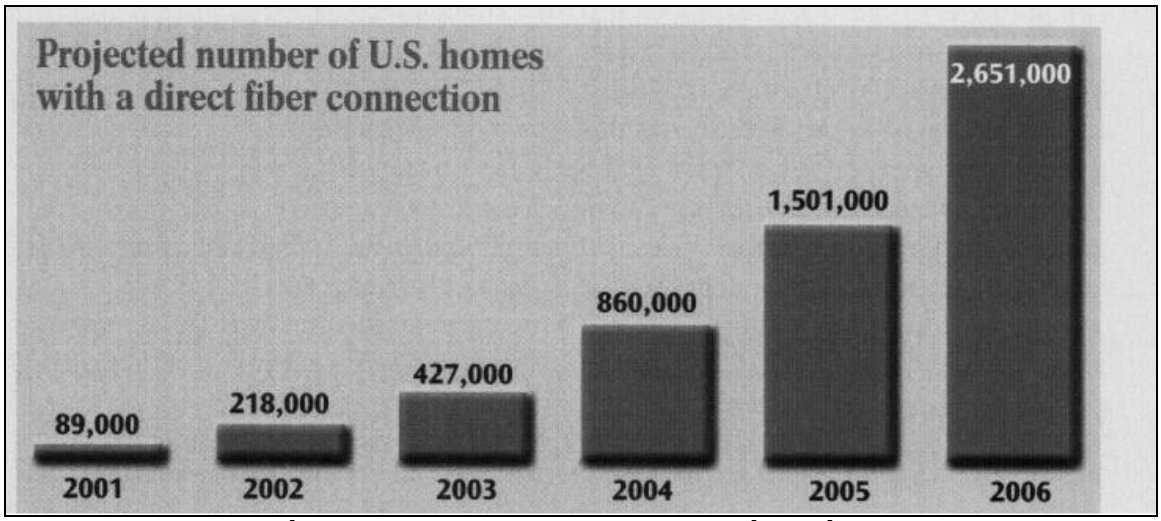

Figure 5.1 U.S. FTTH Projections (From: Weber, Oct. 2001, p. 1).

The current PON build-outs have been concentrated in greenfield areas, rural areas and small towns. Greenfield areas, which are new housing development areas, are where PON deployments currently make the most sense. In fact, it is predicted that 50 to 60 percent of greenfield developments will have FTTH in 2006 (Skedd, Feb. 2002, p. 1). Service providers are able to lay the fiber cable, which usually is over 75% of the PON costs, at virtually no cost, as the trenching already exists. New infrastructure has to be deployed anyway, so it makes sense to lay fiber. According to Optical Solutions, a PON equipment provider, fiber beats coaxial cable by about $300 a home on a typical 5000 home deployment (Lafferty, Mar. 2002, p. 3). The cost

for a system can range from $1800 to $2100 per home, which is significantly less than if trenching was not already done.

Rural areas and small communities have also been prime PON deployment areas due to their reduced trenching costs. There are far fewer streets and sidewalks, if any, to trench through in these areas, minimizing the outside cable plant labor costs. Also, many of these areas are not on the radar screen for RBOCs. Small towns and rural areas are often left out in terms of broadband access. The people in these areas realize the importance of broadband access and are not waiting for RBOCs to provide access. They see broadband access as a key to their economic future and have the motivation to get broadband to their areas. They believe a FTTH infrastructure can attract businesses and enhance the quality of life for the citizens through telemedicine and distance learning. In general, these areas are going around RBOCs and are adopting PON technology to provide their broadband access needs.

One of the primary reasons FTTH has seen such limited deployment is that the cost and return on investment for big time deployments are still in question. FTTH will probably remain a small, but growing market until large carriers can be assured of returns. However, not everyone is waiting for RBOCs, as some groundwork is being laid in several greenfield locations and small towns by small companies and organizations to include: small-town independent telephone companies, utility companies, real estate developers and local governments. These groups are able to deploy PON technology with much less risk than

RBOCs would incur and are only deploying the technology on a small scale and in limited areas.

These small companies and local governments have many advantages over RBOCs or other large-scale service providers that currently make them leaders in the PON deployment industry. FTTH is not yet economically beneficial for RBOCs or other large service providers. These companies focus on regional, not local, deployments of a technology and they are uncertain about deploying PON on a wide-scale. This uncertainty is primarily due to the high up front costs and they are not convinced that they will have a short enough return on investment timeframe. The “small guys”, however, only focus on limited areas and can accept a longer return on investment timeframe. Many of the carriers and independent telephone companies in rural areas are co-op businesses owned by the people who use their services (Weber, Oct. 2001, p. 2). Therefore, they have the ability and incentive to invest in a high cost, slow return access network. They do not have shareholders pressuring them into making money as fast as possible and can operate on a long-term basis. Figure 5.2 shows an example of how much more earnings pressure there is on a telecommunications company than a utilities company.

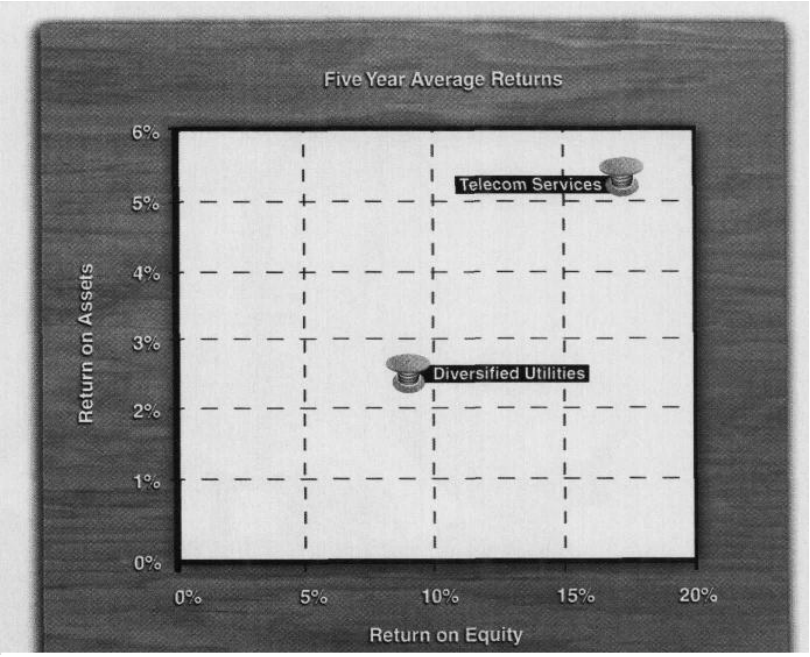

Figure 5.2 Returns Comparison (Kennedy, Jan. 2002, p. 2)

The local companies entering the PON market also enjoy local presence, political clout and brand recognition that large companies may not enjoy (Kennedy, Jan. 2002, p. 2). Obviously, having these not only helps the companies sell FTTH offerings to local customers, but more importantly they help in gaining rights-of-way access. In order to deploy PON, wide spread construction is required and this requires gaining public and private rights-of-way. Companies that are locally well known have a much easier time getting these required rights-of-way, which reduces deployment time and costs.

C. U.S. PON/FTTH DEPLOYMENTS

The U.S. PON/FTTH market is currently “centered” in greenfield developments, small towns and rural areas. This section will highlight two of the larger and more successful deployments and will also briefly discuss smaller and more recent deployment efforts. Note that the

PON deployments discussed in this chapter are not being done by RBOCs in metropolitan areas. Instead, small, independent companies are primarily deploying PON technology in small-town areas.

1. Grant County, Washington

Grant County, Washington is in the midst of a FTTH/PON build that will transform this area into one of the most broadband-rich areas in the country. The residents of this county, which has only 87,000 people and 37,000 residences and businesses, will soon enjoy high-speed voice, video and data services which were seldom thought of in this area (Keegan, Jul. 2002, p. 50). The Grant County Public Utility District (GCPUD) has been spearheading the effort since construction began on the network, called Zipp, in March of 2001. Zipp brings two dedicated fibers to each customer location, where a Gigabit Ethernet gateway should provide enough bandwidth to provide a host of high-speed services. Currently, the network's backbone is in place and 6000 homes have been passed. An additional 6000 homes will be passed this year. GCPUD plans to reach all 87,000 homes, which are spread out over approximately 5000 square miles (Shapiro, Jun. 2002, p. 1).

The utility has spent approximately $3500 per customer location and expects this cost to eventually fall to $2500 by the end of this year. These installation costs are quite high, but for GCPUD the high cost is not a major factor. Its business plan includes a 15-year capital recovery period and expects the system to return positive cash flow in six to seven years (Shapiro, Jun. 2002, p. 2).

The rapid build out has been met by rapid demand, as the GCPUD has a 34 percent market acceptance rate and

expects this rate to be over 60 percent by the time the network is complete. Customers of the service pay a one-time $300 installation fee and $40 a month for access to the network. For a cost of $9 to $25 a month, customers obtain 100Mbps Internet service from one of nine local ISPs. They receive their voice and video services from one of two local telephone companies and one of two video companies (Keegan, Jul. 2002, p. 50).

In addition to providing additional services to the county residents, the Zipp network has also provided an economic boost for the county. Three new businesses have moved to the area because of the high-speed network and the county believes this number will grow and have a significant impact on the county. County leaders estimate that with every 300 new employees, the county will enjoy a $72 million boost to the economy (Keegan, Jul. 2002, p. 50).

2. Kutztown, Pennsylvania

Kutztown, PA, like many other rural communities, seemed to be ignored by Verizon, the town's major service provider, when it came to their broadband needs. So, they took matters into their own hands and built their own $4.6 million PON-based system (Ratner, Mar. 2002, p. 4). The town consists of approximately 2230 homes and is also home to Kutztown University, home to 8000 students, which provide an alluring audience for broadband services.

The PON-based system provides customers with up to four phone lines, 100Mbps Internet access and analog/digital TV interfaces. The city is currently negotiating with an unnamed telephone provider for telephone service and with National Cable Television Coop

for television services (Stump, Mar. 2002, p. 2). The town has not set a rate for services, but pledges that it will be 10 to 20 percent than prices elsewhere.

The community sold $2 million in taxable bonds to pay for initial construction and utility payments are helping to cover costs. Once the system is in place, Kutztown officials expect to recoup the initial costs in 10 to 15 years.

Other small, rural communities have taken the same route as Grant County and Kutztown by deploying their own FTTH system. Other small communities are being serviced by local service providers or by real estate developers trying to attract homeowners. Table 5.1 provides a list of communities, developments and service providers with current and pending significant PON deployments.

Service Provider/ (Community)	Business Type	Population	Build Date
Grand County, WA PUD	County government	87,000	March 2001
Borough of Kutztown, PA	Municipality	5000+	Fall 2001
SureWest Communications (Roseville, CA)	ILEC	4000	Nov 2001
Gervais Telephone Co. (Willamette Valley, OR)	Independent Telco	5000	Dec 2001
Daniel Island Media Co. (Charleston, SC)	Developer/CLEC	2100	Jan 2002
Contractor Prop. Development Corp. (Evermoor, MN)	Developer/CLEC	1200	Feb 2002
LPGA International/ Renar Homes (Daytona Beach, FL)	Developer/CLEC	1800	Feb 2002
Rye Telephone Co. (Colorado City, CO)	Independent Telco	2000	Summer 2002
IdeaOne Telecom (Fargo, ND)	Independent Telco	172,000	July 2002
Reedsburg Utility Commission (Reedsburg, WI)	County government	8000	Summer 2002

Table 5.1 Some Current U.S. PON Deployments

D. MAJOR U.S. PON EQUIPMENT VENDORS

As with the aforementioned PON standards differences, the PON vendor scene in the U.S. is split between APON equipment vendors and EPON equipment vendors. The APON equipment vendors are generally older and larger, but the EPON equipment vendors have been making the greatest gains in the EPON market. The EPON equipment vendors have been getting more venture capitalist money and more buyers over the last year or so as this technology is picking up momentum. There are both well-known companies, such as

NEC, that have subsidiaries and recent start-ups, such as Quantum Bridge and Alloptic, selling PON equipment.

All PON vendors are optimistic when it comes to future PON deployments, despite the seemingly small projected PON footprint. Most PON equipment makers are aiming to penetrate the RBOC market in hopes that the RBOCs will use their equipment for wide-scale PON deployment. Currently the only RBOC deployment of note is by SBC. It is working with Alcatel to deploy a PON-based FTTH network in the Mission Bay development area of San Francisco. PON equipment vendors are also working with small service providers and communities in the hopes that PON technology will be enjoy wide-scale adoption through a bottoms-up approach. Companies working with communities and small service providers, such as Optical Solutions, Inc., have enjoyed success as they have a solid business plan and are not overextending themselves.

During the course of the “dot-com” rise and subsequent fall, there were many more companies competing in the FTTH market. Many companies were fed by the unfounded exuberance and dream of fiber to everywhere, but many companies did not have solid business plan. Those companies that survived this period had a sound business plan and targeted small-scale PON deployments.

Table 5.2 is a listing of some of the major U.S. PON equipment vendors that are in business today. Some of these companies were started several years ago, surviving the tumultuous telecom market, while others are relatively new to the scene and have yet to prove themselves.

Vendor	Headquarters	Type	URL
NEC Eluminant Tech.	Chantilly, VA	APON	www.eluminant.com
Quantum Bridge Communications		APON	www.quantumbridge.com
Terawave		APON	www.terawave.com
Optical Solutions, Inc	Minneapolis, MN	APON	www.opticalsolutions.com
Paceon (Mitsubishi)	Duluth, GA	APON	www.paceon.com
PureOptix	Carlsbad, CA	APON	www.puroptix.com
Worldwide Packets		EPON	www.wwp.com
OnePath Networks	Princeton, NJ	EPON	www.onepathnet.com
Alloptic	Livermore, CA	EPON	www.alloptic.com
Salira Optical Networks	San Jose, CA	EPON	www.salira.com
Luminous Networks	Cupertino, CA	EPON	www.luminousnetworks.com

Table 5.2 Major U.S. PON Equipment Providers

E. CONCLUSION

The current PON market is primarily being played out at the local level. The adoption of FTTH seems to be starting at the bottom, with small towns and small companies deploying PONs. RBOCs and other major service providers are unwilling to front the capital necessary for a wide scale PON deployment, especially in today's uncertain telecommunications market. Also, these companies are not convinced that demand for services provided by FTTH are being demanded by consumers and therefore they will not see a quick enough return on investment. However, as smaller companies continue to deploy PON technology and more consumers sign up for FTTH services, RBOCs will be forced to take note and begin to move into the market. Once that occurs, FTTH should see widespread deployment.

Communities, utility companies, developers and

independent telephone companies have realized that PON technology is best way to go for local access. They have some unique advantages that allow them to enter the PON market without the same concerns and risks that a large company may have. They also do not have the pressure of Wall Street and can work on a timetable that is consummate with PON deployment.

Whether it is a small company or an RBOC that deploys a PON, the first one to market will have a great advantage. It will be almost impossible to uproot any FTTH service provider, as FTTH provides a future-proof network that can provide all of a consumer’s access needs. It will be difficult, if not impossible, for market latecomers to unseat first movers in the PON market.

VI. REGULATORY FACTORS INFLUENCING PON/FTTH DEPLOYMENT

A. INTRODUCTION

Thus far, two important factors that influence the success of Passive Optical Networking (PON) deployments in the U.S. have been discussed: technology and business markets. Both of these are vital to the wide spread deployment of PONs. Deployment costs will decrease and network performance will increase as PON technology continues to improve. These cost decreases and performance increases will provide more incentives for service providers to deploy PON technology and incentives for customers to use PON technology. PON-related businesses, whether they are service providers deploying the technology or PON equipment providers, are vital in getting PON-based Fiber To The Home (FTTH) systems out to the consumers. These businesses are and will be the interface between customers and PON and play a major role in compelling customers to use PON technology.

Government policies are another major factor in achieving FTTH with PON technology. Government policy, which can be implemented through regulations, laws, tax incentives and loans, may be the primary factor that determines the success or failure of PON-based FTTH deployments. Regardless of how good the technology may be or how sound business models may be, if laws and regulations hinder or do not support FTTH deployment, then PON-based systems will not succeed. The current U.S. administration and Congress have been and are working on a

national broadband strategy, which could accelerate the use of PONs for FTTH.

This chapter will discuss some of the more influential regulatory factors that will affect wide-scale PON deployments. Also, possible changes that need to be made in order to promote and accelerate PON/FTTH adoption will be presented.

B. REGULATORY FACTORS INFLUENCING PON/FTTH DEPLOYMENT

1. Unbundling and Resale Regulations

The Telecommunications Act of 1996 mandated unbundling of local loops and other network elements (Jayant, 2002, p. 10), which would then be sold to potential competitors at wholesale prices. The goal of this requirement was to stimulate competition for the Incumbent Local Exchange Carriers (ILECs) (e.g. SBC, Verizon, Qwest) by permitting new competitors, such as Competitive Local Exchange Carriers (CLECs) (e.g. McLeodUSA Inc., Covad Communications), a way to provide telephone service without having to incur the costs and risks of building their own facilities. The alternative to unbundling would be facilities-based competition, which would probably provide the best competitive landscape. However, facilities-based competition was and has been stifled by the unbundling requirements of the Telecommunications Act of 1996 and the large amount of initial capital required.

These unbundling and resale regulations apply to both telephone service and data services. A broadband competitor, such as a DSL provider, provides the end facilities and equipment (e.g. DSL modem and DSL Access Multiplexer), while the ILEC provides the copper wires in the local loop. The CLEC has complete freedom to select a

particular DSL technology, allowing the CLEC to provide services that may not be offered by the ILEC. By allowing differentiation of services competition can be increased and ILECs may be motivated to provide enhanced services themselves.

Since the Telecommunications Act of 1996 has been enacted, there have been hundreds of CLECs that have come and gone. The goal of increased competition does not seem to have been met. In fact, several ILECs consolidated and there are fewer ILECs today than when the Act became law. However, the unbundling requirements remain and seem to play a major role in PON/FTTH deployments. Many of the ILECs argue that they have little incentive to upgrade their infrastructure with PON due to the unbundling and resale rules. They are unwilling to use their own capital and take on the tremendous risks for a new infrastructure if their competitors are able to have access to this new infrastructure at wholesale rates.

Judging by the current telecommunications landscape, it seems that the unbundling rules do not provide a more competitive landscape and instead are hindering the deployment of advanced broadband networks. The ILECs, in addition to a few national cable providers, are some of the only companies that have the capital and national reach needed for wide-scale PON deployment. However, the current unbundling rules seem to undermine any incentive the ILECs may have to replace the existing copper local-loop infrastructure with fiber.

There is an effort in Congress to change this rule of the Telecommunications Act of 1996. The House of Representatives passed the Internet Freedom and Broadband

Deployment Act of 2001 (see Table 6.1) on the 27th of February of this year (Shiver, Jul. 2002, p. 1). The bill is currently fighting an uphill battle in the Senate. One of the provisions of the bill would eliminate the unbundling and resale rules of the Telecommunications Act of 1996 by prohibiting the FCC and each state from regulating any high-speed data services. The rules would still apply to telephone service, thus keeping the door open for increased competition in the telephone service market.

Many argue that this change would reduce competition in the data services arena, putting these services in the hands of a few large companies. However, the new act also requires each ILEC to upgrade their infrastructure to provide broadband services within five years. As the ILECs provide more broadband services, cable companies and other service providers will be forced to upgrade and extend their broadband services to compete. This should increase competition, improve quality and reduce costs for consumers. Also, many of the ILECs would probably upgrade much of their infrastructure to PON technology. The overall deployment costs would not be significantly greater than DSL deployment costs and the ILECS would be able to reduce maintenance costs while deploying a future-proof network.

2. Rights-of-way Access

State and local policy makers also have a significant impact on the deployment of PON/FTTH networks. It is at these levels that rights-of-way policies can have the most impact. As businesses become more reliant on the Internet and other telecommunications services, an up-to-date

communications infrastructure is becoming more and more of a factor in the economic development at the state and local level. Communities and states, especially rural ones, need advanced services in order to compete with metropolitan areas for businesses and people.

As discussed earlier, broad rights-of-way access is required for wide-scale PON deployment. Service providers cannot deploy their PONs if they cannot access the poles and conduits needed for the fiber and equipment. The new fiber required for the network needs to go somewhere and often the state or local government controls this “somewhere”.

Currently, local governments have a relatively tight control on these rights-of-way and can make it difficult for providers to enter the PON market. The process for gaining rights-of-way access can be cumbersome, slow and costly, causing the potential service provider to look elsewhere. The state and local governments would probably be better off loosening their rights-of-way access requirements. Service providers looking to deploy PON technology would have one less hurdle to overcome and the local areas would enjoy the enhanced services provided by PON technology.

The state and local governments can also influence private rights-of-way issues. Utility companies and railroad companies also control rights-of-way and sometimes have seemingly unnecessary restrictive access to them. State and local governments can use their power to open up this access, providing service providers with more alternatives and fewer hurdles for deploying PONs.

3. Financial Incentives

From large companies' perspectives, financial incentives, such as tax credits and low-interest loans, are probably the most eye-catching regulatory factor in broadband deployment. Any financial incentives provided by the government would help offset the capital and some risk involved with the deployment of a PON infrastructure.

Financial incentives are not a hurdle to PON deployments, as the previously mentioned factors may be. They are a way to motivate companies to deploy PON systems. Companies would be able to use the tax breaks or low-interest loans to offset costs involved with the deployment of a new infrastructure. Currently there are several bills in Congress that aim to provide financial incentives to companies deploying advanced broadband services (Table 6.1).

4. Consumer Demand

The government's role in consumer demand for broadband services may not be readily apparent. Market forces generally influence demand for a product or service, not the government. In the case of broadband services, however, the government can influence consumer demand for broadband services in two ways: putting more government services on the Internet and making changes to the copyright laws.

The government can provide "compelling content" to U.S. consumers by having more government-related information on the Internet and by allowing citizens to perform required government-related tasks, such as renewing driver's licenses or doing taxes, over the Internet. The government could also increase demand for its own employees

by taking the lead in telecommuting. Local and national agencies could provide government employees more opportunities to do some or all of their work over the Internet. This telecommuting push on the part of the government could spill over into the private sector, adding to the demand for high-speed services.

According to Michael Powell, chairman of the Federal Communications Commission (FCC), broadband intensive content is in the hands of major copyright holders, especially music and movie companies (Powell, Oct. 2001, p. 2). These companies understandably fear Internet piracy and are withholding compelling content that could substantially boost the demand for FTTH. The government's role in this area is twofold. It could assist in research efforts that would lead to anti-piracy technologies, alleviating the fears of the companies. The government could also review the current copyright laws and see what can be done to align them with today's digital world. Ultimately, the companies need to be assured compensation for their works, but should not have to power to control the deployment of PON technology.

C. CONCLUSION

The government plays a major role in the wide-scale deployment of PON technology. They have the means to enact and enforce regulations that can provide incentives for service providers to deploy high-speed data services. They also have the means to increase consumer demand and reduce friction for service providers. However, once the roll-out of FTTH has begun and a fair, competitive market exits, all levels of government should minimize their influence and

let competition and the markets shape the broadband landscape.

Name of Bill	Major Provisions	Date Introduced
Consumer Broadband Deregulation Act	-Reduce regulations restricting the ability of established local phone companies to offer long-distance broadband services to residential consumers	01 Aug 02
National Broadband Strategy Act of 2002	- Requires the President to submit to Congress a strategy for the nationwide deployment of high speed broadband Internet telecommunications services	05 Jun 02
Broadband Regulatory Parity Act of 2002	- Provide parity in regulatory treatment of broadband service providers	30 Apr 02
Broadband Telecommunications Act of 2002	- Focuses on rural communities - Low interest loans and grants - Authorize studies and projects to explore broadband technologies	2 May 02
Broadband Deployment and Telework Incentive Act of 2001	- Provide incentives for telecommuting arrangements	23 Jul 01
Broadband Deployment and Competition Enhancement Act of 2001	- Facilitate the deployment of broadband services	28 Jun 01
Internet Freedom and Broadband Deployment Act	- Deregulate high-speed data services	24 Apr 01

Table 6.1 Key Broadband Related Congressional Bills

VII. SUMMARY/CONCLUSION

The local access loop is the primary bottleneck in achieving high-speed networking access for the consumer. The last-mile of today primarily relies on systems and infrastructures that were not designed for the transport of digital data. As a result, consumers are unable to enjoy the full potential of the Internet and generally do not have access to enhanced services such as enriched multimedia services, converged voice, video, and data services and high-speed Web browsing.

This thesis has shown that Passive Optical Networking (PON) is an effective means to provide U.S. consumers with true broadband last-mile access. The technologies currently being used may be sufficient for today's needs, but they do not provide the requisite last-mile end state for consumers, which should consist of one high-speed network that transports voice, video and data. Today's technologies, such as digital subscriber line, cable-modem Internet access, satellite access and wireless solutions. However, they do not provide true broadband access that PON can provide. With PON based FTTH systems, consumers are able to receive advanced voice, video and data needs over one line.

There are three primary areas that have and will have an impact on the successful deployment of PON based FTTH systems in the U.S.: the development of PON technology, the PON business market and the U.S. regulatory environment. PON technology has rapidly matured in the last several years, reducing equipment costs and increasing the practicality of PON deployment. There are currently

two competing PON technologies that have fueled PONs maturation: Asynchronous Transfer Mode (ATM) PONs and Ethernet PONs. Both of these technologies provide high-speed broadband access, but achieve it in different ways.

The International Telecommunications Union – Telecommunications Standardization Sector (ITU-T) G.983 standards are the only recognized PON standards and are based on ATM PON technologies. Therefore, ATM PONs are ahead of Ethernet PONs in terms of technology maturity, adoption rates and overall FTTH deployments. However, Ethernet PONs have been building momentum and are on their way to becoming an IEEE standard. An Ethernet PON standard should bring Ethernet PONs to the same level as ATM PONs and increase competition between the two PON technologies. As competition increases, overall PON equipment should improve while costs decrease.

The PON business market can be divided into two categories: PON equipment providers and service providers deploying PONs. There are approximately a dozen major U.S. PON equipment providers in today’s market. During the Internet hype of the late 1990’s, there were many more PON equipment companies, but as the bubble burst, companies without a sound business plan fell out of the race. The companies that survived and those that recently started are focused on providing their customers, who are generally service providers, with complete, end-to-end PON based FTTH solutions. The ATM PON equipment providers tend to be older and have a larger customer base, while the Ethernet PON companies are smaller but are growing more rapidly in size and in the number of companies.

The current PON deployment market is dominated by relatively small companies, communities, or utility companies deploying PON based FTTH systems in rural areas, small municipalities and greenfield developments. One of the disadvantages of a PON infrastructure is the high cost of fiber deployment (e.g. trenching, rights-of-way permits, etc.). However, these costs are usually less in rural areas, small towns and greenfield developments, thus making PON deployments more cost-effective for the providers and the customers in these areas. Also, many of these areas realize the importance of advanced telecommunications services and see FTTH as a way to attract businesses and residents. Thus far, these PON deployments have been a success for both the service providers and the customers receiving the advanced services. However, these small companies do not have the capital or reach to provide wide-scale, national PON deployments.

In order for PONs to be deployed on a wide-scale basis, large companies with the necessary capital, such as the Incumbent Local Exchanges (ILECs) or major cable providers, need to adopt PON technology . These companies generally focus on regional or national deployments of technologies and do not feel comfortable with PON technology’s high deployment costs, especially in metropolitan areas. These companies are also hampered by the lengthy return on investment of PON systems, uncertainty in today’s telecommunications market and regulations that may stifle the deployment of an advanced infrastructure. However, some Baby Bells are looking at PONs for future infrastructure enhancements and potential

wide-scale deployments, which should spur nationwide PON deployments.

The primary regulatory factors affecting PON deployments are unbundling and resale requirements, rights-of-way regulations, regulations affecting consumer demand and financial incentives from the government. Many of the current rules and regulations apply to the original telephone and cable system and are trying to catch up to today's technology. The aforementioned regulatory factors should be taken into consideration by local, state and national government agencies in determining appropriate rules and regulations for broadband deployments.

Overall, PON deployments in the U.S. should continue to increase as the technology continues to mature, decreasing equipment costs, and consumers began to experience the enhanced services provided by PON based systems. The "grassroots" deployments (e.g. rural areas, greenfield developments) will be the primary areas of success for PON technology in the near future. However, as the momentum builds from the bottom up, large service providers will begin to take notice and begin their own large-scale deployment efforts. Once PONs are deployed on a national basis, the last-mile should not be the access bottleneck as it is today.

BIBLIOGRAPHY

About Us. 4 May 2002 http://www.ftthcouncil.org/about.htm.

Allen, Mike and Jonathan Krim. "High-Speed Internet Access Gets White House Spotlight; Bush to Discuss Plans to Promote Availability." *The Washington Post* 13 Jun. 2002 13 Aug. 2002 http:proquest.umi.com.

Allen, Doug. "The Second Coming of Free Space Optics." *Network Magazine* Mar. 2001: 55-60.

Asynchronous Transfer Mode (ATM) Passive Optical Networks (PONs) 4 Feb. 2002 http:www.iec.org.

Balachandran, Shri. "Passives get Active." *Spie's Oemagazine* Aug. 2001: 30-33.

Boer, I.R. and I.H. Rood. *Fiber-to-the-Home/Curb Technology Assessment(TA)* 29 Aug. 2001 http:www.gigaport.nl/ne/network/access/doc/ftthc.pdf.

Brown, Eric S. *Broadband Walks the Last Mile* 5 Jun. 2001 http:www.technologyreview.com/articles/brown060501.asp?p=0.

Ching, Michael and Tal Liani. "Passive Optical Networks." *Merrill Lynch Research Paper* 15 May 2001.

Ciciora, Walter S. "The Cable Modem Traffic Jam" *IEEE Spectrum* Jun. 2001 3 Feb. 2002 http://proquest.umi.com.

Costigan, Paul. "Comment: Unlocking the Promise of Broadband at Home." *Electronic News* 22 Oct. 2001 17 Jan. 2002 http:proquest.umi.com.

Dornan, Andy. "Seeing Through the Clouds." *Network Magazine* Jul. 2001: 90.

Effenberger, Frank J., Hiroshi Ichibangase, and Haruo Yamashita. "Advances in Broadband Passive Optical Networking Technologies." *IEEE Communications Magazine* Dec. 2001: 118-124.

Ethernet Passive Optical Networks. 10 Jan. 2002 http:www.iec.org.

Finneran, Michael. "New Options for the Optical Edge." *Business Communications Review* Mar 2002 26 Mar. 2002 http:proquest.umi.com.

Financial Strategies Group, LLC. *Business Case Analysis Comparing Passive Optical Networking (PON) Technology and xDSL, Broadband Wireless, Multi-Service SONET/SDH Rings, and Multi-service SONET/SDH Point-to-Point* Jun. 2001.

Fitchard, Kevin. "The Broadband Household." *Telephony* 12 Nov. 2001. 17 Jan. 2002 http:proquest.umi.com.

First-Mile Ethernet Building Steam. 15 Mar. 2002 http://www.lightreading.com.

Franklin, Curt. *How DSL Works*. 8 May 2002 http:www.howstuffworks.com/dsl.htm.

Franklin, Curt. *How Cable Modems Works*. 23 May 2002 http:www.howstuffworks.com/cable-modem.htm.

Gattuso, James. "The Tauzin-Dingell Telecom Bill: Untangling the Confusion." *High-Speed Internet Access* Apr. 2002 2 Jun. 2002 http://proquest.umi.com.

Greenfield, David. *The Essential Guide to Optical Networks.* New Jersey: Prentice Hall PTR, 2001.

Hansell, Saul. "Demand Grows for Net Service at High Speed." *The New York Times* 24 Dec. 2001 17 Jan. 2002 http://proquest.umi.com.

Hardy, Quentin. "The Great Wi-Fi Hope." *Forbes* 18 Mar. 2002 6 Mar. 2002 http:proquest.umi.com.

Hearn, Ted. "Breaux, Nickles Team on Data Bill." *Multichannel News* 6 May 2002 13 Aug. 2002 http:proquest.umi.com.

Huttle, William. *Cable Modems and Hybrid Fiber Coax Systems*. Jul. 1998 http:www.nswc.navy.mil/cosip/aug98/osa0898-1.shtml.

Jander, Mary. *Fiber to Home: Dream Deferred?.* 7 Feb. 2002 http:www.lightreading.com.

Jayant, Nikil et al. *Broadband Bringing Home the Bits*. Washington, D.C.: National Academy Press, 2002.

Keegan, Donna. "Great Needs, Unique Advantages." *Opastco Roundtable* Jul. 2002: 50-51.

Kennedy, Michael. "Utilities Go the Last Mile." *Telecommunications Americas* Jan. 2002 8 Feb. 2002 http:proquest.umi.com.

Kirby, Rob. "PON Progress Report – Operating on RBOC Time." *Network Magazine* 5 Jun. 2002: 68-71.

Lafferty, Michael. "FTTx: An Unreal Reality Takes Shape." *Communications Engineering and Design* Mar. 2002 1 May 2002 http:www.cedmagazine.com/ced/2002/0302/03a.htm.

Lafferty, Michael. "FTTH Starts Making House Calls." *Communications Engineering and Design* Mar. 2001 4 Feb. 2002 http:www.cedmagazine.com/ced/2001/0301/03a.htm.

Langowski, Angela. "Clean and Clear." *Communications Engineering and Design* Sep. 2001 4 Feb. 2002 http:www.cedmagazine.com/ced/2001/0901/id2.htm.

Lessig, Lawrence. "Who's Holding Back Broadband?." *The Washington Post* 8 Jan. 2002 17 Jan. 2002 http:proquest.umi.com.

Liu, Zheng-Yang. "Fiber Fight: Ethernet Duels ATM for Home Access." *Communication Systems Design* 1 Mar. 2002 10 Jul. 2002 http:www.commsdesign.com.

Lemke, Tim, and Donna De Marco. "Cable, DSL or Satellite?." *Insight on the News* 17 Dec. 2001 17 Jan. 2002 http:proquest.umi.com.

Maeda, Yoichi, Kenji Okada, and Dave Faulkner. "FSAN OAN-WG and Future Issues for Broadband Optical Access Networks." *IEEE Communications Magazine* Dec. 2001: 126-132.

Nadrowski, Rebecca. “New Forecasts for Worldwide Optical Fiber and Fiberoptic Cable Markets.” 24 Jan. 2002 2 Aug. 2002 http://www.panapress.com/newswire.asp?code=56.

Pesavento, Gerry and Mark Kelsey. *Gigabit Ethernet Passive Optical Networks.* 1 May 2002 http:www.alloptic.com/grfx/press/articles/gigethernet/GigethernetPON.htm.

PON Believers Hang Tough. 28 Jun. 2002 http:www.lightreading.com.

Powell, Michael K. “Remarks of Michael K. Powell at the National Summit on Broadband Deployment.” 25 Oct. 2001.

Ratner, Andrew. “Shoofly pie, and Broadband, too.” *The Baltimore Sun* 10 Mar. 2002 2 Aug. 2002 http:www.opticalsolutions.com.

Robinson, Michelle. “Tackling the Last Mile without Falling Off the Edge.” *Boardwatch* Sep. 2001 8 Feb 2002 http:proquest.umi.com.

Rysavy, Peter. “MMDS Struggles to Find a Foothold.” *Network Computing* 29 Oct. 2001 17 Jan. 2002 http:proquest.umi.com.

Schell, Martin. “Selecting the Right PON Technology for Video: A Primer.” *Fiberoptic Product News* May 2002 10 Jul 2002 http:proquest.umi.com.

Shapiro, Mitch. “Fiber-to-the Farm.” 8 Jun. 2002 http://www.broadbandmarkets.com/articles/FTTPfarmLTW701.htm.

Shiver, Jube. “Firm may be in for a Grilling on Capitol Hill.” *The Los Angeles Times* 1 Jul. 2002 5 Aug. 2002 http://www.sunspot.net/business/bal-wgrilling01.story?coll=bal-home-headlines.

Skedd, Kirsten. “Master Planned Communities to Provide Showcase for Leading-Edge Broadband Technologies.” 12 Feb. 2002 2 Aug. 2002 http://www.mzdnet.com/press.asp@ID=77&sku=IN020424RC.

Stump, Matt. “Kutztown, Pa., Muni has lots of Fiber.” 25 Mar. 2002 10 Jun. 2002 http://www.broadbandweek.com/news/020325/020325_cable_muni.htm.

Sweeney, Dan. “Fiber in the First Mile?.” *America’s Network* 1 Jun. 2001 8 Feb 2002 http:proquest.umi.com.

Terrawave Communications. *A Whitepaper on Next Generation Passive Optical Networks* Jan. 2001.

Tyson, Jeff. *How VDSL Works*. 8 May 2002 http:www.howstufworks.com/vdsl.htm.

Two PON Draft Global Standards get Green Light from ITU. 11 Jan. 2002 http:www.broadband.globalsources.com/MAGAZINE/BB/0201/BN112901.HTM.

Weber, Toby. “FTTH Catches on with Independents.” *Telephony* 1 Oct. 2001 8 Feb. 2002 http:proquest.umi.com.

Willebrand, Heinz A. “New Roles for Free-Space Optics.” *Broadband Wireless Online* Feb. 2002 25 Jul. 2002 http:www.shorecliffcommunications.com.

Wilson, Carol. “Small Towns, Big Fiber.” *America’s Network* 1 Jul. 2002 2 Aug. 2002 http:www.opticalsolutions.com.

Wrede, Doug. “Developer Puts Faith in Fiber.” *National Association of Home Builders* Winter 2002: 8-10.

Wrede, Doug. “A Business Case for Fiber-to-the-Home.” 15 Aug. 2002 http:www.opticalsolutions.com.

Yaojun, Qiao, et al. “Frame Structure and MAC Protocol of ATM-Based PON System.” *Communications* 1999: 50-52.

Question of the Day. 23 May 2002 http:www.howstuffworks.com/question606.htm.

THIS PAGE INTENTIONALLY LEFT BLANK

INITIAL DISTRIBUTION LIST

1. Defense Technical Information Center
   Ft. Belvoir, Virginia

2. Dudley Knox Library
   Naval Postgraduate School
   Monterey, California

3. Marine Corps Representative
   Naval Postgraduate School
   Monterey, California

4. Director, Training and Education, MCCDC, Code C46
   Quantico, Virginia

5. Director, Marine Corps Research Center, MCCDC, Code C40RC
   Quantico, Virginia

6. Marine Corps Tactical Systems Support Activity (Attn: Operations Officer)
   Camp Pendleton, California