AFFDL-TM-73-47-FXN

AIR FORCE FLIGHT DYNAMICS LABORATORY
DIRECTOR OF LABORATORIES
AIR FORCE SYSTEMS COMMAND
WRIGHT PATTERSON AIR FORCE BASE OHIO

THE DEVELOPMENT OF A COLD WATER DEAERATOR FOR USE IN THE AFFDL 50 MEGAWATT ELECTRO-GASDYNAMIC FACILITY

Wiley C. Wells

and

Joseph M. Hample

Reproduced From
Best Available Copy

April 1973

Air Force Flight Dynamics Laboratory
Wright-Patterson Air Force Base, Ohio

Approved for public release; distribution unlimited.

20000509 144

AFFDL-TM-73-47-FXN

THE DEVELOPMENT OF A COLD WATER DEAERATOR FOR USE IN THE AFFDL 50 MEGAWATT ELECTRO-GASDYNAMIC FACILITY

Wiley C. Wells

and

Joseph M. Hample

April 1973

Air Force Flight Dynamics Laboratory
Wright-Patterson Air Force Base, Ohio

Approved for public release; distribution unlimited.

SUMMARY

The requirements for removing dissolved oxygen in the arc heater cooling system of the 50 Megawatt Electrogasdynamic Facility are summarized. A detailed description of the cold water deaerator system developed by the Air Force Flight Dynamics Laboratory to satisfy these requirements is presented along with a measure of the effectiveness of the unit.

This Technical Memorandum has been reviewed and is approved.

Donald J. Harney

for PHILIP P. ANTONATOS
Chief, Flight Mechanics Division
Air Force Flight Dynamics Laboratory

TABLE OF CONTENTS

SECTION TITLE	PAGE
List of figures	iii
Introduction	1
Deaeration Processes	2
Cold Water Deaeration	3
Application	8
Effectiveness	11
J-W Deaerator Components	12
References	16

LIST OF FIGURES

FIGURE NUMBERS	TITLE	PAGE
1.	Phase I - Operating Cycle	4
2.	Phase II - Operating Cycle	5
3.	Phase III - Operating Cycle	6
4.	Phase IV - Operating Cycle	7
5.	High Pressure Water System	9
6.	Photo of Deaerator Installation	10
7.	J-W Deaerator Tank	13
8.	Electrical Schematic	14
9.	J-W Deaerator Assembly	15

INTRODUCTION

The cooling requirements for an electric arc heated gasdynamic test facility such as the Air Force Flight Dynamics Laboratory 50 Megawatt Facility are stringent and conflicting. In addition to the normal cooling requirements for high heat transfer rates and minimal corrosion, the conditions imposed by the high heat fluxes and high voltages, which are characteristic of arc heaters, require a maximum ground path resistance through the arc heater coolant. This is to prevent excessive current leakage and possible destruction of the cooling system. In order to meet these requirements the 50 Megawatt Facility arc heater is cooled with demineralized water. It is well known that in an immersed system at moderate temperatures the corrosion rate of iron is almost proportional to the oxygen concentration. Demineralized water is acknowledged to be extremely aggressive under these conditions, therefore some means of immobilizing or eliminating the dissolved oxygen in the demineralized water system is an absolute necessity. This report describes the Mechanical Deaerator developed for this purpose for the 50 Megawatt Facility.

DEAERATION PROCESSES

Deaeration of water can be accomplished by either chemical or mechanical processes.

Experience in the AFFDL 4 Megawatt Electrogasdynamic Facility, which uses an electric arc heater, showed that the reactions of chemical oxygen scavengers such as hydrazine (N_2H_4) or sodium sulphite (NA_2SO_3) with the dissolved oxygen produced compounds which are harmful in electric arc heater applications. It is known that at elevated temperatures hydrazine decomposes and produces ammonia which might lead to stress concentration cracking of the copper components in the system should any oxygen (O_2) be present. The sodium sulphate (NA_2SO_4) formed when sodium sulphite reacts with dissolved oxygen is a strong electrolyte and as such is highly conductive.

In general, mechanical deaeration is accomplished by heating water to its boiling point and venting the liberated gas. This process is impractical for use in a cooling system because it would impose an extra (unproductive) heat load on the system. Cold water deaeration, while less common, approaches the efficiency of the hot method without imposing the extra heat load. For this reason cold water mechanical deaeration is considered the method most applicable for removing dissolved oxygen under the conditions identified with electric arc heater cooling systems.

COLD WATER DEAERATION

Prior to procuring a cold water deaerator for use in the 4 Megawatt Electrogasdynamics Facility, a survey was made of available commercial units. All but one were packed-tower, vacuum deaerators, which are tall and relatively expensive. The exception was a deaerator built by the Amcodyne Corporation using the C. I. Baker process (Reference 2).

The C. I. Baker process is applicable to any closed cold or hot water system. From Henry's Law it is known that the solubility of air is proportional to its partial pressure. C. I. Baker developed a process whereby the pressure on the fluid in a closed volume is reduced to the partial pressure of the dissolved air by mechanical means instead of by adding heat. The process is simply that of filling a tank with water, sealing the tank, pumping the water out to create a boiling point vacuum and purging the liberated gases by refilling the tank.

For the 50 Megawatt Facility, a survey of available commercial equipment disclosed that the only known source for Baker process deaerators was no longer producing them. As a result the J-W deaerator was designed and built based on the C. I. Baker process. Figures 1 through 4 describe how this process is applied in the J-W deaerator system.

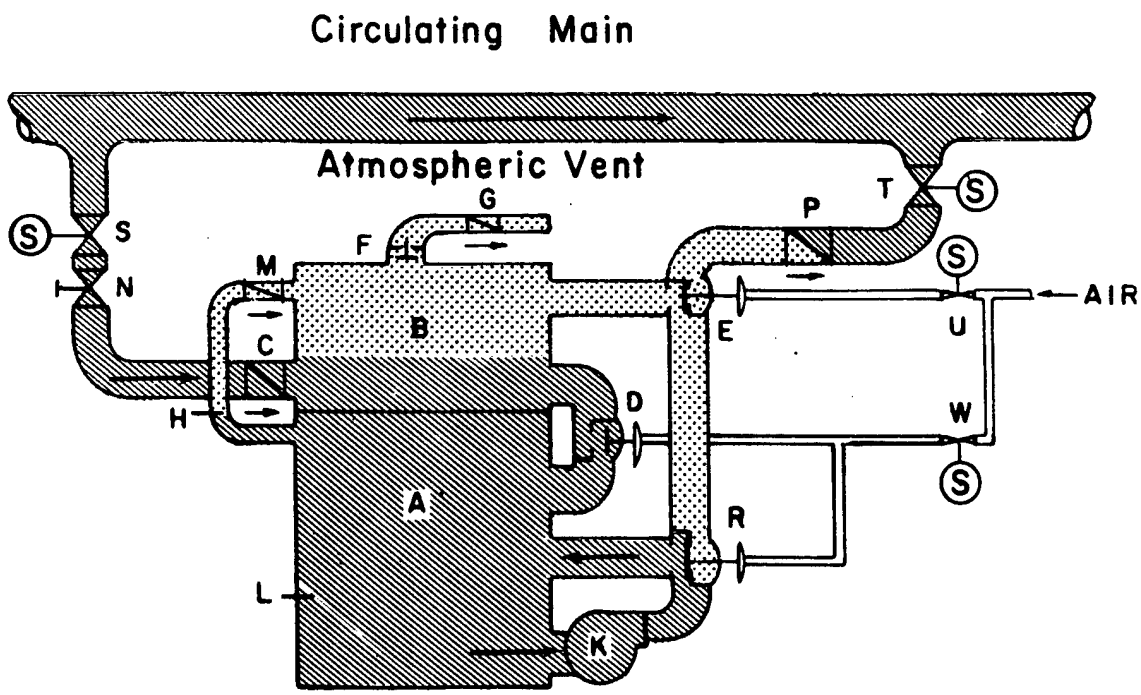

The cycle starts by starting pump (K) and opening solenoid controlled valves (S) and (T). Throttle inlet valve (N) is opened allowing water from the circulating main to enter the unit through check valve (C). Water in lower section (A) is circulated by pump (K) through valve (R). When water reaches electrode (H), solenoid valve (W) is actuated closing diaphragm valve (D) and switching the flow path through diaphragm valve (R).

FIGURE 1. PHASE I - OPERATING CYCLE

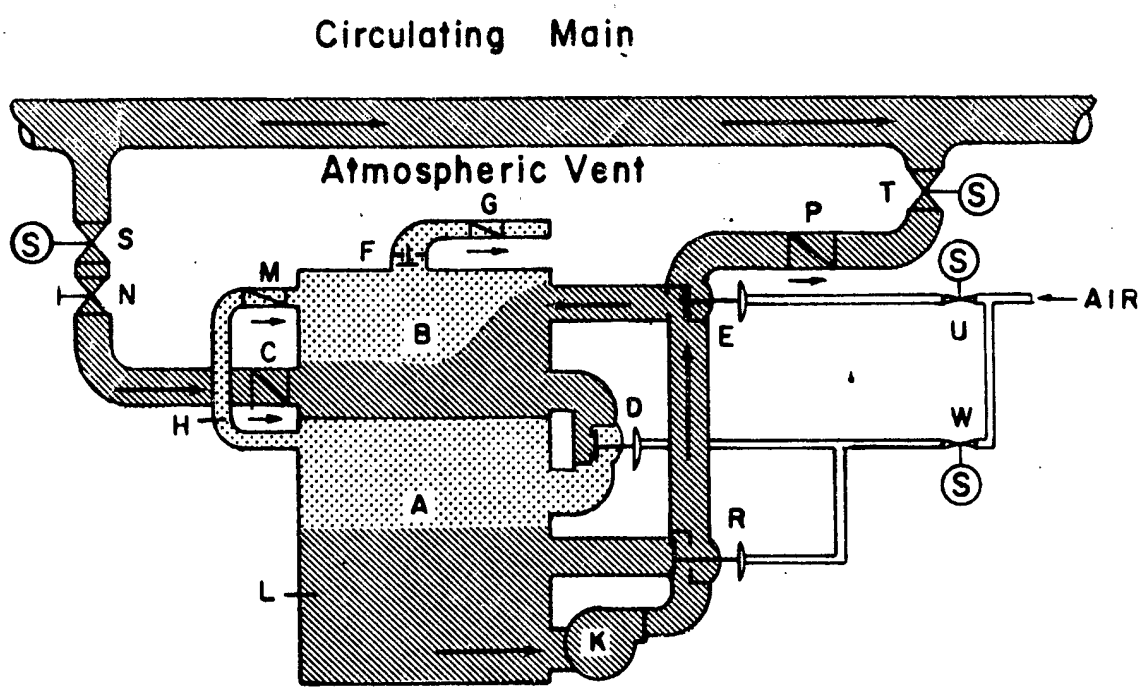

The pump (K) discharges to upper section (B) through flow control valve (E). The displacement of the water from the filled and sealed lower section (A) creates an immediate vacuum causing the release of dissolved gases from the water. Pump (K) continues to operate, displacing gases in upper section (B) to the atmosphere through vent checks (F) and (G).

FIGURE 2. PHASE II - OPERATING CYCLE

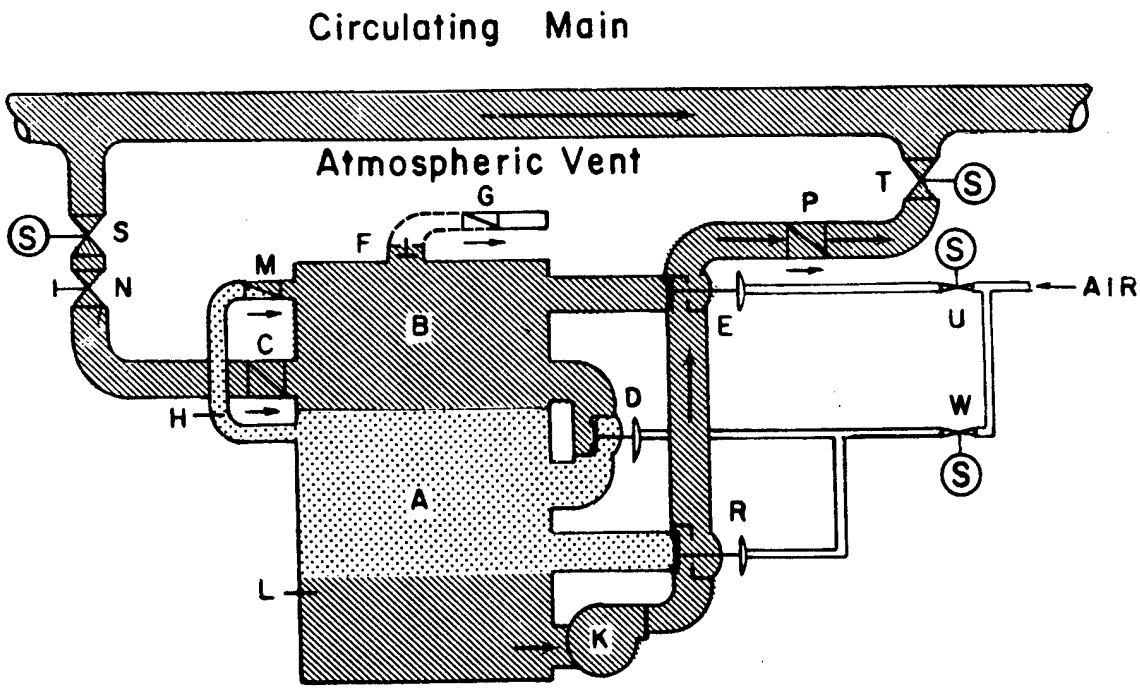

Kinetic energy of water action closes vent check (F) causing the pressure-activated solenoid valve (U) to pass air to the diaphragm actuated flow control valve (E) to divert the remaining deaerated water from section (A) back to the circulating main through check valve (P). The pump continues to deliver deaerated water back to the system until the water level reaches lower electrode (L), de-energizing solenoid valve (W).

FIGURE 3. PHASE III - OPERATING CYCLE

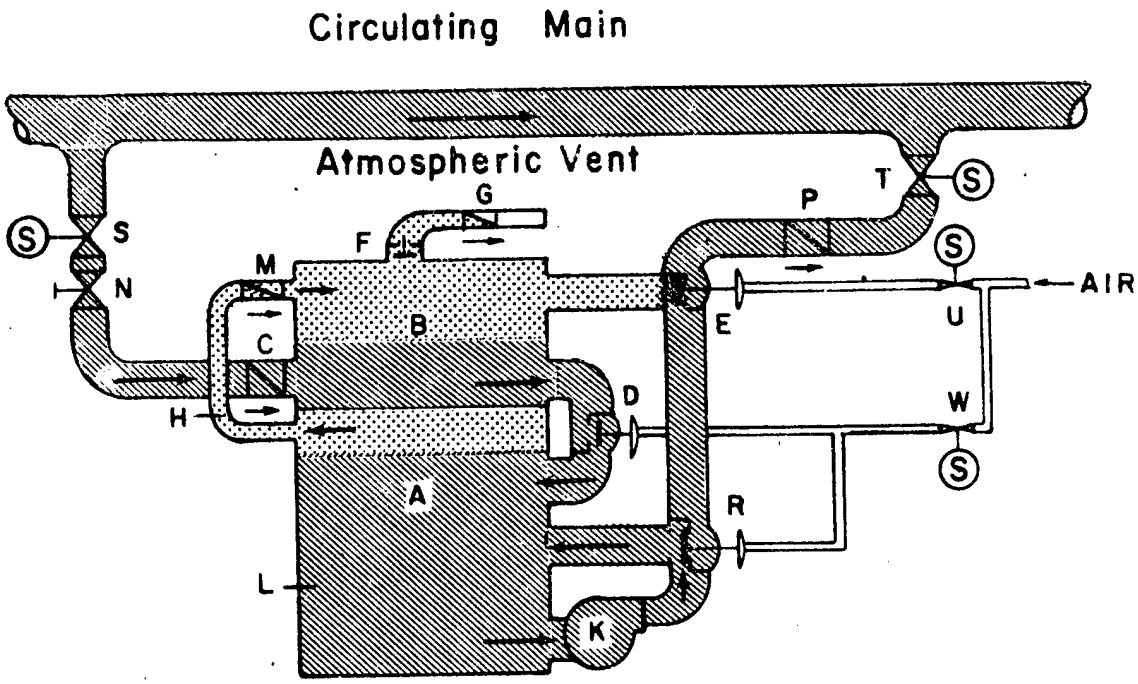

When solenoid valve (W) is de-energized, diaphragm valve (R) diverts the pump discharge back into section (A) and diaphragm valve (D) opens, allowing the water in section (B) to flow by gravity to lower section (A) displacing the gases previously collected in section (A) to the upper section (B) through gas vent check valve (M). At this point, both sections (A) and (B) are at vacuum. When the water level reaches upper electrode (H), the cycle is ready to start again.

FIGURE 4. PHASE IV - OPERATING CYCLE

APPLICATION

Because of the excessive costs involved, no attempt was made to develop a deaerator large enough to process the full flow of the demineralized water system on a continuous basis. Instead a unit was developed which, operating continually, processes the full volume once every 1-1/2 hours.

Figure 5 schematically shows the installation of the J-W deaerator in the 50 Megawatt Facility high pressure arc heater cooling system. Figure 6 is a photograph of the deaerator installation. Two (2) complete deaerators are installed. One acts as a standby, to be used in event of emergency or maintenance shutdown of the other.

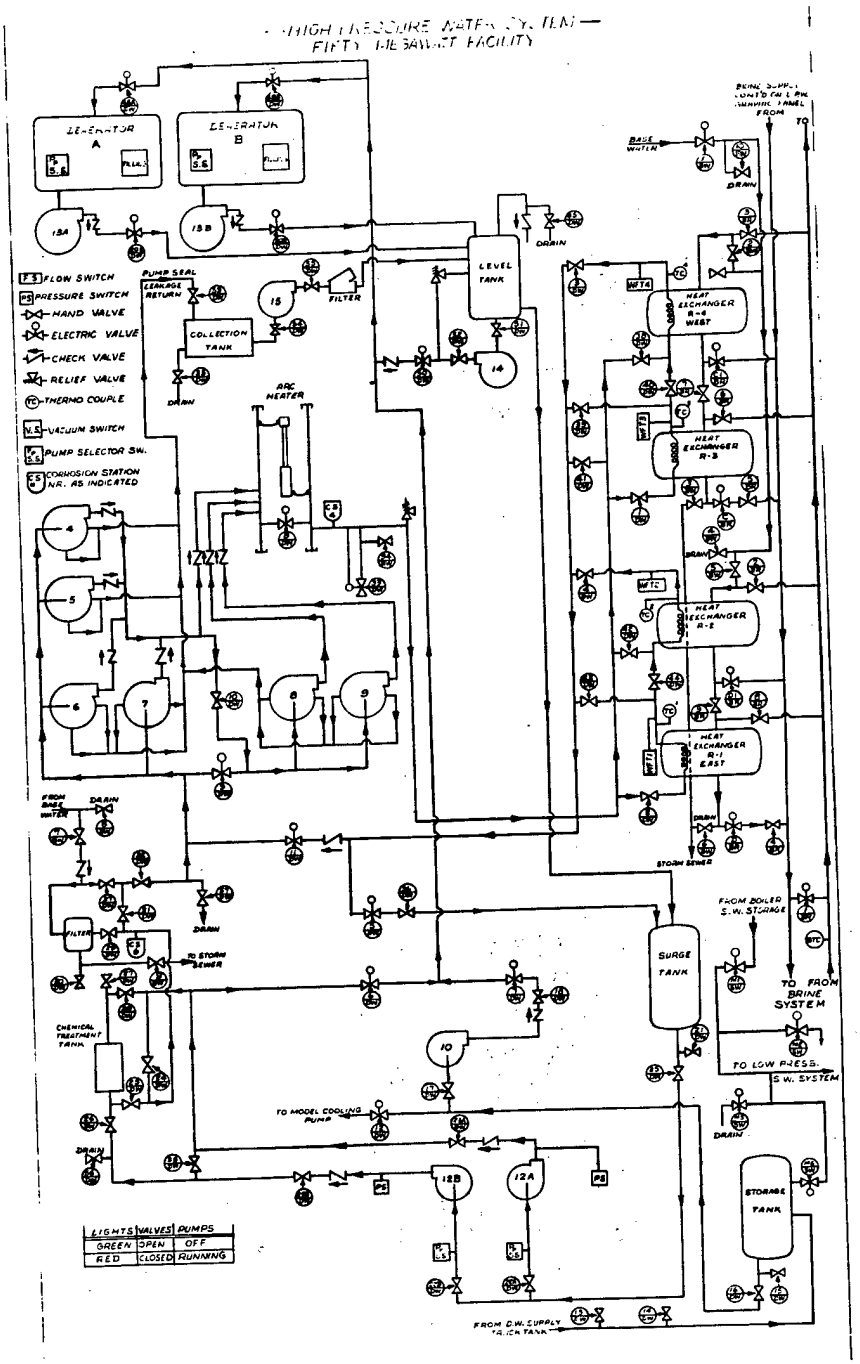

FIGURE 5 - High Pressure Water System

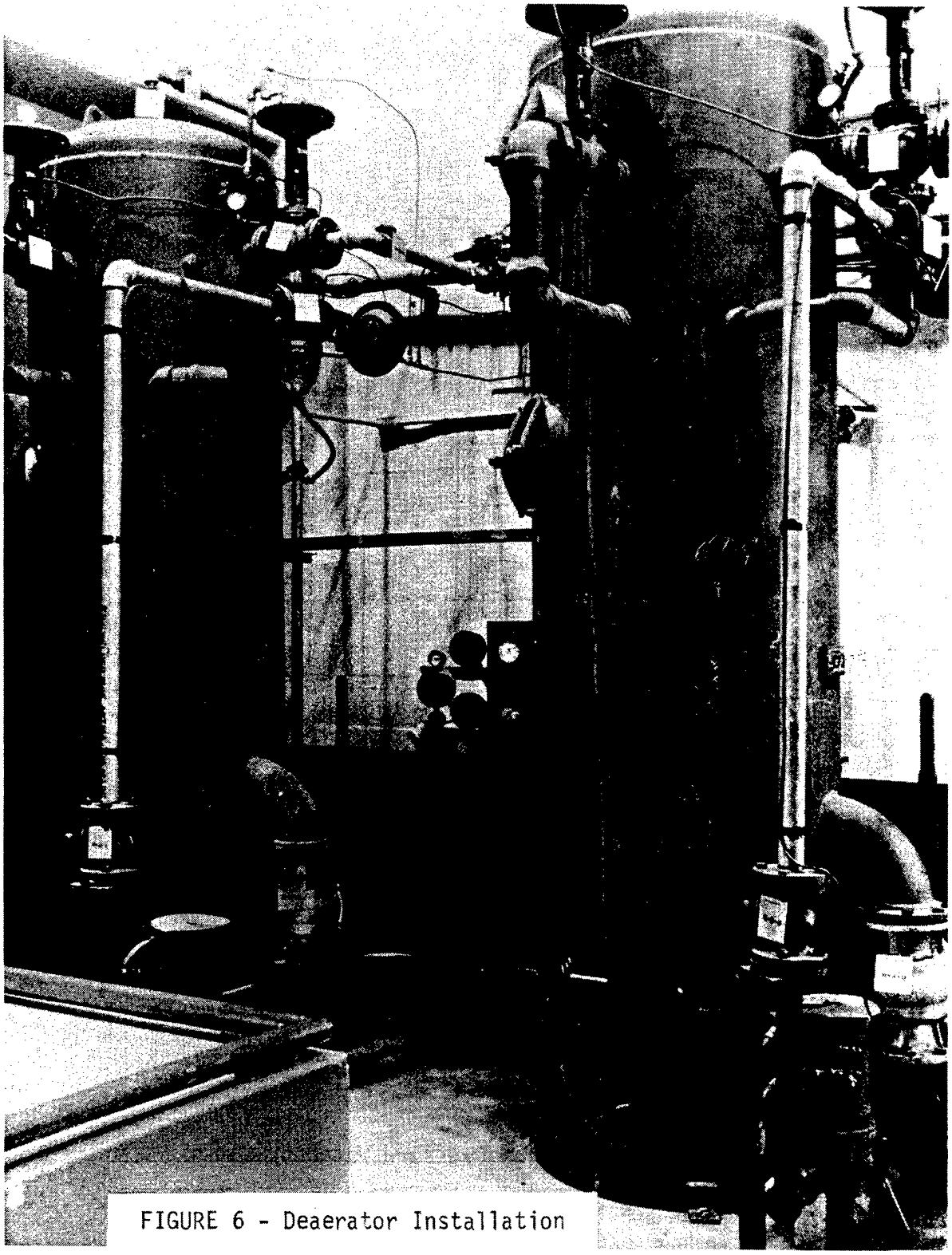

FIGURE 6 - Deaerator Installation

EFFECTIVENESS

Maintaining the cooling system in a deaerated condition is difficult because of the frequency with which the system is exposed to air. For example, anytime the water connections are changed or the heater has to be disassembled, part of the cooling system is drained and exposed. For this reason it has been difficult to determine precisely the effectiveness of the J-W deaerator.

A vacuum gage which reads the pressure in the lower tank indicates that a pressure of 5.0 in. Hg abs is produced during the deaeration cycle. The temperature of the water is approximately 25°C.

The solubility of air in water at 25°C and 1 atmosphere is 8.11 parts per million (ppm) (Reference 1). The water vapor pressure at 25°C = 0.935 in. Hg abs. The partial pressure of air at 1 atmosphere then is 29.921-0.935=28.986 in. Hg abs, and the partial pressure of air at 5 in. Hg abs is 5.000-0.935=4.065 in. Hg abs.

Since the solubility of air is proportional to its partial pressure, the air content at 25°C when the total pressure measures 5.0 in Hg abs equals 8.11 x 4.065/28.986=1.137 ppm and the maximum air removal from the processes volume equals 8.110-1.137=6.973 ppm. Since the deaerator is part of a recirculating system, the concentration of dissolved air in the system is continually decreasing to where the deaerator need only remove the air entering the system with the make-up water.

In order to maintain a check on the system, the effectiveness of the deaerator is periodically monitored with a Magna Model 1170 portable corrator with a Model 8002 mild steel probe. This instrument measures the pitting index and the corrosion rate (mils/year) in the demineralized water system. The corrosion rate is consistently less than 0.2 mils/year and the pitting index is approximately 0.4, both of which are considered acceptable.

DEAERATOR COMPONENTS

The deaerator tank is shown on Air Force Drawing Number X67D387 (Figure 7). The tank inside diameter is 36 inches and the shell and head thickness is 0.25 inch. Three semi-eliptical heads are used to form the two compartments. The upper section holds 134.4 gallons, which equals the volume of water between the high and low level probes in the lower compartment. The total volume of the lower compartment is 325.5 gallons. The shell extends 36 inches below the bottom head to ensure a minimum 2.0 foot net positive suction head for the pump.

The pump is a vertical centrifugal pump driven by a five horsepower electric motor. The flow rate is 100 gallons per minute at a total discharge head of 60 feet of water with a net positive suction head of 2.0 feet of water.

Power for the pump motor is 480 volts, 60 hertz, 3 phase. Power for the solenoid valves and all control power is 120 volts, 60 hertz. An electrical schematic for the deaerator is shown on Figure 8.

A complete parts list is part of the assembly drawing, Air Force Drawing Number X67D384, shown in Figure 9.

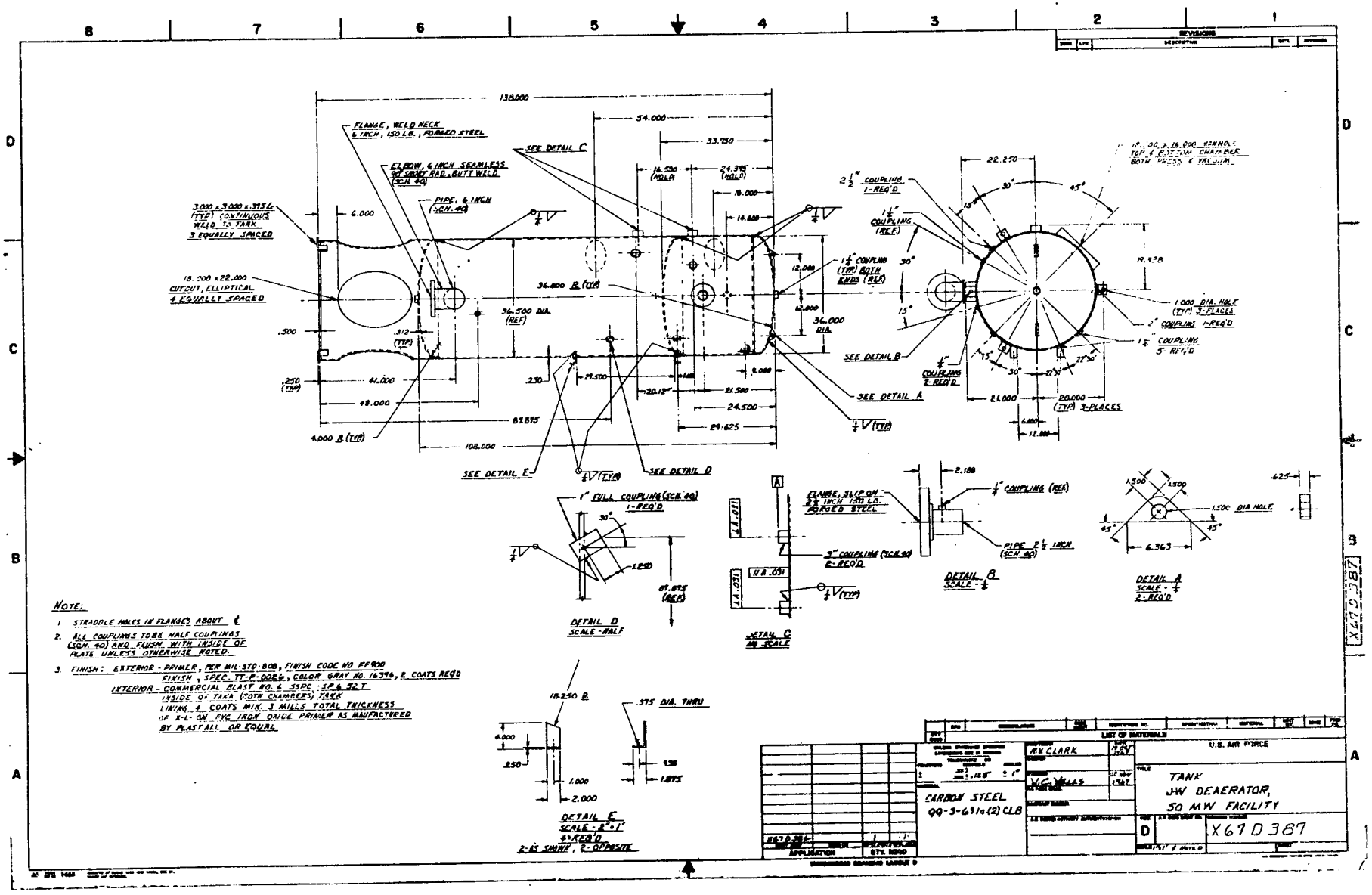

FIGURE 7 - J-W Deaerator Tank

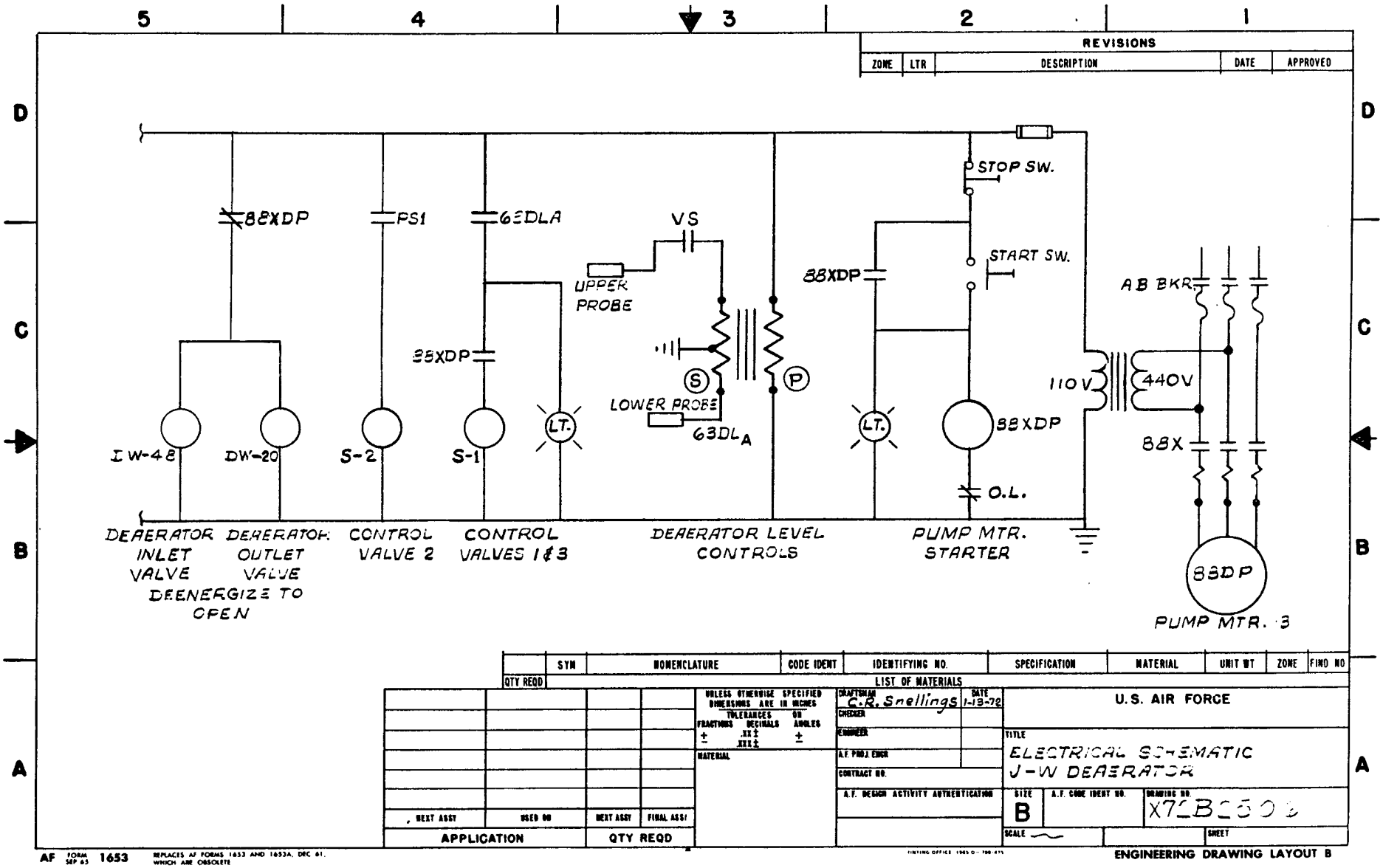

FIGURE 8 - Electrical Schematic

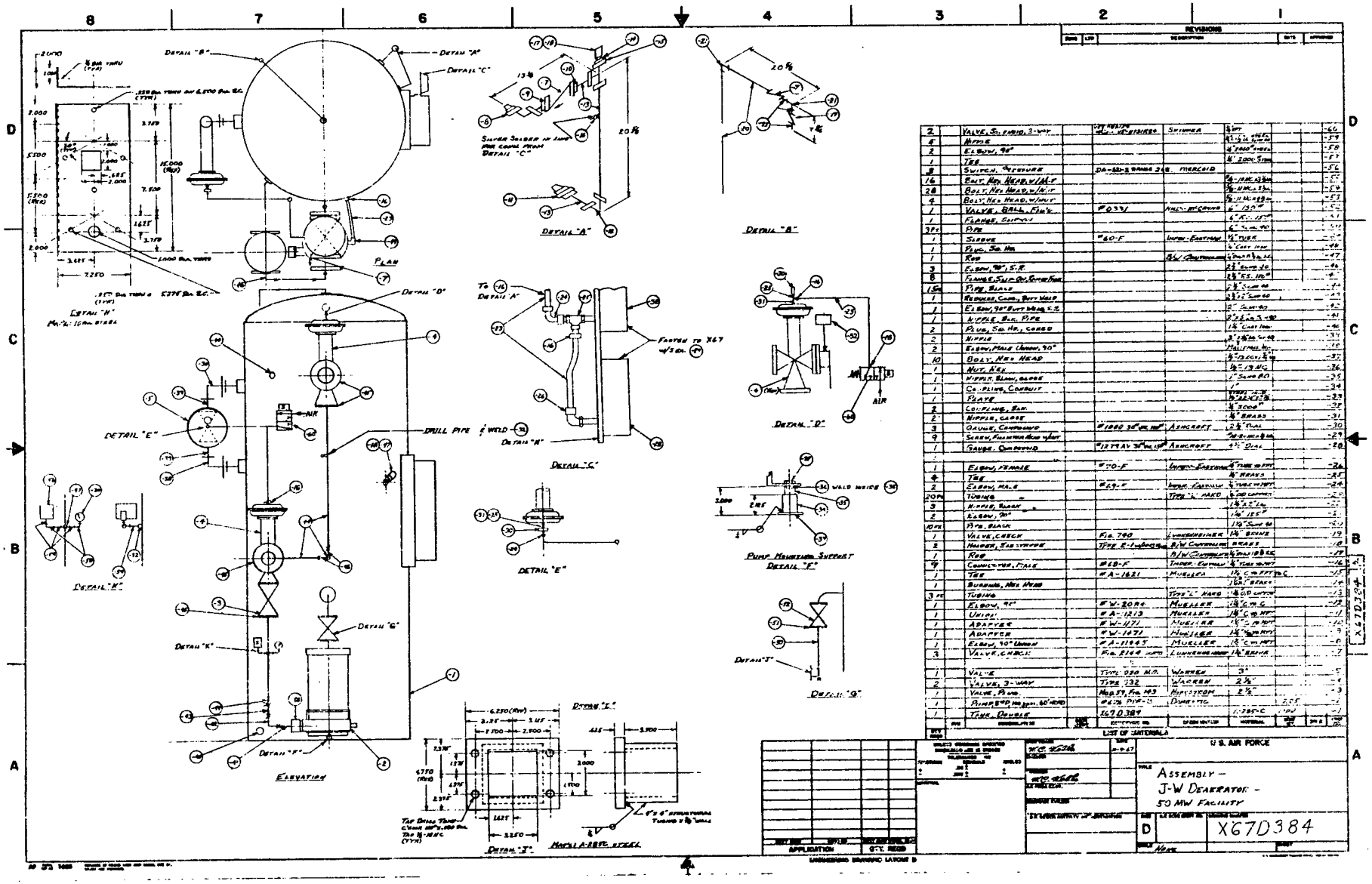

FIGURE 9 - J-W Deaerator Assembly

REFERENCES

1. Hamer, P., Jackson, J., and Thurston, E. F., "Industrial Water Treatment Practice", London, England, Butterworths 1961.

2. C. I. Baker Division of the Amcodyne Corporation, "Baker Deaerating Unit", Bulletin BHCW-65.

3. TM 71-17FXE, The 50 Megawatt Facility, Information for Users. WPAFB, Ohio: Air Force Flight Dynamics Laboratory, October 1971.