REPORT DOCUMENTATION PAGE

Form Approved
OMB No. 0704-0188

Public reporting burden for this collection of information is estimated to average 1 hour per response, including the time for reviewing instructions, searching existing data sources, gathering and maintaining the data needed, and completing and reviewing this collection of information. Send comments regarding this burden estimate or any other aspect of this collection of information, including suggestions for reducing this burden, to Department of Defense, Washington Headquarters Services, Directorate for Information Operations and Reports (0704-0188), 1215 Jefferson Davis Highway, Suite 1204, Arlington, VA 22202-4302. Respondents should be aware that notwithstanding any other provision of law, no person shall be subject to any penalty for failing to comply with a collection of information if it does not display a currently valid OMB control number. **PLEASE DO NOT RETURN YOUR FORM TO THE ABOVE ADDRESS.**

1. REPORT DATE	2. REPORT TYPE Professional Paper	3. DATES COVERED
4. TITLE AND SUBTITLE NexGenBus Test Plan		5a. CONTRACT NUMBER 5b. GRANT NUMBER 5c. PROGRAM ELEMENT NUMBER
6. AUTHOR(S) Sid Jones		5d. PROJECT NUMBER 5e. TASK NUMBER 5f. WORK UNIT NUMBER
7. PERFORMING ORGANIZATION NAME(S) AND ADDRESS(ES) Naval Air Warfare Center Aircraft Division 22347 Cedar Point Road, Unit #6 Patuxent River, Maryland 20670-1161		8. PERFORMING ORGANIZATION REPORT NUMBER
9. SPONSORING/MONITORING AGENCY NAME(S) AND ADDRESS(ES) Naval Air Systems Command 47123 Buse Road Unit IPT Patuxent River, Maryland 20670-1547		10. SPONSOR/MONITOR'S ACRONYM(S) 11. SPONSOR/MONITOR'S REPORT NUMBER(S)

12. DISTRIBUTION/AVAILABILITY STATEMENT

Approved for public release; distribution is unlimited.

13. SUPPLEMENTARY NOTES

14. ABSTRACT

This test plan describes the test objectives, test elements, and methods for achieving the objectives. The test objectives and elements are identified to level that is considered reasonably for the evaluation of Fibre Channel as a communication bus for flight test instrumentation applications.

15. SUBJECT TERMS

16. SECURITY CLASSIFICATION OF:			17. LIMITATION OF ABSTRACT	18. NUMBER OF PAGES	19a. NAME OF RESPONSIBLE PERSON Sid Jones
a. REPORT	b. ABSTRACT	c. THIS PAGE			19b. TELEPHONE NUMBER (include area code)
Unclassified	Unclassified	Unclassified	Unclassified	24	(301) 342-1601

Standard Form 298 (Rev. 8-98)
Prescribed by ANSI Std. Z39-18

Document #
30 September, 1999

Next Generation Instrumentation Bus

TEST PLAN

for

Fibre Channel

Next Generation Instrumentation Bus Project
Naval Air Warfare Center
Aircraft Division
Patuxent River, MD 20670-1456

DTIC QUALITY INSPECTED 1

20000407 139

CONTENTS

PARAGRAPH PAGE

1 INTRODUCTION 1
1.1 Purpose 1
1.2 Application 1
1.3 Test approach 1
1.3.1 Constraints 1
1.4 Fibre Channel Model 2
1.4.1 Physical Media (Level FC-0) 2
1.4.2 Transmission Protocol (Level FC-1) 2
1.4.3 Signaling Protocol (Level FC-2) 2
1.4.4 Common Services (Level FC-3) 2
1.4.5 Upper-Level Protocol Interface (Level FC-4) 2
1.5 Test sample 3
1.5.1 Fibre Xpress 3
1.5.1.1 Tachyon chip 3
1.5.1.2 Fibre Xpress Light-weight Protocol 3
2 TEST MANAGEMENT 3
2.1 Testing locations 3
2.1.1 Test bed 3
2.2 Test instruments 3
2.2.1 Communications analyzer 3
2.2.2 Fibre Channel analyzer 4
2.2.3 Fibre Channel generator 4
3 TEST OBJECTIVES 4
3.1 Analysis tests 4
3.2 Demonstration tests 4
3.2.1 Eye-diagram waveform test 4
3.2.2 Cable interoperability test 5
3.2.3 Transmission rate test 5
3.2.4 Noise rejection test 5
3.3 Simulation tests 5
4 TEST ELEMENTS 5
4.1 Physical plant 5
4.1.1 Data cables 5
4.1.1.1 Bend radius 5
4.1.1.2 Outer diameter 6
4.1.1.3 Environment 6
4.1.1.3.1 Vibration 6
4.1.1.3.2 Temperature 6
4.1.1.4 Balanced cable 6
4.1.1.4.1 Attenuation 6
4.1.1.4.2 Impedance 6
4.1.1.4.3 Shielding 6
4.1.1.4.4 Skew 6
4.1.1.5 Unbalanced cable 7
4.1.1.5.1 Attenuation 7
4.1.1.5.2 Impedance 7

CONTENTS

PARAGRAPH PAGE

4.1.1.5.3 Shielding 7
4.1.2 Data connectors 7
4.1.2.1 Attenuation 7
4.1.2.2 Crosstalk 7
4.1.2.3 Impedance 7
4.1.2.4 Shielding 7
4.2 Topology 7
4.2.1 Class of service 7
4.2.1.1 Bandwidth 8
4.2.1.2 Error recovery 8
4.2.1.3 Flow control 8
4.2.2 Initialization 8
4.2.3 Latency 8
4.2.4 Synchronicity 8
4.2.5 System recovery 8
4.2.6 Transmission rate 8
4.3 Noise 8

5 EVALUATION 8

5.1 Analysis 8
5.2 Demonstration 9
5.3 Simulation 9

6 NOTES 10

6.1 Use of figures 10
6.2 Remarks 10

10 APPENDIX A 15

A BALANCING NETWORK 16

A.1 Introduction 16
A.2 Instrumentation interface adapters 16
A.2.1 Balanced copper 16
A.2.2 Unbalanced copper 17
A.2.3 Tap adapters for balanced copper 17
A.2.3.1 Balanced-balanced 17
A.2.3.2 Balanced-Unbalanced 17
A.2.4 Tap adapters for unbalanced copper 18
A.2.5 Extracting a balanced trigger signal 18
A.3 Special considerations 19
A.3.1 Baluns 19
A.3.2 Other adapter components 20

TABLE 1: CRITICAL TEST ELEMENTS MAPPED TO FIBRE CHANNEL 1
TABLE 2: TEST MATRIX 9

FIGURE 1 - EYE-DIAGRAM WAVEFORM TEST CONFIGURATION 11
FIGURE 2 - CABLE INTEROPERABILITY TEST CONFIGURATION 12
FIGURE 3 - TRANSMISSION RATE TEST CONFIGURATION 13

CONTENTS

PARAGRAPH PAGE

FIGURE 4 - NOISE TEST CONFIGURATION 14

1 Introduction

1.1 Purpose

This test plan describes the test objectives, test elements, and methods for achieving the objectives. The test objectives and elements are identified to level that is considered reasonably for the evaluation of Fibre Channel as a communication bus for flight test instrumentation applications.

1.2 Application

The applicability of this test plan is limited to the evaluation of the test elements for the basis of determining the feasibility of Fibre Channel for use in flight test instrumentation applications. The primary methods for evaluating the test elements are analysis, demonstration, and simulation. This plan does not contain procedures for implementing the methods of evaluation but merely the process in which the test elements will be evaluated. This plan also only addresses the copper medium; no optical test elements are defined.

1.3 Test approach

The test approach is structure such that the critical elements are mapped to the Fibre Channel model to provide an understanding of how variations to these elements could effect the Fibre Channel interface. Therefore, it is intended as practically as possible to perform the defined tests starting with the physical layer (FC-0) up through the upper layer protocols (FC-4). The tests will be structured such that they provide a reasonable level of confidence. The theoretical allocation of the test elements is shown in Table 1.

Table 1: Critical Elements Mapped to Fibre Channel

	Theoretical				
Critical Elements	**FC-0**	**FC-1**	**FC-2**	**FC-3**	**FC-4**
Data Rate	X				
Bit Error Ratio	X				
Synchronicity		X			
Medium					
Cable Diameter	X				
Cable Bend Radius	X				
Cable Interoperability	X				
Topologies			X		
Latency			X		
Quality of Service					
Class of Service			X		
Guaranteed Delivery			X		
Protocol					
Signaling			X		
Upper-Level					X

1.3.1 Constraints

Theoretical reference models are useful tools to communicate ideas and thoughts. However, the implementation of the elements contained within the models does not necessary allow the elements to be solely tested on there own merits. Therefore the functions of these elements in most cases can not be tested independently and must rely on the inputs and outputs of other elements. The physical aspects of Fibre Channel allows for the segregation into three

areas; (1) physical plant, (2) logical port functions, and (3) node functions. However, the lightweight protocol being implemented in the test bed is considered to have negligible effect on the test elements being evaluated and thus will be considered as part of the port.

1.4 Fibre Channel Model

Fibre Channel is structured with five independent layers. Each layer of Fibre Channel defines the specific characteristics used to transfer from node to another node. The layers can be easily broken down into two categories port functions and node functions. The port functions are identified in FC-0 through FC-2 and the node functions are identified in layers FC-3 and FC-4. The following paragraphs will highlight the key characteristics of each layer.

1.4.1 Physical Media (Level FC-0)

The lowest level, FC-0, specifies the physical link of the channel. Its physical characteristics cover the interface and media, medium (including connectors), and transceivers. Fibre Channel operates over various physical media and data rates. A 10-bit interface with FC-1 provides a media independent interface between the physical media layer and transmission protocol layer. Some specific hardware items may also contain a copper to fiber optic interface.

1.4.2 Transmission Protocol (Level FC-1)

The FC-1 defines encoding/decoding and transmission protocol used to integrate the data with the clock information for serial transmission. The 8B/10B code scheme is used for clock recovery, byte synchronization as well as encode/decode of data bytes. This code scheme basically transmits the eight-bit byte as a 10-bit word.

1.4.3 Signaling Protocol (Level FC-2)

The FC-2 layer defines the rules for the signaling protocol and describes the transfer of the data frame, sequence, and exchanges. The frame contains start and end delimiters, a header, a 32-bit cyclic redundancy check (CRC), and a maximum payload of 2148 bytes. The sequence is composed of one or more concurrent frames for a single operation. An exchange is composed of one or more non-concurrent sequences for a single operation. However, it is noted that these exchanges may be multiplexed for concurrent exchanges. The data transport mechanism is independent of upper layer protocols and has the ability to support point-to-point, arbitrated loop, and switched environments. The FC-2 also supports the various classes of service, which provide and manage circuit switching, frame switching, datagram services, and fractional bandwidth virtual circuits through the fabric.

1.4.4 Common Services (Level FC-3)

FC-3 covers the functions that span multiple ports on a single node or across a fabric. There are currently two functions defined: Hunt Groups and Multicast.

Hunt Groups -A hunt group is a set of associated ports attached to a single node. This set is assigned an alias identifier that allows any frames containing this alias to be routed to any available port within the set. This improves efficiency by decreasing the chance of reaching a busy port.

Multicast -Multicast delivers a single transmission to multiple destination ports. This includes sending to all ports on a fabric (broadcast) or to only a subset of the ports on a fabric (multicast).

1.4.5 Upper-Level Protocol Interface (Level FC-4)

FC-4 defines interoperable implementations for various upper level protocols. The upper level protocols are adept at transporting network and channel based information and allows both protocol information types to be concurrently transported over the same physical interface. Each of these information categories has different attributes and requires separate processing. However, the processing of each category is common for all protocol types. FC-4 maps the protocols to the physical and signaling standard through mapping rules which specifically describe how the upper level protocol processes the same information type.

1.5 Test sample

1.5.1 Fibre Xpress

The Fibre Xpress network from Systran is a personnel computer based network based on the Fibre Channel standards. These network cards will serve as the test sample for port testing. The heart of the Fibre Xpress network cards is the tachyon chip from Hewlett Packard. The tachyon chip is basically a single chip Fibre Channel port. The Fibre Xpress network allows for any the following topologies point-to-point, arbitrated loop, and switched fabric. However, the network cards only support the 1062Mbps data transfer rate. These network cards will also serve to validate the simulation model that will be to test the protocols.

1.5.1.1 Tachyon chip

The user's manual for the Tachyon controller chip identifies the following FC-AL specification deviations.

1) The interframe gap is reduced to a minimum of two words if its buffer is approaching an error condition that would force re-initialization of the loop.
2) Exceeds the node delay for 266 and 531 Mbaud data rates.
3) Bypasses part of the loop initialization sequences.

1.5.1.2 Fibre Xpress Light-weight Protocol

The FC-4 upper layer protocol is a Systran proprietary light-weight protocol. It is not clear at this time if the node functions are representative of the Fibre Channel standards. However, this light weight protocol only supports arbitrated loop topology as well only supports class three service.

2 Test Management

2.1 Testing locations

The physical testing will be performed at the Naval Air Warfare Center at Patuxent River Maryland within the laboratories of the Test Article Preparation Department.

2.1.1 Test bed

The two Fibre Xpress network cards are hosted in two Pentium personal computers. Both computers our operating under Windows NT with one computer operating at 200Mhz and the other operating at 400Mhz.

2.2 Test instruments

2.2.1 Communications analyzer

The HP 83480A digital communications analyzer from Hewlett Packard provides the ability to perform waveform analysis for the Fibre Channel interface. The HP 83480A is a modular platform that accepts up to two plug-in modules. The plug-in module HP 54754A provides two 18-GHz channels that have built-in time-domain reflectometry step generators. The two channels may work in tandem to provide differential and common mode TDR stimulus/response or may be used independently. The channels work as a normal oscilloscope vertical system when the TDR step generators are not operating. The digital communications analyzer provides fast, repeatable communications waveform performance analysis with automated pulse and eye-diagram statistical measurements. Optical or electrical conformance tests to both user-defined and industry standard eye-diagram masks or pulse templates are easily executed.

2.2.2 Fibre Channel analyzer

The FCAccess 1000 is an analysis tool from Ancot for Fibre Channel networks. The analyzer is based in a personal computer using a client server architecture that is Java-based. The operating system the client is utilizing is Windows NT. The analyzer allows multiple clients to control the analyzer and/or view the analyzer simultaneously. FCAccess 1000 provides for Fibre Channel traffic capture capability, capturing all FC traffic in native 10B format at rates exceeding 270 MB/s with a trace memory of 1GB. FCAccess provides hardware-based data search engine, called WarpSearch(tm). The search engine provides users with hardware triggering, capture and data filtering capability, and hardware-assisted searching. The analyzer supports both optical and copper media at 1.06 Gbps.

2.2.3 Fibre Channel generator

The Ancot FCT-5500 Fibre Channel generator is a protocol debugging tool and programmable traffic and error generator for Fibre Channel systems. The FCT-5500 includes a library of Fibre Channel frames and commands that include tests which can be modified by the user to create custom test suites. The generator has the ability to generate illegal codes (10B) for error testing and will support all standard topologies- point-to-point, arbitrated loop and fabric. The generator supports either optical or copper media at 1.06 Gbps.

3 Test Objectives

The primary objective of this test plan is to determine the feasibility of using Fibre Channel as an interconnection standard for data acquisition applications. This objective will be accomplished by the following tests: analysis, demonstration, simulation or a combination thereof. However, these tests are oriented toward operational testing rather than developmental testing.

The testing activity will be accomplished in two stages. The first stage will begin with analysis of the physical plant test elements and benchmark testing for the simulation model. The second stage will begin the demonstration tests and the full-up simulation tests. It is likely that each of the tests will overlap into each stage as the testing activity progresses. The test elements for each test are identified in section 4 of this test plan.

3.1 Analysis tests

The purpose of the analysis is to determine by analytical means which test elements that can not be adequately evaluated by demonstration or simulation and requires more in-depth understanding of how the specific test element effect the overall test objective.

The analysis will begin by investigating various cables and connectors against the test elements identified in the physical plant category. These results will then be used as part of the Eye-diagram waveform test. Additional analysis will be performed based on the information required for the demonstration and simulation tests or as a result of these tests.

3.2 Demonstration tests

The purpose of the demonstration tests is to determine by physical means which test elements meet the requirements for a flight test data acquisition system. The results of these demonstration tests could have an effect on the results of the analysis and simulation tests. The specific demonstration tests are defined below. It is anticipated that the test will be performed in the numerical order shown.

3.2.1 Eye-diagram waveform test

The purpose of this test is to evaluate the signal characteristics of the data channel at the end of the cable assemblies. **Figure 6-1** shows the test setup for this test. In general, this test characterizes the amplitude and time variables associated with the signal characteristics. This test is considered more of qualitative than quantitative.

3.2.2 Cable interoperability test

The purpose of test is to verify that the cable assemblies selected during Eye-diagram waveform test meet the received signal specifications in Clause 7 of the FC-PH standards. **Figure 6-2** shows the test setup for this test. This test will be performed using cable lengths of 15ft, 50ft, and 100ft.

3.2.3 Transmission rate test

The purpose of this test is to evaluate the test sample responses to frames transmitted for a sustained period with a minimum time between frames. The frames will be transmitted at the maximum frame rate that is allowed for the test sample. Each exchange will be sent to the test sample a minimum of 1000 times. **Figure 6-4** shows the test setup for this test.

3.2.4 Noise rejection test

This test characterizes the test sample's ability to operate in the presence of noise. **Figure 6-4** depicts the configuration for conducting the noise rejection test. The noise source will be composed of additive white Gaussian noise distributed over a bandwidth of 10MHz to 1.5Ghz. The noise power will be adjusted to determine the point that causes the test sample to detect an invalid frame. The noise test shall run continuously with transmission gap times greater than 10μs until the total number of bits received by the test sample exceeds 10^{13} bits. The data payload used in this test will contain random data bit patterns.

3.3 Simulation tests

The purpose of the simulation tests is to determine by mathematical means which test elements meet the requirements for a flight test data acquisition system. The data obtained from these simulations will be used to first verify that Fibre Channel meets the requirements for a flight test data acquisition system. The results will provide an understanding in determining which topologies and protocols are best suited for the next generation instrumentation bus. For additional information on the simulation tests, refer to the NexGenBus simulation plan.

4 Test Elements

The test elements are grouped into three categories physical plant, topology, and noise. The test elements attempt to identify specific quantitative measures and do not address specific tests. Each test element category is discussed in the succeeding paragraphs.

4.1 Physical plant

The physical plant category contains the test elements for the data cables and connectors. The physical plant identifies the test elements that are considered the most important test elements for this category. However, it is anticipated that for the intended application that the physical plant will mostly likely deviate from the Fibre Channel standards. The anticipated deviation as well as the tangibility of the physical plant allows for a more in-depth assessment of this category. The physical plant identified for Fibre Channel is more in-line with commercial applications. Therefore for it must be determined which connector and cable types are be best suited for flight test environments.

4.1.1 Data cables

The purpose of these test elements is to identify specific elements in the Fibre Channel standards that are considered critical to meet the needs of application.

4.1.1.1 Bend radius

The purpose of this test element is to quantify the bend radius parameter in which the cables will be compared against -- 0.50 inches.

4.1.1.2 Outer diameter

The purpose of this test element is to quantify the outer diameter parameter in which the cables will be compared against. The baseline aggregate cable diameter is 0.125 inches.

4.1.1.3 Environment

The purpose of these test elements is to identify the critical elements of the intended environment. The two essential environmental parameters are vibration and temperature.

4.1.1.3.1 Vibration

The vibration profiles identified below will be used as the basis for the evaluation.

Random:	25Hz at $0.1G^2/Hz$ 100Hz at $5.0G^2/Hz$ 300Hz at $5.0G^2/Hz$ 2,000Hz at $0.15G^2/Hz$ 2,000Hz at $0.1G^2/Hz$
Sinusoidal:	10-50Hz at 254mm/sec 50-140Hz at 1.5mm double amplitude 140Hz-2,000Hz at 60G's

4.1.1.3.2 Temperature

This test element identifies the temperature envelope of –55°C to +100°C that will be used for the evaluation.

4.1.1.4 Balanced cable

The purpose of these test elements is to identify the specific elements of the Fibre Channel standards that are considered critical to meet the needs of the application.

4.1.1.4.1 Attenuation

The purpose of this test element is to identify the attenuation against a baseline of 0.27dB/m at 1Ghz.

4.1.1.4.2 Impedance

The purpose of this test element is to identify the impedance against a baseline of 150Ω ±10Ω.

4.1.1.4.3 Shielding

The purpose of this test element is to quantify the transfer impedance of the cable assembly through the shield against a baseline of 100-mΩ/m from dc through 1Ghz.

4.1.1.4.4 Skew

The purpose of this test element is to quantify the potential of induce differential skew of the cable assembly against the baseline of 175ps at 1Ghz.

4.1.1.5 Unbalanced cable

The purpose of these test elements is to identify the specific elements of the Fibre Channel standards that are considered critical to meet the needs of the application.

4.1.1.5.1 Attenuation

The purpose of this test element is to identify the attenuation against a baseline 0.15dB/m at 1Ghz.

4.1.1.5.2 Impedance

The purpose of this test element is to identify the impedance against a baseline of 75Ω ±5Ω at the maximum bit rate of 1GBaud.

4.1.1.5.3 Shielding

The purpose of this test element is to quantify the transfer impedance of the cable assembly through the shield against a baseline of 100-mΩ/m from dc through 1Ghz.

4.1.2 Data connectors

The purpose of these test elements is to identify the specific elements of the Fibre Channel standards that are considered critical to meet the needs of the application.

4.1.2.1 Attenuation

The purpose of this test element is to identify the attenuation against a baseline 0.25dB.

4.1.2.2 Crosstalk

The purpose of this test element is to quantify the potential crosstalk of the connector against a baseline of XdB.

4.1.2.3 Impedance

The purpose of this test element is to identify the impedance against a baseline of 150Ω ±10Ω for balanced cables and 75Ω ±5Ω for unbalanced cables.

4.1.2.4 Shielding

The purpose of this test element is to quantify the transfer impedance of the connector through the shell against a baseline of X-mΩ/m from dc through 1Ghz.

4.2 Topology

The topology category only identifies the test elements that are considered to be the most important test elements for this category and are limited to operational verification and the criteria established during the down select process. In general, these test elements will be more qualitative than quantitative.

4.2.1 Class of service

The purpose of these test elements is to identify specific elements of the classes of service provided for in the Fibre Channel standards that are considered critical to meet the needs of application.

4.2.1.1 Bandwidth

This test element is to characterize the probability of bandwidth availability for each topology based on the needs of the application.

4.2.1.2 Error recovery

This test element is to determine the error recovery time for each topology based on the needs of the application.

4.2.1.3 Flow control

This test element is to determine if the credit system used by Fibre Channel will satisfy the data integrity needs of the application.

4.2.2 Initialization

This test element is to determine the initialization time for each topology based on the needs of the application.

Note: Initialization meaning – how long until the system is ready to start normal application operations.

4.2.3 Latency

The purpose of this test element is to characterize the latency for each defined topology. The baseline in which this test element will be evaluated against in a Fibre Channel system having an end-to-end latency within X seconds.

4.2.4 Synchronicity

The purpose of test element is to determine the degree in which nodes can be synchronized for each topology. The baseline in which this test element will be compared against in a Fibre Channel system is the ability to synchronize nodes to within 10nS.

4.2.5 System recovery

This test element is to determine the recovery time for each topology based on the needs of the application.

Note: System recovery meaning – how long until the system recovers from an abnormality.

4.2.6 Transmission rate

The purpose of this test element is to characterize the data rate based on varying frame sizes for each topology. The baseline in which the test element will be evaluated against is 100MBps.

4.3 Noise

The purpose of this test element is to characterize Fibre Channel in presence of additive white Gaussian noise. The baseline in which this test element will be evaluated against in a Fibre Channel system is having a signal to noise ratio of 2:1.

5 EVALUATION

The test elements contained within section 4 will be evaluated as indicated in Table 2 by analysis, demonstration, simulation, or a combination thereof. A definition of each method of evaluation is provided below.

5.1 Analysis

Analysis is defined as an element of evaluation that utilizes established technical means such as algorithms; charts, graphs, circuit diagrams, or other scientific principles and procedures to provide evidence that stated objectives are achievable.

5.2 Demonstration

Demonstration is defined as an element of evaluation that denotes the actual operation, adjustment, or re-configuration of items to provide evidence that the designed functions were accomplished under specific scenarios. The items may be instrumented and quantitative limits performance monitored.

5.3 Simulation

Simulation is defined as an element of evaluation utilizing mathematical models to determine under simulated conditions the capabilities, limitations, characteristics, effectiveness, reliability or suitability of a device or system and involves the application of established scientific principles and procedures.

Table 2: Test Matrix

Paragraph Number	Test Element	Evaluation Method*				Demonstration Tests**			
		N/A	1	2	3	A	B	C	D
4	**TEST ELEMENTS**	X							
4.1	Physical plant	X							
4.1.1	Data cables	X							
4.1.1.1	Bend radius		X						
4.1.1.2	Outer diameter		X						
4.1.1.3	Environment	X							
4.1.1.3.1	Vibration		X						
4.1.1.3.2	Temperature		X						
4.1.1.4	Balanced cable	X						X	
4.1.1.4.1	Attenuation		X				X		
4.1.1.4.2	Impedance		X						
4.1.1.4.3	Shielding		X						
4.1.1.4.4	Skew		X				X		
4.1.1.5	Unbalanced cable	X						X	
4.1.1.5.1	Attenuation		X				X		
4.1.1.5.2	Impedance		X						
4.1.1.5.3	Shielding		X						
4.1.2	Data connectors	X						X	
4.1.2.1	Attenuation		X				X		
4.1.2.2	Crosstalk		X						
4.1.2.3	Impedance		X						
4.1.2.4	Shielding		X						
4.2	Topology	X							
4.2.1	Class of service	X							

Paragraph Number	Test Element	Evaluation Method*				Demonstration Tests**			
		N/A	1	2	3	A	B	C	D
4.2.1.1	Bandwidth				X				
4.2.1.2	Error recovery				X				
4.2.1.3	Flow control		X						
4.2.2	Initialization				X				
4.2.3	Latency				X				
4.2.4	Synchronicity		X		X				
4.2.5	System recovery		X						
4.2.6	Transmission rate			X	X	X			
4.3	Noise			X					X

* Method of Evaluation: **N/A** - Not Applicable, **1** – Analysis, **2** – Demonstration, and **3** – Simulation.

** Demonstration Tests: **A** –Data Rate, **B** –Eye Diagram, **C** –Interoperability, and **D** –Noise Rejection.

6 NOTES

6.1 Use of figures

Unless otherwise indicated, the test points identified in the figures define the measurement points to be at the connection point of the test sample.

6.2 Remarks

Beneficial comments (recommendations, additions, deletions, etc.) and any pertinent data that may be of use in improving this plan should be addressed to: Naval Air Warfare Center, Test Article Preparation, Next Generation Instrumentation Bus Project, Patuxent River, MD 20670-1456.

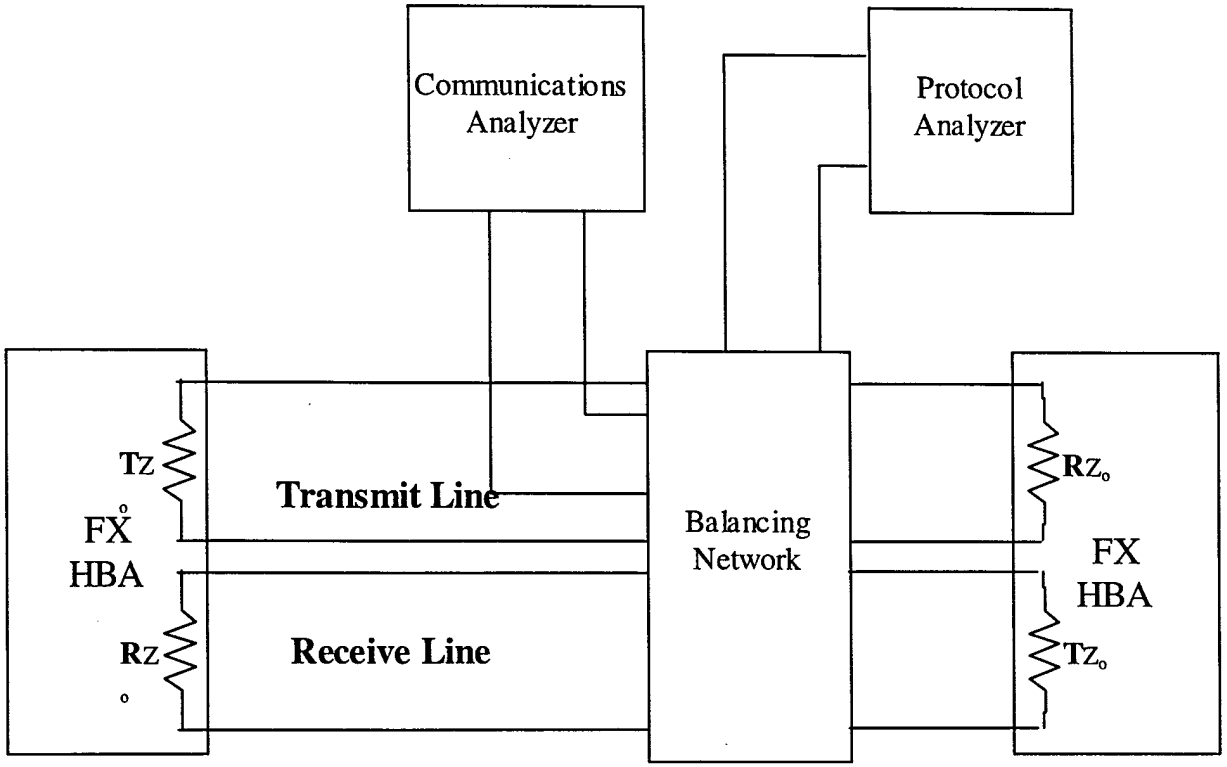

Z_o = Nominal Characteristic Impedance

Figure 6-1 - Eye-diagram waveform test Configuration

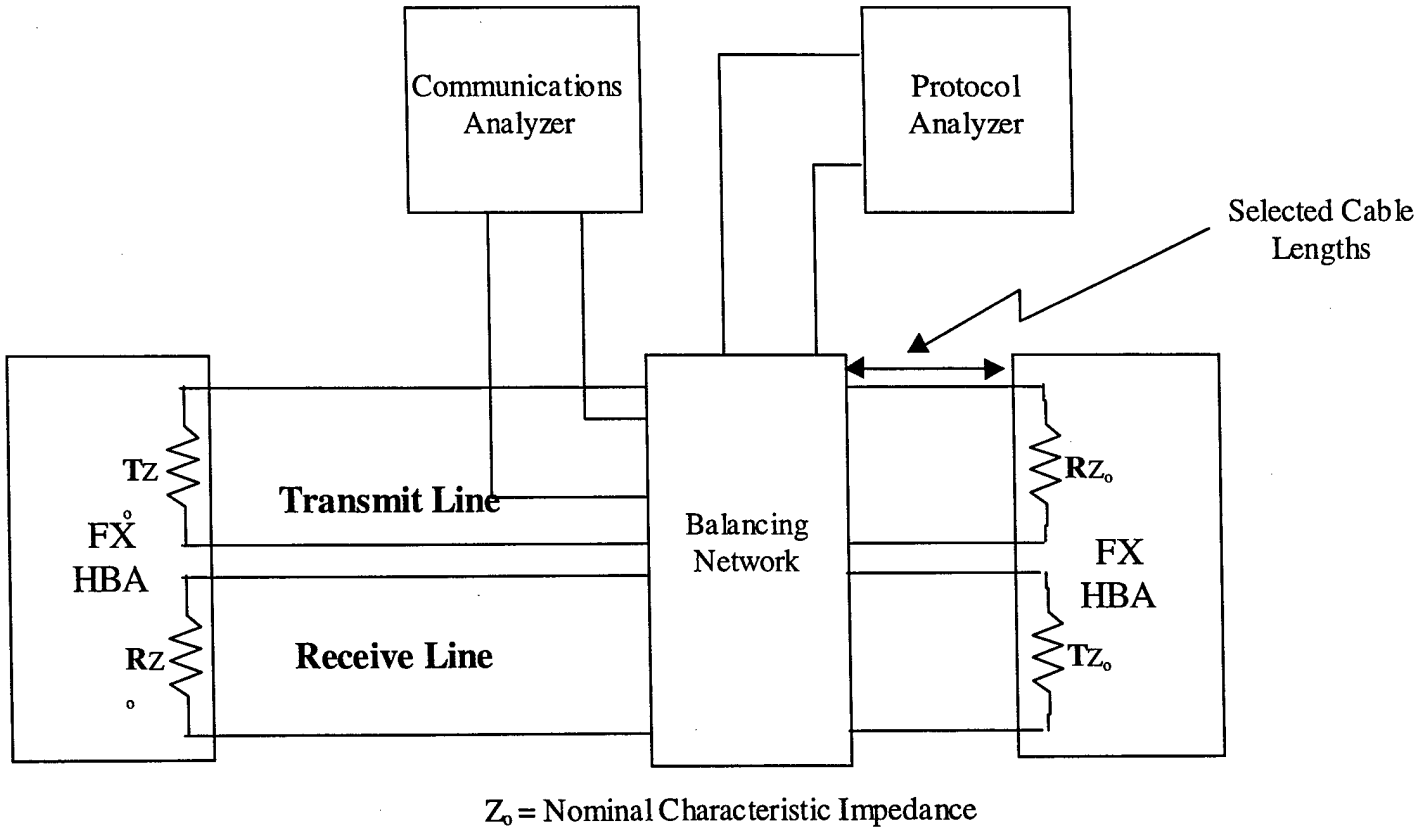

Figure 6-2 - Cable interoperability test Configuration

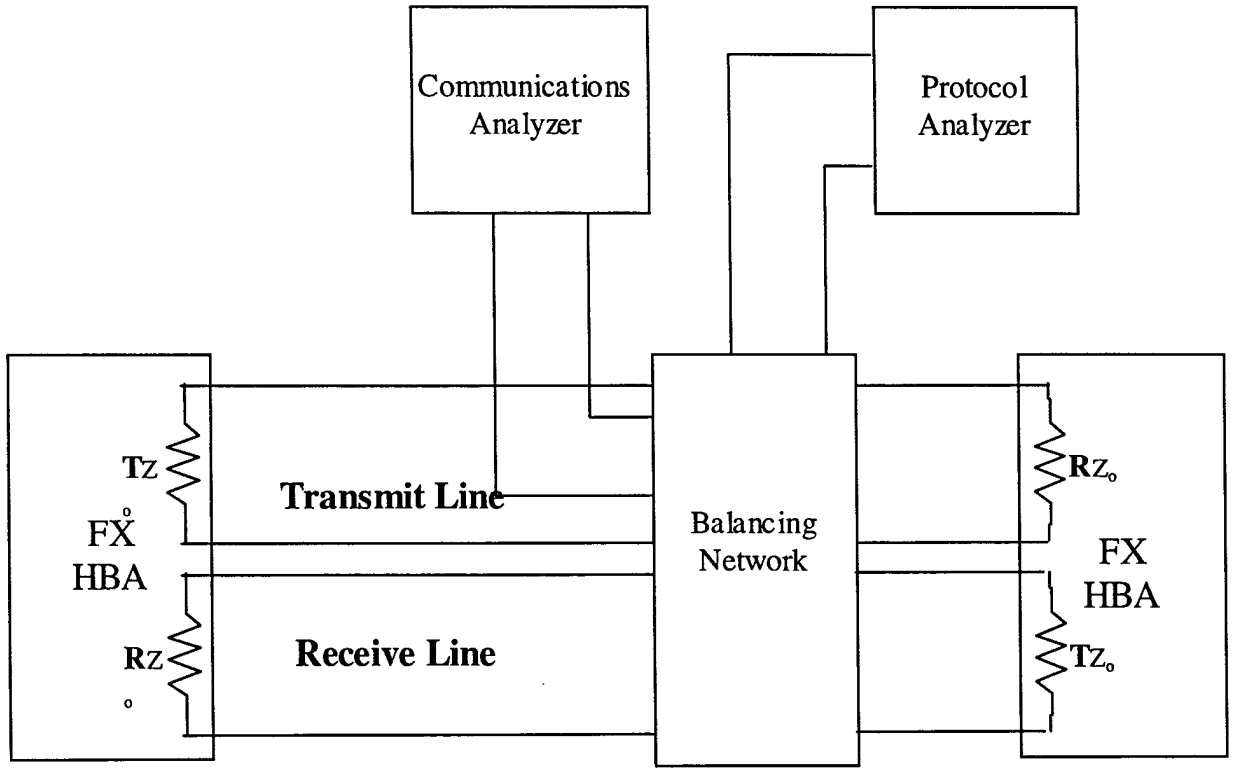

Z_o = Nominal Characteristic Impedance

Figure 6-3 - Transmission rate test Configuration

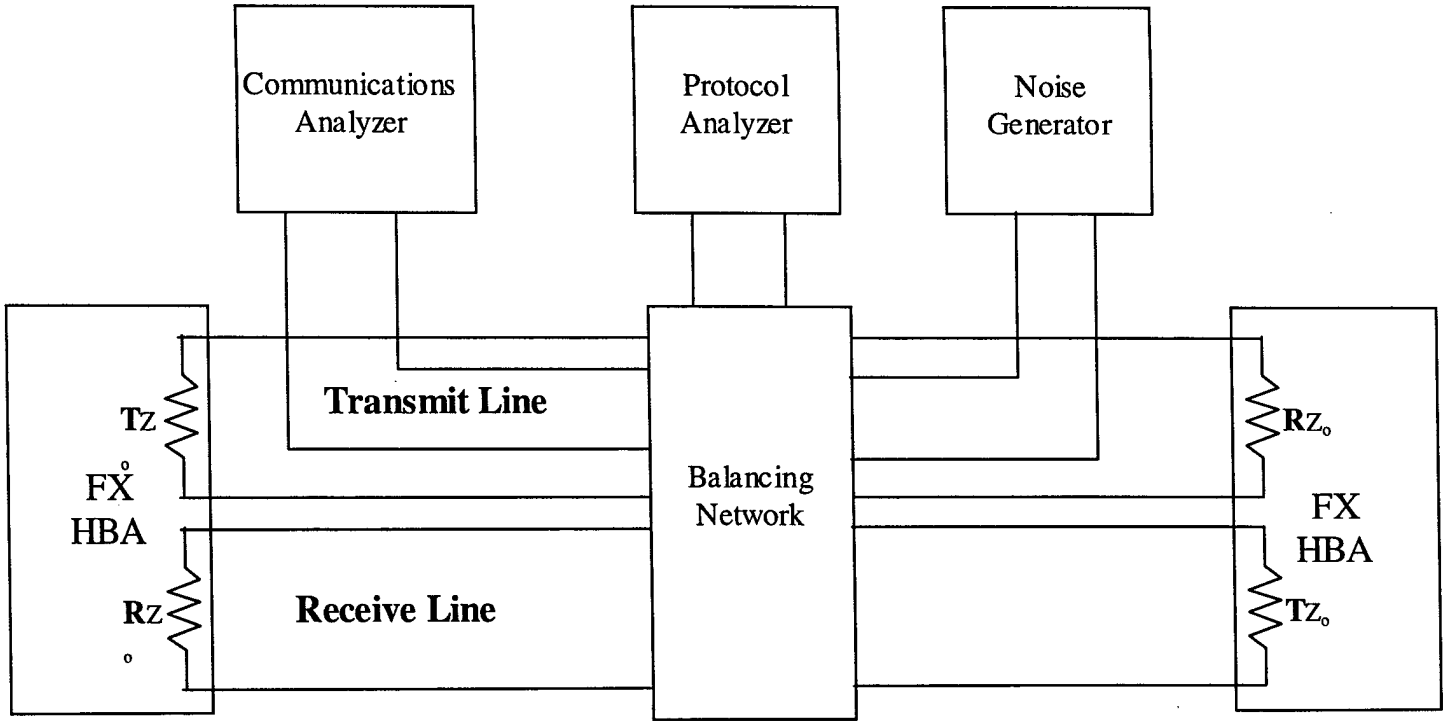

Z_o = Nominal Characteristic Impedance

Figure 6-4 - Noise Test Configuration

7 Hidden during printing

8 Hidden during printing

9 Hidden during printing

10 Appendix A

Balancing Network

for

Fibre Channel to Instrumentation Connection

A Balancing Network

A.1 Introduction

This appendix is intended to document the methodology used for implementing measurement techniques to Fibre Channel components during testing. This appendix contains mostly the methods used to transfer measurements from Fibre Channel components to standard test equipment. This appendix only contains general thoughts used and presents a solution used for this test plan.

A.2 Instrumentation interface adapters

Practical instrumentation must interface to the Fibre Channel components with minimal disruption to Fibre Channel components. The instrumentation must have the input and output environment it needs to operate properly as an instrument. Adapting interfaces must be used unless the instrumentation happens to have exactly the right Fibre Channel variant interface. Most existing instrumentation inputs and outputs do not use the Fibre Channel transmission environment.

The most fundamental requirement is to accurately determine the properties of the signals at the connectors of the device under test at the same time the device under test is responding to, carrying, or generating the signals. Tap adapter, where a FC port is the device under test, real FC frames may be required for traffic, and the instrumentation is a secondary sink -- either the source FC port or the sink FC port may be the device under test.

The measured signals at the instrumentation represent the signals that exist at the device under test connector when multiplied by the transfer functions of the interface adapter and the interconnecting media. There are several kinds of media specified in Fibre Channel and each needs its own kind of interface adapter. The remainder of the appendix discusses the adapters used for the balanced copper and the unbalanced copper. However, it should be noted that this appendix assumes that unbalanced FC components are not used with balanced instrumentation.

A.2.1 Balanced copper

Balanced copper has a nominal 150Ω balanced differential transmission environment. Almost all existing high speed electronic test equipment presents unbalanced inputs and outputs at a 50Ω impedance. Therefore these interface adapters are coupling or matching networks that have balanced 150Ω differential characteristics where attached to the FC components and 50Ω unbalanced single-ended characteristics where attached to test instruments.

The entire electrical path between the interface adapter components (resistors, balun contacts, etc.) and the FC media connection must have the characteristic impedance of the side of the interface adapter to which it is connecting. This includes all printed circuit traces, all connectors, and all wires. Components attached to any part of the electrical paths other than those specified could upset the signal flow. This includes oscilloscope probes, coupling capacitors, and ESD devices attached to the test electrical path. However, if coupling capacitors and ESD devices exist as part of the device under test then it should contribute to the devices under the performance of test. These restrictions are necessary to avoid disturbing the transmission line properties of the connections, thus obscuring what is to be measured. Special care shall be exercised when attaching connectors to media such that the termination side of the connector and its board or cable connection not induce any more deviations from the nominal characteristic impedance than absolutely necessary. This generally means carefully analyzing the use of through holes and trace routing in printed circuit boards.

Special care shall also be exercised to include the signal losses in traces on printed circuit boards and in the real components used when determining the actual transfer function of the interface adapter. This appendix shows the ideal transfer functions only and assumes that all ports are terminated in their characteristic impedance. The media paths shall be no longer than necessary and any media losses must be included as part of the transfer function of the path between the instrument and the device under test. Inserting the matching network into the test configuration

affects the signals somewhat and causes some signal loss due to these networks. Only the amplitude features of the copper adapters are given since the Fibre Channel performance requirements do not specify power losses for copper.

A.2.2 Unbalanced copper

Unbalanced copper has a much closer scheme used by most instruments than the balanced variants. The nominal characteristic impedance of the unbalanced copper variants is 75Ω. The interface adapters are therefore simpler.

A.2.3 Tap adapters for balanced copper

A.2.3.1 Balanced-balanced

Figure A-1 shows the design for the balanced-balanced tap adapter matching network when used with an instrument that offers a balanced 150Ω input.

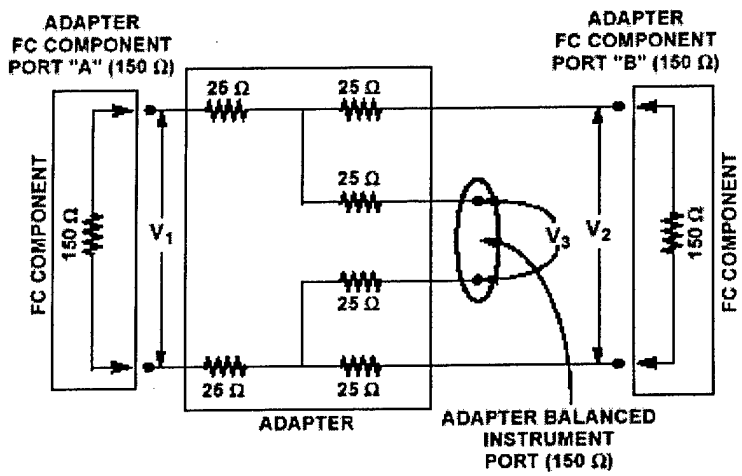

Figure A-1

A.2.3.2 Balanced-Unbalanced

In the more common case where unbalanced 50Ω instruments are used, the instrument port in figure A-1 is treated as a 150Ω balanced source and uses the balun shown in figure A-2 for the direct instrument connection. This scheme introduces more attenuation to the signal arriving at the actual instrument than the balanced-balanced alone but still deliver signals within the usable amplitude ranges for the test instruments.

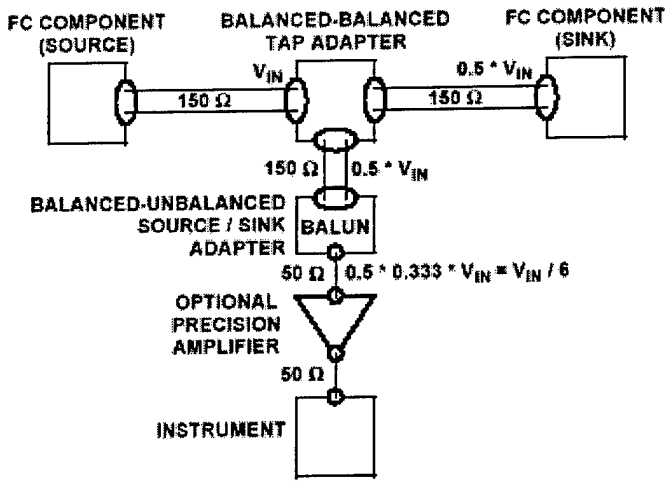

Figure A-2

A.2.4 Tap adapters for unbalanced copper

The circuit in figure A-3 shows the unbalanced copper configuration. This adapter is a simple configuration used to minimize power loss, however, it does assume that all ports are terminated with their characteristic impedance.

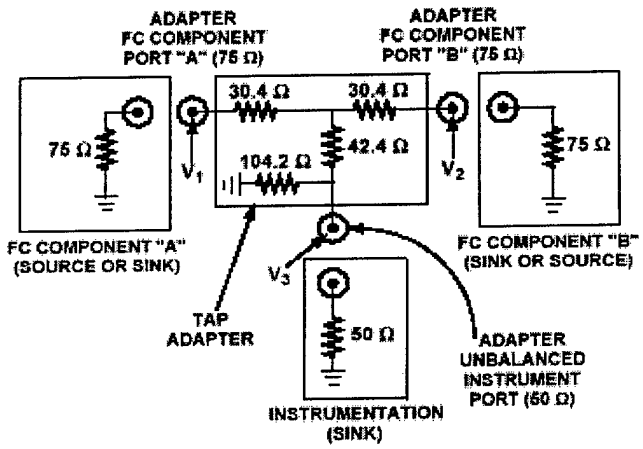

Figure A-3

A.2.5 Extracting a balanced trigger signal

Most instruments accept only single-ended trigger inputs, however the trigger source is differential. Using a single-ended trigger, extracted from only one side of a balanced signal, can affect the measured differential jitter when the measured balanced signals are actually unbalanced to a significant degree. This is because only one side of the balanced signal is used for the trigger timing and it may not be positioned the same in time as the differential trigger (differential skew). The scheme illustrated in figure A-4 allows extraction of a single-ended trigger input for the instrument but uses a differential signal for the actual trigger timing. Since this scheme is, only for trigger signals there is no need for a precise transfer function to be defined.

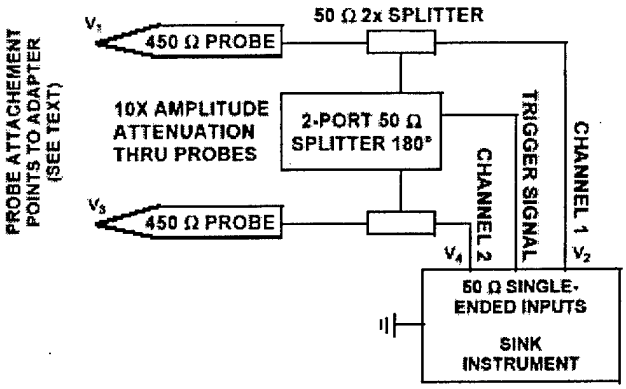

Figure A-4

A.3 Special considerations

A.3.1 Baluns

Baluns are used to connect unbalanced transmission lines to balanced transmission lines and, at the same time, to match one impedance level to another. The high-frequency nature of Fibre Channel causes the use Guanella baluns rather than the standard Faraday baluns. However, because of this choice in balun designs it is not known how the low frequency performance will be effected or even if low frequency performance is necessary. The Guanella balun consists of two coax-wound toroids of identical construction but differing connection as shown in figure A-5. Two cores (rather than one common core) are used to reduce sensitivity of the 150Ω balanced line. These baluns are intended to be an instrument-grade, therefore they are constructed from standard passive components to provide the necessary performance for test equipment with standard 50Ω ports.

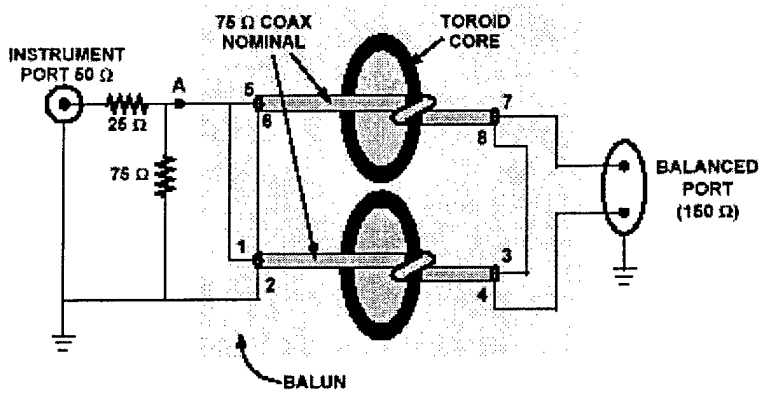

Figure A-5

A.3.2 Other adapter components

The resistors must have very low self-inductance, with good RF characteristics up to 2 GHz - 4 GHz. Precision thick film chip resistors are probably the best suitable. DC-blocking capacitors will probably not be required for the instrument adapter(s) based on the planned test configurations. The instruments involved provide their own AC-coupling elements (capacitors or transformers) where ground offsets are normally very low.