350076

JPRS 68159

3 November 1976

USSR

EAST EUROPE

USSR AND EASTERN EUROPE SCIENTIFIC ABSTRACTS

PHYSICS AND MATHEMATICS

No. 29

AMERICAN REVOLUTION BICENTENNIAL 1776-1976

Reproduced From
Best Available Copy

U. S. JOINT PUBLICATIONS RESEARCH SERVICE

DISTRIBUTION STATEMENT A
Approved for Public Release
Distribution Unlimited

20000317 090

NOTE

JPRS publications contain information primarily from foreign newspapers, periodicals and books, but also from news agency transmissions and broadcasts. Materials from foreign-language sources are translated; those from English-language sources are transcribed or reprinted, with the original phrasing and other characteristics retained.

Headlines, editorial reports, and material enclosed in brackets [] are supplied by JPRS. Processing indicators such as [Text] or [Excerpt] in the first line of each item, or following the last line of a brief, indicate how the original information was processed. Where no processing indicator is given, the information was summarized or extracted.

Unfamiliar names rendered phonetically or transliterated are enclosed in parentheses. Words or names preceded by a question mark and enclosed in parentheses were not clear in the original but have been supplied as appropriate in context. Other unattributed parenthetical notes within the body of an item originate with the source. Times within items are as given by source.

The contents of this publication in no way represent the policies, views or attitudes of the U.S. Government.

PROCUREMENT OF PUBLICATIONS

JPRS publications may be ordered from the National Technical Information Service, Springfield, Virginia 22151. In ordering, it is recommended that the JPRS number, title, date and author, if applicable, of publication be cited.

Current JPRS publications are announced in Government Reports Announcements issued semi-monthly by the National Technical Information Service, and are listed in the Monthly Catalog of U.S. Government Publications issued by the Superintendent of Documents, U.S. Government Printing Office, Washington, D.C. 20402.

Indexes to this report (by keyword, author, personal names, title and series) are available through Bell & Howell, Old Mansfield Road, Wooster, Ohio, 44691.

Correspondence pertaining to matters other than procurement may be addressed to Joint Publications Research Service, 1000 North Glebe Road, Arlington, Virginia 22201.

BIBLIOGRAPHIC DATA SHEET	1. Report No. JPRS 68159	2.	3. Recipient's Accession No.
4. Title and Subtitle USSR AND EASTERN EUROPE SCIENTIFIC ABSTRACTS - PHYSICS AND MATHEMATICS, No.29			5. Report Date 3 November 1976 6.
7. Author(s)			8. Performing Organization Rept. No.
9. Performing Organization Name and Address Joint Publications Research Service 1000 North Glebe Road Arlington, Virginia 22201			10. Project/Task/Work Unit No. 11. Contract/Grant No.
12. Sponsoring Organization Name and Address As above			13. Type of Report & Period Covered 14.

15. Supplementary Notes

16. Abstracts

The report contains abstracts on aerohydrodynamics, magnetohydrodynamics, thermodynamics, physics of crystals and semiconductors, molecular, atomic and plasma physics, optics, spectroscopy, physical measurements, and on theoretical and applied mathematics.

17. Key Words and Document Analysis. 17a. Descriptors

USSR	Lasers
Eastern Europe	Nuclear Physics
Mathematics	Structural Mechanics
Acoustics	Thermodynamics
Optics	Plasma Physics

17b. Identifiers/Open-Ended Terms

17c. COSATI Field/Group 12A, 20A, 20F, 20E, 20H, 20K, 20M, 20I

18. Availability Statement	19. Security Class (This Report)	21. No. of Pages
Unlimited Availability Sold by NTIS Springfield, Virginia 22151	UNCLASSIFIED	67
	20. Security Class (This Page) UNCLASSIFIED	22. Price

FORM NTIS-35 (REV. 3-72)

THIS FORM MAY BE REPRODUCED

USCOMM-DC 14952-P72

JPRS 68159

3 November 1976

USSR AND EASTERN EUROPE SCIENTIFIC ABSTRACTS

PHYSICS AND MATHEMATICS

No. 29

This serial publication contains abstracts of articles from USSR and Eastern Europe scientific and technical journals on the specific subjects reflected in the table of contents.

Photoreproductions of foreign-language sources may be obtained from the Photoduplication Service, Library of Congress, Washington, D. C. 20540. Requests should provide adequate identification both as to the source and the individual article(s) desired.

CONTENTS

PAGE

Acoustics..... 1
Crystals and Semiconductors..... 15
Electricity and Magnetism..... 21
Fluid Dynamics..... 22
Lasers and Masers. 29
Magnetohydrodynamics..... 42
Molecular Physics..... 47
Nuclear Physics..... 50
Optics and Spectroscopy..... 59
Superconductivity..... 61
Theoretical Physics..... 62

USSR UDC 534.2

VEL'MIN, V. A. and DUBROVSKIY, N. A., Acoustics Institute, Academy of Sciences USSR

CRITICAL RANGE OF ACTIVE HEARING IN DOLPHINS

Moscow AKUSTICHESKIY ZHURNAL in Russian Vol 22, No 4, Jul/Aug 76 pp 622-623

[Abstract of a paper delivered at the Scientific Session of the Joint Science Council of the Soviet Academy of Sciences on the Complex Problem of Physical and Technical Acoustics, the Science Council of the Soviet Academy of Sciences on the Problem of Acoustics, the Science Council of the Soviet Academy of Sciences on the Problem of Ultrasound and the Science Council of the Acoustics Institute of the Soviet Academy of Sciences Dedicated to the Ninety-Fifth Birthday of Hero of Socialist Labor N. N. Andreyev, 17 December 1975, Moscow]

[Abstract] An investigation is made of the critical range in that part of the dolphin's hearing apparatus that is used in analysis of echolocation signals. The results show a critical time range of 200-300 μs within which the characteristics of active hearing differ sharply from those outside this range. For instance the dolphin is able to distinguish intervals between pulse pairs only if these intervals are within the critical range; short

pulses of artificial reverberation exceeding the echo level by 50 dB affect the detection of an echo from a target if the interval between the reverb pulse and the echo pulse does not exceed the critical range, and so forth. Assuming that the critical range is a fundamental characteristic of active hearing, experiments were done to determine this range more precisely. It was found that the critical interval for the bottlenosed dolphin is 260 ± 25 μs. Experiments with long intervals showed that the dolphin is incapable of distinguishing intervals longer than the critical range. The confidence coefficient for the 260 μs result is 90%. References 3 Russian.

USSR UDC: 534.2

SCIENTIFIC SESSION OF THE JOINT SCIENCE COUNCIL OF THE SOVIET ACADEMY OF SCIENCES ON THE COMPLEX PROBLEM OF PHYSICAL AND TECHNICAL ACOUSTICS, THE SCIENCE COUNCIL OF THE SOVIET ACADEMY OF SCIENCES ON THE PROBLEM OF ACOUSTICS, THE SCIENCE COUNCIL OF THE SOVIET ACADEMY OF SCIENCES ON THE PROBLEM OF ULTRASOUND AND THE SCIENCE COUNCIL OF THE ACOUSTICS INSTITUTE OF THE SOVIET ACADEMY OF SCIENCES DEDICATED TO THE NINETY-FIFTH BIRTHDAY OF HERO OF SOCIALIST LABOR ACADEMICIAN N. N. ANDREYEV

Moscow AKUSTICHESKIY ZHURNAL in Russian Vol 22, No 4, Jul/Aug 76 pp 622-629

[Abstract] The scientific session of Joint Science Council of the Soviet Academy of Sciences on the Complex Problem of Physical and Technical Acoustics, the Science Council of the Soviet Academy of Sciences on the Problem of Acoustics, the Science Council of the Soviet Academy of Sciences on the Problem of Ultrasound and the Science Council of the Acoustics Institute of the Soviet Academy of Sciences Dedicated to the Ninety-Fifth Birthday of Hero of Socialist Labor Academician N. N. Andreyev was held 17 December 1975 in the conference hall of the Acoustics Institute. The opening talk was given by Professor L. M. Lyamshev, chairman of the Joint Science Council of the Soviet Academy of Sciences on the Complex Problem of Physical and Technical Acoustics. He spoke of N. N. Andreyev's leading role in establishment and

development of acoustics in the Soviet Union. The following papers were delivered at the session: "Critical Range of Active Hearing in Dolphins" by V. A. Vel'min and N. A. Dubrovskiy; "Magnetostriction Materials Under the Action of Compression" by I. P. Golyamina and V. K. Chulkova; "On the Generation of Sound by Thermal Sources" by L. M. Lyamshev and K. A. Naugol'nykh; "Nonlinear Phenomena in Magnetoelastic Media" by A. L. Polyakov; "Acoustics and Hydrodynamics of Some Marine Animals" by Ye. V. Romanenko. Recollections on N. N. Andreyev were presented by Professor V. S. Grigor'yev, Professor A. V. Rimskiy-Korsakov, Professor L. A. Chernov, S. G. Gershman and B. D. Tartakovskiy. Abstracts of the papers are given.

USSR UDC: 534.2

GOLYAMINA, V. P. and CHULKOVA, V. K., Acoustics Institute, Academy of Sciences USSR

MAGNETOSTRICTION MATERIALS UNDER THE ACTION OF COMPRESSION

Moscow AKUSTICHESKIY ZHURNAL in Russian Vol 22, No 4, Jul/Aug 76 pp 624-625

[Abstract of a paper delivered at the Scientific Session of the Joint Science Council of the Soviet Academy of Sciences on the Complex Problem of Physical and Technical Acoustics, the Science Council of the Soviet Academy of Sciences on the Problem of Acoustics, the Science Council of the Soviet Academy of Sciences on the Problem of Ultrasound and the Science Council of the Acoustics Institute of the Soviet Academy of Sciences Dedicated to the Ninety-Fifth Birthday of Hero of Socialist Labor N. N. Andreyev, 17 December 1975, Moscow]

[Abstract] The paper gives the results of an experimental study of the influence that compressive stresses have on the characteristics of magnetostriction materials that are of importance for acoustic emitters -- the magnetostriction constant a (ratio of the amplitude of the first harmonic of mechanical stress to the amplitude of the stimulating induction), the mechanical Q-factor and Young's modulus. The study specimens were Soviet

1/2

magnetostriction materials NP-2T nickel, 50KF Permendur and ferrites 21-SPA, F-42 and F-38. The range of compressive stress was 0-800 kg/cm^{2}in magnetic fields from zero to 1.5-3 times the field corresponding to the maximum coefficient of electromechanical coupling. The results showed that the Q-factor increases with compression for all materials with negative striction. In Permendur, which has positive striction, the Q-factor drops with compression in fields of practical interest, and increases only with very weak or very strong magnetization. The Young's modulus increases with compression for all materials, the effect being most pronounced in relatively weak fields in materials with a high coupling coefficient -- ferrite F-42 and Permendur. The influence of compressive stress on both the Young's modulus and the Q-factor decreases with increasing magnetic field intensity. At the same time, compression reduces the ΔE-effect of the material. It is concluded that the resonant frequency of acoustic emitters under working conditions is not appreciably changed by the influence of compression on the Young's modulus. References 8: 7 Russian, 1 Western.

2/2

USSR UDC: 534.2

LYAMSHEV, L. M. and NAUGOL'NYKH, K. A., Acoustics Institute, Academy of Sciences USSR

ON THE GENERATION OF SOUND BY THERMAL SOURCES

Moscow AKUSTICHESKIY ZHURNAL in Russian Vol 22, No 4, Jul/Aug 76 pp 625-627

[Abstract of a paper delivered at the Scientific Session of the Joint Science Council of the Soviet Academy of Sciences on the Complex Problem of Physical and Technical Acoustics, the Science Council of the Soviet Academy of Sciences on the Problem of Acoustics, the Science Council of the Soviet Academy of Sciences on the Problem of Ultrasound and the Science Council of the Acoustics Institute of the Soviet Academy of Sciences Dedicated to the Ninety-Fifth Birthday of Hero of Socialist Labor N. N. Andreyev, 17 December 1975, Moscow]

[Abstract] A simplified model is proposed for explaining the principal features of sound emission into the ambient medium when energy is rapidly released into a limited region of matter, as frequently occurs when intense optical emission interacts with matter. Curves are given showing the profile of the spherical sound wave generated by such a thermal source for the limiting cases $R_0 \gg c\tau$ and $R_0 \ll c\tau$ (R_0 is the bounded spherical region where the

given energy release occurs in time τ, and c is the speed of sound). An expression is found for the pressure in the vapor bubble formed when the energy density is sufficient to transform liquid to vapor. An approximate analysis is made of the hydrodynamic characteristics of the process of sound emission by thermal sources. References 3: 2 Russian, 1 Western.

USSR UDC: 534.2

POLYAKOVA, A. L., Acoustics Institute, Academy of Sciences USSR

NONLINEAR PHENOMENA IN MAGNETOELASTIC MEDIA

Moscow AKUSTICHESKIY ZHURNAL in Russian Vol 22, No 4, Jul/Aug 76 pp 627-628

[Abstract of a paper delivered at the Scientific Session of the Joint Science Council of the Soviet Academy of Sciences on the Complex Problem of Physical and Technical Acoustics, the Science Council of the Soviet Academy of Sciences on the Problem of Acoustics, the Science Council of the Soviet Academy of Sciences on the Problem of Ultrasound and the Science Council of the Acoustics Institute of the Soviet Academy of Sciences Dedicated to the Ninety Fifth Birthday of Hero of Socialist Labor N. N. Andreyev, 17 December 1975, Moscow]

[Abstract] An examination is made of nonlinear phenomena described by the higher terms of the expansion for magnetoelastic energy with respect to magnetization and mechanical stress. An investigation is made of magnetostriction stresses in a material with magnetization $M = M_0 + M_1 \sin \omega t$. The magnitudes of the first three stress harmonics are found as a function of the quantities M_0 and M_1, which are taken as arbitrary. Conditions are found that maximize the first harmonic. A method is proposed for determining the

magnetoelastic constants from experimental data. Values of the maximum amplitude of the first harmonic of magnetostriction stress are calculated for a number of materials used in sound emitters -- nickel, Permendur, ferrites and so forth. The method of successive approximations is applied to analysis of propagation of longitudinal and transverse waves in a medium having both the magnetoelastic nonlinearity considered above and ordinary nonlinearity of elastic properties. It is shown that a second harmonic arises in the longitudinal wave that increases with distance, the nonlinear parameter being a function of the constant of magnetization M_0 applied in the direction of sound propagation. This parameter is $\Gamma \approx \Gamma_{ac} + AM_0^2$, where Γ_{ac} is the nonlinear parameter with consideration of elastic nonlinearity alone, and A is the combination of elastic and magnetoelastic constants. Estimates show that for practically realizable values of M_0 the nonlinear parameter Γ may be made an order of magnitude greater than Γ_{ac}. References 2 Russian.

USSR UDC: 534.2

ROMANENKO, YE. V., Institute of Evolutionary Morphology and Ecology of Animals imeni A. N. Severtsov, Academy of Sciences USSR

ACOUSTICS AND HYDRODYNAMICS OF SOME MARINE ANIMALS

Moscow AKUSTICHESKIY ZHURNAL in Russian Vol 22, No 4, Jul/Aug 76 pp 628-629

[Abstract of a paper delivered at the Scientific Session of the Joint Science Council of the Soviet Academy of Sciences on the Complex Problem of Physical and Technical Acoustics, the Science Council of the Soviet Academy of Sciences on the Problem of Acoustics, the Science Council of the Soviet Academy of Sciences on the Problem of Ultrasound and the Science Council of the Acoustics Institute of the Soviet Academy of Sciences Dedicated to the Ninety-Fifth Birthday of Hero of Socialist Labor N. N. Andreyev, 17 December 1975, Moscow]

[Abstract] A survey of research on acoustics and hydrodynamics of marine mammals, primarily dolphins. Emphasis is placed on the use of self-contained miniaturized pickups and receivers, tape recorders, noise generators, biological monitors and so forth that are attached directly to the animals, allowing them freedom of movement throughout an experiment. Among the new
1/2

facts acquired in this way: dolphins emit high-frequency echolocation pulses by a nonresonant mechanism; previously undetected low-frequency pulses with a fundamental tone of 300-400 Hz are emitted by dolphins with a weakly resonant mechanism; the duration of echolocation pulses emitted by dolphins differs for different directions -- pulses emitted in the forward direction are twice as long as those emitted to the sides; dolphins have a built-in shield to attenuate their own perception of the signals they emit so that these high-intensity sounds do not interfere with their acute hearing; the boundary layer surrounding the dolphin is partly laminarized, enabling the animal to swim with less effort; the fur covering of seals modifies the boundary layer, reducing drag. References 8: 4 Russian, 4 Western.

2/2

USSR UDC: 534.25-14

KALININ, V. L., Murmansk Marine Higher Engineering Academy

ON A METHOD OF DETERMINING THE DEPTH OF SUBMERSION OF UNDERWATER OBJECTS UNDER CONDITIONS OF A REFRACTING MEDIUM

Moscow AKUSTICHESKIY ZHURNAL in Russian Vol 22, No 4, Jul/Aug 76 pp 609-611
manuscript received 2 Feb 76

[Abstract] It is shown that the error due to refraction in determining the coordinates of an underwater object can be reduced by appropriate processing of depth-finder readings without using detailed hydrophysical information. It is assumed that the geometric theory of sound propagation is applicable, that the underwater object does not change its depth during observation, that there is no horizontal gradient in the speed of sound in the region of observation, and that the function of the vertical gradient of the speed of sound is time-independent. On the basis of Snell's law the author derives expressions for the length of an acoustic beam reflected from the underwater object, and for the horizontal distance to the object. A numerical example is given. References 4 Russian.

1/1

USSR UDC: 534.222

POLYANSKAYA, V. A., Acoustics Institute, Academy of Sciences USSR

CALCULATION OF THE FIELD AMPLITUDE WHEN RAYS ARE REFLECTED FROM A CURVED BOUNDARY IN A MEDIUM

Moscow AKUSTICHESKIY ZHURNAL in Russian Vol 22, No 4, Jul/Aug 76 pp 616-617
manuscript received 17 Oct 75

[Abstract] It is shown that when calculating fields by ray tracing in a three-dimensional medium with arbitrary variation of parameters, the presence of totally or partially reflecting interfaces with nonzero first derivatives of nearby parameters makes it necessary to introduce additional boundary conditions to account for these interfaces. Formulas are derived for the general case of reflection of sonic beams from an arbitrary fairly smooth curvilinear boundary. It is noted that disregarding the correction to the boundary conditions results in considerable loss of accuracy, particularly in the case of multiple reflections, as when calculating repeated reflection of sound waves from the ocean surface and bottom. References 4: 2 Russian, 2 Western.

1/1

USSR UDC: 534.29

YESIPOV, I. B., ZVEREV, V. A., KALACHEV, A. I. and NAUGOL'NYKH, K. A., Acoustics Institute, Academy of Sciences USSR, Radio Physics Scientific Research Institute, Gor'kiy

ON LOW-FREQUENCY PARAMETRIC EMISSION OF SOUND

Moscow AKUSTICHESKIY ZHURNAL in Russian Vol 22, No 4, Jul/Aug 76 pp 606-608 manuscript received 23 Jan 75

[Abstract] During emission of an intense amplitude-modulated sound wave, nonlinear parametric interaction of the signal components in the medium causes generation and independent propagation of a wave with the modulation frequency. The effect of parametric emission has been studied previously on comparatively high frequencies; in this paper the authors give the results of an experimental study of low-frequency parametric emission. The carrier wave on 105 and 123 kHz was generated by a piezoelectric disk transducer. The modulation frequency varied over a range of 1-5 kHz. The transducer was 92.5 cm in diameter, and was placed at a depth of 6 m below the surface of the sea in a position such that the main lobe of the radiation pattern touched neither the bottom nor the surface. Sound reception was by a spherical pickup 5 cm in diameter located 80 m from the emitter. Curves are
1/2

given showing the signal level in dB as a function of angle. It was found that the curve becomes sharper with increasing modulation frequency. It was also found that the amplitude of the received signal increases as the square of the voltage across the emitter, whereas the pumping level changes linearly. The amplitude of the received signal is also a linear function of the percentage modulation. The results of this study confirm the feasibility of directional parametric emission on 1-5 kHz using an emitter that has comparable or smaller dimensions than the wavelength of the low-frequency signal. References 4: 3 Russian, 1 Western.

2/2

USSR UDC: 534.26

KOROVKIN, A. N.

DIFFRACTION OF SOUND OVER A WIDE BARRIER

Moscow AKUSTICHESKIY ZHURNAL in Russian Vol 22, No 4, Jul/Aug 76 pp 540-545
manuscript received 4 Oct 74

[Russian abstract provided by the source]

[Text] An examination is made of the problem of diffraction of a plane sound wave by a wide trapezoidal barrier having different flat faces, both ideal and with acoustic impedance. The solution is found by considering the sequential diffraction of sound by the edges of the barrier. Formulas are derived for the acoustic pressure in the "deep" shadow zone. The theoretical results are compared with experimental data. References 8: 5 Russian, 3 Western.

1/1

USSR UDC: 534.232-8

L'VOVSKAYA, G. F., Acoustics Institute, Academy of Sciences USSR

ON A METHOD OF INCREASING THE AMPLIFICATION FACTOR OF A DISK-AND-ROD ULTRASONIC TOOL WITH CONVERSION OF THE DIRECTION OF VIBRATIONS

Moscow AKUSTICHESKIY ZHURNAL in Russian Vol 22, No 4, Jul/Aug 76 pp 613-615
manuscript received 24 Dec 75

[Abstract] The author calculates the normal modes and coefficients of amplification of a disk-and-rod ultrasonic tool in which the thickness decreases by a power law from the periphery toward the center of the disk. The results are comparable with the case of a disk of constant thickness. Curves are given showing the resonant frequencies and amplification factors plotted against the dimensional characteristic $H - h_0$, where H is half the overall length of the working rod, and h_0 is half the thickness of the disk at the center. The results show that a disk of variable thickness gives higher amplification factors than one of constant thickness. References 4: 3 Russian, 1 Western.

1/1

USSR UDC: 534.2

PAVLOV, V. I., Physics Department, Moscow State University imeni M. V. Lomonosov

ON ABSORPTION OF SOUND IN A MEDIUM WITH NOISE

Moscow AKUSTICHESKIY ZHURNAL in Russian Vol 22, No 4, Jul/Aug 76 pp 580-585
manuscript received 9 Apr 75

[Abstract] An analysis is made in perturbation theory of the nonlinear interaction of a monochromatic sound wave with noise during propagation in a fluid. The case of interaction between a high-frequency signal and low-frequency noise is emphasized. It is shown that in certain cases the signal energy is transferred to the noise, resulting in anomalously high signal attenuation. The proposed mechanism is confirmed by comparison with experimental data. References 7: 5 Russian, 2 Western.

1/1

USSR UDC: 534.232

BALAKSHIY, V. I., PARYGIN, V. N. and FILIPPOV, B. P., Physics Department, Moscow State University imeni M. V. Lomonosov

ANGULAR DISPLACEMENT OF AN ACOUSTIC BEAM EXCITED BY A WEDGE-SHAPED PIEZOELECTRIC TRANSDUCER

Moscow AKUSTICHESKIY ZHURNAL in Russian Vol 22, No 4, Jul/Aug 76 pp 596-598
manuscript received 20 Feb 75

[Abstract] An analysis is made of the problem of excitation of sound waves by a wedge-shaped piezoelectric transducer. It is shown that the wave front rotates with a change in frequency, the angle of turn being directly proportional to the taper angle of the wedge. As the frequency f of the sonic beam changes, the angular displacement of the beam conforms to the relation $df/d\gamma$, where $\gamma = 2\pi fh/v_0$, h is the thickness of an equivalent plane-parallel plate, and v_0 is the speed of sound in the piezoelectric. This effect of angular displacement of a sonic beam can be used to adjust the angle of incidence of the light in acousto-optical deflectors. Experiments with lithium niobate transducers confirmed the effect. References 5: 2 Russian, 3 Western.

1/1

USSR UDC: 534.232

KONEVSKIY, I. N. and SURIKOV, B. S., State Scientific Research and Design Institute of the Rare Metals Industry

INVESTIGATION OF TWO-LAYERED SONIC LENSES

Moscow AKUSTICHESKIY ZHURNAL in Russian Vol 22, No 4, Jul/Aug 76 pp 526-530
manuscript received 25 Jul 75

[Abstract] A theoretical and experimental study is made of the field in the focal plane of lenses with the Lüneberg property of focusing a plane acoustic wave on a surface lying opposite, and having an index of refraction that varies from the center to the edge in accordance with the law $n(r) = \sqrt{2 - r^2}$ (where r is the instantaneous normalized radius). In practice, such lenses are multilayered structures in which the constant indices of refraction of the layers give a stepwise approximation to the given law $n(r)$. To distinguish them from Lüneberg lenses they are called spheroidal or cylindroidal lenses. The authors consider two-layered spheroidal and cylindroidal lenses with concentric or coaxial layers having different indices of refraction. Curves are given for the distribution of sonic pressure in the focal plane of the lenses. The results show that two-layered lenses of the type considered may have sharp radiation patterns with width of the order of a few degrees. References 6 Russian.
1/1

USSR UDC: 534.222.2

BAKHVALOV, N. S., ZHILEYKIN, YA. M., ZABOLOTSKAYA, YE. A. and KHOKHLOV, R. V., Moscow State University imeni M. V. Lomonosov, Department of Computational Mathematics and Cybernetics

NONLINEAR PROPAGATION OF A SOUND BEAM IN A NONDISSIPATIVE MEDIUM

Moscow AKUSTICHESKIY ZHURNAL in Russian Vol 22, No 4, Jul/Aug 76 pp 487-491
manuscript received 15 Sep 75

[Russian abstract provided by the source]

[Text] A nonlinear acoustics equation is numerically integrated for finite beams with time-periodic boundary condition and signal amplitude diminishing from the center of the beam toward the edges. Figures are given that show the shape of the density perturbation for different values of the parameter that defines the relative contribution of nonlinear and diffraction effects at different distances from the boundary of the nonlinear medium and at different points of the beam cross section. It is shown that there is an appreciable difference between the nonlinear distortions in the sonic beam and distortions of a plane wave. The region of shock wave formation in the beam is constructed for a given amplitude distribution.
1/1

USSR

UDC: 534.232-8

L'VOVSKAYA, G. F., Acoustics Institute, Academy of Sciences USSR

THEORETICAL STUDY OF THE CHARACTERISTICS OF A DISK-AND-ROD ULTRASONIC TOOL

Moscow AKUSTICHESKIY ZHURNAL in Russian Vol 22, No 4, Jul/Aug 76 pp 552-557
manuscript received 24 Dec 75

[Abstract] A theoretical study is done on the disk-and-rod ultrasonic tool shown in the diagram. The analysis is based on a tool with the following parameters: $R = 52$ mm, $R_2 = 41.5$ mm, $R_3 = 33.5$ mm, $r_0 = 6$ mm, $h = 4.5$ mm, and H varies over a wide range with step of 1 mm (minimum $H = 30$ mm) $c_1 = 5400$ m/s, $c_2 = 5790$ m/s, $\rho_1 = 4.5$ g/cc, $\rho_2 = 5.2$ g/cc, $\nu_1 = \nu_2 = 0.29$, $l(R_m) = 303$ N/m·A, $\mu^{\varepsilon}(R_m) = 10$, $\alpha_1 = 10^{-3}$ and 10^{-4}, $\alpha_2 = 10^{-2}$, where c_i, ρ_i, ν_i are the velocity of longitudinal Young waves, density and Poisson's ratio respectively of the active ($i = 2$) and passive ($i = 1$) materials, $l(R_m)$ is the magnetostriction constant of the annular ferrite transducer on the middle radius of the ring, $\mu^{\varepsilon}(R_m)$ is the permeability of the "constricted" ferrite reduced to the permeability of a vacuum on the middle radius of the ring, and α_1 and α_2 are the coefficients of mechanical losses in the passive and active materials respectively. Calculations are done both for an unloaded tool, and for a loaded tool where the ratio of the specific mechanical resistance of the load to

1/2

USSR

L'VOVSKAYA, G. F., AKUSTICHESKIY ZHURNAL, Vol 22, No 4, Jul/Aug 76 pp 552-557

the wave impedance of the passive material is $\zeta = 10^{-3}$. The results can be used in optimizing the design of ultrasonic tools of this type. References 3 Russian.

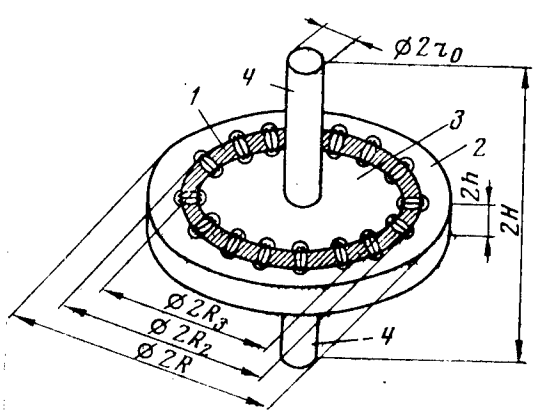

1--annular magnetostriction transducer;
2--outer passive part of the disk;
3--inner passive part of the disk;
4--working rod.

2/2

USSR UDC: 621.396.67.014.1

OSTROVSKIY, D. V.

STATISTICAL PARAMETERS OF A FLAT DISCRETE ANTENNA WITH CONSIDERATION OF THE INTERACTION BETWEEN ELEMENTS

Moscow AKUSTICHESKIY ZHURNAL in Russian Vol 22, No 4, Jul/Aug 76 pp 576-579
manuscript received 8 Dec 74

[Abstract] An examination is made of the statistical properties of discrete acoustic radiators with consideration of the interaction between elements. Exact formulas are derived for generalized Rayleigh distribution parameters of the modulus of directional gain as a function of amplitude-phase errors and element failures. Approximate formulas are found, assuming that random errors and failures do not cause additional redistribution of the vibrational velocities of the elements. It is shown that the resultant simplification has no effect on the way that the distribution parameters depend on errors, and that these parameters coincide for identical levels of directional gain. A numerical example is considered, and a comparison of curves for the standard deviation of the modulus of directional gain calculated from the proposed formulas shows that consideration of phase errors increases the standard deviation by 20-25%. Thus the variance in parameters of the elements
1/2

causes a certain redistribution of vibrational velocities with respect to the antenna aperture. The simplified formulas are applicable for engineering estimates with a correction factor. References 11: 9 Russian, 2 Western.

2/2

USSR

UDC: 534.26

ANDEBURA, V. A.

ON THE ACOUSTICAL-MECHANICAL CHARACTERISTICS OF SPHEROIDAL EMITTERS AND SCATTERERS

Moscow AKUSTICHESKIY ZHURNAL in Russian Vol 22, No 4, Jul/Aug 76 pp 481-486 manuscript received 21 Apr 75

[Abstract] Expressions are derived for the acoustic characteristics of oscillating spheroidal emitters and scatterers of arbitrary configuration with small wave dimensions, i. e. in the long-wave approximation. The asymptotic behavior of radial spheroidal functions is examined for the case of small values of the wave parameter. The force acting on a rigid spheroid in a sonic field is found, and an expression is given for this force in the limiting low-frequency case. It is shown that the axial force acting on a rigid sphere for low-frequency incident waves is $3\pi/4$ times greater than for a disk of the same diameter assuming identical incident wave pressure. The axial force is proportional to the ratio of diameter to wavelength practically up to 0.5 within wide limits of change in configuration for an oblate spheroid. References 8: 6 Russian, 2 Western.

1/1

USSR

FOMIN, I. A., Institute of Theoretical Physics imeni L. D. Landau, Academy of Sciences USSR

TRANSVERSE ACOUSTIC IMPEDANCE OF A NORMAL FERMI LIQUID

Moscow PIS'MA V ZHURNAL EKSPERIMENTAL'NOY I TEORETICHESKOY FIZIKI in Russian Vol 24, No 2, 20 Jul 76 pp 90-93 manuscript received 18 Jun 76

[Abstract] The paper gives results of calculation of transverse acoustic impedance of helium-3 in the high-frequency region, i. e. where the frequency of oscillations ω and the time τ between collisions of quasi-particles satisfy the strong inequality $\omega\tau \gg 1$, with consideration of Fermi-liquid effects, assuming that the function $F(\theta)$ that describes the interaction of quasi-particles in Landau theory can be approximated by two spherical harmonics: $F(\theta) = F_0 + F_1 \cos\theta$. A table is given summarizing important data for the real and imaginary parts of the transverse impedance for different values of F_1 in the case of purely diffuse reflection. It is shown that impedance measurement can be used as an argument for the existence of transverse null sound only when quantitative agreement is observed between theory and experimental data. References 7: 4 Russian, 3 Western.

1/1

USSR UDC:621.376.234

ZASTAVNYY, A. V., KOROL', V. M. and LYSENKO, P. L., Scientific Research Institute of Physics, Rostov-na-Donu State University

INFLUENCE THAT BOMBARDMENT WITH 5.5 MeV PARTICLES HAS ON THE CHARACTERISTICS OF p-Si ION-DOPED SEMICONDUCTOR DETECTORS

Moscow PRIBORY I TEKHNIKA EKSPERIMENTA in Russian No 4, Jul/Aug 76 pp 82-83 manuscript received 28 Mar 75

[Russian abstract provided by the source]

[Text] The paper compares the characteristics of ion-doped p-Si detectors and n-Si surface-barrier detectors after exposure to α-particles with energy of 5.5 MeV. It is shown that the spectrometric characteristics of the ion-doped detectors are more stable. Doses several times higher than for the surface-barrier detectors were required to reduce the energy resolution of the ion-doped detectors by a factor of two. References 7: 6 Russian, 1 Western.

1/1

USSR UDC 621.382.2

TAKIBAYEV, ZH. S., GRISHCHENKO, V. F., GERACIMENKO, N. N., and GORELKINSKIY, YU. V.

CURRENT-VOLTAGE CHARACTERISTICS OF SILICON p-n JUNCTIONS BOMBARDED WITH SMALL DOSES of ^{235}U FISSION FRAGMENTS

Alma-Ata IZVESTIYA AKADEMII NAUK KAZAKHSKOY SSR SERIYA FIZIKO-MATEMATICHESKAYA in Russian No 4, 1976 pp 73-75 manuscript received 1 Mar 76

[Abstract] Current-voltage characteristics of silicon junctions bombarded with ^{235}U fission fragments were studied. The fragments were generated by a thin layer of ^{235}U bombarded with neutrons. An analysis is made of the recombination parameter m that characterizes the processes taking place on the junction surface. The results show that individual fission fragments (heavy nuclei) can result in significant changes in the current-voltage characteristics of p-n junctions. Depending on the angle of incidence of an individual fragment, damage occurs either in the space charge region or on the surface, which leads to changes in the forward or reverse branches of the current-voltage characteristic. There are also cases of simultaneous damage to the surface and the space charge region. References 7: 2 Russian, 5 Western.

1/1

USSR UDC 621.315.592

KARDO-SYSOYEV, A. F., PANYUTIN, YE. A., and CHASHNIKOV, I. G., Technical Physics Institute imeni A. F. Ioffe Academy of Sciences USSR, Leningrad

S-SHAPED SWITCHING IN SEMICONDUCTOR STRUCTURES AT HIGH CURRENT DENSITIES

FIZIKA I TEKHNIKA POLUPROVODNIKOV in Russian Vol 10, No 8, 1976 pp 1486-1489
manuscript received 11 Mar 76

[Russian abstract provided by the source]

[Text] At high current densities in a semiconductor with impact ionization, the space charge responsible for the S shape of the current-voltage characteristic is restructured. Theoretical analysis of the current-voltage characteristics considering this mechanism has been performed on models assuming homogeneous distribution of current density in the structures with plane-parallel junctions. Agreement between theoretical and experimental current-voltage characteristics was observed only up to the cutoff currents on sections with negative differential resistance. The discrepancy between theory and experiment was attributed to formation of filamentary currents, but the distribution of current density was not experimentally studied. This paper deals with
1/2

analysis of such experiments on planar n-i-n and p-i-p structures. The experiments were performed by recording the recombination radiation from structures using a pulse image converter. It was found that the distribution of current density is heterogeneous and similar to the pattern of geometric current spread from a "point" region, the current density increasing in the direction from the emitter to the noninjecting contact. The experiments performed do not confirm the hypothetical filamentary currents a few μm in diameter mentioned in the literature. It is shown that consideration of spreading of current lines weakens the rigid requirement for ratio of hole and electron current at the boundary of the impact ionization region. References 8: 2 Russian, 6 Western.

2/2

USSR UDC 621.315.592

VINETSKIY, V. L. SHEYNKMAN, M. K. and YASKOVETS, I. I., Institute of Physics, Academy of Sciences UkSSR; Institute of Semiconductors, Academy of Sciences UkSSR, Kiev

THE NATURE OF THE ANOMALOUS TEMPERATURE DEPENDENCE OF DARK CONDUCTIVITY OF SEMICONDUCTORS

Kiev FIZIKA I TEKHNIKA POLUPROVODNIKOV in Russian Vol 10, No 8, 1976 pp 1535-1539 manuscript received 5 Apr 76

[Russian abstract provided by the source]

[Text] A theoretical study is presented of the nature of the "negative" temperature dependence of equilibrium concentration of current carriers ($dn/dT < 0$) in a narrow, low-resistance surface area in a high-resistance semiconductor. It is shown that in a semiconductor with one row of compensating acceptor levels it is very difficult to realize a negative temperature dependence. However, when a heterojunction is present between the low-resistance surface and the high-resistance volume of the semiconductor, a negative dependence may obtain; the equilibrium conductivity is decreased by 1/2

several orders of magnitude as the temperature increases by about 100 K, which agrees with the available experimental data on the conductivity of CdS and CdSe films. References 6: 3 Russian, 3 Western.

USSR

MANENKOV, A. A., MILYAYEV, V. A., MIKHAYLOVA, G. N., and SEFEROV, A. S., Institute of Physics imeni P. N. Lebedev Academy of Sciences USSR

DETECTION OF LARGE ELECTRON-HOLE BUBBLES IN GERMANIUM AND DETERMINATION OF THEIR PARAMETERS FROM SHF CONDUCTIVITY MEASUREMENTS

Moscow PISMA V ZHURNAL EKSPERIMENTAL'NOY I TEORETICHESKOY FIZIKI in Russian Vol 24, No 3, Aug 76 pp 141-144 manuscript received 28 Jun 76

[Abstract] The basic parameters of large electron-hole bubbles in nonuniformly compressed germanium were determined by the shf conductivity and breakdown method, which had also been used earlier for small bubbles. The germanium specimens for this study were disks 4.0 mm in diameter and 2.0 mm thick, free of dislocations and with a residual impurity concentration less than $2.6 \cdot 10^{11}$ cm^{-3}, under a pressure of 950 kgf/cm^2. The shf conductivity and its kinetics were measured at 10 GHz under laser excitation at the 1.06 μm wavelength, at temperatures from 4.2 to 1.3 K. The amplitude of the quasisteady signal was found to decrease rapidly with decreasing temperature, approaching zero at 2.8 K, while the quasisteady period became longer. Below 2.8 K the signal was found to decrease exponentially with a time constant 750 μs, with a polarity reversal and shorter time constant at 1.3 K. Evaporation from a bubble was

found to become negligible only at or below 2.8 K, with Auger emission becoming the dominant process. A "hot" shf breakdown was found to occur in the presence of a large bubble, the characteristics of the exciton breakdown being here radically different than in undeformed germanium. The absence here of a peak and a valley indicates that one large bubble, with a surface much smaller than that of a cloud of small bubbles, does not influence the buildup of an electron avalanche. The results of these measurements confirm the existence of a large electron-hole bubble in deformed germanium 1.0 mm in diameter, with a particle concentration $n_0 = 2.5 \cdot 10^{16}$ cm^{-3}, a bond energy $E_0 = 4.6$ meV, and a lifetime $\tau_0 = 500$ μs. Figures 2; references 14: 6 Russian, 8 Western.

USSR

VVEDENSKIY, V. L., Institute of Problems in Physics, Academy of Sciences USSR

CRYSTALLIZATION OF STRATIFIED He^3-He^4 SOLUTIONS

Moscow PISMA V ZHURNAL EKSPERIMENTAL'NOY I TEORETICHESKOY FIZIKI in Russian
Vol 24, No 3, Aug 76 pp 152-156 manuscript received 1 Jul 76

[Abstract] A study was made concerning the crystallization of stratified He^3-He^4 solutions, with a lower He^3 concentration and a higher He^3 concentration. On the basis of nuclear-magnetic-resonance measurements, phase diagrams have been plotted in temperature-pressure coordinates within the 0.25-0.38 K and 25-28 atm range as well as in temperature-concentration (He^3,%) coordinates. The experiment has produced new evidence about the phase constitution and the critical points. The three-phase $He^3(liq)_{l.c}$-bcc-$He^3(liq)_{h.c}$ equilibrium line was found to split at 0.38 K into an $He^3(liq)_{l.c}$-$bcc_{l.c}$-$bcc_{h.c}$-$He^3(liq)_{h.c}$ line and an $He^3(liq)_{l.c}$-$bcc_{h.c}$-$He^3(liq)_{h.c}$ line (l.c = lower concentration, h.c = higher concentration). Only crystals with the same approximately 52% He^3

1/2

USSR

VVEDENSKIY, V. L., PISMA V ZHURNAL EKSPERIMENTAL'NOY I TEORETICHESKOY FIZIKI
Vol 24, No 3, Aug 76 pp 152-156

concentration were found to grow above 0.38 K. The experiment has also confirmed the bcc structure of crystals with a higher than about 4% He^3 concentration down to that splitting equilibrium line and the transition here to hcp crystals at approximately 0.3 K. Figures 3; references 8: 4 Russian, 4 Western.

2/2

USSR UDC 621.315.592.3

DUBCHAK, A. P., LYSENKO, V. S., NAZAROV, A. N., ATAMANENKO, V. T., LOKSHIN, M.P., and POLISHCHUK, YU. YA., Institute of Semiconductors, Academy of Sciences UkrSSR, Kiev

STUDYING THE DIELECTRIC-SEMICONDUCTOR INTERFACE BY THE METHOD OF THERMALLY STIMULATED DISCHARGE AFTER B^+ ION IMPLANTATION

Kiev UKRAINSKIY FIZICHESKIY ZHURNAL in Russian Vol 21, No 7, Jul 76 pp 1197-1201 manuscript received 27 Oct 75 (final version 12 Jan 76)

[Abstract] The method of thermally stimulated discharge is useful for studying the changes in the electrophysical characteristics of MOS structures after ion implantation, inasmuch as neither current-voltage curves nor capacitance-voltage curves yield sufficient information about the radiation defects and about the energy distribution of traps. Such a study was made on Me-SiO_2-Si and Me-Al_2O_3-SiO_2-Si structures with an oxide layer 1000-2000 Å thick. The specimens were doped with B^+ ions of sufficient energy to reach the dielectric (oxide)-semiconductor interface and in amounts varying from 0.1 to 10 $\mu C/cm^2$.

1/2

USSR

DUBCHAK, A. P., LYSENKO, V. S., NAZAROV, A. N., ATAMANENKO, V. T., LOKSHIN, M. P., and POLISHCHUK, YU. YA., UKRAINSKIY FIZICHESKIY ZHURNAL Vol 21, No 7, Jul 76 pp 1197-1201

The temperature spectra of the discharge current were measured, and two peaks were recorded: at 84 and 216 K for Si-SiO_2 at 133 and 250 K for Al_2O_3-SiO_2-Si, their widths and heights depending on the implantation dose. The results, combined with theoretical calculations, indicate that implantation of boron ions has established a system of energy levels in two-layer as well as in three-layer structures within the upper half of the forbidden band. Some of these levels seem to be analogous to those caused by radiation defects, but their true nature is not known yet. Figures 3; references 24: 8 Russian, 16 Western.

2/2

USSR UDC 533.951

KARPLYUK, K. S., Kiev State University imeni T. G. Shevchenko

EXCITATION OF SURFACE WAVES DURING DIFFRACTION OF A PLANE WAVE AT A HALF-PLANE PLASMA-DIELECTRIC BOUNDARY

Kiev UKRAINSKIY FIZICHESKIY ZHURNAL in Russian Vol 21, No 7, Jul 76
pp 1167-1173 manuscript received 5 Jan 76

[Abstract] A nonhomogeneous plasma-dielectric interface may, unlike a homogeneous one, serve as a receiver antenna for surface waves excited by a plane wave impinging on it and diffracted at an inhomogeneity. This situation is analyzed here for the case of a plane electromagnetic wave which, coming from the dielectric side, impinges on and is diffracted at an ideally conducting half-plane boundary with the plasma. The problem is solved on the basis of Maxwell's fundamental field equations with appropriate boundary conditions. In the simplest model one assumes the motion of ions and the thermal motion of electrons to be negligible in the plasma, with the latter being regarded as another dielectric. It is sufficient to calculate only the tangential component of the electric field intensity, all other E and H components being expressible in terms of the latter. An exact analytic solution is found which, with the

given boundary conditions, leads to paired integral equations and these in turn are solved by the factorization method. Generally it is necessary to use numerical methods for evaluating the integrals. The method of steepest descent may be used in some cases such as, for instance, the far-field zone of the dielectric. Figures 3; references : 5 Western.

USSR UDC: 532.546

TAMARIN, A. I., TEPLITSKIY, YU. S. and LIVSHITS, YU. YE., Institute of Heat and Mass Exchange imeni A. V. Lykov, Academy of Sciences BSSR, Minsk

ON THE PRINCIPLES GOVERNING MOTION OF GAS BUBBLES IN A FLUIDIZED BED

Minsk INZHENERNO-FIZICHESKIY ZHURNAL in Russian Vol 31, No 2 Aug 76 pp 323-327 manuscript received 10 Aug 75

[Abstract] An experimental study is done on the dimensions of gas bubbles in a nonhomogeneous fluidized bed of sand (particle size $d = 0.23$ mm, velocity at onset of fluidization $u_0 = 6$ cm/s) and silica gel ($d = 0.19$ mm, $u_0 = 2$ cm/s). The experiments were done in a column 300 mm in diameter by a dynamometer sensor method similar to that described by A. I. Tamarin, I. Z. Mats and G. G. Tyukhay in the collection "Teplo- i massoperenos v dispersnykh sistemakh" [Heat and Mass Exchange in Dispersed Systems], Minsk, 1968. Experimental data in the literature on bubble sizes are generalized on the basis of the proposed model of bubble expansion in a fluidized bed. The formula derived for bubble size is

$$D_b = \frac{q}{\sqrt[3]{g}}[(u - u_0)h]^{3/2}$$

1/2

USSR

TAMARIN, A. I., TEPLITSKIY, YU. S. AND LIVSHITS, YU. YE., INZHENERNO-FIZICHESKIY ZHURNAL, Vol 31, No 2, Aug 76 pp 323-327

where g is the acceleration of free fall, h is the height above the screen, and q is a dimensionless coefficient that does not depend on h or $u - u_0$; u is the gas filtration rate. The value of q can be taken as 1.3 for bubbles in equipment with porous screens at distances of at least 200 mm from the gas distributor. References 11: 2 Russian, 9 Western.

2/2

USSR

UDC: 532.528

TERENT'YEV, A. G., Cheboksary

ON A NONLINEAR THEORY OF CAVITATING FLOW AROUND OBSTACLES

Moscow IZVESTIYA AKADEMII NAUK SSSR, MEKHANIKA ZHIDKOSTI I GAZA in Russian No 1, Jan/Feb 76 pp 158-161 manuscript received 11 Mar 75

[Abstract] Based on the example of steady-state cavitating flow of an infinite stream of ideal incompressible weightless fluid around a plate, the author shows the feasibility of single-valued construction of potential flow assuming only the physically justified conditions relative to the pressure in the cavity and liquid respectively

$$p = p_0 = \text{const}, \; p \geqslant p_0,$$

and the condition

$$\oint_L dz = 0,$$

showing that a continuous closed curve L can be found that encloses the cavity and the barrier. It is theoretically shown that steady-state

1/2

USSR

TERENT'YEV, A. G., IZVESTIYA AKADEMII NAUK SSSR, MEKHANIKA ZHIDKOSTI I GAZA, No 1, Jan/Feb 76 pp 158-161

potential cavitating flow is parted, whereas in reality only one-sheeted flow is possible. This contradiction may be eliminated in unsteady flow. The unsteady process at the end of the cavity is very complicated, and as yet cannot be mathematically treated. However, the departure from the steady state is local, and has no appreciable influence on the average hydrodynamic and geometric characteristics of flow close to the plate. The theory implies that a certain amount of liquid is periodically entrained by the cavity and returned to the main flow, which is borne out by cavitating flow in actual liquids. References 5: 3 Russian, 2 Western.

2/2

USSR UDC: 532.526

SHINKIN, G. P., Moscow

INTERACTION OF A LAMINAR MIXING ZONE WITH AN EXTERNAL FLOW

Moscow IZVESTIYA AKADEMII NAUK SSSR, MEKHANIKA ZHIDKOSTI I GAZA in Russian No 1, Jan/Feb 76 pp 147-150 manuscript received 12 Feb 75

[Abstract] Pressure-induced interaction of a laminar mixing zone with an external flow is considered in the hypersonic approximation. It is assumed that homogeneous flows of perfect gases are mixed, and that they have high Mach numbers ($M_\infty \gg 1$, $M_{-\infty} \gg 1$, the subscripts ∞ and $-\infty$ corresponding to the undisturbed parameters of the upper and lower flows respectively). The viscous mixing zone is treated separately from the inviscid shock layer. The boundary streamline is found from the condition of equality of the induced pressure on either side of the mixing zone. Analytical solutions are found in the asymptotic regions of weak and strong interaction for displacement thicknesses, boundary streamline and induced pressure in the local-similarity approximation. References 4: 3 Russian, 1 Western.

1/1

USSR UDC: 532.556.4

FRANKFURT, M. O.

INVESTIGATION OF THE EFFECTIVENESS OF A 'JET FLAP' DIFFUSER

Minsk INZHENERNO-FIZICHESKIY ZHURNAL in Russian Vol 31, No 2, Aug 76 pp 248-252 manuscript received 4 May 75

[Russian abstract provided by the source]

[Text] The paper gives the results of an experimental study of a diffuser device formed by a thin turbulent jet blown out of a tapered plug nozzle at the outlet of a cylindrical channel. The author defines the way that the energy characteristics of such a device depend on the momentum of the jet and the flow section of a nozzle with continuous and interrupted annulus as the flow escapes from the channel into free space. Interpolation formulas are proposed for approximate evaluation of the aerodynamic effectiveness of the given device, which can be used in installations with high-temperature flows or aggressive media. References 2: 1 Russian, 1 Western.

1/1

USSR UDC: 532.526.2.533.6.011

BELYANIN, N. M. and SHAL'MAN, YE. YU., Moscow

LAMINAR BOUNDARY LAYER IN A SWIRLING FLOW

Moscow IZVESTIYA AKADEMII NAUK SSSR, MEKHANIKA ZHIDKOSTI I GAZA in Russian No 1, Jan/Feb 76 pp 43-49 manuscript received 12 Jan 75

[Russian abstract provided by the source]

[Text] An investigation is made of a three-dimensional non-self-similar laminar boundary layer of compressible gas in a swirling flow. The boundary layer equations are written in variables that ensure constant coefficients of the highest derivatives, and are solved by a numerical finite-difference method. An examination is made of singularities of the boundary layer that arise when there is a retrograde-circulation region in the channel. References 10: 7 Russian, 3 Western.

1/1

USSR UDC 532.5:532.13

LEVITSKIY, S. P. and LISTROV, A. T., Voronezh

ON THE INFLUENCE THAT VISCOELASTIC PROPERTIES OF A LIQUID HAVE ON THE DYNAMICS OF SMALL OSCILLATIONS OF A GAS BUBBLE

Novosibirsk ZHURNAL PRIKLADNOY MEKHANIKI I TEKHNICHESKOY FIZIKI in Russian No 3(97) May/Jun 76 pp 82-87 manuscript received 18 Jun 75

[Abstract] A search of the literature reveals that many papers have been devoted to questions of the dynamics of gas bubbles in viscoelastic liquids. Several of them have made a numerical study of the radial oscillations of a gas bubble in an incompressible viscoelastic Oldroyd liquid. Others are concerned with an exact solution to the equation of small oscillations of a cavity in an Oldroyd medium with periodic change of pressure at infinity. Analysis of the oscillations of a bubble in a viscoelastic liquid is complicated by singularities of passage to the limit in the rheological equation of the medium which are of considerable interest for this problem. The authors discuss these features and on the basis of a numerical analysis of the precise solution they investigate the characteristics of small oscillations of a bubble in an

1/2

USSR

LEVITSKIY, S. P. and LISTROV, A. T., ZHURNAL PRIKLADNOY MEKHANIKI I TEKHNICHESKOY FIZIKI No 3(97), May/Jun 76 pp 82-87

Oldroyd medium. Linear analysis of the problem shows that oscillations of bubbles in viscoelastic liquids close to resonant frequencies should develop more intensively than in Newtonian liquids. Figures 7; references 11: 4 Russian, 7 Western.

2/2

USSR

UDC 532.593

OREL, V. R., Moscow

ON THE OSCILLATIONS OF AN IDEAL LIQUID ACTED ON BY THE FORCES OF SURFACE TENSION. THE CASE OF A DOUBLY CONNECTED FREE SURFACE

Novosibirsk ZHURNAL PRIKLADNOY MEKHANIKI I TEKHNICHESKOY FIZIKI in Russian No 3(97), May/Jun 76 pp 64-71 manuscript received 22 May 75

[Russian abstract provided by the source]

[Text] Any number of works have been devoted to problems of small oscillations of an ideal liquid with regard to the forces of surface tension. Several of these have examined the oscillations of a liquid with one free surface. Others have investigated the oscillations of an arbitrary number of immiscable liquids, which are separated by equilibrium surfaces, assuming that only zero oscillations are possible on each interface. In this article the author examines the problem of oscillations of an ideal liquid with two free surfaces, on each of which perturbations of a non-zero amount are kinematically allowable. The perturbations satisfy the condition of constancy of the total volume. A method of solution is proposed. As an example a problem of axisymmetrical

1/2

USSR

OREL, V. R., ZHURNAL PRIKLADNOY MEKHANIKI I TEKHNICHESKOY FIZIKI No 3(97) May/Jun 76 pp 64-71

oscillations of a liquid osculating sphere of the circular opening under conditions of weightlessness is considered. The first two normal frequencies and modes of the oscillations are found. Figures 4; references : 11 Russian.

2/2

USSR

UDC 533.95

SULTANOV, M. A., Tadzhik State University imeni V. I. Lenin

HYDRODYNAMIC PROCESSES IN THE CHANNEL OF A HIGH-POWER PULSE DISCHARGE

Leningrad ZHURNAL TEKHNICHESKOY FIZIKI in Russian Vol 46, No 7, Jul 76 pp 1432-1443 manuscript received 3 Jan 75

[Abstract] A study was made concerning the effect of anode-to-cathode streamers on the structural and the spectroscopic characteristics of a high-power pulse discharge, on its dynamics, and on the buildup of the plasma cloud. In the experimental part were used two conical electrodes 10 mm in diameter and 10 mm apart between tips, both of the same or each of a different material: copper, aluminum, iron, or nickel. The capacitance of the discharge circuit was 1200 μF, the charging voltage was 3.0 kV. A high-speed camera, an oscillograph, and a spectrograph were used for recording the space-time characteristics of such a discharge. The propagation of shock waves, the expansion and collapse of plasma filaments, the shifting of the shock-compressed plasma region, the temperature profiles, and the electron concentration profiles are analyzed on the basis of photographs and theory. Use is made of hydrodynamic and energy-

1/2

USSR

SULTANOV, M. A., ZHURNAL TEKHNICHESKOY FIZIKI Vol 46, No 7, Jul 76 pp 1432-1443

heating relations in calculating the plasma parameters. The discharge process is found to be periodic and attenuating within 3-4 half-periods. The structure of a discharge is found substantially different between two electrodes of the same material and between two electrodes of different materials, with the plasma found leaning toward the cathode in the latter case. Figures 6; references 34: 31 Russian, 3 Western.

2/2

USSR UDC: 621.3.038.8

BASHKIN, A. S., ORAYEVSKIY, A. N., TOMASHOV, V. N. and YURYSHEV, N. N., Physics Institute imeni P. N. Lebedev, Academy of Sciences USSR, Moscow

A CHEMICAL CO-LASER ON A MIXTURE OF $CS_2 + O_3$ WITH PHOTOINITIATION

Moscow KVANTOVAYA ELEKTRONIKA in Russian Vol 3, No 2(44), Feb 76 pp 362-368
manuscript received 5 Aug 75

[Russian abstract provided by the source]

[Text] A study is done on the feasibility of using ozone as the oxidant in a chemical CO-laser based on the reaction of oxidation of carbon disulfide. It is found that SF_6 is a more effective diluent than He or Ar. An energy density of 4.5 MJ/cc is achieved -- double the value attainable on a $CS_2 + O_2$ mixture under optimum conditions. References 19: 3 Russian, 16 Western.

1/1

USSR UDC: 621.373.826

IL'INSKIY, YU. A. and KHOKHLOV, R. V., Moscow State University

ON THE FEASIBILITY OF DEVELOPING A GAMMA LASER

Gor'kiy, IZVESTIYA VUZov, RADIOFIZIKA in Russian Vol 19, No 5-6, 1976
pp 792-800

[Abstract] A state-of-the-art survey on the feasibility of developing lasers that emit on wavelengths of 1 Å and shorter. It is shown that limitations due to the strong absorption of gamma radiation in matter can be overcome by using the Borrman effect. However, for effects of forced emission to become appreciable the resonant gain β would have to be of the order of 1 cm^{-1}. To achieve high gains with short-lived isomers would require an excessive number of nuclei on the upper level, although neutron pumping may be a possible approach to solution of this problem. The use of long-lived isomers with separation by conventional methods requires suppression of mechanisms leading to line broadening. These two approaches are examined in some detail, and ways of overcoming the inherent difficulties are considered. A third approach is discussed as a compromise in which isomers with intermediate lifetimes of 0.01 s up to a few dozen seconds are used. References 24: 20 Russian, 4 Western.
1/1

USSR

BABIN, A. A., BELYAYEVA, N. N., BELYAYEV, YU. N. and FREYDMAN, G. I., Gor'kiy Radiophysics Research Institute

ON PARAMETRIC GENERATION OF COHERENT EMISSION IN A SPATIALLY INCOHERENT PUMPING FIELD

Moscow ZHURNAL EKSPERIMENTAL'NOY I TEORETICHESKOY FIZIKI in Russian Vol 71, No 1(7), Jul 76 pp 97-110 manuscript received 4 Dec 75

[Russian abstract provided by the source]

[Text] An experimental study is done on parametric emission in a spatially incoherent pumping field (emission from a ruby laser in multimode operation). It is shown that when the ratio l_r/l_n of the lengths of the correlation between the resonant and nonresonant waves and the pumping wave is small, the incoherence of the pumping wave has little influence on the spectral and spatial characteristics of resonant wave emission. An investigation is made of the way that the self-excitation threshold and the conversion factor depend on the correlation length l_n and the transparency of the mirrors of the parametric light generator. Conversion of spatially incoherent pumping to frequency-tunable emission is achieved with a divergence close to the

1/2

USSR

BABIN, A. A., BELYAYEVA, N. N., BELYAYEV, YU. N. and FREYDMAN, G. I.,
ZHURNAL EKSPERIMENTAL'NOY I TEORETICHESKOY FIZIKI, Vol 71, No 1(7), Jul 76 pp 97-110

diffraction limit (which is approximately an order lower than the pumping divergence), and with a conversion factor close to that for coherent pumping (up to 20% with respect to the number of photons of the resonant wave, and up to 40% with respect to the photon flux). References 24: 15 Russian, 9 Western.

2/2

USSR UDC: 621.378.325

KULAGIN, YE. V., PIKHTELEV, A. I., TUTURKIN, YU. P., TIMOFEYEV, YU. V. and FATEYEV, B. P.

INVESTIGATION OF OPTICAL PUMPING AND AMPLITUDE CHARACTERISTICS OF THE Rb^{87} VAPOR LASER

Gor'kiy, IZVESTIYA VUZov, RADIOFIZIKA in Russian Vol 19, No 7, 1976 pp 993-1000 manuscript received 26 Aug 74

[Russian abstract provided by the source]

[Text] An investigation is made of optical pumping in a rubidium vapor laser. A technique for calculating rubidium laser characteristics is considered for general assumptions on the spectral makeup of the pumping light, the structure of the microwave field in the cavity and the re-emitted light. The results are in close agreement with experimental data. References 11: 10 Russian, 1 Western.

1/1

USSR UDC: 621.378.325

STROGANOV, V. I. and VERBOVSKIY, V. I., Institute of Physics of Semiconductors, Siberian Department, Academy of Sciences USSR, Novosibirsk

A RUBY LASER WITH VARIABLE EMISSION LOSSES

Leningrad ZHURNAL TEKHNICHESKOY FIZIKI in Russian Vol 46, No 8, Aug 76 pp 1690-1692 manuscript received 11 Jun 75

[Abstract] The paper describes ruby laser designs with variable transmission of the output mirror enabling extraction of part of the emission (variable emission losses). The principle of operation is based on using a half-wave quartz plate which is rotated in such a way that the resultant extraordinary ray can be coupled out of the optical cavity before reflection. It is shown how the output energy of the laser depends on the angle of rotation of the polarization plane (double the angle of rotation of the half-wave plate). The proposed design enables placement of MKP crystals inside the optical cavities of these lasers, increasing the coefficient of conversion to the second harmonic by a factor of 3-4 as compared with crystal placement outside the resonator. References 3 Russian.

1/1

USSR UDC: 621.378.25

KURINA, G. A., Voronezh Polytechnical Institute

ON THE SECOND APPROXIMATION OF THE AVERAGING METHOD IN ELECTRON MASER THEORY

Gor'kiy IZVESTIYA VUZov, RADIOFIZIKA in Russian Vol 19, No 7, 1976
pp 1054-1059 manuscript received 27 May 75

[Russian abstract provided by the source]

[Text] Nonlinear differential equations with a single fast phase that describe oscillations of electrons in masers are examined within the framework of the second approximation of the averaging method. The necessity of accounting for the nonresonance wave with any interaction length is demonstrated on the basis of an example of a cyclotron resonance maser with a Fabry-Perot resonator having its axis parallel to the static magnetic field. The second approximation of the averaging method is used to account for this wave. References 3 Russian.

1/1

USSR UDC: 621.378.25

KURIN, A. F., KURINA, G. A. and NOVIKOV, V. V., Voronezh State University

NONLINEAR THEORY OF A CYCLOTRON RESONANCE MASER WITH FABRY-PEROT RESONATOR

Gor'kiy IZVESTIYA VUZov, RADIOFIZIKA in Russian Vol 19, No 7, 1976
pp 1047-1053

[Russian abstract provided by the source]

[Text] A nonlinear analysis is made of the steady-state operation of a cyclotron resonance maser with Fabry-Perot resonator, the axis of the resonator coinciding with the direction of the static magnetic field. It is shown that there are four amplification branches. Optimum values of efficiency, cavity length and mismatch are calculated for a number of longitudinal and transverse electron velocities. References 7 Russian.

1/1

USSR UDC: 621.378.325

ALESHKEVICH, V. A., AKHMANOV, S. A., ZHDANOV, B. V., KOVRIGIN, A. I., KUZNETSOV, V. I. and SUKHORUKOV, A. P., Moscow State University imeni M. V. Lomonosov

INVESTIGATION OF THE FREQUENCY CHARACTERISTICS OF OPTICAL BREAKDOWN OF SOLID TRANSPARENT DIELECTRICS IN A NANOSECOND PULSE LASER FIELD

Leningrad ZHURNAL TEKHNICHESKOY FIZIKI in Russian Vol 46, No 8, Aug 76 pp 1693-1699 manuscript received 29 Oct 74

[Russian abstract provided by the source]

[Text] An investigation is made of the frequency dependence of true optical breakdown of fused and crystalline quartz and NaCl in the wavelength range of $\lambda = 0.26-1.06\mu m$. It is found that in the visible and infrared region, the threshold of true optical breakdown in these materials is weakly dependent on wavelength, evidencing the predominant role of avalanche ionization. With a transition to the ultraviolet band, a breakdown threshold reduction was observed in all investigated materials. In NaCl crystals this effect is attributed to a sharp increase of absorption in the ultraviolet by nonhomogeneities. This is confirmed by analysis of the morphology of fractures.
1/2

USSR

ALESHKEVICH, V. A., AKHMANOV, S. A., ZHDANOV, B. V., KOVRIGIN, A. I., KUZNETSOV, V. I. and SUKHORUKOV, A. P., ZHURNAL TEKHNICHESKOY FIZIKI, Vol 46, No 8, Aug 76 pp 1693-1699

The reduction of the breakdown threshold in quartz can be attributed to the contribution of many-photon ionization.

The paper gives considerable attention to procedural problems involved in the elimination of the influence of self-focusing and stimulated Mandelstam-Brillouin scattering on the results of breakdown studies. It is shown that strong prefocusing (lenses with $F = 1.5-2$ cm) is a reliable deterrent to self-focusing in the investigated materials for nanosecond pulses in the investigated wave band. It is pointed out that filamentary fractures are not necessarily the result of self-focusing. References 11: 5 Russian, 6 Western.

2/2

USSR UDC: 621.375.823.541.1

BASHKIN, A. S., GORSHUNOV, N. M., KUNIN, YU. A., NESHCHIMENKO, YU. P., ORAYEVSKIY, A. N., TOMASHOV, V. N. and YURYSHEV, N. N., Moscow Engineering Physics Institute

ACHIEVEMENT OF EMISSION IN A CS_2-O MIXTURE IN A SHOCK TUBE WITH HYPERSONIC NOZZLE

Moscow KVANTOVAYA ELEKTRONIKA in Russian Vol 3, No 2(44), Feb 76 pp 463-465
manuscript received 2 Sep 75

[Abstract] The paper gives the first results of experiments on generation of emission by CO molecules formed as a result of chemical reaction between CS_2 and O in a shock tube installation. A three-section shock tube with hypersonic nozzle was used. The optical cavity was formed by a spherical opaque gold-sputtered mirror and a flat dielectric mirror with 2% transmission. A mixture of oxygen and argon heated in the shock tube expanded in the hypersonic nozzle and was mixed in the ejector with CS_2. With an active cavity length of 7 cm, emission was achieved with 10 W of power in a 1.8 ms pulse. Research is now in progress on optimizing the cavity, mixture composition and shock tube regime. References 3 Western.

1/1

USSR UDC 537.523:621.378.8

BASHKIN, A. S., GRIGOR'YEV, P. G., ORAYEVSKIY, A. N., and SKVORTSOV, A. B., Physics Institute imeni P. N. Lebedev Academy of Sciences, USSR, Moscow

A POWERFUL SOURCE OF UV RADIATION ABOUT 1 μs IN DURATION FOR PUMPING OF GAS LASERS

Moscow KVANTOVAYA ELEKTRONIKA in Russian Vol 3, No 8, Aug 76 pp 1824-1826
manuscript received 15 Feb 76

[Abstract] The source of UV radiation suggested consists of a brass rod 1.8 cm in diameter, covered with a thin polyethylene tube. The rod is return current lead carrying a row of rings 0.4-0.6 cm wide with small projections on two sides. A sliding discharge is initiated by feeding a short pulse of voltage with an amplitude of up to 300 kV to one of the rings and the brass rod. Total discharge length is 93 cm. The discharge circuit is made so as to achieve the minimum inductance. With a stored energy of 50 kJ, a brightness temperature of over 50,000 K is achieved in the 240-340 nm spectral range, pulse duration about 1 μs. References 11: 8 Russian, 3 Western.

1/1

USSR UDC 621.373

VOLKOV, A. YU., DYEMIN, A. I., YEPIKHIN, V. N., and KUDRYAVTSEV, YE. M., Physics Institute imeni P. N. Lebedev Academy of Sciences USSR, Moscow

THE POSSIBILITY OF INCREASING THE EFFICIENCY OF GAS DYNAMIC LASERS: CARBON DISULFIDE GAS DYNAMIC LASERS

Moscow KVANTOVAYA ELEKTRONIKA in Russian Vol 3, No 8, 1976 pp 1833-1836
manuscript received 16 Jun 76

[Abstract] The authors note that there is an as-yet unused method of increasing the low efficiency of GDL: the use of working molecules and pumping molecules with low levels. This allows the production of the same population inversion as for molecules with high laser levels, but at low gas temperatures. The drop in the stagnation temperature for the GDL suggested in comparison with ordinary CO_2 GDL is of great significance for practice, since it reduces the demands placed on materials of nozzles and high pressure chambers and obviously simplifies the design of a closed cycle. Calculations for the CS_2 molecule show that inversion should occur for a number of transitions in the 11.4-117.0 μm range with CS_2 pumped by ordinary N_2 or CO molecules as well as

1/2

O_2 or CO_2. The maximum efficiency theoretically possible, considering relaxation losses, is 10%. The calculations are confirmed by experimental emission on the 00^0 1-10^0 0 transition with wavelength of 11.4 μm.
References 12: 2 Russian, 10 Western.

2/2

USSR UDC 539.196.5+621.373.8.029.71

KOLOMIYSKIY, YU. R., LETOKHOV, V. S., TUMANOV, O. A., Institute of Spectroscopy, Academy of Sciences USSR, Moscow

STUDY OF VIBRATIONAL EXCITATION OF THE COS MOLECULE AND STIMULATED EMISSION WITH PUMPING BY A CO_2 LASER PULSE

Moscow KVANTOVAYA ELEKTRONIKA in Russian Vol 3, No 8, Aug 75 pp 1771-1781
manuscript received 3 Feb 76

[Abstract] This work is dedicated to experimental investigation of processes of excitation, relaxation and stimulated emission on the example of one of the simplest molecules, the carbonyl sulfide molecule COS, when it is pumped by the radiation of a pulsed CO_2 laser. As a result of the studies performed on pumping of the harmonic of the COS molecule on the P(22) wavelength, it was established that the frequency of pumping radiation about 0.01 cm^{-1} off center relative to the transition $v = 0$, $J = 5 \rightarrow v_2 = 2$, $J = 4$ of the deformation mode of the COS molecule. The time of the vibration-vibration exchange in this mode $\tau_{vv}p = (1.3 \pm 0.25) \cdot 10^{-6}$ s·mm Hg, while the time of

1/2

USSR

KOLOMIYSKIY, YU. R., LETOKHOV, V. S., TUMANOV, O. A.,,KVANTOVAYA ELEKTRONIKA Vol 3, No 8, Aug 75 pp 1771-1781

rotational relaxation $\tau_r p = (2.9 \pm 0.6) \cdot 10^{-8}$ s·mm Hg. The powerful CO_2 laser pulse forms a population inversion between levels $v_2 = 2$ and $v_2 = 1$ of the deformation mode of oscillation, stimulating emission on this transition at a wavelength of $\lambda = 18.92$ μm. The absence of visible luminescence in the molecule at significant incident CO_2 laser energy densities indicates that the excitation mechanism of this rather simple molecule is different from the case of more complex molecules. References 16: 8 Russian, 8 Western.

2/2

USSR UDC: 621.378.325

ANAN'YEV, YU. A., TRUSOV, V. P. and SHERSTOBITOV, V. YE.

SELECTING AN UNSTABLE OPTICAL CAVITY FOR A GAS DYNAMIC LASER

Moscow KVANTOVAYA ELEKTRONIKA in Russian Vol 3, No 8(50), Aug 76 pp 1715-1720
manuscript received 4 Jan 76

[Abstract] Energy calculations are done for an unstable gas dynamic laser cavity comprised of two spherical mirrors with axis perpendicular to the gas flow (fig. 1). The analysis is based on the geometric approximation for the quasi-steady state, assuming that the mirrors are rectangular (the shape corresponding to maximum energy coupled out). The distributions of gain and field throughout the cavity are calculated by the method of iterations, and numerical results are given for a laser using a CO_2-N_2-H_2O mixture. The cavity is optimized by varying its magnification M and the lengths of the left and right sections l_1 and l_2 (see fig. 1). For each design, the resonator efficiency X is calculated, defined as the ratio of the number of quanta leaving the cavity in the form of useful emission to the total number of excited molecules entering the cavity in the same time period. It is found that the efficiency of energy conversion can be maximized by taking the total length of the cavity just short of the relaxation length of the medium, the

length of the left section about an order of magnitude shorter, and cavity losses such that the threshold value of the gain $(\log M - \log R)/L$ (where R is reflectance) is about half the value at input to the cavity. Although specific calculations show that the simplest unstable cavity with spherical mirrors can provide satisfactory energy conversion efficiency, the uniformity of field distribution over the mirrors is poorer than for the two-dimensional case (with cylindrical mirrors). It is shown that high conversion efficiency can be combined with uniform field distribution in prism cavities where the influence of wave aberrations of odd order is appreciably attenuated as compared with the ordinary telescopic cavity shown in fig. 1. A possible arrangement is shown in fig. 2. The cylindrical mirror of variable curvature *1* varies the magnification of the cavity, and the ratio between the overall length of the resonator and l_1 is varied by shifting plates *3* and *4* parallel to the gas flow, and by the inclination of the mirrors. References 6 Russian.

USSR

ANAN'YEV, YU. A., TRUSOV, V. P. and SHERSTOBITOV, V. YE., KVANTOVAYA ELEKTRONIKA, Vol 3, No 8(50), Aug 76 pp 1715-1720

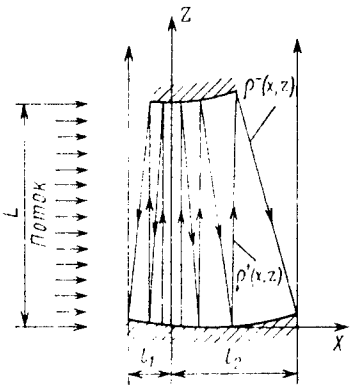

Fig 1

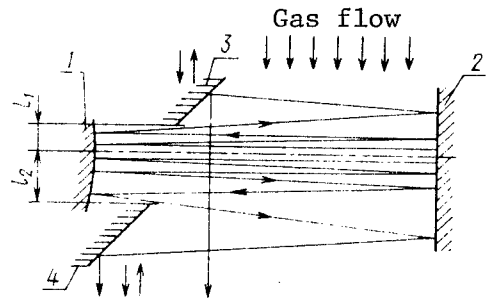

Fig 2

3/3

USSR UDC 621.378.825

ISAYEV, A. A., KAZARYAN, M. A., PETRASH, G. G., and CHEREZOV, V. M., Physics Institute imeni P. N. Lebedev, Academy of Sciences USSR, Moscow

STUDY OF A MANGANESE VAPOR PULSED LASER

Moscow KVANTOVAYA ELEKTRONIKA in Russian Vol 3, No 8, Aug 76, pp 1802-1805 manuscript received 10 Jul 75

[Abstract] A study is made of the emission characteristics of a pulsed manganese vapor laser. Discharge tubes were used with working portions of alundum 60-70 cm in length, internal diameter 1.5-2.0 cm. Quartz windows glued to the ends of the discharge tube at a slight angle to the axis and the electrodes were located outside the heated zone. The discharge tube was excited by the discharge of a capacitor through a TGI1-2500/50 hydrogen thyratron. The pulse repetition frequency varied between 2 and 21 kHz. The best emission parameters were achieved with helium as the buffer gas. The average emission power was 2.1 W, peak power 24 kW, efficiency 0.2%. The volumetric peak power was about 140 W/cm^3, volumetric emission pulse energy -- 2.5 μJ/cm^3. References 7: 5 Russian, 2 Western.

1/1

USSR UDC: 621.378.325

GRIDIN, V. A., KROTOV, V. A. and PETROVSKIY, A. N., Moscow Engineering Physics Institute

DESTRUCTION OF MKP CRYSTALS BY ULTRASHORT LASER PULSES

Moscow KVANTOVAYA ELEKTRONIKA in Russian Vol 3, No 2(44), Feb 76 pp 311-315
manuscript received 10 Jul 75

[Russian abstract provided by the source]

[Text] An investigation was made of the action of ultrashort laser pulses on nonlinear MKP crystals. It is shown that crystal destruction is discrete and independent of crystal orientation or the focal length of the lenses. The threshold energy of destruction increased with an increase in the focal length of the lenses. With a transition from $\lambda_1 = 1.06$ μm to $\lambda_2 = 0.53$ μm a reduction by a considerable factor was observed in the threshold energy of destruction. It is shown by the method of two-frame pulse holography that destruction increases in both directions away from the focal plane. The rate of increase in destruction counter to the laser pulse was estimated at $1.6 \cdot 10^{10}$ cm/s. Figures 5, references 7: 6 Russian, 1 Western.

1/1

USSR UDC: 621.3.038.8

ANDREYEV, S. I., BELOUSOVA, I. M., DASHUK, P. N., ZAROSOLOV, D. YU., ZOBOV, YE. A., KARLOV, N. V., KUZ'MIN, G. P., NIKIFOROV, S. M. and PROKHOROV, A. M., Physics Institute imeni P. N. Lebedev, Academy of Sciences USSR, Moscow

A PLASMA-SHEET CO_2 LASER

Moscow KVANTOVAYA ELEKTRONIKA in Russian Vol 3, No 8(50), Aug 76 pp 1721-1726
manuscript received 7 Jan 76

[Russian abstract provided by the source]

[Text] An experiment is done on using a plasma sheet as the cathode for cavity discharge in the working mixture of a CO_2 laser. The plasma sheet is formed by sliding discharge channels in the incomplete stage on a Mylar film surface. An energy input of about 1-2 J into the sliding discharge produced a homogeneous plasma surface measuring 6 x 40 cm, ensuring formation of a cavity discharge in a 3.5 cm gap with gas pressures from 0.5 to 1.5 atm in a gas mixture with component ratio $CO_2:N_2:He = 1:2:3$. Emission energy of 20 $J \cdot l^{-1} \cdot atm^{-1}$ was achieved at half-height in pulses of standard shape with energy input of 165 $J \cdot l^{-1} \cdot atm^{-1}$ to the cavity discharge. References 15: 12 Russian, 3 Western.

1/1

USSR UDC 621.373:535]:537.311.33

BYKOVSKIY, YU. A., MAKOVKIN, A. V., MOLOCHEV, V. I., SMIRNOV, V. L. and SHMAL'KO, A. V.

COUPLING THE RADIATION OF A SEMICONDUCTOR LASER INTO THIN-FILM AND FIBER-OPTICS WAVEGUIDES

Leningrad OPTIKA I SPEKTROSKOPIYA in Russian Vol 41, No 1, Jul 76 pp 143-145 manuscript received 9 Apr 75

[Abstract] The prospects of utilizing semiconductor lasers as small coherent light generators for integrated-optical circuits is causing research to be conducted for effective methods of coupling their radiation to thin-film waveguides. Possible ways of doing this by means of diffraction-lattice devices have been previously studied. The authors of this article suggest and demonstrate one new way to couple the radiation from a semiconductor laser to such waveguides on the basis of an optical tunneling effect.

A four-sided semiconductor laser in which all faces are mirrors of the optical cavity enables direct tunneling of the luminous energy from the active region of the laser into an optical waveguide, appreciably reducing the dimensions of the coupling device and simplifying manufacture. The emission of such a

1/2

laser is a set of closed ring modes that undergo total internal reflection on all four faces of the active region. The emission energy of the laser placed a distance of the order of fractions of a wavelength above the surface of a film is optically tunneled into the waveguide, the laser itself serving as the input device. The paper gives the results of experiments on coupling laser emission into thin-film and fiber-optics waveguides. The authors state that it is necessary to ensure a high degree of optical quality of the surfaces between which the tunneling of light energy takes place in order to achieve maximal effectiveness. Figure 1; references 5: 4 Russian, 1 Western.

2/2

USSR UDC 621.378.325

ISAYEV, A. A., KAZARYAN, M. A., LEMMERMAN, G. YU., PETRASH, G. G. and TROFIMOV, A. N., Physics Institute imeni P. N. Lebedev, Academy of Sciences, Moscow

PULSED EMISSION ON TRANSITIONS OF THE COPPER ATOM IN A DISCHARGE IN COPPER BROMIDE AND CHLORIDE VAPORS

Moscow KVANTOVAYA ELEKTRONIKA in Russian Vol 3, No 8, Aug 76 pp 1800-1802
manuscript received 10 Jul 75

[Abstract] The purpose of this work was to determine the peculiarities of laser generation using vapors of copper by injection of these atoms into a halide discharge. Studies with copper chloride were performed in an installation with a TGI1-2000/35 thyratron in quartz tubes 11 and 18 mm in diameter with a length of the heated portion of 40 and 90 cm. The copper bromide discharge was studied with a TGI1-2500/50 thyratron in tubes 30 mm in diameter and 50 cm in length. Emission was achieved with a pulse recurrence rate of up to 20 kHz. An investigation is made of the way that emission power depends on discharge conditions. The experiments indicated that

1/2

the emission characteristics of the copper bromide and chloride lasers were comparable to the characteristics achieved with copper vapor lasers.
References 13: 5 Russian, 8 Western.

2/2

USSR UDC: 532.6+538.6

VOTSISH, A. D., and KOLESNIKOV, YU. B., Institute of Physics, Academy of Sciences Latvian SSR

ON MOMENTUM TRANSFER FROM PULSATION MOTION TO AVERAGED MOTION IN MHD SHEAR FLOW

Moscow DOKLADY AKADEMII NAUK SSSR in Russian Vol 229, No 3, 21 Jul 76 pp 572-574 manuscript received 2 Mar 76

[Abstract] The paper gives the results of an experimental study of two-dimensional turbulence resulting from interaction between a magnetic field and a flow of electrically conductive fluid. It is shown that under certain conditions in flow with shear the energy of pulsation motion may be tapped off by the averaged flow. The experiments were done on a horizontal mercury loop in a nonconductive channel of 50 x 60 mm rectangular cross section placed in the gap of a DC electromagnet. Shear flow was produced by a flat gap 3 x 50 mm at the inlet to the working section with the long side parallel to the magnetic field. Measurements were taken at a fixed flowrate of 20 cm/s. It was found that the gradient of the averaged velocity and its maximum value are increased by application of a magnetic field to the flux, beginning at a distance of 360 mm from the initial section. This is

attributed to the two-dimensional structure of turbulence beyond this distance. This effect is accompanied by energy flux from small-scale to large-scale perturbations, up to and including energy transfer to the averaged flow. This is confirmed by turbulent stress measurements, which show that in the absence of a magnetic field the pulsation motion takes energy from the averaged motion, and when the magnetic field strength becomes sufficiently great the energy transfer of turbulent pulsations to the averaged flow appreciably exceeds the generation of energy by the averaged flow. References 11: 8 Russian, 3 Western.

USSR UDC: 533.9.07

DAUTOV, A. I., ISMAGILOV, R. KH., SHASHKOV, A. G. and SHAVALIYEV, KH. M., Kazan' Aviation Institute, Institute of Heat and Mass Exchange imeni A. V. Lykov, Academy of Sciences BSSR, Minsk

INVESTIGATION OF THE CHARACTERISTICS OF A PLASMOTRON WITH A CHANNEL OF VARIABLE RADIUS

Minsk INZHENERNO-FIZICHESKIY ZHURNAL in Russian Vol 31, No 2, Aug 76 pp 295-299 manuscript received 13 Nov 75

[Abstract] An experimental study is done on the thermal and electrical characteristics of a plasmotron with an arc chamber that becomes narrower in the direction of the gas flow, and the peculiarities of these characteristics are discussed. It is shown that heat flux, enthalpy, electric field strength and efficiency are appreciably dependent on the law of variation in the rate of flow of the plasma-forming gas lengthwise of the arc chamber, and that the profile of the arc chamber and law of variation in gas flow-rate can be optimized by improving the plasmotron characteristics. References 4 Russian.

1/1

USSR UDC: 621.313.12:538.4

DUBASOV, A. M., Institute of High Temperatures, Academy of Sciences USSR

CALCULATION OF THERMAL STRESSES IN CERAMIC ELEMENTS OF THE HEAT-RESISTING CHANNEL WALLS IN AN MHD GENERATOR

Moscow TEPLOFIZIKA VYSOKIKH TEMPERATUR in Russian Vol 14, No 4, Jul/Aug 76 pp 872-880 manuscript received 21 Jan 75

[Russian abstract provided by the source]

[Text] A technique is presented for calculating thermal stresses in a ceramic plate and cylinder of limited length. The temperature field varies only with respect to the thickness of the plate or the height of the cylinder. Heat stresses in the plate are calculated with consideration of the way that the elastic modulus depends on temperature and the stressed state. Thermal stresses in the cylinder are calculated for the case of a fixed modulus in the form of polynomials of r and z, where r is the radial coordinate and z is the axial coordinate. The solution satisfies equations of compatibility and equilibrium and the boundary conditions on one end exactly. Solutions on the remainder of the surface are found by the method of point-by-point satisfaction of boundary conditions. Examples are given of calculation for a plate and for cubiform and elongated cylinders. References 6 Russian.

1/1

USSR UDC: 621.313.12:538.4

BITYURIN, V. A., IVANOV, P. P., KOVBASTYUK, V. I. and KORYAGINA, G. M., Institute of High Temperatures, Academy of Sciences USSR

CONCERNING THE INFLUENCE OF VARIOUS LOSSES ON THE CHARACTERISTICS OF HIGH-POWER MHD GENERATORS

Moscow TEPLOFIZIKA VYSOKIKH TEMPERATUR in Russian Vol 14, No 4, Jul/Aug 76 pp 846-852 manuscript received 28 May 75

[Russian abstract provided by the source]

[Text] A discussion of the flow peculiarities of MHD generators for first generation open-cycle MHD electric power plants: boundary layer development, conduction nonhomogeneity in the channel cross section, Hall effect in a flow with nonhomogeneous conduction, end effect, etc. It is shown that nonhomogeneity of conduction appreciably increases the necessary channel length without much effect on conversion efficiency. Inattention to this circumstance in the simplified techniques for MHD generator calculations used in the literature on technical and economic estimates of MHD electric power plants may result in considerable inaccuracy in determination of the competitiveness of MHD generators as compared with other kinds of power

plants. It is concluded that the flow regime must be carefully optimized in order to achieve acceptable characteristics of MHD electric power plants. References 9 Russian.

USSR UDC: 621.313.12:538.4

BOBKOV, A. A., KOVALEV, V. N. and LARIONOV, YU. A., Moscow Power Engineering Institute

ON TESTING A HALL MHD GENERATOR

Moscow TEPLOFIZIKA VYSOKIKH TEMPERATUR in Russian Vol 14, No 4, Jul/Aug 76 p 916 manuscript received 2 Nov 75

[Annotation of an article deposited in VINITI, 1 Jul 76 No 2486 Dep.]

[Text] The paper gives the results of an experimental study of the thermal and electrical characteristics of a subsonic MHD Hall generator (distribution of temperature, pressure, velocity and specific heat stresses through the walls of the electrodes, and Hall potential lengthwise of the channel).

The first test series on the annular Hall generator was done outside the magnet with external applied voltage to evaluate the equivalent internal resistance of the generator and the electrical resistance of the insulation, and to work out the design of the channel.

A second series of experiments was done in the magnetic field to determine the electrical characteristics of the Hall generator (effective Hall parameter, current-voltage characteristics of the generator).

1/2

USSR

BOBKOV, A. A., KOVALEV, V. N. and LARIONOV, YU. A., TEPLOFIZIKA VYSOKIKH TEMPERATUR, Vol 14, No 4, Jul/Aug 76 p 916

Conclusions are drawn from the experimental data on the workability of the channel design, and on the influence that additive deposits on the cold walls of the channel have on the stability of the electrical characteristics of the Hall generator. The theoretical and experimental current-voltage characteristics of the generator are compared for different values of the potential drop near the electrodes.

2/2

USSR UDC: 621.387.143:621.793

GONCHAR, N. I., ZVYAGINTSEV, A. V., MITIN, R. V. and PRYADKIN, K. K., Physico-technical Institute, Academy of Sciences UkrSSR, Khar'kov

USING AN ELECTRODELESS CAPACITIVE RF PLASMOTRON TO APPLY REFRACTORY DIELECTRIC COATINGS

Moscow TEPLOFIZIKA VYSOKIKH TEMPERATUR in Russian Vol 14, No 4, Jul/Aug 76 pp 853-856 manuscript received 10 Mar 75

[Russian abstract provided by the source]

[Text] An investigation is made of the feasibility of using an rf plasmotron with capacitive discharge to apply refractory dielectric coatings to metallic and nonmetallic surfaces. A discharge chamber is designed for effective utilization of a filamentary capacitive discharge configuration. A qualitative analysis is made of commercial alumina coatings applied to metal backings. References 6: 5 Russian, 1 Western.

1/1

USSR UDC 621.378.33

GAVRIKOV, V. F., DRONOV, A. P., ORLOV, V. K. and PISKUNOV, A.K,

THE INTERACTION OF VIBRATIONALLY EXCITED DIATOMIC MOLECULES WITH TRIATOMIC MOLECULES

Moscow KVANTOVAYA ELEKTRONIKA in Russian Vol 3, No 8, Aug 76 pp 1733-1742
manuscript received 16 Jan 76

[Russian abstract provided by the source]

[Text] A study is made of the vibrational interaction of diatomic molecules with combination levels of triatomic molecules. The analysis considers V-V and V-T process as well as intramolecular exchange. Simple expressions are produced relating the vibrational temperature of the ν_3 mode of the triatomic molecule to the vibrational temperature of the diatomic molecule under quasi-equilibrium conditions. It is shown that under certain conditions, the ν_3 mode may be heated by energy stored in oscillations of the diatomic molecule. Estimates of this effect are produced for the systems HF-CO_2, DF-CO_2, D_2-CO_2 and CO-CS_2. Experimental measurements are presented of the gain in a supersonic D_2-CO_2 stream on the 00^0 1-10^00 transition. The measured gain confirms
1/2

USSR

GAVRIKOV, V. F., DRONOV, A. P., ORLOV, V. K. and PISKUNOV, A. K., KVANTOVAYA ELEKTRONIKA Vol 3, No 8, Aug 76 pp 1733-1742

that in the system D_2-CO_2, heating of the ν_3 mode of CO_2 occurs due to the energy stored in the D_2 vibrations. References 29: 6 Russian, 23 Western.

2/2

USSR UDC: 621.378

ARMBATSUMYAN, R. V.

SEPARATION OF ISOTOPES BY THE METHOD OF DISSOCIATION OF POLYATOMIC MOLECULES IN A STRONG INFRARED FIELD

Moscow KVANTOVAYA ELEKTRONIKA in Russian Vol 3, No 8, Aug 76 pp 1845-1846

[Summary of a paper delivered at an expeditionary session of the Council of the Soviet Academy of Sciences on the Problem of Coherent and Nonlinear Optics held 15-17 January 1976 at Tsakhkadzor near Yerevan]

[Abstract] An investigation is made of processes of rapid dissociation of SF_6 molecules in a strong infrared field. An analysis is made of the way that dissociation rate and isotopic selectivity depend on initial gas pressure and the IR frequency. It is shown that the dissociation rate is determined by vibrational-vibrational exchange during the IR pulse. The behavior of selectivity with pressure is also determined chiefly by this mechanism. The upper limit of dissociation selectivity is fixed at 13 by the imperfection of the chemical cycle of separation. The lower limit of dissociation of SF_6 was found to be 23 MW/cm^2. The author has developed a theory of overcoming anharmonicity of oscillations by an appropriately chosen

sequence of transitions: first the molecule goes through a P-transition ($v = 0 \rightarrow v = 1$), then a Q-transition ($v = 1 \rightarrow v = 2$) and an R-transition ($v = 2 \rightarrow v = 3$), and then goes up to the limit of dissociation through a quasi-continuum of vibrational levels of molecules. It is suggested that the mechanism responsible for selective processes is dissociation in a two-frequency IR field -- ν_1 in resonance with the vibrational transition is the weaker component that excites the first few levels of the molecules, and ν_2 off-resonance from the absorption frequency is responsible for dissociation of the pre-excited molecules. The dispersion characteristic of the quasi-continuum is plotted, and it is shown that the rate of dissociation in SF_6 with frequency detuning by 130 cm^{-1} from the ν_3 band is 40 times below the rate when detuning is only 20 cm^{-1}, where the dissociation rate is about 1.2-1.3 times lower than for high-Q single-frequency exposure. The author feels that the results confirm the proposed theory of anharmonicity compensation.

USSR UDC: 535.341

BIRYUKOV, A. S., VOLKOV, A. YU., KUDRYAVTSEV, YE. M. and SERIKOV, R. I., Physics Institute imeni P. N. Lebedev, Academy of Sciences USSR, Moscow

ANALYSIS OF DATA ON THE PROBABILITIES OF SPONTANEOUS EMISSION AND ON THE CROSS SECTIONS OF COLLISIONAL BROADENING OF LINES OF THE 00^01-10^00 TRANSITION OF THE CO_2 MOLECULE

Moscow KVANTOVAYA ELEKTRONIKA in Russian Vol 3, No 8, Aug 76 pp 1748-1754
manuscript received 27 Jan 76

[Russian abstract provided by the source]

[Text] A critical analysis is made of a number of experimental papers on measurement of Einstein's coefficient A_{mn} and the cross sections of collisional broadening of line $P(20)$ of the 00^01-10^00 transition in the CO_2 molecule. As a result, a value of $A_{mn} = 0.187\ s^{-1}$ is recommended for the line $P(20)$, while values of 7.58, 5.56 and 4.86 MHz/mm Hg are recommended as quantities defining broadening of lines at 300 K due to collisions between CO_2 molecules and CO_2, N_2 and He respectively. References 23: 8 Russian, 15 Western.

1/1

USSR UDC: 543.46+621.378

HORA, H., New South Wales University, Kensington, Australia

INCREASED NUCLEAR ENERGY YIELDS FROM THE FAST IMPLOSION OF COLD SHELLS DRIVEN BY NONLINEAR LASER PLASMA INTERACTIONS

Moscow KVANTOVAYA ELEKTRONIKA in Russian Vol 3, No 2(44), Feb 76 pp 293-303
manuscript received 19 Jun 75

[Russian translation by B. F. Polkovnikov of a paper delivered at the Seventh All-Union Conference on Coherent and Nonlinear Optics, Tashkent, May, 1974; English abstract provided by the source]

[Text] The nonlinear interaction force between laser fields and cold plasma shells efficiently transforms radiant energy into mechanical energy of implosion. This transfer of energy has been considered before in numerical experiments and is treated here analytically in a didactic example starting with the inhomogeneous Rayleigh density profile. Up to 50% of the laser energy could be transferred into the energy of compression if a single, untailored pulse of $2.5 \cdot 10^{16}$ W/cm^2 intensity and of only a few picoseconds duration is used for spherical illumination of the shell. If the pulse is short enough to reduce collisional thermalization, then the collapse and

1/2

compression of the plasma can remain both at the threshold of Fermi degeneracy and adiabatic. This results in nuclear reaction gains G, based on the deposited energy E_0, and without α-particle reheating, of $G = 400$ for E_0 = 2.25 kJ (DT), 900 kJ (DD), 13 MJ (HB). About 1000 times less laser energy is necessary than in the case of gasdynamic ablation resulting in the same nuclear reaction yields. References 21: 2 Russian, 19 Western.

2/2

USSR

AFANAS'YEV, YU. V., BASOV, N. G., VOLOSEVICH, P. P., GAMALIY, YE. G., KROKHIN, O. N., KURDYUMOV, S. P., LEVANOV, YE. I., ROZANOV, V. B., SAMARSKIY, A. A. and TIKHONOV, A. N., Physics Institute imeni P. N. Lebedev, Academy of Sciences USSR

EXTREME PHYSICAL CONDITIONS IN THE PROCESS OF LASER-INITIATED THERMONUCLEAR COMBUSTION

Moscow PIS'MA V ZHURNAL EKSPERIMENTAL'NOY I TEORETICHESKOY FIZIKI in Russian Vol 24, No 1, 5 Jul 76 pp 23-25 manuscript received 5 May 76

[Abstract] The authors analyze the physical conditions that arise in the plasma of thermonuclear targets in laser-driven fusion on the thermonuclear combustion stage. Assuming laser emission energy of the order of 10^6 J and a target with deuterium-tritium fuel content of 10^{-3} g, the following values are estimated for the characteristic parameters of the thermonuclear plasma in the combustion process: pressure 10^{14} atmospheres, combustion time $2 \cdot 10^{-11}$ s, average ion temperature 0.6 MeV, and time of energy transfer from α-particles and neutrons to ions 10^{-11} s. It is shown that there should be a group of hot ions with temperature of the order of 1 MeV or more about equal in number to the neutron production (14 MeV) of 10^{19}. The characteristic

neutron density is 10^{24} cm^{-3}, and the neutron flux is of the order of 10^{30} s^{-1}. Thus neutron-neutron scattering is possible with the production of 28 MeV neutrons. The parameters found in this numerical experiment would be useful in a variety of experiments, and could be registered by analysis of ion, neutron and x-ray spectra. References 2 Russian.

USSR UDC 681.142.2:539.12

LOKTIONOV, A. A., KHOMENKO, K. I.

USE OF MAPPING SYSTEMS TO REPRESENT AND STATISTICALLY ANALYZE MEASUREMENTS FROM BUBBLE CHAMBER PHOTOGRAPHS

Alma-Ata ISVESTIYA AKADEMII NAUK KAZAKHSKOY SSR SERIYA FIZIKO-MATEMATICHESKAYA in Russian No. 4, 1976 pp 12-16 manuscript received 14 Jan 76

[Abstract] In the Laboratory of Mathematical Physics of the Institute of High Energy Physics, Acad. Sci. KazSSR, in the analysis of bubble chamber measurements a mapping system is used with processing of the data by the method of least squares on a BESM-4 computer. The structure of the system utilizes the standard BESM-4 hardware and specialized software. A flow chart of the software is presented. The system has been used for methodological work related to debugging of measurements and geometric reconstruction utilizing the Mirabel' new generation bubble chamber. The effects of a large number of various factors defining the motion of the particle in the hydrogen bubble chamber results in a complex form of the particle trajectory on stereo projections in the plane of the film. In order to produce a high quality representation, the track is described on

1/2

USSR

KOKTIONOV, A. A., KHOMENKO, K. I., ISVESTIYA AKADEMII NAUK KAZAKHSKOY SSR SERIYA FIZIKO-MATEMATICHESKAYA No. 4, 1976 pp 12-16

the plane of the film by an m-power polynomial. As this curve approaches the "true" trajectory, the mean-square deviation S of the polynomial from the measurements decreases (approaching a certain limit). The statistical analysis of the results of measurements gives an idea of the nature of the trajectory of the particles in the stereo projection in the plane of the film. References: 5 Russian.

2/2

USSR UDC: 539.107:621.384.6

ANASHIN, V. V., BUDKER, G. I., BULUSHEV, A. F., DIKANSKIY, N. S., KOROLEV, YU. A. (deceased), KOT, I. KH., KUDELAYNEN, V. I., KUSHNIR, V. I., LIVSHITS, A. A., MESHKOV, I. N., MIRONENKO, L. A., PARKHOMCHUK, V. V., SKRINSKIY, A. N., SMIRNOV, B. M., SUKHINA, B. N. and USOV, A. P., Institute of Nuclear Physics, Siberian Department, Academy of Sciences USSR, Novosibirsk

THE NAP-M PROTON ACCUMULATOR. I. THE MAGNETIC AND VACUUM SYSTEM

Moscow PRIBORY I TEKHNIKA EKSPERIMENTA in Russian No 4, Jul/Aug 76 pp 31-34
manuscript received 17 Jul 75

[Russian abstract provided by the source]

[Text] The paper describes the magnetic and vacuum system of a proton accumulator designed for experiments on electron cooling [see G. I. Budker, Atomnaya energiya, 1967, Vol 22, p 346; V. V. Anashin et al., Doklad na IV Vsesoyuznom soveshchanii po uskoritelyam zaryazhennykh chastits (Report to the Fourth All-Union Conference on Charged Particle Accelerators), 1975, Vol 2, p 304, "Nauka"]. The arrangement of the accumulator -- magnets with homogeneous field and edge focusing, and long straight intermediate gaps -- is determined by the specific nature of electron cooling. The vacuum chamber

is exhausted by magnetic discharge and sorption pumps, and can be heated to 300°C. The working vacuum is $2 \cdot 10^{-10}$ mm Hg. References 5 Russian.

USSR UDC: 539.107:62-531.6

BAKLAKOV, B. A., BOROVIKOV, V. M., PEREMEYENKO, V. F., KARLINER, M. M. and PETROV, S. P., Institute of Nuclear Physics, Siberian Department, Academy of Sciences USSR, Novosibirsk

THE NAP-M PROTON ACCUMULATOR. II. CURRENT STABILIZATION IN THE SUPPLY CIRCUITS FOR THE MAGNETS OF THE CONTROLLING FIELD AND THE CORRECTING ELEMENTS

Moscow PRIBORY I TEKHNIKA EKSPERIMENTA in Russian No 4, Jul/Aug 76 pp 34-36
manuscript received 17 Jul 75

[Russian abstract provided by the source]

[Text] A description of the systems for stabilizing currents in the windings of the magnets for the controlling field and 24 correcting elements. Current instability in the windings of the magnets for the controlling field does not exceed $1 \cdot 10^{-4}$; the relative magnitude of pulsations is no greater than $2 \cdot 10^{-5}$ at currents up to 7.5 kA. The current instability of the correcting elements for each of the 24 channels is less than $1 \cdot 10^{-3}$ for correction currents up to 30 A. References 3 Russian.

1/1

USSR UDC: 621.3.032.266

BATASHEV, A. P., RYBALOV, S. V., and SAPOZHNIKOV, G. I.

A RECUPERATOR WITH INTENSIVE ELECTRON-BEAM DECELERATION

Moscow PRIBORY I TEKHNIKA EKSPERIMENTA in Russian No 4, Jul/Aug 76 pp 53-55
manuscript received 22 Sep 75

[Abstract] A recuperator is proposed in which beam deceleration involves flattening of the cylindrical electron beam followed by deceleration in a hollow slotted collector. A quadrupole lens is used for transformation of beam shape. The authors investigate a consequent-pole lens of circular cross section in which the conductors are spaced around the periphery with density varying as $\cos 2\varphi$. It is shown that a lens current of 0.5 A flattens the beam to $h/l = 0.05$. Experiments show that beam transformation increases percentage recuperation to 99% as compared with 95% without the lens. References 6 Russian.

1/1

USSR UDC: 539.107:621.384.6

PEREMEYENKO, V. F., DIKANSKIY, N. S., KALININ, A. S., KARLINER, M. M., LAZARENKO, B. A., LITVINOV, A. A., MEDVEDKO, A. S., OSTANIN, V. P., PARKHOMCHUK, V. V., SUKHINA, B. N. and CHEREPANOV, V. P., Institute of Nuclear Physics, Siberian Department, Academy of Sciences USSR, Novosibirsk

THE NAP-M PROTON ACCUMULATOR. III. THE ACCELERATING SYSTEM. MONITORING BEAM PARAMETERS

Moscow PRIBORY I TEKHNIKA EKSPERIMENTA in Russian No 4, Jul/Aug 76 pp 37-40
manuscript received 17 Jul 75

[Russian abstract provided by the source]

[Text] The frequency in the NAP-M accelerating system is tuned with respect to a Hall pickup signal proportional to the magnetic field. Precision frequency tuning is done with respect to the radial and phase coordinates of the beam. Monitoring of beam parameters consists in measurement of the position of the equilibrium orbit and beam current. The beam current is measured at particle injection, during acceleration, and also during an experiment where beam bunching is absent. The systems use electrostatic pickups, Rogowski loops and a magnetic-modulation current sensor. References 6 Russian.
1/1

USSR UDC: 539.107:681.142

BOLVANOV, YU. A., KONONOV, V. I., KUPER, E. A., LEDENEV, A. V., NIFONTOV, V. I., ORESHKOV, A. D., OSHCHEPKOV, YU. I., PESTRIKOV, D. V., PISKUNOV, G. S., SAZANSKIY, V. YA. and SUKHINA, B. N., Institute of Nuclear Physics, Siberian Department, Academy of Sciences USSR, Novosibirsk

THE NAP-M PROTON ACCUMULATOR. IV. ACCUMULATOR CONTROL SYSTEM

Moscow PRIBORY I TEKHNIKA EKSPERIMENTA in Russian No 4, Jul/Aug 76 pp 40-43
manuscript received 17 Jul 76

[Russian abstract provided by the source]

[Text] The basis of the NAP-M accumulator control system is the ODRA-1325 digital computer. The paper describes the equipment for data transmission, the analog-code and code-analog conversion equipment, and the control program that organizes interaction between the computer and external devices. References 6 Russian.

1/1

USSR UDC 539.12.01

SHEKHTER, V. M., Leningrad Institute of Nuclear Physics imeni B. P. Konstantinov, Academy of Sciences USSR

WEAK INTERACTION WITH NEUTRAL CURRENTS

Moscow USPEKHI FIZICHESKIKH NAUK in Russian Vol 119, No 4, 1976 pp 593-632

[Abstract] Neutral currents were experimentally observed but recently--in late 1973. Their discovery led to a redefinition of the weak interaction; in particular, it has been found to be not universal: its constants differ for different particles. Neutral currents are also important for an understanding of astrophysical phenomena. The study of the weak interaction with neutral currents is essentially just beginning. This review provides a systematic presentation of experimental results up to mid 1975 and their theoretical implications. The analysis is limited to processes involving neutrinos, doubtless related to the weak interaction. Many experiments are also presented allowing in principle detection of the effects of nonconservation of parity. Results to date indicate clearly that when muon neutrinos interact with nucleons and electrons, processes occur which do not involve emission of muons and therefore result from the weak interaction with neutral currents. Neutrino

and antineutrino spectra are presented from experiments at Argonne, the CERN group, at Serpukhov, the HPW group and Caltech-Fermilab. Two versions of the calibration theory of weak interaction are discussed which correspond to the Weinberg-Salam model and the so-called vector model. Both versions agree with experiment when free parameters of the Weinberg angle type are appropriately selected. References 112: 14 Russian, 98 Western.

USSR UDC 539.12.01

KOLTOCHNIK, S. N., and KUCHIN, I. A.

CALCULATION OF THE CONTRIBUTION OF DOUBLE DIFFRACTION PRODUCTION AND CHECKING OF FACTORIZATION OF CROSS SECTIONS OF DIFFRACTION PROCESSES OF pp SCATTERING

Alma-Ata IZVESTIYA AKADEMII NAUK KAZAKHSKOY SSR SERIYA FIZIKO-MATEMATICHESKAYA in Russian No 4, 1976 pp 34-39 manuscript received 23 Mar 76

[Russian abstract provided by the source]

[Text] A model of simultaneous exchange, parametrized with respect to data on reactions of elastic scattering of protons and diffraction excitation of nucleon isobars in pp collisions is used to calculate the cross section σ_{pp}^{DD} of double diffraction production in the momentum range from 5 to 300 GeV/c. The results of the calculations are compared with available experimental data. It is shown that the assumption of factorization of cross sections of elastic scattering and diffraction production is not confirmed by calculation: the factorization relationship is some 2.5 times greater than the value of σ_{pp}^{DD}. References 13: 5 Russian, 8 Western.
1/1

USSR UDC 621.384.6

KAZACHA, V. I. and KOZHUKHOV, I. V.

USE OF RADIAL LINES IN PULSE-TYPE ACCELERATORS

Leningrad ZHURNAL TEKHNICHESKOY FIZIKI in Russian Vol 21, No 7, Jul 76 pp 1477-1483 manuscript received 11 Mar 75

[Abstract] High-energy electron beams (10-15 MeV) can be generated in multigap rather than in more costly and difficult to design single-gap accelerators. A system of twin radial lines for a multigap accelerator had been proposed earlier. Here the transient characteristic of such a line is calculated, for the ultimate purpose of optimizing its design in terms of maximum pulse amplitude with minimum pulse distortion over a period of several tens of nanoseconds. The fundamental transmission-line equations are first solved for the general case of simple electrodes in the form of parallel disks or coaxial cylinders. Each twin line in the proposed radial system consists of one line shorted at the center and one not. The transient characteristic here depends on the degree of asymmetry. Calculations and E-wave measurements have shown that the performance in this case may be improved by having the characteristic impedance of the shorted line vary more appreciably with the radius than its unshorted counterpart. Figures 5; references 8: 3 Russian, 5 Western.
1/1

USSR UDC 539.123

PONTEKORVO, B. M., Joint Institute for Nuclear Research, Dubna

INSTALLATIONS FOR THE INVESTIGATION OF FREE NEUTRINOS

Moscow USPEKHI FIZICHESKIKH NAUK in Russian Vol. 119 No. 4, 1976 pp 633-639

[Abstract] Several tables are presented which the author prepared for lectures on neutrinophysics in order to give an impression of the scale and achievements of this section of physics. The tables list existing installations for the investigation of free neutrinos. They include the overwhelming majority of installations for which funds have been allocated. The four tables list: 1) installations for the investigation of artificial "low" energy neutrinos; 2) installations for the investigation of artificial high energy neutrinos; 3) installations for the investigation of cosmic "low" energy neutrinos; and 4) installations for the investigation of cosmic high energy neutrinos. References 33: 1 Russian, 15 Hungarian, 17 Western.

1/1

USSR

ALESHIN, V. I., BALYSH, A. YA., GALITSKIY, V. M., KOZLOV, YU. V., LEBEDEV, V. I., MARTEM'YANOV, V. P., MIKAELYAN, L. A., POMANSKIY, A. A. and TARASENKOV, V. G., Institute of Atomic Energy imeni I. V. Kurchatov

ON SPONTANEOUS TRANSITIONS OF NUCLEI TO THE SUPERDENSE STATE

Moscow PIS'MA V ZHURNAL EKSPERIMENTAL'NOY I TEORETICHESKOY FIZIKI in Russian Vol 24, No 2, 20 Jul 76 pp 114-117 manuscript received 18 Jun 76

[Abstract] A search was made for spontaneous transitions of nuclei to the superdense state. Two scintillation counters were used at a depth of 600 m in the neutrino station of the Soviet Academy of Sciences. One counter contained sodium iodide, and the other contained hexafluorobenzene. Tungsten shielding and an anticoincidence system were used to cut down the external background. Gamma quanta were registered in the 3-10 MeV range. No effects associated with transition to the superdense state were observed. An estimate is made of limitations on the parameters of the superdense state. References 3: 2 Russian, 1 Western.

1/1

USSR

BELENOV, E. M., DANILEYKO, M. V., KOZUBOVSKIY, V. R., NEDAVNIY, A. P. and SHPAK, M. T., Institute of Physics, Academy of Sciences UkrSSR

ULTRAHIGH-RESOLUTION SPECTROSCOPY BASED ON RING LASER WAVE COMPETITION

Moscow ZHURNAL EKSPERIMENTAL'NOY I TEORETICHESKOY FIZIKI in Russian Vol 71, No 1(7), Jul 76 pp 78-87 manuscript received 8 Sep 75

[Russian abstract provided by the source]

[Text] A new method is proposed for nonlinear laser spectroscopy without direct use of Lamb shifts. The physical basis of the technique is in the competition of effects of spectral and spatial burnouts of the gas line, and the phase interaction between traveling waves in a ring laser. The procedure was applied to investigation of the hyperfine structure of the absorption line of excited neon on the transition $4p'[3/2]_2 \rightarrow 5s'[1/2]_1$ due to the presence of isotopes in the absorbing medium. The ring laser is shown to have the following advantages over a linear laser: it has much higher sensitivity and simpler registration (up until now research of this kind has not been done at all on a linear laser). A ring laser was used for precision measurement of Zeeman splitting of the methane absorption line belonging to

the $F_1^{/2/}$ component of branch $P(7)$ of group ν_3 with resolution of $2 \cdot 10^{-6}$ cm^{-1}. The authors demonstrate the feasibility of improving sensitivity and accuracy of the nonlinear spectroscope based on a ring laser for studying the hyperfine structure of weakly absorbing gases by using self-oscillatory emission modes. References 22: 13 Russian, 9 Western.

USSR UDC: 621.375.8

KIRSANOV, V. P., TROSHKIN, S. V. and BYKOV, I. V.

INFLUENCE OF AN ILLUMINATOR HOUSING ON THE ELECTRICAL AND LOAD CHARACTERISTICS OF FLASH LAMPS

Moscow KVANTOVAYA ELEKTRONIKA in Russian Vol 3, No 2(44), Feb 76 pp 431-433
manuscript received 25 Feb 75

[[Abstract] An investigation was made of the electrical and load characteristics of IFP-8000 flash lamps operating in free space and in three types of illuminators: a closed metal cylinder filled with magnesium oxide powder in a layer about 1 cm thick; a less restrictive quartz tube covered on the outside with a similar magnesium oxide layer; a four-lamp illuminator with ceramic reflector having part of the space filled with a neodymium glass plate 1.5 cm thick. It was found that lamps with a reflective coating on the envelope and those located in the center of the multiple-lamp illuminator have maximum energy reduced by about 1.5 times as compared with the open lamp; the corresponding energy reduction is about 20% when the diameter of the reflector is doubled. The electrical conductivity of the gas discharge plasma increases by 30% in illuminators, and the discharge temperature increases by 15%. A reduction in service life by a factor of about 30 can be expected if they are enclosed in illuminators. References 10: 8 Russ., 1 West.
1/1

USSR UDC: 537.312.62

MENDE, F. F., UVAROV, I. I., TYSHLYAR, V. I. and TRUBITSYN, A. V., Physico-technical Institute, Academy of Sciences UkrSSR, Khar'kov

ON CALCULATING THE SURFACE RESISTANCE OF SUPERCONDUCTORS

Leningrad ZHURNAL TEKHNICHESKOY FIZIKI in Russian Vol 46, No 8, Aug 76 pp 1638-1643 manuscript received 24 Jan 74

[Abstract] Expressions convenient for practical use are derived for calculating the surface resistance of superconductors of the first and second kind. The analysis is based on certain implications of BCS theory. Calculations are compared with exact results of the Mattis-Bardeen and Abrikosov-Gor'kov-Khalatnikov microscopic theories. The comparison shows good agreement with the microscopic theory for the proposed temperature and frequency dependences of surface resistance. The proposed analytical formulas also show good agreement with experimental data. References 12: 10 Russian, 2 Western.

1/1

USSR

LIPATOV, L. N., Institute of Nuclear Physics imeni B. P. Konstantinov Academy of Sciences USSR

CALCULATION OF THE GELL-MANN-LOW FUNCTION IN SCALAR THEORY WITH A STRONG NONLINEARITY

Moscow PIS'MA V ZHURNAL EKSPERIMENTAL'NOY I TEORETICHESKOY FIZIKI in Russian Vol 24, No 3, Aug 76 pp 179-183 manuscript received 31 May 76

[Abstract] The Gell-Mann-Low function is calculated for the class of scalar models in the quantum field theory which are described by the Lagrangian

$$L = \int d^D x \left[\frac{(\partial_\mu \phi)^2}{2} - g \frac{\phi^n}{n!} \right]$$

In order to render the theory renormalizable, the dimension of the space is assumed

$$D = \frac{2n}{n-2} \quad (n = 4,6,8,\ldots)$$

The invariant charge is first defined in terms of the propagator of a scalar particle using the Feynman diagram method. The method is applicable to

USSR

LIPATOV, L. N., PIS'MA V ZHURNAL EKSPERIMENTAL'NOY I TEORETICHESKOY FIZIKI Vol 24, No 3, Aug 76 pp 179-183

perturbation theory of every order, and is used here in the extreme case of a very strongly nonlinear interaction ($n \to \infty$ and thus $D \to 2$). As the charge increases, the GML function of the charge reverses sign and an ultraviolet stability point appears. The number of such points increases as $\sqrt[4]{n}$. Most interesting, from the physical standpoint, are the cases $n = 4$ and $n = 6$. This method of calculation yields for these cases results which differ from the true values by amounts of the order of $1/n$. Figures 1; references 6: 3 Russian, 3 Western.

USSR UDC: 534.232.46.001.24

BUSHER, M. K.

FREE OSCILLATIONS OF AN ELASTIC RING OF PERIODIC STRUCTURE

Moscow AKUSTICHESKIY ZHURNAL in Russian Vol 22, No 4, Jul/Aug 76 pp 497-504 manuscript received 24 Feb 75

[Russian abstract provided by the source]

[Text] Based on Reisner's variational principle a solution is found for the problem of free oscillations of a thin elastic ring that has a periodic structure. A ring is considered that is made of two materials with different elastic moduli and densities. The spectrum of the first five natural frequencies and vibrational modes of the ring is found. It is shown that in a ring with nonhomogeneous structure the separation of oscillations into two types -- flexural and longitudinal -- is fundamentally impossible. References 3: 2 Russian, 1 Western.

1/1

USSR UDC: 532.529

KOROBKO, V. I., GREKOV, V. F., and SHASHMIN, V. K., Saratov State University imeni N. G. Chernyshevskiy

DYNAMIC CHARACTERISTICS OF DISCRETE PARTICLES IN AN EFFERENT HELICAL FLOW OF HEAT-TRANSFER AGENT

Minsk INZHENERNO-FIZICHESKIY ZHURNAL in Russian Vol 31, No 2, Aug 76 pp 264-269 manuscript received 21 May 75

[Russian abstract provided by the source]

[Text] The authors determine the dynamic characteristics of a discrete particle falling under the influence of gravitational force into an efferent helical flow of heat-transfer agent and a uniform flow of heat-transfer agent based on Chen's equation and the results of numerical calculation. In the case where the particle falls into a uniform flow the calculations are compared with experimental results. References 5 Russian.

1/1

USSR UDC: 533.9.01

GALEYEV, A. A., Space Research Institute, Academy of Sciences USSR

CASCADE PROCESSES IN PHENOMENA OF PARAMETRIC INTERACTION IN A PLASMA

Gor'kiy IZVESTIYA VUZov, RADIOFIZIKA in Russian Vol 19, No 5-6, 1976 pp 653-660

[Abstract] A brief survey article on development of a nonlinear theory for parametric plasma instabilities. Parametric absorption of emission close to the critical density is considered in the elementary process of resonant interaction between an electromagnetic waveform on frequency $\omega \approx \omega_p$ with finite amplitude on the one hand, and a Langmuir-sonic wave of infinitesimal amplitude on the other hand. A cascade model of energy transfer is examined in an isothermal plasma, disregarding nonlinear interaction of "sonic" density oscillations. Approximate equations are derived for the Langmuir oscillations, and an expression is found for the effective frequency that describes the rate of dissipation of the pumping wave:

$$\nu_{\text{eff}} \approx \frac{\pi}{4}\omega_p \frac{E_0^2}{8\pi n_0 T_e}.$$

Determination of this quantity is the purpose of the nonlinear theory of parametric instability.
1/2

USSR
GALEYEV, A. A., IZVESTIYA VUZov, RADIOFIZIKA, Vol 19, No 5-6, 1976 pp 653-660

Models of parametric backscatter are discussed for an isothermal plasma, and for a nonisothermal plasma with hot electrons. References 19: 10 Russian, 9 Western.

2/2

USSR UDC: 533.9.01

GOREV, V. V., KINGSEP, A. S. and RUDAKOV, L. I.

STRONG LANGMUIR PLASMA TURBULENCE

Gor'kiy IZVESTIYA VUZov, RADIOFIZIKA in Russian Vol 19, No 5-6, 1976 pp 691-720

[Abstract] An investigation is made of modulation instability as a mechanism of dissipation in a heated plasma when the density of Langmuir noises W/nT exceeds $(\Delta k r_{De})^2$ (where Δk is the spectral width) in a broad spectrum $\Delta k \sim k$. The physical meaning of modulation instability is as follows. When there is a rise in the local density of noise energy the averaged force $\nabla e^2E^2/2m\omega^2$ acting on the electrons of the plasma pushes them out of the localization region. The charge separation field extracts ions as well, so that a minimum plasma density is formed where Langmuir noises are blocked. This is a favorable process from the energy standpoint as the frequency of Langmuir waves drops. It is shown that modulation instability leads to localization of the energy of Langmuir oscillations in separate spatial regions.

CONTENTS

1. Introduction

1/2

USSR

GOREV, V. V., KINGSEP, A. S. and RUDAKOV, L. I., IZVESTIYA VUZov, RADIOFIZIKA, Vol 19, No 5-6, 1976 pp 691-720

2. Langmuir solitons
3. Dynamics of formation and interaction of solitons
4. Resonant interaction of Langmuir solitons with plasma particles
5. Nonlinear interaction of Langmuir solitons with plasma particles
6. Development of turbulence. One-dimensional model
7. Collapse of Langmuir waves
8. Development of turbulence. Three-dimensional theory
9. Development of turbulence. Turbulent heating of particles
10. Self-similar solution of the problem of turbulent heating
11. Appendix. Some exact solutions of strong Langmuir turbulence equations

References 20: 16 Russian, 4 Western.

2/2

USSR UDC: 533.951

DEMCHENKO, V. V. and OMEL'CHENKO, A. YA.

ABSOLUTE PARAMETRIC INSTABILITY OF LOW-FREQUENCY WAVES IN A NONHOMOGENEOUS ANISOTROPIC PLASMA

Gor'kiy IZVESTIYA VUZov, RADIOFIZIKA in Russian Vol 19, No 7, 1976 pp 969-072 manuscript received 29 Aug 75

[Abstract] A method is outlined for reducing the problem of absolute parametric instability excited by a monochromatic pumping field of arbitrary amplitude in a nonhomogeneous magnetoacoustic plasma to the problem of parametric excitation of volumetric oscillations in a homogeneous isotropic plasma. Parametric stimulation of a low-frequency wave with dispersion completely determined by the rf field is examined in a strong magnetic field where the cyclotron frequency of ions appreciably exceeds the frequency of the excited waveforms. Increments in the buildup of oscillations are determined, and it is shown that spatial nonhomogeneity of the plasma has a stabilizing effect on parametric instability. References 5: 2 Russian, 3 Western.

- END -

CSO: 1862

1/1