JPRS 68399

23 December 1976

USSR

MOSCOW CITY TELEPHONE NETWORK

By

N. N. Luzhetskiy, B. S. Belikov

DISTRIBUTION STATEMENT A
Approved for Public Release
Distribution Unlimited

AMERICAN REVOLUTION BICENTENNIAL 1776-1976

Reproduced From
Best Available Copy

U. S. JOINT PUBLICATIONS RESEARCH SERVICE

REPRODUCED BY
NATIONAL TECHNICAL
INFORMATION SERVICE
U. S. DEPARTMENT OF COMMERCE
SPRINGFIELD, VA. 22161

20000317 100

NOTE

JPRS publications contain information primarily from foreign newspapers, periodicals and books, but also from news agency transmissions and broadcasts. Materials from foreign-language sources are translated; those from English-language sources are transcribed or reprinted, with the original phrasing and other characteristics retained.

Headlines, editorial reports, and material enclosed in brackets [] are supplied by JPRS. Processing indicators such as [Text] or [Excerpt] in the first line of each item, or following the last line of a brief, indicate how the original information was processed. Where no processing indicator is given, the information was summarized or extracted.

Unfamiliar names rendered phonetically or transliterated are enclosed in parentheses. Words or names preceded by a question mark and enclosed in parentheses were not clear in the original but have been supplied as appropriate in context. Other unattributed parenthetical notes within the body of an item originate with the source. Times within items are as given by source.

The contents of this publication in no way represent the policies, views or attitudes of the U.S. Government.

PROCUREMENT OF PUBLICATIONS

JPRS publications may be ordered from the National Technical Information Service, Springfield, Virginia 22151. In ordering, it is recommended that the JPRS number, title, date and author, if applicable, of publication be cited.

Current JPRS publications are announced in Government Reports Announcements issued semi-monthly by the National Technical Information Service, and are listed in the Monthly Catalog of U.S. Government Publications issued by the Superintendent of Documents, U.S. Government Printing Office, Washington, D.C. 20402.

Indexes to this report (by keyword, author, personal names, title and series) are available through Bell & Howell, Old Mansfield Road, Wooster, Ohio, 44691.

Correspondence pertaining to matters other than procurement may be addressed to Joint Publications Research Service, 1000 North Glebe Road, Arlington, Virginia 22201.

BIBLIOGRAPHIC DATA SHEET	1. Report No. JPRS 68399	2.	3. Recipient's Accession No.
4. Title and Subtitle MOSCOW CITY TELEPHONE NETWORK			5. Report Date 23 December 1976 6.
7. Author(s) N. N. Luzhetskiy and B. S. Belikov			8. Performing Organization Rept. No.
9. Performing Organization Name and Address Joint Publications Research Service 1000 North Glebe Road Arlington, Virginia 22201			10. Project/Task/Work Unit No. 11. Contract/Grant No.
12. Sponsoring Organization Name and Address As above			13. Type of Report & Period Covered 14.

15. Supplementary Notes

MOSKOVSKAYA GORODSKAYA TELEFONNAYA SET', 1947, Moscow

16. Abstracts

The report contains a brief review of the history of the Moscow City Telephone Network.

17. Key Words and Document Analysis. 17a. Descriptors

USSR
Communications
Telephone System
Moscow

17b. Identifiers/Open-Ended Terms

17c. COSATI Field/Group 17B

18. Availability Statement	19. Security Class (This Report)	21. No. of Pages
Unlimited Availability Sold by NTIS Springfield, Virginia 22151	UNCLASSIFIED	82
	20. Security Class (This Page) UNCLASSIFIED	22. Price

JPRS 68399

23 December 1976

MOSCOW CITY TELEPHONE NETWORK

Moscow MOSKOVSKAYA GORODSKAYA TELEFONNAYA SET' in Russian 1947 pp 1-84

[Book by N. N. Luzhetskiy and B. S. Belikov, Svyaz'izdat]

CONTENTS

PAGE

FOREWORD 1

I. INTRODUCTION 2

II. 1881-1901. The Bell Society Concession 4

III. 1901-1918. The Concession of the Swedish-Danish-Russian Joint-Stock Company. Transfer of the MCTN to the State 18

IV. 1918-1931. Operation of the MCTN During the First Years of the Soviet State. The Beginning of Regionalization and Automation of the Network 35

V. 1931-1941. Automation and Further Development of the Moscow City Telephone Network 51

VI. 1941-1945. Operation of the Moscow City Telephone Network During the Great Patriotic War 61

VII. CONCLUSIONS 78

[I - USSR - F]

FOREWORD

Moscow, our nation's capital, is celebrating it 800th anniversary in this year of 1947

/Text/ The Moscow City Telephone Network (MCTN), providing telephone communications in the capital, is one of the most important enterprises of Moscow. These few pages from the history of the MCTN, among the oldest telephone enterprises in the Soviet Union, will doubtless be of interest not only to communications workers, but also to a broad range of workers.

In 1882, Moscow had but a single small telephone exchange with primitive switchboards; today, the Moscow City Telephone Network is a great enterprise, supplied with advanced equipment.

During the difficult years of the great patriotic war, the workers of MCTN set great examples of selfless struggle to provide the capital of the USSR with model telephone communications.

The present work is the first attempt, based on scattered materials, the recollections of old workers, archival documents and other sources, to present a brief review of the history of the MCTN. The authors would be grateful to any readers who might send comments concerning the work.

Readers should send their letters to Svyaz'izdat Press (Moscow, Kirov Street, 40).

The Authors

I. INTRODUCTION

In 1876, Graham Bell first demonstrated his newly invented device for transmission of sounds over long distances, which he called the telephone, at an exhibition in Philadelphia. This demonstration of the operation of the telephone was viewed with great interest by visitors at the exhibition. All who saw it were delighted with the new instrument and predicted a great future for it.

These predictions were justified. As culture, industry and trade developed, all mankind felt an increasing need for some method of transmitting speech over long distances. Therefore, Bell's discovery, one of the first successful attempts in this direction, immediately provided an impetus for a number of other brilliant developments and improvements in this area. The invention of the carbon microphone, the use of the induction coil, the application of alternating current to send out a call signal, the creation of the first, though primitive, telephone instruments and switching devices, all of this allowed the application of Bell's remarkable invention under practical conditions for both city and intercity telephone communications within a comparatively short period of time.

In 1878, just two years later, the world's first city telephone exchange for public use was opened (in New Haven).

In later years, the development of city telephone networks was so rapid that by the end of 1880, most of the large cities of many countries had public city telephone exchanges. The capacity of some of these exchanges was numbered in the hundreds and even thousands of subscribers (for example, in July of 1880 the London telephone network had 609 subscribers, while each of the city telephone networks of New York, Boston, Philadelphia and Chicago by mid 1881 had over 3000 subscribers).

Interest in construction of public city telephone networks developed in Russia early in 1881. The telegraph department of the Ministry of Internal Affairs began to receive requests from various societies and individual entrepreneurs for the concession to construct and operate city telephone networks in the largest cities of Russia.

Soon after this, the Ministry of Internal Affairs signed the necessary contracts with the private entrepreneur engineer von Baranov for the construction and operation of public telephone networks in the five largest cities of Russia, including Peterburg and Moscow. The term of the concession was 20 years: from 2 November* 1881 through 1 November 1901.

---

*In Chapters I, II and III, all dates are given in the old style.

According to the contracts, von Baranov was to pay the state 10% of the subscribers' fees received from individuals, 5% of the subscribers' fees received from city and government institutions.

However, von Baranov, without even beginning the construction of these telephone networks, sold his concession to the Bell International Telephone Society in New York at a great profit. New contracts were concluded with this Society under the same conditions. Thus, the construction of the first city telephone networks in Russia, including the Moscow network, was in the hands of the Bell Society.

II. 1881-1901. THE BELL SOCIETY CONCESSION

1. The pre-use period and opening of the first telephone exchange in Moscow

Immediately after signing the contract, the Bell Society leased quarters in the top (fifth) floor of No. 6 Kuznetskiy Most Street and began construction of Moscow's first public telephone exchange.

The work went rather fast, and by the middle of 1882, the construction of the exchange was basically complete.

On 22 May 1882, the newspapers of Moscow proudly published the first announcement of the Bell Society concerning the upcoming grand opening of the telephone exchange:

> "BELL INTERNATIONAL TELEPHONE SOCIETY FROM NEW YORK TO MOSCOW
>
> The representative of the Telephone Society of Moscow announces that at the present time the construction of the Central Telephone Exchange, located on Kuznetskiy Most, in the Popov Building, is almost completed. The primary concern of the Society is the rapid construction of telephone lines, for which purpose they need to know as soon as possible the direction most suited to potential subscribers. The representative therefore requests of all imperial, city and public institutions, as well as all individuals desiring to subscribe to telephones, that they make their wishes known to the Moscow Telephone Office (Kuznetskiy Most, Popov Building). Applications will be received daily in the office, where special forms are available for this purpose. Fees must be paid upon installation of telephones, but not for application. The price per year for one telephone instrument including full installation is R250, while government and city institutions must pay R125. Each subscriber will receive a full list of all other subscribers. Those desiring to familiarize themselves with the design of the telephones may inspect them at the Central Telephone Exchange from 2 to 4 o'clock.
>
> Operation of the telephone system will definitely begin no later than 1 July.
>
> Plenipotentiary Representative, Association Assessor Yaroshka."

Later, in June of 1882, the Bell Society periodically placed repeat announcements in the newspapers of Moscow in which, in addition to announcing the upcoming opening of the telephone exchange, the names of persons who had applied for the installation of telephones were listed.

At the same time they published these announcements in the press, the Bell Society sent special letters to trade firms, industrial enterprises and state institutions, inviting them to become subscribers.

By the end of June, the construction of lines and installation of telephones for the first subscribers of the Moscow network were completed, and on 1 July 1882, the official grand opening of the Moscow City Telephone Exchange was held. Actually, the exchange began functioning a few days earlier -- sometime after the 20th of June; at the time, there were 26 telephones in the network.

The first subscribers to the Moscow telephone network were primarily private firms, merchants and industrialists.

The construction and opening of the Moscow telephone exchange was widely reported by the press. A number of the newspapers of Moscow published articles describing the exchange and the method used to connect subscribers.

2. How the first Bell Society exchange in Moscow was constructed.

The first telephone exchange in Moscow, opened in 1882, like all exchanges of the time, was an MB system exchange, without a multiple field, with single-wire subscriber lines. The exchange was located in a large room on the top floor of No. 6 Kuznetskiy Most. Here, along two walls of the room, in two rows (eight per row) were the 16 Gililand system "switchboards" (Figure 1) [photographs not included in translation], each having a capacity of 50 numbers. The primitive switching system (Figure 2), invented by the American Gililand, was similar to the Swiss commutator borrowed from telegraph practice. It consisted of a vertical board and a horizontal table, on which were located groups of vertical and horizontal strips, as well as signal valves. Connections were made by means of plugs. When a plug was pushed into one of the jacks, a connection was made between the corresponding vertical and horizontal strips. Each switchboard, in addition to 50 subscriber lines, could handle up to 90 connecting lines for communication with the neighboring switchboards in the exchange.

From each switchboard, a bundle of 50 insulated wires passed through a square hold in the ceiling to the main vertical structure ("the tower") installed on the roof of the building over the telephone exchange. This

tower was a massive metal structure with innumerable insulators. From the tower, the lines of telephone poles radiated outward in all directions in eight main rows. They crossed Teatral'naya Square in a single long span, extended along Sretenka, Myasnitskaya, passed by the streets of Meshchanka along Pokrovka, along Arbat, and extended to Presnya, to Zamoskvorech'ye (Figure 3), to Taganka, etc. The lines were at first made of 2.2 mm steel wire. Later, bronze wire 1.25 and 1.4 mm in diameter came into use. There were no cables. Each line terminated in a Black-Bell type MB instrument, which was grounded.

The telephone instruments were of a unique but imperfect design. The handset consisted only of the speaker. The microphone was mounted in the body of the apparatus. This forced the user to hold his mouth close to the body of the apparatus and conduct the conversation in an uncomfortable position. The hook upon which the earpiece was hung was so poorly designed that the Bell Society, in the instructions for the use of the telephone which they sent to subscribers, stated forthrightly, "after removing the earpiece from the hook, lift upward on the hook, to be sure that it has moved to its full upward position."

Late in 1884, the Bell Society moved its telephone exchange to new quarters at No. 14 Kuznetskiy Most. The transfer of the exchange to the new room was performed without interrupting telephone service in a very short period of time. During this transfer, the capacity of the exchange was apparently slightly increased, although the system of switchboards remained the same as before.

The first Bell exchange in Moscow did not operate satisfactorily. The lack of a multiple field, as the number of subscribers increased, made operation of the telephone exchange increasingly complex, and when the number of subscribers reached several hundred, normal operation of the exchange became simply impossible during the hours of peak load. There were cases when subscribers, desiring a connection, literally waited for hours to make contact with the persons with whom they wished to speak.

This was the source of many complaints. More than once, the press reported the poor operation of the Moscow telephone exchange. One story by A. P. Chekhov* is a humorous account of the faults of the operation of the Moscow telephone system.

The problem was that the correctness and speed of connections between subscribers to the first Bell telephone system in Moscow depended not only

---

*"On the Telephone," in "Budil'nik," No. 3, 1886.

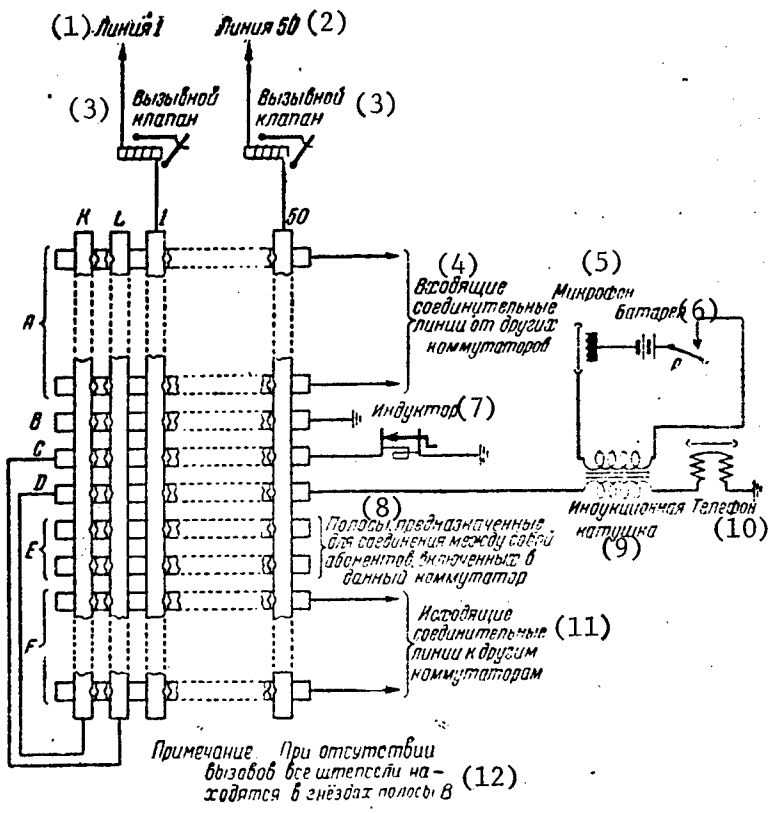

Figure 2. Diagram of Moscow's first city telephone exchange, constructed by the Bell Society

Key:

1. Line 1
2. Line 50
3. Call button
4. Incoming connecting lines from other switchboards
5. Microphone
6. Battery
7. Inductor
8. Strips for connection of subscribers connected to this switchboard
9. Induction coil
10. Telephone earpiece
11. Outgoing connecting lines to other switchboards
12. Note. When there are no calls, all plugs are located in the jacks of strip B.

on the proper operation of the lines and instruments, but also and to a considerable extent on the work of all of the telephone operators and the attentiveness with which they attended to their duties. Actually, connections between subscribers were made as follows. The operator serving a given group of subscribers, after receiving the call signal, spoke with the subscriber. If the subscriber asked to be connected with a number which was connected to another switchboard, the operator, after talking with the subscriber, loudly shouted out the required number. Another operator, at the switchboard connected to the required number, when she heard the number shouted out and verified that the number desired was not busy, connected it to a free connecting line leading to the switchboard of the first operator, loudly shouting this information back to her. The first operator, in turn, then reported to the original subscriber that the connection was ready and pushed his plug into the connecting line between switchboards.

Thus, every connection and disconnection of subscribers, in most cases, required two operators.

The loud conversations between operators created a terrific noise and confusion at the telephone exchange. This resulted in constant errors in connections, and the process of making connections was quite slow. Furthermore, the continuous noise, shouting of numbers, complaints of subscribers of slow or incorrect connections, all of this constantly agitated the operators. Not without reason, one visitor to the Bell exchange at that time wrote, "in spite of the great need, it was rare that any of them (operators) was in any condition to tolerate this work for long, particularly after first arriving. Nervous exhaustion frequently forced one of the operators to resign after a few weeks of work" ("Elektrichestvo" No. 11-12, 1891).

The situation was no better with the lines, though the lines of the Moscow network, according to the reports of the official representatives of the postal and telegraph department, were maintained in model order. The long bundles of single-wire lines created induction. Clicks and noises were heard over the phone. At times, the induction was so strong that telephone conversations became simply impossible.

Throughout almost the entire period of operation of the Moscow network by the Bell Society, the average length of the wires for a subscriber line was over 2.5 kilometers, as can be seen from Table 1.

Quite understandably, with this great length of wire of subscriber lines, the telephones were frequently out of order, and repairs sometimes required days. There were frequently cases when a line repairman was required to expand an entire working day to repair a single fault.

Table 1

Years	Mean length of wire of one subscriber line, km
1882-1885	2.97
1886-1889	2.88
1890-1893	2.62
1894-1897	2.51

Actually, in order to find the problem on a subscriber's line if the problem occurred outside the subscriber's building, the repairman would be forced to inspect the entire line, beginning at the exchange, crawling over dozens of rooftops, etc. This required a great deal of time. The Bell Society realized that repairs were often greatly delayed, and therefore deductions from subscriber's fees for lack of telephone service were given only if the telephone could not be repaired within seven days.

It was also difficult to install new telephones. Each time, a new wire had to be strung from the telephone exchange to the home of the subscriber, restringing many operating lines along the way and frequently installing new telephone poles and supports. It was also necessary to ask permission of many landlords to install telephone supports on the roofs of the buildings which they owned. Some refused, requiring that the lines be strung around their property. Furthermore, the anxious subscriber himself had to receive permission from his landlord for installation of the telephone in the building, since the Bell Society would accept no applications without such permission.

In spite of these difficulties and shortcomings in the operation of the Moscow telephone exchange, the demand for telephones continually increased and the number of subscribers to the telephone network rose with every passing year.

3. The reconstruction of the Bell exchange.

In the early 90's, the Bell Society, in order to improve the operation of the telephone exchange, undertook a basic redesign and expansion of the exchange to a capacity of 3000 numbers. In place of the primitive Gililand switchboards, 15 rack type MB switchboards with multiple fields* were

*The multiple field was invented by Scribner in 1879.

installed, each of which was designed to serve 200 single-wire subscriber lines. A diagram of the telephone exchange after this redesign is shown in Figure 4. Furthermore, a so-called "cross board" (distributing frame) was constructed at the exchange, which the old Bell exchange simply did not have. Subscriber lines came to this frame from the switchboards on 20-conductor cables. Here in this frame, each subscriber line had a lightening arrestor consisting of two copper plates insulated from each other by a flat, thin piece of paper saturated with paraffin. One plate was connected to the subscriber line, the other to ground. The distributor frame also included a testing desk, from which subscriber lines could be checked.

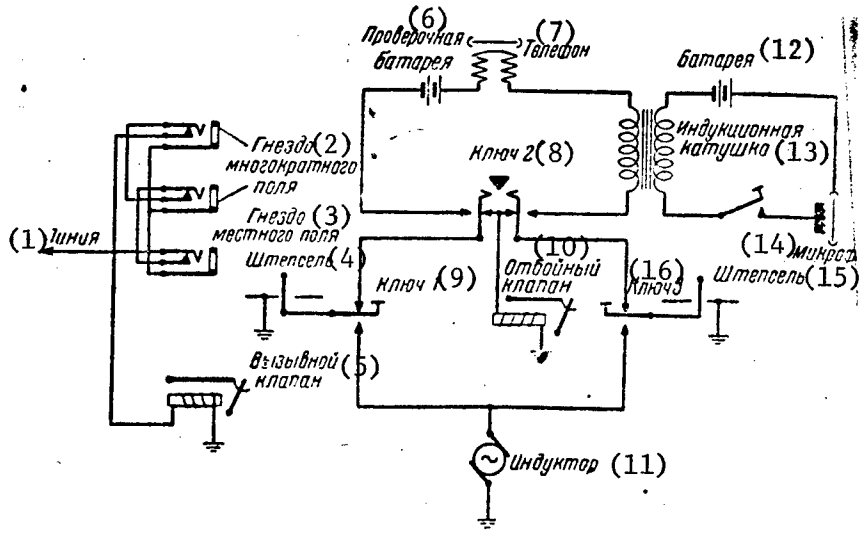

Figure 4. Diagram of Moscow City Telephone Exchange operated by Bell Society after its redesign

Key:

1. Line
2. Multiple field jack
3. Local field jack
4. Plug
5. Call button
6. Test battery
7. Receiver
8. Switch 2
9. Switch 1
10. Disconnecting switch
11. Inductor
12. Battery
13. Induction coil
14. Microphone
15. Plug
16. Switch 3

From the distributing frame, the subscriber lines also traveled over 20-conductor cables to a room on the roof, from which the individual insulated lines, grouped in bundles of 20 wires, went out through iron pipes to the roof to the main tower of the telephone exchange.

After this redesign, the quality of operation of the Moscow telephone exchange was significantly improved. Now, only one operator was involved in the servicing of each call. Calls were serviced more rapidly. Incidences of incorrect connections became rare. The number of complaints of poor operation of the telephone exchange decreased greatly. The labor of the operators was also significantly improved. The operators now no longer had to shout at each other to service calls, attempting to be heard above their neighbors. In place of the previous noise, nervous shouts, and disorder at the exchange, the situation became normal and businesslike. Each operator quietly, in a subdued voice, spoke with her group of subscribers, rapidly and correctly making the required connections.

Simultaneously with the redesign of the exchange, there was a partial reconstruction of the telephone network line system. It consisted in that bundles of open lines were removed in the main, most heavily loaded directions and replaced by suspended cables. 28 and 54 conductor cables were used for this purpose. At first, the suspended cables were comparatively short. Thus, according to statistical data in 1891 the total length of suspended cables in the Moscow telephone network was only:

28 conductor cables - - - - - - - - - - - 7.050 kilometers
54 conductor cables - - - - - - - - - - - 0.085 kilometers

In subsequent years, the length of suspended cables increased somewhat, but large groups of open lines continued to predominate in the network.

Conversion of the Moscow network to the two-wire loop system was not undertaken by the Bell Society and the network continued to operate by the single-wire system until the end of the concession.

4. Number of subscribers of the Moscow telephone network.

The Bell Society, which did not charge for the installation of new instruments, demanded a very high fee for the use of each telephone. For example, individuals paid a subscriber's fee of R250 per year, government and city institutions -- R125 per year. Furthermore, if the telephone line was over three versts in length, the subscriber was required to pay an additional R50 per year for each additional verst above the first three.

In spite of the high charge for telephones, the number of subscribers to the telephone network increased regularly from year to year (Figure 5).

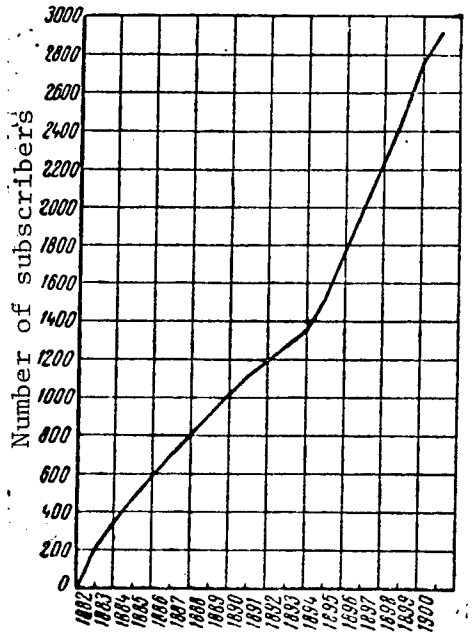

Figure 5. Growth in the number of subscribers of the MCTN between 1882 and 1900.

By the mid 90's, the Moscow exchange had connecting lines, connecting it with a number of other telephone exchanges in the area (Khimki, Odintsovo, Bogorodsk, Pushkino, Podol'sk, etc.). Thus, subscribers of the Moscow telephone exchange could make calls to other areas around Moscow.

We must note that the high subscriber's fee made the telephone quite inaccessible for most of the population, and therefore the Moscow City Telephone Network during the period of the Bell Society concession was predominantly used by the commercial and trade circles, banks, trade houses, offices and other business enterprises.

The structural composition of the subscribers of the Moscow telephone network in 1895 is shown in Table 2.

The population of the capital more than once demanded of the administration of the city that the fee for the use of Moscow's telephones be reduced. The dissatisfaction of the population and the number of complaints were so great

that the Moscow City Council was forced twice (on 17 March 1897 and 13 September 1897) to discuss the question of reducing subscriber's fees at its sessions. However, the City Council was powerless in its struggle with the capitalist concession holders, and the price for telephone subscriptions remained the same throughout the entire period of the concession.

Table 2

Category of subscribers	Percentage of total number of subscribers
Apartments	20
Trade firms and stores	47
Plants and factories	8
Imperial institutions and organizations	9
Other subscribers	16
Total	100

As would be expected, the greatest number of subscribers of the City Telephone Exchange was located at that time in the central portion of Moscow (within Bul'varnoye kol'tso and in Kitaygorod). However, by the 90's, there were a number of telephones installed throughout the city and even beyond the gates. Figure 6 shows the distribution of subscribers of the Moscow telephone network by regions of the city in the second half of 1895. Subscribers lines extending beyond the gates of Moscow were transferred by the Bell Society, with a few exceptions, to the Moscow postal and telegraph district four servicing.

At first, the Bell Society inserted lists of its subscribers in the newspaper "Moskovskiye vedomosti." But later, when the number of subscribers had increased significantly and the lists became cumbersome, they began publishing lists of subscribers in individual brochures. The first list of subscribers of the Moscow City Telephone Network was published in brochure form in 1895.

The administration of the Moscow City Telephone Network, during the period when it was operated by the Bell Society, was headed by a director. He was the Plenipotentiary of the Society and was given the full confidence of the Society. The director of the network answered to the Society, primarily, for the profitability of the enterprise.

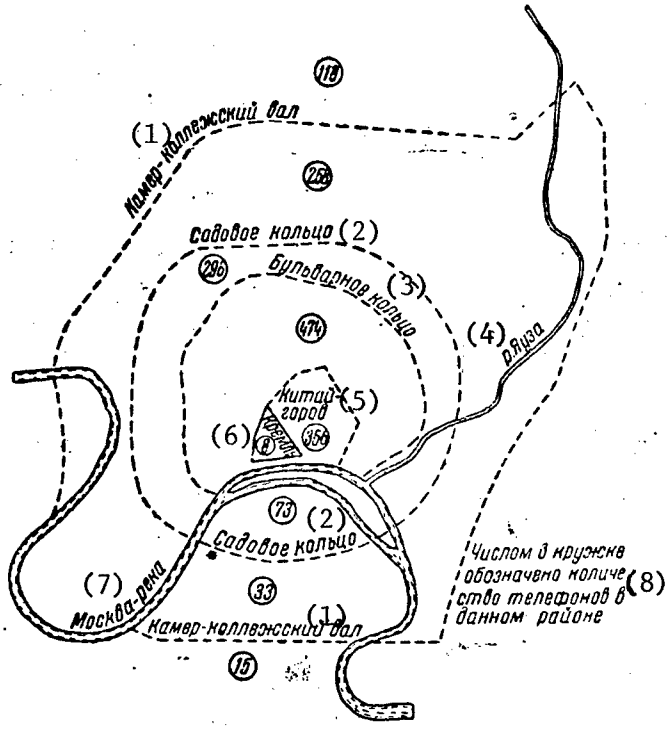

Figure 6. Distribution of MCTN subscribers among regions of the city during the second half of 1895.

Key:

1. Kamer-kallezhskiy val
2. Sadovoye kol'tso
3. Bul'varnoye kol'tso
4. Yauza River
5. Kitaygorod
6. Kremlin
7. Moscow River
8. Numbers in circles represent number of telephones in the region

The technical section was headed by the chief engineer of the network, the assistant to the director. The chief engineer was in charge of all technical structures (exchange equipment and lines) and extensive staff of service personnel (operators, technicians, linemen).

5. Unsuccessful attempt to organize public telephone offices.

During the time of operation of the Moscow network by the Bell Society, no public telephone facilities were available in Moscow, though the population

of the capital felt the need for such facilities and individual attempts were made to organize them.

In October of 1893, a certain engineer Popov, after preliminary consultation with the Bell Society, applied to the Moscow City Council with a request to permit him to construct in the territory of the city in the most heavily populated areas 60 special pavilions with telephone, to be connected to the Moscow City Telephone Exchange. He proposed to provide a number of telephone services to the population of the city for a definite, comparatively low fee. In particular, he proposed to:

1) allow persons to call from the telephone pavilion any of the subscribers of the Moscow network (fee 15 kopecks);
2) transmit telephone news (telephonograms) from the telephone pavilions to any resident of the city not having a telephone (fee 20 kopecks), by transmitting such a telephonogram to the point of transmission to another telephone pavilion located near the residence of the addressee, and also delivering the telephonogram by special service personnel attached to the telephone pavilions;
3) when necessary, to return with a reply to the sender of the telephonogram (fee 25 kopecks), etc.

In spite of the clear advantage for the population of the capital to be gained by the organization of such a generally accessible and inexpensive telephone service, the Moscow City Council, after discussing the suggestion of engineer Popov, did not agree to the construction of such telephone pavilions.

Three years later, in 1896, engineer Popov once more petitioned the City Council with the same request. The Council requested that the "Commission of the city government concerning the uses and needs of the society" make recommendations on this matter, listen to the report of the commission at their next session and . . . once more turned down engineer Popov.

This incident rather clearly demonstrates the indifferent and even negative attitude of Moscow's city administration to the idea of making telephone communications accessible to the whole of the population of the capital.

6. End of the term of the concession. New negotiations in Peterburg.

At a meeting held on 31 March 1900, the Moscow City Council, due to the approaching end of the term of the contract concluded with the Bell Society, adopted a resolution to appear before the Ministry of Internal Affairs and

request that the Moscow City Telephone Network be placed under the control of the city administration. This request of the City Council was declined by the government and on 31 May 1900, a committee of ministers proposed to open negotiations for the operation of the Peterburg, Moscow and certain other city telephone networks for the next 18 year period. Thus, the government once more refused to take control of the largest Russian telephone networks and decided to continue the previous policy of developing telephony in Russia, primarily, by the attraction of private capital.

After hearing that the committee of ministers had called for new negotiations and not desiring to give up their dream of taking control of the telephone network, the Moscow City Council, at a meeting on 8 August 1900, after lively debate, decided to request of the government that the Moscow city administration be permitted to participate in the negotiations. This time, Peterburg agreed.

The negotiations were held on 7 November 1900 in Peterburg, in the Main Administration for the post and telegraph, under the chairmanship of the Chief of the Main Administration, Lieutenant General Petrov. According to the conditions worked out in advance, the right for further operation of the city telephone networks was given to the competitor who proposed the lowest subscriber's fee for the use of a collective telephone. In accordance with this, each of the participants organizations presented a sealed envelope, containing the proposed subscriber's fee bid by the organization.

Three competitors bid for the operation of the Moscow telephone network: the Western Electric Company in Chicago, the Moscow City Administration and a Swedish-Danish-Russian independent telegraph society.

On 15 December 1900, the Main Administration for post and telegraph, in accordance with the results of the competition, drew up a contract with the Swedish-Danish-Russian society. The conditions of the contract were very favorable for the society. According to the contract, the society was given the right to operate the Moscow telephone network for a period of 18 years beginning on 1 November 1901, and the society acquired from the government all existing line and exchange structures for R271,000 to be paid over the course of the 18 years, one-eighteenth part per year plus interest in the amount of one-sixth of the annual payment for the remaining unretired portion of the debt. Furthermore, the society was to pay to the state each year three percent of the sum of the subscriber's fees collected during the course of the year for the use of the telephones. In contrast to the previous agreement concluded in 1881 with the Bell Society, the new agreement stated that the Swedish-Danish-Russian joint-stock company would retain rights in property to the Moscow network even at the end of the term

of the contract. The government retained only the right, if it should find it necessary, to buy back the Moscow network after 1 November 1911, that is after 10 years.

During the night between 1 and 2 November 1901, the Swedish-Danish-Russian joint-stock telephone company took over the operation of the Moscow telephone network from the Bell Society, with its 2860 operating telephones.

Thus ended the first 20 year period of existence of the Moscow City Telephone Network.

III. 1901-1918. THE CONCESSION OF THE SWEDISH-DANISH-RUSSIAN JOINT-STOCK COMPANY. TRANSFER OF THE MCTN TO THE STATE

1. Construction of the new Central Telephone Exchange and reconstruction of the network.

After receiving the concession to operate the Moscow City Telephone Network, the Swedish-Danish-Russian joint-stock telephone company began to expand and basically reconstruct the exchange and line structures. First of all, it took over a portion of the building at No. 5 Milyutinskiy Pereulok (now Markhlevskogo Street) and in 1902 began construction of a new building for the Central Telephone Exchange. Furthermore, by 1903 the company opened a temporary supplementary exchange with a capacity of 1650 numbers. Construction of the temporary exchanged allowed the Swedish-Danish-Russian company to increase the capacity of the existing exchange taken over from the Bell Society to 4650 numbers and thus to satisfy the demand for the installation of new telephones, which had significantly increased due to the reduction in subscriber's fees.

At the same time, work went forward rapidly on expansion and reconstruction of lines. The new operators of the system, in accordance with the agreement, which called for the transition of the network to a two-wire system and replacement of open lines in the main directions with underground trunk cables, actually began construction of a new telephone network.

The new network was constructed according to the so-called frame system. From the central exchange on Milyutinskiy Pereulok, trunk cable lines went outward in six directions. The construction of the trenches for these lines was begun in 1902. The high capacity trunk cables pulled through these underground tunnels led to street cable distributors. The trunk tunnels were constructed primarily of cylindrical concrete pipe. Furthermore, at the secondary branching points of the trunk cable system, rectangular and triangular concrete pipe of smaller capacity was buried. The main trunk line pipes had manholes for inspection. These were generally quite small (so-called seven-hole boxes) with large square hatches. In order to reduce the cost of burying the cables, they were laid beneath the traveled portion of the streets, not beneath the sidewalk.

In the central portion of the city, the company usually installed street distributor frames with a capacity of 1200 x 2. In large areas within the ring road, the company proposed the installation of high capacity frames (up to 2400 x 2), so-called cable booths. These booths, in particular, were installed at the Prechistenskiy (now Kropotskinskiy) gates, at the Arbatskiy gates (now Arbatskaya square) and in other locations. At the squares of

Sadovoya Kol'tso, booths were installed, as well as distributors of still greater capacity -- kiosks*. The booths and kiosks were installed: on Taganskaya Square, Serpukhovskaya (Dobryninskaya) Square, Zubovskaya Square, Smolenskaya Square, Kudrinskaya Square (Vosstaniya Square), Sadovo-Triumfal'naya Square (Mayakovskogo Square), Ugol'naya Square, etc. Most of these booths and kiosks no longer exist.

Between Sadovoye and Bul'varnoye Kol'tso and within the limits of Sadovoye Kol'tso, distributors (frames) of smaller capacity were installed, initially most of these not having direct trunks and operating as class II frames, supplied by trunk cables from the kiosks and booths.

The underground distribution network fed out from the street distributors. The distributing cables passed beneath street crossings and, branching out, extended to the walls of the buildings, where they were terminated in 5 x 10 and 10 x 2 distributing boxes, generally installed on the outer walls of buildings on the street side or cable boxes on poles. In areas of small buildings, the distributing cables were brought up to cable towers (mostly iron) installed at intersections of streets or in squares, and also terminated in cable boxes.

Within the limits of Sadovoye Kol'tso, the distributing cables were laid along thoroughfares beneath the roadway in concrete single-aperture pipes, with closed type oval boxes (without hatches). Branches to buildings and to cable towers were most frequently made using cables laid in so-called Warsaw armor. Within individual properties, the cables passing underground from building to building were laid beneath angle iron. In part, outside of Sadovoye Kol'tso and, primarily, beyond Kamer-Kollezhskiy Val, the concessioners preferred to construct the distributing network of armored cable and cable under angle iron, in spite of the fact that many cables were quite long. This is explained by the fact that at that time beyond Sadovoye Kol'tso most of the thoroughfares had no pavement. Therefore, the repeated excavation work required to repair damaged cables or lay new cables in the same direction did not require the cost of repaving and were cheaper to the company than the laying of pipe.

For reasons of economy, the concessioners preferred to construct cabled poles and high capacity towers so that there were as few cable terminals as possible and so that each might serve several blocks of the city. In particular, the cable towers were installed primarily with 28, 56 and 100 pairs. Figure 7 shows an iron cable tower, Figure 8 -- a 28 x 2 cable pole.

---

*The first distributing frames in Moscow were installed in 1903, the first cable kiosks in 1904.

The subscriber network constructed by the concessioners (open lines and single pair wires) was almost the same in design as the subscriber network existing in Moscow at the present time. Only within buildings, instead of running 1 x 2 cable, knob-mounted cord was run.

The construction of the new building for the Central Telephone Exchange at Milyutinskiy Pereulok was supervised by architect A. K. Erikson, according to a plan by architect professor I. G. Klasson. Beginning in 1904, a building in the form of a rectangular tower was constructed (Figure 9). Later, extension to the building were constructed.

In 1904, installations were completed in the yard around this building and the first section of the new Central Telephone Exchange, so-called hall A (Figure 10), the construction of which was supervised by engineer Ol'son, was put in operation. The official opening of the new exchange was celebrated on 30 October 1904.

Upon completion of installation of hall A, all telephones served by the old Bell exchange and the temporary supplementary station were switched to it, after which the old exchange and supplementary station were dismounted.

At first, the Central Telephone Exchange had a capacity of not over 20,000 numbers. Subsequently, the capacity of the exchange was gradually increased, and by 1914 had reached 60,000 numbers. By this time, the equipment of the exchange filled four halls: hall A, hall B (opened in 1908), hall C (opened in 1911) and hall D (opened in 1914); the capacity of the multiple field sections was increased to 60,000 numbers by 1908, simultaneously with the opening of hall B.

The design of the high capacity exchange corresponded to the views of most of the telephone engineers at the time. Generally speaking, there were at that time two opposite points of view. Some engineers (the minority) believed that the construction of high capacity exchanges was a mistake; such an exchange could not justify itself due to the great length and, consequently, cost of the trunk network, and therefore, in large cities, instead of one large exchange there should be several regional exchanges of comparatively smaller capacity.

Others, the majority, believed that it would be most economical to construct a single exchange of large capacity in a large city. This point of view was held, in particular, by the Russian engineers and the engineers of the Swedish-Danish-Russian joint-stock telephone company. Therefore, in the early 1900's, in a number of Russian cities (Peterburg, Moscow, etc.), telephone exchanges were constructed with capacities of several tens of thousands of numbers each.

The construction of a high capacity exchange required, first of all, a decrease in the diameter of the jacks of the multiple field (multiple) and, secondly, that certain requirements be demanded as to the height of operators servicing such multiple fields. Thus, at the Central Exchange in Moscow, in spite of the comparatively large dimensions of the sections of the multiple field (120 x 186 centimeters), the diameter of the jacks in the field and, consequently, the multiple plugs, was reduced to 3.5 millimeters. Servicing such a multiple field with this size of sections required that operators be at least 155 centimeters in height (without shoes) with armspreads of at least 154 centimeters. An overall view of a central exchange multiple field is shown in Figure 11.

2. The construction of the new Central Telephone Exchange.

The new Central Exchange was constructed on the principle of the so-called distributor system, which at the time was the last word in telephone technology*.

The essence of this system (Figure 12) consists in distribution of functions involved in servicing each call between two operators. One of the operators (the so-called signal operator) transmitted the subscriber who had called the station to a free "multiple" operator, who then directly spoke with the subscriber and made the connection with the desired number. Since a special signal system showed which of the multiple operators were free at the moment, the signal operator could always hand the subscriber over to a free operator. This significantly reduced the waiting time for an answer from the exchange, even when a large number of calls came in simultaneously. For example, in 1913 the average time required for the central station to answer was only eight seconds, with an average number of calls per subscriber per day on business days of 28.8.

When hall D was put in operation, yet another technical innovation was installed: the work of the signal operator in this hall was replaced by a 25 contact stepping switch, automatically connecting the subscriber who called the station to a free multiple operator (Figure 13). Thus, a portion of the processes involving servicing of calls in this hall was automated. This was a doubtless step forward. This system was called semiautomatic.

A manual telephone exchange of a capacity so tremendous as that of the central MCTN exchange required, of course, a rather large staff of servicing

*The world's first distributor system telephone exchange was constructed in Stockholm in 1900; this was an MB exchange. The inventor of the distributor system was I. A. Aven.

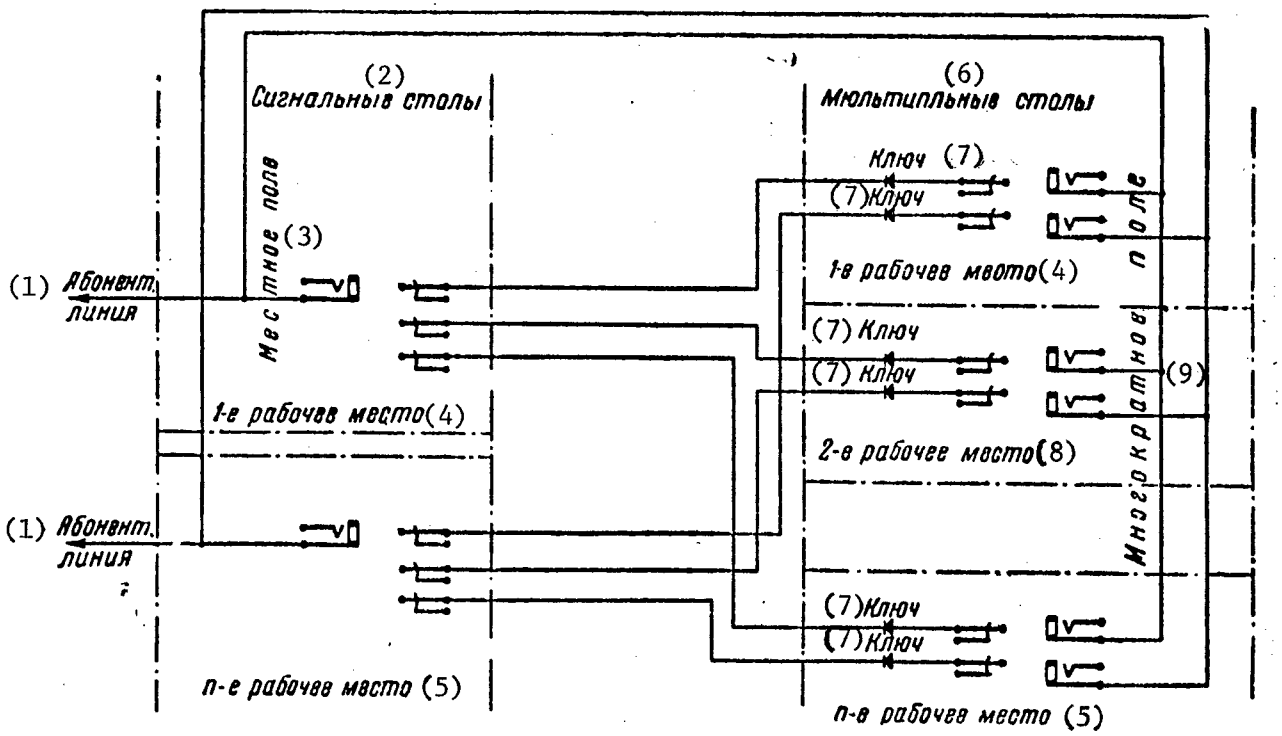

Figure 12. Skeletal plan of distributor system telephone exchange

Key:

1. Subscriber line
2. Signal benches
3. Local field
4. First working position
5. Nth working position
6. Multiple benches
7. Switch
8. Second working position
9. Multiple field

personnel. For example, in 1914, when all four halls at this exchange were in operation, the MCTN employed the following number of workers:

operators	948
installers	228
other personnel	72
Total	1248

3. Subscriber fees. Growth of number of subscribers. Construction of secondary exchanges.

At the beginning of the concession (before 1 January 1905), before the expansion of the network was completed, the Swedish-Danish-Russian company charged an installation fee of R20 plus R20 for each verst of open line.

If a subscriber was located over three versts from the Central Telephone Exchange (in a straight line) then the subscriber had to pay, in addition to the usual subscriber's fee, an additional fee for each 100 sajenes of this distance.

The growth of the number of subscribers of the MCTN between 1903 and 1916 can be seen from the data of Table 3.

The dynamics of the growth of the number of subscribers (central telephones) over the same years can be clearly seen from the curve of Figure 14.

The operation of the Moscow network by the Swedish-Danish-Russian telephone company soon demonstrated the unsuitability of having only one exchange located in the center of such a large city as Moscow. Actually, this required laying large capacity trunk cables from the central exchange to remote regions of Moscow, and each subscriber in these long cables required, of course, a separate pair of conductors. In order to reduce the cost of equipment and operation of subscriber lines, at least partially, to decrease capital investments tied up in the development of the cable network and, so to speak, to get more out of each pair of conductors going out into remote regions, the company, in the second half of their operational period, began to follow the path of construction of secondary telephone exchanges in various parts of the city and the suburbs, using the cable conductors as connecting lines.

By 1914, the Moscow telephone network had 12 secondary exchanges. The number of subscribers in each of these exchanges is shown in Table 4.

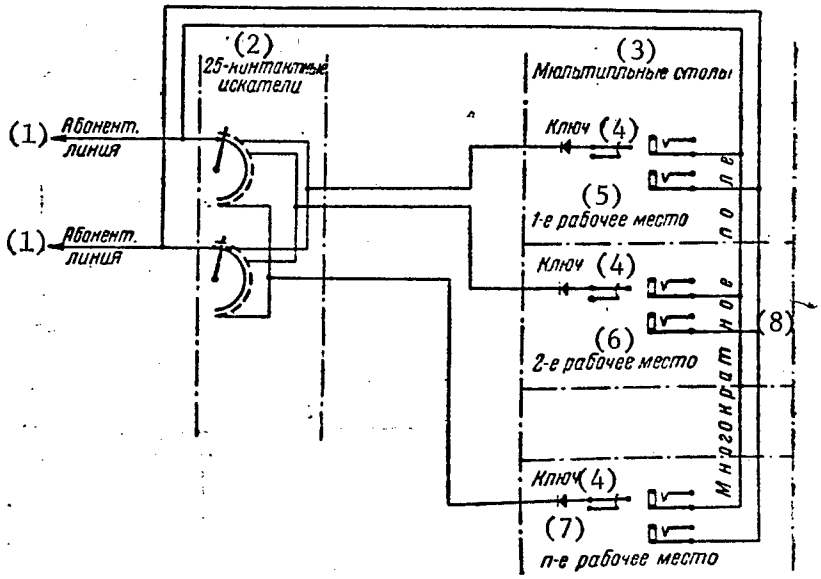

Figure 13. Skeletal plan of hall D of Central Telephone Exchange

Key:

1. Subscribers lines
2. 25 contact stepping switches
3. Multiple benches
4. Switch
5. First working position
6. Second working position
7. Nth working position
8. Multiple field

Table 3

Year	Number of telephones on 31 December		
	Central	Additional	Total
1903	4,394	1156	5,550
1904	7,844	1095	8,939
1905	10,452	1483	11,935
1906	13,740	1937	15,677
1907	17,010	2298	19,308
1908	20,146	2630	22,776
1909	23,180	2960	26,140
1910	27,370	3304	30,674
1911	33,097	3798	36,895
1912	38,815	4533	43,348

Table 3 (continued)

Year	Number of telephones on 31 December		
	Central	Additional	Total
1913	44,293	5555	49,848
1914	46,859	6712	53,571
1915	50,331	7227	57,558
1916	55,088	7892	62,980

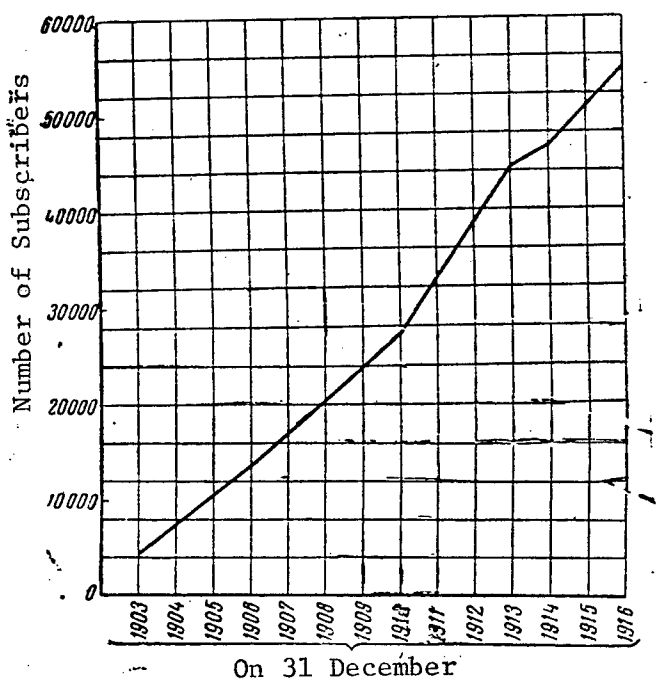

Figure 14. Growth of the number of subscribers of the MCTN between 1903 and 1916

The placement of the secondary exchanges of the MCTN, located within the city limits in 1914, is shown in Figure 15.

However, if the network of subscribers developed rather rapidly, this cannot be said of public telephones, in spite of the fact that by 1903, the Moscow City Council had raised the question of organization of public telephone points. In any case, in 1916 the Moscow network included only 51 telephone machines in the city, and 20 in the suburbs.

Table 4

Name of exchange	Number of subscribers
Sokol'niki	129
Novogireyevo	70
Losinoostrovskaya	94
Petrovskiy park	251
Blagusha	101
Vsekhsvyatskoye	73
Kuntsevo	49
Cherkizovo	112
Bogorodskoye	63
Khoroshevo	29
Lyublino	17
Sheremet'yevka	18

4. The labor of operators during the period of operation of that work by the Swedish-Danish-Russian company. Their wages and working conditions.

The labor of operators working at the central exchange was extremely hard.

In 1903, the Moscow telephone network was examined by a technical commission from the city government. In its report, presented to the Moscow City Council for analysis*, the commission reported that, visiting the Central Telephone Exchange at Kuznetskiy Most, it had gained a "very clear impression of the moral atmosphere under which the work of the operators, so terrible in its details, took place." The commission reported further that the agreement concluded between the Main Administration for the post and telegraph with the Swedish-Danish-Russian joint-stock company, "does not allow us to interfere with the situation of the operators and places them at the disposition of the joint-stock company almost without any control."

In conclusion, the technical commission mentioned the one-sided system of penalties, the extreme fatigue of the workers, the wear on their nervous systems and their extremely poor economic position.

*Report No. 48 on the question of desired improvement of the telephone situation.

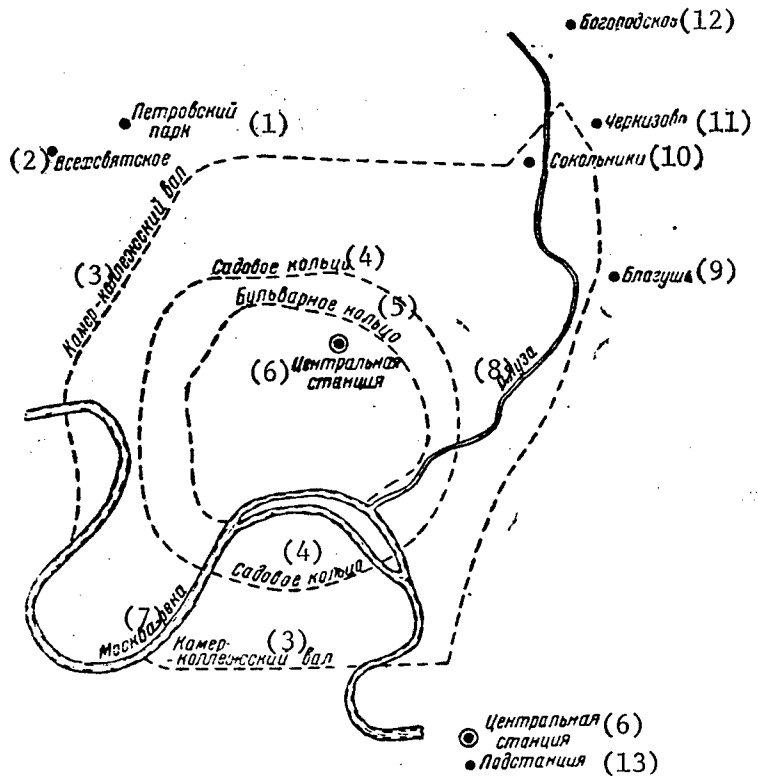

Figure 15. Placement of MCTN secondary exchanges in 1914

Key:

1. Petrovskiy park	7. Moscow River	13. Secondary exchange
2. Vsezhsbyatskoye	8. Yauza River	
3. Kamer-kallezhskiy val	9. Blagush	
4. Sadovoye kol'tso	10. Sokol'niki	
5. Bul'varnoye kol'tso	11. Cherkuzav	
6. Central Exchange	12. Bogopadskoye	

Actually, the conditions of employment, labor and wages of the operators during the first years of operation of the Moscow network by the Swedish-Danish-Russian joint-stock company was as follows. Each newly arriving operator for one month worked as a student and received no pay at all. Then, after the month was up, the student was considered a candidate and her labor was rewarded with 13 kopecks for each hour of work. When a

candidate had worked at the exchange for 12 months, her wages were increased to 16 kopecks per hour. The length of the working day was not stated. When a candidate had been employed in normal service on both of the daily shifts, she was considered a staff operator. The company deposited R2 per year in the bank in the name of each staff operator. This money was paid to the operator if she was absent from work due to illness or other acceptable reason, if she informed the administration of the upcoming absence in advance. Furthermore, operators were allowed, after two years of work, a two-week annual vacation with pay. Finally, staff operators who fell ill, if the illness was confirmed by a doctor in the employ of the Swedish-Danish-Russian company, were paid during the time of their illness, though at 5 kopecks less than for working time.

Later, when the company opened the new Central Telephone Exchange at Milyutinskiy Pereulok, the procedures for hiring and utilizing operators were somewhat altered. At first, the student operator worked at the exchange without pay. Later, when she had gained sufficient skills and could service the signal or multiple bench alone, she was transfered to the "extra" team, that is not made a part of the staff until there was a vacancy, or was used to replace operators who were ill or absent for other reasons. Such a "extra" operator was to call the telephone exchange each morning and determine whether any other operators were ill and whether she was required, therefore, to come to work. If the "extra" received a positive response, she "flew" to the exchange. She had to arrive before the others, or the position would be filled by another "extra," and the latecomer, if she could find no other work, had to return home. The "extras" were paid 15 kopecks per hour. Their monthly wage was therefore uncertain.

At the exchange, all of the staff operators were divided into two shifts. The "red" shift worked each day from 11:00 until 15:00. There was then a break until 17:00, after which the operators worked again until 19:00. Thus, the operators of the "red" shift, if they lived far from the exchange, essentially spent the entire day at the exchange. The operators of the "black" shift worked the first day from 8:00 until 16:00 (with a break of one hour), the next day -- from 13:00 until 22:00. It was easier to work on the "black" shift than on the "red" shift, since these operators had more free time.

Night duty was taken by the operators of the "black" shift. Each operator had to work nights approximately once each ten days, on the day when the operator worked from 13:00 until 22:00 on the day shift. This was called the "big night." Work continued from 22:00 until 8:00 in the morning, with a sleep break of two hours and thirty minutes. The operators were paid R2.50 for their "big night." There were also "small nights" -- from 22:00 until

24:00 or 1:00 and from 6:00 until 8:00. The pay for a "small night" was R1.50.

The telephone operators had to follow a very strict and rigid regimen. The "telephone lady" was not to be married. No interests, no thoughts were to distract her attention from the world of subscribers numbers. Only senior operators could marry, and then only with special permission from the management. The "morals" of the operator were a subject of constant supervision at the exchange and at home. Here is how one of the old employees of the Moscow telephone network has described the life of the operators:

> When Mariya Valerianovna Kruming (senior operator) appeared in the hall, we pulled ourselves up straight at our stools, just like mannequins, and she marched past, like an officer before soldiers in review . . . Should you be too deeply engrossed in your work and not hear her, there would be a sudden blow on your back -- so hard your heart would fall with fright. "What are you dreaming about? How are you holding your hands? What kind of pose is that?!"
>
> "Once I was suddenly called to the big boss. We rarely saw her. She was a very important Swedish woman -- Elga Fedorovna Nielsen. I walked to her office, unable to understand what had happened . . . When I entered the office, the boss looked me over from head to foot and said, "You came to work today in a slit skirt . . . I know that's the style, but this is not a fashion show. Sew up that slit!"
>
> "They taught us how to speak with the subscribers. The number which the subscriber asked for had to be repeated, precisely pronouncing each digit, preferably with a foreign accent. The telephone exchange belonged to a Swedish-Danish joint-stock company. The subscribers were to think that the exchange was entirely foreign, not only the equipment, but also the people.
>
> "At night, we were bothered by drunken subscribers, all sorts of people from restaurants. They either played with us, or shouted at us. We could not complain. There was one bigshot from the City Council who always shouted at the operators, like a drunken teamster. His mildest words were, "Hey, you parrot . . ."
>
> "Once Elga Fedorovna saw me crying. She asked what happened.
>
> "He called me a dirty word (who "he" was everyone knew, everyone was afraid of him).

"What can we do . . . We must be patient. He pays us money. You work for him, not he for us . . .*"

Thus were the working conditions of telephone operators during the period of operation of the network by the Swedish-Danish-Russian joint-stock company.

5. At the telephone exchange during the Revolution of 1905.

As we know, during the second half of 1905, when the revolutionary movement swept through all Russia, two political strikes occurred in Moscow one right after the other -- the first in October and the second in December, the second developing into an armed uprising of the proletariat of Moscow, suppressed by the Czar's government with merciless severity.

In contrast to many enterprises in the country, which joined the strikers, the Moscow City Telephone Network kept working through both strikes, though representatives of the network were included in the City Strike Committee. This was explained by a number of factors.

The Central Telephone Exchange was at that time a young enterprise: it had been in existence for but a little more than a year. Most of the workers had just been taken on, and therefore the team of workers had not yet become unified. The personnel of the station were quite varied, regular line workers in the staff being mixed with some representatives of the intelligentsia -- engineers, technicians, employees, operators. Their interests and material conditions were not the same as those of the workers. They had almost no contact with the workers, and were strangers to them. Even among the workers of the network there were too few who were politically developed and conscious. All of this, of course, separated the Moscow network from the leading enterprises of the capital, which took part in the strike at the first call of the strike committee.

However, though the Moscow telephone network as a whole did not answer the call of the strike committee and did not join the strike, some of the leading workers, primarily line workers, helped their sisters in any way they could. For example, two workers of the network -- team leader Men'shikov and apprentice Gorynkin -- accepted an assignment by the strike committee in December of 1905 to perform a very risky job: they disconnected all the telephones of the police administration and guards division (in the Coach House), thus paralyzing the administration of the police and gendarmes.

---

*From the article by A. Vorob'yev, "The Ladies," in "Sotsialisticheskaya svyaz'" No. 137 (937), 5 December 1940.

Other workers of the telephone network -- also line workers -- helped the strikers to construct barricades on Presnya and the approaches to it. In particular, a group of telephone workers constructed a barricade on Sadovo-Karetnaya Street, to block the way against the Kossack troops, who were attacking revolutionary Presnya. Telephone poles holding up the line passing along Sadovo-Karetnaya Street were used to build the barricade. Another group of workers took part in the construction of a barricade at Devyatinskiy Pereulok and near the former Schmidt Factory. Of course, it has been reported that our revolutionary brothers included some of the workers of the network, particularly members of the families of the workers of Presnya.

During the October strike of 1905, revolutionary workers, hoping to force the Moscow telephone network to join the strike, planned to capture the Central Exchange. Nothing came of this. The guards were warned by their agents on 13 October 1905 of the planned capture of the telephone exchange. They immediately took steps. The exchange was surrounded by soldiers, completely isolating it from the outside world.

Later, during the December armed uprising, no attempt to capture the Milyutinskiy exchange was made. The revolutionary forces, surrounded at Presnya by the ring of Czar's guards, had no chance to take the telephone exchange. This was achieved only 12 years later, during the great October Socialist Revolution.

6. The transfer of the Moscow telephone network to the state. Battles at the Central Exchange in October of 1917.

On 1 January 1917, the Czar's government purchased the Moscow network from the Swedish-Danish-Russian joint-stock telephone company. However, the transfer of the station to the ownership of the government did not change the internal disorder, increase the wages of the workers or change the working conditions in the least. Everything remained just as before.

The transfer of power in Russia to the interim government had very little effect on the life of the Moscow City Telephone Network. The working day of employees, including operators, was merely shortened by one hour, and union activity was permitted. During the interim government, the workers of the Central Telephone Exchange banded together into three separate unions -- the Union of Employees, Union of Exchange Workers and Union of Line Workers. Thus, the large group of workers of the network was broken up into three specialized unions. Although representatives of these three organizations set up a common union council at the exchange, this did not help at all, either to bring the workers together, or to increase their revolutionary

consciousness, since the overwhelming majority of members of the union council were under the influence of the Mensheviks, only a very few of the council being in sympathy with the Bolsheviks.

Later, as 1917 drew to a close and the great October Socialist Revolution began in Russia, the Kerenskiy government saw the threat of capture of the Central Telephone Exchange. This threat was more real than in 1905. Now the exchange was not captured by bands of workers, but by well-armed red guards and even regular forces who had joined the Bolshevik Revolutionary Committee.

Therefore, on 27 October, on the order of the representatives of the interim government, the Central Telephone Exchange was occupied by a detachment of 30 cadets from Moscow's military schools under the command of an ensign. The cadets, arriving at the station, set up a circular guard and prepared to repulse the attack of the revolutionary troops. The headquarters of the cadets was located at the terminal room near the measuring tables. The next day (28 October) the detachment of cadets occupying the central exchange was greatly reinforced. A new detachment of about 300 arrived, consisting of officers, cadets and volunteer college and high school students. The detachment was commanded by a captain. The new detachment began setting up the defense of the station. Barricades were made of logs and cable drums (Figure 16). A machine-gun was set up at the entrance to the building. Operators and installers were allowed to pass in and out of the exchange without interference. All others were stopped. On the day of occupation of the exchange, the cadets disconnected the telephones of the revolutionary committee and the regiments of the Bolshevik garrison.

On 29 October, the revolutionary units from the Sushchevsko-Mar'inskiy Rayon made the first attempt to take over the Central Telephone Exchange. Some 200 men took part in the operation to capture the exchange. The attack was unsuccessful, and the cadets repulsed it. The exchange remained in the hands of the interim government and continued to operate.

When it was found that a single blow would not be sufficient to take the telephone exchange, the revolutionary forces, under the command of Ensign Sablin, set up a true seige of the telephone exchange. In order to trap the cadets in ring, the revolutionary forces gradually, one after another, occupied the buildings around the telephone exchange. At the same time, the exchange was kept under methodical fire from the roofs of neighboring buildings. All communications between the exchange and the outside world were completely broken off. At that time, the cadets continued to work to reinforce the telephone exchange. Milyutinskiy Pereulok was blocked by several barricades. To protect the entrance into the building of the exchange, the cadets constructed an additional barricade of flour bags

right next to the exchange. Trenches were dug here and there around the building. Machine-guns were set up everywhere on the barricades. Somewhat later, all entry and exit to and from the station was completely stopped. The cadets let no one in or out. At the same time, they began cleaning out all "suspicious" elements in the staff of the station. All workers who had been involved in revolutionary propaganda or had been sympathetic with the uprisings were arrested and placed in the basement, where a sort of prison was set up. In this manner, the cadets saw to it that the exchange itself continued to operate, though each day the number of working positions still in operation decreased.

At first, by rifle and machine-gun fire, the red guards forced a halt to operations in halls B and D, located in the lower levels of the telephone exchange building. Then, rifle and machine-gun fire was transferred to hall C. Hall A was the last to shut down. The operators of hall A, frightened by the gunfire, fled their positions. Cadets took their places at the distributing and multiple benches. But, of course, they could not replace the operators; essentially, the telephone network in Moscow was shut down, and the Central Telephone Exchange stopped operating. After this, all life at the exchange was concentrated only in the bottom floors of the building.

Surrounded by a ring of revolutionary forces and red guards, the cadets received no help from outside. They ran out of food and ammunition. Just once, an armored column of white guards, penetrating through the seige line, brought the beseiged cadets 20 rifles, hand grenades and a single box of ammunition. Nevertheless, the position of the cadets grew worse every day.

In order to improve their position, some of the cadets attempted to sneak out and penetrate through the ring of revolutionary forces. However, only a few managed to sneak through. The others were forced to turn back.

The cadets understood that further defense of the telephone exchange was doomed to failure. This demoralized them. With each passing hour, the fighting ability of the cadets decreased. Unrestrained drunkenness began to reign at the exchange.

During the seige, the equipment rooms of the station fell into terrible condition. The halls were covered with snow, which penetrated through the broken windows and glass ceiling, and the equipment was damaged in many places. In one hall, a grenade destroyed the multiple benches.

Seeing the fruitlessness of further attempts to defend the telephone exchange, much less put it back into operation, the captain -- the chief of the garrison of the central exchange -- on the last day of the seige ordered all

of the operators and workers to leave the exchange. The preparation for the surrender began. On a large sheet, the words were written, "We are employees!" The cadets changed into civilian clothes. A mass escape began.

On 1 November 1917, after a seige lasting five days, the revolutionary forces, under intensive fire cover, attempted a new attack on the telephone exchange. This time, in addition to the units from the Sushchevsko-Mar'inskiy Rayon, soldiers of the 25th Infantry regiment, which had gone over to the side of Soviet power, and red guards from the region of the city took part in the attack. The attack was successful. The demoralized detachment of cadets could put up no serious resistance to the attackers, and the Central Telephone Exchange went over into the hands of the revolutionaries, becoming forever a Soviet enterprise*.

---

*The description of the battles at the telephone exchange were borrowed from an article by Chaadayeva, "The October Uprising in Moscow," and an article by Yatskovskiy, "At the Home of Kurnikov," (in "Moskva v Oktyabre 1917 g" Moscow Party Publishers, 1943) and a book by Lev Ostroumov, "Fabrika razgovorov" [The Conversation Factory], Federation Press, Moscow 1931.

IV. 1918-1931. OPERATION OF THE MCTN DURING THE FIRST YEARS OF THE SOVIET STATE. THE BEGINNING OF REGIONALIZATION AND AUTOMATION OF THE NETWORK.

1. The condition of the Moscow network after the October battles. Government decrees and orders relating to the telephone network of the city of Moscow. Repair of the damaged equipment. Changes in the condition of labor for MCTN employees.

The Moscow City Telephone Network, which went over in 1917 to the hands of the workers, was in extremely poor condition. The equipment of the Central Telephone Exchange was partially destroyed.

The multiple cables in many places had been damaged by bullets. Two halls, with a total capacity of 30,000 numbers, were totally put out of action. The others required major repair.

The line structures of the Moscow network were in equally poor condition. Many lines had been seriously damaged during the street battles. Most of the secondary exchanges had stopped operation.

However, the capital of the Young Soviet Republic was in acute need of normal telephone communications. The creation of the Soviet governmental apparatus, the transfer of the government to Moscow, the situation of the Civil War and the war with the interventionists, operation of industry, now in the hands of the workers, and in a state of total disorder -- all of this required immediate restoration of the operation of the telephones of Moscow.

Since it was impossible to think of total restoration of the entire telephone system of the network, what with the Civil War and the blockade, the team of workers of the network was given the assignment of partial restoration of the telephone structures as rapidly as possible, sufficiently to satisfy, primarily, the needs of industry and the military.

The workers of the Moscow City Telephone Network successfully coped with this assignment. In 1918-1920, as each month went by, additional quantities of repaired equipment began operation again at the Central Telephone Exchange. The lines of the MCTN were simultaneously repaired.

Due to the hard work of the entire team, by 1921 the first operations were fully completed and over 17,000 telephones were in operation in Moscow.

Considering the poor condition of the Moscow telephone network and many peripheral telephone networks, which had been sadly neglected by the Czarist regime, the Council of Peoples Commissars, on the instructions of V. I. Lenin, put out a number of orders concerning the telephone network of the country between 1918 and 1922.

These orders were of great significance in organizing the work of the telephone network of the RSFSR, particularly the Moscow network.

On 13 June 1918, V. I. Lenin signed an order containing concrete instructions concerning the further operation of the Moscow City Telephone Network for the duration of reduced operation by the central exchange, then under repair. The significance of this historical document is tremendous. In it, the Council of Peoples Commissars analyzed the telephone situation in the capital, not only from the standpoint of its technical and organizational quality, but also from the standpoint of intelligent social utilization of this network. For the first time in the world, plans were set to provide the convenience of telephone communications to the broadest range of the working population*.

In an order of 13 June 1918, all Moscow telephones were temporarily taken under the control of a special commission set up by the Council of Peoples Commissars. Telephone service was provided first to the Soviet organizations and enterprises in the capital. The remaining telephones were distributed among the residents of Moscow so that the use of a telephone was no longer the priviledge of those who could pay for telephones and keep them in their apartments.

In the order, it was stated that first, each building would receive one telephone set, which could be used by all of the residents of the building without exception. If the telephone were in some apartment, the owner of the apartment was to take upon himself the obligation to provide free access to the telephone to all the residents of the building. In the suburbs of Moscow, residents in buildings in which there were no telephones, were assigned to the nearest building with a telephone. In order to establish order in the use of these "regional telephones," the residents of buildings without telephones were to receive special cards giving them the right to use the telephone, the card indicating exactly which telephone the card holder was to be allowed to use. Anyone who resisted the use of the telephone on this new basis broke the law. Furthermore, this order obligated the Peoples Commissariat for the Post and Telegraph to install a sufficient number of telephone booths to serve the needs of the workers

*V. N. Podbel'skiy, Pochta, Telegraf i Telefon [The Post, Telegraph and Telephone] Second Edition, NKTP Press, Moscow, 1927.

on the streets and squares of Moscow.

Later, when the institutions and enterprises of Moscow and other cities of the country required a significant increase in telephone communications, the Council of Peoples Commissars issued a special decree, obligating the Peoples Commissariat for Post and Telegraph to disconnect all personal telephones and transfer them to the public sector. We present herewith the text of this decree.

DECREE
OF THE COUNCIL OF PEOPLES COMMISSARS

The Council of Peoples Commissars orders:

1. Telephones are to be left only in Soviet institutions, enterprises and establishments, Party, cooperative and union organizations, with individual responsible Soviet and Party workers, and also in hospitals and the apartments of physicians.

2. The telephones of individual persons are to be removed and installed first of all to provide communications for the most important economic and strategic points.

3. The number of free public telephones is to be increased to satisfy the needs of the citizens for telephone communications.

4. The Peoples Commissariat for the Post and Telegraph is to act upon this decree: in Moscow and Petrograd within one month, in the remaining territory of the RSFSR within three months.

Signed by: Chairman of the Council of Peoples Commissars V. Ul'yanov (Lenin).

Administrator of Affairs of the Council of Peoples Commissars V. Bonch-Bruevich.

Secretary L. Fotiyeva.

6 May 1920

During the second half of 1921, many telephone networks of the Republic, including the Moscow network, due to the measures which had been taken to restore and expand exchange equipment, achieved a reserve of unused exchange capacity. In this connection, the Council of Peoples Commissars once more decided to install telephones for personal use.

DECREE
OF THE COUNCIL OF PEOPLES COMMISSARS ON GIVING
THE PEOPLES COMMISSARIAT FOR POST AND TELEGRAPH
THE RIGHT TO INSTALL TELEPHONES FOR INDIVIDUALS

The Council of Peoples Commissars has ordered:

Replacing the order of the Council of Peoples Commissars of 6 May 1920 (Collected Orders of 1920 No. 39, page 177) hereby gives the right to the Peoples Commissariat for Post and Telegraph to install when possible telephones in the homes of individuals, collecting the established tariffs for installation and subscription.

Signed: Chairman of the Council of Peoples Commissars V. Ul'yanov (Lenin).

Administrator of Affairs, Council of Peoples Commissars N. Gorbunov.

Secretary L. Fotiyeva

8 September 1921

Finally, in 1922, when as a result of the transition to the NEP the Party achieved a breakthrough on the economic front and the necessary gains in industry and agriculture began to occur, the large telephone networks, including the Moscow City Telephone Network, were transferred to independent financing.

The transfer to independent financing was a key moment in the life of the Moscow network. The workers of the network began major overhaul and complete restoration of their equipment. The repair work at the exchange and on the lines was conducted on a broad front. The repair work undertaken and general improvement of the operation were greatly facilitated by the help rendered by the Moscow council and the Moscow Party Committee: many workers who had formerly been transferred to other organizations were returned to the telephone network.

Rapid improvement in the operation of the Moscow network occurred in 1925, when the repair of the equipment in halls C and D was completed and they came back on line. At this same time, the overhaul of the line structures on trunk lines A and B (Kitay-gorod, Zamoskvorech'ye and the southwestern part of the city) was completed.

In 1926, restoration of hall A, overhaul of the terminal room, electric power equipment and all remaining trunk lines (C, D, E and F) was completed. The quality of operation of the MCTN was restored to the prewar level, and even better in some areas.

As Soviet power took hold, not only did the conditions of labor improve, but also the attitude of the workers and employees of the telephone network toward their work. The team of employees of the network felt themselves to be the true masters of the now Socialist property represented by the telephone structures of the capital. From month to month, the productivity of labor increased, the struggle was taken up to improve the indicators of quality. The cruel exploitation, work under the threat of the cane and in fear of the concessioner were gone forever. No one spoke of the previous sweatshop conditions of labor. Whereas earlier, under the concessioners, operators were forbidden to marry, and pregnancy was grounds for immediate dismissal, now, under Soviet power, the working women were surrounded by daily concern and attention. A marvelous lounge was constructed at the telephone exchange, a dining hall was organized, nurseries and a kindergarten were opened. Workers in dangerous areas received additional neutralizing food. Repair workers were given special clothing. Pregnant women were transferred to easier, more quiet work and given extended maternity leave. A clinic was opened at the exchange, where the workers received free medical care. It was a matter of great concern not only to increase the qualifications of the workers, but to facilitate their general cultural development as well. It became possible to study, to enter a VUZ or technical school. The union organization of the network was concerned for the improvement of the daily life of the workers and employees. An era of creative, fruitful labor began.

2. Opening of manual secondary exchanges. Increase in the number of subscribers.

In 1923, there were only four secondary exchanges on the Moscow network: Novogireyevo, Cherkizovo, Petrovskiy Park and Sokol'niki. Each of these exchanges served a very small number of subscribers. Since under these conditions the retention of these exchanges was not economically justified, the administration of the network closed all of these exchanges in 1923, with the exception of the Novogireyevo exchange, after first connecting the subscribers of the secondary exchanges to the Central Telephone Exchange.

However, the period of recovery which was beginning at that time and the subsequent rapid development of all branches of the economy soon increased the demand for telephone communications in Moscow; the installation of telephones in remote regions was difficult due to the insufficient capacity

of the cable network. Due to this, the administration of the network, beginning in 1925, was forced once more to begin opening secondary exchanges in the areas most distant from the center of the city. The Moscow party and Soviet organizations energetically supported the supplying of telephone service to the suburbs and workers villages. They set aside areas for telephone exchanges, watched the course of the installation operations, and checked to see that the secondary exchanges were put in operation on schedule.

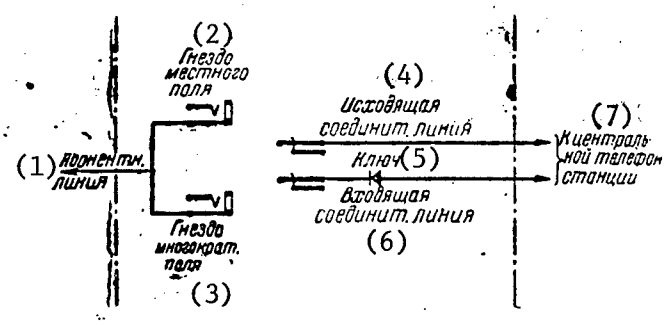

Figure 17. Schematic diagram of the Zamoskvoretskaya secondary exchange of the MCTN

Key:

1. Subscriber line
2. Local field jack
3. Multiple field jack
4. Outgoing connecting line
5. Switch
6. Incoming connecting line
7. To Central Telephone Exchange

Due to the assistance and daily checking provided by the Moscow organizations, by the end of 1925 the first three secondary exchanges were in operation -- at Zamoskvorech'ye, Cherkizovo and Kuntsevo. In contrast to the other exchanges, the 1000 number Zamoskvorech'ye exchange was the first in the Moscow network to be installed using the single-cord connector system (Figure 17). The principle of operation of this exchange differed in that each call here was serviced not by a pair of cords, as was the case in the other secondary MCTN exchanges, but by a single plug. When a subscriber took his phone off the hook, the operator of the exchange, without having to speak with the subscriber, connected him to the Central Telephone Exchange (at Milyutinskiy Pereulok) by plugging one of the free connecting lines to the central exchange into the jack of the subscriber. Calls arriving on lines coming from the central exchange were, naturally, serviced

by the operator asking what number was desired, but once again connection required only that one plug be inserted in one jack.

By 1928, one after the other, five more secondary exchanges were put in operation: Blagusha, Bogorodskoye, Losinoostrovskaya, Vsekhsvyatskoye and Petrovskiy Park.

Finally, in 1930, five more exchanges went on line: Usachevskaya, Dangauerovskaya, Leninskaya, Lyuveretskaya and Khoroshevskaya.

Thus, by the beginning of the regionalization and automation of the Moscow telephone network, in addition to the Central Telephone Exchange, there were 14 more operating secondary exchanges, the capacity of each of which was from 100 to 1000 numbers. The location of these exchanges within the city limits is shown in Figure 18.

The restoration of the damaged equipment at the central exchange and the opening of these secondary exchanges allowed the Moscow network each year to add a significant number of new telephones.

The increase in the number of subscribers to the MCTN between 1922 and 1930 can be characterized by the data presented in Table 5.

Table 5

Year	Number of subscribers
1922	17,266
1923	24,356
1924	26,088
1925	35,061
1926	40,692
1927	46,801
1928	54,211
1929	55,806
1930	58,105

The rate of growth of the number of subscribers during these years is clearly shown by Figure 19. Along with the growth in the number of subscribers, the number of coin telephones also increased (Table 6).

The rapid growth in the number of coin telephones was greatly facilitated by the fact that the Moscow council and the communications section created

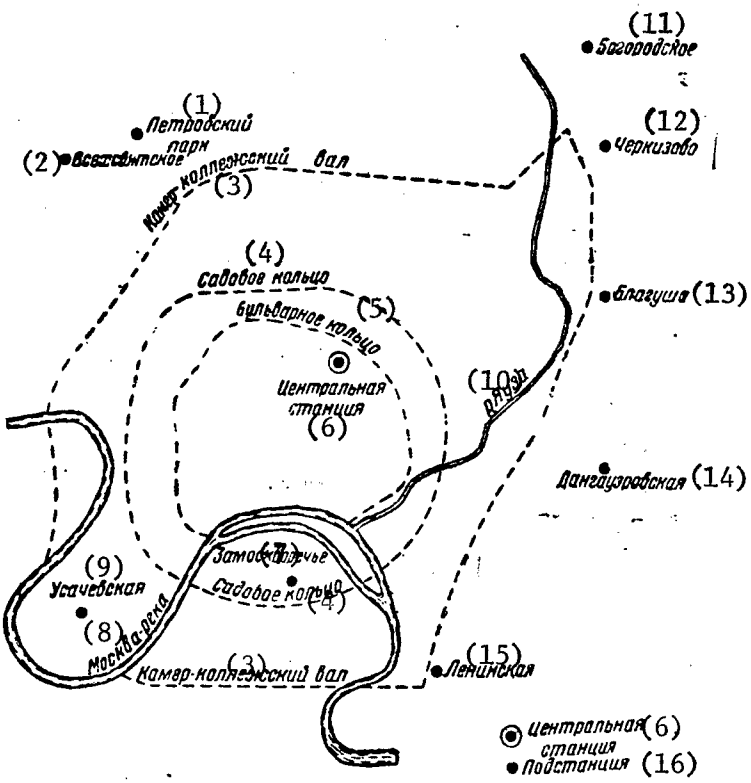

Figure 18. Location of secondary MCTN exchanges over the territory of the city in the early 1930's -- before opening of the first automatic telephone exchange.

Key:

1. Petrovskiy Park
2. Vsezhsbyatskoye
3. Kamer-kollezhskiy val
4. Sadadoye kol'tso
5. Vul'darnoye kol'tso
6. Central exchange
7. Zamoskdorech'ye
8. Moscow River
9. Usachevskaya
10. Yauza River
11. Vogorodskoye
12. Cherkizado
13. Blagusho
14. Dangauzrovskaya
15. Leninskaya
16. Secondary exchange

in it not only attached great significance to this type of telephone communications, most accessible to the broad scope of workers, but also helped in this matter in quite practical and significant ways. The Moscow Council repeatedly handed down decisions obligating the administrators of enterprises and trade organizations to cooperate with the telephone network in the installation of pay telephones: to provide suitable places for the placement of the telephones, to take part in the maintenance of the telephones, to provide electric power to eliminate the telephone booths, etc. Particular attention was returned by the Moscow Soviet to the installation of pay telephones in the suburbs of the city and in workers villages.

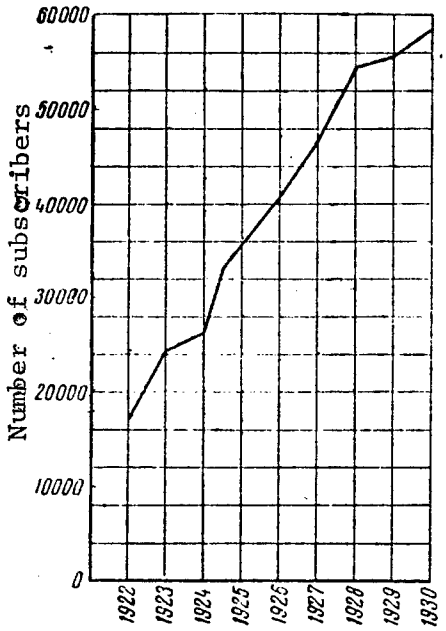

Figure 19. Increase in number of MCTN subscribers between 1922 and 1930

Table 6

Year	Number of coin telephones
1922	10
1923	66
1924	95
1925	180
1926	352
1927	443

3. Regionalization of the MCTN. Startup of the first Moscow regional ATE.

As we mentioned in the previous chapter, by 1917, the total number of subscribers to the Moscow network had increased to 63,000. Thus, the installed capacity of the Central Telephone Exchange and secondary exchanges of the MCTN by this time was almost fully utilized.

Consequently, in 1919-1920, there would have been a "telephone famine" in Moscow. As we know from the course of subsequent historical events, in 1917 instead of a need to expand the telephone exchange, its equipment was significantly damaged during the time the revolutionary units of the Moscow garrison drove the cadets entrenched in the exchange from the building.

After partial restoration of the exchange, the Moscow network found itself with free number capacity allowing the needs for telephone communication of institutions and enterprises, and later of individuals as well, to be satisfied.

But by 1924, all of the technical capacity had once more been totally exhausted and the Moscow network stopped installing new telephones. The "telephone famine" had hit Moscow. True, it did not last long. The overhaul of exchange equipment which occurred in the telephone network allowed the capacity of the central exchange to be increased to 60,000 numbers once more. The MCTN once again began the installation of new telephones and thus eased the situation somewhat.

Nevertheless, the demand for telephone communications in Moscow increased so rapidly that even utilization of the entire capacity of the central exchange and opening of a number of manual secondary exchanges did not suffice to solve the problem of telephone communications in the capital for quite some time. The threat of the "telephone famine" continued to hang over Moscow. Consequently, other, more radical measures had to be taken to develop the Moscow network, by means of its regionalization and automation. This work was begun in the second half of the 1920's.

The problem of development of the Moscow network in its entire volume was first analyzed at an expanded session of the Technical Council of the Peoples Commissariat for the Post and Telegraph on 10 April 1922. At this session, the scale of the required telephone structures was decided, as well as the technical means which would be the determining factor in all future technical policy as concerns problems of development of the largest Soviet networks, particularly the Moscow network.

Somewhat later, in 1924, a special commission was created in the Peoples Commissariat for the Post and Telegraph. Its task included solution of problems concerning the future expected growth of the number of subscribers of the Moscow network up to 1945, the size of the territory served by the network, the presumed location of subscribers over this territory and, finally, the technical directions of development of the Moscow network up to 1945*. After answering all of these questions and providing a comprehensive analysis of the condition of the equipment of the network and the capabilities for its further use, the "1924 Commission" came to two main conclusions. First, the Moscow City Telephone Network should be regionalized, since the expected growth in the number of subscribers would exceed the technical capabilities of the central exchange by many times. Secondly, the newly installed regional exchanges should be automatic, since otherwise the construction of connecting lines would require excessive nonproductive expenditures and would not provide the required quality of servicing of subscribers.

This same commission reached the following additional conclusions: 1) the capacity of each regional Automatic Telephone Exchange [ATE] should be on the order of 10,000 numbers; 2) four regional ATE should be opened first: Zamoskvoretskaya, Tverskaya, Arbatskaya and Sokol'nicheskaya; 3) subsequently, satellite ATE should be opened: in Petrovskiy Park, at Vsekhsvyatskiy, Petrovsko-Pazumovskiy, Bogorodskiy, Cherkizovo and Blagush.

One of the initial versions of development of the MCTN as worked out in 1924 is shown in Figure 20.

In 1925, the recommendations of the "1924 Commission" were approved with some modifications by the Peoples Commissariat for Post and Telegraph, and served as the basis for further development and planning of the MCTN.

On 17 August 1926 at Zamoskvorech'ye, on B. Ordynke Street, the cornerstone was laid for the first public ATE in Moscow (ATE V1) (Figure 21). That same year, somewhat later, construction was begun of the buildings for the other three regional ATE of the first stage of expansion -- the Baumanskaya (ATE Ye1), the Arbatskaya (ATE G1) and the Miusskaya (ATE D1)**.

Beginning in January of 1927, all work on the construction and installation of the first ATE in Moscow was concentrated in a special organization, newly

---

*For more details see the article "The Problem of Development of the Moscow City Telephone Network in the journal "Zhizn' i tekhnika svyazi," No. 4-5, 1925.

**The world's first public ATE was opened in 1892 in Laporte (USA).

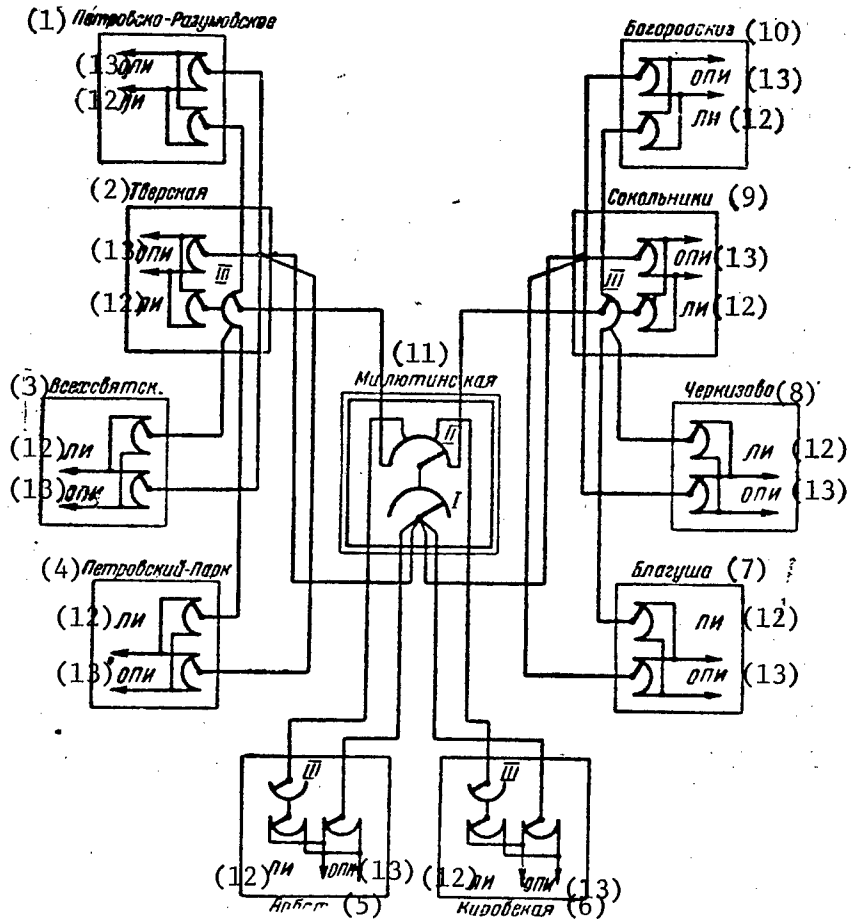

Figure 20. One of the first versions of development of the MCTN, developed in 1924.

Key:

1. Petrovsko-Razumodsk'ye
2. Tverskaya
3. Vsezhsdyatsk
4. Petrovskiy Park
5. Arbat
6. Kirovskaya
7. Blagusha
8. Cherkizovo
9. Sokal'niki
10. Bogorodskiye
11. Milyutinskaya
12. Final selector
13. Line selector

created within the Peoples Commissariat for Post and Telegraph -- the administration of the chief engineer for regionalization of the MCTN (abbreviated "FUR"). The creation of this organization, which supervised all problems of regionalization of the Moscow network, including planning and construction of civil, line and exchange structures, doubtless had a positive influence on the rates of regionalization of the network.

The construction of the building for the Zamoskvorech'ye (now Kirov) ATE was completed in 1927, and on 6 November 1927 the official grand opening of the building was celebrated. Soon after this, construction was completed of the remaining three buildings for the first ATE of the Moscow network, after which installation of the exchange equipment was begun. At the same time, special intermediate (key) equipment was installed at the Central Telephone Exchange to connect the manually served subscribers with the automatic subscribers.

In 1930, the installation of the first two regional ATE and the connecting equipment at the central exchange was fully completed. On 22 October 1930, the Zamoskvorech'ye (now Kirov) ATE (V1) and the connecting equipment at the central exchange went on line, and on 26 October of the same year -- the Baumanskaya ATE (Ye1) began operations.

The opening of the first automatic exchanges was preceded by a great publicity campaign conducted among the subscribers of the MCTN. The administration of the Moscow network published special brochures and posters, in order to instruct the subscribers in the use of the automatic telephone. Verbal instruction, instructions broadcast by radio, etc. were also extensive. All of this work yielded good results. The subscribers of Moscow were ready to use the automatic telephones, and the switching of the subscribers points to automatic exchanges caused no confusion.

4. Broadcasting by telephone line. Participation of the MCTN in the Moscow radio network.

In mid 1926, a group of workers at MCTN, after a number of experiments and the construction of an experimental installation, suggested that the subscriber lines of the MCTN be used for broadcasting purposes. This suggestion was fully approved, and in the first half of 1927, a radio broadcasting installation began to function at the Central Telephone Exchange, designed initially to service 300 to 400 subscribers. It was later replaced by a high power installation.

The radio transmissions could be heard by means of a loudspeaker of high-impedence earphones connected to a special radio jack which was in turn

connected to the telephone set (Figure 22). The radio program was automatically shut off during telephone conversations by subscribers who were listening to the radio.

In order to connect the subscriber's lines to the radio broadcast installation, a special radio bench was installed at the Central Telephone Exchange, as diagrammed in Figure 23. As we can see from Figure 23, the connection was made by means of type RSH plugs. When a subscriber who was listening to the radio called the exchange or when the subscriber was called by any other subscriber of the MCTN, the operator (signal or multiple) inserted one of the plugs of the cord pair into the jack of the subscriber's line, causing the corresponding relay on the radio bench to switch, disconnecting the subscriber's line from the radio broadcast bus. At the end of the telephone conversation, when the plug of the cord pair was removed from the jack of the subscriber's line, the relay at the radio bench switched to the opposite position and the subscriber's line was once more connected to the radio broadcast installation.

The radio transmissions over the telephone wires were quite popular among the people of Moscow. The number of subscribers asking for a radio plug so that they could listen to the radio increased with each passing year.

In 1928, there were 1500 such telephone "radio subscribers," who by then could select any of the programs of the Moscow radio broadcast stations.

Subsequently, when the number of "telephone radio points" reached 3200, it was found that the radio broadcasts greatly influenced the telephone conversations being held on other lines (by induction). For this reason, and also in connection with the automation of the network, it was necessary to discontinue telephone radio service, and in 1930 subscribers desiring to listen to radio broadcasts by wire were switched to a separate radio relay network.

At the same time that broadcasting over telephone lines was organized, the Moscow City Telephone Network began providing radio service to buildings and entire regions. A special telephone line was led into the building, connected to the radio center at the telephone exchange. An amplifier located in the building, supplied the local radio network with audio frequency signals, to which the radio points were connected.

Each building was supplied with one, two or even three programs, depending on the number of amplifiers. Where there was but one amplifier, one of the programs relayed by the radio stations of Moscow could be requested in advance. Special broadcasts were also provided for a given building. The subscribers were given "Bozhko" type loudspeakers.

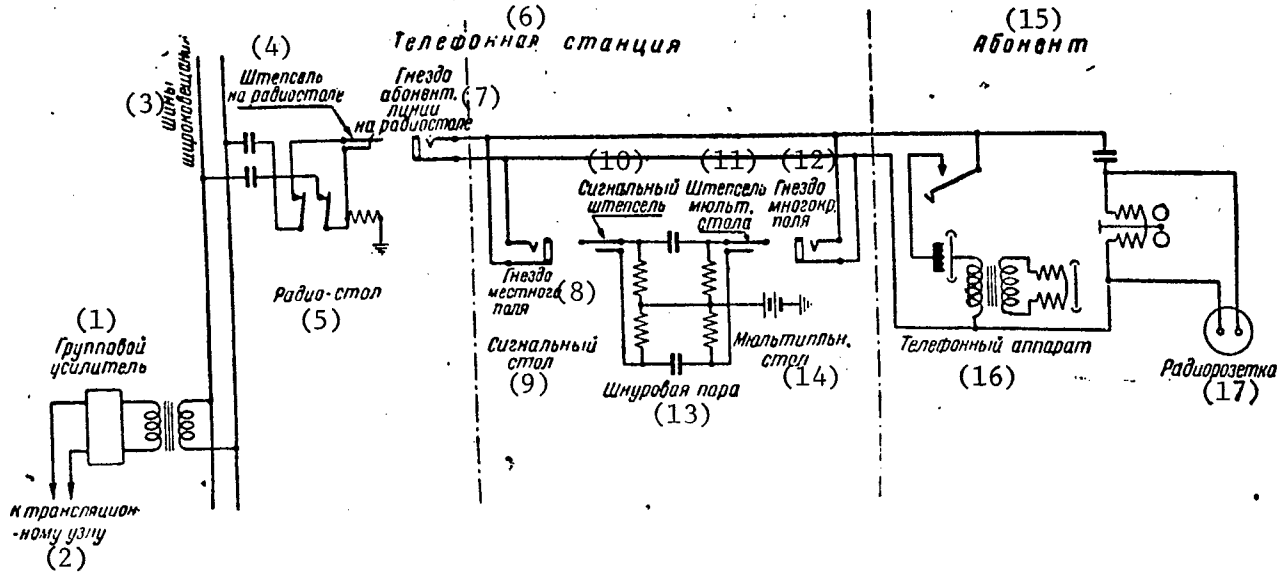

Figure 23. Diagram of radio bench at Central Telephone Exchange

Key:

1. Group amplifier
2. To relay unit
3. Radio broadcast buses
4. Radio bench plug
5. Radio bench
6. Telephone exchange
7. Subscriber's line jack to radio bench
8. Local field jack
9. Signal bench
10. Signal plug
11. Multiple bench plug
12. Multiple field jack
13. Cord pair
14. Multiple bench
15. Subscriber
16. Telephone instrument
17. Radio jack

In order to service the radio network, the MCTN developed a special "broadcast" group, which later became the MCTN radio service.

In 1930, the MCTN was serving some 25,000 radio points and about 250 building amplifiers. A year and a half later, the MCTN radio service was separated from the Moscow telephone network to become an independent enterprise -- the Moscow City Radio Relay Network or MGRS*.

---

*From an article by S. Kryukov "Radio Service for Moscow," in "Vestnik svyazi," No. 12, 1944.

V. 1931-1941. AUTOMATION AND FURTHER DEVELOPMENT OF THE MOSCOW CITY TELEPHONE NETWORK

1. Expansion of exchange equipment, growth of number of subscribers.

Further development of the Moscow network, beginning in 1931, occurred rapidly.

Immediately after the opening of the first two automatic exchanges -- the Kirov (ATE V1) and Bauman (ATE Ye1), the other first stage Moscow ATE went on line: Minusskaya Pervaya (ATE D1), Arbat (ATE G1) and Minusskaya Tret'ya (ATE D3).

In the next few years, installation work was completed and one after the other, automatic exchanges of the second stage of expansion were put in operation: Taganskaya Pervaya (ATE Zh1), later renamed ATE K7, Minusskaya Vtoraya (ATE D2), Arbat Shestaya (ATE G6) and others. The system used at these second-stage exchanges was somewhat modernized. They featured unilateral disconnection. In contrast to the first-stage exchanges, at the second-stage exchanges, relay current distributors (type TIGR and TVGR) were installed in place of the rotary distributors. Register stepping switches (RI) were not used here, and the registers were hard wired with cord pairs.

In parallel with the construction of the regional ATE, the Moscow network undertook partial automation of the Central Manual Exchange. First of all, some of the manual telephones of this exchange were shifted to the newly installed keyless equipment, with which the signal operators, without speaking to the subscribers, connected incoming calls directly to the registers, and each subscriber himself dialed the desired number using the dial on his automatic telephone set. A schematic diagram of the keyless equipment of the Central Telephone Exchange is presented in Figure 24.

After that, manual hall A was dismounted and two new automatic exchanges (ATE K4 and ATE K5) were installed in the same room. Somewhat later, hall C was closed, and installation of the third ATE (ATE K1) was begun. However, the war prevented opening of ATE K1, and its equipment was dismantled in 1941 and transported out of the city.

Since the annual growth of automatic equipment still did not allow complete satisfaction of the massive demands for telephone communications, the Moscow network, in addition to the construction of ATE, continued installation and expansion of a number of manual secondary telephone exchanges (each with a capacity of several hundred numbers), designed to service large

apartment buildings, workers villages and neighborhoods around the capital. These exchanges include the exchange imeni 1905, Sokol exchange, and others. The connecting lines of most of the secondary exchanges were connected on the single-cord connector principle, greatly accelerating servicing of incoming calls.

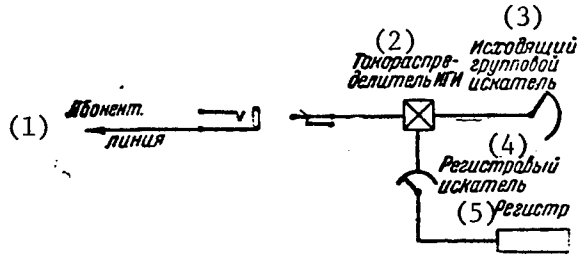

Figure 24. Schematic diagram of keyless Central Exchange equipment

Key:

1. Subscriber line
2. IGI distributor
3. Outgoing stepping switch
4. Register switch
5. Register

The overall picture of development of the Moscow City Telephone Network during the 1930's can be seen from Table 7.

Table 7

Year	Newly opened ATE and secondary exchanges	Enlarged ATE and exchanges
1931	ATE D1, ATE G1	--
1932	--	ATE V1, ATE Ye1
1933	ATE Zh1 (K7), ATE D3, exchange imeni 1905	--
1934	ATE Zh3	--
1935	Keyless hall of Central Exchange, Alekseyevo exchange	--
1936	ATE D2, ATE G6	--
1937	ATE V2, ATE Zh2, ATE K4	--

Table 7 (continued)

Year	Newly opened ATE and secondary exchanges	Enlarged ATE and exchanges
1938	ATE K5, exchange imeni Schmidt, imeni Karl Marx and "Food Industry" exchange	--
1939	ATE Zh4, ATE I1, VSKHV (All-Union Agricultural Exhibition) exchange	ATE G6
1940	ATE Ye2	ATE V2 and Usachevskaya, imeni Schmidt and imeni 1905 exchanges
1941	Sokol exchange	--

Furthermore, in 1941 construction was completed of ATE K8 (in building G on Gor'kiy Street) and ATE K1 (in the Central Exchange Building), though the war prevented these exchanges from being put in operation.

Along with the installation and opening of the new, more powerful and technically improved exchange equipment, some of the manual exchanges in the network, no longer needed, were dismantled.

Thus, after ATE V1 was put in operation, Zamoskvorech'ye manual exchange, with a capacity of 1000 numbers, was closed. After ATE Ye1 was opened, Blagush exchange (200 numbers), Cherkizovo exchange (200 numbers) and Bogorodskoye exchange (100 numbers) were closed. After ATE D1 was opened, Petrovskiy Park exchange (200 numbers) was closed. After ATE Zh2 was opened, Dangauerovskaya exchange (200 numbers) was closed. Finally, after Sokol exchange was opened, Vsekhsvyatskoye exchange (380 numbers) was closed.

Table 8

January 1st	Total subscribers	Connected to ATE
1931	60,146	4,798
1932	72,255	24,984
1933	83,299	32,831
1934	89,975	41,808
1935	97,368	47,543
1936	103,266	50,531

Table 8 (continued)

January 1st	Total subscribers	Connected to ATE
1937	114,091	59,460
1938	123,699	78,819
1939	131,167	94,793
1940	140,030	101,257
1940 on 1 October	144,921	105,482

In addition to the increase in the installed capacity of exchange equipment of the Moscow network, from year to year the number of its subscribers increased significantly (Table 8).

The dynamics of the growth of the number of subscribers of the MCTN during this period can be seen from the curves of Figure 25. These curves and Table 9 show that over the ten year period (1930-1940), the number of subscribers of the MCTN more than doubled.

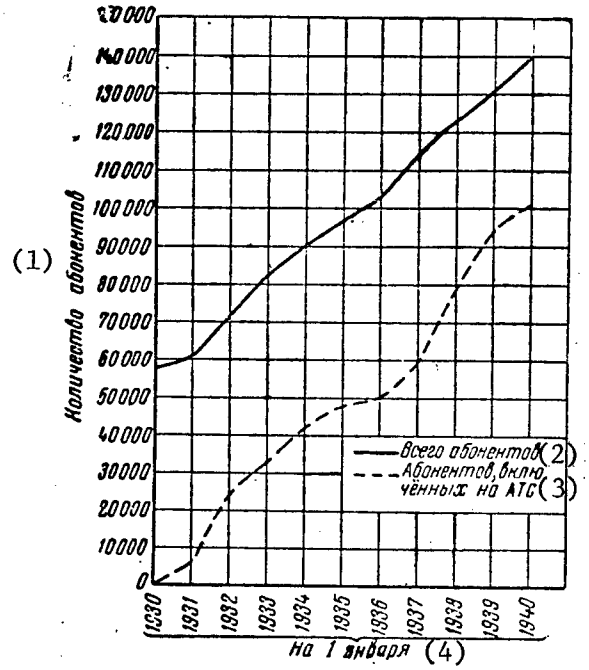

Figure 25. Growth in the number of subscribers of the MCTN from 1931 through 1940

Key: 1. Number of subscribers
2. Total subscribers
3. ATE subscribers
4. On 1 January of

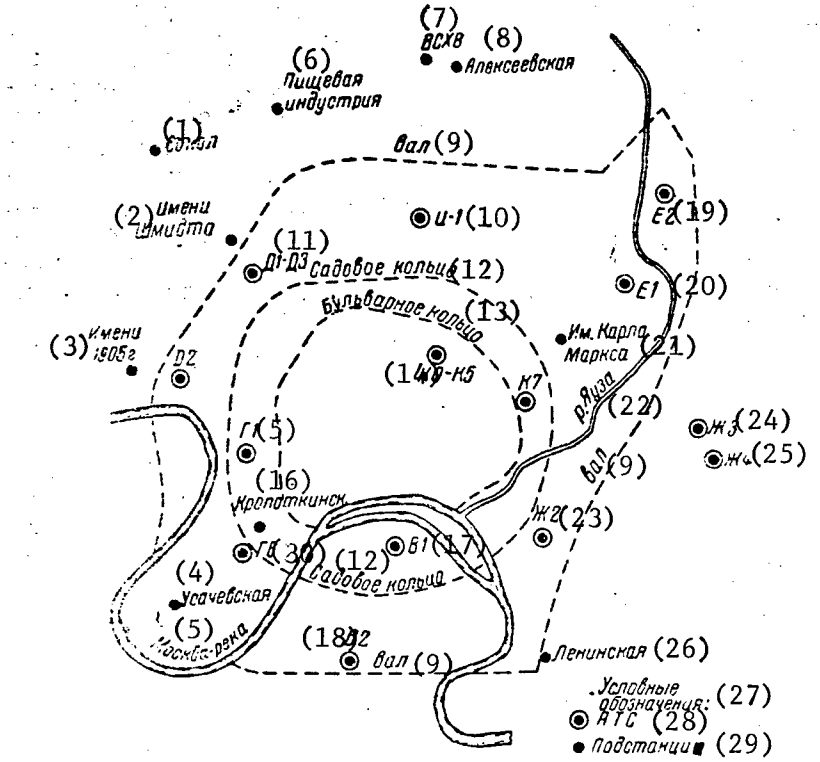

Figure 26. Placement of ATE and MCTN secondary exchanges over the territory of the city at the beginning of 1941

Key:

1. Sokol
2. imeni Schmidt
3. imeni 1905
4. Usachevskaya
5. Moscow River
6. Lishchevaya industriya
7. VSKHV
8. Alekseyevskaya
9. Val
10. Ts-1
11. D1-D3
12. Sadovoye Kol'tso
13. Vul'barnoye Kol'tso
14. K0-K5
15. G1
16. Kropdtkinsk
17. V1
18. V2
19. Ye2
20. Ye1
21. imeni Karl Marx
22. Yauza River
23. Zh2
24. Zh3
25. Zh4
26. Leninskaya
27. Uspovnyye oboznacheniya:
28. ATE
29. Podstantsi
30. G6

By the beginning of the Great Patriotic War, the exchange equipment of the Moscow network in the city itself (not including the secondary exchanges of the suburban telephone system) could be characterized by the data presented in Table 9.

The placement of these ATE and secondary exchanges over the area of the city is shown by Figure 26.

Among the many improvements in the operation of the exchange equipment, we should note one technical innovation developed by Soviet engineers. For the convenience of the great mass of workers, talking clocks were installed at the Central Telephone Exchange late in 1937. They were a great success with the residents of the capital. Each day, tens of thousands of Moscovites checked their watches or simply learned the time of day from this original device.

Table 9

Items	Number	Installed capacity (numbers)
Manual exchange	1	32,200
Public ATE	16	120,000
Public manual secondary exchanges	11	7,200
Total	28	159,400

2. Reconstruction of line structures.

By the mid 30's, in spite of the construction of several automatic exchanges completed by that time, a large portion of the line structures of the Moscow network, outside Sadovoye Kol'tso, remained in extremely primitive condition.

There were few buildings equipped with cables. The network included large numbers of 30 x 2, 50 x 2 and 100 x 2 iron cable towers and 28 x 2, 56 x 2 and 100 x 2 cable poles. Each of these large cable structures served several blocks of the city. Therefore, long pole lines with large numbers of wires spread outward from the cable towers and poles.

This configuration of the network was tolerable until the opening of the ATE, when the telephone density outside Sadovoye Kol'tso was comparatively

low. But when in the 1930's, after the first regional ATE were put in operation, the installation of large numbers of new telephones began all over the city, the existing line structures could no longer satisfy the elementary requirements of normal development and operation of the Moscow network. The installation of new telephones became difficult under these conditions, since each installation required much labor-consuming work. The presence of long lines of towers, heavily loaded with wires, resulted in frequent damage to the network. Repair of these long, multiple-wire lines of towers became quite difficult.

At the same time, the Moscow Party Committee and Moscow Soviet placed a requirement on the network of the capital -- significant improvement of the qualitative indicators and, particularly, significant reduction in the rate of equipment failures.

All of these factors forced the administration of the Moscow City Telephone Network, together with the Moscow city organizations, to raise the question of the need for reconstruction of the obsolete line structures of the network. The Peoples Commissariat for Communications agreed with these conclusions and in 1934, the administration of the Moscow telephone network, after receiving the necessary funds and materials, began the work of reconstruction. The Moscow council was vitally interested in the reconstruction and rendered concrete aid to the telephone network.

The reconstruction of line structures consisted in elimination of all high capacity cable towers and poles and replacement of each of these structures with several 10 x 2 cable poles. These poles were installed so that each 10 x 2 pole served the telephones within the limits of one single block. At the same time, cables were installed in a large number of buildings.

Samples of the largest cable structures of the MCTN which were torn down during the time of reconstruction of the line structures in 1934 are shown in Figures 27, 28 and 29.

The volume of reconstruction work involved was very great. To cope with this work, it became necessary to attract a large number of workers with various occupational specialties. Furthermore, voluntary Sunday work was organized on a broad scale by the unions. Hundreds of orderers, sector installers, operators and administrative workers worked selflessly on the line on their days off. They dug trenches, laid pipe, stretched cables and installed lines. This cooperative hard work by the Moscow telephone network team allowed the task set before them to be performed successfully, completing the reconstruction of the line structures in a very short period of time: all of the reconstruction work was performed and completed during 1934.

The results of the reconstruction of the line system were felt immediately. The length of pole lines and open wires was greatly reduced. More normal conditions were created for further development of the network. The number of line faults was greatly reduced. The work of the operating personnel was made much easier.

3. Beginning of the Stakhanov Movement. Its subsequent forms in the MCTN.

In 1935, soon after the world became aware of the results of the work of the Donets Basin miner Aleksey Stakhanov, the Moscow network, like other enterprises in the Soviet nation, organized the movement of his followers -- masters of high productivity of labor. Socialist competition therefore reached a new, higher stage in its development. The best workers in the network -- the leaders of production -- now rejected the old methods of work of their grandfathers and bravely, like Stakhanov, began utilizing new, better, improved methods of labor in their areas, yielding a high effect in production. Gradually, the Stakhanov Movement, begun by a few individual workers in the network, developed in all shops and services of the Moscow network, became a mass movement. The experience of the best Stakhanovites was studied and imitated by the others. Increasing numbers of groups of workers became Stakhanovites. Soon there were hundreds of them.

One of the best Stakhanovites among the sector supervisors was comrade Zav'yalov, I. M. (Figure 30).

The significance of the Stakhanov Movement for the Moscow network is difficult to overestimate. It had a decisive influence on the overall improvement of the operation of the network. It is thanks to the Stakhanov Movement that the quality indicators of the MCTS began to rise sharply and the network became one of the leading enterprises in the country.

Later, in 1939, a new phase of the Stakhanov Movement arose in the Moscow telephone network -- the movement of thousand-machine operators. On the initiative of comrade Krylov, a technician at ATE I1, sector supervisor comrade Petrov and a few others, the best workers of the network, after deep study of their area of operations and mastery of Stakhanov's methods of work, proposed to make the transition to multiple-machine operation. The sector supervisors took it upon themselves to service large installation areas of 1500-2000 subscribers (from which the "thousand" in their name was taken); shift ATE technicians proposed to perform nighttime testing not only of the exchange equipment assigned to them, but also of the equipment of the entire ATE, etc.

This initiative of the workers was well-founded and realistic. It was based on precise calculation. The workers considered not only their own strength,

knowledge and experience, but also technical innovations, efficiency suggestions and organizational changes. Changes in the dialogue of the operators, mechanization and automation of the most labor-consuming test operations of ATE equipment and much more -- all of this saved valuable minutes of working time and allowed the operating personnel to increase the productivity of labor greatly and, consequently, take upon themselves additional work. In any case, when the workers proposed to take on multiple-machine operation and their proposals were accepted, they produced excellent results. The introduction of multiple-machine work was found to be a realistic and possible matter. It liberated a portion of the work force, which was then used in other areas of work and, which was of particular value, greatly improved the quality indicators of the operation of the entire Moscow network.

Later, early in 1941, yet another form of the Stakhanov Movement arose in the Moscow network -- the struggle for zero defects. The sector supervisors who struggled for faultless operation of telephones and achieved the record of zero faults in their sectors were called "zero men" [nuleviki -- tr.]. At first, these "zeros" were rare phenomena. They were achieved only on certain individual days. Then, as a result of the hard work of the supervisors, they became ever more frequent. Finally, some supervisors managed to avoid any faults in their own sectors 10-12 or even 15 days per month. This was a record which had never been seen or heard of over the entire time of existence of the Moscow network.

After the Great Patriotic War, the experience of the work of the thousand-machine operator Stakhanovites and the zero men was widely used in the Matrosov Movement which began in the MCTN.

4. Decentralization of the telephone network. Formation of telephone centers.

In connection with the introduction of the first regional automatic exchanges and the increase in the volume of line structures, in August of 1932, the Moscow network was reorganized. Administration of the telephone system of the city of Moscow was decentralized. In place of individual line regions and telephone exchanges subordinate to the corresponding branch sections of the administration of the network, the MCTN administration created five telephone centers: the Central, Zamoskvoreche (later Kirov), Miusskiy, Arbat and Bauman centers. These centers were independent economic units, with their own budgets. Each unit was headed by a chief and chief engineer, subordinate to the administration of the network. The functions of these centers included operation, repair and development of all types of telephone structures located in the territory of the city which they served.

Later, as the Taganskaya ATE Zh1 (K7) and Dzerzhinskaya ATE I1 were opened, the Taganskiy and Dzerzhinskiy centers were also created, and the suburban telephone system was combined into the newly organized Suburban Telephone Center. Furthermore, in order to undertake large scale operations, the MCTN adminstrative system created a repair and construction office as an independent enterprise.

This structure continued until the end of 1940. In January of 1941, the telephone centers were enlarged. The Miusskiy and Dzerzhinskiy centers were combined into the new, larger Miusskiy center. The Kirov and Arbat centers were combined into the new, larger Kirov center. The Tagan and Bauman centers were combined into the new, larger Tagan center. This enlargement of centers allowed a significant reduction of the administrative apparatus at the centers and liberated a portion of the area in the service rooms, which could then be used for other purposes.

VI. 1941-1945. OPERATION OF THE MOSCOW CITY TELEPHONE NETWORK DURING THE GREAT PATRIOTIC WAR

1. The first days of the war. Preparation of the exchanges for air raids.

On Sunday morning 22 June 1941, the Chief of the Administration of the Moscow City Telephone Network ordered all administrative workers and many of the line workers of the network to come to work and await special orders. The people assembled in an organized manner. The workers called were soon in their places. The beginning of the war was still not public knowledge.

However, soon everything was made clear. At 12:15, the voice of V. M. Molotov was heard on the radio, announcing the treacherous attack of fascist Germany upon the Soviet Union, ending with the famous words, "We are in the right. The enemy will be destroyed. Victory will be ours." With these words began the war status and 23 June was announced as the first day of mobilization.

The war had begun . . .

On this day, the load on the Moscow ATE broke all records. In spite of all steps taken, at all exchanges the shortage of lines and instruments was acutely felt.

In the light of developing events, the Moscow City Telephone Network immediately began the installation of a large number of telephones intended to serve the needs of defense.

At the same time, general restructuring of operations began, considering the requirements of wartime. At centers and telephone exchanges, continuous round-the-clock duty was taken up by subunits of all commands of the Moscow Air Defense system. Of the remaining worker specialists not a part of the air defense, a separate communications company was created as a part of air defense headquarters of the city. The company was commanded by the Chief of Administration of the MCTN. The purpose of this company was to eliminate the damage caused by air raids.

At the telephone exchanges, blackout and light shielding operations were begun. A number of additional fire prevention measures were taken.

In order to observe the overall blackout of the city, all telephone centers, on instructions from the administration of the network, removed the electric call lights from the police telephones on the streets and replaced the white bulbs in outdoor telephone booths with blue bulbs.

In addition to this general preparation for air raids, a number of specific technical steps were taken by the telephone network.

During the first month of the war, the number of workers in the network was significantly decreased. At first, some of the workers were mobilized into the active army and assigned to individual communications repair battalions. Somewhat later, many workers, answering the call of the Party and the government, volunteered for the Peoples Volunteer Corps. Finally, in connection with the general evacuation of women with children from Moscow, many of the female workers left the network. However, this shortage of personnel in the telephone network did not disrupt its normal operations. Those who remained worked even harder.

The call by comrade Stalin to reinforce the rear of the Red Army was answered by massive manifestations of labor heroism. The workers were inspired to new feats of labor. The difficulties of wartime caused no one to dispair. All remembered the historic words of the great Stalin, "Our forces are innumerable. Our enemy will soon see this for himself." (J. Stalin)

The telephone network of the capital began to operate still more precisely than in peacetime.

2. The first air raid on Moscow. Damage suffered by the Moscow network in later air raids.

During the night between 21 and 22 July 1941, at 22:10, air raid sirens were heard for the first time on the streets of Moscow. The alarm signal was passed through the city. The Fascist Air Force made its first air raid on the capital. Over 200 German aircraft attempted a massive raid on Moscow. However, the defense detachments of our air force prevented the main forces of German aircraft from reaching Moscow. Only a few individual enemy aircraft penetrated the defense barrier and reached the capital. They dropped their incendiary bombs and a large number of high explosive bombs in a disordered way over the western and northwestern regions of the capital and were driven off by antiaircraft artillery fire.

During this attack, the Moscow telephone network received its first damage. It was not great. A cable trunk terminal on Leningrad Highway, serving the central headquarters of the Civil Air Fleet (GVF) was put out of action; in the area of Shelpikhi, 14 poles of a telephone line were burned. Three incendiary bombs landed in the yard at ATE D2. An explosive wave broke the glass windows of the secondary exchange imeni 1905.

The damage to the telephone network resulting from this first bombardment was rapidly repaired, communications with the central headquarters of GVF,

where the headquarters of one of the Barrage Balloon regiments was located, being restored even before the end of the attack. The model labor of the communications workers who restored communications to this regiment was remarked upon in the following letter, sent by the Regimental Commander to the Chief of the Miusskiy telephone center (letter No. 148):

> "During the first Fascist air raid on the capital of our fatherland, Moscow, during the night between 21 and 22 July 1941, bombs disrupted telephone communications of the regiment and the central headquarters of GVF. The Miusskiy telephone center of the city of Moscow sent repairment comrades Matveyev, D. V. and Balashov, B. S. to repair the damage; these men restored telephone communications to the regiment very quickly as the bombardment and artillery fire continued. Risking their lives, comrades Matveyev and Balashov selflessly worked to restore telephone communications in order to strike a crushing blow to the Fascist cannibals. At the present time, the telephone communications of the regiment and the central headquarters of the Civil Air Fleet are operating without interruption."

Later, there were many more Fascist Air Force air raids on Moscow. However, the Germans never succeeded in undertaking massive air raids. This was prevented by the well organized air defense of the capital. If a few individual enemy aircraft did succeed in reaching the Moscow region, the effects of our night fighters, the intensive fire of our antiaircraft artillery, the work of our searchlight teams, the large numbers of barrage balloons, all of this forced the Fascist pilots to give up the idea of well targeted bombing and simply drop their bombs where they could. This explains the comparatively slight damage to the Moscow telephone network which resulted from the German air raids.

However, there were several cases in which the bombs, dropped at random, still destroyed telephone structures. Particularly serious damage was caused by the bombardment overnight between 11 and 12 August 1941. During this night, the telephone network was damaged severely in several places simultaneously; among other things, in the central portion of the city at one intersection at 19-aperture telephone cable pipe with a large number of active cables was destroyed, and at another point (also in the center of the city) a large manhole containing a 10-aperture unit carrying high capacity trunk lines was destroyed.

The best teams of workers were thrown into action to repair the damage. The repair operations continued around the clock, day and night. They did not stop during air raids and the intensive fire of our antiaircraft

artillery; in order to avoid breaking the blackout, the workers were covered with canvass and sheets of plywood and continued their work amid the alarm and the explosions of the bombs.

Due to the hard, Stakhanovite labor of the workers of these repair brigades, the intelligent organization of work and the initiative of the engineers and technicians leading the brigades, in spite of the difficulty of the repair work, all damage caused by the Fascist aviation was rapidly and capably eliminated.

We must comment that during their daily work under wartime conditions, with enemy air raids, the workers of the Moscow City Telephone Network showed themselves to be true patriots of our great fatherland and gave many excellent examples of bravery and heroism.

For example, on the night of 28-29 July 1941, technician comrade Novikov, V. I. and supervisor comrade Mos'kin, K. K., during intensive bombardment and antiaircraft artillery fire selflessly, risking their lives, restored communications damaged by bomb fragments near one of the highways outside the city. In spite of the very difficult conditions of labor, at night, in darkness, with shell fragments whistling by and enemy bombs exploding, these comrades achieved their mission -- the wires along the line of poles which had been broken were repaired and communications restored in a short time.

Or another case. A special order of the Chief of Administration of the MCTN announced the gratitude of the people to ATE V2 workers comrades Rybakov, Khudova, Kuleshov, Kolbasina and Panferov, on duty at the exchange on the night of 27-28 July 1941. While they were on duty, the Fascist aggressors bombed the region where ATE V2 was located. Several heavy high explosive bombs landed near the exchange one after another. The shock waves broke every window at the exchange. One window frame flew into the automatic equipment room. The terrific noise of the explosions shook the air. It seemed that the next bomb would surely strike the building of the exchange directly. Nevertheless, the workers of the exchange bravely and coolly continued performing their duty, maintaining normal communications with the capital at this serious and responsible moment. None of them moved; they all stayed at their posts.

We must not forget the brave feat of exchange technician comrade Putankina of one of the Moscow automatic telephone exchanges. Two kilometers from the exchange, an emergency fault arose in the branch exchange of one of institutions of the city. This occurred at night, during an air alert. The young, inexperienced workers at the branch exchange tried hard to repair the equipment, but could do nothing. They called comrade Putankina, requesting help.

No thought of danger even entered the head of this brave communications worker. Without hesitating, she ventured out into the night. Thanks to her help, the fault was rapidly eliminated.

Line engineer comrade Osipov, the head of one of the repair teams, also showed exceptional self control. Several incendiary bombs were dropped on the building where he was working. Comrade Osipov rapidly took command. With the help of the other workers, all of the bombs were disarmed in time*.

We could give many such examples of selfless labor. They all indicate the bravery of the Soviet man, his limitless dedication to his fatherland, people and Party.

The intensive and heroic labor of the workers of the Moscow City Telephone Network during the years of the Great Patriotic War with the German Fascist invaders, such difficult years for our country, have been repeatedly reported in the press. This was reflected also in the reports of the Soviet Information Bureau. Thus, in the morning report of the Soviet Information Bureau of 20 August 1941, the following lines were recorded:

> "Chief engineer of the repair office of the Moscow City Telephone Network, comrade Postinkov, has performed work in but a few days which would have required months before the war."

This great labor achievement of this Soviet engineer was soon reported in more detail in a Moscow newspaper*. Here is what happened:

> At 4:00 a.m., the chief engineer of a repair office of the Administration of the telephone network, comrade Postinkov, was urgently called to the operational headquarters.
>
> "Sergey Ivanovich! We must establish communications with point N."
>
> The project at hand was rather complex and involved a great deal of labor.
>
> "The work should be completed in 48 hours."
>
> Comrade Postinkov was accustomed to following orders rapidly and precisely. But even he, an experienced communications worker, was somewhat taken aback by the time limit. According to the most modest peactime norms, the work would require

*From the newspaper "Vechernyaya Moskva" of 6 August 1941.

about a month. But they wanted it in 48 hours! Without plans, without estimates.

"It's an emergency assignment," emphasized the chief of staff.

The chief engineer replied laconically, "It will be done. . ."

Together with the chief engineer, comrade Savenkova and other specialists immediately thought all of the necessary steps carefully, gathered their forces, made up a schedule.

For the next two days, comrades Postnikov and Savenkova, work superintendent Makhotin, technician Bogachev, team chief of installers Sorokin, installer Shchukina, technician Zimin, solderers Sayfutdinov, Sadykov and other workers never closed their eyes. Problems which would earlier have taken days to solve were now solved in minutes.

After 48 hours, a call came in from point N to the headquarters: "Communications established . . ."

In two cases, the air raids by the Fascist Air Force resulted in the death of telephone workers.

On the night of 5-6 August 1941, a heavy high explosive bomb fell in the immediate vicinity of the building of ATE V1. There was a terrible explosion. A wall section of 16 square meters was knocked down in the administrative wing of the exchange. The shock wave broke all the windows, ripped out many of the iron frames, tore down partitions within the building and crushed one section of the bomb shelter. The equipment in the exchange was not significantly damaged, but the explosion of this bomb caused human losses: several workers were killed and several others wounded.

Another case occurred at the Central Telephone Center. On the night of 29-30 March 1942, enemy aircraft dropped three high explosive bombs on Markhlevskiy Street. One of these bombs struck No. 1 Markhlevskiy Street, two others fell into the street near the telephone exchange. No. 3, which contained the line services of the Center, was severely damaged: the shock wave broke all the windows, tore out the window frames, knocked down the doors. One of the workers of the Central Telephone Center employed in this building was killed by a bomb fragment, and several persons located in the Telephone Exchange Building were wounded. The Telephone Exchange Building itself also suffered. No a single piece of glass was left whole on the street side of this giant building. However, the technical equipment of the exchange was totally undamaged.

3. October-December 1941. Assisting in the defense of the capital.

In October-November of 1941, the situation on the western front became more difficult. At the cost of tremendous losses of manpower and equipment, the Fascist hordes succeeded in breaking through to the distant outreaches of Moscow. The capital of the Soviet Union was now directly threatened. The State Committee for Defense declared a State of Siege. On the order of the Soviet and Party organizations of the city of Moscow, large groups of workers were sent to construct the first lines of defense. A great line of fortifications arose around Moscow. The workers of the Moscow telephone network also took part in this labor. Here, as in their own production work, they showed themselves to be true patriots of the fatherland. With picks, shovels and axes in their hands, together with their fellow workers, under the leadership of the specialists, they erected bunkers and pillboxes, dug antitank trenches, set up concrete barriers and prepared the terrain for mining.

Somewhat later, the workers of the Moscow network also took part in the construction of fortifications on the close approaches to the capital and in Moscow itself. In the groves and forests around Moscow, traps and barriers were set up. Barricades were built on the streets of the capital. Anti-tank "hedgehogs" were put in place.

The hard and selfless labor of the Moscow telephone workers in fortifying their capital and the approaches to it was highly rated. The most outstanding (supervisor comrade Galanov and others) were given government awards.

The central shops of the MCTN also greatly aided the soldiers at the front. Beginning in the fall of 1941, and throughout the war, these shops regularly fulfilled defense orders for the manufacture of ammunition. The workers of the central shops performed this honorable work in a model manner. The orders were filled on time or early. The quality of the ammunition produced was faultless.

However, the shops did not limit themselves to filling military orders for the needs of the front. Under the leadership of engineers comrades Vasil'yev, Vlasov and Korobov, a new, original type of field telephone apparatus with a piezoelectric earpiece was developed. The designers of the apparatus called it the PF-1 [for the Russian words meaning "help the front" -- tr.]. After an experimental model was produced, shown to be of high quality and stability, the team at the central shops rapidly undertook manufacture of PF-1 telephone apparatus and went into serious production. The end product was sent to the western front.

In addition to direct participation in the construction of the lines of defense and direct assistance to the front, the workers of the Moscow network worked hard during those severe days to provide telephone communications for the combined units and units of the Red Army defending the capital of our fatherland. Bunkers and pillboxes of the defense line were provided with telephone service, communications were assured for command points of combined units and units stationed to defend the close approaches, cable terminals were constructed for the western command points, located in Moscow deep underground.

Since telephone communications in those days had to be exceptionally precise and the need frequently arose to change the routing of lines and to make various new connections, etc. in short order, special dispatchers groups were set up under the chief engineers at the telephone centers, and assigned exclusively the task of servicing the military and government communications lines. Furthermore, the best workers of the telephone network were assigned to work with the headquarters of the large combined arms units, so as to observe the operation of the communications network and meet the requirements of the headquarters staffs for communications.

As the front lines approached Moscow and the Fascist Air Force continued to raid Moscow in the fall of 1941 the Moscow City Telephone Network, on orders of the Peoples Commissariat for Communications, began partial dismantling of the exchange equipment. The equipment was removed, carefully packed, loaded into railroad cars and shipped away to the eastern regions of the country, beyond the reach of the enemy aircraft.

We should note that this dismantling was done under exceptionally difficult conditions. The workers of the network had no practical experience in this work. The volume of work was extremely great. There were not enough hands. Therefore, each person worked 12 to 15 hours per day. Great difficulties were encountered in finding sufficient packaging materials and containers. But nevertheless, the communications workers of Moscow performed their responsible assignments with honor. No one was disturbed by the difficulties, but rather simply increased their efforts. The selfless labor of people, working hard, not counting the hours, assured that all of the dismantling work was finished in the time allotted.

As the exchange equipment was removed, part of the operating telephones were switched to other sections of the exchanges or, over the cables of connecting lines, to neighboring ATE. The remaining telephones were removed.

4. Reconstruction of the Central Telephone Exchange.

At the beginning of the war, the central exchange, due to various modifications made in the prewar period, was a complicated complex of exchange equipment, located in several halls and consisting essentially of several individual, independent telephone exchanges. Each exchange differed from the other exchanges not only in its plan, but also in the methods used to service subscribers. In particular, at the central exchange (Central Telephone Center), there was the following equipment:

1) ATE K4 and ATE K5. The subscribers of these exchanges had dial telephones and were serviced by the semiautomatic system;

2) A keyless hall. The subscribers of the keyless hall had telephone sets with dials. When a call came in, a signal operator in the keyless hall manually, without speaking to the subscriber, connected him to the intermediate connection equipment, after which the subscriber himself dialed the desired number;

3) Hall B. The subscribers of hall B had telephones without dials. When a call came in, the signal operator in hall B connected the calling subscriber to one of the free multiple operators in the hall. The multiple operator, after asking the subscriber what number he desired, depending on the number which was desired, either connected him to a manual subscriber or, if connection to a subscriber of an ATE was desired, transmitted the call to the key hall, where a third operator once more asked the subscriber what number was desired and dialed the required number for him;

4) Hall D. Subscribers of this hall also had telephones with dials. When a call arrived at the exchange, the subscriber was connected by means of a 25 contact switch to a free multiple operator in hall D, who, after speaking with the subscriber, either connected him with a manual subscriber or transmitted the call to the key hall;

5) The key hall for connection of subscribers of hall B and hall D to ATE subscribers;

6) The intermediate connecting equipment, servicing incoming messages from all Moscow ATE to manual subscribers of the central exchange.

This brief list of the equipment in operation at the Central Telephone Center demonstrates that, in spite of the automation carried out over the Moscow telephone network during the preceding decade, at the central exchange a signficant number of subscribers were still serviced by the manual system, with as many as three telephone operators (signal, multiple and key operators) taking part in the servicing of a single call. Furthermore, the differences in types of circuits and principles of servicing of calls greatly complicated the work of the central exchange. The exchange therefore needed reconstruction.

Reconstruction of the central exchange was begun during the war -- during the second half of 1941. The following situation greatly facilitated the reconstruction operations. The two manual halls mentioned earlier -- halls B and D -- were located in the upper stories of the building of the central exchange. With the Fascist air raids occurring over Moscow in 1941, this represented a threat both to the equipment in these halls and to the workers employed there. Suffice it to say that hall B was covered by nothing more than a glass roof (the hall was illuminated by daylight from above) and any bomb fragment or shell, penetrating the glass, could cause a breakdown or injury to the people working in hall B. To prevent this, halls B and D had to be closed as rapidly as possible, that is the reconstruction of the central station was a necessity.

However, the reconstruction operations included not only closing and dismantling of halls B and D, but also creation at the central exchange of a special switching center for incoming messages with subsequent conversion of a number of the largest institutional ATE to the semi-automatic communications system with the rest of the city.

The job of reconstructing the central exchange was broken down into two individual stages.

The first stage of operations, beginning early in 1942 and continuing through the hardest days for Moscow, consisted in general of the following operations:

1) The multiple benches of hall D were disconnected, and the plan of the hall was changed so that 25 contact switches were used to connect the subscribers of this hall directly to free lines leading to the key hall;

2) The multiple benches of hall B were also eliminated, but the distributing benches still remained and the signal operators were still used to connect subscribers who called the exchange directly to free lines leading to the key hall;

3) In the key hall, it then became possible to connect a calling subscriber to any subscriber of the network.

Thus, after completion of the first stage of reconstruction, hall B continued to function, though with less equipment and with fewer operators.

After the completion of the first stage of reconstruction work, the large multiple field of the Central Manual Exchange, with 60,000 jacks each 3.5 mm in diameter was no longer necessary and was dismantled.

In 1942, the second stage of reconstruction of the MCTN was begun. By the beginning of this year, the number of subscribers served by the central

exchange, in connection with the evacuation of large numbers of institutions and enterprises from Moscow, had been greatly reduced. ATE K4 and ATE K5, the keyless hall and hall D had extensive free number capacity. It was thus possible to switch all subscribers from hall B to these exchanges, and hall B was then fully closed and dismantled. As a result of this, the total installed capacity of the central exchange was somewhat reduced.

Also, the closing of hall B increased the capacity of group K2 by 10,000 numbers and allowed an incoming message switching center to be created.

Upon completion of this reconstruction work, only the following equipment remained at the Central Telephone Center:

1) ATE K4 and ATE K5;
2) The keyless hall;
3) The key hall serving the former subscribers of hall D;
4) The intermediate connecting equipment, serving incoming messages for subscribers connected to the key hall and the keyless hall;
5) The incoming messages switching center.

The reconstruction performed achieved significant results. Closing of halls B and D not only greatly simplified and improved servicing of subscribers of the central exchange, but also allowed a great reduction in the number of telephone operators required, the people no longer needed being used for other work areas. At the same time, the creation of the switching unit for incoming messages made it possible to provide semiautomatic communications with the city for a number of satellites, including a large number of large branch automatic exchanges of the system with machine drive. The switchboards to service incoming messages at these ATE were eliminated, and local subscribers were given 6-digit numbers with the index K2, while subscribers within the satellite systems as before retained their 4-digit numbers.

The work on reconstruction of the Central Telephone Exchange was performed by workers of the Moscow network together with one of the communication battalions. Due to the particular urgency of this reconstruction, planning was performed in parallel with the work. In spite of the difficulties of wartime, as well as the great volume and complexity of the reconstruction work, the team of repair workers completed the reconstruction, performing high quality work in a short period of time.

The government rated the work done highly. Engineers I. V. Lobov, A. M. Rezvyakov, M. V. Gel'fand and V. A. Abene, leading both the planning and actual operations, were awarded the Stalin Prize. A number of workers who participated in the reconstruction were given various orders and medals.

5. Operation of the telephone network in 1942-1945. Construction of new exchanges. Reinstallation of the dismantled equipment.

On 6 December 1941, the forces of the western front, after engaging the enemy in bloody battles, went over into the assault. Under the powerful attacks of units of the Red Army, the German units began to retreat from Moscow. The front line moved further and further to the west. The Fascist air raids became less frequent.

The threat which had hung over Moscow was past! . . .

Due to the improved situation on the front, life in the capital began to follow a more normal course. The Moscow City Telephone Network also began working more rhythmically. Beginning in the spring of 1942, the work, interrupted in 1941, on repair of station and line structures was resumed (one of the repaired cable kiosks is shown in Figure 31). The struggle was begun to improve all quality indicators. The installation of telephones in apartments began once more. The network of pay telephones was expanded.

Along with other leading telephone enterprises, the Moscow City Telephone Network took active part in the All-Union Socialist Competition of City Telephone Networks which was held in mid 1942. Many times, individual centers of the Moscow network emerged victorious in the All-Union Competition and received the traveling red banner of the VTSSPS and Peoples Commissariat for Communications for outstanding work. Thus, for example, based on the results of the work, the traveling banner was awarded: in July and August of 1942 to the Central Telephone Center of the MCTN, in April and May of 1943 to the Arbat Center of the MCTN, in June and July of 1943 -- once more to the Central MCTN Center.

Now this traveling red banner, which was the prize for which teams of workers of the best city telephone networks of the Soviet Union competed during the years of the war, is located permanently at the Central Telephone Center of the Moscow network. The joyful news that the banner was to be permanently awarded to the Central Telephone Center was announced on 20 April 1946 when a telegram arrived from the Minister of Communications of the USSR, comrade K. YA. Sergeychuk. The telegram read:

> Moscow 39651 118 20 12 49 governmental four addresses
>
> Moscow Central Telephone Center Director of Center Alekseyev copy to Secretary of Party organization Parnas copy to Chairman of Workers Committee Malygina copy to Administration of MCTN Babich.

The VTSSPS and Ministry of Communications for Selfless Labor 1941-1945 have resolved to award the Moscow Central Telephone Center the Red Banner of VTSSPS and Peoples Commissariat of Communications for permanent display, as victors in the All-Union Socialist Competition of Communications Workers held during the Great Patriotic War. I congratulate the workers of the Center for receiving this award of honor, and wish you further successes in your work. I am confident that the workers of the Center will also strive selflessly during the first year of the Fourth Stalin Five-Year Plan for high quality operation of the telephone network of the city of Moscow according to the requirements of Order No. 3 and will fulfill the tasks set before the organs of the Ministry of Communications for 1946. 3209

Minister of Communications Sergeychuk

The workers of the Central Telephone Center have carefully preserved the traveling red banner as an indication of the selfless labor of the team during the difficult years of the Patriotic War.

In 1942, organizations and population evacuated from the capital in the autumn of 1941 began to return to Moscow. Therefore, the demand for installation of new telephones in Moscow increased significantly. However, the Moscow network, which had very little free exchange capacity after the dismantling operations which had occurred, was not capable of satisfying the increasing demand for telephones. Since it was decided that it was not yet time to return the exchange equipment which had been evacuated from Moscow, the Moscow network in 1942, 1943 and early 1944 followed the path of construction of manual telephone exchanges of small capacity. At the same time, in 1942 some individual dismantled sections at ATE D1, ATE Zh4 and ATE K5, which had not been fully dismantled in the third round of dismantling operations, were restored and put back in operation.

On 5 February 1944, on the suggestion of comrade Stalin, the State Defense Committee adopted a resolution for the return to Moscow and reinstallation of automatic exchange equipment with a capacity of 30,000 numbers. After this resolution, welcome to the MCTN, the evacuated equipment began returning to Moscow, and installation work could begin again on a broad scale. Installation operations were conducted so rapidly that after but a few months, the first restored sections were in operation.

The overall picture of development of the network and restoration work performed in the MCTN in 1942-1945 can be seen from Table 10.

Table 10

Year	Additional installation of exchange capacity at existing exchanges	Installation and opening of new and restored exchanges
1942	ATE: D1, Zh4, K5	Secondary exchanges: Kirovskaya and Krasnaya Presnya
1943	--	Dorogomilovskaya secondary exchange
1944	ATE: G6, Zh2, D1, V1, Ye1, I1, K7	ATE V2, secondary exchanges: Dmitrovskaya, VSKHV and Leningrad
1945	ATE K7 and Dorogomilovskaya	ATE: D2, G1

Simultaneously with the opening of the restored automatic exchanges D2 and V2, the Administration of the Moscow City Telephone Network closed the temporary manual exchanges "Krasnaya Presnya" and "Kirovskaya" which had been located in the buildings of these ATE and which had capacities of 600 numbers each, serving since 1942.

We must note that of the total quantity of restored exchange equipment listed in the last table, three sections (at ATE V1, ATE D1 and ATE Ye1) in 1942 were restored exclusively by the efforts of the operating staff of the Moscow network, with absolutely no assistance from any construction organizations. In spite of the difficulty and novelty of this work, the operating teams coped successfully with the tasks assigned them. The sections were restored ahead of scheduled and accepted by a commission from the Peoples Commissariat for Communications with a good evaluation.

Together with the restoration of exchange equipment, the Moscow City Telephone Network in 1944-45 provided great assistance to several cities which had suffered from military action and Fascist occupation. A particularly significant amount of help was rendered in the restoration of the telephone network of the city of Bryansk. The Moscow network manufactured a telephone exchange for Bryansk, allocated a large quantity of line materials, and sent workers to Bryansk for the installation of the exchange. The help of the MCTN was highly evaluated by the Secretary of the Bryansk Oblast Party Committee comrade Matveyev, who sent a letter to the chief of the MCTN Administration, Secretary of the Party Bureau and Chairman of the Workers Committee of the Moscow telephone network. In this letter, comrade

Matveyev warmly thanked the administrators and the team of workers of the Moscow network for the help which they rendered in the restoration of the Bryansk telephone system.

The government, Peoples Commissariat for Communications and Moscow city organizations repeatedly remarked upon the selfless labor of the workers of the Moscow network during the years of the Great Patriotic War of the Soviet people against the German Fascist invaders.

For example, in 1941, an order of the Peoples Commissar for Communications of the USSR awarded the medal "Outstanding Socialist Competitor of the Peoples Commissariat of Communications" to a group of workers of the Moscow City Telephone Network for their high quality work during air raids and rapid elimination of the aftereffects of air raids. That same year, five workers of the network were awarded medals for "Outstanding Contribution to the Economy of Moscow" by the Executive Committee of the Moscow City Council of Workers Deputies for model performance of their Socialist duty.

In June of 1943, an Order of the Presidium of the Supreme Soviet of the USSR was published "awarding orders and medals to communications workers, the administration and all personnel of the military repair units of the Peoples Commissariat for Communications, USSR." Many communications workers were rewarded for model performance of assignments of the government in providing all types of communications to the defense forces of the country, including a number of workers of the Moscow City Telephone Network. Among those given awards were: I. A. Babich -- the Chief of the Administration of the MCTN, A. G. Petrov -- the Chief Engineer of the Administration of the MCTN, S. I. Postnikov -- a Deputy Chief Engineer of the Administration of the MCTN, N. M. Pominov -- a Deputy Chief Engineer of the Administration of the MCTN, YA. V. Ziskind -- the Chief of the Operational Group of the Administration of the MCTN, P. I. Alekseyev -- the Chief of the Central Telephone Center, engineers I. G. Postnov, I. YA. Kozlov, V. I. Kudinova; supervisors V. I. Ivanov, V. F. Korovin, A. M. Suzdalev and others.

In 1944, the Peoples Commissar for Communications issued an order commending the workers of the network who took part in the restoration of the exchange equipment of the ATE which had been removed from the city in 1941. Some of the workers were: engineers comrades Kudinova, Grits, Matyush and Vinogradov, who received the honored rank of "Master of Communications"; some of the workers were awarded the rank of "Outstanding Socialist Competitor of the Peoples Commissariat for Communications"; the rest of those who distinguished themselves most highly in installation work were given money prizes.

In that same year of 1944, many workers of the Moscow network who had participated in local antiaircraft defense of the capital or had served in

responsible communications positions during the war years were awarded the medal "For the Defense of Moscow."

Finally, in 1946, many workers were given medals "For Valorous Labor in the Great Patriotic War, 1941-1945."

Old workers of the Moscow network recall that under the concessioners, promotion of ordinary workers to administrative positions was an extremely rare phenomenon. If a worker was given a promotion, it was not due to his personal qualities as a man, not due to his knowledge and experience, but more frequently due to his connections, his acquaintance, his influence. Even so, the increase was always insignificant. An ordinary operator under the best of conditions might be promoted to the position of senior operator of a hall, an installer could dream only of becoming a technician. All of the other, higher duties were occupied by Swedes, and a simple Russian, no matter how talented, could never think that he might occupy one of those exhalted positions.

These were the conditions which existed in the network up to the Great October Socialist Revolution. Under Soviet power, the position changed quite basically. The best, most dedicated people were bravely promoted to administrative work, occupying responsible positions. The society, the Party organization provided their comrades who had been promoted with constant practical assistance, generously sharing their Soviet intelligence.

During the years of Soviet power, the Moscow network brought up and educated many talented workers with great initiative, who were later promoted to administrative work.

Let us mention here G. P. Shirokov, who began his work on the network during the time of the concession as a clerk ("boy") and is now the Chief Engineer of ATE I1.

The former chief of the Central Telephone Administration of the Ministry of Communications, Stalin Prize Laureate I. V. Lobov (now member of the staff of the Ministry for the Communications Industry of the USSR) is also a graduate of the Moscow network, where he began his work as an ordinary technician.

We must recall one of the leading specialists of telephone service, the late T. P. Gushchin, who, beginning his work on the network before the revolution as an apprentice installer, under Soviet power occupied a number of responsible technical positions right up to Deputy Chief Engineer of the MCTN Administration.

Former operator of the Moscow network A. S. Savenkova is now working as Senior Engineer in the Central Telephone Administration of the Ministry of Communications.

P. I. Alekseyev, who began working as an installer, is presently the head of the Central Telephone Center, the largest in the network, where he has shown himself to be an energetic, strong and capable commander.

The list of graduates of the Moscow network currently occupying administrative posts in the organs of communications could be significantly lengthened. However, it seems to us that the few examples we have presented suffice to demonstrate the great attention which has been given to the development of workers, the way in which capable, dedicated workers with initiative, Bolsheviks with or without Party membership, and how bravely they are placed in administrative positions.

VII. CONCLUSIONS

With this, we end our brief historical outline of the development and operation of the Moscow City Telephone Network over the 65 year period of its existence.

The war has ended. The Soviet army has defeated the dark forces of Fascism. "The centuries-old struggle of the Slavic people for their existence and independence has ended in victory over the German invaders and German tyranny" (J. Stalin).

The Moscow City Telephone Network will now be allowed to continue its work under peaceful conditions. The old workers have returned from the front lines of the Great Patriotic War, from the ranks of the victorious army. Using the working experience accumulated during the years of the war, the Moscow City Telephone Network as before is taking part in the Socialist competition of city telephone networks of the Soviet Union and striving to win an honorable position in this competition.

The prospects for further development of the Moscow City Telephone Network are tremendous. During the years of the new Stalin Five-Year Plan, a number of new regional automatic telephone exchanges will be opened in Moscow. The cable network will be significantly expanded. The population and enterprises of the capital will received tens of thousands of new telephones. The Moscow City Telephone Network must be a model for the telephone networks of the USSR.

3024
CSO: 8044/0079

END