Progress in DND's Space-based Radar R&D Project

Brian C. Eatock
Space-Based Radar Project
Defence Research Establishment Ottawa
3701 Carling Ave, Ottawa, CANADA K1A 0K2

Abstract

DND's Space-based Radar (SBR) Project is reaching the midpoint of its planned life. A series of *technology definition* contracts has been completed, involving many of Canada's premier space companies. A second series of *technology development* contracts has begun. This paper highlights the technical results of the contracts to date. The topics reviewed include antenna feeds, electric power systems, large space structures, signal processing, MMIC devices, communications, and simulation. An update on SBR Project Plans is provided.

Introduction

Aim

Canada is studying SBR because of its potential to provide wide-area surveillance of the airspace over North America and its approaches. The SBR program is expected to be collaborative with the United States, however, and the US has additional interests, for example, in protecting its fleets around the world from air attack.

The aim of the Canadian SBR R&D Project is to improve understanding of SBR within DND, and to improve the technology base in Canadian Industry, so that Canada could contribute significantly to a collaborative SBR Program.

Description of SBR

The main purpose of SBR is to detect, localize, and track aircraft. To do this, the satellite needs a powerful radar with a large antenna. SBR would be placed in a highly-inclined, low-earth orbit[1,2].

There are several concepts for SBR (Figure 1). The concepts can be classified as either reflectors or active phased arrays. The reflectors can be further classified as either agile reflectors, which are commanded to point in a desired direction, or rotating reflectors (RR). The phased arrays can be classified as either corporate-fed phased arrays (CFPA) or space-fed lenses (SFL). Last year the US Air Force advocated the rotating reflector, but did not receive approval to proceed with this option. As a result, the US program is emphasizing technology development. While the rotating reflector remains an option, the arrays are receiving more attention in technology development.

The basic problem for SBR is the detection of small targets, at long ranges, in earth clutter. To do this, a large power aperture product and clutter suppression are needed. The large aperture limits the clutter signal by reducing the beam width[3]. Advanced clutter suppression techniques allow a smaller aperture, but require more signal processing[4]. To get the large aperture, all SBR concepts use large flimsy structures with typical dimensions of tens of metres. All require high power, ranging from about 5 to 30 kW.

DISTRIBUTION STATEMENT A
Approved for Public Release
Distribution Unlimited

DTIC QUALITY INSPECTED 3

20000316 091

The reflector is the least expensive way to obtain a large power-aperture product, but the requirement to point the antenna in the direction of interest limits its operational flexibility, particularly for tracking or multi-tasking. Its high-power feed poses larger thermal problems, and the agile reflector has challenging dynamics.

The phased array has greater operational flexibility, but uses its power aperture less efficiently because the target is viewed at a large scan angle. The phased array has challenging signal and power distribution problems. Its need for thousands of efficient, low-cost, reliable transmit/receive (T/R) modules is a technology driver.

Project History

The US has studied SBR since the early sixties, and began technology development in earnest in the eighties. Canadian efforts began in the early eighties, and the SBR Project has been under way since 1 April 1987.

The Project is divided into several phases (Figure 2). To prepare for the SBR R&D Project, two Concept and Feasibility Studies were completed in 1986 by teams led by Spar and CAL. A series of *technology definition* contracts has just been completed (Figure 3), and the Project has entered its main phase with several larger *technology development* contracts.

Relationship to the US Program

Canada has an information exchange agreement with the USAF, and much effort has been directed toward improving the cooperation between the two countries. Plans are being made for Canada to participate in the US Demonstration/Validation phase, but a Memorandum of Understanding (MOU) would be required. Many issues, such as industrial strategy, have to be resolved before the MOU is negotiated. The role of the SBR R&D Project is to support a Canadian Capital Acquisition Project that would likely be collaborative.

Results of R&D

Antenna Feed Networks

Work on antenna feeds for SBR has been sponsored by DREO and the SBR Project since 1982. The goal was to develop a Rotman lens feed for the SFL. The Rotman lens feed would permit excellent control of antenna sidelobes[5].

Chan Technologies Inc. (CTI) has developed design software, using a full electromagnetic wave approach, for the Rotman lens and other feeds such as the Butler matrix and Blass matrix. Spar has built two experimental Rotman lenses, a C-band Rotman lens using microstrip technology, and a large L-band Rotman lens using stripline. Unfortunately, the L-band lens did not meet the design goals, likely because of non-uniformities in dielectric constant introduced during the manufacturing process. Spar and CTI believe that the problem could be avoided by choosing a material with a lower dielectric constant. Spar has also built an experimental Butler matrix designed by CTI, but one of the output ports was deficient. Spar is confident that the manufacturing problems can be resolved.

Since this program was started, the emphasis has shifted away from the SFL. However, the technology may be applicable to reflector feeds. Therefore, once the problems of

manufacturing the Rotman lens are resolved, we may opt to have an S-band feed designed and built that could be used with a rotating reflector.

The design tools developed by CTI have been used to design Rotman lenses for Argos Systems and for Raytheon, and to design Blass matrices for GE and for Ericsson.

The application of optical technology to SBR was the subject of two technology definition contracts by Spar and MPB. They investigated the use of optical techniques for rf signal distribution, control signal distribution, beam forming, and signal processing. The potential advantages include savings in weight and immunity to EMI. The main disadvantage is greater complexity. Also, exposure of optical fibres to the high-radiation environment of space could lead to their darkening. We concluded that an optical feed is not likely to be used in a first-generation SBR. However, work on this technology is continuing for later generations. A contract has been completed by MPB to develop and characterize a one-way (transmit) fibre-optic link with eight-way branching. The design goals were met, and a second contract will develop an eight-to-one receive link. Optical feeds for phased arrays is a topic of research in many labs, and practical applications have begun to emerge. The technology has applications to airborne, marine, and terrestrial radar as well as to SBR.

Electric Power Systems

Two technology definition contracts were awarded to Spar and CAL to investigate electrical power distribution and control systems for SBR. Both contractors concluded that the distribution of high power pulses to large phased arrays requires technological advances in several areas. An SBR satellite is expected to require about 25 kW of prime power and to use a dc distribution network operating around 150V. High voltage solar arrays and batteries will be required. R&D is needed in power generation, conditioning and in distribution[6].

Under a technology development contract, CAL and Spar are developing proof-of-concept (POC) hardware in these areas. CAL will investigate the prime power subsystem, especially conversion and regulation, while Spar concentrates on the distribution network. The POC system will consist of bread-board hardware integrated in a test bed (Figure 4). The hardware will not be space qualified. Some elements of the system, such as the solar array, will be simulated. Spar will also investigate solar array technology, and plan to devise a conceptual design for a large array. The value of this three-year contract is $7.5M.

There are spin-offs to this research whether or not SBR goes ahead, and whether or not the phased array is selected. High voltage dc distribution will be the trend for powerful satellites, and any improvements in efficiency would find application. Sixty per cent of the contract concerns the prime power system, which is also applicable to reflector concepts.

Large Space Structures

Several contracts concerning large space structures have been managed for SBR by the Division of Space Mechanics of the Canadian Space Agency (CSA).

The first contract, concerning mechanical stability, preceded the formal SBR Project start. Its purpose was to develop analytical tools to predict the response of structures to mechanical and thermal stresses and to evaluate the effects on the antenna radiation pattern. A team led by Aastra Aerospace developed the tools and used them to analyse the CFPA and SFL concepts that had been proposed by CAL and Spar. Aastra showed that the CFPA is robust, because its truss structure provides stiffness, and there is adequate thermal protection.

The SFL is more flexible because of its large membrane and long boom. The thin lens is difficult to protect thermally, and the large size makes deployment complicated. Fortunately, the effects on the radar beam are self-compensating. As a result of this contract Aastra received a subcontract from TRW, and was able to make teaming arrangements with both TRW and GE. The reflector concept was not modelled in detail, but initial analysis of the agile reflector suggested that mechanical slewing could pose problems.

Two technology definition contracts were awarded to Dynacon and Spar to investigate testing of large space structures. The purpose of these contracts was to develop generic models of SBR spacecraft, to survey the state of the art for test of these spacecraft, and to recommend test technologies for development. Spar's top priority was the development of modal verification techniques for the stowed structure. Dynacon's top priority was multiple-boundary-condition testing of large deployed structures.[7] Both companies recommended work on thermal testing. Spar advocated working on technology for IR thermal testing, while Dynacon and its subcontractor, Maya, proposed work on interpretation of IR test results. The third priority for both teams was work in control/structures interactions. A technology development phase is planned, valued at $2M, that will last two to three years.

Techniques for non-contact measurement for testing large space structures have been the subject of contracts carried out at TUNS for DSM and SBR[8].

The SBR Project has supported improvements to Maya's Thermal Model Generator (TMG) package.[9] This has resulted in technical improvements to the modelling capability of the software, and to its availability on more computers. During the contract the company's customer base has grown from seven to more than 100 world-wide.

An contract for work in smart structures has been awarded to Aastra Aerospace. Smart structures incorporate sensors and actuators, for example, to provide active damping of vibrations. The contractor is required to develop a sensor/actuator model, and demonstrate proof of concept.

Canada already has considerable expertise in space structures and the efforts described here should help to reinforce this position. One possible role for Canada in the SBR program is to test the SBR spacecraft. Even if that does not occur, the technologies developed are sure to find other applications.

Signal Processing

Signal processing for SBR is considered one of the technology drivers[1]. Seven technology definition contracts were devoted to signal processing and related subjects.

Contracts to Raytheon and MacDonald Dettwiler and Associates (MDA) were concerned with signal processing and target detection. MDA emphasized hardware, architectures, and conventional signal processing techniques. Raytheon emphasized algorithms, particularly for the displaced phase-centre antenna (DPCA) technique of clutter suppression[2].

Surveillance and automatic tracking techniques were considered in contracts to Raytheon and Thomson-CSF. Both companies recommended the use of advanced tracking techniques such as multiple hypothesis testing and probabilistic data association. These techniques were emphasized because they make maximum use of the information available to the SBR. They may not be appropriate, however, for systems such as the rotating reflector, which provide few hits with long update intervals.

Raytheon and Com Dev investigated ECCM requirements for SBR. To reduce the effects of interference, SBR requires antennas with very low side lobes. Raytheon emphasized techniques for adaptive nulling and recommended the development of a signal processing and adaptive nulling test bed to be used in designing the computationally intensive algorithms. Com Dev adopted a niche strategy, and recommended specific areas of technology for development, for example, SAW filters for equalization of antenna channels, and hardware for digital pulse compression.

MDA investigated the feasibility of using the L-band antenna in a synthetic aperture radar (SAR) mode. They concluded that the SAR images would have insufficient resolution. Though performance in detecting strong targets such as ships would be good, weak targets would not be detected. The problem of detecting rapidly moving targets was not solved.

From the recommendations flowing from these contracts, a technology development contract has been defined, valued at $7M over three years. The aim is to design practical signal processing methods to detect and localize moving targets in earth clutter, and to develop proof-of-concept hardware in a laboratory test bed. Space-qualified hardware will not be required. The system will comprise a signal generator that simulates SBR returns including clutter, the digital signal processor, and an analysis system (Figure 5). The test bed will start at the outputs of the A/D converters and stop with detections; tracking will not be included. The contractor will be required to demonstrate basic signal processing functions in real time for at least two successive dwells (about 1 sec). The output of this program will be a signal processing test bed, with application to other radar programs besides SBR. The contract is expected to begin in the fall of this year.

MMIC devices

If a phased array were selected, there would be a requirement for tens of thousands of low-weight, efficient, low-cost T/R modules. The US has supported the development of advanced L-band T/R modules suitable for SBR. While Canada could not compete in this field, it is possible that we could provide an alternative source for some components. The SBR Project funded a small technology definition contract to determine what part of a T/R module should be developed in Canada. The decision was to concentrate on the low-noise amplifier (LNA), including the switch and protection device preceding it.

The current contract, for $900K over 19 months, is to develop an MMIC LNA. Optotek has manufactured LNAs to five different designs, and has selected the best configuration. Detailed characterization and packaging of the chosen configuration has begun.

Communications

Two technology definition contracts were awarded to Com Dev and Spar to study communications links for SBR. An SBR constellation would require secure, low or medium data-rate links and global access. A high data-rate down link would be required for development.

Of the numerous architectures identified, both contractors recommended a mix of direct down links and cross links using shared data-relay satellites. Both contractors also recommended that Canada develop technology for a 60-GHz cross link. This would complement work being done under the EHF Satcom Project, which has concentrated on the up and down links, and it is a natural extension of our current capabilities.

Therefore, a contract has been awarded to Spar and Com Dev for the development of a 60-GHz proof-of-concept model of a cross link between a geosynchronous data relay satellite and an SBR satellite (Figure 6). The demonstration will include the tracking function for the LEO satellite. The contract has a value of $3.5M and a duration of three years. It began in April 1991.

Simulation

SBR is a complex system that would have to work with current surveillance assets. To evaluate different SBR configurations, an SBR Simulation Lab (SBRSL)[10, 11] was developed by Aastra Aerospace under a $2.4M contract. The simulator was delivered in March 1991.

The SBRSL can model the performance of SBR as either an isolated system or as an element of NORAD. The SBRSL has three operating states: the SBR System Simulator (SBRSIM), the Integrated Surveillance and Interception Response System (ISIRS), and Common Support. SBRSIM models the detection and tracking performance, accounting for effects of parameters such as orbit, antenna, waveform, signal processing, power supply, interference, and deformations. The models are functional. ISIRS models are less detailed than SBRSIM models, but interactions with other elements of the air defence system are included. Besides the SBR constellation and targets, the elements modelled include ground radars, airborne radars, command and control, communications, interceptors, and jammers.

The SBRSL was designed to be flexible in defining simulations, and in upgrading models, while maintaining tight control of the software. An object-oriented language (Objective C) was adopted to promote modularity, reusability of code, and flexibility.
Users can interact with the SBRSL by running a packaged experiment, changing monitoring and recording specifications, writing procedures for data analysis, defining new model configurations, and constructing new model classes. Figure 7 shows a typical screen.

The simulator is undergoing a long series of validation tests, and problems are being corrected through a maintenance contract with Aastra. The validation phase will be followed by use and model development, a combined industry and in-house effort. A small contract to add a more sophisticated tracking algorithm has already been awarded to Raytheon Canada Ltd. A secondary benefit of this contract is that we will learn how difficult it is for third parties to develop new models for the simulator.

Summary

SBR presents challenges across the spectrum of space technologies: antennas, power, structures, devices, signal processing, communications, and simulation. These challenges imply a significant risk. However we are gaining a better understanding in all of these fields, and the Canadian technology base is improving. Significant progress has already been made and we expect more successes from the technology development phase. The US program is fluid, and Canadian participation is undefined, so SBR Project plans must be adaptable. We are confident that Canada can contribute significantly to a collaborative SBR program.

Acknowledgements

Funding for the contracts described here has been either through DND SBR Project funds, D6471, or through DREO Tech Base funds, 041LF. The work reported here is the result of the efforts of many individuals in various companies where the work was done, and of many

individuals, who planned and managed the contracts, at the Defence Research Establishment Ottawa and at the Division of Space Mechanics, CSA.

References

1. Brookner, Eli, and Mahoney, Thomas F., *Derivation of a Satellite Radar Architecture for Air Surveillance,* **IEEE Eascon '83 — 16th Annual Electronics and Aerospace Conference and Exposition**, 19-21 September 1983, Washington, DC, pp. 465-475, 1983.

2. Tsandoulas, G. N., *Space-Based Radar,* **Science**, Vol. 237, pp. 257-262, 17 July 1987.

3. Bird, J. S. and Bridgewater, A. W., *Performance of space-based radar in the presence of earth clutter,* **IEE Proceedings**, Vol. 131, Pt. F, No. 5, August 1984.

4. Kelly, E. J. and Tsandoulas, G. N., *A Displaced Phase Center Antenna Concept for Space Based Radar Applications,* **IEEE Eascon '83 — 16th Annual Electronics and Aerospace Conference and Exposition**, 19-21 September 1983, Washington, DC, 1983.

5. Tang, R., *Survey of Time-Delay Beam Steering Techniques,* in: Oliner, Arthur A. and Knittel, George H., eds., **Phased Array Antennas**, Dedham, MA: Artech House, pp. 254-260, 1972.

6. Moody, M. H. and Maskell, C. A. *Electrical Power Distribution on Space Based Radar Satellites,* **IEEE AES Magazine**, pp. 10-16, November 1989.

7. Sincarsin, W.G., McTavish, D.J., and Sincarsin, G.B., Space Based Radar—Test of Large Space Structures, **Proceedings of the Sixth CASI Conference on Astronautics**, 19-21 November 1990, Ottawa, pp. 221-234, 1990.

8. Soucy, Y., Graham, W.B., Mitchell, A.K., and Hazell, C.R., Technology Development for Non-contact Measurement in Modal Testing of Large Space Structures, **Proceedings of the Sixth CASI Conference on Astronautics**, 19-21 November 1990, Ottawa, pp. 235-251, 1990.

9. Duffy, K., Advances in TMG, **Proceedings of the Sixth CASI Conference on Astronautics**, 19-21 November 1990, Ottawa, pp. 420-428, 1990.

10. Maskell, S. Y., **Space-based Radar Simulation Laboratory**, DREO Tech Note 89-24, September 1989.

11. Byrne, John et al., *Validation Plan for a Space-Based Radar Simulation,* in: Svrcek, Bill and McRae, John, eds., **The Proceedings of the 1990 Summer Computer Simulation Conference**, 16-18 July 1990, Calgary, pp. 737-742, 1990.

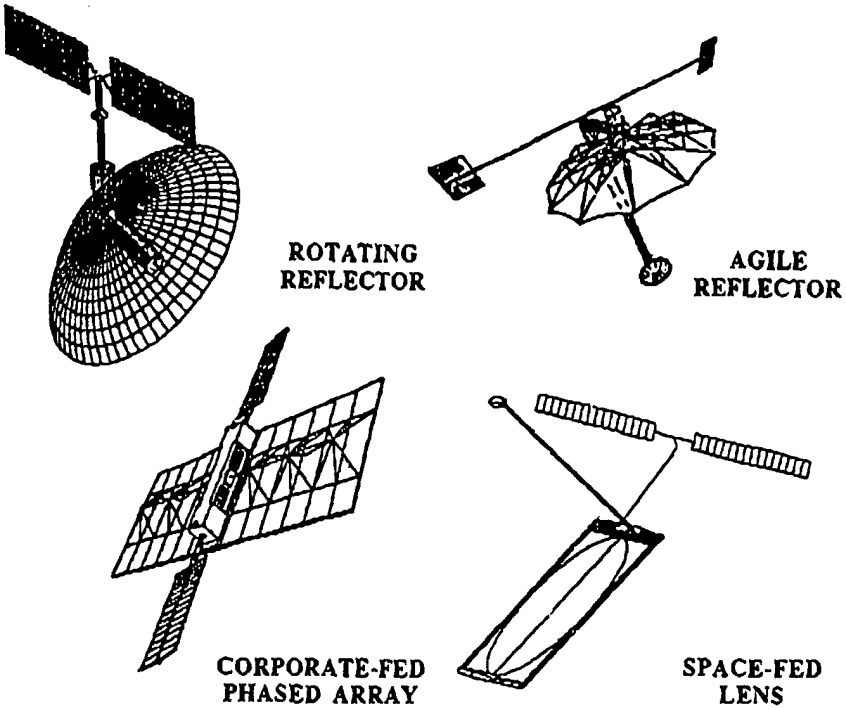

Figure 1. SBR Concepts.

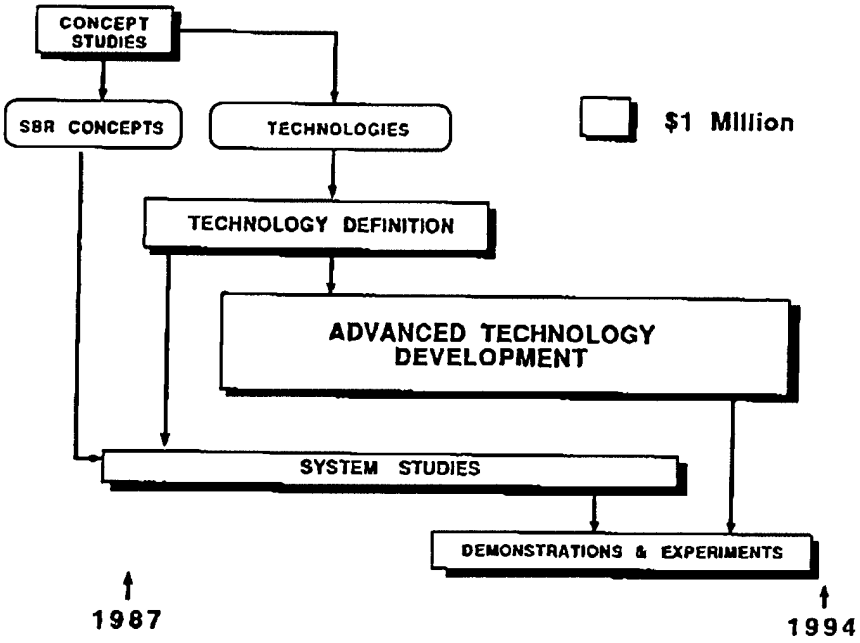

Figure 2. SBR Project Structure. The area of the boxes is indicative of the effort expended in each phase.

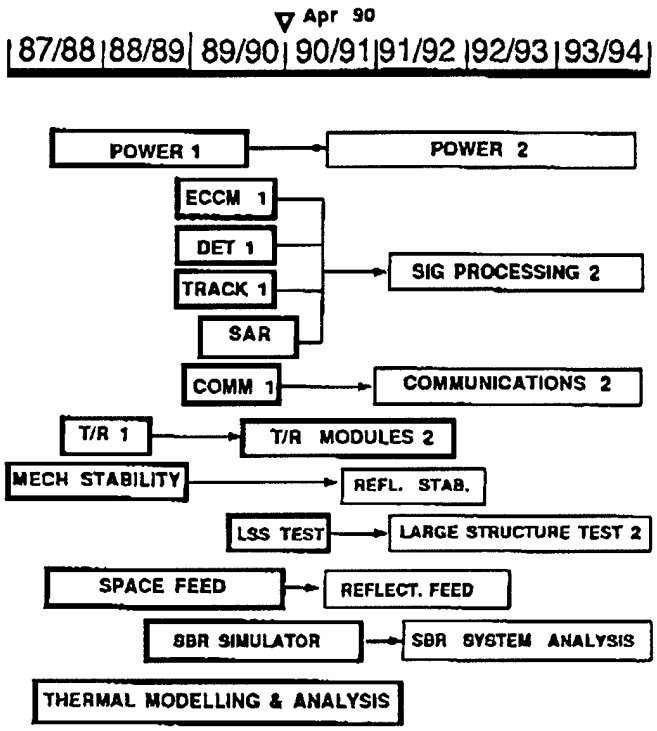

Figure 3. SBR contracts. Those outlined in bold have been completed or are near completion. Those labelled '2' form the advanced technology development phase.

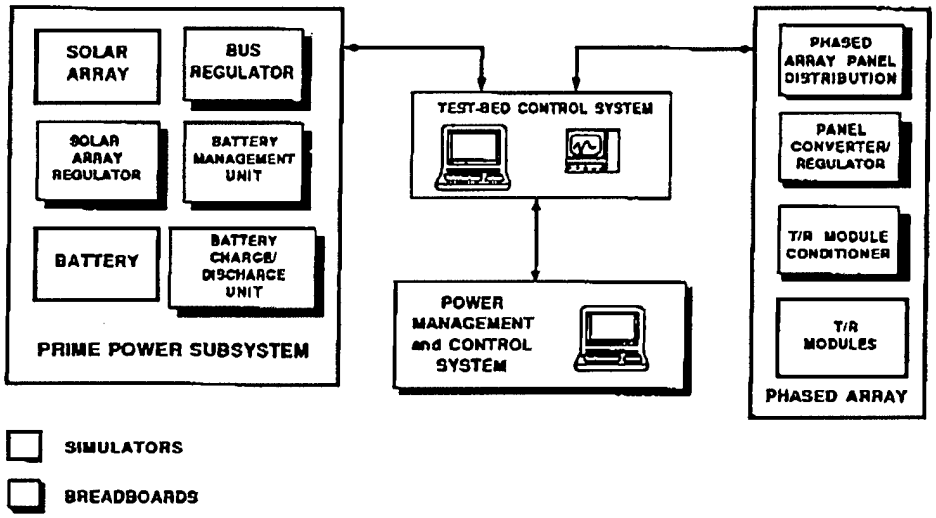

Figure 4. The Electrical Power test bed.

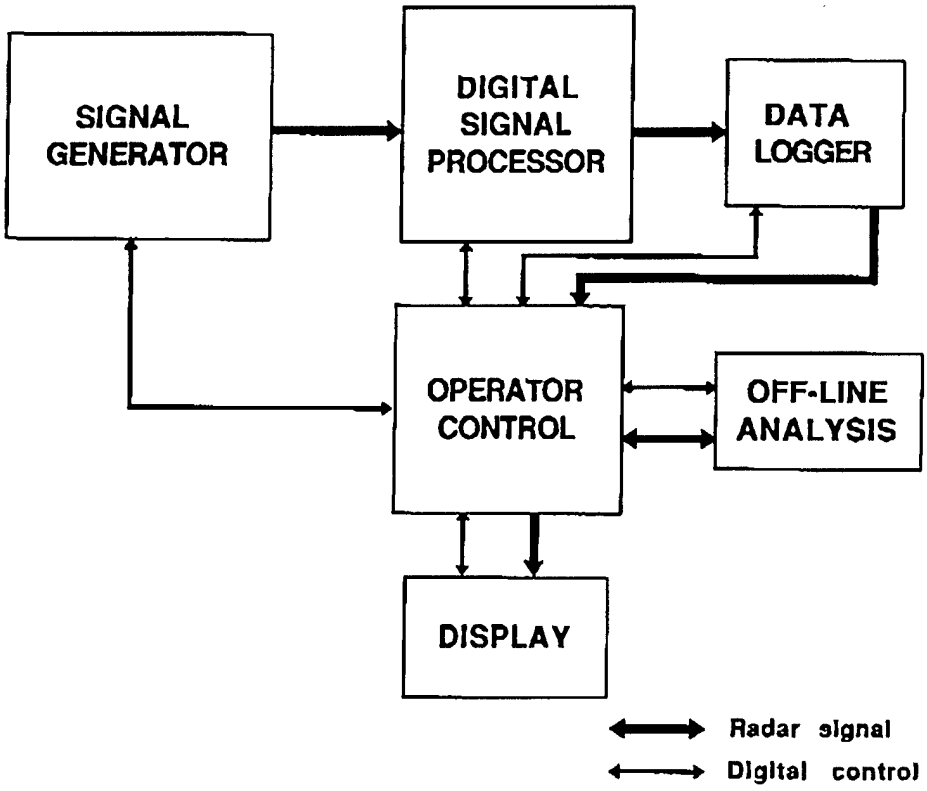

Figure 5. The Signal Processing test bed

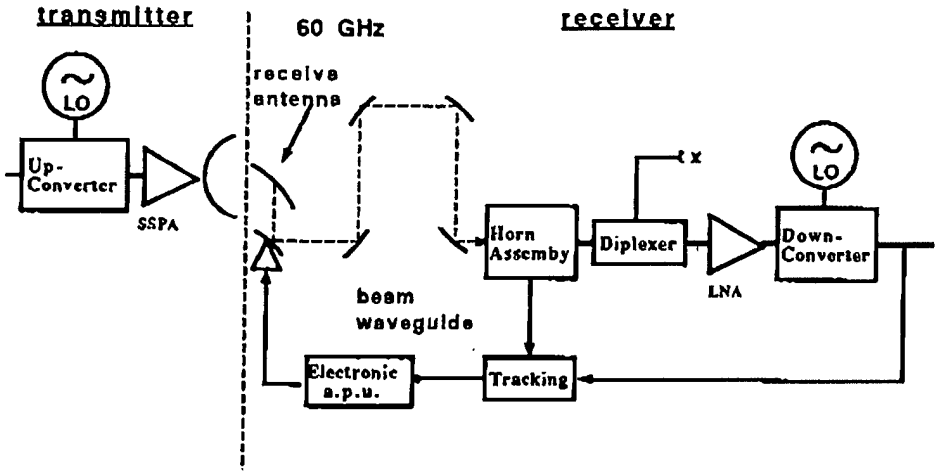

Figure 6. The Proof-of-Concept 60-GHz Crosslink

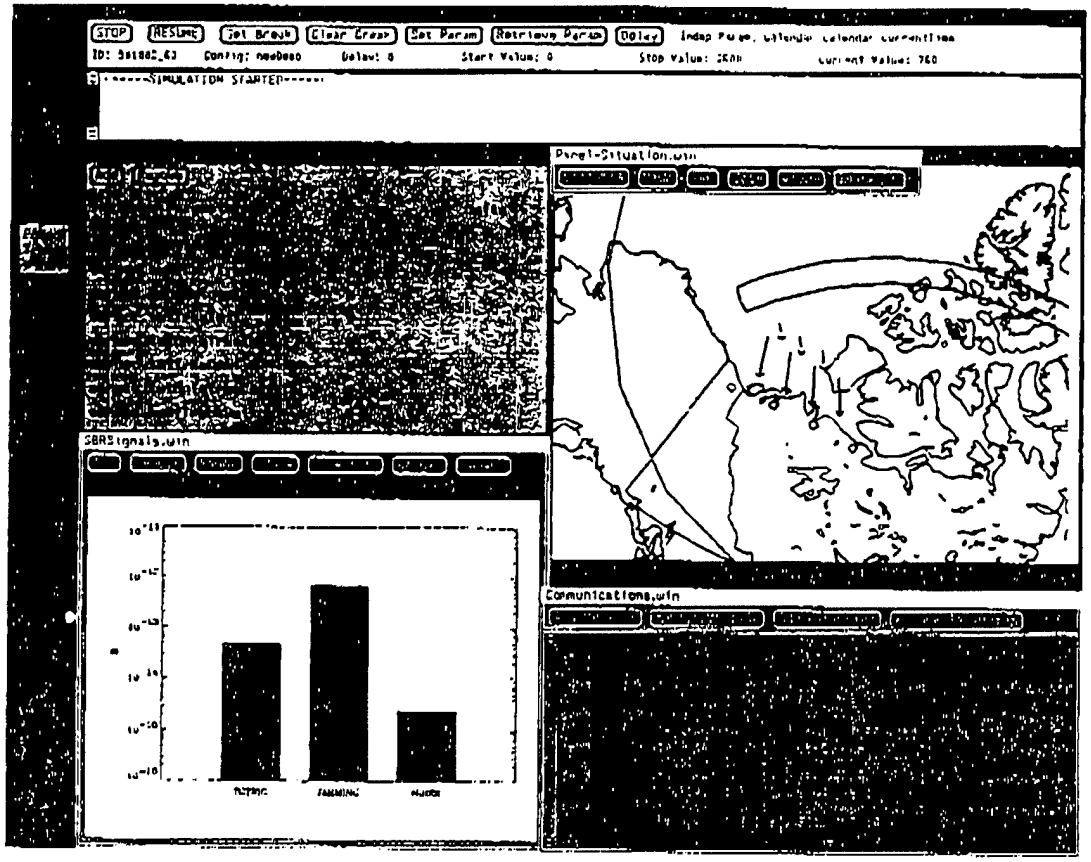

Figure 7. An example display from the ISIRS simulator. The various windows show interactive commands, the values of parameters selected, a map showing progress of the simulation, bar graphs of selected variables, and system messages. The display can be configured by the user.