Component Designs for SOAR's Spartan IR Camera

2d Lt Daniel E. Polsgrove
Under direction of Dr. Edwin Loh
Michigan State University
19 Aug 99

ABSTRACT

Students and faculty from Michigan State University, in partnership with three other groups, are currently conducting research in a joint effort to construct a 4-meter telescope on a mountaintop in the Chilean Andes by the year 2002. The SOAR (SOuthern Astrophysical Research) project will take advantage of the telescope's size to observe the unique astronomic phenomena of the Southern Hemisphere in greater detail than ever before. Michigan State is responsible for building the Spartan IR Camera, an instrument that will be used for making observations at infrared wavelengths. This report is a compilation of five self-sufficient and informal papers describing original design concepts for several components of the Spartan IR Camera. The first paper addresses the 200 mm diameter silica window to be used as an optical barrier between the outside atmosphere and vacuum conditions inside the instrument. This 15 psi pressure gradient will cause the window to bend that is modeled by a fourth-order polynomial equation. The second paper illustrates the effects of gravity on the 11 individual optical elements that will be mounted on the optical bench of the IR Camera. The final three papers describe three independent design ideas for the two primary camera structures: the optical bench and liquid nitrogen reservoir. The structural limitations on these structures include: 1) they must both fit inside a space 1m x .75m x .75m and 2) have a combined mass as far below the maximum limit of 120 kg as possible. Additional criteria state that the reservoir must hold at least 40 lbs (18.2 kg) of liquid nitrogen and there must not be any greater than a 5 arcsecond angular deflection anywhere on the top surface of the optical bench. Each of the three designs (labeled A through C) complies with the criteria, but they each have certain advantages and disadvantages with regards to total mass, manufacturing difficulty, etc. The decision on what design to use (if any) will have to be made in the relatively near future by other members of the SOAR research group at Michigan State.

20000307 046

DTIC QUALITY INSPECTED 3

REPORT DOCUMENTATION PAGE

Form Approved
OMB No. 0704-0188

Public reporting burden for this collection of information is estimated to average 1 hour per response, including the time for reviewing instructions, searching existing data sources, gathering and maintaining the data needed, and completing and reviewing the collection of information. Send comments regarding this burden estimate or any other aspect of this collection of information, including suggestions for reducing this burden, to Washington Headquarters Services, Directorate for Information Operations and Reports, 1215 Jefferson Davis Highway, Suite 1204, Arlington, VA 22202-4302, and to the Office of Management and Budget, Paperwork Reduction Project (0704-0188), Washington, DC 20503.

1. AGENCY USE ONLY *(Leave blank)*	2. REPORT DATE	3. REPORT TYPE AND DATES COVERED
	17.Feb.00	MAJOR REPORT

4. TITLE AND SUBTITLE
COMPONENT DESIGNS FOR SOAR'S SPARTAN IR CAMERA

5. FUNDING NUMBERS

6. AUTHOR(S)
2D LT POLSGROVE DANIEL E

7. PERFORMING ORGANIZATION NAME(S) AND ADDRESS(ES)
MICHIGAN STATE UNIVERSITY

8. PERFORMING ORGANIZATION REPORT NUMBER

9. SPONSORING/MONITORING AGENCY NAME(S) AND ADDRESS(ES)
THE DEPARTMENT OF THE AIR FORCE
AFIT/CIA, BLDG 125
2950 P STREET
WPAFB OH 45433

10. SPONSORING/MONITORING AGENCY REPORT NUMBER
FY00-77

11. SUPPLEMENTARY NOTES

12a. DISTRIBUTION AVAILABILITY STATEMENT
Unlimited distribution
In Accordance With AFI 35-205/AFIT Sup 1

12b. DISTRIBUTION CODE

13. ABSTRACT *(Maximum 200 words)*

14. SUBJECT TERMS

15. NUMBER OF PAGES

16. PRICE CODE

17. SECURITY CLASSIFICATION OF REPORT	18. SECURITY CLASSIFICATION OF THIS PAGE	19. SECURITY CLASSIFICATION OF ABSTRACT	20. LIMITATION OF ABSTRACT

SPARTAN IR CAMERA FOR THE SOAR TELESCOPE

200 mm Window Deflection Due to Atmospheric Pressure

Edwin D. Loh
Daniel E. Polsgrove

Department of Physics & Astronomy
Michigan State University, East Lansing, MI 48824

Loh@pa.msu.edu 517 353–4869

4 June 1999

1. Problem Definition

The Spartan IR Camera requires a 200 mm diameter optical window to serve as a barrier between the outside atmosphere and vacuum conditions inside. Determine whether or not the bending in (deflection) of the window due to atmospheric pressure will significantly effect the path of the light passing through it. If the effect is significant, determine the equation defining the bent shape of the window.

2. Assumptions and Criteria

2.1. The preferred material for the optical window is silica. Calculations will be made assuming this is the material that is going to be used.

2.2. The window is circular and therefore exhibits circular symmetry with respect to the z-axis, as shown in Figure 1. Its radius is 100 mm.

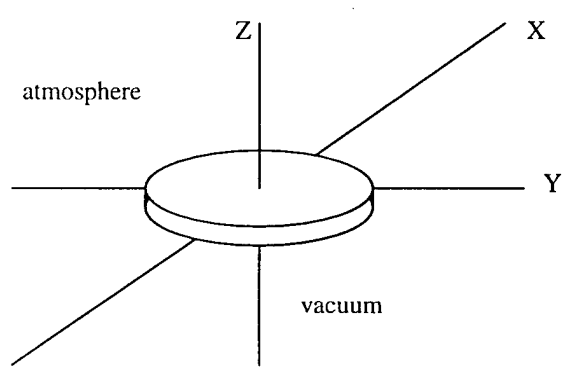

Figure 1. Optical window system of coordinates.

2.3. The window is simply supported on all edges (at r = 100 mm, z = 0) (simply supported boundary condition means dz/dr is NOT = 0 at r = 100 mm).

2.4. The window is 10 mm thick[1].

2.5. Observations will be made at wavelengths of approximately one micron ($1*10^{-6}$ meters). The maximum deflection allowable without significantly effecting

observations is 1/10 the observing wavelength. Therefore, bending greater than 0.1 micron constitutes a significant deflection.

3. Constants and Equations

E = $73*10^9$ Pa (Young's Modulus for fused silica)[2]

V = 0.17 (Poisson's ratio for fused silica)[3]

Q = $101.3*10^3$ Pa (atmospheric pressure at sea level)

A = 0.2 m (radius of the optical window)

T = 0.01 m (thickness of the optical window)

$$K = \frac{ET^3}{12(1-V^2)}$$

(Flexural rigidity or bending stiffness)[4]

$$deflection(r) = \frac{-QA^4}{64K}\left(1-\frac{r^2}{A^2}\right)\left(\frac{5+V}{1+V}-\frac{r^2}{A^2}\right)$$

(Deflection in meters as a function of polar coordinate r)[4]

4. Calculations and Results

Appendix I contains the MathCad 6.0 spreadsheet used to produce the following data plots.

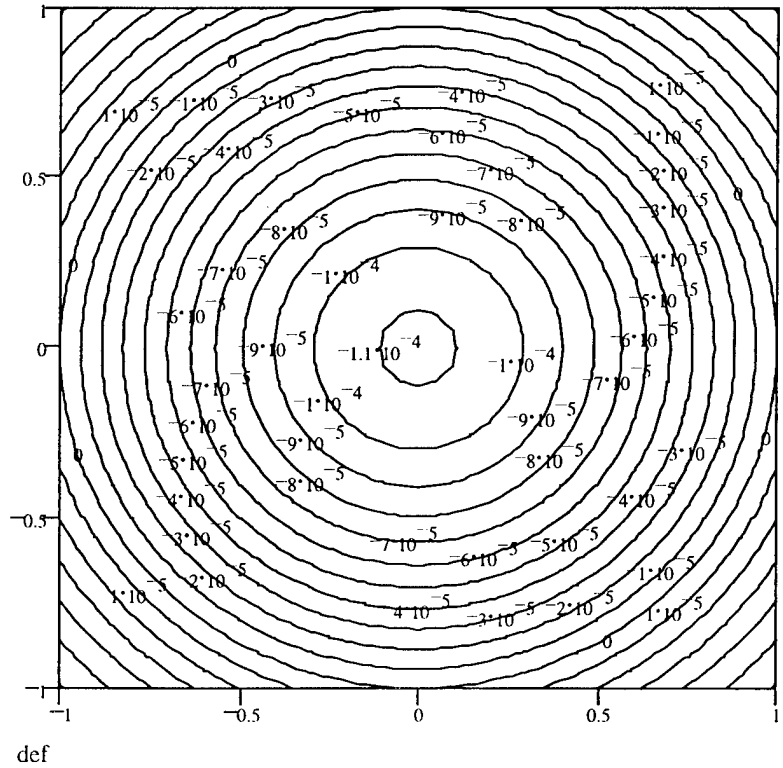

Figure 2. Deflection contour plot in units of meters.

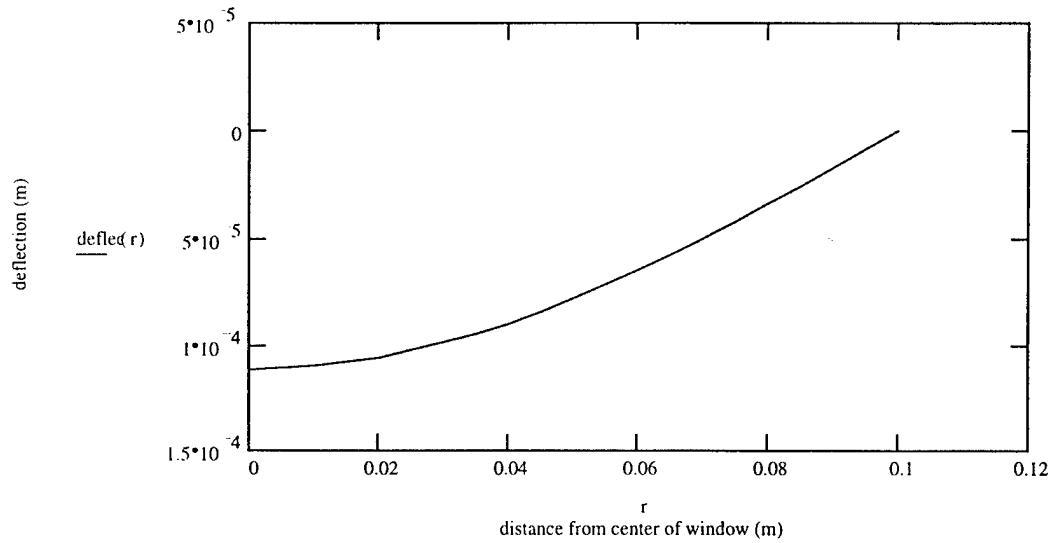

Figure 3. Deflection as a function of distance from the center of the optical window.

4.1. As can be seen in Figures 2 and 3, the maximum deflection is over 100 microns and occurs at the center of the window. This is over 1000 times greater than the maximum tolerable deflection. Therefore, the deflected shape of the window must be modeled mathematically.

5. Mathematical Deflection Model

5.1. The deflection equation for this system is simply a fourth-order polynomial, so the easiest way to model the deflected shape of the window is with an equivalent fourth-order polynomial expression:

$$deflection = -Ar^4 + Br^2 - C$$

A = 0.253
B = 0.014
C = 0.0001116

5.2. This equation was then put into the SOAR Airy disk program and gave acceptable results.

6. Minimum Thickness Requirement

6.1. The final topic to be addressed is making sure the window will not rupture (crack, shatter, etc) under the load imparted on it due to atmospheric pressure.

6.2. The equation for determining the minimum window thickness required to avoid rupture is[5]

$$thickness = D\sqrt{SF\left(\frac{K}{4}\right)\left(\frac{P}{MOR}\right)}$$

D = Window diameter

SF = Safety Factor (used a value of 4 in this calculation)

K = 1.125 (constant factor given in the reference for simply supported window boundary condition)

P = Pressure (101.3×10^3 Pa - atmospheric pressure)

MOR = Modulus of Rupture (structural constant for a given material - silica in this case)

6.3. Appendix II shows calculations made for minimum thickness using MathCad. Different brands of silica have different values for modulus of rupture, so the minimum required window thickness naturally depends on this parameter. Calculations based on the information available indicate that the window thickness will probably need to be slightly greater than the 10 mm that was assumed in Appendix I. However, this will not undermine the validity of the results in Appendix I. In fact, a greater window thickness actually helps these results because the thicker window will suffer less deflection than the 10 mm window. And if the deflection suffered by the 10 mm window is acceptable according to Airy disk analysis, then the deflection suffered by a thicker window will undoubtedly also be acceptable.

7. Conclusion

Calculations above have shown that the 200 mm optical window will bend significantly under the atmospheric pressure load it will be subjected to. However, the shape of the window can be modeled mathematically via fourth-order polynomial and consequently be accounted for in order to allow the Spartan IR camera to function properly. The precise thickness required for the window to avoid rupture will remain unknown until the exact modulus of rupture for the material being used can be identified. When the time comes to actually build this instrument, the most practical sequence of events would be to find out from a given company what the modulus of rupture is for their silica, then calculate the minimum required thickness for a 200 mm window made of that silica, then find out if that company can manufacture a window of that (or a little bit greater) thickness. Finally, when the exact dimensions of the window to be purchased are known, go back and recalculate the deflected shape of the window according to the template provided here in the MathCad worksheet of Appendix I. Once this is accomplished, the fourth-order polynomial equation for the deflected shape will be defined (constants A, B, and C of section 5.1 will be known), and this portion of the camera will be ready for use.

References

[1] Using a thickness of 10 mm for calculations was based on the knowledge that this size window is available for purchase through Almaz Optics, Inc (e-mail received 28 May 1999):

"We can supply you a window made of Bubble/Inclusion Free Synthetic Fused Silica
Dia 200.0 x 8.0 Thk, mm for $500.00
Dia 200.0 x 10.0 Thk, mm for $550.00
Delivery: 3-4 weeks.
We accept university purchase orders and major credit cards.
Sincerely,
Vladimir Vaynerman
Almaz Optics, Inc.
701 South Route 73, W. Berlin, NJ 08091
Phone: 609-768-9118
Fax: 609-768-3610
Web site: www.almazoptics.com
email: mail@almazoptics.com"

[2] Physical Properties: Fused Silica 7940. Precision Glass & Optics Products, Inc. http://precision-glass.com/material/silica.html

[3] UV Grade Fused Silica. Layertec, Inc. http://layertec.de/sio2uv.htm

[4] Flugge, Edward. Handbook of Engineering Mechanics, 1961. (Available at MSU Engineering Library: TA 350.F58).

[5] Young, Tony. University of Hawaii. http://kupono.ifa.hawaii.edu.

APPENDIX I

circular plate deflection calculations for 10 mm plate thickness

$h := .01$ Almaz Optics quoted thickness (meters)

$a := .1$ plate radius (meters)

$E := 73 \cdot 10^9$
Young's modulus for fused silica (Pa)

$v := .17$
Poisson's ratio for fused silica

$q := 101.3 \cdot 10^3$
Uniform atmospheric pressure load (Pa)

$K := \dfrac{E \cdot h^3}{12 \cdot (1 - v^2)}$ flexural rigidity (meters^3)

SIMPLY SUPPORTED BOUNDARY CONDITION

$maxdef := \dfrac{q \cdot a^4}{64 \cdot K} \cdot \left(\dfrac{5 + v}{1 + v}\right)$ $\quad maxdef = 1.116 \cdot 10^{-4}$

max deflection is comparable to max deflection for the square plate, as it should be.

$i := 0, 1 .. 40 \qquad j := 0, 1 .. 40 \qquad x(i) := .005 \cdot i - .1 \qquad y(j) := .005 \cdot j - .1$

$r(i,j) := \sqrt{x(i)^2 + y(j)^2} \qquad def_{i,j} := -\left[\dfrac{q \cdot a^4}{64 \cdot K} \cdot \left(1 - \dfrac{r(i,j)^2}{a^2}\right) \cdot \left(\dfrac{5 + v}{1 + v} - \dfrac{r(i,j)^2}{a^2}\right)\right]$

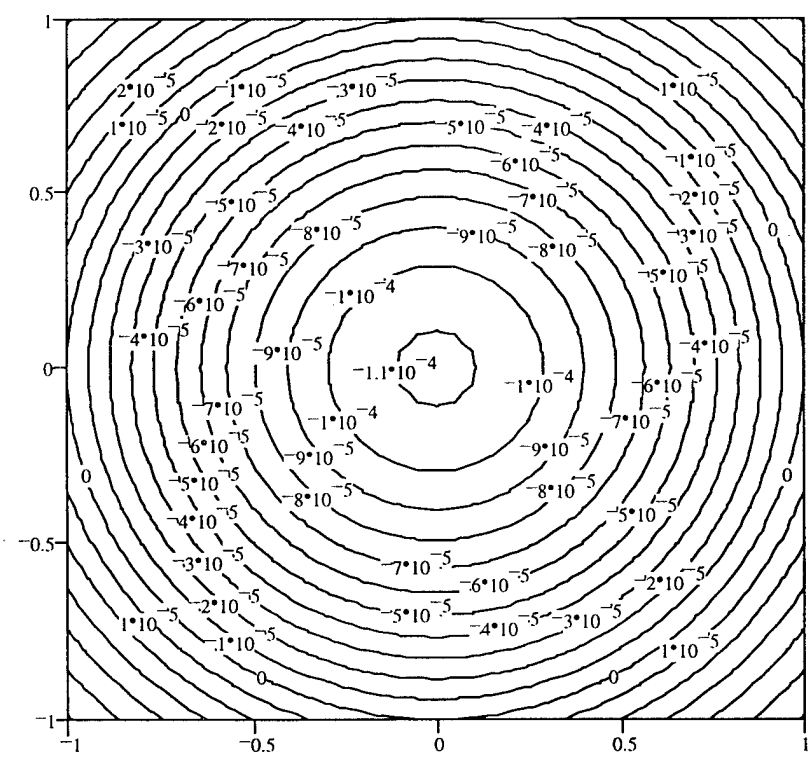

def

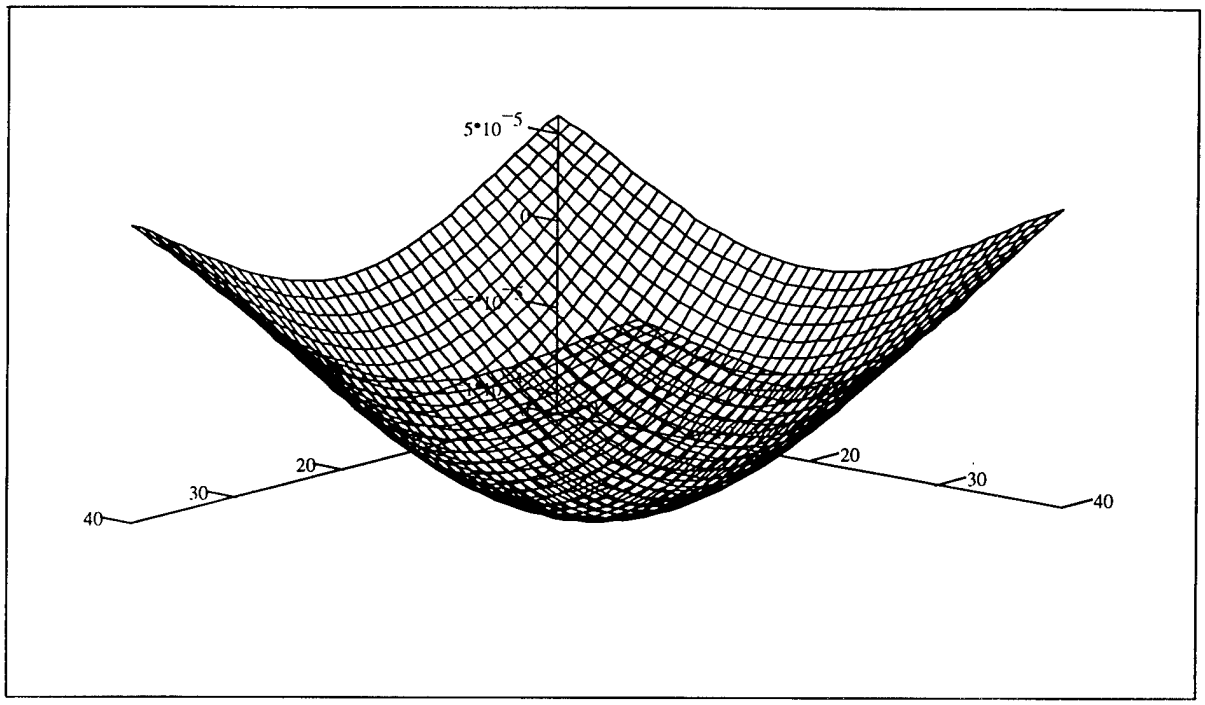

def

$$\text{deflec}(r) := -\left[\frac{q\cdot a^4}{64\cdot K}\cdot\left(1-\frac{r^2}{a^2}\right)\cdot\left(\frac{5+v}{1+v}-\frac{r^2}{a^2}\right)\right] \qquad m1 := \left(\frac{q\cdot a^4}{64\cdot K}\right)\cdot\frac{1}{a^4} \qquad m2 := \left(\frac{q\cdot a^4}{64\cdot K}\right)\cdot\left(\frac{5+v}{1+v}+1\right)\cdot\frac{1}{a^2} \qquad m3 := \left(\frac{q\cdot a^4}{64\cdot K}\right)\cdot\left(\frac{5+v}{1+v}\right)$$

$m1 = 0.253$ $\qquad m2 = 0.014$ $\qquad m3 = 1.116\cdot 10^{-4}$

$r = 0, .005 .. 1$

Polynomial fit for optics program --> $z(r) := \left(-m3 + m2\cdot r^2\right) - m1\cdot r^4$

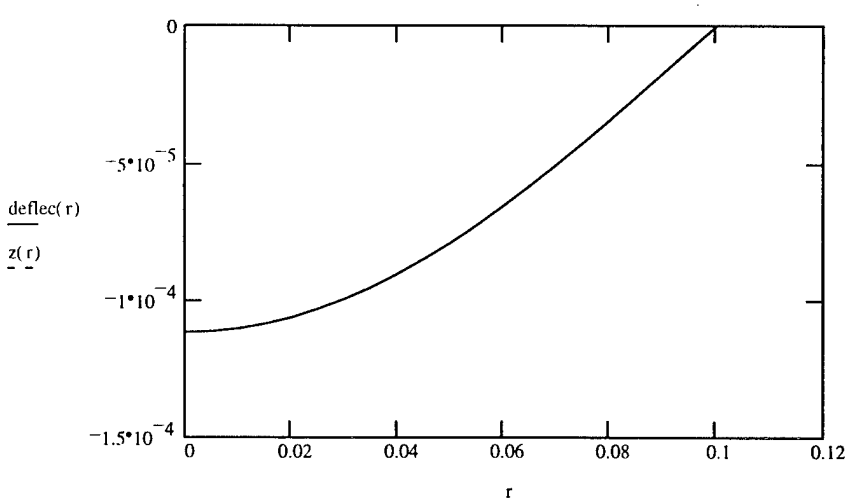

All deflection and associated equations come from Handbook of Engineering Mechanics by Edward Flugge, 1961 and can be found in the Engineering library at MSU

APPENDIX II

Checking silica plate minimum thickness from equation given by Tony Young at U of Hawaii (http://kupono.ifa.hawaii.edu)

$D := 200$ Window diameter

$P := 101.3 \cdot 10^3$ Atmospheric pressure (or pressure gradient across window due to vacuum inside and atmosphere outside)

$M := 41 \cdot 10^6$ Modulus of Rupture (Actually, this is the MEAN modulus of rupture for soda-lime-silica float glass, which has very similar rigidity properties to normal fused silica [i.e. almost exactly the same Young's Modulus])

$SF := 4$ Safety Factor

$K := 1.125$ Constant given by Young for unclamped window boundary condition

$$thickness := D \cdot \sqrt{SF \cdot \frac{K}{4} \cdot \frac{P}{M}}$$

thickness = 10.544 mm

$M := 27.3 \cdot 10^6$ Using a different Modulus of Rupture value found for fused silica on a different web page.

$$thickness := D \cdot \sqrt{SF \cdot \frac{K}{4} \cdot \frac{P}{M}}$$

thickness = 12.922 mm

$SF := 2$ Lower safety factor

$$thickness := D \cdot \sqrt{SF \cdot \frac{K}{4} \cdot \frac{P}{M}}$$

thickness = 9.137 mm

Conclusion: The minimum thickness needed for the silica window to ensure that it won't shatter under atmospheric pressure depends on the exact modulus of rupture for the exact silica that ends up being used, as well as the safety factor one chooses to apply. According to the previous calculations, the safest thing to do would be to get a window no thinner than 15 mm. The most practical thing to do would be to find out from a given company what the modulus of rupture is for THEIR silica, then calculate the minimum thickness necessary for our 200mm window with whatever safety factor you want ot use, THEN find out if that company makes windows of a little greater than the calculated minimum thickness.

SPARTAN IR CAMERA FOR THE SOAR TELESCOPE

Optical Elements: End Deflections

Edwin D. Loh
Daniel E. Polsgrove

Department of Physics & Astronomy
Michigan State University, East Lansing, MI 48824

Loh@pa.msu.edu 517 353–4869

16 Aug 1999

1. Problem Definition

There will be 11 individual optical elements (mirrors, lenses, etc) mounted on the optical bench of the Spartan IR Camera. During use, the optical bench will normally be horizontal to the ground, so the vertically mounted optical elements will not suffer any appreciable positional changes due to gravity. However, at times the entire camera may rotate and the optical bench may be found in the upright position (illustrated below). In this configuration, the optical elements mounted on the bench will droop down at their ends due to gravity. If this drooping (a.k.a. deflection) makes a significant enough angle between the element's end and perfectly horizontal, the light coming into that element will be disrupted from its proper course and consequently undermine the camera's effectiveness.

Calculate the angular deflection of an optical element in the upright position (θ in Figure 1) and determine whether that deflection will significantly effect the camera's operation.

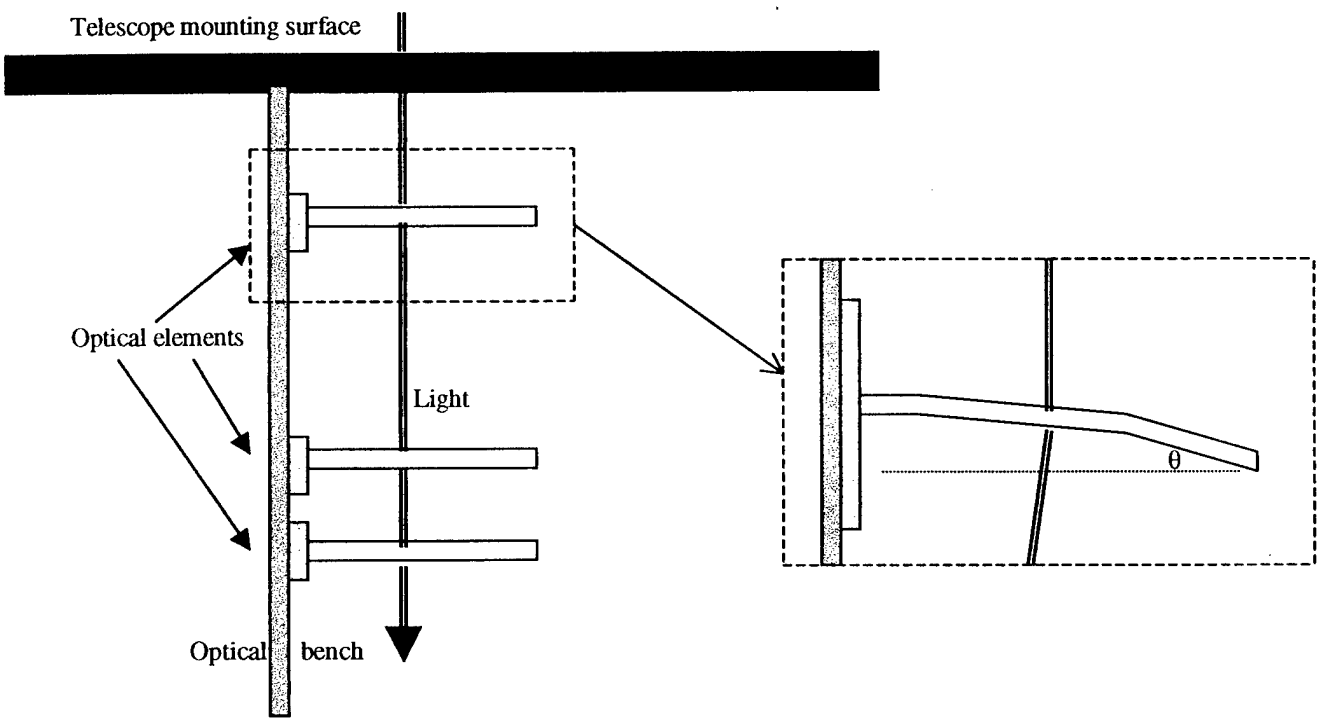

Figure 1. Optical bench and elements rotated 90° from the horizontal.

2. Assumptions and criteria

2.1. The optical elements are made of silica.

2.2. The total mass of all optical elements is estimated to be 75 kg, so the mass of an individual element will be taken as 75/11 = 6.8 kg.

2.3. The exact shape of the optical elements is not known (some may be circular, some rectangular, etc), so we will assume for simplicity that each is square.

2.4. The estimated size of an optical element is 20cm wide x 20cm tall x 2cm thick.

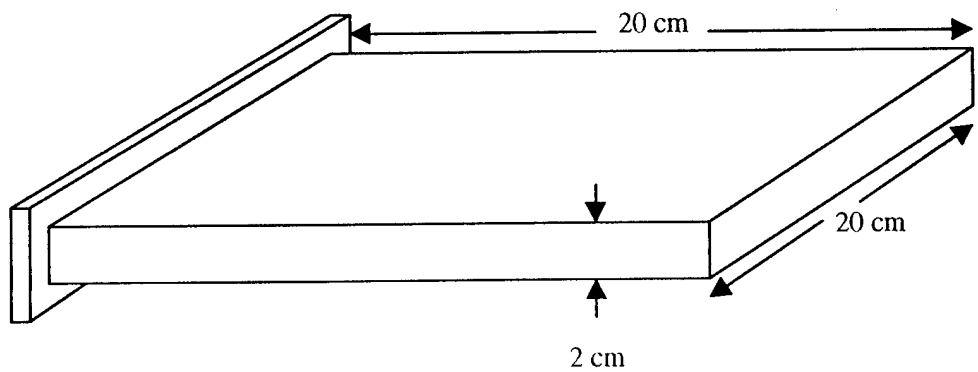

Figure2. Optical element assumed shape and dimensions.

2.5. Each optical element must be secured to the bench by some sort of base structure and screws, but we will ignore any contributions from these base structures to the mass of the optical element.

2.6. An angular deflection exceeding 5 arcseconds will significantly effect the light's path.

3. Results

3.1. The calculations are shown in Appendix I.

3.2. The angular deflection of the optical element end was found to be just larger than 7 arcseconds; unacceptable according to the criteria stated in Section 2.

3.3. There are probably several ways to correct this problem, one of which is to revise the elements' base structures by adding side supports. Calculations in the Appendix show that adding 4 cm long side supports should reduce the angular deflection to just under the critical value of 5 arcseconds. The reason this should work is because adding side supports (as can be seen on the next page in Figure 3) reduces the effective area of the element being pulled down by gravity.

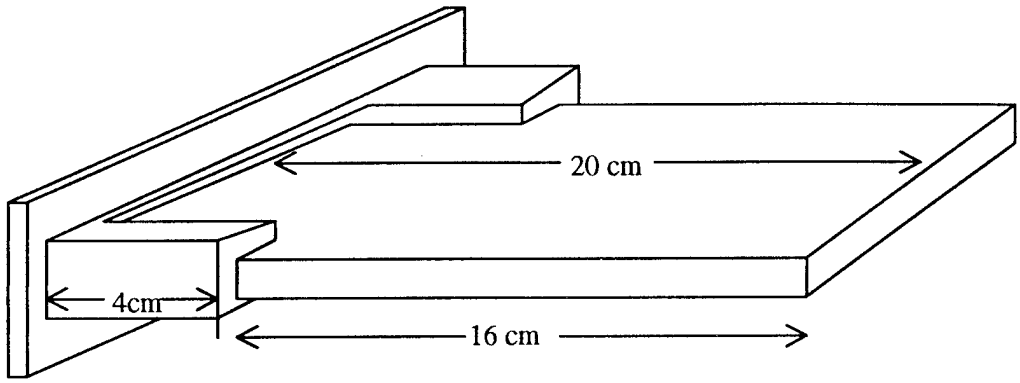

Figure 3. Revised base structure with side supports

3.4. There is a distinct drawback to this solution: manufacturing a base mounting structure of this shape will probably be rather difficult. And manufacturing this sort of base structure for odd-shaped (non-square) optical elements will be additionally tough. Further brainstorming may lead to a simpler solution.

References

Popov, Egor. Introduction to Mechanics of Solids, 1968.

APPENDIX I

Calculations (via MathCad worksheet)

$E := 73 \cdot 10^9$ Fused silica Young's modulus (N/m^2)

$v := .17$ Fused silica poisson's ratio

$a := .2$ plate width (m) $\quad$ $length := .2$

$t := .02$ plate thickness (m)

The optical element is essentially a solid rectangular box and will be modeled as a rectangular beam with one end clamped and the other end free (i.e., cantilever beam boundary conditions).

$I := \frac{a \cdot t^3}{12}$ moment of inertia (m^4)

$accel := 9.81$ gravitational acceleration (m/s^2)

$mass := 6.8$ mass of an individual optical element (kg)

$F := mass \cdot accel$ $\quad$ $F = 66.708$ $\quad$ Downward force on the optical element (N)

$P := \frac{F}{length}$ $\quad$ $P = 333.54$ $\quad$ Pressure on the optical element (modeled as uniform over the entire top surface of the element) (N/m)

$maxdef := \frac{P \cdot length^4}{8 \cdot E \cdot I}$ $\quad$ $maxdef = 6.854 \cdot 10^{-6}$ $\quad$ Maximum deflection (in meters, occurring at the end)

$def(x) := -\left[\frac{P}{24 \cdot E \cdot I} \cdot length \cdot \left(x^4 - 4 \cdot length^3 \cdot x + 3 \cdot length^4\right)\right]$ $\quad$ $x := 0, .005 .. length$

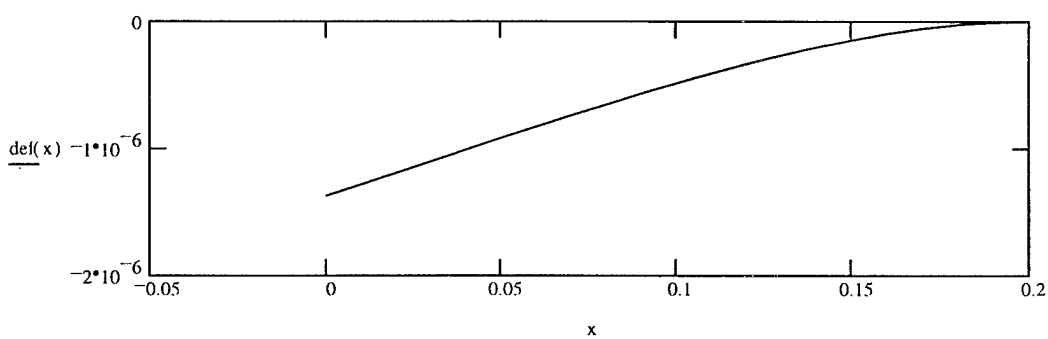

Side view of deflection

deflection angle of the end with respect to the clamped edge...

$theta\_rad := atan\left(\frac{maxdef}{length}\right)$ $\quad theta\_rad = 3.427 \cdot 10^{-5}$ deflection angle in radians

$theta\_deg := \frac{theta\_rad \cdot 360}{2 \cdot \pi}$ $\quad theta\_deg = 1.963 \cdot 10^{-3}$ deflection angle in degrees

$theta\_deg \cdot 60 \cdot 60 = 7.068$ deflection angle in arcseconds (close, but slightly > 5 arcseconds)

This result shows that something must be done to reduce the angular deflection the optical elements will suffer when the optical bench is rotated 90 degrees from the horizontal. The seemingly most practical idea would be to design a base structure that provides some side support in addition to just attaching the one end of the element to the bench (see Figure 3 in Section 3). The side supports will essentially reduce the length of the element thereby reducing the amount of area being pulled down by gravity which will ultimately decrease the angular deflection at the end. Below are calculations showing how much of the side edges must be supported in order to reduce the end angular deflection below 5 arcseconds. We will assume the entire original mass of the element is still at work creating the deflection, even though probably just the portion hanging free beyond the side supports will come into play. This will just generate a sort of built-in safety factor.

$E := 73 \cdot 10^9$ Fused silica Young's modulus (N/m^2)

$v := .17$ Fused silica poisson's ratio

$a := .2$ plate width (m)

$length := .16$ This value was decreased from 0.2 until the angular deflection calculated below came out to be less than 5 arcseconds.

$t := .02$ plate thickness (m)

The optical element is essentially a solid rectangular box and will be modeled as a rectangular beam with one end clamped and the other end free (i.e., cantilever beam boundary conditions).

$I := \frac{a \cdot t^3}{12}$ moment of inertia (m^4)

$accel := 9.81$ gravitational acceleration (m/s^2)

$mass := 6.8$ mass of an individual optical element (kg)

$F := mass \cdot accel$ $\quad F = 66.708$ Downward force on the optical element (N)

$P := \frac{F}{length}$ $\quad P = 416.925$ Pressure on the optical element (modeled as uniform over the entire top surface of the element) (N/m)

$$maxdef := \frac{P \cdot length^4}{8 \cdot E \cdot I}$$ $maxdef = 3.509 \cdot 10^{-6}$ Maximum deflection (in meters, occurring at the end)

$$def(x) := -\left[\frac{P}{24 \cdot E \cdot I} \cdot length \cdot \left(x^4 - 4 \cdot length^3 \cdot x + 3 \cdot length^4\right)\right]$$ $x := 0, .005 .. length$

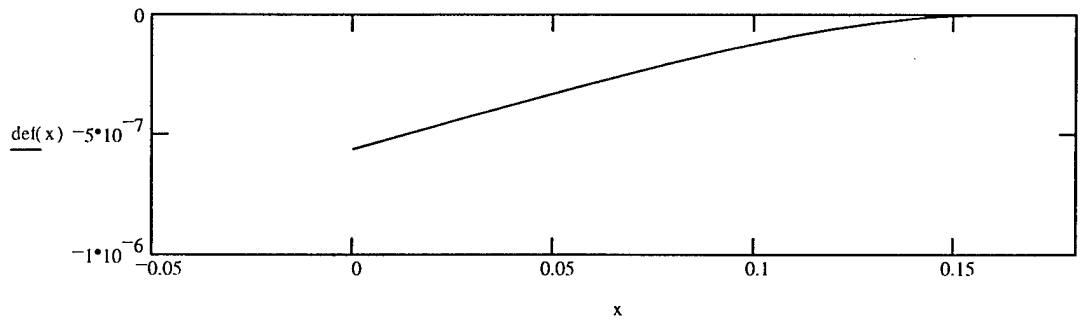

Side view of deflection

deflection angle of the end with respect to the clamped edge...

$$theta\_rad := atan\left(\frac{maxdef}{length}\right)$$ $theta\_rad = 2.193 \cdot 10^{-5}$ deflection angle in radians

$$theta\_deg := \frac{theta\_rad \cdot 360}{2 \cdot \pi}$$ $theta\_deg = 1.257 \cdot 10^{-3}$ deflection angle in degrees

$theta\_deg \cdot 60 \cdot 60 = 4.524$ deflection angle in arcseconds

According to these calculations, building side supports 4 cm up the edge of the element will reduce the end angular deflection to an acceptable level.

SPARTAN IR CAMERA FOR THE SOAR TELESCOPE

Liquid Nitrogen Reservoir/Optical Bench: Design A

Edwin D. Loh
Daniel E. Polsgrove

Department of Physics & Astronomy
Michigan State University, East Lansing, MI 48824

Loh@pa.msu.edu 517 353–4869

16 Aug 1999

1. Problem Definition

The space available on the SOAR telescope for the Spartan IR camera instrumentation is an area 1 x .75 x .75 meters.

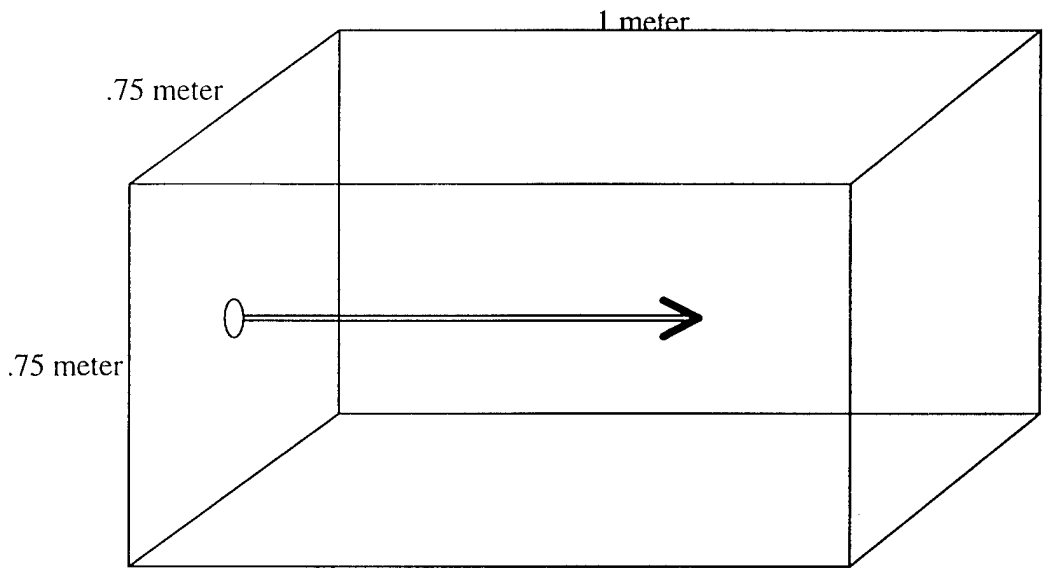

Figure 1. Spartan IR camera: space available.

Light from the telescope enters along the long axis of the 3-D rectangular area. The light must pass through the center of eleven individual optical elements (mirrors, lenses, etc.), so they must be aligned in the light's plane. Additionally, these optical elements must be kept cool by way of contact with a certain volume of liquid nitrogen (temperature = 77 K). This volume of liquid nitrogen must also be contained within the boundaries of the space pictured in Figure 1. Furthermore, the optical elements must not change from their original position by more than a certain fraction of the wavelength being observed at. Anything more than a slight misalignment will significantly affect the data collecting capabilities of the instrument.

2. Assumptions and criteria

2.1. The structures used to contain the liquid nitrogen and support the optical elements (a.k.a. the optical bench) will be made of aluminum.

2.2. The total mass of the structure must not exceed 120 kg; and as always, the lighter the better.
2.3. The optical bench surface must remain almost perfectly flat; under it's own weight and the weight of optical elements on top. Any angular deflection greater than 5 arcseconds is unacceptable.
2.4. The entire space shown in Figure 1 will be under vacuum conditions when the instrument is being used.
2.5. The liquid nitrogen (LN2) container must be able to hold 30 lbs (18.2 kg) of LN2 and also have a vent leading *outside* the vacuum region.

3. Background

The initial design called for making a single box that would contain the liquid nitrogen inside while allowing for optical elements to be mounted on its top. This was the preferred design because of its simplicity. However, with this design, the inside of the box would be subjected to atmospheric pressure (15 psi) because of the necessary vent leading from the LN2 storage area to the outside. Since the inside of this box would be at 15 psi while the outside would remain at 0 psi in vacuum, the top of the box (optical bench) would bow out significantly due to the pressure difference. Calculations showed that the angular deflection caused by this "bowing out" would be over 100 arcseconds.

This deviation from flatness is unacceptable. To remedy this problem, the basic idea is to separate the optical bench from the LN2 box. This way, we can pursue structures that keep the optical bench flat without having to deal with the annoyance of a 15 psi pressure gradient. The structural design described in the remainder of this paper is one of several designs developed for meeting the criteria stated in Section 2. The other designs are presented in separate papers similar to this one. Here, the optical bench is essentially five T-shaped beams joined together side by side. The T-beams are each clamped to the telescope mounting panel at one end, and free at the other end. The liquid nitrogen reservoir box is positioned at the top of the available space, more than 20 cm above the top surface of the optical bench. Illustrations of this design are provided first, followed by calculations to show its compliance with the criteria stated in Section 2.

4. Design Illustrations

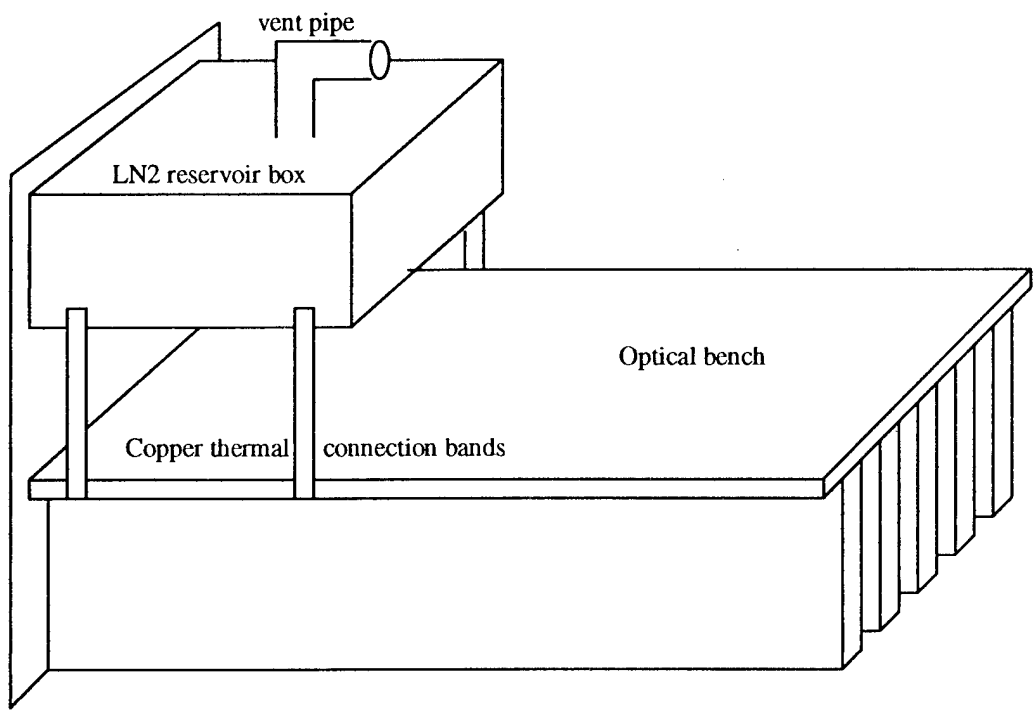

Figure 2a. 3-D view.

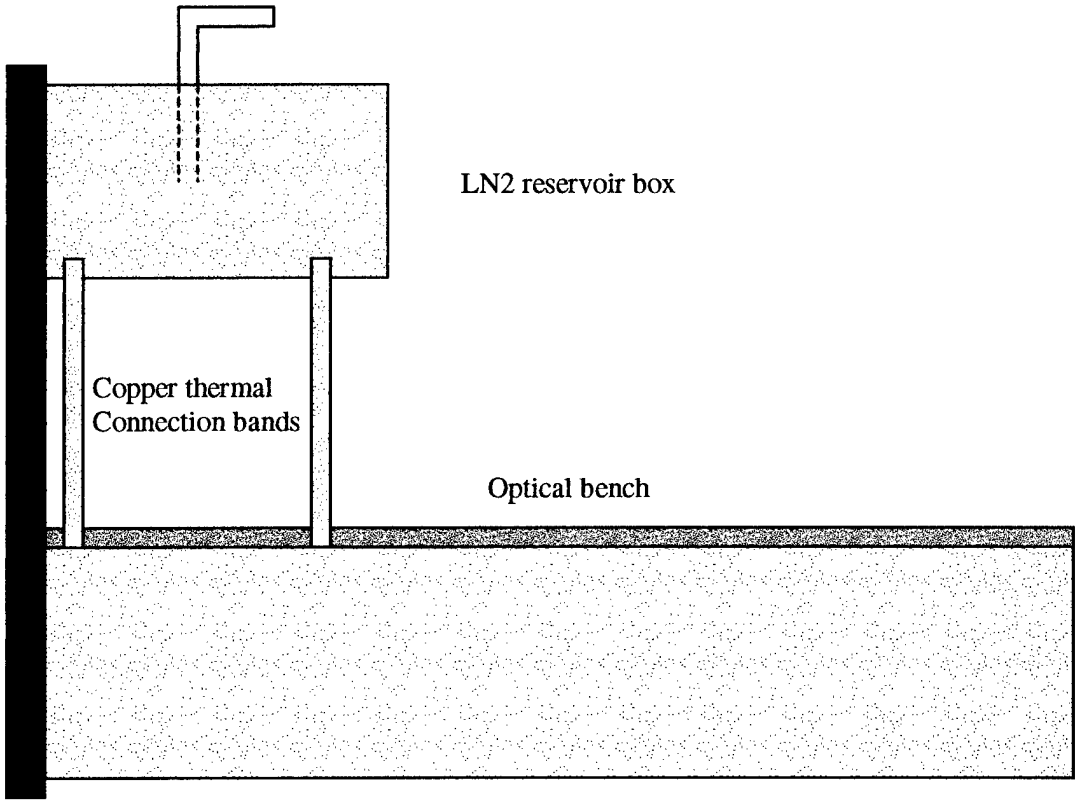

Figure 2b. Side view.

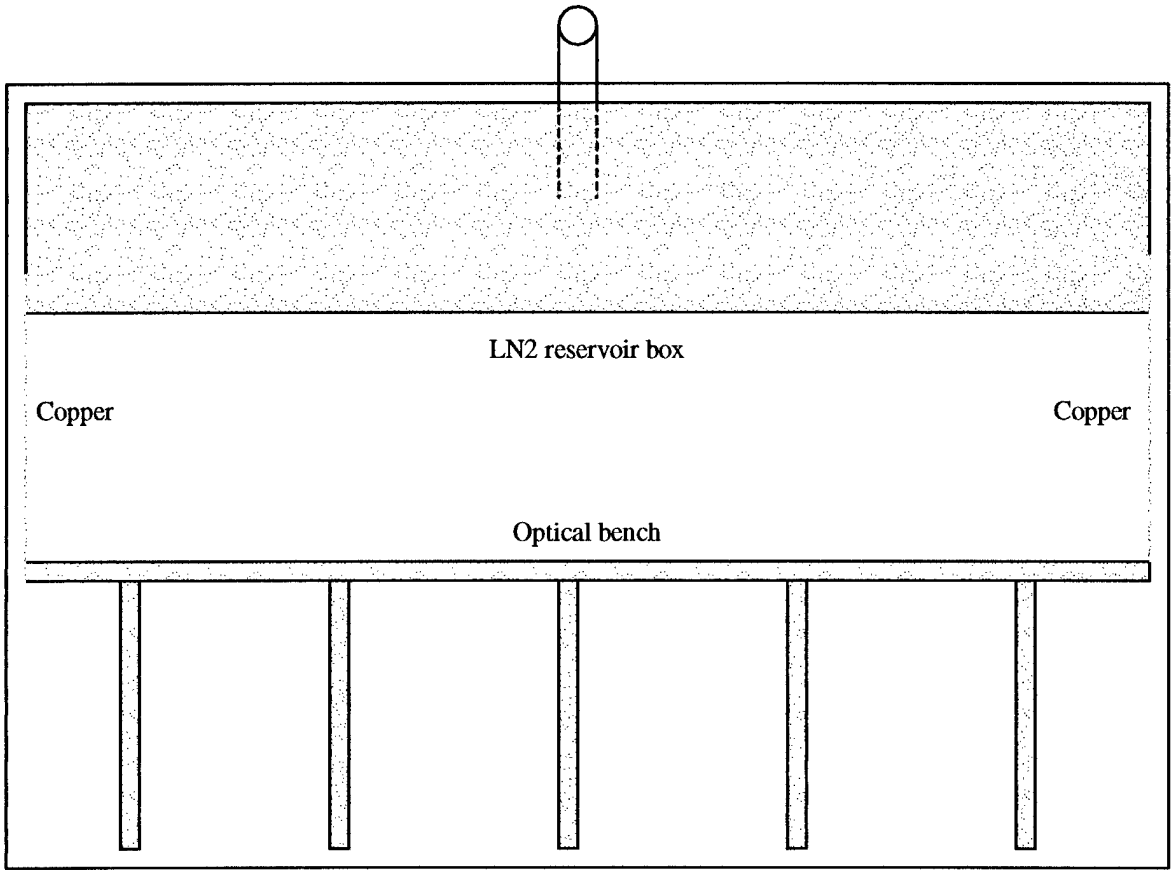

Figure 2c. End view.

5. Calculations (Shown here via MathCad worksheet)

The sequence of calculations necessary to find the optical bench dimensions that limit the bench's end deflection to less than 5 arcseconds are as follows:

1. Model the entire optical bench as 5 T-shaped beams connected side by side, and find the moment of inertia for these T-beams.

2. Find the mass of an individual T-beam (and combine this with 1/5 the total mass of optical elements that will be mounted on top of the optical bench) to define the force and consequently pressure pushing down on each individual T-beam.

3. Determine the maximum deflection (occuring at the end opposite the end that's clamped to the telescope).

4. Calculate the angular deflection of the end of the T-beam by finding the arctangent of the maximum deflection divided by the length of the beam (1 meter).

$dens := 2700$ Density of Aluminum (kg/m^3)

$accel := 9.81$ Gravitational acceleration (m/s^2)

$E := 70 \cdot 10^9$ Young's Modulus for Aluminum (Pa)

T-beam moment of inertia calculations:

$length := 1$

$B := .15$

$b := .14$

$d := .004$

$H := .24$

$a := B - b \qquad a = 0.01$

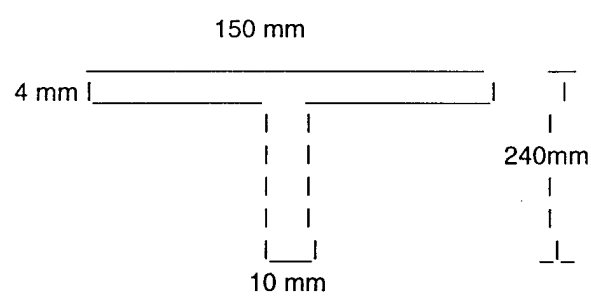

$$c1 := \frac{1}{2} \cdot \left(\frac{a \cdot H^2 + b \cdot d^2}{a \cdot H + b \cdot d} \right) \qquad c1 = 0.098 \qquad c2 := H - c1 \qquad c2 = 0.142$$

$h := H - d - c2 \qquad h = 0.094$

This moment of inertia equation comes from Handbook of Mechanics, Materials & Structures by Alexander Blake, 1985)

$$I\_t := \frac{1}{3} \cdot \left(B \cdot c1^3 - b \cdot h^3 + a \cdot c2^3 \right) \qquad I\_t = 1.784 \cdot 10^{-5}$$ T-beam moment of inertia (m^4)

$$m\_tbeam := B \cdot H \cdot length \cdot dens - \left[\frac{b}{2} \cdot (c2 + h) \cdot length \cdot dens\right] - \left[\frac{b}{2} \cdot (c2 + h) \cdot length \cdot dens\right]$$

$m\_tbeam = 7.992$ Mass of each of the 5 individual T-beams (kg)

$m\_optics := \frac{75}{5}$ Mass of optical elements mounted on top of the T-beam (kg), assuming the elements are uniformaly distributed over the whole bench surface so that each of the 5 individual T-beams is responsible for supporting 1/5 of the total weight.

$F := (m\_tbeam + m\_optics) \cdot accel$ $F = 225.552$ Force on individual T-beam (N)

$q := \frac{F}{length}$ Pressure on each individual T-beam [Force/length: N/m] (uniform distribution assumed)

$max\_def := \frac{q \cdot length^4}{8 \cdot E \cdot I\_t}$ $max\_def = 2.257 \cdot 10^{-5}$ Maximum deflection (in meters)

$maxangle\_rad := atan\left(\frac{max\_def}{1}\right)$ $maxangle\_rad = 2.257 \cdot 10^{-5}$ Maximum deflection (in radians)

$maxangle\_deg := maxangle\_rad \cdot \frac{360}{2 \cdot \pi}$ $maxangle\_deg = 1.293 \cdot 10^{-3}$ Maximum deflection (in degrees)

$maxangle\_arcsec := maxangle\_deg \cdot 60 \cdot 60$ $maxangle\_arcsec = 4.656$ Maximum deflection (in arcseconds) Under 5 arcseconds, as necessary.

$benchmass := m\_tbeam \cdot 5$ $benchmass = 39.96$ Total mass of the optical bench (kg)

This result is only valid under the assumption that all of the optical elements will be mounted in such a way that their bases are resting on a portion of the bench with at least one (if not two) vertical support ribs underneath. This situation is illustrated on the next page.

If the optical element bases DO NOT span a portion of the bench with ribs underneath, there exists a real possibility for unacceptable deflections in these areas. Calculations in the next portion of this section determine the T-beam dimensions necessary to make an optical bench rigid enough to avoid unacceptably large deflections in these inbetween-support-rib regions. These calculations will be undertaken modeling the inbetween regions as flat rectangular aluminum plates with the following boundary conditions: one short edge free, the other three edges simply supported. They will be made assuming probably the worst case scenario; an individual inbetween-rib region has three optical elements mounted on it without their bases spanning any neighboring support ribs. This situation is also illustrated on the next page.

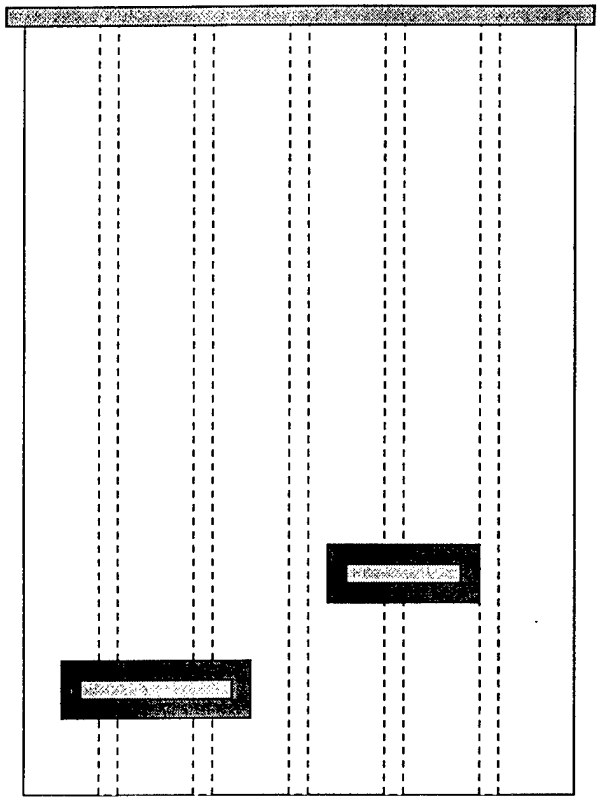

Top view: Bases span underlying ribs.

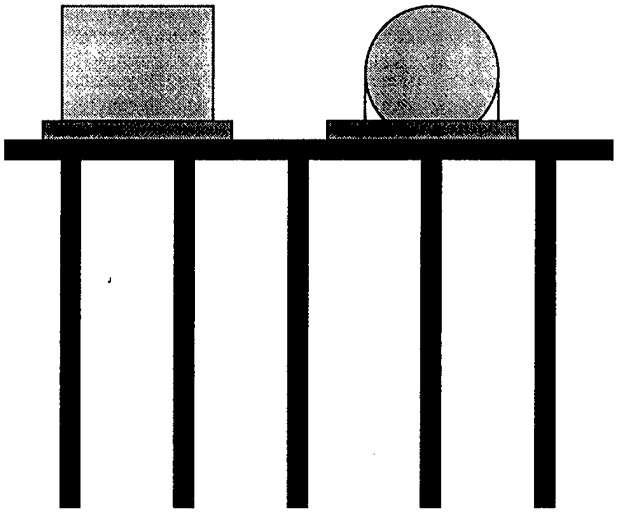

Side view: Bases span underlying ribs.

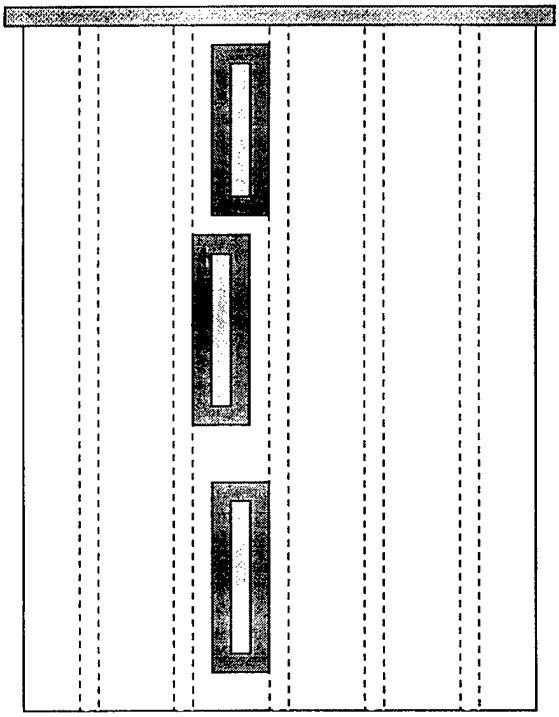

Top view: Bases don't span underlying ribs.

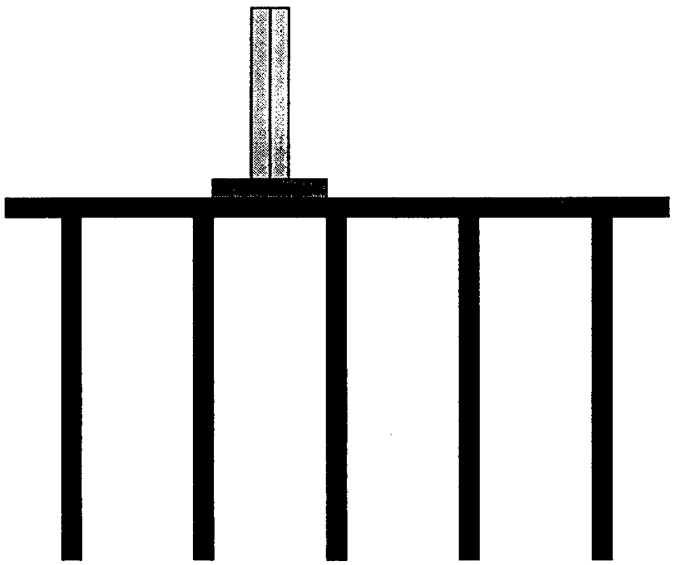

Side view: Bases don't span underlying ribs.

$M\_optics := 75$ Total mass of the optics mounted on the bench (kg)

$Num\_optics := 11$ Number of individual optical elements that will be on the bench

$M\_element := \frac{M\_optics}{Num\_optics}$ $M\_element = 6.818$ Mass of an individual optical element (kg)

$d := .011$ Inbetween-rib, flat rectangular plate thickness (m)

$B := .15$ Inbetween-rib, flat rectangular plate width (m)

$length := 1$ Inbetween-rib, flat rectangular plate length (m)

$M\_plate := dens \cdot d \cdot B \cdot length$ $M\_plate = 4.455$ Mass of the inbetween-rib, flat rectangular plate (kg)

$F := (3 \cdot M\_element + M\_plate) \cdot accel$ $F = 244.363$ Force on the plate (N)

$p := \frac{F}{B \cdot length}$ $p = 1.629 \cdot 10^{3}$ Pressure on the plate (N/m^2) (uniform distribution assumed)

$K8 := .17$ Constant given by Blake for our rectangular plate and boundary conditions

$maxdef := \frac{K8 \cdot p \cdot B^{4}}{E \cdot d^{3}}$ $maxdef = 1.505 \cdot 10^{-6}$ Maximum deflection (in meters)

We know the maximum deflection must occur somewhere along the middle line of the plate, and the nearest edge is the long edge, which is .15/2 meters away, so the greatest angular deflection is found by taking the arctangent of the max deflection divided by this distance to the nearest edge.

$def\_rad := atan\left[\frac{maxdef}{\left(\frac{.15}{2}\right)}\right]$ $def\_rad = 2.006 \cdot 10^{-5}$ Maximum deflection (in radians)

$def\_deg := def\_rad \cdot \frac{360}{2 \cdot \pi}$ $def\_deg = 1.15 \cdot 10^{-3}$ Maximum deflection (in degrees)

$def\_asec := def\_deg \cdot 60 \cdot 60$ $def\_asec = 4.139$ Maximum deflection (in arcseconds)

Now we go back and re-determine the necessary bench dimensions to optimize the deflection vs. minimum mass relationship using this new top surface thickness of 10 mm.

$length := 1$

$B := .15$

$b := .14$

$d := .01$

$H := .22$

$a := B - b \qquad a = 0.01$

```
                150 mm
10 mm |_____________  _____________|     |
                |  |                |
                |  |              220mm
                |  |                |
                |  |                |
                |__|                _|_
                10 mm
```

$$c1 := \frac{1}{2}\cdot\left(\frac{a\cdot H^2 + b\cdot d^2}{a\cdot H + b\cdot d}\right) \qquad c1 = 0.069 \qquad c2 := H - c1 \qquad c2 = 0.151$$

$$h := H - d - c2 \qquad h = 0.059$$

$$I\_t := \frac{1}{3}\cdot\left(B\cdot c1^3 - b\cdot h^3 + a\cdot c2^3\right) \qquad I\_t = 1.832\cdot 10^{-5}$$

T-beam moment of inertia (m^4)

$$m\_tbeam := B\cdot H\cdot length\cdot dens - \left[\frac{b}{2}\cdot(c2 + h)\cdot length\cdot dens\right] - \left[\frac{b}{2}\cdot(c2 + h)\cdot length\cdot dens\right]$$

$m\_tbeam = 9.72$ Mass of each of the 5 individual T-beams (kg)

$F := (m\_tbeam + m\_optics)\cdot accel \qquad F = 242.503$ Force pushing down on individual T-beam (N)

$$q := \frac{F}{length}$$

Pressure pushing down on each individual T-beam [Force/length: N/m]

$$max\_def := \frac{q\cdot length^4}{8\cdot E\cdot I\_t} \qquad max\_def = 2.364\cdot 10^{-5}$$

Maximum deflection (in meters)

$$maxangle\_rad := atan\left(\frac{max\_def}{1}\right) \qquad maxangle\_rad = 2.364\cdot 10^{-5}$$

Maximum deflection (in radians)

$$maxangle\_deg := maxangle\_rad\cdot\frac{360}{2\cdot\pi} \qquad maxangle\_deg = 1.355\cdot 10^{-3}$$

Maximum deflection (in degrees)

$maxangle\_arcsec := maxangle\_deg\cdot 60\cdot 60 \qquad maxangle\_arcsec = 4.876$

Maximum deflection (in arcseconds)
Under 5 arcseconds, as necessary.

$benchmass := m\_tbeam\cdot 5 \qquad benchmass = 48.6$ Total mass of the optical bench (kg)

The total mass of the bench increases from just under 40 kg to just under 50 kg when looking at this worst case scenario of optical element distribution.

The space available above the top of the optical elements mounted on the bench is approximately 30 cm (see final diagram). So, how about using some of this available depth space and shortening the length of the LN2 box that will be mounted up there? (i.e., making the box 20 cm deep x 75 cm wide, how long does it need to be...). Remember, total volume of the box must be greater than .046 m^3 in order to accomodate the 40 lbs of liquid nitrogen along with allowing for the vent pipe end to be inside the LN2 reservoir without ever being submerged in the liquid (see "Liquid Nitrogen Reservoir/Optical Bench: Design C" for this calculation):

$boxlength := \frac{.046}{.2 \cdot .75}$ $\quad boxlength = 0.307$ The box only needs to be a little over 30 cm long.

How much will this box deflect down at the end if only attached by clamped edge boundary condition to the telescope's mounting surface? Only a deflection of greater than about 7 cm will be unacceptable - if this happens, part of the box will interfere with the optics below it and may cause problems.

Calculating deflection looking at side plate as a beam with its own weight plus the LN2 weight, modeled as a uniform pressure pushing down on top of the beam...

Side beam dimensions (meters): $b := .32$ length $t := .2$ thickness $a := .006$ width (i.e. the thickness of each plate used in the box (6 mm))

Assume the pressure pulling down on the box will be due to 1/2 the weight of the entire box, uniformly distributed over the top surface of the side beam. Boundary condition: one end of the beam is clamped, the other end is free.

$I := \frac{a \cdot t^3}{12}$ Beam moment of inertia $\quad boxwidth := .75$

$mtopbottom := dens \cdot b \cdot boxwidth \cdot a \quad mtopbottom = 3.888$

$msides := dens \cdot t \cdot b \cdot a \quad msides = 1.037$

$mends := dens \cdot t \cdot boxwidth \cdot a \quad mends = 2.43$

$mbox := 2 \cdot mtopbottom + 2 \cdot msides + 2 \cdot mends \quad mbox = 14.71$ Mass of the LN2 reservoir box (kg)

total mass of the box + LN2 itself:

$total\_mass := 2 \cdot mtopbottom + 2 \cdot msides + 2 \cdot mends + 18.2 \quad total\_mass = 32.91$

Each side beam must support half this weight: $half\_mass := \frac{total\_mass}{2} \quad half\_mass = 16.455$

$F := half\_mass \cdot accel \quad F = 161.422$ Force on each side beam (N)

Corresponding pressure on top of side beam (N/m): $q := \frac{F}{b} \quad q = 504.442$

$maxdef := \frac{q \cdot b^4}{8 \cdot E \cdot I} \quad maxdef = 2.361 \cdot 10^{-6}$ Maximum deflection (in meters)... way less than 1 cm.

Now determine the bowing out deflection due to pressure inside the LN2 reservoir box (atmospheric pressure; 101.3 x 10^3 Pa) and whether or not this will interfere with the optical elements below.

$p := 101.3 \cdot 10^3$ atmospheric pressure (Pa)

$L := .32$ Width of the LN2 box (m)

$E := 70 \cdot 10^9$

$K7 := .115$ Constant given by Blake for our given top/bottom surface of the box and boundary condition: all 4 edges simply supported.

$h := .006$ Plate thickness of top/bottom surfaces of the box (m)

$maxdef := \frac{K7 \cdot p \cdot L^4}{E \cdot h^3}$ $maxdef = 8.079 \cdot 10^{-3}$ Less than 1cm deflection, no interference will occur.

The total mass of aluminum necessary to build all the parts of this design (bench + LN2 box), assuming the first condition where all optical elements have bases that span one or two underneath support ribs (i.e. ignoring optical bench deflections that may occur in regions between underlying support ribs):

$MASS := 39.96 + mbox$ $MASS = 54.67$

Total mass of the system INCLUDING the liquid nitrogen itself: $MASS + 18.2 = 72.87$

Total mass of aluminum necessary to build all the parts of this design, assuming the second condition where worst case scenario inbetween support rib deflections ARE accounted for:

$MASS := 48.6 + mbox$ $MASS = 63.31$

Total mass of the system INCLUDING the liquid nitrogen itself: $MASS + 18.2 = 81.51$

6. Conclusion

The structural design described here meets all the performance criteria and offers two primary advantages: low total mass and manufacturing simplicity. The total mass of aluminum needed to make all the parts of this structure is somewhere around 60 kg; far less than the 120 kg limit. The main potential disadvantage is the overhanging liquid nitrogen reservoir. Although it only hangs over one-third of the optical bench below it, it may hinder accessibility to that one-third of the bench and make mounting optical elements in that area more difficult. If this design is ultimately used for the Spartan IR camera, two of the more important components that require further investigation are the copper thermal connection bands and the optical element bases. The number, size, and attachment positions of the copper bands must be sufficient to keep the optical bench cool enough to meet the instrument's thermal requirements. Similarly, the size and positioning of the optical element bases must be pursued keeping mass and angular deflection to a minimum. Figure 3 below provides a comprehensive depiction of Design A, including all important measurements (assuming there's no significant deflections on the bench inbetween underlying support ribs, i.e., optical element bases span one or two underlying ribs).

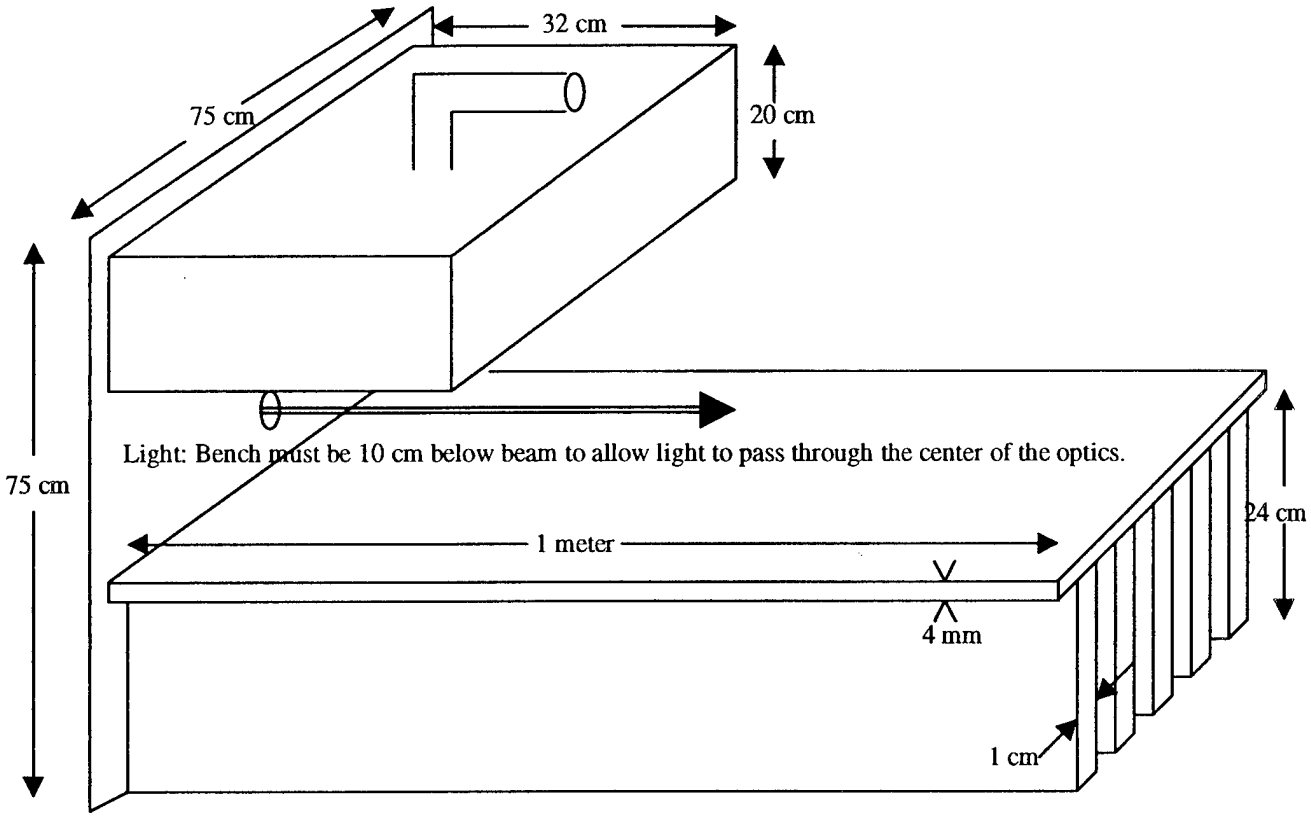

Figure 3. Comprehensive design illustration.

References

Flugge, V. Handbook of Engineering Mechanics, 1961. (Available at MSU Engineering Library: TA 350 .F58).

Blake, Alexander. Handbook of Mechanics, Materials and Structures, 1985. (MSU Engineering Library: TA 350 .H23).

SPARTAN IR CAMERA FOR THE SOAR TELESCOPE

Liquid Nitrogen Reservoir/Optical Bench: Design B

Edwin D. Loh
Daniel E. Polsgrove

Department of Physics & Astronomy
Michigan State University, East Lansing, MI 48824

Loh@pa.msu.edu 517 353–4869

16 Aug 1999

1. Problem Definition

The space available on the SOAR telescope for the Spartan IR camera instrumentation is an area 1 x .75 x .75 meters.

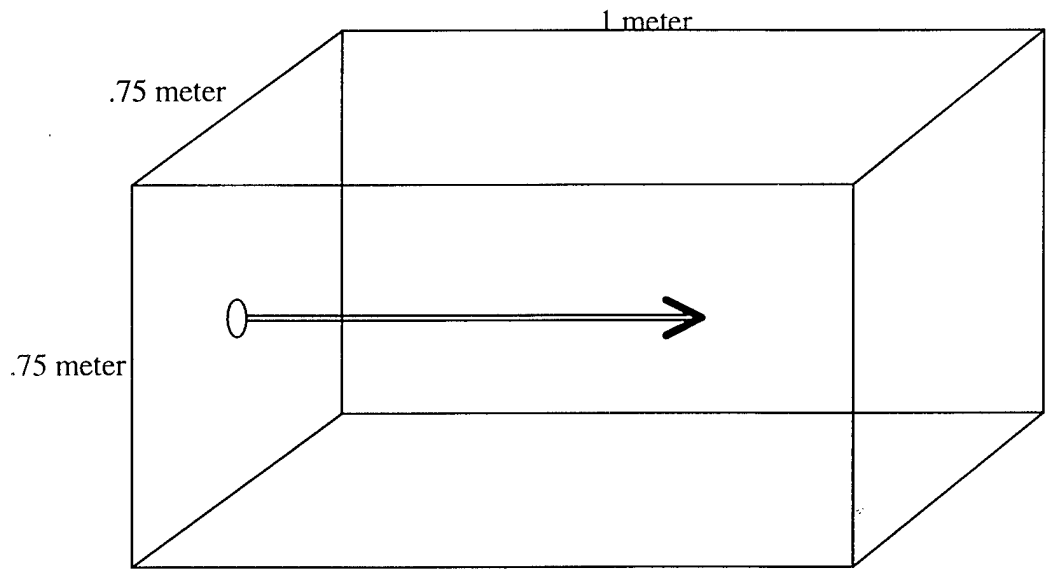

Figure 1. Spartan IR camera: space available.

Light from the telescope enters along the long axis of the 3-D rectangular area. The light must pass through the center of eleven individual optical elements (mirrors, lenses, etc.), so they must be aligned in the light's plane. Additionally, these optical elements must be kept cool by way of contact with a certain volume of liquid nitrogen (temperature = 77 K). This volume of liquid nitrogen must also be contained within the boundaries of the space pictured in Figure 1. Furthermore, the optical elements must not change from their original position by more than a certain fraction of the wavelength being observed at. Anything more than a slight misalignment will significantly affect the data collecting capabilities of the instrument.

2. Assumptions and criteria

2.1. The structures used to contain the liquid nitrogen and support the optical elements (a.k.a. the optical bench) will be made of aluminum.
2.2. The total mass of the structure must not exceed 120 kg; and as always, the lighter the better.
2.3. The optical bench surface must remain almost perfectly flat; under it's own weight and the weight of optical elements on top. Any angular deflection greater than 5 arcseconds is unacceptable.
2.4. The entire space shown in Figure 1 will be under vacuum conditions when the instrument is being used.
2.5. The liquid nitrogen (LN2) container must be able to hold 40 lbs (18.2 kg) of LN2 and also have a vent leading *outside* the vacuum region.

3. Background

The initial design called for making a single box that would contain the liquid nitrogen inside while allowing for optical elements to be mounted on its top. This was the preferred design because of its simplicity. However, with this design, the inside of the box would be subjected to atmospheric pressure (15 psi) because of the necessary vent leading from the LN2 storage area to the outside. Since the inside of this box would be at 15 psi while the outside would remain at 0 psi in vacuum, the top of the box (optical bench) would bow out significantly due to the pressure difference. Calculations showed that the angular deflection caused by this "bowing out" would be over 100 arcseconds.

This deviation from flatness is unacceptable. To remedy this problem, the basic idea is to separate the optical bench from the LN2 box. This way, we can pursue structures that keep the optical bench flat without having to deal with the annoyance of a 15 psi pressure gradient. The structural design described in the remainder of this paper is one of several designs developed for meeting the criteria stated in Section 2. The other designs are presented in separate papers similar to this one. Here, the optical bench is essentially a succession of T-beams stuck side by side, suspended from the top beams of a supporting truss structure. The LN2 box is located below and independent from the optical bench. Illustrations of the design are provided first, followed by calculations to show its compliance with the criteria stated in Section 2.

4. Design Illustrations

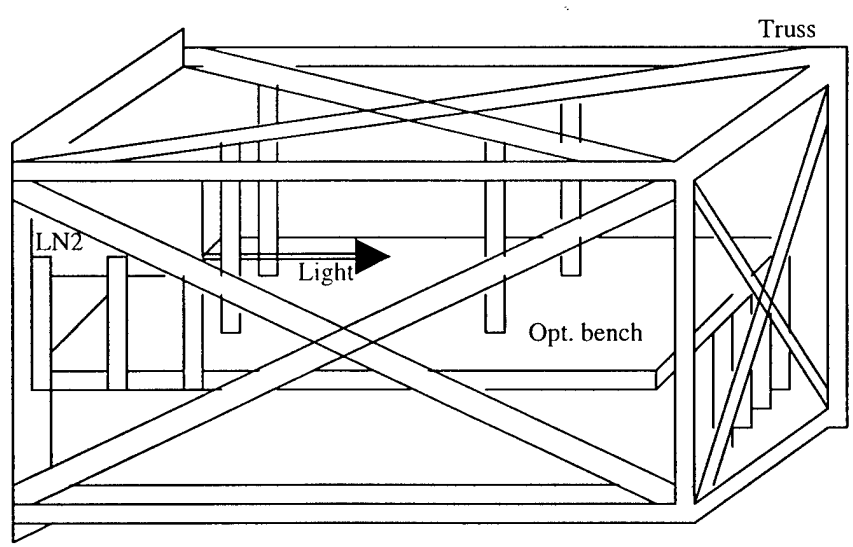

Figure 2a. 3-D view.

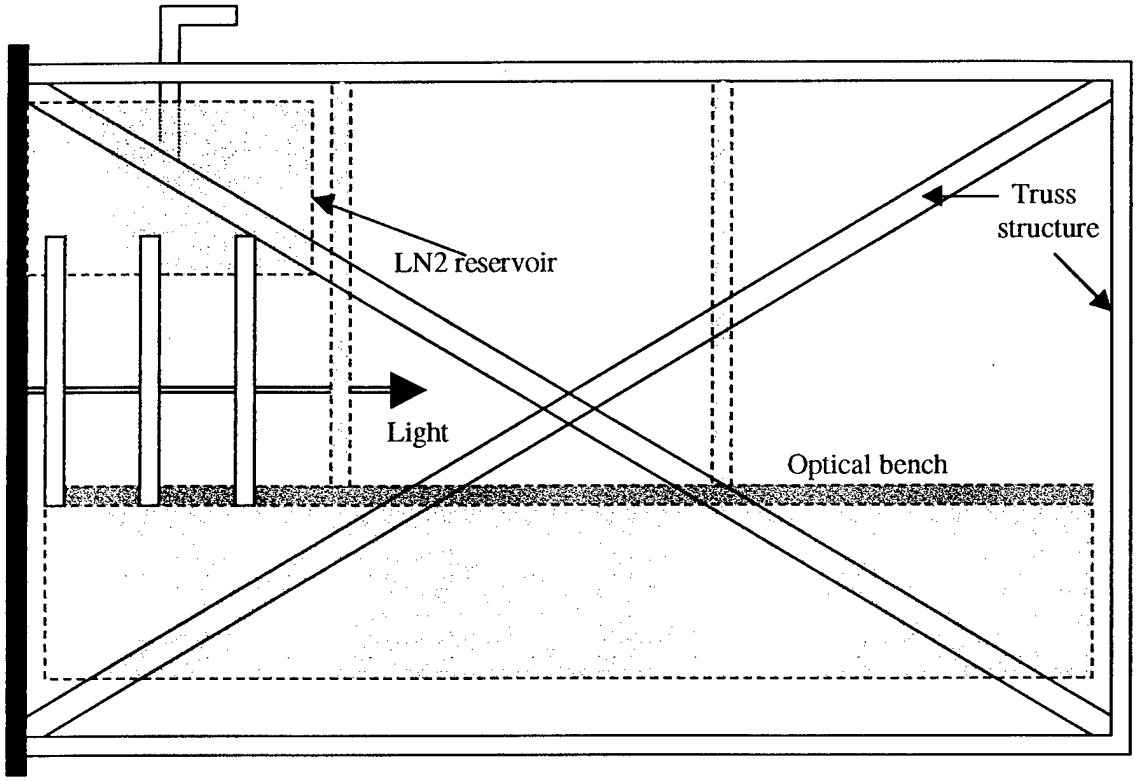

Figure 2b. Side View.

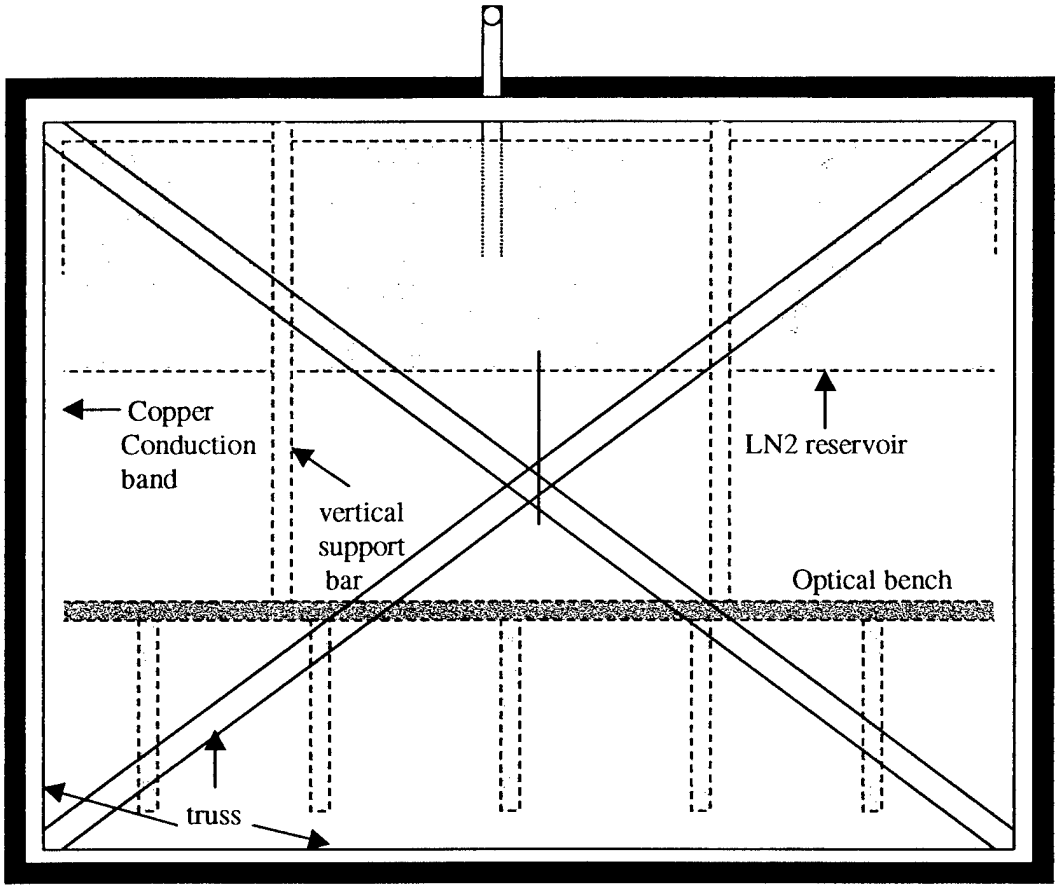

Figure 2c. End view.

5. Calculations (via MathCad worksheet)

As can be seen in the diagrams of Section 4, the optical bench is suspended from the truss structure by four vertical support beams. These beams are positioned such that the bench is essentially divided up into three sections of equal size. Each of these sections is assumed to be 33 cm wide x 75 cm long. Each section is made up of 5 t-beams which are 15 cm wide x 33 cm long. The middle section is subjected to different boundary conditions than the two end sections. For the calculations made in this section, we use the following assumptions:

1. The load of optical elements on top of the optical bench will be uniformly distributed, therefore when we look at the whole bench as a combination of 15 t-beams (each 15 x 33 cm - see Figure 3), each t-beam will support 1/15 of the total weight imparted by optical elements.

2. The boundary condition for each t-beam of the middle section will be both ends simply supported (see Figure 3).

3. The boundary condition for each t-beam of the two end sections will be one end clamped, other end free (see Figure 3).

4. All optical elements mounted on top of the bench will have bases that span an area overlying at least one (if not two) of the support ribs underneath (see Figure 3). This way, problematic deflections that could occur inbetween the underlying support ribs are eliminated. If any optical elements are mounted on the bench without bases that span the underlying ribs, further calculations should be undertaken to ensure there are no unacceptable deflections. (See "Liquid Nitrogen/Optical Bench: Design A" for an example of how to determine inbetween-rib deflections).

5. Deflections greater than 5 arcseconds are unaccpetable. (Maximum deflection will occur halfway between the two ends of the t-beams in the middle section, and will occur at the free end of the t-beams of the two end sections)

Looking at the middle section first:

$E := 70 \cdot 10^9$

$accel := 9.81$

$dens := 2700$

$length := .333$

$B := .15$

$b := .145$

$d := .005$

$H := .08$

$a := B - b \qquad a = 5 \cdot 10^{-3}$

$$c1 := \frac{1}{2} \cdot \left(\frac{a \cdot H^2 + b \cdot d^2}{a \cdot H + b \cdot d} \right) \qquad c1 = 0.016 \qquad c2 := H - c1 \qquad c2 = 0.064$$

$h := H - d - c2 \qquad h = 0.011$

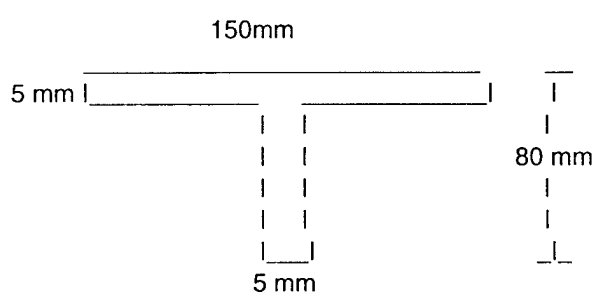

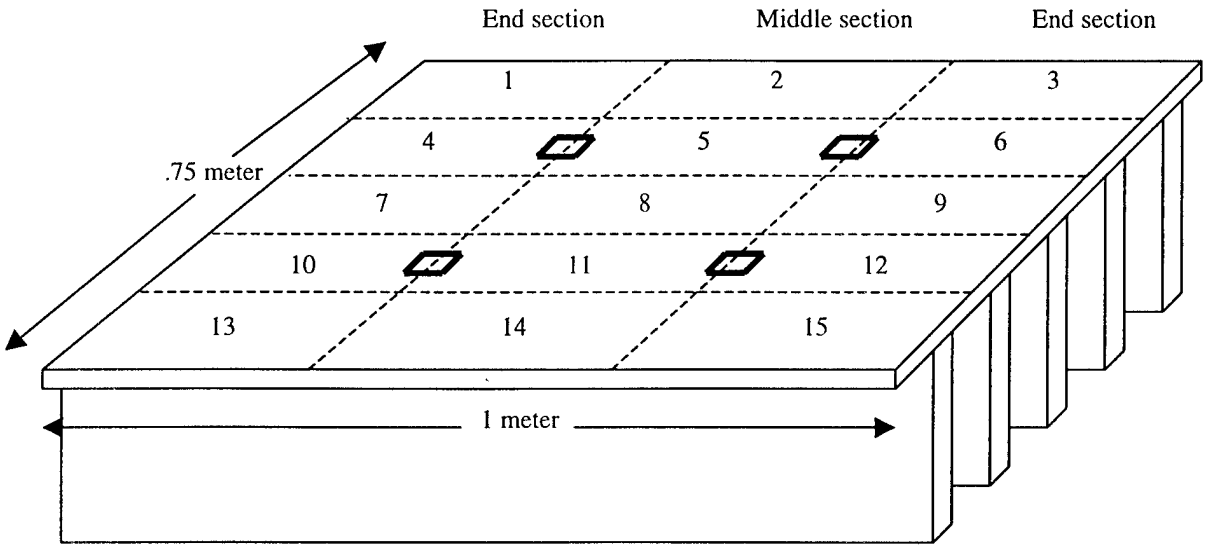

Figure 3a. Optical bench; combination of 15 t-beams together.

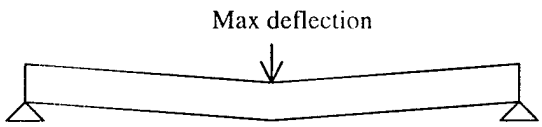

Figure 3b. Middle section (2,5,8,11,14 above) Boundary conditions.

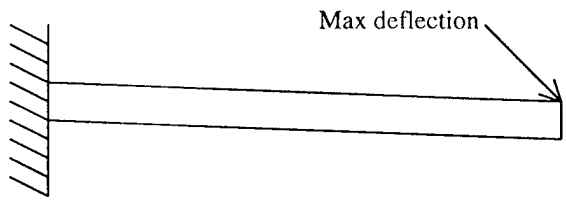

Figure 3c. End sections (1,3,4,6,7,9,10,12,13,15 Above) Boundary conditions.

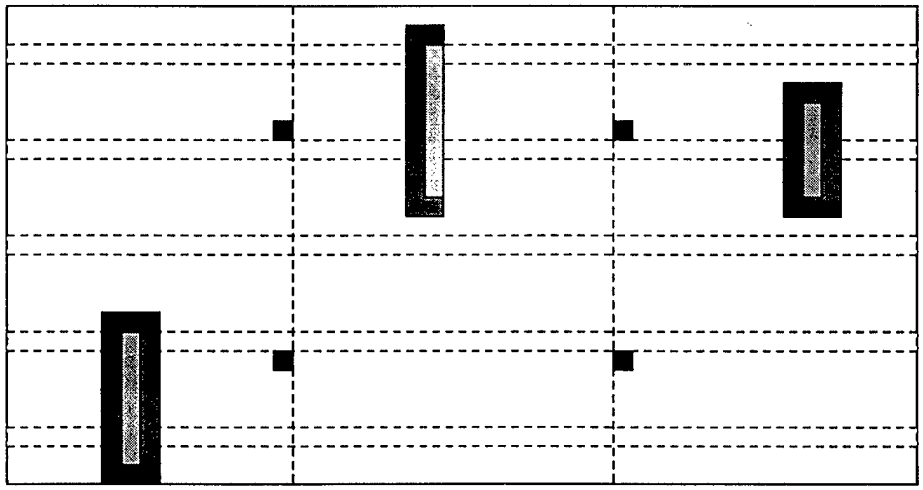

Figure 3d. Optical element bases spanning one or more underlying t-beam supports (ribs).

This moment of inertia equation comes from Handbook of Mechanics, Materials & Structures by Alexander Blake, 1985)

$I\_t := \frac{1}{3}\cdot\left(B\cdot c1^3 - b\cdot h^3 + a\cdot c2^3\right)$ $\quad I\_t = 5.773\cdot 10^{-7}$

$m\_tbeam := B\cdot H\cdot length\cdot dens - \left[\frac{b}{2}\cdot(c2+h)\cdot length\cdot dens\right] - \left[\frac{b}{2}\cdot(c2+h)\cdot length\cdot dens\right]$ $\quad m\_tbeam = 1.011$

Mass of individual T-beam

$m\_optics := \frac{75}{3\cdot 5}$ $\quad m\_optics = 5$

It takes 15 t-beams to make the whole optical bench, so each is responsible for supporting 1/15 of the optics' mass.

$F := (m\_tbeam + m\_optics)\cdot accel$ $\quad F = 58.973$ Force pushing down on individual T-beam

$q := \frac{F}{length}$ $\quad q = 177.095$ Pressure pushing down on individual T-beam [Force/length]

$max\_def := \frac{5\cdot q\cdot length^4}{384\cdot E\cdot I\_t}$ $\quad max\_def = 7.016\cdot 10^{-7}$ Maximum deflection (in meters)

$maxangle\_rad := atan\left[\frac{max\_def}{\left(\frac{length}{2}\right)}\right]$ $\quad maxangle\_rad = 4.214\cdot 10^{-6}$ Maximum deflection (in radians)

$maxangle\_deg := maxangle\_rad\cdot\frac{360}{2\cdot\pi}$ $\quad maxangle\_deg = 2.414\cdot 10^{-4}$ Maximum deflection (in degrees)

$maxangle\_arcsec := maxangle\_deg\cdot 60\cdot 60$ $\quad maxangle\_arcsec = 0.869$ Maximum deflection (in arcseconds)

Now for the two end sections of the bench:

$max\_def := \frac{q\cdot length^4}{8\cdot E\cdot I\_t}$ $\quad max\_def = 6.735\cdot 10^{-6}$ Maximum deflection (in meters)

$maxangle\_rad := atan\left(\frac{max\_def}{length}\right)$ $\quad maxangle\_rad = 2.023\cdot 10^{-5}$ Maximum deflection (in radians)

$maxangle\_deg := maxangle\_rad\cdot\frac{360}{2\cdot\pi}$ $\quad maxangle\_deg = 1.159\cdot 10^{-3}$ Maximum deflection (in degrees)

$maxangle\_arcsec := maxangle\_deg\cdot 60\cdot 60$ $\quad maxangle\_arcsec = 4.172$ Maximum deflection (in arcseconds)

$benchmass := 15 \cdot m\_tbeam$ $\qquad benchmass = 15.172$

Keep in mind that these calculations are made assuming there is a perfectly uniform load of the bench weight + optics weight over the entire bench. If the distribution of optical pieces is non-uniform and there is an overabundance of them on one or both of the two ends of the bench, the deflections there might become unacceptably large. To account for this occurence, I'll calculate the bench beam dimensions necessary for accomodating twice the normal load on a single given t-beam:

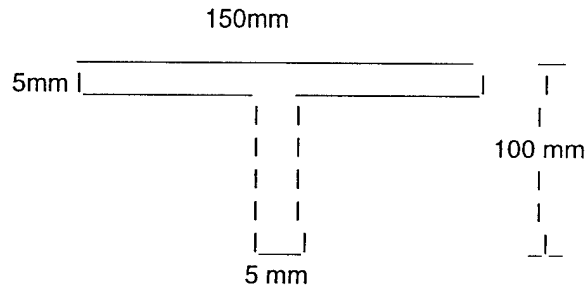

$B := .15$

$b := .145$

$d := .005$

$H := .1$

$a := B - b \qquad a = 5 \cdot 10^{-3}$

$c1 := \frac{1}{2} \cdot \left(\frac{a \cdot H^2 + b \cdot d^2}{a \cdot H + b \cdot d} \right) \qquad c1 = 0.022 \qquad c2 := H - c1 \qquad c2 = 0.078$

$h := H - d - c2 \qquad h = 0.017$

This moment of inertia equation comes from Handbook of Mechanics, Materials & Structures by Alexander Blake, 1985)

$I\_t := \frac{1}{3} \cdot \left(B \cdot c1^3 - b \cdot h^3 + a \cdot c2^3 \right) \qquad I\_t = 1.086 \cdot 10^{-6}$

$m\_tbeam := B \cdot H \cdot length \cdot dens - \left[\frac{b}{2} \cdot (c2 + h) \cdot length \cdot dens \right] - \left[\frac{b}{2} \cdot (c2 + h) \cdot length \cdot dens \right] \qquad m\_tbeam = 1.101$

Mass of individual T-beam

$m\_optics := 10$ Twice the previously assumed load

$F := (m\_tbeam + m\_optics) \cdot accel \qquad F = 108.905$ Force pushing down on individual T-beam

$q := \frac{F}{length} \qquad q = 327.041$ Pressure pushing down on individual T-beam [Force/length]

$max\_def := \frac{5 \cdot q \cdot length^4}{384 \cdot E \cdot I\_t} \qquad max\_def = 6.889 \cdot 10^{-7}$ Maximum deflection (in meters)

$$maxangle\_rad := atan\left[\frac{max\_def}{\left(\frac{length}{2}\right)}\right]$$ $maxangle\_rad = 4.138 \cdot 10^{-6}$ Maximum deflection (in radians)

$$maxangle\_deg := maxangle\_rad \cdot \frac{360}{2 \cdot \pi}$$ $maxangle\_deg = 2.371 \cdot 10^{-4}$ Maximum deflection (in degrees)

$maxangle\_arcsec := maxangle\_deg \cdot 60 \cdot 60$ $maxangle\_arcsec = 0.853$ Maximum deflection (in arcseconds)

Now for the two end sections of the bench:

$$max\_def := \frac{q \cdot length^4}{8 \cdot E \cdot I\_t}$$ $max\_def = 6.613 \cdot 10^{-6}$ Maximum deflection (in meters)

$$maxangle\_rad := atan\left(\frac{max\_def}{length}\right)$$ $maxangle\_rad = 1.986 \cdot 10^{-5}$ Maximum deflection (in radians)

$$maxangle\_deg := maxangle\_rad \cdot \frac{360}{2 \cdot \pi}$$ $maxangle\_deg = 1.138 \cdot 10^{-3}$ Maximum deflection (in degrees)

$maxangle\_arcsec := maxangle\_deg \cdot 60 \cdot 60$ $maxangle\_arcsec = 4.096$ Maximum deflection (in arcseconds)

$benchmass := 15 \cdot m\_tbeam$ $benchmass = 16.521$

Accounting for non-uniform optics mass distribution only increases the necessary bench mass by about 1.5 kg.

We must now look at how much the whole bench will sag down from its initial position due to two factors:

1. The sagging of the horizontal top cross bars of the truss structure where the vertical support bars are attached (see Figure 4).

2. The stretching of the vertical support bars due to the weight of the bench + optical elements pulling down (gravity) (assuming the weight of the bench is equally distributed so that each of the four bars is subjected to the same force) (see Figure 4).

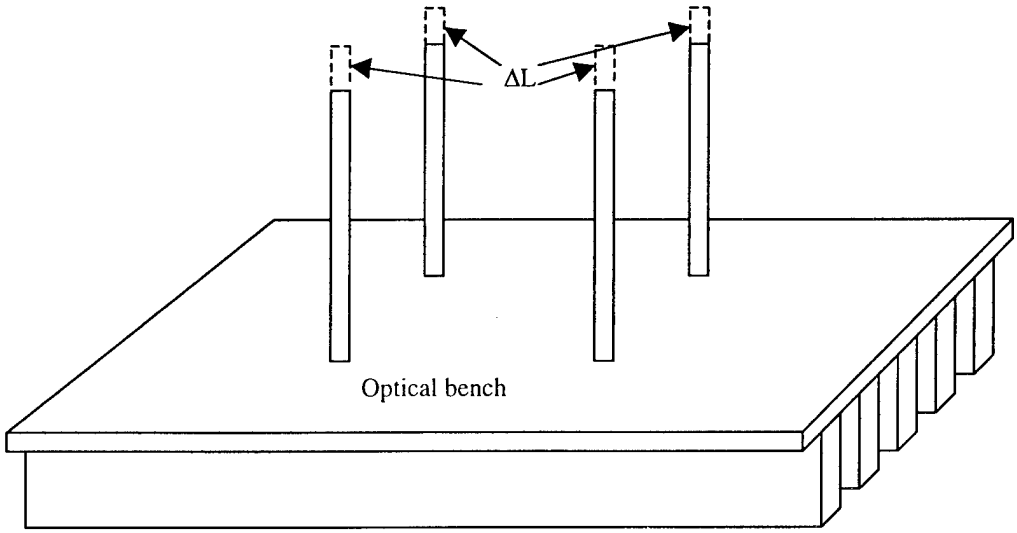

Figure 4a. Vertical support bars stretched due to optical bench load.

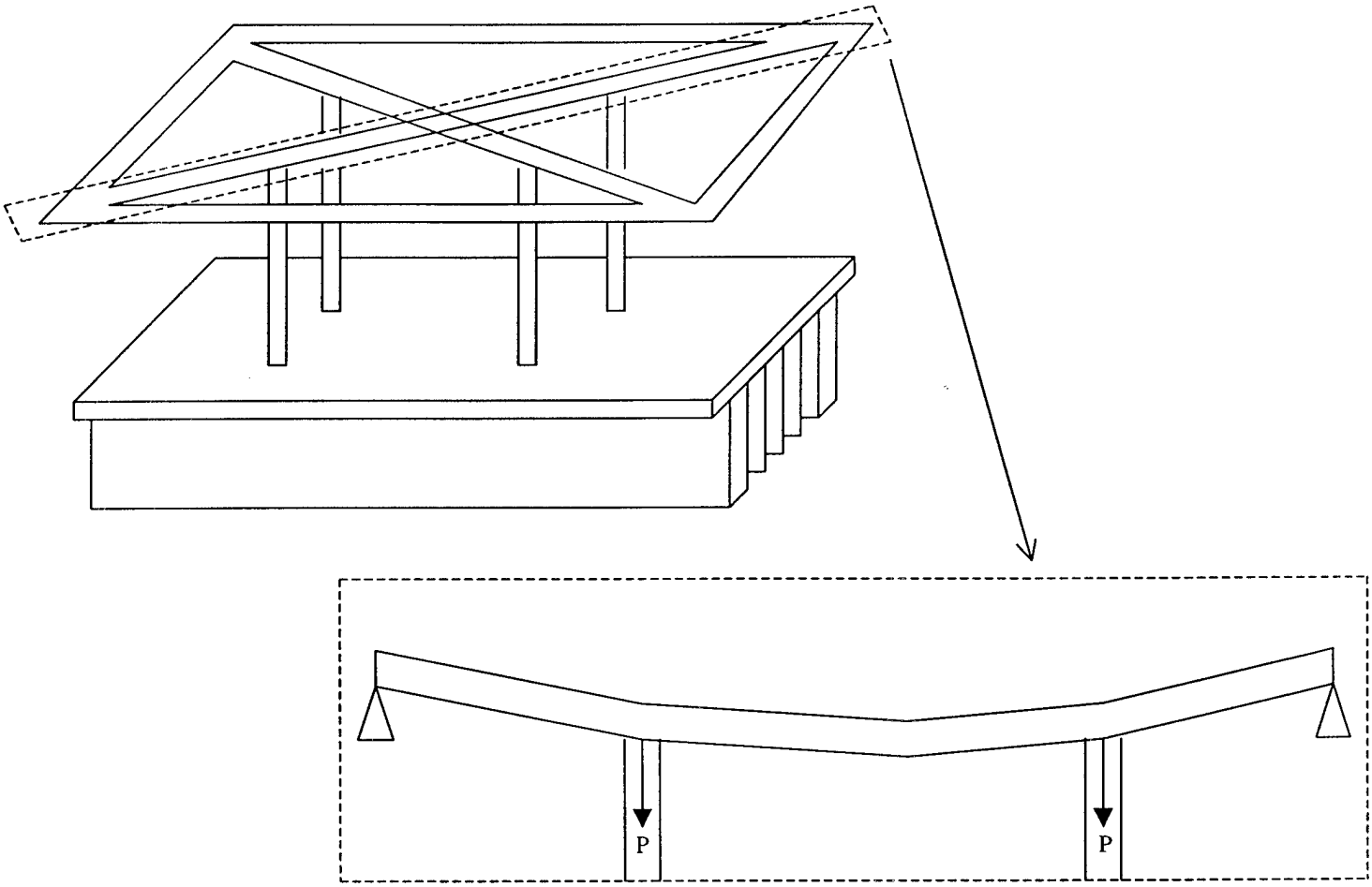

Figure 4b. Truss's top cross bars sagging due to optical bench load.

We'll look at #1 first (depicted in Figure 4b.) Here, we look at each of the top criss-crossed truss beams individually, and model the situation as a beam simply supported at both ends with equivalent point loads (P) acting at equal distances from the ends of the beam.

$m\_bench := m\_tbeam \cdot 15$ $\quad m\_bench = 16.521$ mass of the optical bench

$P := \left(\frac{m\_bench}{4} + \frac{75}{4}\right) \cdot accel$ $\quad P = 224.455$ Total force pulling down on each one of the four vertical support bars (includes mass of the optical elements).

$a := \frac{length}{\cos\left(\frac{37 \cdot 2 \cdot \pi}{360}\right)}$ $\quad a = 0.417$ Distance from the ends that the point loads act on the beam.

$L := \frac{1}{\cos\left(\frac{37 \cdot 2 \cdot \pi}{360}\right)}$ $\quad L = 1.252$ Length of each of the two criss-crossed truss beams.

$width := .025$
$thick := .025$
The criss-crossed truss beams are assumed to have the cross-sectional dimensions 2.5 x 2.5 cm.

$I := \frac{width \cdot thick^3}{12}$ Criss-crossed truss beams' moment of inertia.

$maxdef := \frac{P \cdot a}{24 \cdot E \cdot I} \cdot \left(3 \cdot L^2 - 4 \cdot a^2\right)$ $\quad maxdef = 6.859 \cdot 10^{-3}$ Maximum amount of sag (in meters). This occurs at the center of the beam.

According to this calculation, the bench will hang down almost 7 mm from its initial position. Because there are no specific criteria stated for this topic, we assume this amount of sagging is acceptable. If it's not, the design must be revised, perhaps by increasing the cross-sectional areas of the two criss-crossed truss beams.

Let's now look at #2: Determining how much the four vertical support bars will stretch under the tensile load of the bench (depicted in Figure 4a.):

$a := .025$

$A := a \cdot a$ Cross-sectional area of each of the four vertical support beams (m^2).

$E := 70 \cdot 10^9$

$P = 224.455$ Tensile load (in Newtons) on each of the four vertical support beams.

$L := .47$ Approximate initial length of the vertical support beams (in meters).

$delta\_L := \frac{P \cdot L}{A \cdot E}$ $delta\_L = 2.411 \cdot 10^{-6}$ A little over 2 microns.

This shows that the stretching of the vertical hanging bars is insignificant compared to the deflection of the criss-crossed truss beams above them.

As always, the final step is looking at the total mass of the system.

1) Truss mass

$dens := 2700$ Density of Aluminum (kg/m^3)

$longbars := dens \cdot 1 \cdot .025 \cdot .025$ $shortbars := dens \cdot .75 \cdot .025 \cdot .025$ $crossbars := dens \cdot .025 \cdot .025 \cdot \sqrt{.75^2 + 1^2}$

$endcrossbars := dens \cdot .025 \cdot .025 \cdot \sqrt{.75^2 + .75^2}$ $mass\_truss := longbars \cdot 4 + shortbars \cdot 4 + crossbars \cdot 8 + endcrossbars \cdot 2$

$mass\_truss = 32.267$

2) Optical bench mass

$mass\_bench := m\_tbeam \cdot 15$ $mass\_bench = 16.521$

3) Vertical support bars mass

$mass\_hangbars := dens \cdot .025 \cdot .025 \cdot .47 \cdot 4$ $mass\_hangbars = 3.172$

4) Liquid nitrogen reservoir mass (See "Liquid Nitrogen Reservoir/Optical Bench: Design C" for calculations determining the necessary dimensions for the liquid nitrogen reservoir)

$length := .32$ $height := .2$ $width := .75$ $thickness := .006$

$Mtopbottom := dens \cdot length \cdot width \cdot thickness$ $Mtopbottom = 3.888$

$Msides := dens \cdot height \cdot length \cdot thickness$ $Msides = 1.037$

$Mends := dens \cdot height \cdot width \cdot thickness$ $Mends = 2.43$

$mass\_box := 2 \cdot Mtopbottom + 2 \cdot Msides + 2 \cdot Mends$ $mass\_box = 14.71$

Total mass of Aluminum needed to construct this design:

$total\_mass := mass\_truss + mass\_bench + mass\_hangbars + mass\_box$ $total\_mass = 66.67$ kg

Including the liquid nitrogen itself (40 lbs. worth), the total mass of the system is: $total\_mass + 18.2 = 84.87$ kg

6. Conclusion

This structural design satisfies all the deflection criteria and would require a total mass of aluminum around 67 kg. The primary disadvantage of this design is that it requires three separate structures: the truss, the optical bench, and the liquid nitrogen reservoir. Construction of this system may very well prove to be significantly more difficult than the other designs. There are also a number of other issues that warrant attention. First, the deflections suffered by the truss itself have not been specifically addressed here. Appendix I at the end of this paper provides an example of how to calculate such deflections. However, exactly how truss deformations will effect the optical bench (and consequently optics alignment) is unclear and may be beyond the scope of this investigation. Additionally, we must remember that this instrument may be rotated through any number of degrees and in various directions. Figure 5 illustrates the case where the instrument is "tipped up on end". Although it is again unclear what effect this configuration would have on the optical bench, Figure 5 shows one possibility that would almost certainly disrupt the optics alignment. Further calculations must be undertaken to determine exactly how the bench would react in such a situation.

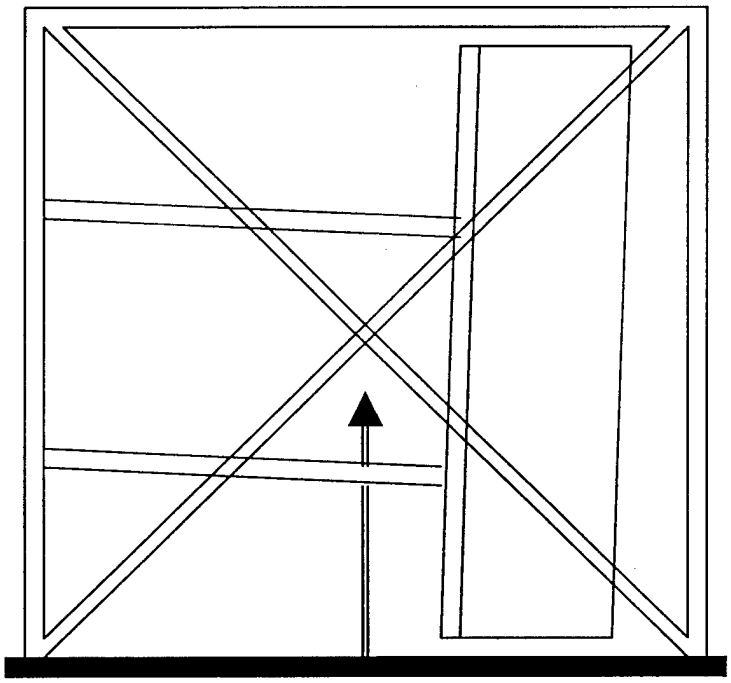

Figure 5. IR instrument rotated 90 degrees.

If this design is ultimately used for the Spartan IR camera, the two other important components that require further investigation are the copper thermal connection bands and the optical element bases. The number, size, and attachment positions of the copper bands must be sufficient to keep the optical bench cool enough to meet the instrument's thermal requirements. Similarly, the size and positioning of the optical element bases must be pursued keeping mass and angular deflection to a minimum. Figures 6, 7 and 8 depict the three separate parts of this system (including all of the important measurements), and together provide a comprehensive illustration of Design B.

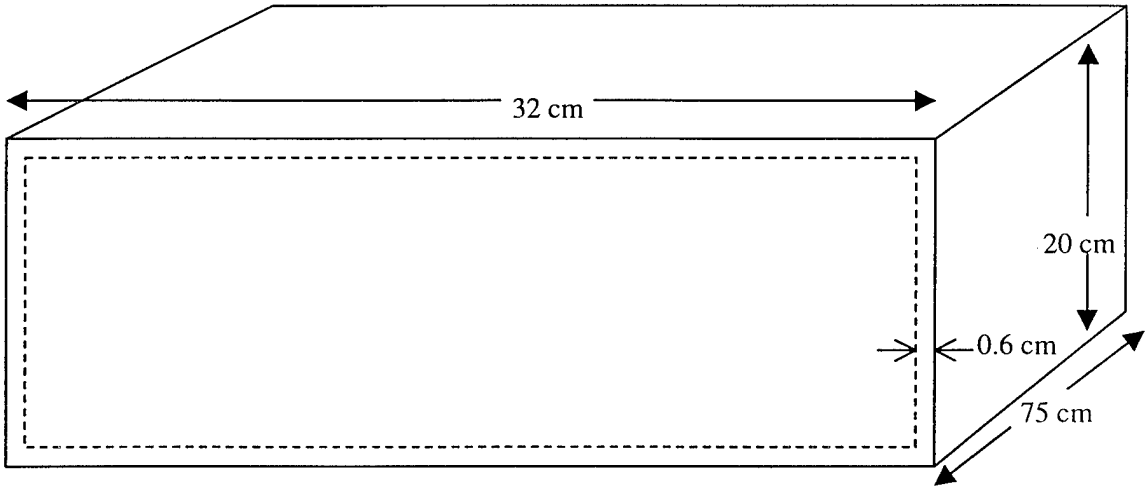

Figure 6. Liquid Nitrogen Reservoir.

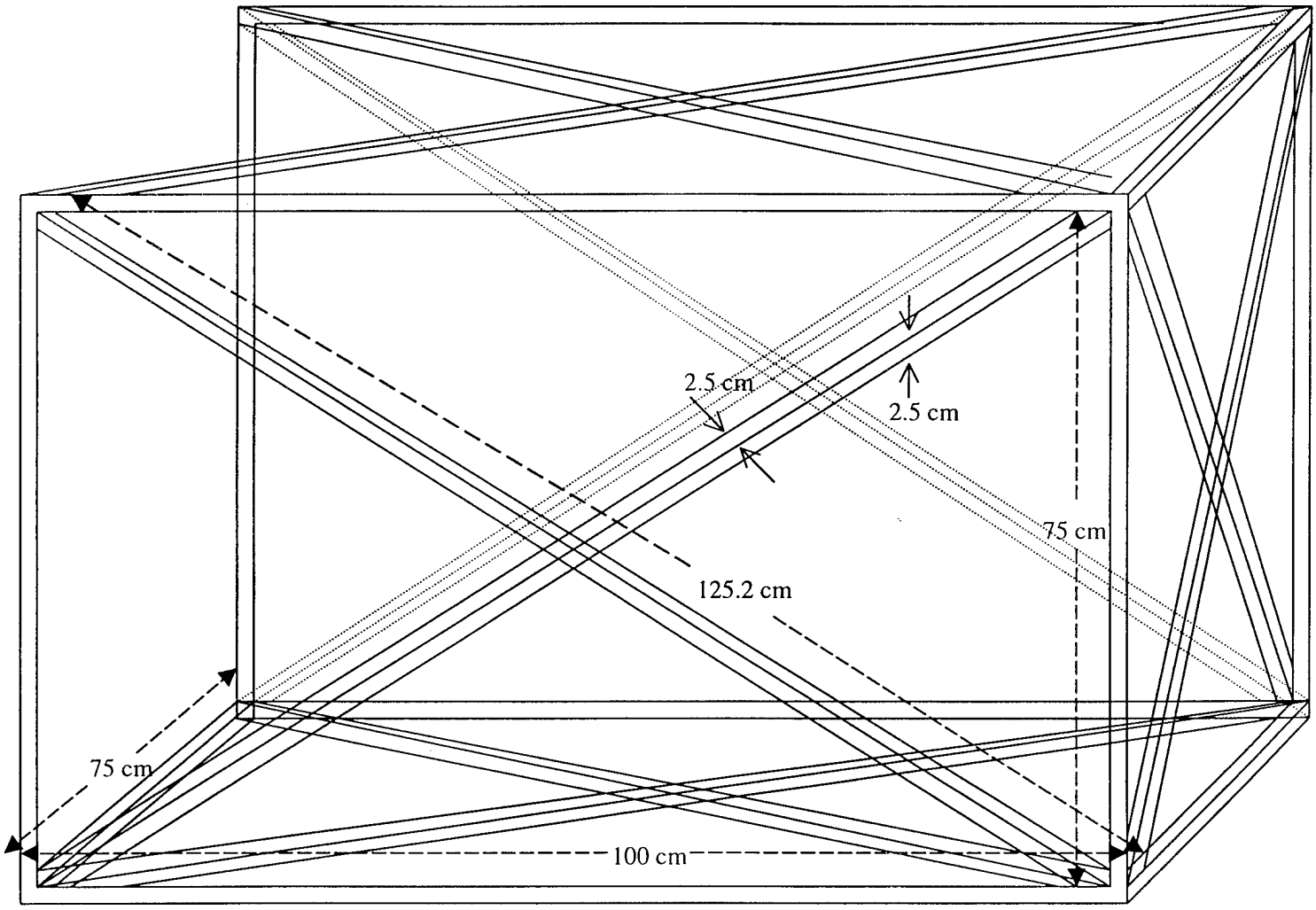

Figure 7. Truss.

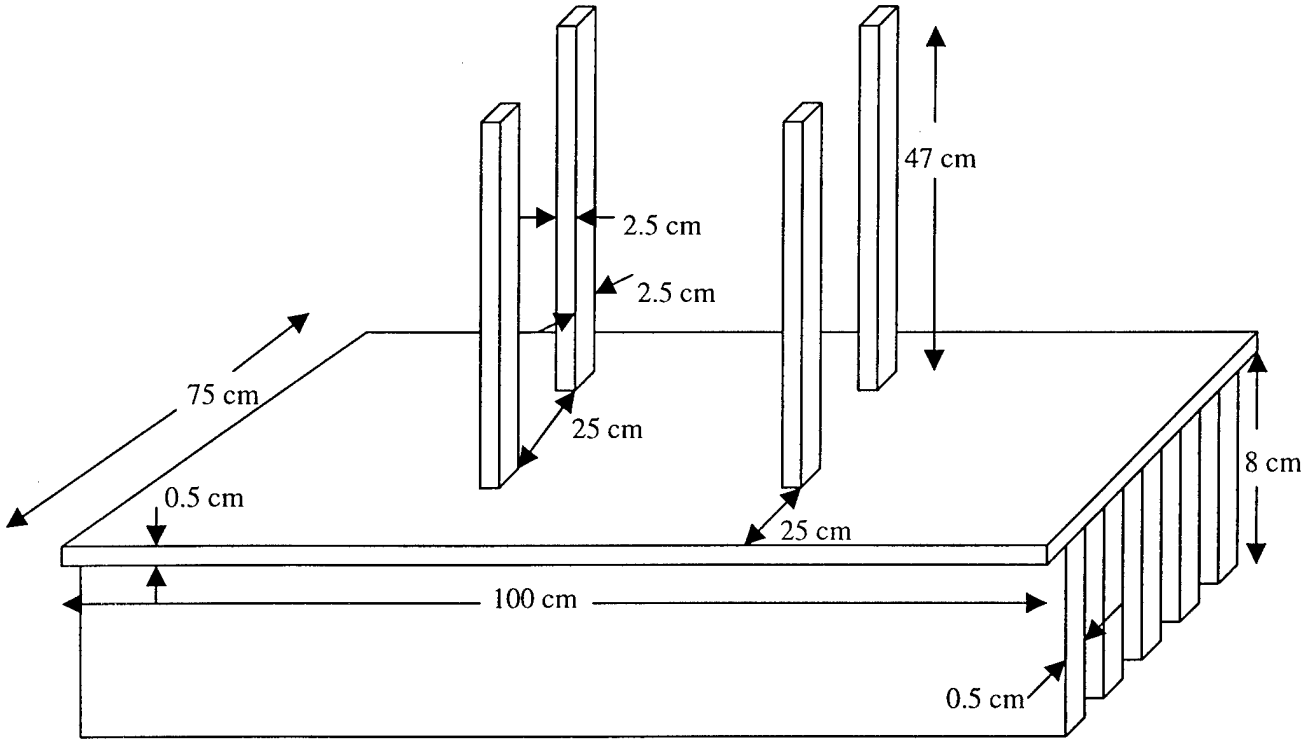

Figure 8. Vertical supports and optical bench.

References

Flugge, V. Handbook of Engineering Mechanics, 1961. (Available at MSU Engineering Library: TA 350 .F58).

Blake, Alexander. Handbook of Mechanics, Materials and Structures, 1985. (MSU Engineering Library: TA 350 .H23).

APPENDIX I

Truss deflection calculations

Quite a few assumptions are employed to make this problem reasonably solvable:

1. The entire load of the system (optical bench + truss itself) is divided up evenly in fourths and applied as point loads at the four far corner joints of the truss. (See Figure A1)

2. The only load bearing members are the diagonal and horizontal beams of the truss's sides. Combining this assumption with the first one, we have simplified the problem from 18 members down to two members. And since each of the four end joints endure the exact same load and have the exact same geometric shape, we really only have to solve one two-member problem and apply the solution four times. (See Figure A2)

3. Only the vertical and horizontal displacements of the four end joints will be determined; the exact deformed shape of each of the truss members will remain unknown. If the deformed shapes must be known, more detailed calculations than what are shown here will have to be done.

4. The problem will be solved using an energy method described in Handbook of Mechanics, Materials and Structures by Alexander Blake, 1985. (MSU Engineering Library: TA 350 .H23)

$P := 52 \cdot 9.81$ $\quad P = 510.12$ Total load (N) (from optical bench mass + truss mass)

$a := .025$ beam cross-sectional dimension (m)

$E := 70 \cdot 10^9$ Young's modulus, aluminum (Pa)

$L1 := 1.252$ Length, diagonal beam (m)

$L2 := 1$ Length, norizontal beam (m)

$k1 := \frac{a \cdot a \cdot E}{L1}$ $\quad k1 = 3.494 \cdot 10^7$ Elastic constant, diagonal beam (N/m)

$k2 := \frac{a \cdot a \cdot E}{L2}$ $\quad k2 = 4.375 \cdot 10^7$ Elastic constant, horizontal beam (N/m)

$U := \frac{(1.662 \cdot P)^2}{2 \cdot k1} + \frac{(1.327 \cdot P)^2}{2 \cdot k2}$ Potential energy stored in horizontal + diagonal beam (via geometry calculations)

Vertical displacement (deflection del_p) of the joint (where the two beams come together) can be found by taking the derivative of U with respect to P (dU/dP).

$del\_p := \frac{2.761 \cdot P}{k1} + \frac{1.761 \cdot P}{k2}$ $\quad del\_p = 6.084 \cdot 10^{-5}$ Vertical displacement of joint (m)

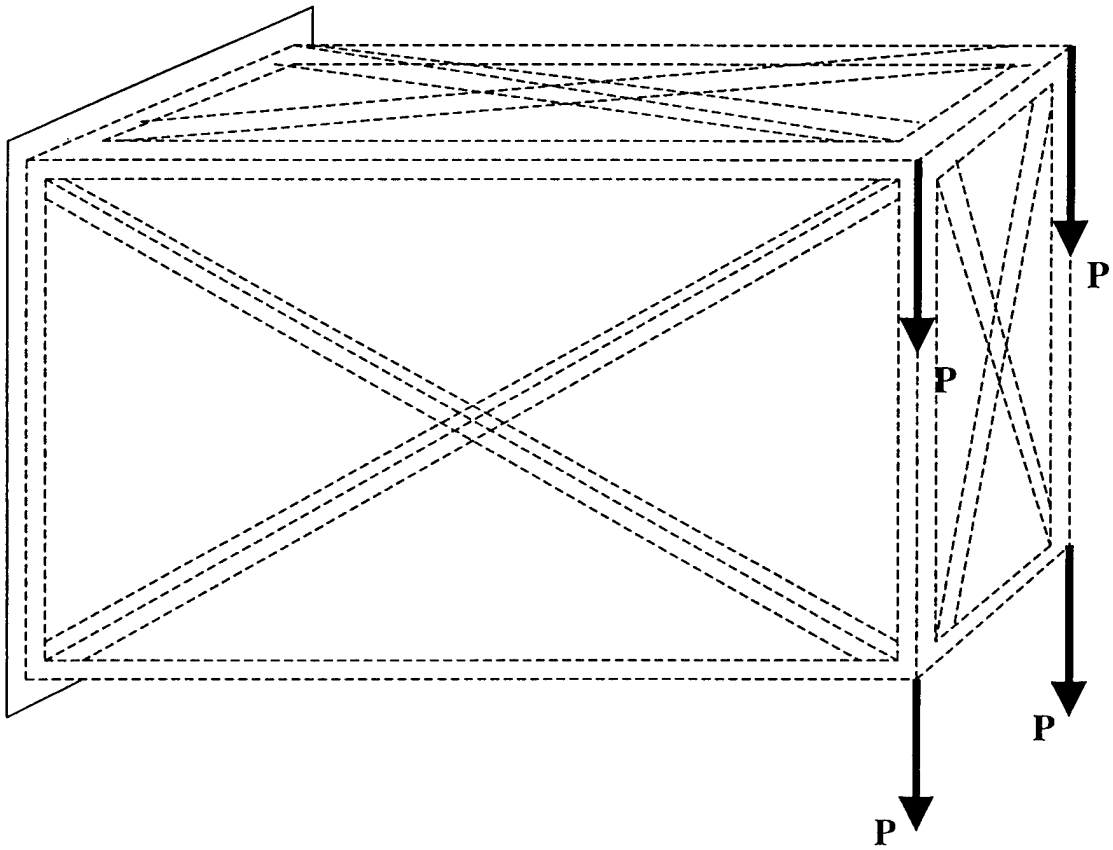

Figure A1. Truss loading conditions.

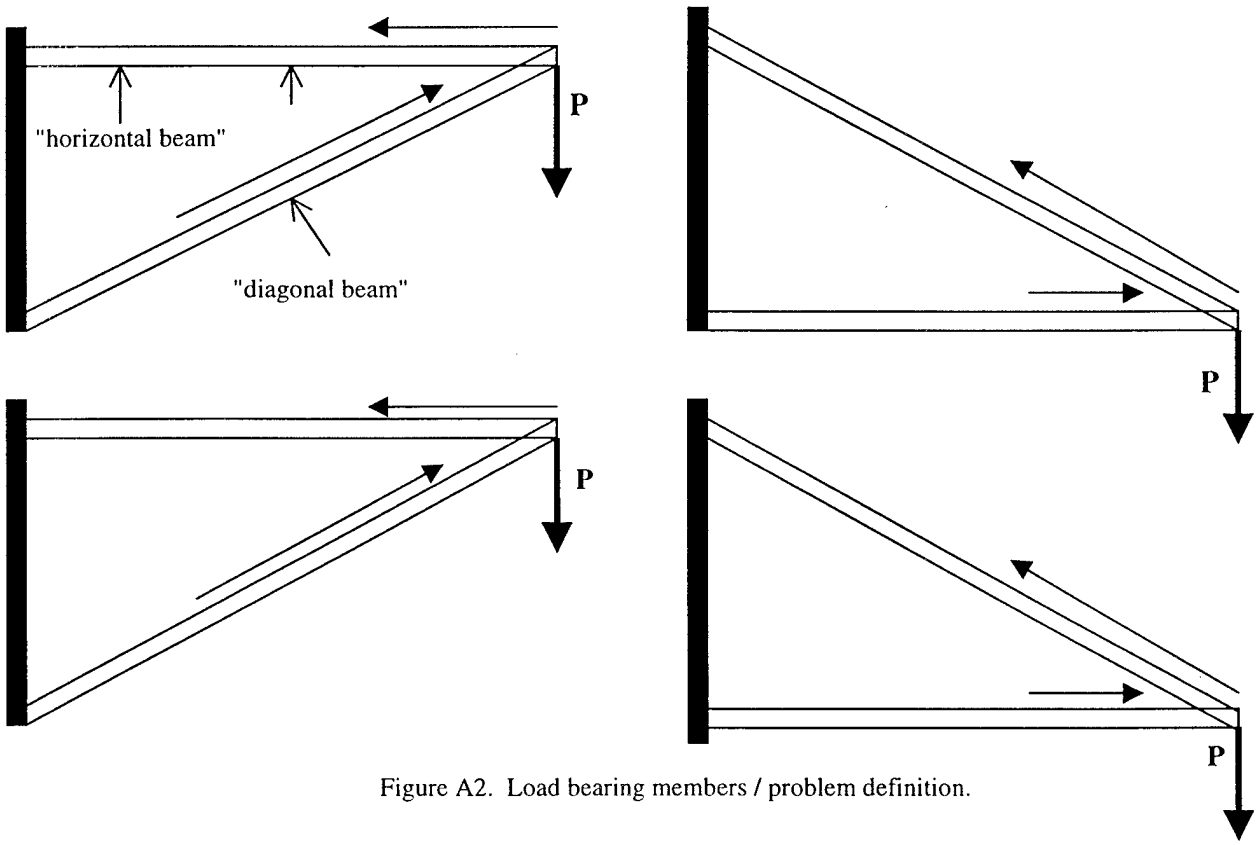

Figure A2. Load bearing members / problem definition.

The horizontal displacement of the joint is found by "applying a fictitious force Q and, after we have determined the horizontal displacement dU/dQ in terms of P and Q, then setting Q=0".

$$U := \frac{2 \cdot P^2}{2 \cdot k1} + \frac{1}{2 \cdot k2} \cdot (P - \blacksquare)^2$$

$$del\_q := \frac{-1.327 \cdot P}{k2} \qquad del\_q = -1.547 \cdot 10^{-5}$$ Horizontal displacement of joint (m)

Since the horizontal displacement of the upper joint is in the opposite direction from the horizontal displacement of the lower joint, the end vertical beams will be tilted at some angle in their deformed condition. The angle which the end beam makes with respect to the perfectly vertical may be important for optical alignment purposes:

$$-2 \cdot del\_q = 3.095 \cdot 10^{-5}$$

$$def\_rad := atan\left(\frac{3.095 \cdot 10^{-5}}{.75}\right) \qquad def\_rad = 4.127 \cdot 10^{-5}$$ radians

$$def\_deg := def\_rad \cdot \frac{360}{2 \cdot \pi} \qquad def\_deg = 2.364 \cdot 10^{-3}$$ degrees

$$def\_arc := def\_deg \cdot 60 \cdot 60 \qquad def\_arc = 8.512$$ Angular deflection of end beam (arcseconds)

See Figure A3 for a pictoral representation of the truss in its deformed condition.

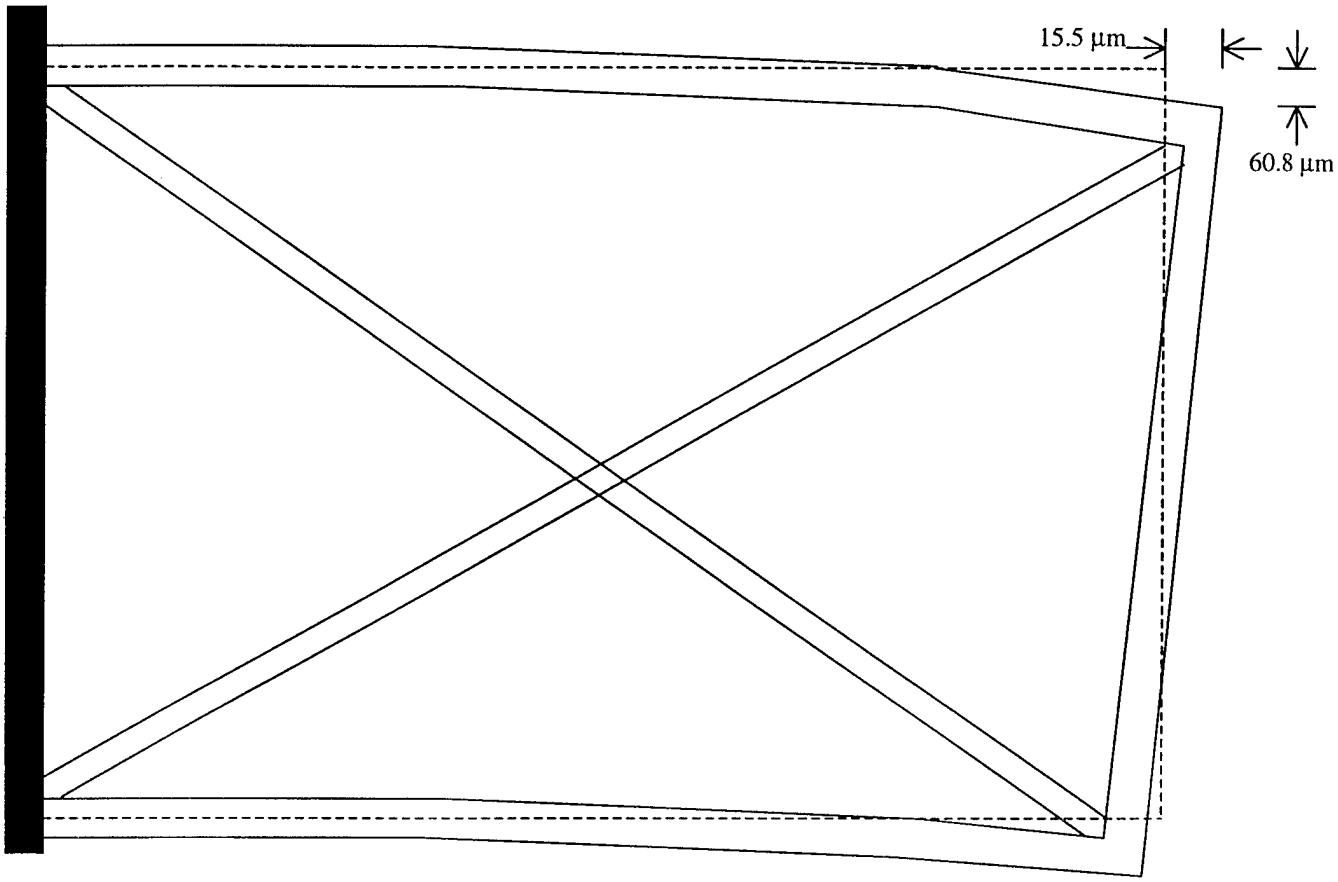

Figure A3. Side view of truss in its (exaggerated and not to scale) deformed condition.

SPARTAN IR CAMERA FOR THE SOAR TELESCOPE

Liquid Nitrogen Reservoir/Optical Bench: Design C

Edwin D. Loh
Daniel E. Polsgrove

Department of Physics & Astronomy
Michigan State University, East Lansing, MI 48824

Loh@pa.msu.edu 517 353–4869

16 Aug 1999

1. Problem Definition

The space available on the SOAR telescope for the Spartan IR camera instrumentation is an area 1 x .75 x .75 meters.

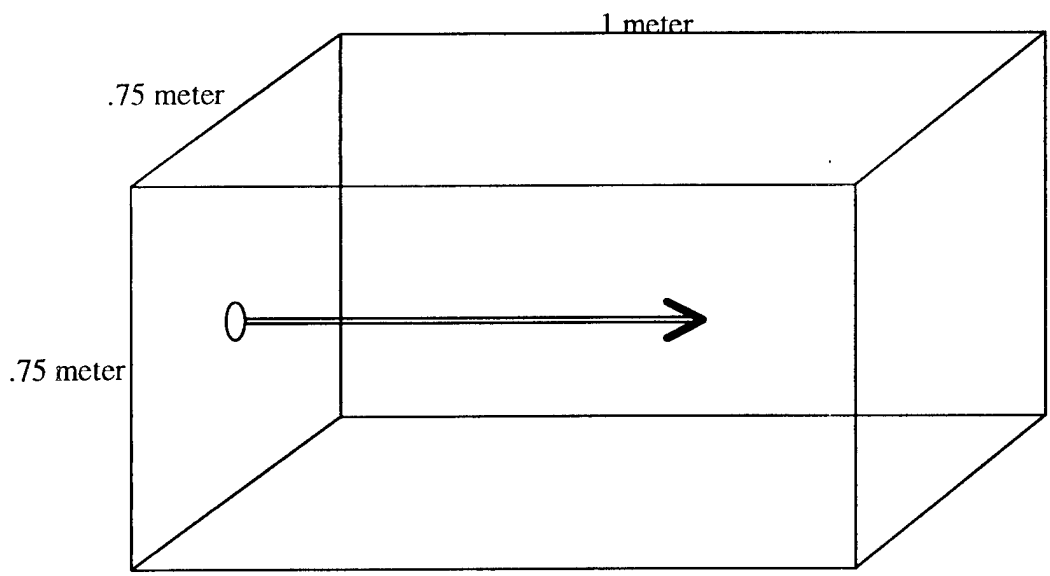

Figure 1. Spartan IR camera: space available.

Light from the telescope enters along the long axis of the 3-D rectangular area. The light must pass through the center of eleven individual optical elements (mirrors, lenses, etc.), so they must be aligned in the light's plane. Additionally, these optical elements must be kept cool by way of contact with a certain volume of liquid nitrogen (temperature = 77 K). This volume of liquid nitrogen must also be contained within the boundaries of the space pictured in Figure 1. Furthermore, the optical elements must not change from their original position by more than a certain fraction of the wavelength being observed at. Anything more than a slight misalignment will significantly affect the data collecting capabilities of the instrument.

2. Assumptions and criteria

2.1. The structures used to contain the liquid nitrogen and support the optical elements (a.k.a. the optical bench) will be made of aluminum.

2.2. The total mass of the structure must not exceed 120 kg; and as always, the lighter the better.
2.3. The optical bench surface must remain almost perfectly flat; under it's own weight and the weight of optical elements on top. Any angular deflection greater than 5 arcseconds is unacceptable.
2.4. The entire space shown in Figure 1 will be under vacuum conditions when the instrument is being used.
2.5. The liquid nitrogen (LN2) container must be able to hold 30 lbs (18.2 kg) of LN2 and also have a vent leading *outside* the vacuum region.

3. Background

The initial design called for making a single box that would contain the liquid nitrogen inside while allowing for optical elements to be mounted on its top. This was the preferred design because of its simplicity. However, with this design, the inside of the box would be subjected to atmospheric pressure (15 psi) because of the necessary vent leading from the LN2 storage area to the outside. Since the inside of this box would be at 15 psi while the outside would remain at 0 psi in vacuum, the top of the box (optical bench) would bow out significantly due to the pressure difference. Calculations showed that the angular deflection caused by this "bowing out" would be over 100 arcseconds.

This deviation from flatness is unacceptable. To remedy this problem, the basic idea is to separate the optical bench from the LN2 box. This way, we can pursue structures that keep the optical bench flat without having to deal with the annoyance of a 15 psi pressure gradient. The structural design described in the remainder of this paper is one of several designs developed for meeting the criteria stated in Section 2. The other designs are presented in separate papers similar to this one. Here, the optical bench is essentially a succession of T-beams stuck side by side and supported on both ends by two tall rectangular beams. The LN2 box is located below and independent from the optical bench. Illustrations of the design are provided first, followed by calculations to show its compliance with the criteria stated in Section 2.

4. Design Illustrations

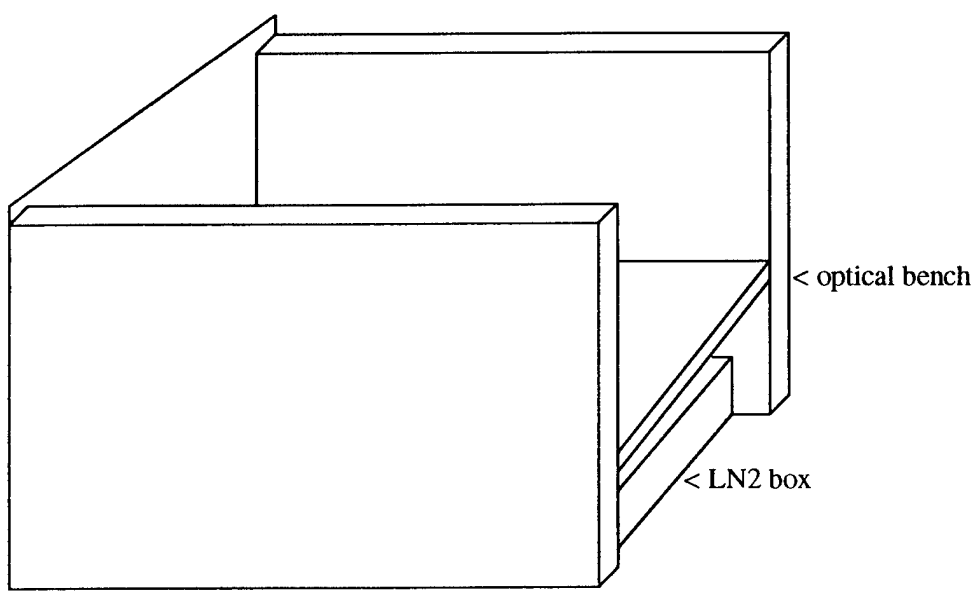

Figure 2a. 3-D view.

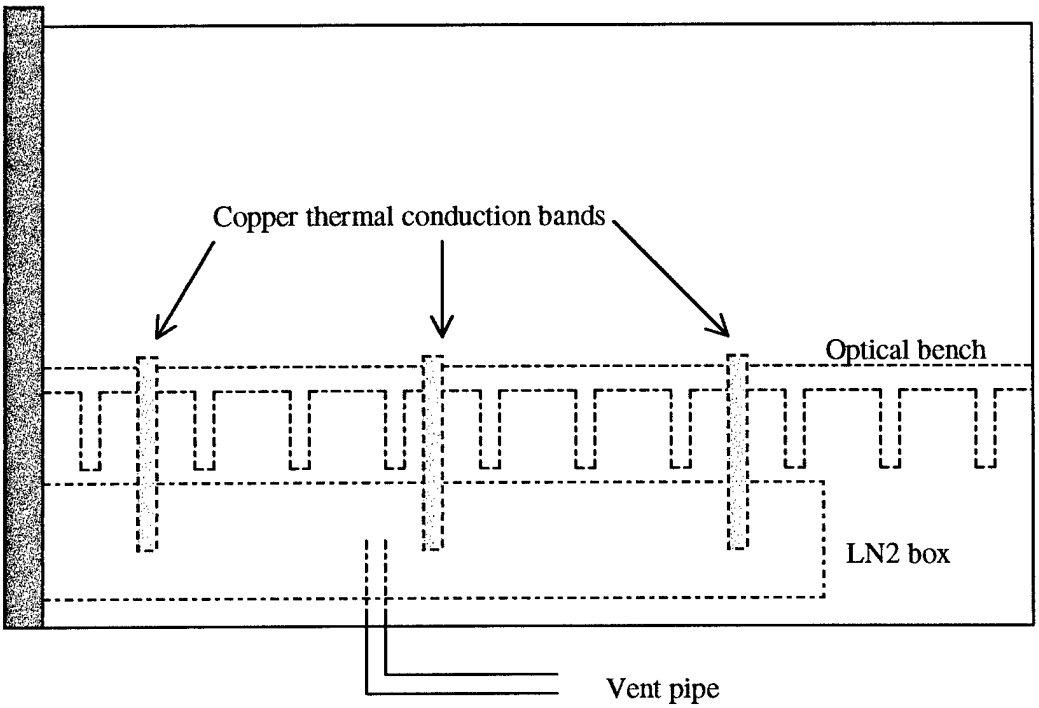

Figure 2b. Side view.

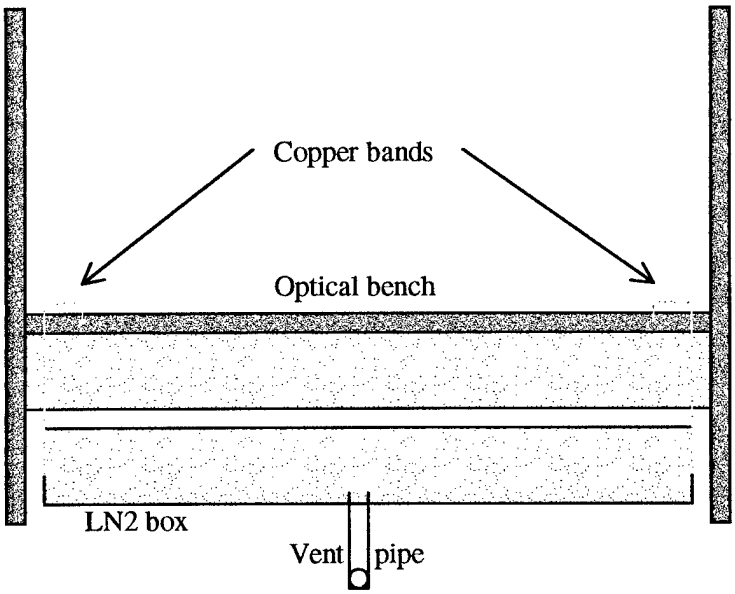

Figure 2c. End view.

5. Calculations (Shown here on MathCad worksheet)

First, we need to determine what size to make the two side supporting rectangular beams. The size we will use depends solely on how great a deflection we want to allow. Since the total deflection must be less than 5 arcseconds, we'll make these two side beams thick enough and wide enough to allow only up to 1 arcsecond deviation from perfect rigidity. This will leave up to 4 arcseconds deflection leeway for the optical bench part of the design.

$thick := .67$ Beam height (m)

$length := 1$ Beam length (m)

$wid := .01$ Beam width (m)

$E := 70 \cdot 10^{9}$ Young's Modulus for Aluminum (Pa or N/m^2)

$v := .34$ Poisson's ratio fro Aluminum (unitless)

$I := \frac{wid \cdot thick^{3}}{12}$ $I = 2.506 \cdot 10^{-4}$ Beam moment of inertia (m^4)

$dens := 2700$ Mass density of Aluminum (kg/m^3)

$accel := 9.8$ Gravitational acceleration (m/s^2)

$massside := dens \cdot thick \cdot wid \cdot length$ $massside = 18.09$ Mass of the beam (kg)

$benchmass := 24$ (from future calculations)

$opticsmass := 75$ (from SOAR documentation)

$mass := \frac{benchmass + opticsmass}{2} + massside$ $mass = 67.59$ Total mass supported by one of the side beams

$F := mass \cdot accel$ $F = 662.382$ Force on the beam due to weight it must support (modeled as uniform pressure pushing down on top surface of the beam and includes its own weight plus the anticipated weight of HALF the [optical bench + optical elements ON the bench])

$p := \frac{F}{length}$ $p = 662.382$ Pressure placed on the beam [Force/length] (comes out the same value as Force because the length of the beam is 1 meter)

$maxdef := \frac{p \cdot length^{4}}{8 \cdot E \cdot I}$ $maxdef = 4.719 \cdot 10^{-6}$ Maximum deflection (in meters)

$defang\_rad := atan\left(\frac{maxdef}{length}\right)$ $defang\_rad = 4.719 \cdot 10^{-6}$ Maximum angular deflection (in radians)

$defang\_deg := defang\_rad \cdot \frac{360}{2 \cdot \pi}$ $defang\_deg = 2.704 \cdot 10^{-4}$ Maximum angular deflection (in degrees)

$defang\_arcsec := defang\_deg \cdot 60 \cdot 60$ $defang\_arcsec = 0.973$ Maximum angular deflection (in arcseconds)

Now we model the optical bench as a system of 10 T-shaped beams joined side by side and find their dimensions such that angular deflection is limited to less than 4 arcseconds. We will first assume that all of the optical elements mounted on top of the bench will have bases that span at least one if not two of the vertical support ribs underneath the bench. After that, we will look at the possibility of deflection inbetween the underlying support ribs due to optical elements being mounted in these areas WITHOUT their bases spanning any ribs beneath. These two situations are illustrated on the previous page in the order presented in this paragraph.

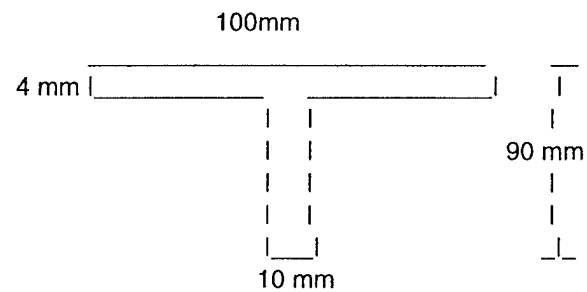

$length := .75$

$B := .1$

$b := .09$

$d := .004$

$H := .09$

$a := B - b \qquad a = 0.01$

$c1 := \frac{1}{2}\cdot\left(\frac{a\cdot H^2 + b\cdot d^2}{a\cdot H + b\cdot d}\right) \qquad c1 = 0.033 \qquad c2 := H - c1 \qquad c2 = 0.057$

$h := H - d - c2 \qquad h = 0.029$

This moment of inertia equation comes from Handbook of Mechanics, Materials & Structures by Alexander Blake, 1985)

$I\_t := \frac{1}{3}\cdot\left(B\cdot c1^3 - b\cdot h^3 + a\cdot c2^3\right) \qquad I\_t = 1.083\cdot 10^{-6}$

$m\_tbeam := B\cdot H\cdot length\cdot dens - \left[\frac{b}{2}\cdot(c2 + h)\cdot length\cdot dens\right] - \left[\frac{b}{2}\cdot(c2 + h)\cdot length\cdot dens\right] \qquad m\_tbeam = 2.551$

Mass of individual T-beam

$m\_optics := \frac{75}{10} \qquad m\_optics = 7.5$ Assuming optical elements are uniformly distributed over entire bench

$F := (m\_tbeam + m\_optics)\cdot accel \qquad F = 98.505$ Force pushing down on individual T-beam

$q := \frac{F}{length}$ Pressure pushing down on individual T-beam [Force/length]

$max\_def := \frac{5\cdot q\cdot length^4}{384\cdot E\cdot I\_t} \qquad max\_def = 7.135\cdot 10^{-6}$ Maximum deflection (in meters)

Since the situation we're modeling here is a beam clamped at both ends, the maximum deflection must occur at the center of the beam. Therefore, the maximum deflection angle must be found by taking the arctangent of the max deflection divided by half the length of the beam (75cm/2 in this case).

$$maxangle\_rad := atan\left[\frac{max\_def}{\left(\frac{.75}{2}\right)}\right]$$ $maxangle\_rad = 1.903 \cdot 10^{-5}$ Maximum deflection (in radians)

$$maxangle\_deg := maxangle\_rad \cdot \frac{360}{2 \cdot \pi}$$ $maxangle\_deg = 1.09 \cdot 10^{-3}$ Maximum deflection (in degrees)

$maxangle\_arcsec := maxangle\_deg \cdot 60 \cdot 60$ $maxangle\_arcsec = 3.924$ Maximum deflection (in arcseconds)

Maximum deflection is under 5 arcseconds, even when adding in the deflection contribution from the side support beams.

Summing up the masses of all the T-beams plus the two side support beams gives us the total mass of the optical bench system:

$total\_mass := m\_tbeam \cdot 10 + 2 \cdot massside$ $total\_mass = 61.695$

Now we'll look at the top surface of the bench in the sections inbetween each of the vertical support beams underneath. We attack the calculation of deflection in these regions by modeling them as rectangular plates with simply supported boundary conditions on each edge. Each of these sections is .1 m wide and .75 m long. We'll determine the thickness necessary to prevent any angular deflection greater than 5 arcseconds assuming a worst case scenario with respect to loading.

$v := .34$ $E := 70 \cdot 10^9$

Optical element assumptions: 1. Element is attached to the box top (i.e. the optical bench) by rectangular base clamps which produce a uniform load over the entire t-beam section being looking at.
2. Assume a worst-case scenario where there are **two** optical elements attached atop of one individual inbetween t-beam element.

$dens\_glass := 2200$ $dens\_clamp := 2700$ assume clamp is made of aluminum

$mass\_glass := dens\_glass \cdot .2 \cdot .02 \cdot .2$ $mass\_glass = 1.76$ Mass of the glass/silica portion of the optical element

$mass\_clamp := dens\_clamp \cdot .2 \cdot .03 \cdot .05$ $mass\_clamp = 0.81$ Mass of the aluminum base portion

$mass\_plate := dens\_clamp \cdot .1 \cdot .0156 \cdot .75$ $mass\_plate = 3.159$ Mass of the aluminum optical bench section

$tot\_mass := (mass\_clamp + mass\_glass) \cdot 2 + mass\_plate$ $tot\_mass = 8.299$

$F := tot\_mass \cdot accel$ $F = 81.33$

$$q := \frac{F}{.25 \cdot .05}$$ $q = 6.506 \cdot 10^3$ Total pressure pushing down on inbetween t-beam section (the plate) [N/m^2]

$m := 1, 3 .. 11$ $\quad n := 1, 3 .. 11$ 6 terms in the expansion should be plenty

Plate deflection equations used below are from Handbook of Engineering Mechanics by Flugge, 1961.

$t := .013 \quad A := .1 \quad B := .75$
plate dimensions (meters)

$$K := \frac{E \cdot t^3}{12 \cdot \left(1 - v^2\right)}$$ Flexural rigidity or bending stiffness (meters^3)

$$maxdef := \frac{16 \cdot q \cdot A^4}{\pi^6 \cdot K} \cdot \sum_n \sum_m \frac{1}{m \cdot n \cdot \left[m^2 + n^2 \cdot \left(\frac{A^2}{B^2}\right)\right]^2}$$

$maxdef = 1.035 \cdot 10^{-6}$ Maximum deflection (in meters)

Under the given boundary conditions, we know the maximum deflection occurs at the center of the plate (aka bench subsection). Therefore, the maximum angular deflection can be calculated by finding the arctangent of the maximum deflection divided by the distance to the nearest edge (which here is 5 cm away).

$$theta\_rad := atan\left[\frac{maxdef}{\left(\frac{.1}{2}\right)}\right]$$

$theta\_rad = 2.071 \cdot 10^{-5}$ Maximum angular deflection (in radians)

$$theta\_deg := \frac{theta\_rad \cdot 360}{2 \cdot \pi}$$

$theta\_deg = 1.186 \cdot 10^{-3}$ Maximum angular deflection (in degrees)

$theta\_deg \cdot 60 \cdot 60 = 4.271$ Maximum angular deflection (in arcseconds)

We've shown here that the top surface of the bench must be at least 13 cm thick to avoid unacceptable angular deflections in a worst case loading situation. We can now re-calculate the mass of the system when the top surface of all the t-beams is 13 cm thick:

$length := .75$

$B := .1$

$b := .09$

$d := .013$

$H := .09$

$a := B - b \qquad a = 0.01$

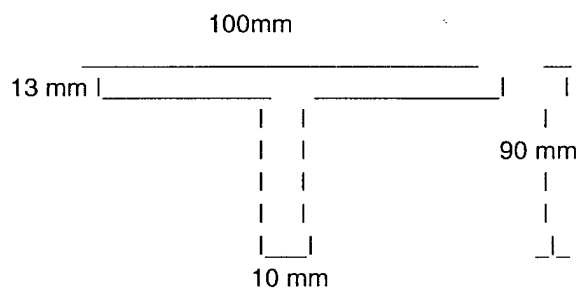

$$c1 := \frac{1}{2} \cdot \left(\frac{a \cdot H^2 + b \cdot d^2}{a \cdot H + b \cdot d}\right) \qquad c1 = 0.023$$

$c2 := H - c1 \qquad c2 = 0.067 \qquad h := H - d - c2 \qquad h = 0.01$

$$I\_t := \frac{1}{3} \cdot \left(B \cdot c1^3 - b \cdot h^3 + a \cdot c2^3\right) \qquad I\_t = 1.378 \cdot 10^{-6}$$

$$m\_tbeam := B \cdot H \cdot length \cdot dens - \left[\frac{b}{2} \cdot (c2 + h) \cdot length \cdot dens\right] - \left[\frac{b}{2} \cdot (c2 + h) \cdot length \cdot dens\right]$$

$m\_tbeam = 4.192$

Mass of individual T-beam

Summing up the masses of all the T-beams plus the two side support beams gives us the total mass of the optical bench system:

$total\_mass := m\_tbeam \cdot 10 + 2 \cdot massside$ $\quad total\_mass = 78.097$

Now onto the LN2 reservoir box portion of the design...

Depth available underneath the T-beam optical bench is at least 17 cm.
First, figure out how much volume the 40 pounds (18.2 kg) of LN2 will occupy:

$densLN2 := .8$ density in g/liter or g/cm^3 $\quad .8 \cdot \frac{1}{1000} \cdot 100^3 = 800$ density in kg/m^3

$18.2 \cdot \frac{1}{800} = 0.023$ volume of LN2 in m^3

If the LN2 box spans entire area underneath the bench (1 x .75 m surface area), depth of the box needs to be just over twice the depth of the LN2 itself (in order to accomodate for the vent pipe):

depth of LN2: $\frac{.023}{1 \cdot .75} = 0.031$ $\quad 2 \cdot .031 = 0.062$ Therefore, box depth must be > 6.2 cm

combined with top and bottom pieces of box at thickness = .8 cm, total height space needed = 7.8 cm. This is much less than the 17 cm available.

So, how about using some of this available depth space and shortening the length of the LN2 box? (i.e., making the box 15 cm deep x 75 cm wide, how long does it need to be...).
Remember, total volume of the box must be greater than .046 m^3:

$boxlength := \frac{.046}{.15 \cdot .75}$ $\quad boxlength = 0.409$

The box only needs to be a little over 40 cm long. We'll make it 42 cm for the remainder of the calculations, just to be safe.

How much will this box deflect down at the end if only attached by clamped edge boundary condition to the telescope's mounting surface? Only a deflection of greater than about 2 cm will be unacceptable - if this happens, part of the box will reside outside the designated space available and may cause problems.

Calculating deflection looking at side plate as a beam with its own weight plus the LN2 weight, modeled as a uniform pressure pushing down on top of the beam...

Aluminum box dimensions (meters): $b := .42$ length $t := .15$ thickness $a := .008$ width

(all sheets of aluminum used to make the box must be 8 mm thick)

Assume the pressure pulling down on the box will be due to 1/2 the weight of the entire box, uniformly distributed over the top surface of the side beam.

ONE CLAMPED END - CANTILEVER BEAM B.C.s

$boxwidth := .75$

$I := \frac{a \cdot t^3}{12}$ Beam moment of inertia

$dens := 2700$ mass density of aluminum (kg/m^3)

$accel := 9.8$ gravitational acceleration (m/s^2)

total mass of the box + LN2

$mtopbottom := dens \cdot b \cdot boxwidth \cdot a$ $mtopbottom = 6.804$

$msides := dens \cdot t \cdot b \cdot a$ $msides = 1.361$

$mends := dens \cdot t \cdot boxwidth \cdot a$ $mends = 2.43$

$mass\_box := 2 \cdot mtopbottom + 2 \cdot msides + 2 \cdot mends$ $mass\_box = 21.19$

$total\_mass := 2 \cdot mtopbottom + 2 \cdot msides + 2 \cdot mends + 18.2$ $total\_mass = 39.39$

Each side beam must support half this weight: $half\_mass := \frac{total\_mass}{2}$ $half\_mass = 19.695$

Force on this mass: $F := half\_mass \cdot accel$ $F = 193.009$

Corresponding pressure on top of side beam: $q := \frac{F}{b}$ $q = 459.545$

$maxdef := \frac{q \cdot b^4}{8 \cdot E \cdot I}$ $maxdef = 1.135 \cdot 10^{-5}$ End deflection is way less than 1 cm

Now determine the bowing out deflection due to pressure inside the LN2 reservoir box (atmospheric pressure; 101.3 x 10^3 Pa) and whether or not this will cause problems.

$p := 101.3 \cdot 10^3$ atmospheric pressure (Pa)

$E := 70 \cdot 10^9$

$L := .42$ Width of the LN2 box (m)

$K7 := .115$ Constant given by Blake for our given top/bottom surface of the box and boundary condition: all 4 edges simply supported.

$h := .008$ Plate thickness of top/bottom surfaces of the box (m)

$$maxdef := \frac{K7 \cdot p \cdot L^4}{E \cdot h^3}$$ $maxdef = 0.01$ 1cm deflection, no problems.

Total mass of aluminum needed to make this whole system, assuming best case where all optical elements have bases that span underlying ribs so inbetween plate deflections can be ignored:

$Tmass := 2 \cdot massside + 2.551 \cdot 10 + mass\_box$ $Tmass = 82.88$ kg

Total mass of the system INCLUDING the liquid nitrogen:

$Tmass := 2 \cdot massside + 2.551 \cdot 10 + mass\_box + 18.2$ $Tmass = 101.08$ kg

---

Total mass of aluminum needed to make this whole system, assuming the worst case scenario loading condition:

$Tmass := 2 \cdot massside + 4.192 \cdot 10 + mass\_box$ $Tmass = 99.29$ kg

Total mass of the system INCLUDING the liquid nitrogen:

$Tmass := 2 \cdot massside + 4.192 \cdot 10 + mass\_box + 18.2$ $Tmass = 117.49$ Still under the absolute max mass of 120 kg.

6. Conclusion

The structural design described here meets all the performance criteria. Its primary advantage is manufacturing simplicity, but its leading disadvantage is how close it comes to the maximum mass limit (both assumption conditions give 100 kg < total mass < 120 kg). If this design is ultimately used for the Spartan IR camera, two of the more important components that require further investigation are the copper thermal connection bands and the optical element bases. The number, size, and attachment positions of the copper bands must be sufficient to keep the optical bench cool enough to meet the instrument's thermal requirements. Similarly, the size and positioning of the optical element bases must be determined keeping mass and angular deflection to a minimum. Figure 3 below provides a comprehensive illustration of the system including all important measurements (for the case where any deflections occurring inbetween underlying ribs are ignored).

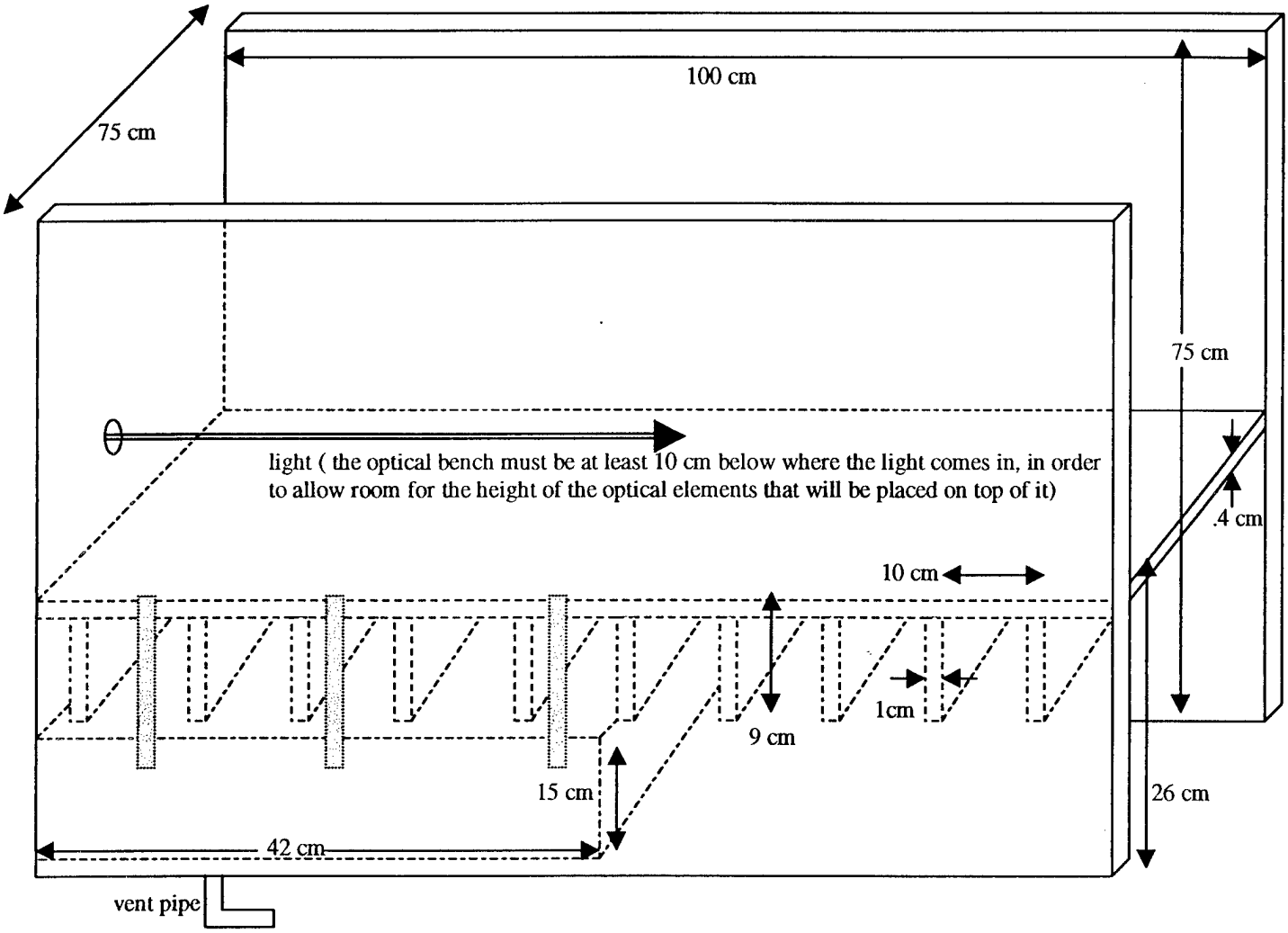

Figure 3. Comprehensive design illustration.

References

Flugge, V. Handbook of Engineering Mechanics, 1961. (Available at MSU Engineering Library: TA 350.F58).

Blake, Alexander. Handbook of Mechanics, Materials and Structures, 1985. (MSU Engineering Library: TA 350 .H23).