JPRS 70432

6 January 1978

WORLD

WIDE

TRANSLATIONS ON TELECOMMUNICATIONS POLICY, RESEARCH AND DEVELOPMENT

No. 26

Reproduced From
Best Available Copy

DISTRIBUTION STATEMENT A
Approved for Public Release
Distribution Unlimited

U. S. JOINT PUBLICATIONS RESEARCH SERVICE

20000202 118

NOTE

JPRS publications contain information primarily from foreign newspapers, periodicals and books, but also from news agency transmissions and broadcasts. Materials from foreign-language sources are translated; those from English-language sources are transcribed or reprinted, with the original phrasing and other characteristics retained.

Headlines, editorial reports, and material enclosed in brackets [] are supplied by JPRS. Processing indicators such as [Text] or [Excerpt] in the first line of each item, or following the last line of a brief, indicate how the original information was processed. Where no processing indicator is given, the information was summarized or extracted.

Unfamiliar names rendered phonetically or transliterated are enclosed in parentheses. Words or names preceded by a question mark and enclosed in parentheses were not clear in the original but have been supplied as appropriate in context. Other unattributed parenthetical notes within the body of an item originate with the source. Times within items are as given by source.

The contents of this publication in no way represent the policies, views or attitudes of the U.S. Government.

PROCUREMENT OF PUBLICATIONS

JPRS publications may be ordered from the National Technical Information Service, Springfield, Virginia 22151. In ordering, it is recommended that the JPRS number, title, date and author, if applicable, of publication be cited.

Current JPRS publications are announced in Government Reports Announcements issued semi-monthly by the National Technical Information Service, and are listed in the Monthly Catalog of U.S. Government Publications issued by the Superintendent of Documents, U.S. Government Printing Office, Washington, D.C. 20402.

Indexes to this report (by keyword, author, personal names, title and series) are available through Bell & Howell, Old Mansfield Road, Wooster, Ohio, 44691.

Correspondence pertaining to matters other than procurement may be addressed to Joint Publications Research Service, 1000 North Glebe Road, Arlington, Virginia 22201.

BIBLIOGRAPHIC DATA SHEET	1. Report No. JPRS 70432	2.	3. Recipient's Accession No.
4. Title and Subtitle TRANSLATIONS ON TELECOMMUNICATIONS POLICY, RESEARCH AND DEVELOPMENT, No. 26			5. Report Date 6 January 1978 6.
7. Author(s)			8. Performing Organization Rept. No.
9. Performing Organization Name and Address Joint Publications Research Service 1000 North Glebe Road Arlington, Virginia 22201			10. Project/Task/Work Unit No. 11. Contract/Grant No.
12. Sponsoring Organization Name and Address As above			13. Type of Report & Period Covered 14.
15. Supplementary Notes			

16. Abstracts

This serial report contains translations from the world press and radio relating to worldwide political, economic and technical developments in telecommunications, computers, and satellite communications. Coverage will be worldwide with focus on France, Federal Republic of Germany, United Kingdom, Italy, Japan, the USSR, People's Republic of China, Sweden, and the Netherlands.

17. Key Words and Document Analysis. 17a. Descriptors

Worldwide
Computers
Satellite Communications
Electronics and Electrical Engineering
Telecommunications
Telemetry

17b. Identifiers/Open-Ended Terms

17c. COSATI Field/Group 09B, C, F, 17B, 22B

18. Availability Statement	19. Security Class (This Report)	21. No. of Pages
Unlimited Availability Sold by NTIS Springfield, Virginia 22151	UNCLASSIFIED	69
	20. Security Class (This Page) UNCLASSIFIED	22. Price

FORM NTIS-35 (REV. 3-72) THIS FORM MAY BE REPRODUCED USCOMM-DC 14952-P72

JPRS 70432

6 January 1978

TRANSLATIONS ON TELECOMMUNICATIONS POLICY, RESEARCH AND DEVELOPMENT

No. 26

CONTENTS PAGE

WORLDWIDE AFFAIRS

Briefs
UN Broadcasts to SA 1
Earth Satellite Communications Project 1
Soviet-Burundian Agreement 2

ASIA

INTER-ASIAN AFFAIRS

Conference Agrees To Set Up Asian News System
(WEEKEND, 11 Dec 77)..... 3

INDONESIA

Address to Nongovernment Broadcasters Meeting
(Jakarta Domestic Service, 15 Dec 77)..... 5

SRI LANKA

Country To Join Undersea Communications System
(Patrick Cruez; CEYLON DAILY NEWS, 12 Dec 77)..... 7

EASTERN EUROPE

INTERNATIONAL AFFAIRS

Briefs
GDR-CSSR Radio Accord 9

CONTENTS (Continued) Page

NEAR EAST AND NORTH AFRICA

LEBANON

Progress in Restoring Communications Reported
(L'ORIENT-LE JOUR, 4 Nov 77)..... 10

USSR

Moscow - Yerevan Satellite Communications Link Established
(Yu. Kozlov; KOMMUNIST, 5 Nov 77)..... 14

Briefs
Chief of Orbita-2 Station Comments 17
Assembly Brigade Foreman Comments 17

WESTERN EUROPE

INTERNATIONAL AFFAIRS

New Denmark-Norway Telecommunications Cable Begins Service
(AFTENPOSTEN, 2 Nov 77)..... 18

ITALY

Techniques Used in Introducing Time-Division Switching Systems
(Paolo de Ferra, Admeto De Giovanni; TELE-COMUNICAZIONI, Sep-Dec 76)..... 20

Development of the Peripheral Exchange in the PROTEO System
(Guido Arrigoni, et al.; TELECOMUNICAZIONI, Sep-Dec 76)..... 38

NORWAY

Nordsat Advantages Explained
(Carsten Middelthon; ARBEIDERBLADET, 2 Nov 77)..... 61

Editorial Applauds NRK Decisions on Nordsat
(Editorial; AFTENPOSTEN, 7 Nov 77)..... 64

CONTENTS (Continued)

Page

PORTUGAL

Briefs

Azores Satellite Communications 66

BRIEFS

UN BROADCASTS TO SA--Johannesburg--The duties of the South African Broadcasting Corporation [SABC] did not include the blocking of foreign broadcasts into South Africa, Mr Andre Walters, a public relations officer of the SABC said here today. He was reacting to reports that the United States had agreed to start broadcasting United Nations shortwave programs to the republic early next year. According to a spokesman for the UN Radio Service, the main purpose of the daily broadcasts would be to persuade South Africans to do something about their isolation in the world. The broadcasts, in English, Afrikaans and the languages of the black people of South Africa, would not have military overtones, the spokesman said. According to reports from New York this will be the first time the UN will broadcast to a specific country without that country's permission. The UN spokesman confirmed that they would be using as many broadcasting stations as possible, including the powerful Voice of America transmitter in Liberia. Two English, one Afrikaans and two black commentators will be recruited. Mr Walters told a Johannesburg newspaper today that the matter was an international affair which would probably be taken up by the South African Government. [Text] [Pretoria Department of Information in English 1013 GMT 14 Dec 77 LD]

EARTH SATELLITE COMMUNICATIONS PROJECT--The minister of housing and public buildings, Lieutenant Colonel Lukakamwa, has signed a 28-million shillings contract with (?Mehtas Local) Company to construct an earth satellite communication station at Mpoma, near Mukono, in about 1-1/2 years. The project, known as (?Ugesa), will be a much bigger station than the Giligili earth satellite [as heard] near Arua. While the Giligili earth satellite has its (?gateway) through Goonhilly in Britain, the one at Mpoma will have direct communication with seven countries on the preassigned basis, that is Zaire, Nigeria, the United States, Britain, West Germany, Italy and Saudi Arabia. The station will have to have direct communication with 31 other countries on demand. It will be possible to coordinate the Giligili Station with the (?Ugesa) for communication purposes, both nationally and internationally. The communication equipment will be supplied by a Japanese firm, the Nippon Electric Company. [Excerpt] [Kampala Domestic Service in English 1400 GMT 14 Dec 77 LD/EA]

SOVIET-BURUNDIAN AGREEMENT--An agreement was signed in Moscow today on cooperation in the field of broadcasting between the USSR State Committee for Television and Radio Broadcasting and the National Radio of the Republic of Burundi. The agreement was signed by Orlov, deputy chairman of the USSR State Committee for Television and Radio Broadcasting and (Gahungu), general director of the National Radio of the Republic of Burundi. [Text] [Moscow Domestic Service in Russian 1130 GMT 16 Dec 77 LD]

CSO: 5500

CONFERENCE AGREES TO SET UP ASIAN NEWS SYSTEM

Colombo WEEKEND in English 11 Dec 77 p 3 BK

[Text] Seventeen Asian nations last week agreed in principle to establish a system of Asian news exchange.

Consensus on this was reached at last Friday's concluding sessions of the meeting of experts on development of news agencies in Asia.

The meeting appointed a six-member working group headed by Mr C. E. L. Wickremasinghe, leader of the Sri Lanka delegation and comprising Mr P. S. Kasbekar (India), Mr Mohamed Nahar (Indonesia), Mr Youri Laouri (Iran) and Mr Lhavagjarvyn Zantav (Mongolia) to prepare an interim report.

The report to be presented to the intergovernmental conference on communication policies in Asia organised by the UNESCO for June, 1978, will deal with:

--A feasibility study of establishing an Asian network, based on an exchange of news between national agencies.

--The interests of news agencies in the region to participate.

--To identify national news agencies in the region to participate.

--To identify national news agencies in the region willing to act as clearinghouses or redistribution centers.

--To determine the technical needs of the system and the agencies interested in participating in network.

It has been resolved to invite the UNESCO and the International Telecommunications Union to cooperate with the working group.

The meeting noted that Asian news agencies have special functions as instruments of social progress. There is much that national news agencies

can do to help in promoting economic and other areas of cooperation among nations of Asia, the meeting noted. It expressed conviction that news exchanges in Asia can contribute to the promotion of peaceful cooperation among Asian nations.

The conference has proposed that Asian news agencies endeavour to develop a set of criteria for news values for purpose of news exchanges. It has also proposed that accuracy, truthfulness and objectivity of information should be guidelines for increasing the information and news flow among Asian countries.

The conference has agreed that news and information should not mislead, but should enlighten, create national identity and promote international cooperation. Noting that news reports and articles should reflect a fair and balanced account of events, the conference has agreed that emphasis should be given to national, regional and subregional efforts at overcoming poverty, hunger and diseases and at modernisation.

CSO: 5500

ADDRESS TO NONGOVERNMENT BROADCASTERS MEETING

Jakarta Domestic Service in Indonesian 0700 GMT 15 Dec 77 BK

[Text] The director general of radio, television and film, Sumadi, has expressed the hope that development of nongovernment radio broadcasting should concentrate on organizational, broadcasting and management sectors.

In a keynote address at the opening of the second workshop of the nongovernment Radio Broadcasting Development Authority in Jakarta today, Sumadi reminded his audience of a letter of decision of the information minister, dated 8 December 1977, reaffirming the Indonesian Commercial Radio Broadcaster Association, or PRSSNI [Persatuan Radio Siaran Swasta Niaga Indonesia], as the only professional organization in the sector of commercial radio broadcasting. This means that commercial radio broadcasters who are not members of the PRSSNI will not get government recognition and access to facilities. He hoped that the future status of nongovernment radio broadcasters who work for other government agencies, such as the Indonesian Republican Armed Forces, the Agriculture Department and so on, would be decided upon in the workshop.

With regard to radio broadcasting, Sumadi called on nongovernment radio broadcasters to become true partners of RRI [Radio Republik Indonesia], especially in anticipation of the convocation of the People's Consultative Assembly Plenary Session in March of next year. Specifically speaking, he said that besides presenting entertainment programs, the nongovernment radio broadcasters should also present programs conforming with the interests of a developing nation, such as relays of RRI news bulletins.

Speaking on matters of management, Sumadi reminded all nongovernment radio broadcasters that each one of them must soon establish its legal status in order to obtain a permit to operate.

Sumadi also disclosed that at 0001 GMT on 23 November 1978, a new allocation of broadcast frequencies established by the International Telecommunications Union [ITU] will take effect. Indonesia has been allocated 120 radio broadcast channels. RRI will use 68 channels along with 20 cochannels,

while the rest will be assigned to nongovernment radio broadcasters. As of that moment, the use of radio frequencies outside those allocated by the ITU is illegal and will be treated as such, because to do so would interfere with other broadcasts and telecommunications and would only invite foreign protests.

The workshop will close on 19 December 1977.

CSO: 5500

COUNTRY TO JOIN UNDERSEA COMMUNICATIONS SYSTEM

Colombo CEYLON DAILY NEWS in English 12 Dec 77 pp 1, 5 BK

[By Patrick Cruez]

[Text] Sri Lanka will now become part of a massive undersea cable communication linkup covering five countries in South Asia.

The minister of posts and telecommunications, Mr Shelton Jayasinghe, said Sri Lanka had indicated its willingness to contribute to the cost of laying this ASEAM undersea cable linkup connecting this country with Japan, Hong Kong, Singapore and India.

Mr Jayasinghe said when this linkup was on the drawing boards 2 years ago Sri Lanka was to be bypassed. If that was allowed to happen the cable which would begin from Japan would have gone directly to Madras from Singapore skipping Sri Lanka.

If that happened a tieup with this massive South Asian telecommunication link could well have been lost for ever to Sri Lanka.

The linkup with the ASEAN undersea cable was a part of the government's development plan to bring modern telecommunication systems to the country. A four-man team of senior engineers was now abroad studying two modern telecommunication systems.

The United States and France were now using the "Time and Space" System which was the electronic switching device connecting communications internally and internationally. Some other countries were linking up with communication satellites.

Here in Sri Lanka telecommunication development had been so neglected that what was in existence was the outdated "cross bar" system which was installed during the colonial era. The ineffectiveness of the cross-bar system was felt today because although the country needed thousands of extra telephones the type of cross-bar switchboard currently in use did not have provision for massive expansion.

As a matter of priority the government had released funds, and supplies were on the way to increase the telephone capacity of most of the principal towns. When that equipment was installed the towns on the outskirts of Colombo would be able to have a further 6,000 telephones.

Rural switchboards would also be able to increase capacity ranging from 30 to 60 percent and the direct dialing system would be further expanded appreciably, said Mr Jayasinghe.

Referring to the microwave linkup between Sri Lanka and India, Mr Jayasinghe said he now found that India would benefit more when the linkup was established. However, since the last government had committed the country to such a linkup he would have to go through with it. India had agreed to bear a higher percentage of the contribution and has also undertaken to supply the equipment. Once the microwave linkup has been established it would be possible for a number of towns in both countries to have direct dialing telephones.

Mr Jayasinghe said he had emphasised the need for the government to pay greater attention to the development of telecommunication in the country. Telecommunication, power and water were the three things that marched ahead of any development. They did not march alongside development but ahead and if those three ingredients were neglected development in any sense could never be achieved.

CSO: 5500

BRIEFS

GDR-CSSR RADIO ACCORD--Prague--A protocol was signed in Prague on Friday on radio cooperation between the GDR and the CSSR in 1978 and 1979 by the chairman of the GDR State Committee for Radio and Rudi Singer, and the director general of Czech Radio, Jan Risko. The document provides for the expansion of cooperation in radio between the two states by exchanging information and material for all types of program. In the joint preparation of programs on the economic cooperation between the two countries, special attention is to be given to the important anniversaries and jubilees, in particular to the 30th anniversary of the victory of the Czech workers in 1949 and the 30th anniversary of the founding of the GDR. [Text] [East Berlin ADN International Service in German 1630 GMT 16 Dec 77 LD]

CSO: 5500

PROGRESS IN RESTORING COMMUNICATIONS REPORTED

Beirut L'ORIENT-LE JOUR in French 4 Nov 77 p 2

[Text] In the communications field, Lebanon has exceeded the level reached in 1974. This is what the PTT [Posts Telegraph and Telephone] Minister, Mr Farid Raphael, claimed yesterday. In a press conference, he indicated that in 1978, 80,000 new telephone lines would be laid, and that 4 months from now, all the telephone exchanges would be working perfectly. He specified that "the desired quality would not, however, be reached before 1978." Prior to this, Mr Raphael had inaugurated the re-starting of the al-'Arbaniyah station, which will extend its capacity from 5 to 13 satellite lines.

Mr Raphael also inaugurated the resumption of the telex service (2,000 lines which will be allotted between now and next May), addressing the following telex message to the Head of State:

"Mr President:

"I am happy to address to you the first totally automated telex message, after the overhaul of the Beirut telex station.

"I am convinced that this normalization of the telex service permitting 2,000 subscribers to exchange their telex communications throughout the world automatically and in both directions, will provide a very beneficial impetus to the various sectors of the national economy.

"This return to normal is only one stage of an overall expansion plan aiming at satisfying, in accordance with your directives, the expansion needs of this country, and including the installation of 2,000 new lines during the first half of 1978, and a new electronic center with 575 terminals in 1979.

"I confirm to you that the operation of this telex center, the automatic international telephone exchange, and the Beirut-Marseilles, Beirut-Alexandria,

Beirut-Cyprus-Greece-Marseilles cables, and later the al-'Arbaniyah ground station will place our international communications system at a higher level than that of 1974.

"I take this opportunity of conveying to you, for myself and in the name of all the Telegraph and Telephone personnel, as well as all the specialists who contributed to the overhaul of this center, our most sincere wishes for Lebanon to continue its progress to peace and prosperity under your leadership."

The PTT Minister
Farid Raphael

Press Conference

Accompanied by the Director General for Telephones, Mr Remi Chami, and the Director General for Information, Mr Charles Rizq, the Minister held a press conference to make the following statements:

"Ten months ago, when I took over at the PTT Ministry, I realized the extent of the damages: regional communications cut off, transmission centers destroyed, telex center out of order, the international communication lines reduced to the Beirut-Marseilles cable, whose output had dropped considerably, several centers destroyed (Sinnael-Fil, 'Alayh, Tammana, Biskinta, Jubb Jannin, Ra's Ba'Lbakk), the others suffering from lack of maintenance, lack of individual parts, and disorders caused by the events. In all [it was] a network seriously damaged by the fighting (in Beirut, more than 60,000 out of 160,000 lines out of order), to such an extent that in certain areas, overhauling was equivalent to the installation of a new network. Now, even before the events, the administration had not been able to evolve either with regard to the requirements or the installed equipment: the routine methods and shortage of cadres set restrictions on its action and aroused continuous complaints from the public.

"This same administration, who more than any other State administration, suffered through the events, having even lost its offices, part of its documents, all its stock of equipment and spare parts, deprived of means of transport (30 vehicles retained out of 260) had the duty to rectify the situation."

Repairs

"We had assigned priority to a program of repairs of the damages, devoting to the international communications sector the attention it merited.

"In the area of local communications, we restored regional communications (Tripoli, Sidon, Zahlah, 'Alayh, Juniyah, Brummana, Bikfaya...), restored nearly 70 percent of the damaged network, permitting the connection of close to 45,000 subscriber lines in Beirut and its suburbs, put back into service 2,000 lines of the 'Alayh exchange, temporarily

replaced exchanges destroyed with advanced manual exchanges certain exchanges which had been destroyed (Hammana, Jubb Jannin), put back in order most of the lines diverted during the events, carried out 'maintenance' work on exchanges and annexed equipment, such as batteries, air conditioning, emergency generators.

"We do not wish to omit the reference to inadequacies, but it is impossible to deny the importance of the work completed and to fail to do justice to those of our officials who performed it under frequently very difficult conditions."

Disturbances

"It should be stated that these results were minimized in the eyes of the public because of the problems the administration faces in respect to the new requirements of the users.

The shifts of population and activities from one sector to the other disturbed considerably urban communication. For example, on one hand, we have available about 10,000 unused lines in the Riad Solh exchange, whereas we are unable to satisfy 9,000 applications for subscription at Dora and 5,000 applications at Mazra'ah. On the other hand, for instance, the Mazraa and Achrafieh, foreseen as mainly residential areas, suddenly become commercial and cannot provide for the increase in communications. The result is a congestion, which the public experiences as faulty tone quality.

The same thing happens in the communications from one exchange to the other, when the changes in the communications cause blocking, with calls being completed with difficulty at certain times.

"Add to that the fact that line availability is insufficient when the network is not installed.

"All these problems are being studied and solved. 'Redimensioning' the network will permit the whole system to return to an operational state not just equal to but superior to the one prevailing before the events. I should however draw your attention to the fact, that the delivery of certain equipment may require considerable time, from 8 to 12 or 14 months.

"Hence, while confirming that the whole of the exchanges and the network will be restored to a good condition within a period of 3-4 months, I must state, that we can only achieve the desired quality towards the end of 1978."

Expansion

"But our ambition is also to satisfy the need for expansion, and with this in mind, we provided in the program of operations to be implemented in 1978, the installation of 80,000 new lines, i.e., an increase of one-third of the existing equipment. This is a gigantic enterprise, in view of the investments for exchanges, buildings, networks, and for the effort of adaptation required on the part of the administration.

"By the end of the first half of 1978, the problems of the districts of Mazra'ah, Ra's Beirut, Shiyah Judayah, and Dora will be solved, and it will be possible to satisfy all the applications for subcriptions. Juniyah, Sidon, and Tripoli will be in the same position at the end of the year.

"As regards international communications, we are happy to declare that we have not only completed all the repairs, but we exceeded the level of equipment in service in 1974: the Beirut-Marseilles cable was revised, the Beirut-Cyprus-Greece-Marseilles cable was put into operation, the al-'Arbaniyah station was restored to working order, and its operation will be increased from 5 to 13 directions, and the 2,000 line automatic telex center, operating again since this morning.

"We are undertaking to extend the automatic telephone connections with Greece (in 3 to 4 weeks) as well as the various European countries.

"We are beginning to install 2,000 new telex lines which will be put into operation progressively from next May, while we are calling for bids on a new bilingual electronic center with 5,750 telex terminals to be delivered around mid-1979."

9018
CSO: 5500

MOSCOW - YEREVAN SATELLITE COMMUNICATIONS LINK ESTABLISHED

Yerevan KOMMUNIST in Russian 5 Nov 77 p 4

[Article by Yu. Kozlov, Deputy Minister for Communications Armenian SSR: "On the 'Orbita' System"]

[Text] On the eve of the renowned 60th anniversary of the Great October Revolution, residents of Yerevan and the Ararat Valley received the opportunity to watch Central Television's fourth program being retransmitted on channel five on the azure screens of their television sets.

This became possible after the "Orbita-2" station in Yerevan was put into service providing permanent, reliable communications to the republic across the space bridge, Moscow - satellite - Earth - Yerevan.

Henceforth, Armenia, in addition to existing long range land and underground communications lines connecting Yerevan with Moscow, has gained a stable, high-quality communications channel with our nation's capital through "Molniya" artificial earth satellites.

Today, with the assistance of the space communications station, Yerevan is already receiving two supplementary Central Television (TsT) programs--the fourth and the "Orbita" program which is basically a repeat of the first TsT program with a three-hour time shift. These transmissions are received in color. Through the "Orbita-2" station, the republic received radio programs from Moscow with the equipment permitting reception of these programs in stereo. By the end of the year, with the introduction of the broadcast portion of the entire complex, it will be possible for the television studios of Yerevan to join the Central Television and Intervision networks.

The capabilities of satellite communications are expanding every year. By 1978, the space communications station will have direct telephone and telegraph lines with Moscow.

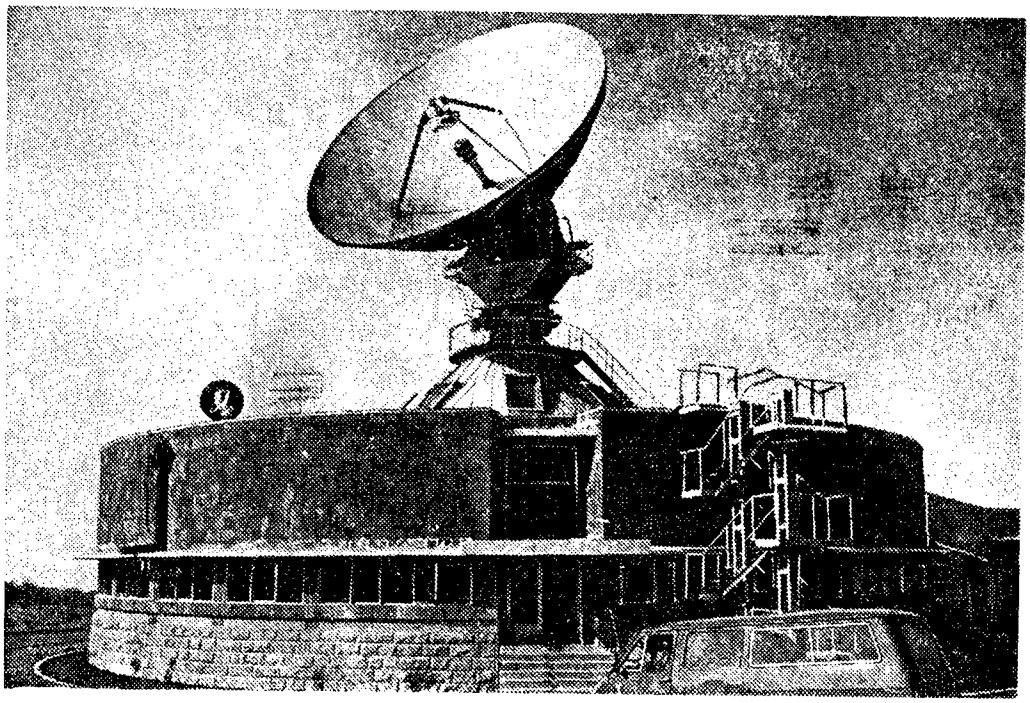

An extremely important advantage of space communications lies in the capability to transmit photocopies of the principal newspapers from Moscow directly to the printing presses of the capitals of the union republics and remote cities of the Soviet Union. With the aid of the high-speed "Gazeta-2" equipment, a page of "Pravda" will be transmitted from Moscow to the Yerevan printing office in only two and one-half minutes. This will make it possible for Yerevanites to receive the principal newspapers at the same time as Moscovites.

"Orbita-2" in Yerevan has still another important assignment--with the assistance of ground radio relay lines, the Central Television programs received from space will be relayed to the sister republics--Georgia and Azerbaydzhan. In the future, the Yerevan - to - Moscow space channel will transmit more and more information, and each year its capabilities will be expanded and improved.

The design and construction of the station were accomplished in record time. The project was executed by the Yerevan branch of the State Planning Institute for the USSR Ministry of Communications (Chief Engineer of the project was L. Kolupayev). To the Institute's credit there are many "Orbita" stations which have been designed for regions of the Far East, extreme North, and Siberia. The Yerevan station was completed along an independent design. The project's author, architect R. Asatryan, applied many interesting and original solutions.

The building's construction was carried out by the RSU collective of the "Armsvyaz'stroy" combine. The builders worked well at full performance and completed construction of the station in only 10 months. Particularly distinguished were the foreman R. Gegyan, bulldozer operator A. Manukyan, arc welder Zh. Yeremyan, concrete worker A. Gevorkyan, carpenter M. Shakhbazyan, electrician G. Oganesyan and the ATP drivers from the "Armsvyaz'-stroy" combine V. Matevosyan, A. Martirosyan and A. Ayrapetyan.

The State Certification Commission accepted the station's building for operations with a rating of "excellent".

Created by the labor of a large group of people, the Moscow - Yerevan space bridge lives, functions, draws the people still closer together, and strengthens their friendship.

9082
CSO: 5500

BRIEFS

CHIEF OF ORBITA-2 STATION COMMENTS--The construction and placing in operation of the "Orbita-2" station is yet another vivid example of the fraternal cooperation amongst the peoples of our nation. Tens of the Union's enterprises manufactured the equipment for the station. The entire assembly and adjustment sequence was performed by a special-purpose brigade from the Podol'sk Plant for Electrical Assembly Procurement headed by A. Zadykyan, the plant's section chief. And it must be said that the boys made a conscientious effort and performed all the work at a high level of quality which allowed us, the operators, to begin the reception and relay of transmissions quickly and confidently. [Text] [Yerevan KOMMUNIST in Russian 5 Nov 77 p 4]

ASSEMBLY BRIGADE FOREMAN COMMENTS--To the credit of our assembly crew stand 20 "Orbita" stations which have been constructed in regions of the Far East, extreme North, and on Kamchatka and Sakhalin. And each such station is specially memorable and dear to us. We shall carry away with us from Yerevan the warmth of friendly hearts, and a special feeling of collectivism and partnership. The work for many was complex and unfamiliar. The people, therefore, tried to see into the heart of the matter, and master the art of assembling complex and precise technological equipment. In so doing, each tried to offer his own interesting solutions to the technical problems arising during the assembly of the equipment. Examples of valiant labor were displayed during the "Orbita" construction by V. Novikov, G. Treshchalin, A. Vasilenko, engineers S. Nersesyan and A. Nunyan, electrician G. Movsesyan, and others. As a result of this friendly and selfless work, all the station's systems were assembled with great precision and quality, and Yerevan's viewers were able to watch on their own azure screens the many interesting programs on the eve of the Great October Revolution holiday. [Text] [Yerevan KOMMUNIST in Russian 5 Nov 77 p 4]

CSO: 5500

NEW DENMARK-NORWAY TELECOMMUNICATIONS CABLE BEGINS SERVICE

Oslo AFTENPOSTEN in Norwegian 2 Nov 77 p 20

[Unsigned article: "New Sea Cable Gives Better Telecommunication Contact With Europe"]

[Text] Today the Norwegian Telecommunications Administration inaugurates the new undersea cable which was laid this summer between Norway and Denmark. This will make it easier for all telephone subscribers in Norway to make contact with Denmark and the rest of Europe, Section Chief Nils Taranger of the Telecommunications Administration's lines section tells AFTENPOSTEN. The new cable will immediately provide 700 new overseas lines above and beyond the present heavily overloaded 600 telephone channels. The maximum capacity of the cable is 2700 channels.

"We must wait for the inauguration of the rest of the capacity after we get a new radio link between Arendal and Oslo and the new tower on the Roeverkollen in Oslo in full use. Then we will be even better equipped to face the steadily rising traffic," Taranger says.

The cable is 144 km long. It was laid from Arendal by way of Vrakvika near Hisoey and the laying cost 36.2 million kroner. The costs were shared by the Norwegian Telecommunications Administration and the Danish postal and telegraphic network, joint owners of the cable.

The 700 new connections thus far have been switched into existing connections which have up to now not been fully utilized, Taranger points out.

In addition to carrying telephone traffic, the new cable will also be able to carry telex traffic and data traffic. It is connected to the new television center in Oslo by a radio link.

The laying of the cable took place in several stages. Japanese companies delivered the cable and the electronic equipment, the amplifiers were mounted on the cable in the port city of Vigo in Spain and the main cable was laid by a British cable vessel. It is now under observation by a computerized measuring apparatus.

Norway has the world's greatest undersea cable mileage, and the new cable to Denmark has a capacity four and one half times greater than the existing cables. Predictions indicate that the 2700-channel capacity is sufficient to handle traffice for the next ten years.

8739
CSO: 5500

TECHNIQUES USED IN INTRODUCING TIME-DIVISION SWITCHING SYSTEMS

Milan TELECOMUNICAZIONI in Italian Nos 60-61 Sep-Dec 76 pp 3-12

[Article by Paolo de Ferra, of the STET-Telephone Financing Company, and Admeto De Giovanni, of the SIP (Italian Telephone Operating Company), originally presented to the International Switching Symposium, Kyoto, October 1976]

[Text] The aim of this paper is to point out the main aspects of introducing time-division (TD) switching systems into existing telecommunications networks. The first part deals with the essential features and technical-economic principles pertaining to both local and transit time-division switching systems. In the second part, problems and parameters concerning the adoption of new time-division switching systems for large local networks are discussed. Then special problems concerning rural and long-distance networks are taken up and possible solutions are pointed out. The third part deals with the use of time-division systems in existing step-by-step local networks of different sizes. Some general guidelines are obtained from an analysis of representative models and actual cases. The fourth part takes up features pertaining to the introduction of supplementary telephone services and synchronous data service. In the conclusion, the most significant guidelines for facilitating the introduction of new time-division systems are summarized.

1. Introduction

Today, a constantly increasing number of administrations and constructors are tending to adopt time-division digital switching in place of space-division switching for 4-wire switchboards in the long distance network. In fact, for many reasons it can be believed that digital switching will be competitive at any rate in that sector. In Italy, considerable interest has already been shown for many years in digital techniques and recently the Ministry of Post and Telecommunications has scheduled experimentation with various digital transit exchanges in its own long distance network.

It should be noted that time-division techniques have already been used in an economically suitable manner in the transmitting sector with PCM [pulse-code modulation] systems. An approximate indication of the costs of the various transmission systems is given in figure 1, which shows how the PCM systems are more economical, both in comparison with low frequency and in comparison with FDM [frequency division multiplex] systems, over a broad range of circuit lengths (1). In fact, several million PCM channels are already in operation in many countries. In Italy, for example, 20-25 percent of all the high frequency channels owned by the SIP are already under the PCM technique.

The advisability of using numerical techniques increases considerably when one or both exchanges used at the ends of a circuit are digital. With reference to figure 1, when, for example, the cost of digital terminal t_D is 2/3 of t_A, the present upper limit of the field of advisability of digital systems (L) increases, respectively, 3 and 5 times under two conditions.

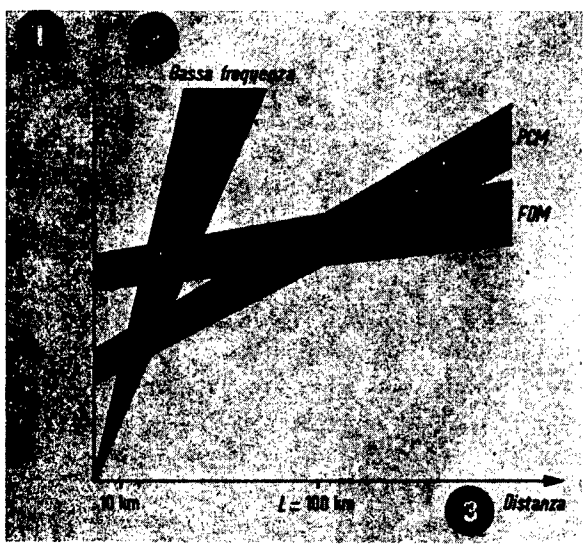

Figure 1. Transmission costs (per channel).
Key: 1. cost; 2. low frequency; 3. distance

It is normally anticipated that the progressive extension of transmission and switching in digital form will follow from that, in order to make up an integrated digital network. Obviously, this network will have the maximum extent when not only the 4-wire exchanges but also present 2-wire exchanges are under digital system.

Figure 2 gives an approximate indication of the costs for automatic 2-wire transit switching with various limit capacities and produced with various switching methods, on the basis of information provided by a manufactuer. In an analog environment, costs are represented as follows:

[a.] Costs depending on the limit capacities of the exchange, increasing proportionately to the increase in the number of switching stages and the complexity of the system. The following might be a very approximate expression of the cost:

$$\text{cost per connection} = \text{limit capacity}^{k}$$

in which $k = 0.2 \div 0.5$.

[b.] Colored areas: costs not depending on the limit capacities. For digital exchanges, the costs for voice and signaling conversion are shown separately (darker areas).

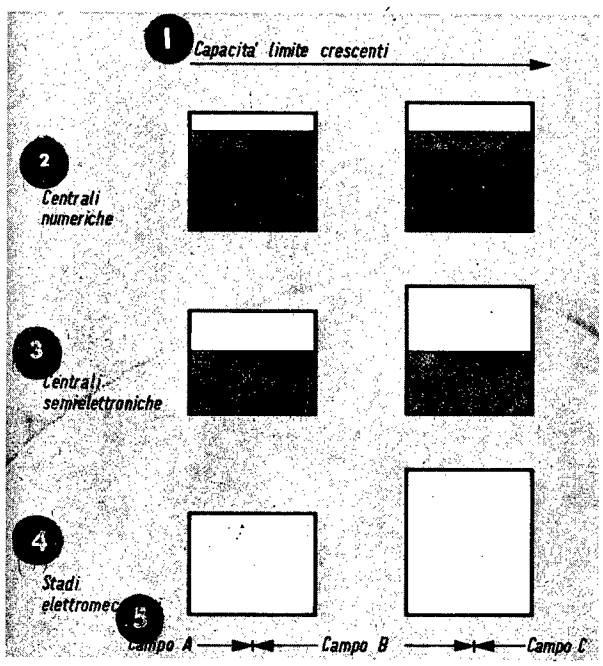

Figure 2. Transit switching costs (per connection)
Key: 1. increasing limit capacities; 2. digital exchanges; 3. semielectronic exchanges; 4. electromechanical stages; 5. field

The drawing was made so that costs will be equal:

[a.] Between semielectronic switching and electromechanical switching in the left-hand column.

[b.] Between digital switching and semielectronic switching in the right-hand column.

Thus, three capacity fields (A, B, C) are shown, each of which indicates the possibility of the existence of a field of suitability for each technique (electromechanical, semielectronic and digital). It should be noted, however, that the drawing is purely for guidance. For example, the existence of field B is not even proved. At any rate, a basic indication obtained from figure 2 is that the greater part of the costs for digital switching in an analog environment are due to voice and signaling conversion (2). For this reason, when digital switching exchanges are installed in totally or even only partially digital environments, they become considerably more competitive. Consequently, it seems predictable for the future that the integrated digital long distance network will finally be extended to the present 2-wire switching exchanges. This extension finds, however, a limitation in short distance connection in a local network. On this level, the distribution stages and the user stages form a single unit with regard to the operations of routing, control, signaling, and so on. Therefore, a local switching system of the analog type is inevitably destined to compete with the adoption of digital transit stages in the local network itself. The basic topic of this paper refers, however, to local systems designed expressly for digital switching, starting with the first distribution stage.

Various technical solutions are possible, in these systems, for the user stages, including the following:

[a.] Space-division switching followed by CODEC [coder-decoder].

[b.] Time-division switching followed by lower cost CODEC.

[c.] Delta coding on the user circuit level followed by digital switching and delta/PCM converters (3).

[d.] Direct PCM coding by means of integrated components (4).

At any rate, provided the basic local distribution stage is performed with the digital method, it does not matter which of those solutions is adopted, especially when future developments in this field are considered. The principal objective is to obtain substantial economic competitiveness with regard to analog local exchanges for internal connections. Once this objective has been attained, considerable savings will be achieved automatically in connections between exchanges.

Moreover, adoption of the digital technique in local switching leads to a variation in the equalization of cost between subscriber lines and connection circuits by lowering to about 1,000 meters the limit of suitability for decentralization of the user stages with regard to transit stages and thus making savings possible in the subscriber network.

An entirely digital widespread telephone network can be used suitably also for other services, like data services, for which other savings can also be expected in this field.

It should be pointed out that the marginal economic advantages just described may be critically important to countries with a low per capita income. In fact, for some countries with a high per capita income it is agreed that semielectronic systems with recorded program control are economically suitable only if account is taken of greater revenue for new supplementary services and the savings in costs of operation. In that case, in other countries, in which the costs of operation are already low and in which there is probably little interest in sophisticated services, it may turn out that the only valid choice is digital systems, precisely owing to the above-indicated marginal advantages.

The new digital systems present, however, no slight shortcoming in comparison with other systems: the cost of decoders, of demultipliers and of signaling converters needed for interconnecting the new digital equipment with the old-type analog equipment. This cost may be a serious burden in the initial phase, but it decreases subsequently and finally disappears. The use of suitable methods of introduction may reduce this burden considerably.

The objective of this paper is to show the principal technical and economic aspect of introducing time-division switching systems in existing telecommunications networks, with special emphasis on local telephone networks. No specific plan or program for introducing a time-division system in a national network is given here. Nevertheless, special attention is devoted to problems of Italy's telephone network and more specifically to that part of the network (over 50 percent) equipped at present with step-by-step electromechanical switching systems. With regard to technical solutions, special reference has been made to the PROTEO switching system (5), at present in an advanced stage of development by the SIT-Siemens company.

The system is designed to meet not only the requirements of telephone service, but also the needs of data service. It consists of three main subsystems: peripheral exchange, transit network and central control.

The peripheral exchange, with PAM [pulse amplitude modulation] type switching, has a capacity for 8 groups of 256 users, for a total of 2,048. It can be decentralized with regard to the transit network and central control.

The transit network is a digital switching system capable of handling up to 512 2 kilobit/second PCM systems (15,000 channels). Up to seven sections of the transit network can be decentralized with a maximum of 32 PCM systems each.

The central control can service 150,000 calls at peak time, with a maximum of 32 peripheral exchanges and 30,000 users.

2. General Features

2.1. Large Local Networks

It might seem logical to install a new type of exchange in an existing local network by observing the same criteria adopted for traditional systems and by keeping the traditional routing and signaling plans for outside traffic unchanged. From a technical point of view, this would be possible, in view of

the flexibility of the new systems, however it is not advisable to proceed in that way, especially in networks equipped with step-by-step systems. In fact, several difficulties would be encountered, including the following:

[a.] Unsuitability of the old routing and signaling systems for interconnections between new-type exchanges, with resulting disadvantages both to users and administrations.

[b.] If suitable methods are not adopted, need for expanding the old-type switching stages also at the time of introducing exchanges solely of the new type.

When new systems with a recorded program control are introduced in a network, these kinds of difficulties are frequent, in addition to management and personnel training problems. When the new system is digital, the situation is further complicated by the completely different philosophy of the system for which, as a result, all the connections between new and old systems are subjected to the disadvantage of a need for converting both voice and signaling. The cost of conversion may be considerable. For example, if it is assumed that the present value of the cost of a new user's line under traditional technology (including switching, signaling, transmission, maintenance and locals) equals one, the corresponding value estimated for a new user's line under digital technology should not be greater than $d = 0.9$. It should be realized, however, that, in the initial phase of introduction of user's lines with new technique in a completely analog environment, the cost of conversion (whose value might be around $c = 0.2$) must be added. Obviously, it is not advisable to connect two new-technique lines with each other passing through old-technique switching stages, because, in addition to the cost of selectors, two times the cost of conversion in the environment of the same connection would be encountered. For this reason, when new-technique exchange networks are introduced, they are usually interconnected with each other directly by means of a superimposed network without passing through the old technique, which may thus be left completely "frozen."

It should be pointed out, however, that even if this is done, under certain circumstances the disadvantage pertaining to connections between new and old lines may be such as to make the introduction of digital local exchanges uneconomical.

There are five significant parameters for a through analysis of these situations; namely:

d = ratio between cost of a new digital line and cost of a traditional line.

c = initial disadvantage (with the same cost unit).

r = rate of natural use increase in the local network.

t = amortization period.

i = financing interest rate.

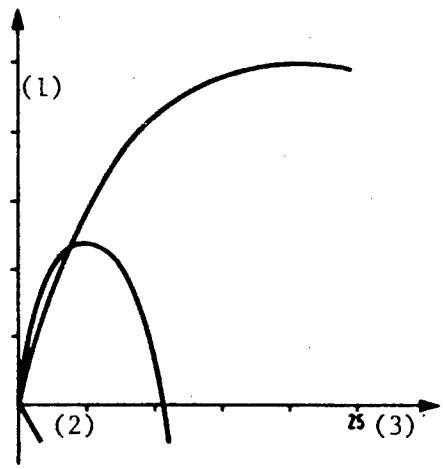

Figure 3. Difference in cost for introduction.
Key: 1. difference in cost (present values); 2. curve; 3. years

If it is assumed that natural increase and replacement for obsolescence remain stationary, the trend in time of the cost for values of the parameters regarded as "normal" is as indicated by curve A, figure 3:

[a.] Initially, the difference between the overall cost per line (present value) with the new technique and the cost that would be encountered with the old technique is greater than zero.

[b.] After some time, a "point of no return" (NRP) is reached, beyond which the cost of expansions under the new technique are lower than the cost under the old technique. At the NRP, the difference in cost reaches its maximum value.

[c.] Subsequently, because of the constantly decreasing cost of the new system, a "point of capital recovery" (CRP) is reached, according to which the greater cost borne previously is entirely balanced by the advantages peculiar to the new system. The new system offers only net profits from this point forward.

The most impostant factors in the process of introduction are the times needed for reaching the NRP and CRP. Analyses have been made of the dependence of

these times on variations in the parameter values and the following conclusions were reached:

1.) Obviously, the most important parameter is d (ratio between cost of the digital system and cost of the previous system). It should be observed that, if an intermediate technique (semielectronic) is adopted between the electromechanical and the digital technique, the value of d increases and may have an adverse effect on a subsequent introduction of digital techniques.

2.) The rate of increase r has considerable influence. Low rates of increase (typical of countries with a high use density) are an obstacle to the introduction of digital techniques, while high rates of increase may make it possible to recover greater initial costs in a rather limited number of years. Within a given country, recovery may be faster in some areas rather than in others.

3.) The initial disadvantage c also plays an important part. Since it includes every possible kind of disadvantage, the aim of an adequate introduction strategy is precisely to reduce their effects to the minimum.

4.) The other parameters (amortization period and financing interest rate) have relatively minor influence, in the field of variation under consideration, on the times for reaching the NPR and CRP.

5.) When the parameters take on very favorable values, curve B (figure 3) is obtained. If d + c = 1 (as in the case of curve B), there are no problems of recovery of greater costs. If, on the other extreme, all the parameters take on unfavorable values, curve C is obtained. In this case, although economic advantages may be dreived starting at the "point of no return," they may prove to be insufficient for compensating for interest on the capital estimated for reaching that point (in other words, in this case it would be uneconomical to introduce digital local exchanges).

2.2. Rural Areas

All that has been set forth above is applicable especially to large local networks, whose structure is not affected much by the presence of long distance circuits under analog or digital technique. For small rural networks, there are some factors that oppose the introduction of digital techniques, including the following:

[a.] The relatively large number of channels in first order multiple PCM.

[b.] The relatively small capacity of the exchanges, which may often often be put in relation to field A in figure 2.

On the other hand, the use of digital switching systems in small rural networks is favored by three reasons:

A.) In rural areas, traffic interest is oriented more toward long distances. Moreover, the distances between rural exchanges and the respective higher level exchanges make PCM transmission competitive of itself. Therefore, digital switching sytems are subject to smaller burdens in comparison with their use in large networks.

B.) Within a rural area the burdens pertaining to traffic between the new and the old technique may be smaller. For example, local connections can be made by means of low-cost converters (for example, PAM/low frequency instead of PCM/low frequency).

C.) In small networks (more than in large ones) an exchange is often replaced for reasons of saturation of locals. In those cases, an entirely new-technique exchange will be installed, without interconnection problems or burdens.

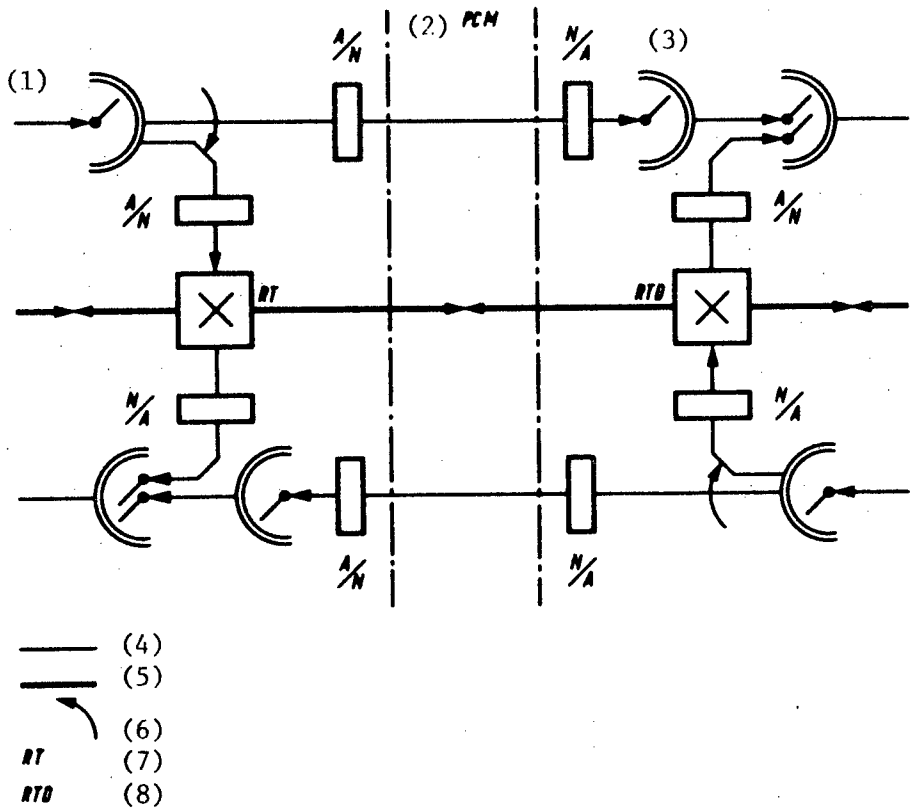

Figure 4. Routing for rural areas.
Key: 1. transit center; 2. PCM lines; 3. rural exchange; 4. last selection existing lines; 5. last selection new lines; 6. overflows; 7. transit network; 8. decentralized transit network

A typical connection diagram between a relatively large rural exchange and a higher level transit center is shown in figure 4. All the following can be observed:

[a.] Both the transit network for switching these circuits and the central control (not shown in figure 4) are installed in the transit centers on which the rural circuits converge.

[b.] The lines between digital exchanges are the last selection routes, not only for traffic between new-technique lines but also for the overflow of traffic between old-technique lines. It must be borne in mind that the so-called preventive use of circuits must be avoided for centripetal traffic.

[c.] Both subdivision of lines and the need for replacing old-technique equipmet are avoided, and there is no need for expanding the old technique, which can remain "frozen" in its previous form.

2.3. Long Distance Network

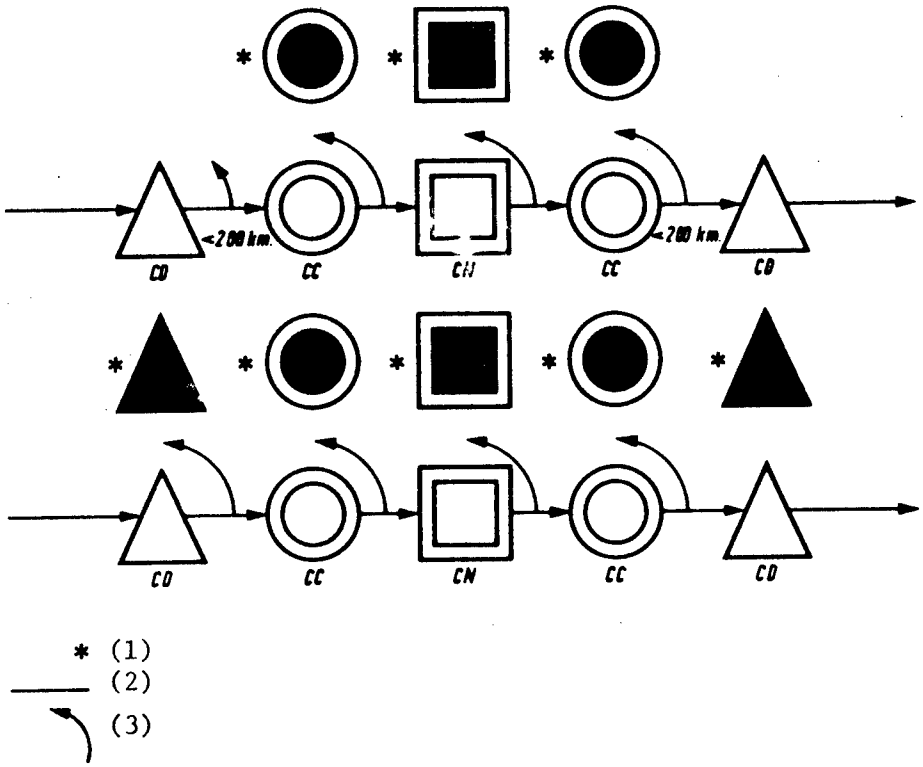

Figure 5. Long distance routings.
Key: 1. new digital switching sections; 2. existing last selection lines; 3. overflows

The introduction of digital stages in 4-wire transit centers has already been shown to be advisable, even when local networks continue with an analog technique (6). For the purpose of studying this topic, a network like the Italian network with three relationship levels -- national transit centers (CN), divisional exchanges (CC) and district exchanges (CD) -- was

considered. Two possible solutions were examined: the first one uses digital stages in expansion of the transit exchanges; the second uses them as separate sections belonging to a superimposed network. This second solution seems more advisable when old exchanges are under electromechanical technique and without signaling on a common channel. The diagram shown in figure 5 is particularly interesting for this last-mentioned case. The upper part shows the routings of a last selection in the case of district exchanges not equipped with digital-type local systems. On the other hand, in the lower part it is assumed that digital systems have been introduced in the CD.

In a solution like the one in the upper part, the decision to introduce the new superimposed network may entail greater costs in the intial phase. That is owing to the initial smallness of the superimposed network, or to its smaller yield and the smaller number of direct circuits. Nevertheless, even a relatively small increase in overall traffic may suffice for the advantages of this network to exceed the disadvantages. Moreover, when the district exchanges are equipped with digital systems (lower part), the advantages of the new network are perceptible right from the initial phase of introduction.

3. Network Structures

Local networks equipped at present with step-by-step systems are discussed for the purpose of studying and testing practical plans for introduction into networks. One of the features of these systems is the strict correlation between numbering and routing plans.

When this study was started, it was thought that the best procedure was to develop actual networks in accordance with various plans and to wait for the most suitable methods of introduction to be able to emerge from a subsequent analysis of the results. It was thought, moreover, that it was not necessary to use simulated models, in view of the risk that they would prove to be insufficiently representative. Nevertheless, during the study we realized that it was excessively complicated to work only on actual cases (7). In addition, the complexity of practical situations made it difficult to draw conclusions of a general nature. It was decided, therefore, that the best method for operating was to pursue three parallel approaches simultaneously: analytical considerations, studies of simulated models and testing on practical cases. In this way, guidance criteria that can be applied in most of the practical cases were established.

One of those criteria concerns traffic between new and old technique. Initially it was thought that the best way to avoid further expansions of the old technique was to go from the old to the new technique as quickly as possible (right from the first digit) and from the new technique to the old as slowly as possible. On the contrary, it was found, later, that this method would involve generally not only a constant initial expansion of old-technique selectors for the purpose of releasing first numbering digits, but also an excessive subdivision of junction lines entering in the old technique, with a resultant increase in the number of A/N converters required. A better solution

indicates that it is actually correct to go from the old technique to the new as soon as possible, but only insofar as that is made possible by the degree of filling of the field of numbering, and, on the other hand, to go from the new technique to the old without expanding the existing switching stages but taking care to use them as much as possible.

Another interesting guideline emerged for cases in which it may be necessary to increase the number of digits. This increase is to be performed for new-technique lines and not for old-technique lines (because that would entail an increase in the number of selection stages).

Other criteria are applicable in connection with the sizes of the various networks. In this respect, the Italian situation is as follows:

a.) For areas of decreasing importance, one, two or three digit district codes are used. The corresponding user numbering is with six or seven digits, five or six digits, four or five digits.

b.) In view of the fact that the maximum length of the national numbering is nine digits, one more digit can be used in case of necessity.

3.1. Large Local Networks

Special attention has been devoted to a study of networks with a two-digit district code. As has already been pointed out, at present user numbering is with five and (more frequently) six digits. Seven-digit user numbers are permitted, nevertheless, and are already used sometimes. All the first digits assigned to local numbering are normally used, but for each of them there is, at least, a second digit that is available or can easily be made available.

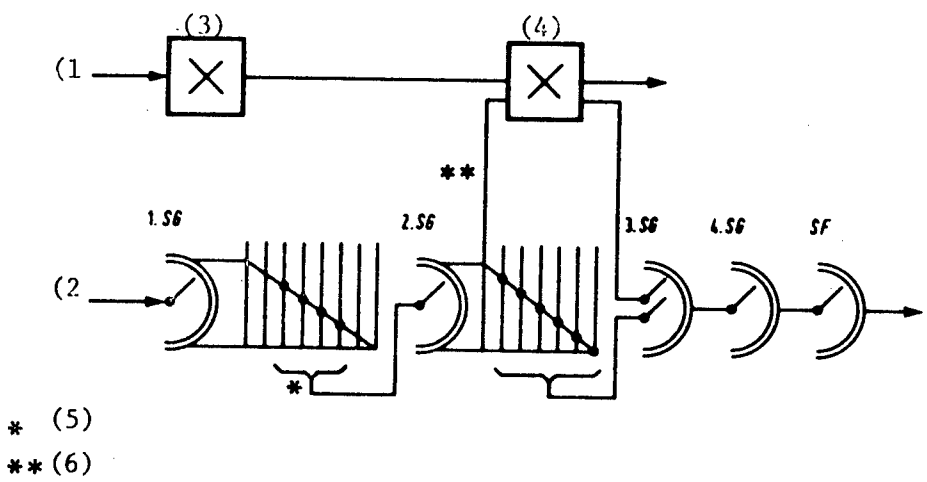

Figure 6. Routings in a large local network.
Key: 1. new system; 2. old system; 3. originating exchange; 4. destination exchange; 5. first digits assigned to the local network; 6. second digits available for expansions

In the case of six-digit user numbering, the most suitable solution is the one in figure 6. If the number of new-technique lines is made proportional to the number of old-technique lines for each first digit, it is not necessary either to expand or change the old-technique group selectors (8) (9). The same procedure can be observed also for five-digit decades, but, in this case, there is the disadvantage that entering at the III SG (group selectors) level means entering toward a group of only about 1,000 user lines (in other words, small capacity entering lines are made in a first phase). A similar criterium may also be adopted in networks with six and seven digits, but with an output at the III SG level and an input at the IV SG level. In fact, in these networks, an available decade can normally be found not at the second but at the third digit. In Italy, that occurs in the cities of Rome and Milan.

A study of the large local networks has been made by means of a simulation model prepared expressly for this purpose. The following input data may be varied in this model:

[a.] The number of existing exchanges and their capacity.

[b.] The number of new-technique lines under expansion for each exchange (also in new locations) and the routing plans.

[c.] The cost of transits under old and new technique, the cost of analog-digital converters and of junction lines.

The study indicated, among other things, how, for traffic from the old technique to the new, it is advisable to differentiate the direction by means of the old II SG instead of immediately requesting a new technique transit. For traffic from the new technique to the old, it has likewise been found advantageous to avoid an excessive subdivision of entering lines and, instead, to make a further transit under the new technique close to the destination exchange.

The results of the study have been verified, taking into account developments up to the year 2000 for two actual cases: the Brescia network and the decade 3 part of the Turin network.

3.2. Minor Local Networks

Networks with a three-digit district code and normally five-digit user numbering are taken up here. Six-digit user numbers can also be used, however.

Some of these networks have already reached saturations of five-digit numbering and six-digit developments are in progress or are being scheduled. For these kinds of networks, the most suitable methods of introduction are still the ones described for large networks.

In most cases, however, the field of numbering is far from saturation, in part also because of the small number of dependent rural networks. Consequently, one or two first digits are already available, or are easily made available.

In this case, it is preferable to differentiate the new technique right from the first digit. This procedure is made possible by the fact that there is normally one single exchange in small local networks. Therefore, it is not necessary to make a differentiation between various directions in the new-technique environment. Moreover, a smaller number of A/N converters is needed, both because there is greater accessibility in the output of the I SG and because, by entering under the old technique at the II SG level, breaking up of the entering lines is avoided.

3.3. Rural Areas

Traffic originated in rural exchanges does not adhere rigidly to the routing plans of direct control systems, since there already are units capable of a limited numbering analysis. Therefore, there is no problem in routing local traffic from the old technique to the new, right from the first switching stage, independently of numbering.

On the other hand, a special numbering problem comes up for calls intended for new technique rural exchanges and coming from existing old technique plants in the higher ranking transit center. The possible solutions are:

a.) To select, first, the destination rural area and then to differentiate between new and old technique with a subsequent digit.

b.) To differentiate, first, between new and old technique and then to select the destination rural area with one or more subsequent digits.

Solution a) is simpler, especially since it concerns modifications in the routing and charging analyzers. Nevertheless, a technical-economic evaluation has shown that, in most cases, the presence of PCM connections makes solution b) preferable, when the old exchanges are capable of meeting certain numbering requirements. In this solution (figure 4), traffic may be routed immediately toward the transit network (RT) and from the RT to the respective decentralized section (RTD). Thus, connections involve one single analog-digital converter, rather than three. It should also be noted that, if there is sufficient analysis capability in a present rural exchange, it is also advisable to route direct centripetal traffic toward the new technique through new technique circuits.

4. Other Services

4.1. General Aspects

An integrated network is capable, in principle, of furnishing users both supplementary telephone services and other services, like synchronous data (10).

Other services, like videophone and cable television, should be borne in mind when a new digital telecommunications network is designed. On the other hand, integration of these two services pertains primarily to transmission rather than to switching. Therefore and also in view of the special questions raised

by these services, it seems advisable to take up these topics not in this paper but, rather, at some other time.

It is generally known that systems with recorded program control can offer a vast series of supplementary telephone services, including, for example, shortened selection by pushbutton equipment.

Some of these services may be quite an absolute necessity for certain users, including, for example, written documentation of debit entries for direct dialing calls. It should be noted that this kind of service would also make it possible to offer an outward wide area telecommunication service* even in countries where debit entry by accounting pulses is used.

An integrated network can offer economically and technically suitable solutions for certain services, like, for example, the three-way conference service, for which a single device made with the time-division technique can handle several conference calls simultaneously. The quality of this service improves when all the users belong to an integrated network, because of the more favorable transmitting characteristics of digital means. Another of these services is the transfer of calls to another number. In this case, even if the call originates from an old analog network and rerouting cannot be accomplished, good quality is ensured when the transferring line and the receiving line belong to a digital network.

It should be observed that, if the destination user has a sufficient number of local lines of his own, the quality of the long distance network can be maintained up to the user's equipment by means of PCM transmission systems. The call transfer service enables a user to be called by normal users belonging to another network, without a long distance charge for the caller.

For the synchronous data service, the peripheral exchange has to make possible not only the connection of telephone user lines but also of data user lines, consisting of four-wire circuits in base band (11). Data users can have access to the exchange individually or through submultipliers. In the first case, the peripheral exchange has the task of concentrating data calls on the PCM channels used for telephony. Data calls, therefore, can be routed through the transit network toward the nearest exchange equipped for data processing. For submultiplied lines, the peripheral exchange only performs a semipermanent kind of switching. Either of these two solutions may be preferable for a specific user, depending on the speed of transmission of the specific traffic and the distances.

4.2. Remarks on Introduction

There may be several reasons for giving users requiring new supplementary telephone services priority access to the new system over subscribers to the

---

* A service in which debit entries for direct calls going out to specific numbers or number classes are on a flat-rate basis.

traditional type. In a large-sized area in which a new service is to be offered, it is obviously not necessary to wait until a new system unit is installed in all the exchanges. On the other hand, it is not advisable to offer a new service all over the territory when only one exchange of the new type has been installed. In this case, the commercial aspect and the economical operation of the service would be affected adversely by a need for adopting very long user lines, by problems of numbering with regard to codes and by problems of charging for both outgoing and incoming calls. Moreover, it does not seem to be advisable to offer a new service only in a limited number of areas scattered over the territory. A good compromise would be to install at least one peripheral exchange in each local network that has its own district code. Usually, these networks are sufficiently numerous and are in the country's largest urban areas. In Italy, for example, there are 231 of these networks (out of a total of about 2,000) and most of the subscribers belong to them. With regard to the remaining local networks, it seems acceptable, from the subscriber's point of view, for the new services not to be made available initially in rural areas. Nevertheless, when necessary, it is possible to overcome every difficulty by means of temporary long user lines.

It will be necessary to install more than one peripheral exchange in large, polycentric metropolitan networks. It will probably be advisable to install a new peripheral exchange for each of the old main exchanges, for the purpose of avoiding problems in the user network. In smaller networks, on the other hand, one single new peripheral exchange will be sufficient.

The location of transit networks and central controls will depend only on technical considerations concerning traffic, cost and reliability requirements.

By proceeding as shown above, the simultaneous, coordinated introduction of a flexible superimposed network is achieved. This network will make it possible to offer new services to users located anywhere in the nation's territory. It will evolve subsequently until all users are connected to it.

The same superimposed network can be used to offer data service switched over all the nation's territory. At least part of the connections have to be under digital technique for this purpose. This is possible by using suitable MODEM [modulator-demodulator], even in cases in which the transmitting carriers are exclusively of the analog type.

5. Conclusions

Many requirements came to light during this study that have to be met by a new digital system so that its introduction into a network will be favored. Some of these requirements are obvious, like low cost, modular structure, capability of decentralization, capacity for new services, and so on. Other requirements, although implicit, were not stressed particularly. They include, for example, the capability of making direct connections between the new peripheral exchanges and old-technique exchanges and the capability of generating adequate accounting pulses even for calls originating under the old technique.

Further requirements may emerge, for example, for more detailed studies on the decentralization of switchboards or on the replacement of thousands of traditional lines with 2,000-line peripheral exchanges, and so on.

In summary, it seems advisable to draw the following conclusions:

I. The adoption of digital switching systems, within the framework of integration of techniques and services, seems to be promising for both long distance and local networks.

II. Administrations may obtain substantial advantages from the adoption of appropriate introduction methods.

III. Manufacturers can facilitate the introduction of their systems into networks by making them capable of meeting certain specific requirements.

It is pointed out, as a final conclusion, that the objective of this paper was certainly not to make a complete list of those requirements. An attempt was made, rather, to emphasize how they can be disclosed only by means of a detailed study of introduction techniques.

BIBLIOGRAPHY

1. Gigli, A. "OCM Insertion in the Telephone Network," TELECOMUNICAZIONI, No 39, June 1971.

2. Ward, M. "A Digital Trunk Exchange in a Mixed Analogue, Digital Environment," Paper No 213, ISS, Monaco, September 1974.

3. McDonald, H. S. "An Experimental Digital Local System," Paper No 212, ISS, Monaco, September 1974.

4. Schoeff, J. A. "A Versatile Integrated Codec for PCM System," Paper No B4, International Seminar on Digital Communications, Zurich, March 1976.

5. Ferra, P. de, and Martinelli, S. "Basic Features of the Time Division Switching System PROTEO," Paper No 22 E, ICC [International Conference on Communications], San Francisco, June 1975.

6. Ritchie, A. E., and Smith, W. B. "System Planning for N. 4 ESS," Paper No 223, ISS, Monaco, September 1974.

7. Bernard, R.; Dejean, J. H.; and Robin, G. "Analytical Cost Studies of PCM-IST Networks," Paper No D2, International Seminar on Digital Communications, Zurich, March 1976.

8. Lucantonio, F. "Preparatory Study for the Introduction of the Electronic Technique in Switched Networks," L'ELETTROTECNICA, Vol 62, No 2, February 1975.

9. De Giovanni, A.; Segre, F; and Maggi, F. "Problems of Insertion of the PROTEO System in Networks," TELECOMUNICAZIONI, Nos 54-55, March June 1975.

10. Decina, M., and Ferra, P. de. "Prospects for Techniques and Services Integration into the Italian Telecommunication Network," Paper No 243, ISS, Monaco, September 1974.

11. Mossotto, C.; Musumeci, I.; and Pietromarchi, A. "Technical Requirements for Digital Data Switching in PCM Exchanges," to be presented in this symposium.

10,042
CSO: 5500

DEVELOPMENT OF THE PERIPHERAL EXCHANGE IN THE PROTEO SYSTEM

Milan TELECOMUNICAZIONI in Italian Nos 60-61 Sep-Dec 76 pp 21-34

[Article by Guido Arrigoni, Sergio Dal Monte and Giorgio Magnolfi, of SIT-Siemens, and G. Battista Di Stefano, of the SIP, originally presented to the International Switching Symposium, Kyoto, October 1976: "PROTEO System: Peripheral Exchange Field Trials"]

[Text] An integrated, completely electronic system, designed and built by SIT-Siemens, in collaboration with various companies in the STET Group with the technical assistance of SIP [Italian Telephone Operating Company], is in an advanced stage of development and testing, in Italy. This article gives a brief description of the PROTEO system in its general features and deals in particular with the functions of the peripheral exchange, the most repetitive unit in the system. A peripheral exchange has been in public operation since April 1975. The various testing phases, its placing in service and its operation since July 1973 are presented.

1. The PROTEO System

PROTEO is a modern integrated telecommunications system developed in the laboratories of the STET Group and, specifically, at SIT-Siemens (Milan), CSELT [Telecommunications Research and Study Center] (Turin) and SGS-ATES (Agrate) with the assistance of the SIP and built by SIT-Siemens.

Figure 1 shows a block diagram of the system in its three principal parts: peripheral exchange (CT), PCM [Pulse-Code Modulation] transit network (RT) and centralized control (CC). The main characteristics of the system are:

[a.] Completely electronic technique, based on time division (TDM [Time-Division Multiplex]).

[b.] Capability of complete decentralization of peripheral exchanges.

[c.] 30,000 lines subdivided in 32 CT, maximum. Each CT can serve up to 2,048 numbers.

4. PCM transmission between peripheral terminals and transit network.

5. Signaling on common channel.

6. Recorded program control.

7. Integrated data transmission.

8. New services for users.

9. Centralized structure for maintenance and operation.

The system accomplishes complete integration, both in technique (switching and transmission) and in services (voice, data, pictures).

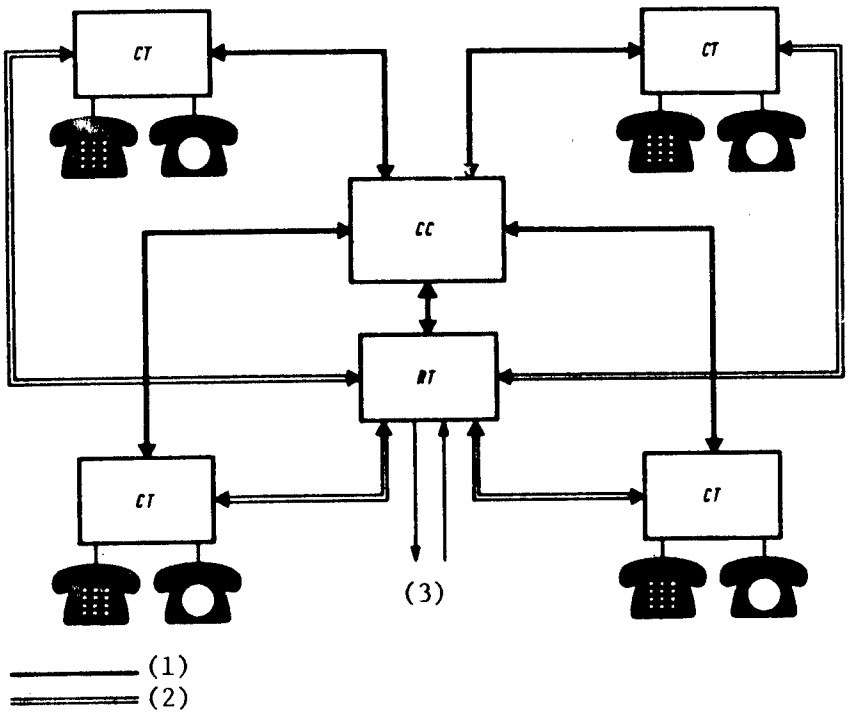

Figure 1. General diagram of the PROTEO system.
Key: 1. data lines; 2. PCM connections; 3. to the traditional network and to other PROTEO areas

1.1. The PROTEO Peripheral Exchange

The peripheral exchange (CT) is the unit to which all the users served by the system are connected. Each CT switches local traffic, while outside traffic is routed through PCM connections toward the transit network.

The CT, designed for low and medium traffic volume, has a capacity for 2,048 users and 180 connections, used for outside connections, with the possibility of handling 156 simultaneous conversations with a total accessibility network.

The CT can be decentralized with regard to CC and RT, offering great equipment flexibility and the possibility of optimizing the telephone network by means of equipment close to the user and a consequent reduction of line length.

The switching technique used in the PROTEO peripheral exchange is TDM/PAM [Time-Division Multiplex / Pulse-Amplitude Modulation] with resonant transfer.

Connections with the transit network are accomplished through 2 Mbit/second PCM channels, 30+2 channels (depending on the CCITT [International Telegraph and Telephone Consultative Committee] recommendations), while connections with the centralized control are accomplished by means of 64 kilobit/second channels.

1.2. The Transit Network and Central Control

The transit network is a time-division digital system capable of switching both 2,048 Mbit/second lines and 8,448 Mbit/second lines.

The transit network has been designed so that it will have no internal bl cks, in order to have maximum freedom in establishing connections and in serving different traffic distributions, both with the initial equipment and in case of expansions.

The central control is a recorded program system providing the following functions in the area of switching:

[a.] Switching: storage of labile data for each connection, routing, rate scale.

[b.] Optional services.

[c.] Centralization of operation and maintenance for the system: collection of alarms, cyclic checks, isolation of units out of order, diagnosis and location of modules out of order.

The central control consists of two computers operating in parallel in accordance with master-slave operation.

The CC is capable of controlling a transit network and up to 32 peripheral exchanges, for a total of 30,000 users with a capacity of 150,000 BHC.

1.3. Maintenance Areas in the PROTEO System

The PROTEO system is completely autonomous for performing voice and data services. A service processor takes care of implementing and providing maintenance and administration services.

The main functions of the service processor are:

[a.] Maintenance programs and diagnosis for definite location of breakdowns.

[b.] Signaling and collection of processed alarms.

[c.] Statistics on breakdown data.

[d.] Statistics on traffic data and other significant parameters.

[e.] Configuration and reconfiguration for the switching area.

[f.] Variation of the routing plan.

[g.] Rating and other administrative services.

2. The Peripheral Exchange

Studies for designing the PROTEO system were started in 1969 on the basis of the peripheral exchange, because it forms the most repetitive unit in the system.

The floor plan for a PROTEO switching center for 30,000 users (figure 2) shows the number of CT used. Design tests of this unit were especially interesting, because not only the technological problems pertaining to it were tackled and solved, but also problems of perfecting manufacturing methods suitable for a completely electronic telecommunications system. Then it must be noted that the peripheral exchange is the unit that performs integration of the switching and transmission methods and of the voice and data services.

The design of the peripheral exchange was also based on experience acquired in the production of two PABX [Private Automatic Branch Exchange] prototypes using the TDM-PAM technique. One of them is in actual operation at present as a private exchange in the business area of Castelletto.

The block diagram of the peripheral exchange is shown in figure 3. Users are connected to the connection network (RC) (dial and multifrequency pushbutton) and also PCM and low frequency connections.

The connection network is controlled by two cabled logic preprocessors (UCL) operating with time division. Their main functions are:

[a.] Interface between line signaling and signaling on a common channel (toward CC).

[b.] User and connection scanning.

[c.] Assignment and maintenance of connections.

[d.] Performance of tests on the connection network.

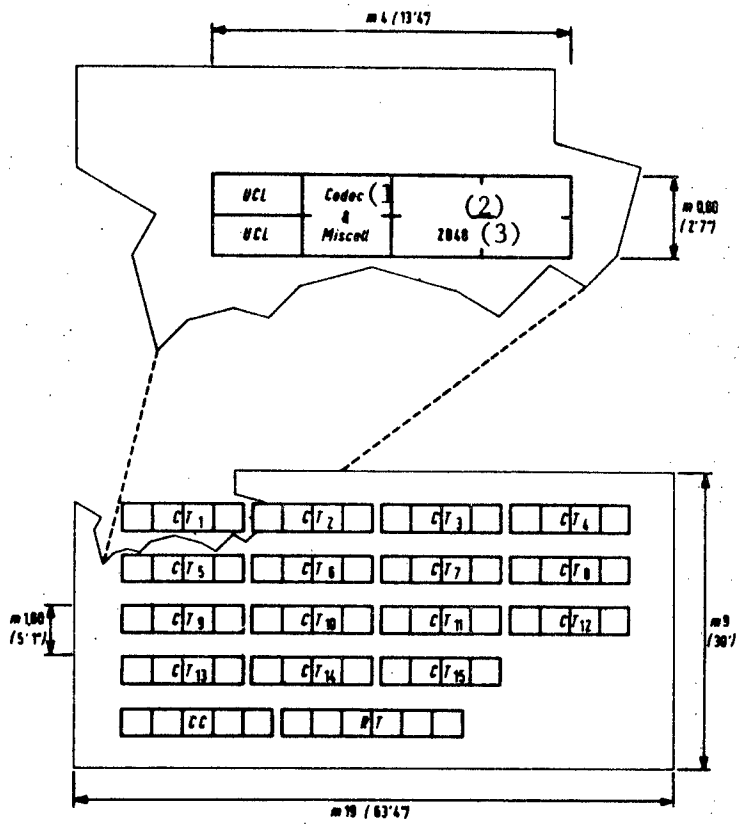

Figure 2. Typical floor plan of an exchange (30,000 users).
Key: 1. coder-decoder; 2 circuits; 3. users

Each UCL is connected independently to the CC by means of 4.8 kilobit/second MODEM [modulator-demodulator], with 20-bit messages and redundant code for correction up to two wrong bits and detection up to three bits.

Switching of the voice signal is accomplished with the resonant transfer method. Samples pertaining to a connection between two users are exchanged on a multiple called "sound highway." A sound highway is capable of handling 80 simultaneous connections subdivided in an equal number of time channels. Since the sampling frequency is 8 kilohertz (in accordance with international recommendations), the time interval available for each connection is 1.56 microsecond. The time actually used for resonant transfer is equal to 920 nanoseconds. The rest is used as cushion time. Figure 4 is a functional block diagram of the exchange. There are two main highways (HW), each controlled by a preprocessor (UCL). Each user group or connection can have access to one highway at a time.

Two of the 80 time intervals are used for scanning and control. Therefore, there are 78 intervals usable as connection routes for each highway.

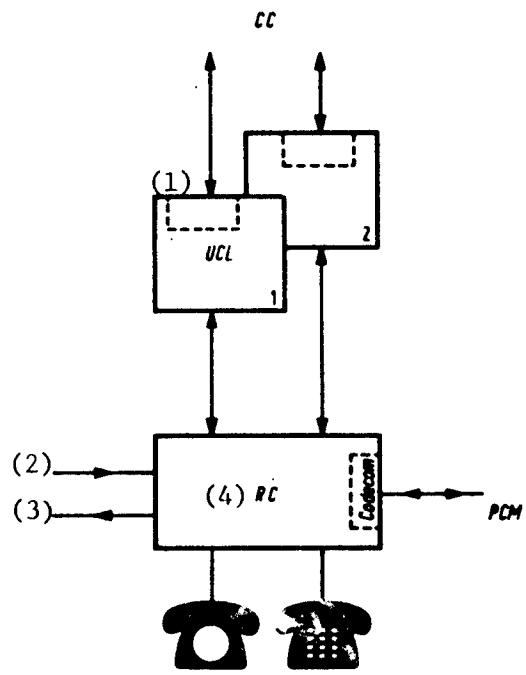

Figure 3. Block diagram of the peripheral exchange.
Key: 1. modulator-demodulator; 2. connection; 3. low frequency; 4. connection network

The various groups of units connected to the PAM highways are:

1.) User Groups (GU)

This consists of a group of circuit boards on which (figure 5) the components pertaining to the user control circuits are mounted. Four of these circuits are contained (with the accesses for controlling them) on a board 256 X 230 millimeters in size. The exchange is subdivided into eight user groups, each of which has a maximum of 256 jacks. Each user circuit contains a TDM filter, the power supply bridge, the ringing current supply, the line current and half current measuring head, the circuits for connection control, and so on.

Integrated MSI and LSI integrated circuits were developed by SGS-ATES for the routing and switching circuits. An extensive use of Schottky technology made it possible to obtain high operating speed and low dissipation at rest (a few milliwatts).

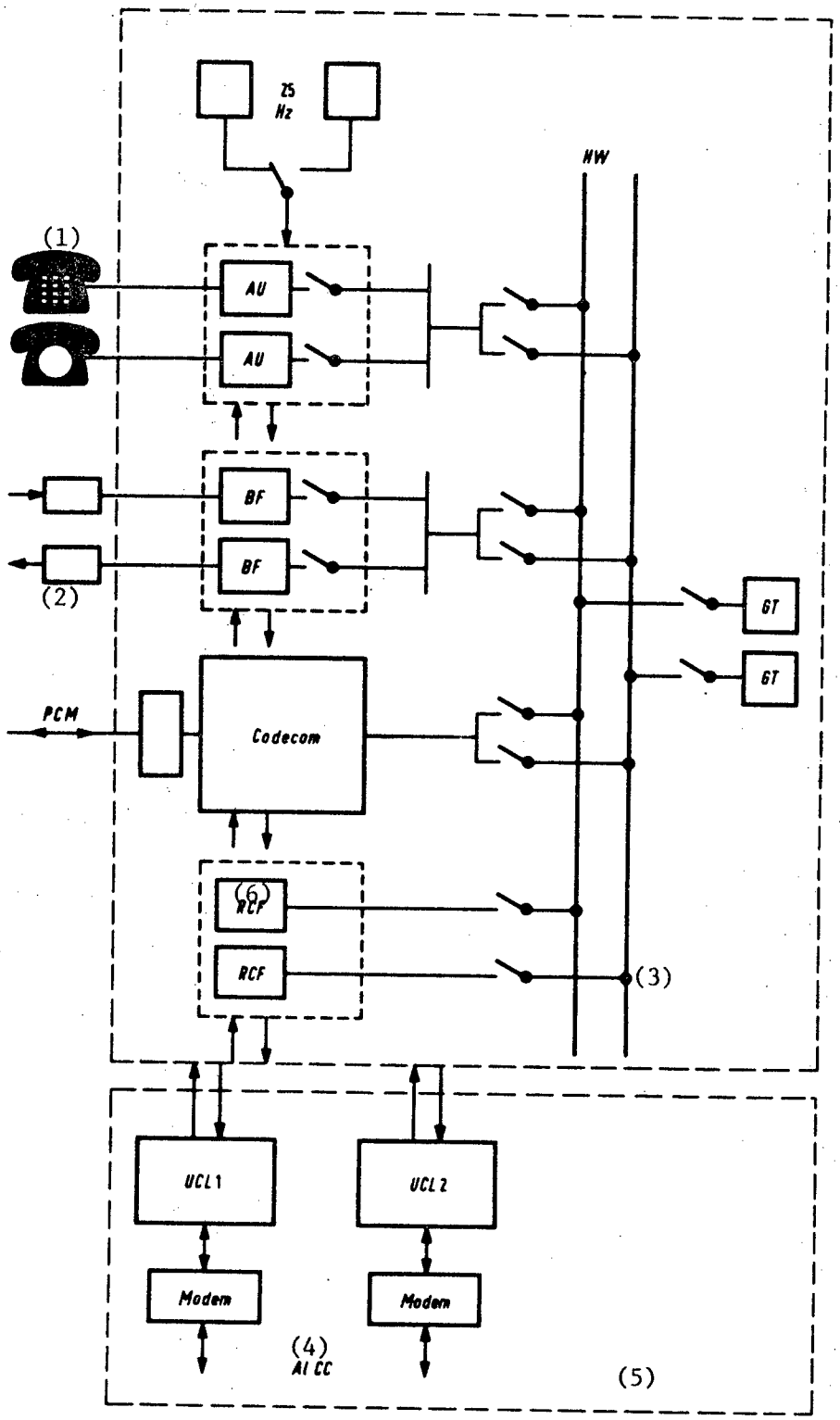

Figure 4. The peripheral exchange connection network.
Key: 1. users; 2. low-frequency connections; 3. connection network; 4. to the central control; 5. preprocessor; 6. digit receiver

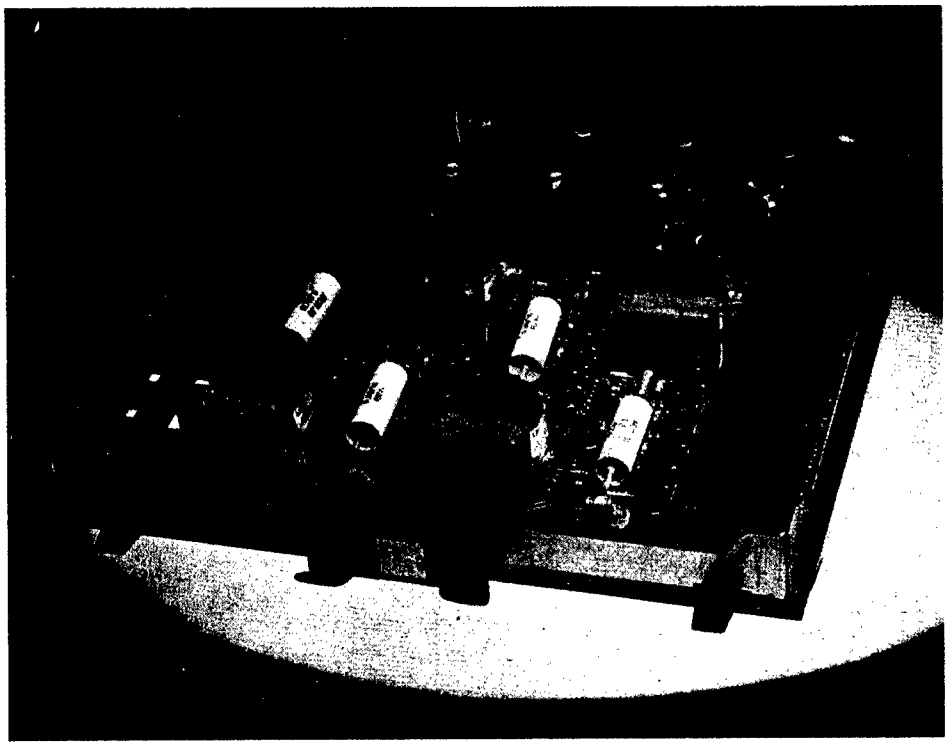

Figure 5. Circuit board with four user jacks.

2.) Connection Groups

There are 180 connections, divided in six groups of 30 each. A group may consist either of PCM connections, called CODECOM, or low-frequency (BF) connections used for connecting with electromechanical switchboards.

3.) Digit Receiver Groups (RCF)

They consist of circuits used to detect multifrequency user selection. Each group is duplicated for reasons of reliability.

4.) Tone Generators

These are the units that send the various tones used to the subscribers.

The main characteristics of the peripheral exchange are described in tables 1, 2 and 3. The PROTEO pheripheral exchange, constructed with the TDM method, uses all the exceptional capabilities offered by that method and by a recorder program control, to perform complete supervision of the exchange itself. The control operations are performed on UCL and RC using the TDM technique, while first-level diagnosis (location of the unit out of order and its isolation) uses the recorded program control capability. One or more time intervals (phases) are used to obtain cyclic control over the exchange, depending on the type of controls required, on the need for reconfiguration and on the traffic situation.

Table 1
Main Characteristics of the Peripheral Exchange

Capacity:	
Users	up to 2,048
Connections	up to 180
Connection routes	2 X 78
Traffic (1% loss)	137.5 E
Connection for:	
Dial telephones	
Pushbutton telephones	2 frequencies (1 out of 4) with key signal
Line characteristics:	
Supply voltage	-48 volts (CEI [Italian Electrical Engineering Commission] standards
Power supply bridge	2 X 510 Ω
Line resistance	1,400 Ω (pushbutton) 3,000 Ω (dial)
Line insulation	>20 kΩ
Immunity to over-voltages	500 volts (after the arresters)
(ISPT standards)	

Table 2
Sound Characteristics

Transmitted band	300-3,400 hertz
Internal transmission	PAM with resonant transfer 80 1.56-microsecond time intervals
User-user attenuation	<2 decibels
User-low frequency connection attenuation	<1.7 decibels
User-PCM-PCM-user attenuation	CCITT standards

Table 3
Mechanical Characterisitcs

Number of cabinets: 4	3 for RC 1 for UCL
Cabinet dimensions	1,030 X 830 X 2,850 millimeters
Weight	3,500 kilograms
Ambient temperature	≤40° C

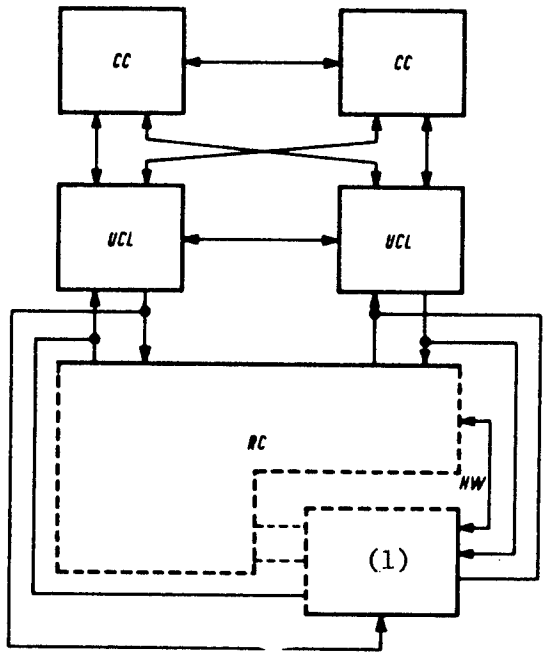

Figure 6: Testing unit.
Key: 1. testing unit

The block diagram of the monitoring organization is given in figure 6. The testing unit (GK) includes all the instruments used for supervisory controls (senders, receivers, analyzers) over RC and UCL and it has full access to each unit by means of a separate route. Figure 7 shows, as an example, the instruments used for supervisiong the user's connection and lines.

The results of these tests are sent to the central control for proper analysis. This control notifies the maintenance personnel in case of an alarm.

3. Field Trials of the Peripheral Exchange

A "decentralized control" (CD), capable of supervising one single peripheral exchange, was designed for the purpose of obtaining a valid field testing with the peripheral exchange without having a central control, which was developed only subsequently.

This development made it possible to ascertain both the capabilities of the exchange and the corresponding applicable software to be used subsequently in the central control.

This choice also offered the possibility of a gradual introduction of the system in rural areas with a slow development, in which an immediate installation of CC and RT may not be immediately economical.

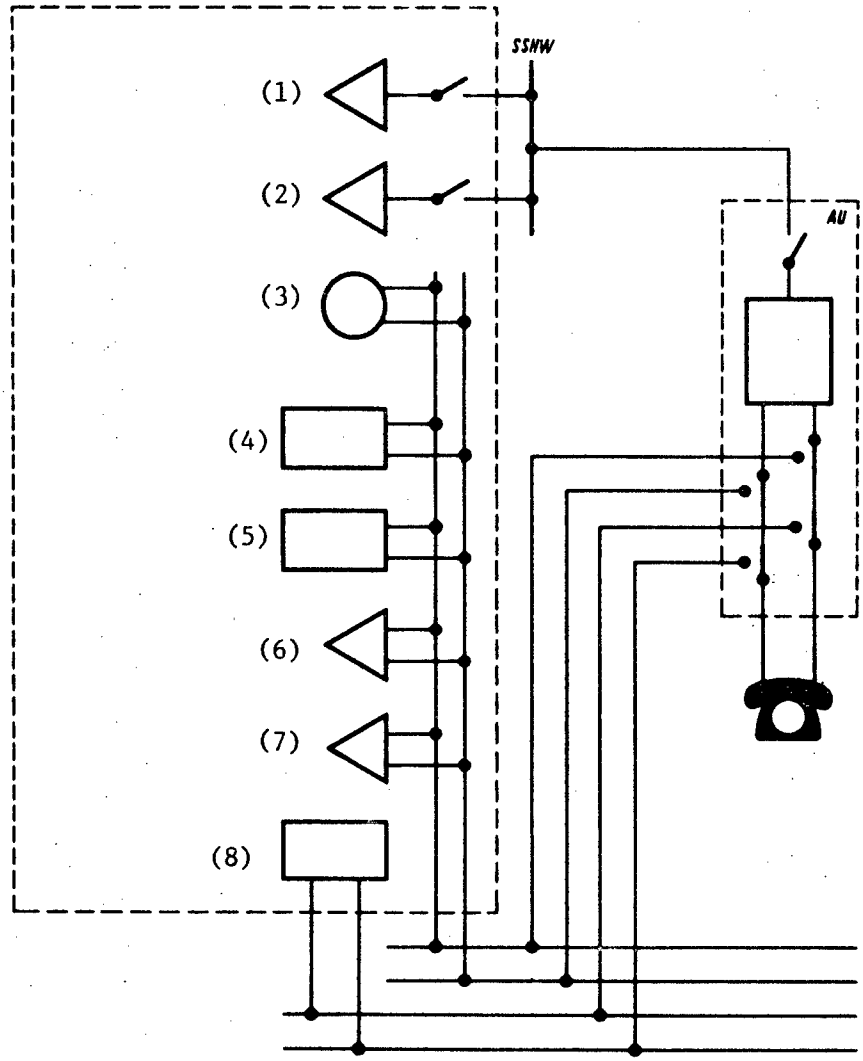

Figure 7. Supervisory control of the user's connection and line.
Key: 1. 3-kilohertz crosstalk receiver; 2. attenuation receiver; 3. 3-kilohertz generator; 4. user simulator; 5. decoder breakdown actuator; 6. high-frequency TX receiver; 7. ringing current receiver; 8. line test actuator

The prinicipal tasks of the decentralized control are summarized as follows:

[a.] Routing.

[b.] Rating.

[c.] Control cycles on the CT to detect breakdowns.

[d.] First-level diagnosis for isolation of units out of order.

[e.] Man-machine dialog.

[f.] Subscriber services.

The CD consists of a control unit (watch dog) and two computers operating with the master-slave system, supervised by the Watch Dog itself.

A data channel makes it possible to synchronize the software of both computers. In case of a breakdown in the master computer, the structure makes an exchange with the slave computer possible without causing any outside effect.

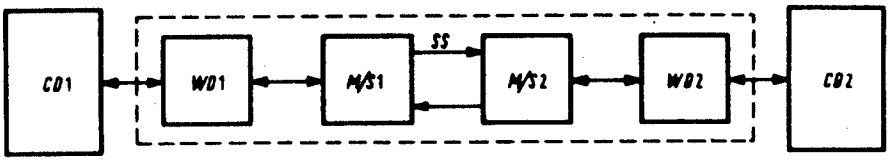

Figure 8. Decentralized control redundance structure.

Figure 8 shows the block diagram of the watch dog [WD] connection with the two computers, by means of the master-slave units.

The watch dog section determines the proper operation of the supervised computer and informs the M/S [master-slave] section.

The two M/S sections determine which computer is to be regarded as the master and they inform the periphery that it is ready to receive controls from one single master unit.

The watch dog and master-slave sections were designed to have excellent reliability and, at any rate, to ensure exclusion of a single computer.

The software in the 32,000-word memory handles control of the peripheral exchange in real time. It consists of a supervision program, which coordinates the intervention of applicable programs handling switching, supervision, reconfiguration, dialog with the operator and documentation. Figure 9 shows the block diagram of the system developed for field trials.

The following units are indicated, in addition to the decentralized control (CD), the UCL and the RC:

[a.] A service processor for tracing connections and for experimental tests.

[b.] Connection with a computer center for transferring data, available on punched tape in the CD, in tables and charts required by operating procedures, for maintenance, traffic statistics and administrative support.

[c.] Peripheral units near the control and the exchange to inform remote maintenance personnel.

[d.] A traffic simulation system (MAV).

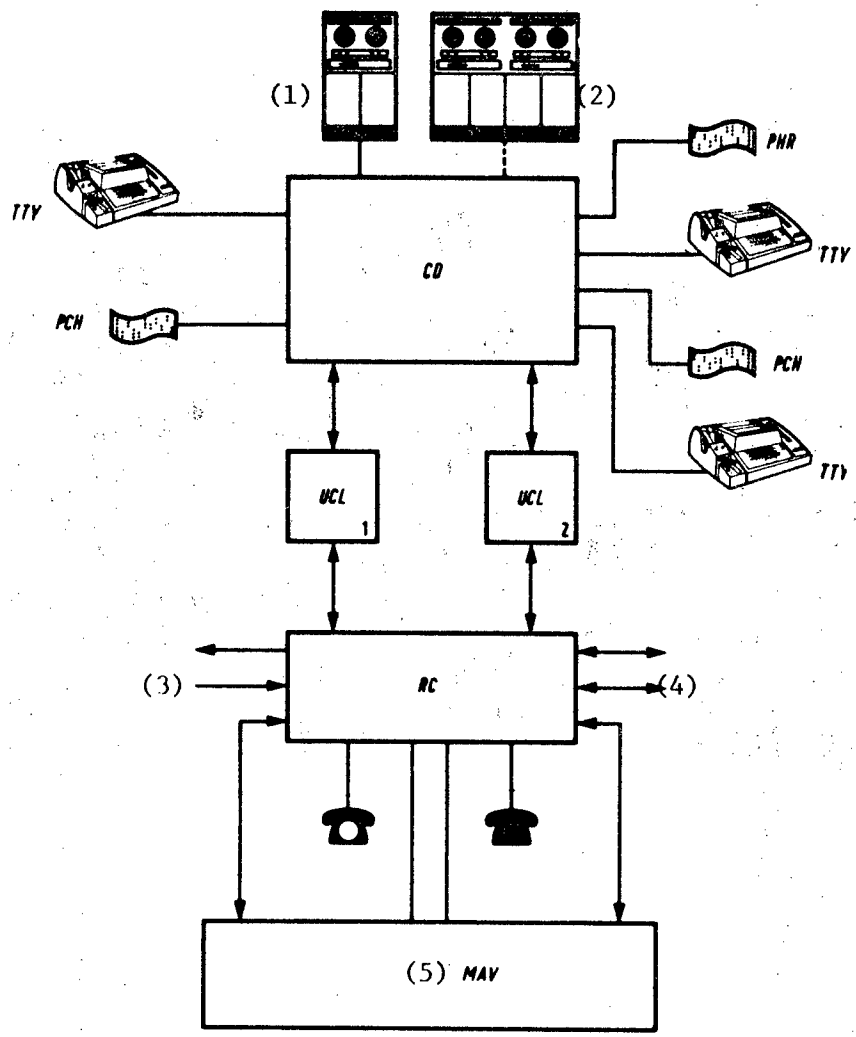

Figure 9. Organization of the field trial.
Key: 1. service processor; 2. data-processing center; 3. low-frequency connections; 4. PCM connections; 5. MAV simulator

Tests of the exchange, started in 1972 in the SIT-Siemens laboratories, were conducted with special attention to the operational and environmental aspects.

Experiments that continued until July 1973 in the company's laboratories verified the predicted operation limitations (temperature, power supply variations, and so on).

In July 1973, the exchange was installed at Settimo Milanese (Milan) and field trials were started immediately in collaboration with the SIP.

This location offered the advantage of introducing the PROTEO exchange as an exchange for peripheral traffic in the polycentric network of Milan, giving an opportunity to tackle problems connected to interfacing with various traditional methods.

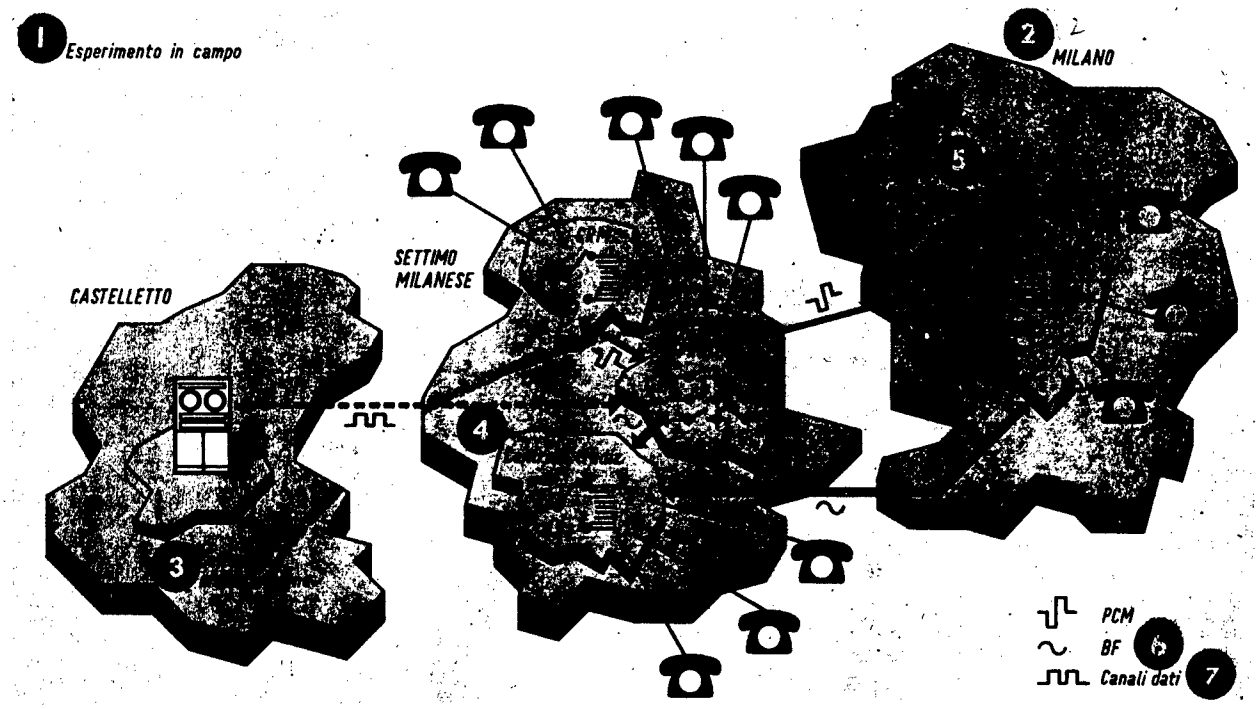

Figure 10. Introduction of the peripheral exchange in the Settimo Milanese network.
Key: 1. field trial; 2. Milan; 3. maintenance center; 4. traditional exchange; 5. center; 6. low frequency; 7. data channels

Figure 10 shows the configuration of the trial. The PROTEO exchange is connected as follows:

[a.] By means of two PCM systems with the main exchange in Milan Center.

[b.] By means of two 15-connection low-frequency lines with the Settimo Milanese step-by-step exchange.

[c.] By means of a PCM system with a rural subexchange (CRM).

The PROTEO CT is controlled by the CD about 4 kilometers away, located near the Castelletto laboratories, to make a thorough test of the problems of operation and maintenance raised by an unsupervised decentralized exchange.

The phases of the trial are subdivided as follows:

[a.] Until November 1973, checking the switching services.

[b.] Until May 1974, completion of services of supervision and diagnosis.

[c.] Until August 1974, completion of services for survival of the system in case of breakdown.

The tests were conducted by using artifical traffic (generated automatically within the system, like test calls, and so on), simulated traffic (generated by outside devices, like the MAV block devices) and "real" traffic generated by subscriber "friends." From September to December 1974, the SIP conducted the following acceptance trials:

1.) General Tests on the Switching Services. The tests covered all possible types of connection, simulating the correct and incorrect user behavior (with various kinds of telephones) and of connections, for each of the signaling codes provided. Over 300 tests of this nature were performed.

2.) Load Tests. Two types of tests were conducted:

[a.] Tests to ascertain if the exchange is capable of handling normal traffic.

[b.] Tests to determine the reaction of the system to conditions of overload (for example, with 400 simultaneous call attempts. It was ascertained that the delay in handling the calls was within predicted limits).

3.) Tests of Exchange Services under limiting conditions created by the user and connection network (for example, resistance limit of wire insulation, heat overload due to the entire subscriber network in short circuit, various conditions of impedence of the subscriber and connection network, immunity to lightning, and so on).

4.) Tests Concerning Transmission Characteristics. The main results of the measurements are given in table 4.

5.) Tests of the Exchange's Capability of Recognizing and Isolating Breakdowns. Over 3,000 breakdowns were caused artificially in the subsystems of which the exchange consists.

For each breakdown induced, both the types of circuits detecting it and the time of restoring the breakdown itself and specification of its location were recorded.

The principal results obtained were as follows:

[a.] Recognition of 98 percent of the breakdowns.

[b.] Time for restoration: on the order of about 10 milliseconds for malfunctions in the subsystems; on the order of minutes for decentralized units (individual connections); on the order of about 10 minutes for subscriber jacks (testing of a user's jack and the pertinent line takes about 2 seconds).

[c.] Diagnostic selectivity: for user jacks (60 percent of the volume of the exchange) 100 percent on a circuit board; for other circuits of the RC, 90 percent on two circuit boards; preprocessor (UCL), 75 percent on 3 circuit boards.

Table 4
Main Results of Measurements

		Connection	
		First type	Second type
Insertion attenuation	dB	2	2
Group delay distortion		see note	see note
Reflection attenuation	dB	>15	>12
Symmetry	dB	>55	>50
Psophometric noise	dBm0p	-73	-72
Noise on a single frequency	dBm0p	-73	-73
Extraband attenuation	dB	>50	>50
Caused by intermodulation	dB	>75	>50
Total distortion		--	see note
Spurious signals on output band	dB	--	>47
Gain variation with input signal level		--	see note
Crosstalk attenuation	dB	>74	see note

First type: PAM connections
Second type: PAM-PCM-PAM connections
Note: within the limits of Recommendation G-712 of the CCITT

The period between August 1974 and March 1975 was used to organize transition from a test and development phase, based on the work of groups of designers in close contact with SIP experts, to an operation and maintenance phase conducted by SIP operating personnel.

The operating organization was structured on two levels:

[a.] A first-intervention level capable of easily deriving, from alarms detailed on a printout, the units out of order to be replaced and capable of handling the simple operations of operation data collection.

[b.] A second specialized level capable of solving more complicated problems and of performing special tests.

This group has full access to all the laboratory data. In addition, monthly meetings were held between this group and a group of designers to discuss results from the field and to formulate strategies for tackling problems coming up from time to time.

Units out of order are always sent to a repair center where they are examined by reliability experts. During this period, the capacity of the exchange reached the following size:

Users:	500, including
normal	50 percent
pay stations	7 percent
private equipment	23 percent
"friend" users	10 percent
test jacks	10 percent (automatic ringers, and so on)

Connections: 180, divided into:

60 PCM connections toward Milan Center
30 low-frequency connections toward Settimo Milanese
30 PCM connections toward a rural exchange
60 low-frequency connections for testing

A program was also developed in this period for varying the numbering of the exchange, since that kind of variation was anticipated shortly.

4. Public Service of the PROTEO Peripheral Exchange

The exchange, which began public service in April 1975, was unmanned, while supervision took place during working hours in the control station.

In the remaining unsupervised period, alarms were transmitted to the manned exchange in Milan Center.

In the first year of operation, 15 breakdowns in the subsystems were recorded, as follows:

3 recordings of breakdowns in the PCM system toward Milan, owing to interconnection problems.

2 stops of one single computer (with automatic restart, without affecting service) due to transients on the primary power distribution. The distribution structure was varied to eliminate these disadvantages.

3 software errors recorded without total shutdown. The proper corrections were made together with the incorporation of new services required by maintenance.

3 shutdowns (including one total) with automatic restart owing to operator errors. These possibilities were eliminated by protecting the system against operator errors with keys and further controls depending on requirements.

4 breakdowns on a UCL owing to breakdowns of separate components, with no shutdown of the system and resulting in an average loss of 50 percent of the conversations in process of being set up.

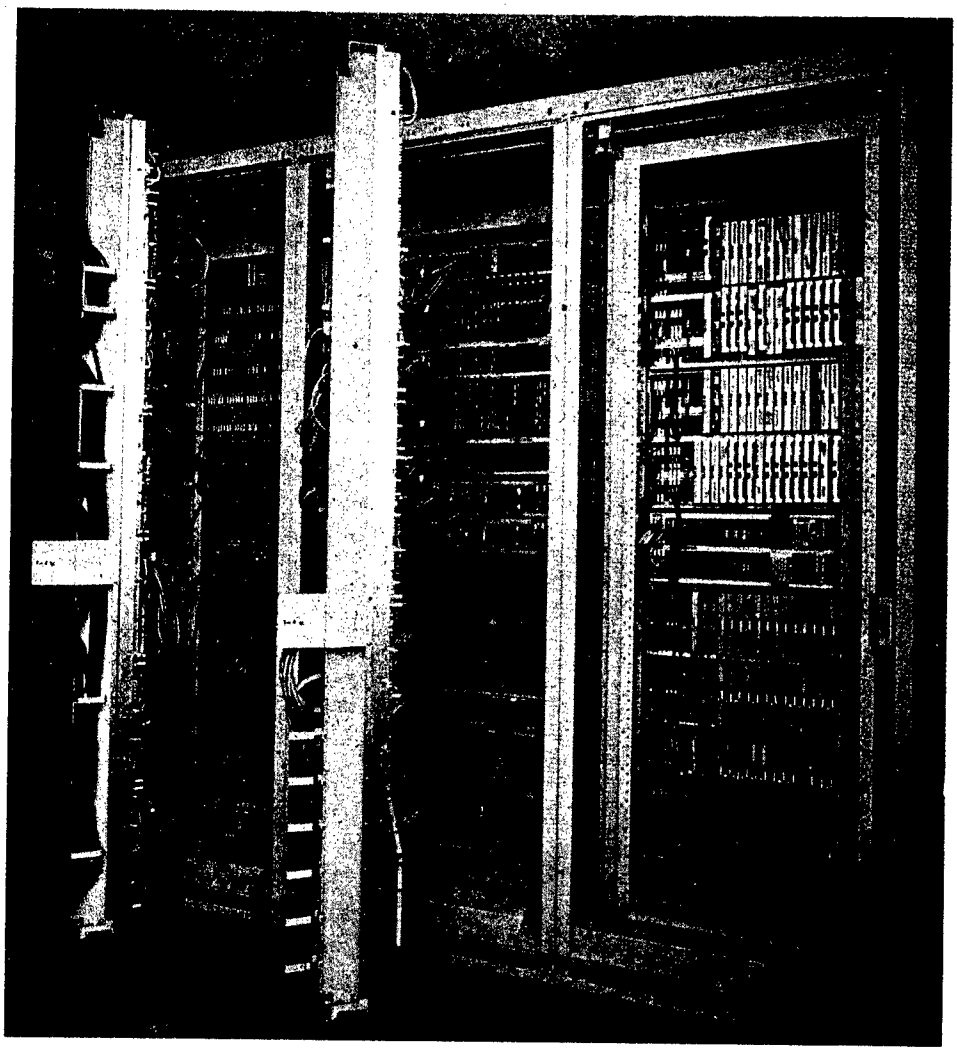

The PROTEO exchange in Settimo Milanese.

Malfunctions on the units of the exchange are shown in figure 11 and in table 5. Most of the breakdowns were recorded in circuits of the connection network and especially in subscriber jacks (making up 60 percent of the exchange).

It should be noted, however, that the second version of the user jack constructed with custom integrated circuits by SGS-ATES (in place of the separate circuits provided in the first versions) reduced the breakdown rate to 25 percent of the former rate.

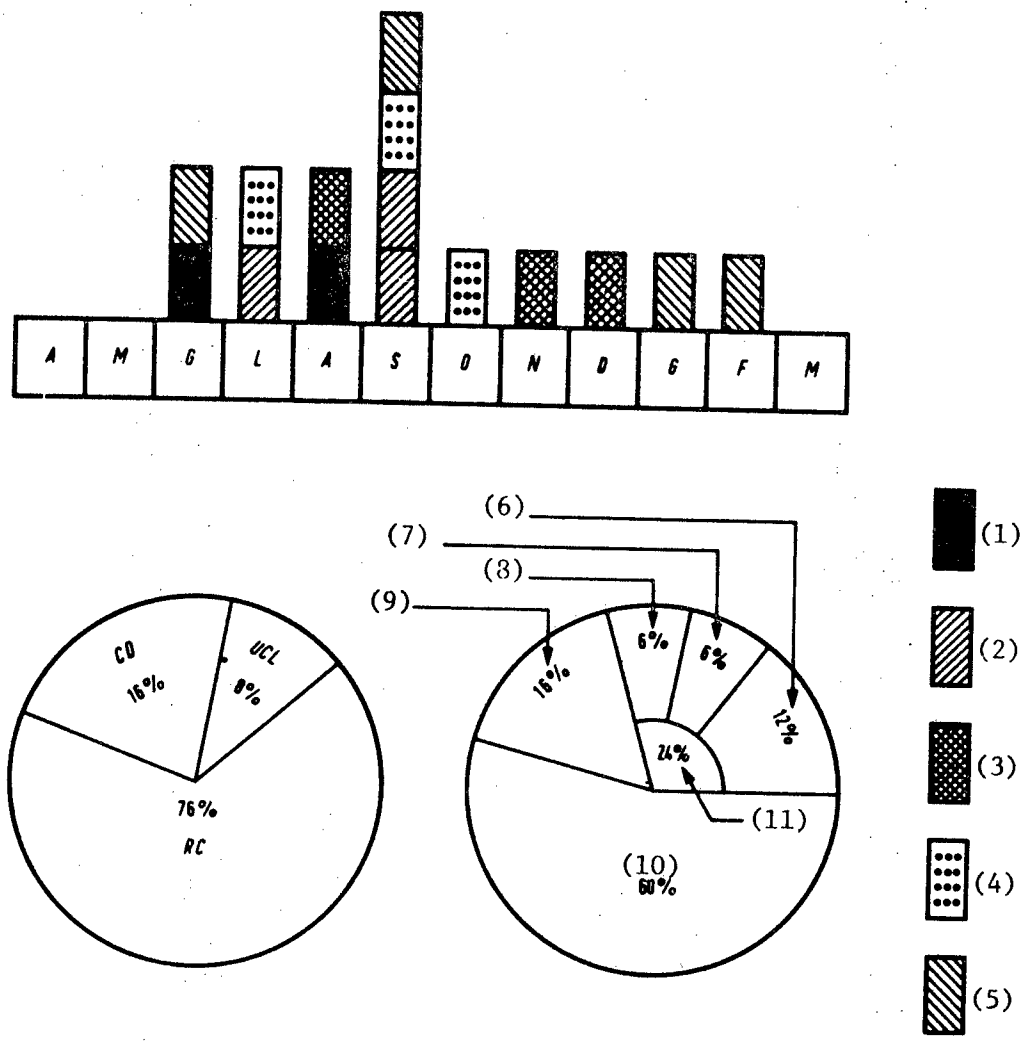

Figure 11. Distribution of breakdowns in the units of the exchange.
Key: 1. CD supply; 2. PCM breakdowns; 3. software errors; 4. operator interventions; 5. UCL breakdowns; 6. restarted by operator; 7. not recorded; 8. automatic restarts; 9. repairs; 10. replacements; 11. other

The distribution of repair time is described in figure 12. It should be noted that no subscriber complaint was recorded during the entire period of operation, owing to the speed and accuracy of locating breakdowns.

Preventive maintenance on user lines, by means of automatic cyclic tests, gave particularly good results.

Table 5
[Malfunctions]

Unit	Number of interventions			
	total	replacements	repairs	others
Subscriber group	29	28	1	--
Low-frequency connection group	1	1	--	--
PCM connection group	4	--	1	3
Timer	--	--	--	--
25-hertz generator	1	--	1	--
Medium-frequence digit receiver group	--	--	--	--
Test unit	1	--	1	--
UCL	4	--	4	--
CD	8	--	--	8
Total	48	29	8	11

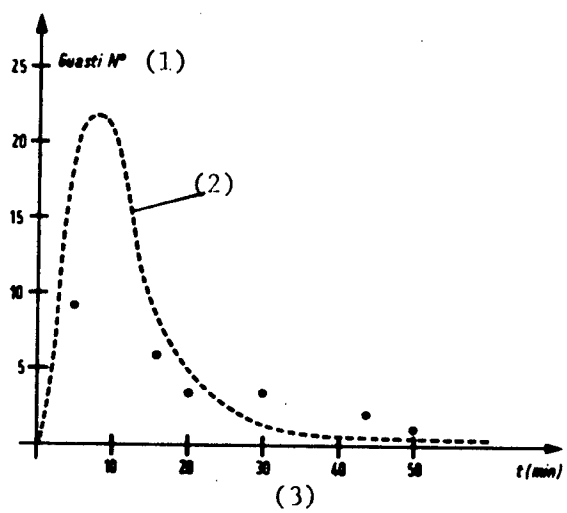

Figure 12. Repair time distribution.
Key: 1. number of breakdowns; 2. normal log distribution; 3. repair time

An automatic control cycle, lasting 30 seconds, consisted of tests on the following units:

user and line circuit boards (4 jacks)	(35 tests each)
2 connection groups	(20 tests each)
1 medium-frequency digit receiver	(15 tests each)
1 tone generator	(4 tests each)
1 UCL switching program section	

4.1. Modifications Made to the Hardware

Four circuits were modified, in order to improve the solving of breakdowns and two modifications, in order to correct errors in the UCL operating programs. Some modifications were also made in the user line testing circuits, in order to take into account the diversity existing in telephones and present user lines.

4.2. Modifications Made to the Software

Twenty-two software modifications were made (to correct errors and for variations). These modifications, tested on a simulated system, were made during operation, first making them on the slave CD and then switching to the master.

Variation in Exchange Numbering

As has already been pointed out, during operation, the Settimo Milanese exchange changed the numbering plan completely.

The problem was solved by using a suitable program based on two memory areas reserved for routing.

The first area contains present routing; the second, subsequent routing. At a predetermined time, the areas were exchanged, in order to achieve the desired new routing.

The same method was used to change the form of connecting new connection lines.

4.3. System Reliability

From an examination of the breakdowns recorded, it appears that a certain number of them are due to two main reasons:

[a.] Design errors (software errors, incorrect sizing and use of components, and so on).

[b.] Technology not completely suitable for certain parts (first version of the subscriber board, solder method for container wiring).

The other breakdowns recorded, on the other hand, are to be regarded as due to the normal life of the components.

If only this last-mentioned type of breakdown is taken into account, bearing in mind the limit imposed by the short observation period and the small number of specimens, it can be stated that the reliability predictions that had been calculated were generally confirmed by the experimental results.

5. Conclusions

At this time, both the centralized control and the PROTEO transit network are undergoing final trials.

A pilot series of the peripheral exchange is under production and acceptance trials. The wiring method adopted is a modified wire wrap connection and the entire mechnical structure has been revised, in order to adjust it to the requirements of production.

During 1977, some of these exchanges will be installed in the field. The organization built for Settimo Milanese is being expanded rapidly for an adequate solution to the problems raised by thak kind of wide-spread installation of integrated electronic systems. A team of experts has been organized in a centralized headquarters to analyze the data coming from the field.

This group will act as an interface between the operating agency, the manufacturer and the designers with regard to collecting and analyzing data. A second group will assist the operating agency whenever necessary to perform research on special breakdowns or to make modifications to the system. A third centralized group has been provided for handling maintenance of the software and documentation of the installed systems. A center has been set up to handle repairs and to administer stores of broken-down parts coming from the installed systems.

In addition, this center is responsible for analyzing breakdowns and for furnishing data useful for restoring reliability.

A group specializing in planning system documentation and operator manuals has been set up. In fact, it has been ascertained that inadequate information or imprecise directions to the operators are the most frequent causes of dangerous actions.

Experience achieved in the field demonstrates the interesting possibilities offered by this electronic system for both corrective and preventive maintenance.

The total repair time ascertained enables us to anticipate low maintenance costs without sacrificing service quality.

The companies in the STET group are making a great effort to offer, shortly, a technologically advanced telecommunications system consistent with international guidelines.

Considerable experience will be acquired from the many systems already installed in the field, before entering the mass production phase.

BIBLIOGRAPHY

1. Ferra, P. de, and Martinelli, S. "Basic Features of the Time Division Switching System PROTEO," International Conference on Communications, San Francisco, June 1975.

2. Lucantonio, F. "Preliminaries to the Introduction of Electronically Switched Networks," REVUE FITCE, No 6, 1975.

3. Valbonesi, G., Formenti, F., Musumechi, L., Bovo, A. "PROTEO System: Transit Network and Central Control," TELECOMUNICAZIONI, 1975, 54.

4. ITALTEL. "PROTEO," special issue, No 359-1-E01, Dec 1975.

5. Carrelli, C., Galimberti, R., Rosci, G., Taroni, P. "The Production of Software for the PROTEO System," Software Engineering for Telecommunication Seitching Systems, Salzburg, Feb 1976.

6. Husu, E., Martucci, R., Rosci, G., "PROTEO System: Managing the Manufacture of Software," AICA [International Association for Analog Computing] Congress, Genoa, Italy, 1975.

7. Alleva, I., Corti, M.G., Galimberti, R., Pescarolo, F. "A Simulation System for Implmentation and Evaluation of Diagnostic Programs of a Special Processor," 12th Design Automation Conference, Boston, June 1975.

8. Arrigoni, G., Di Stefano, G.B., Dal Monte, S., Magnolfi, G. "PROTEO System: Field Experience of PROTEO Peripheral Exchange," ISS, 1976.

10,042
CSO: 5500

NORDSAT ADVANTAGES EXPLAINED

Oslo ARBEIDERBLADET in Norwegian 2 Nov 77 p 15

[Commentary by Carsten Middelthon: "The Dangerous Satellite"]

[Text] Reason has spoken, cautiously and quietly. Certainly we should not expect too much, but the administration of the Norwegian Broadcasting Corporation (NRK) has taken a short step. Not with open eyes; that would be too much to expect from a responsible institution, they just glanced so far and glimpsed the light. And light has an annoying characteristic: it is inclined to blind one. So a person who thinks he is clever and cautious squints, heeding all sides, and that brings us to the point: Norway is not, after all, to say "no" to satellites, not an absolute "no." Rather, we may go forward in stages, as they put it. As if we ever did anything else?

So, it is a kind of "yes," then. And just to a little slice of satellite, nothing more. Preferably one just to hang on the wall as a trophy. Since no one knows what the good people can tolerate. Those sitting in the leadership of NRK are sitting there to watch out!

It is, after all, only half a year since the howls of outrage rose to the heavens from almost the entire Norwegian press, with cries in unison from writers and actors, preachers and politicians. A howl which culminated in something close to a kind of doomsday prophecy when Prime Minister Nordli went so far as to say that perhaps we had nothing to fear. That would be the end of good old Norway which had steadfastly and valiantly tried to prevent so much, including the introduction of something as evil as television, not to speak of color television, or stereo radio transmissions. Luckily, reaction says, we still have only one radio program and one television channel, which are destructive and dangerous enough to the salvation of the people. But is there still hope?

Unfortunately, I do not think so. Developments are proceeding at quite a rate, measured against Norwegian circumstances. And before NRK knows what is happening, we will have Nordic broadcasts, we will have satellites with direct link-ups to our own small antennas, which do not have to be

frighteningly expensive. And even if it is written on paper that a Nordic satellite will have its coverage area limited on the map, it is, remarkably enough, not the map which decides.

Technical developments will proceed, now as before, whether the Norwegian press likes it or not. Quite soon, or let us say comparatively soon, we will be able to receive broadcasts via satellites outside the Nordic region, too. Even if there are no plans for this. In a television series with Jan P. Jansen, we heard the heads of Nordic broadcasting express their Nordic desires and they were, taken overall, restrictive, with the partial exception of the Danish one. This, too, is as expected, but it is no less depressing.

While our Scandinavian home is clothed in deep November, we can all see the winter darkness approaching. Darkness created for those who want to listen, perhaps because the radio waves wished it to be so. From higher spheres they are reflected down when daylight is gone, and while we are girding ourselves for our daily routine early one morning we can catch the liveliest music. From those dangerous foreign countries, where at least at that time of the day they understand that we want something else besides pop. Quite the contrary. They enliven the day's rhythm with fresh little scherzos from the music of the Renaissance and the Baroque. An inexhaustible source of happiness and well-being, which NRK should also dip into.

It is particularly Belgian and Dutch morning broadcasts which allow us to shake off the soulless commercial, machine-produced pop which is otherwise force-fed to us day in, day out, from NRK. How would it be if current-affairs programs like "Echo" and "The end of the school day" got in touch with NRK's outstanding music department, which, as far as I know, has less and less to do with the selection of the total quantity of sound which is broadcast? It is far from impossible that the many capable program producers could be provided with fruitful new musical ideas.

And in this we can use the satellite too, it can bring us more music. With pictures, they need no help, the orchestral broadcasts on television are now done so capably that most objections vanish. And with its fine adventurous Sunday matinees, television, throwing aside all caution, is catering to our highest expectations. Most recently it was Rossini's "Italian in Algiers," a comic opera which we in this country did not have the least chance of seeing, except right there on television. Under relaxed, artistic, indeed almost freely balancing direction which did justice to bold, often facile music which would completely lose its character if it were to be presented outside the theatre.

Rossini and other Italians have so much more than we ever find anywhere else, and they can only be played by Italians. This time in collaboration with East German television in Dresden, which last time let us experience

Handel's opera "Xerxes," is an equally fabulous production. And next Sunday it will be Puccini's grotesque one-act "Gianni Schicchi."

Can the positive opportunities latent in several television channels not be seen, or at least slowly listened to? True enough, weak souls will select the programmes which attract them most. We should permit ourselves that thought, and that too is healthy. For people, i.e., television viewers, to be allowed to do as they wish?

Take the Handel matineee, for example. Probably there were thousands in this country who sat by their televisions that Sunday morning and who would like to have more. Handel wrote an immense number of operas which have not been performed for 200 years. European television can breathe life into them and we can have a chance to experience them. Plus all the other scenic musical works from the 17th and 18 centuries, there are thousands of them. Originally composed for the small elites of the princely court theatres, today they can be revived to make us all happy, actors and musicians, singers and stage-setters, technicians and theatre artists. And a world public numbering in the millions, which would also like to include recalcitrant little Norway.

8739
CSO: 5500

EDITORIAL APPLAUDS NRK DECISIONS ON NORDSAT

Oslo AFTENPOSTEN in Norwegian 7 Nov 77 p 2

[Unsigned editorial: "Nordic Television"]

[Text] Are we to have satellite television in Norway? Lars Korvald, Chairman of the Christian People's Party, has doubts about the Norwegian Broadcasting Corporation's agreement to Norwegian participation in trial broadcasts on a Nordic level. He is in doubt as to whether the elected representatives of the people really want Nordic television in Norwegian homes, and if the representatives do not want it, there is no need for test broadcasts, Korvald concludes.

In itself it would be all right if Norway could make a sovereign decision as to whether satellite television broadcasts should be received in Norwegian homes. But to say that this cultural offering will not take place if our elected representatives say no, is a pure over-simplification of the actual situation. A "no" from Korvald will not stop the television signals from passing through the air to the thousands of antenna units and receivers which can be simply installed. And if there should be no Norwegian prohibition, we can be sure that in the future there will be no lack of opportunities to look at other countries' television programs on one's own receiver.

One can lament the arrival of this opportunity within the foreseeable future, but it cannot be overlooked. In years to come, it is highly probably that television programs will come from various countries, specifically directed to "uncovered" television markets. The question will be whether the Nordic countries will see themselves in a position to meet the demands of a worldwide television society in time, whether they will participate through a Nordic program offering which, we are fully convinced, will be able to compete with most of what is offered, including more commercially orientated types of programs.

Nordic satellite television will naturally require fundamental consideration of program policy. But a joint Nordic project would be no hindrance to the development of a national media policy. We think it is strange that the

Norwegian Press Association--of all people--is negatively inclined toward trial broadcasts, and gives that as its principal reason.

On the contrary, the Nordic challenge and the national need must go hand in hand. A joint project would undoubtedly bring with it a far broader set of program offerings--not to mention the availability of parallel programs on different channels. We foresee that a Nordic agreement would not only cover access to boost and relay signals from neighboring countries. We foresee a developed system of program exchange, cooperation in productions, items which would give the greatest possible number of people a chance to use the television offerings at various times of day.

Fundamentally it is probably the point of departure which differs when one examines both Norwegian and Nordic television. For us, television is a medium with vast possibilities. For others the medium is a potential danger you must protect yourself against.

Today parts of Norway have access to a limited output of the future Nordic television. The committee of the Norwegian Broadcasting Corporation has adopted a sensible stand on possible further development. Agreement to trial broadcasts of satellite television must be the conclusion too, when Korvald and his colleagues in the bodies elected by the people have had a chance to evaluate future television coverage in the Nordic countries.

8739
CSO: 5500

BRIEFS

AZORES SATELLITE COMMUNICATIONS--A message from President Ramalho Eanes to the Azorian people will herald the introduction of a new Radiodifusao Portuguese program to the Azores via satellite on Sunday afternoon, when an earth satellite communications station is commissioned in the Azores, boosting telecommunications between mainland Portugal and the outlying nine-island archipelago in the Atlantic. Apart from being able to call each other through a subscriber trunk dialing system, the people of the Azores will, from Sunday, be able to receive better television and radio programs from the mainland. To mark the event, the Portuguese ANOP News Agency is opening a branch in Ponta Delgada. [Summary] [Lisbon Domestic Service in Portuguese 0900 GMT 15 Dec 77 LD]

CSO: 5500 END