AD-A277 137

REPORT DOCUMENTATION PAGE

Form Approved
OMB No. 0704-0188

Public reporting burden for this collection of information is estimated to average 1 hour per response, including the time for reviewing instructions, searching existing data sources, gathering and maintaining the data needed, and completing and reviewing the collection of information. Send comments regarding this burden estimate or any other aspect of this collection of information, including suggestions for reducing this burden, to Washington Headquarters Services, Directorate for Information Operations and Reports, 1215 Jefferson Davis Highway, Suite 1204, Arlington, VA 22202-4302, and to the Office of Management and Budget, Paperwork Reduction Project (0704-0188), Washington, DC 20503.

1. AGENCY USE ONLY (Leave blank)	2. REPORT DATE 31 March 92	3. REPORT TYPE AND DATES COVERED Final

4. TITLE AND SUBTITLE
Weapon Training Instrumentation

5. FUNDING NUMBERS
C N61339-92-C-0083

6. AUTHOR(S)
Fred C. Cordua
Steven Yun

7. PERFORMING ORGANIZATION NAME(S) AND ADDRESS(ES)
Schwartz Electro-Optics, Inc.
3404 N. Orange Blossom Trail
Orlando, FL 32804

8. PERFORMING ORGANIZATION REPORT NUMBER
W1573

9. SPONSORING/MONITORING AGENCY NAME(S) AND ADDRESS(ES)
Naval Training Systems Center
12350 Research Parkway
Orlando, FL 32826-3224

10. SPONSORING/MONITORING AGENCY REPORT NUMBER

DTIC
ELECTE
MAR 18 1994
S B D

11. SUPPLEMENTARY NOTES

12a. DISTRIBUTION/AVAILABILITY STATEMENT

12b. DISTRIBUTION CODE

13. ABSTRACT (Maximum 200 words)

The Weapon Training Instrumentation report addresses the use of video to record the spatial orientation of a weapon at the time of fire. Such information is avaiable for real time observation and is recorded for post exercise critique. The report contains implementation ideas, tests and results, and recommendations for system improvement.

DISTRIBUTION STATEMENT A
Approved for public release;
Distribution Unlimited

14. SUBJECT TERMS
Video Weapons

15. NUMBER OF PAGES
26

16. PRICE CODE

17. SECURITY CLASSIFICATION OF REPORT	18. SECURITY CLASSIFICATION OF THIS PAGE	19. SECURITY CLASSIFICATION OF ABSTRACT	20. LIMITATION OF ABSTRACT
Unclassified			

NSN 7540-01-280-5500

Standard Form 298 (Rev. 2-89)
Prescribed by ANSI Std. Z39-18
298-102

94-08564

94 3 16 100

GENERAL INSTRUCTIONS FOR COMPLETING SF 298

The Report Documentation Page (RDP) is used in announcing and cataloging reports. It is important that this information be consistent with the rest of the report, particularly the cover and title page. Instructions for filling in each block of the form follow. It is important to *stay within the lines* to meet *optical scanning requirements*.

Block 1. Agency Use Only *(Leave blank)*.

Block 2. Report Date. Full publication date including day, month, and year, if available (e.g. 1 Jan 88). Must at least the year.

Block 3. Type of Report and Dates Covered. State whether report is interim, final, etc. If applicable, enter inclusive report dates (e.g. 10 Jun 87 - 30 Jun 88).

Block 4. Title and Subtitle. A title is taken from the part of the report that provides the most meaningful and complete information. When a report is prepared in more than one volume, repeat the primary title, add volume number, and include subtitle for the specific volume. On classified documents enter the title classification in parentheses.

Block 5. Funding Numbers. To include contract and grant numbers; may include program element number(s), project number(s), task number(s), and work unit number(s). Use the following labels:

C	- Contract	PR	- Project
G	- Grant	TA	- Task
PE	- Program Element	WU	- Work Unit Accession No.

Block 6. Author(s). Name(s) of person(s) responsible for writing the report, performing the research, or credited with the content of the report. If editor or compiler, this should follow the name(s).

Block 7. Performing Organization Name(s) and Address(es). Self-explanatory.

Block 8. Performing Organization Report Number. Enter the unique alphanumeric report number(s) assigned by the organization performing the report.

Block 9. Sponsoring/Monitoring Agency Name(s) and Address(es). Self-explanatory.

Block 10. Sponsoring/Monitoring Agency Report Number. *(If known)*

Block 11. Supplementary Notes. Enter information not included elsewhere such as: Prepared in cooperation with...; Trans. of...; To be published in.... When a report is revised, include a statement whether the new report supersedes or supplements the older report.

Block 12a. Distribution/Availability Statement. Denotes public availability or limitations. Cite any availability to the public. Enter additional limitations or special markings in all capitals (e.g. NOFORN, REL, ITAR).

- DOD - See DoDD 5230.24, "Distribution Statements on Technical Documents."
- DOE - See authorities.
- NASA - See Handbook NHB 2200.2.
- NTIS - Leave blank.

Block 12b. Distribution Code.

- DOD - Leave blank.
- DOE - Enter DOE distribution categories from the Standard Distribution for Unclassified Scientific and Technical Reports.
- NASA - Leave blank.
- NTIS - Leave blank.

Block 13. Abstract. Include a brief *(Maximum 200 words)* factual summary of the most significant information contained in the report.

Block 14. Subject Terms. Keywords or phrases identifying major subjects in the report.

Block 15. Number of Pages. Enter the total number of pages.

Block 16. Price Code. Enter appropriate price code *(NTIS only)*.

Blocks 17. - 19. Security Classifications. Self-explanatory. Enter U.S. Security Classification in accordance with U.S. Security Regulations (i.e., UNCLASSIFIED). If form contains classified information, stamp classification on the top and bottom of the page.

Block 20. Limitation of Abstract. This block must be completed to assign a limitation to the abstract. Enter either UL (unlimited) or SAR (same as report). An entry in this block is necessary if the abstract is to be limited. If blank, the abstract is assumed to be unlimited.

PROGRESS REPORT

FOR

WEAPON TRAINING INSTRUMENTATION

Naval Training Systems Center

PR 2611P5

CDRL A001

SEO JOB NO. W-1573

5 May 1991

Prepared by:

Schwartz Electro-Optics Inc.

3404 N. Orange Blossom Trail

Orlando, Fl. 32804

May 6, 1992

1.0 GENERAL

This is the first letter progress report. This report covers the period 29 January 1991 through 29 April 1991.

2.0 ACCOMPLISHMENTS

Our status report was presented to P.M. Trade at a meeting held at P.M. Trade on May 5, 1992. Attendees were Mr. Hung Nguyen (P.M. Trade), Mr. Jim Surhigh (P.M. Trade), Mr. Steve Preston (SEO), and Mr. Fred Cordua (SEO). A copy of that report is attached.

3.0 PLANS FOR NEXT PERIOD

We plan to continue our ongoing efforts with emphasis on small arms. We will conduct some preliminary tests using small arms. We also plan to obtain some potential user feedback to help determine the most desirable configuration of the many options as discussed in the attached report.

Fred R. Cordua

Fred R. Cordua
Program Manager

Accession For
NTIS GRA&I ☑
DTIC TAB ☐
Unannounced ☐
Justification per letter
By
Distribution/
Availability Codes
Dist | Avail and/or Special
A-1

WEAPON TRAINING INSTRUMENTATION

OVERVIEW

The project objective is to design a non-intrusive instrumentation package that will record the individual soldiers actions and performance such as sight picture, weapon spatial orientation at time of fire, and the pattern of physical interactions with the weapon during live fire and force on force training exercises. The recorded information would then be available for the post exercise analysis where the instructor would critique the soldier. This recorded information could also monitor the soldiers progress and quickly identify any remedial training required.

PROPOSED APPROACH

Figure 1 original proposed approach to meet the original objective. A video camera bore sighted to weapon and a video recorder to record the operators visual target acquisition as well as the insertion of pertinent data (lateral and transverse angle display and a when fired indication) for the post exercise analysis.

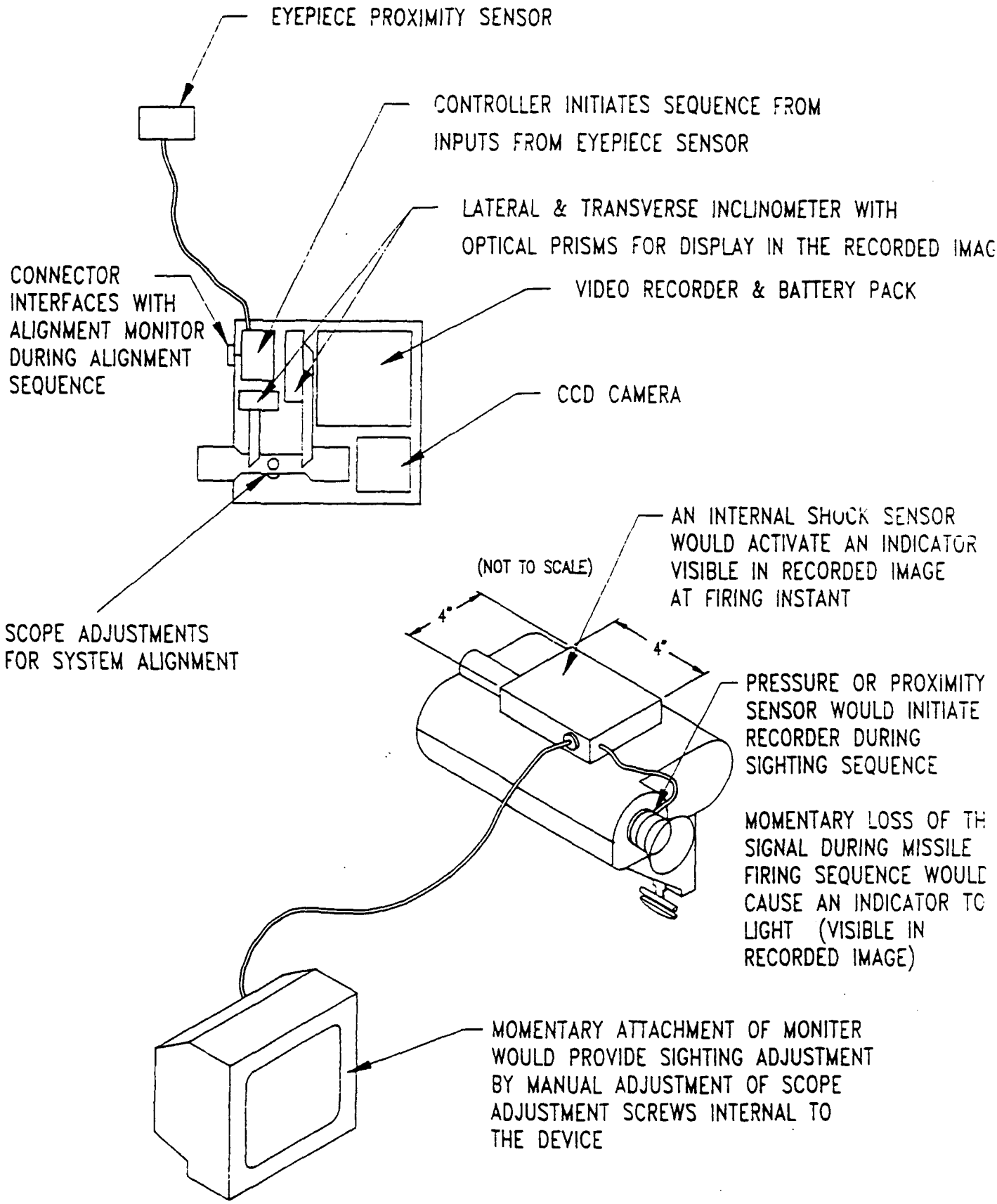

WEAPON, OPERATIONAL RECORDING DEVICE
(WORD)

Q2196W

WEAPON TRAINING INSTRUMENTATION

WHICH WEAPONS SHOULD WE INSTRUMENT

Our original concern were the larger calibre weapons such as TOW, Dragon, Stinger, etc. Several manufactures (Loral, Kollsman, Teledyne Brown) have developed sophisticated training systems for these weapons. Since the per round cost of live ammunition is very costly for this class of weapon, the weapons of more concern are probably the smaller individual weapons where skill levels are increased by firing many rounds of ammunition to improve one's score. The video instrumentation of these individual weapons could prove to be very valuable to both the instructor and the trainee. Let's examine a system proposed for the M-16 Rifle.

INSTRUMENTATION REQUIREMENTS for the M-16 RIFLE

There are two locations from which an instructor is unable to observe his trainee, directly in front of the trainee and the trainee's aim point. This information could be recorded by using small video cameras (Figure 2) mounted on the rifle barrel, one camera (narrow field of view) bore sighted to the weapon (viewing the aim weapon point) and another camera (wide field of view) aimed rearward to view the trainee. An umbilical cord would be required to connect this to the more bulky video recorder which would record the trainers sight picture both before and after firing the weapon as well as the time and date. This continuously on video camera would record all events as they happen for post exercise analysis.

WEAPON TRAINING INSTRUMENTATION

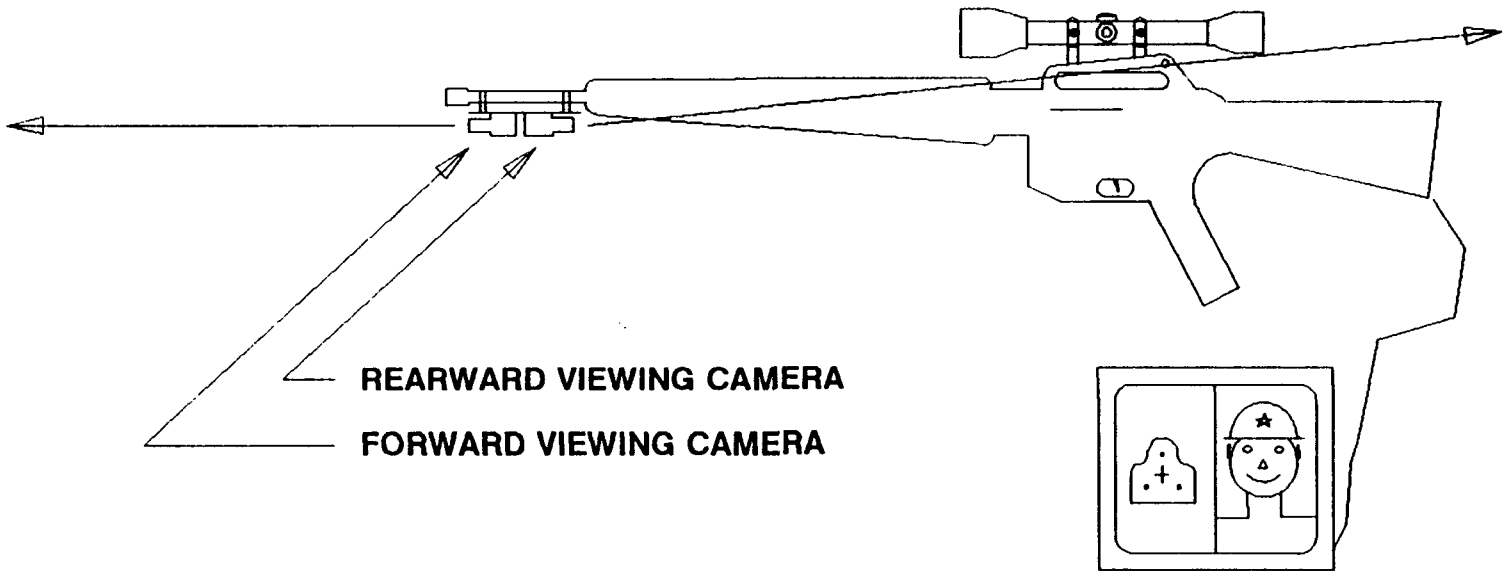

FIGURE 2

M-16 RIFLE INSTRUMENTATION

WEAPON TRAINING INSTRUMENTATION

Why is automatic firing mode so ineffective ?
Did the trainee jerk or flinch when he fired ?
Did the trainee blink when he fired ?
etc.

A video monitor could be provided to allow the instructor to view the activities as they happen with the "instant replay" option.

For force on force engagement simulations the recorder would necessarily be small and probably man worn. The recorded audio would help the instructor determine the players interaction with his crew members.

M-16 INSTRUMENTATION RISK ASSESSMENT

SEO investigation has revealed that there are many manufacturers of sub-miniature video equipment. Figure 3 shows a data sheet for a miniature video camera with good resolution, low lux operational ability, and sensitive to both the visible and the IR light spectrums. This camera should be good for both day and night operation. The auto iris control allows the camera to adjust for changing light conditions. The lenses are standard "C" mount which means that various lenses are readily available. This camera appears to nicely satisfy all of the now known requirements for the M-16 instrumentation.

Options available in the mini video equipment arena include wireless cameras as well as mini video recorders which designed to be man worn.

WEAPON TRAINING INSTRUMENTATION

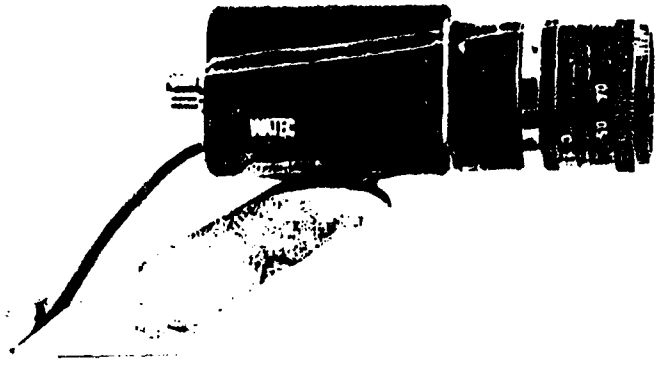

THIS IS THE STANDARD SIZE

- 1/2" CCD (510H×492V or 500H×582V)
- SELFCONTAIND ONEPIECE CAMERA
- AUTO IRIS CONTROL SIGNAL OUT PUT
- STANDARD "C" MOUNT

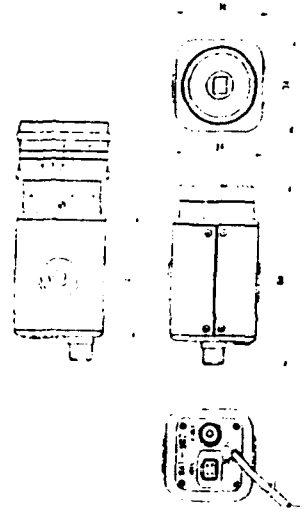

FIGURE 3

MINI VIDEO CAMERA

ADDITIONAL USES FOR THE M-16 INSTRUMENTATION

Although the scope of the proposed instrumentation for the M-16 rifle is to provide data for player action analysis perhaps an expansion of the rifle mounted camera concept could be used in the real world as well for instructor analysis. One could provide a remote miniature video display could be attached as a monocular portion of some type of field glasses which the soldier (or civilian) would wear and would allow the operator to aim the weapon using the information from the display. This would allow the weapon position to be something other than the standard against the shoulder and would allow the operator to accurately fire his weapon around corners (or over his head if in a fox hole) with minimum body exposure to the target.

ADDITIONAL WEAPONS

Once the system is instrumented for a particular weapon expanding the capabilities to include a variety of weapons should be a relatively simple task. The smallest weapons are the greatest challenge due to the necessary small size and weight requirement.

WEAPON TRAINING INSTRUMENTATION

WHAT INFORMATION IS REALLY IMPORTANT ?

- ☑ Video Record of sight pattern
- ☑ Record of the instant the weapon was fired
- ☑ Record of the audio interaction with the crew
- ? Time of Day
- ? Date
- ? Lateral inclinometer information
- ? Transverse Inclinometer information
- ? Range to target information
- ? Velocity of the moving target
- ? Calculated projectile impact

TIME OF DAY AND DATE

Methods for recording time of day and date data are typically features included in most video camcorders.

LATERAL AND TRANSVERSE INCLINOMETER INFORMATION

Lateral & Transverse clinometer information is relatively straight forward information to record. Several devices which output digital and/or analog signals representing the angle of the sending unit are available. The only problem is formatting the information to mix with the video being recorded.

WEAPON TRAINING INSTRUMENTATION

RANGE TO TARGET INFORMATION

An eye safe rangefinder could be built into the system to provide the instructor/analyzer with the range to target information. Current rangefinder technology is still somewhat limited in the area of small suitable eye safe long range rangefinders. The use of retro- reflectors mounted on the targets (as used in PGTS) are very helpful in increasing the effective range of eye safe rangefinders.

The GaAs or NdYlf homogeneous output type rangefinders are currently the most suited for this application. There is some interest in the use of 1550 nm as a suitable eye safe range finder operating wavelength since the eye safe power levels at 1550 nm take advantage of a tenfold increase over conventional AlGaAs lasers.

VELOCITY OF THE MOVING TARGET

Some work has been accomplished in this field by SEO engineers. The concept used relies upon the video input and a comparison of two video images separated by a known time frame. This comparison enables the computer to identify the moving object and to calculate the relative velocity of the object. Using this velocity information along with the ballistic look up table the azimuth correction can be calculated.

WEAPON TRAINING INSTRUMENTATION

CALCULATED PROJECTILE IMPACT POINT

(Refer to section on Golubic Patent)

The calculated projectile impact point could also be recorded and presented to the trainee/instructor to aid the post exercise analysis.

ELEVATION: The elevation correction of the projectile impact point could be calculated through ballistic look up tables if the range information were known.

AZIMUTH: A moving target presents a somewhat more difficult task for ballistic calculations. The moving target's velocity must be known for this calculation.

WEAPON TRAINING INSTRUMENTATION

THE GOLUBIC PATENT

U.S. Patent # 5,026,158 issued June 25, 1991 to Victor Golubic addresses "apparatus and method for displaying and storing impact points of firearm projectiles on a sight field of view". The Golubic invention does not provide a non-intrusive instrumentation package as addressed in the SBIR objective; however portions of the Golubic patented invention may be applicable should we pursue to calculate the impact point. The Golubic invention claims to determine the impact point a projectile with respect to a moving target. Golubic only adds the projectile trajectory distance to the calculated impact point and does not address the velocity and direction of the moving target. The PGTS and Kollsman type trainers do provide this capability for the large weapon trainers. It is probable that the CLASS sight (computerized Laser Sight with/LRF) used by the Sweedish ordinance provides the impact corrections for small arms.

The Golubic invention would probably be good for game hunters as illustrated in the patent however many improvements would be required before the invention would be practical in the law enforcement or military world. When a soldier or law enforcement officer is required to use his weapon there is no time to use the rangefinder technique identified by Golubic. The law enforcement officer's engagements are typically within short operating range and require quick response. The field soldier may have more time but can not be encumbered with knobs to twist and buttons to push. An active ranging and moving target velocity measuring system would need be ready at all times. In such a system the shooter could engage the target in his reticle, depress a switch and have the reticle move to the appropriate corrected aim point. This would need to happen very quickly.

WEAPON TRAINING INSTRUMENTATION

SUMMARY

The availability of methods to provide small arms post exercise analysis data is not readily available. The proposed video system will allow a low cost method for the trainer and\or trainee to conduct post exercise evaluations of the trainee's recorded actions. Expanded capabilities include the use of a video monitor to allow the instructor to view the activities as they happen with the "instant replay" option.

The video system will work well for short range targets however the longer range targets will require additional information to be recorded to allow proper evaluation of the trainee's actions. Range to target data becomes a major necessity for evaluation of this long range target evaluation. This range data could be combined with the video data and a ballistic look up table to determine and project and record the proper corrected aim point.

As with all of the above recorded data there appears also to be a value in presenting this information to the trainee at real time. This becomes especially true of range data and calculated aim point. This presentation could be through a miniature video display attached as a monocular portion of some type of field glasses which the soldier (or civilian) would wear and would allow the operator to aim the weapon using the information from the display. This system would also provide eye protection against the newer systems like LCMS.

At the present time we are concentrating our efforts on the small arms (M-16) video data to be recorded. This recorded target picture should allow the viewer to observe the trainee during his target acquisition, firing, and follow through. We hope to have some actual preliminary tests completed in about three weeks.