REPORT DOCUMENTATION PAGE

Form Approved
OMB No. 0704-0188

(2)

AD-A263 744

Public reporting burden for this collection of information is estimated to average 1 hour per response, including the time for reviewing instructions, searching existing data sources, gathering and maintaining the data needed, and completing and reviewing the collection of information. Send comments regarding this burden estimate or any other aspect of this collection of information, including suggestions for reducing this burden, to Washington Headquarters Services, Directorate for Information Operations and Reports, 1215 Jefferson Davis Highway, Suite 1204, Arlington, VA 22202-4302, and to the Office of Management and Budget, Paperwork Reduction Project (0704-0188), Washington, DC 20503.

2. REPORT DATE	3. REPORT TYPE AND DATES COVERED
1 93	Final 28 Sept 90 through 30 April 93

4. TITLE AND SUBTITLE
Unique Interchangeable Shadow Mask Technology for Advanced HDTV

5. FUNDING NUMBERS
MDA972-90-C-0068

DTIC
ELECTE
MAY 5 1993
S C D

6. AUTHOR(S)
C. J. Sindelar
C. Prazak III

7. PERFORMING ORGANIZATION NAME(S) AND ADDRESS(ES)
Zenith Electronics Corporation
1000 Milwaukee Avenue
Glenview, Illinois 60025

8. PERFORMING ORGANIZATION REPORT NUMBER
Final

9. SPONSORING/MONITORING AGENCY NAME(S) AND ADDRESS(ES)
DARPA
Contract Management Office
3701 North Fairfax Drive
Arlington, Virginia 22203-1714

10. SPONSORING/MONITORING AGENCY REPORT NUMBER
Final

11. SUPPLEMENTARY NOTES

12a. DISTRIBUTION/AVAILABILITY STATEMENT
This report may be freely distributed.

12b. DISTRIBUTION CODE

13. ABSTRACT *(Maximum 200 words)*
A unique interchangeable shadow mask and interchangeable phosphor screening system has been developed for the 22 inch flat tension mask cathode ray tube.

93 5 04 052

93-09486

53pk

14. SUBJECT TERMS

15. NUMBER OF PAGES

16. PRICE CODE

17. SECURITY CLASSIFICATION OF REPORT	18. SECURITY CLASSIFICATION OF THIS PAGE	19. SECURITY CLASSIFICATION OF ABSTRACT	20. LIMITATION OF ABSTRACT
unclassified	unclassified	unclassified	SAR

BEST
AVAILABLE COPY

April 30, 1993

FINAL TECHNICAL REPORT ON

THE DEVELOPMENT OF

UNIQUE INTERCHANGEABLE SHADOW MASK TECHNOLOGY

FOR ADVANCED HIGH DEFINITION DISPLAY

DTIC QUALITY INSPECTED 5

Accesion For	
NTIS CRA&I	☑
DTIC TAB	☐
Unannounced	☐
Justification	
By	
Distribution /	
Availability Codes	
Dist	Avail and / or Special
A-1	

Sponsored by
Defense Advanced Research Projects Agency
Defense Manufacturing Office
ARPA Order No. 6873/6
Issued by DARPA/CMO under Contract #MDA972-90-C-0068.

ZENITH ELECTRONICS CORPORATION
1000 Milwaukee Avenue
Glenview, Illinois 60025

Jerry K. Pearlman
Chairman and President

ADMINISTRATIVE CONTACT:
Charles Sindelar
President
Displays Divsion
(708) 450-4122

TECHNICAL CONTACT:
Charles Prazak III
Division Vice President,
Research and Development
CRT Division
(708) 450-8305

CONTENTS

SECTION		PAGE
A.	INTRODUCTION	1
B.	TASK OBJECTIVES	4
C.	GENERAL METHODOLOGY	6
D.	TECHNICAL RESULTS	7
E.	IMPORTANT FINDINGS AND CONCLUSIONS	24
F.	SIGNIFICANT HARDWARE DEVELOPMENT	25
G.	SPECIAL COMMENTS	27
H.	IMPLICATIONS FOR FURTHER RESEARCH	28

APPENDICIES

1. ZENITH'S FLAT TENSION MASK COLOR DISPLAY CRT
2. PRELIMINARY DATA SHEET FOR THE 22 INCH CRT

SECTION A - TASK OBJECTIVES

INTRODUCTION

This effort was sponsored by Defense Advanced Research Projects Agency, Defense Manufacturing Office, ARPA Order No. 6873/6, Issued by DARPA/CMO under Contract #MDA972-90-C-0068. The views and conclusions contained in this document are those of the authors and should not be interpreted as representing the official policies, either expressly or implied, of the Defense Advanced Research Projects Agency or the U.S. Government.

The FTM (Flat Tension Mask) CRT (cathode ray tube), with its unique flat faceplate, offers both performance advantages and cost saving opportunities. This technology was introduced into production in 1987 in a 15 inch diagonal size as a VGA computer monitor tube. For those unfamiliar with the FTM, Appendix I contains a description of the current FTM tube.

The unique features that differentiate the FTM CRT from a conventional CDT (color display tube) are

> The faceplate is flat and has constant thickness, rather than being bowl-shaped and having varying thickness.
>
> The mask is a thin foil, which is stretched within its elastic limit, rather than a thick, formed sheet which undergoes considerable yield during forming and is quite non-repeatable.
>
> The FTM mask mounting surface can be precision ground to $\pm$ .001 inch flatness whereas the CDT shadow mask is mounted to sloppier tolerances on a frame is a relatively inaccurate stamped sheet metal part.
>
> The FTM shadow mask lies in a plane and the effect of heating is simply a relaxation of the tension in the foil, whereas heating of a CDT shadow mask causes material expansion which bulges the mask out of its proper contour.
>
> The FTM shadow mask is laser welded directly to spacer rails bonded to the faceplate forming a monolithic body, whereas the CDT shadow mask is suspended on a heavy frame which is then mounted on relatively weak pins in the faceplate using springs.
>
> The flat FTM faceplate permits bonding an inexpensive multilayer anti-reflection coated window for specular reflection control, whereas a curved faceplate requires a more expensive curved bonding panel.
>
> The inner surface of the FTM faceplate is easily finished by free-abrasive machining to create an antiglare finish, whereas the curvature and skirt of the conventional CDT preclude such a treatment.

FTM tubes, compete economically head-to-head with flat-panel displays (based on liquid crystal, gas plasma, electroluminescence, field emission, acousto-optic and other technologies), while also possessing the inherent benefits of the FTM system, including:

Flat-faced viewing screen,

Freedom from purity loss due to electron beam heating of the shadow mask,

The ruggedness of monochrome CRTs due to the monolithic structure of the mask support bonded directly to the faceplate,

Greater luminous efficiency due to the inherent precision of the mask/screen spacing,

Almost total absence of glare due to the multilayer anti- reflection coating on the front surface of the viewing screen and the antiglare treatment of the inner screen,

High luminous efficiency of a cathode ray tube.

Finally, the flat panel displays being developed now appear most applicable to transportable and volume limited imaging applications, not to 20 inch and larger display applications envisioned by this work. While the technology is applicable to larger sizes, the research was conducted in a 20 inch diagonal format for expediency. This choice allowed Zenith's existing developmental facility to be used with a minimum expense for new equipment for processing.

These feature of the FTM made it an ideal choice for a high performance computer monitor. In addition, the 15 inch FTM tube has also been ruggedized for military service by stiffening the electron gun mount and changing the mounting of the getter. This ruggedized version has been qualified for use in helicopters. The fact that the FTM CRT has a monolithic faceplate/shadow mask structure means that it does not suffer from the usual color display tube problems of screen shedding, shadow mask failure and frame disengagement.

When considering manufacture of larger sizes of FTM tubes (for applications up to 2 Megapixel), it became apparent that the 1987 era manufacturing techniques and processes would be expensive and difficult. The foremost concerns were the cost of pressed glass faceplates for the perfectly flat geometry of the FTM and the difficulty in handling the large format masks on tensioning frames. In addition, the low resolution of the VGA performance electron gun was not suitable for high resolution displays and a better cathode technology was required to obtain higher performance with long life.

The goal of this work was to evaluate the potential for cost effective manufacturing technologies which could enable manufacture of these larger size (up to 35 inch diagonal) FTM tubes operating in the 1280 by 1024 pixel mode. In order to accomplish this, an interchangeable component manufacturing strategy was conceived. Normally, the non-reproducible shadow mask assembly musk be used as the optical master for printing the screen. The shadow mask must then travel with the faceplate and screen, since no other shadow mask will match the screen printed on this

faceplate. In contrast, the FTM shadow masks could be stretched to highly repeatable size and shape because they were always stretched within their elastic range. This suggested an approach using interchangeable shadow masks and phosphor screens.

The interchangeable mask concept permits interchangeable screens to be printed by non-conventional means. The program perceived two potential benefits from this freedom in screen manufacture; better screen quality than obtainable with conventional projection lithographic printing and freedom from optical errors inherent in bending light to approximate the paths of electrons deflected in a CRT.

The specific task objectives were these:

The first objective was to develop a membrane stretching and welding technology for shadow masks which produces a monolithic assembly of a shadowing membrane (in registry) with a patterned plate. The accuracy of registration must be a small fraction of the mosaic pitch which is 200 to 300 microns.

The second objective was to select the best interchangeable phosphor screen process. The candidates included proximity exposure, photolithographic screening and mechanical offset gravure printing.

The third objective was to develop a cost effective faceplate manufacturing, finishing and assembly process with higher accuracy than currently available. To obtain flatness of large area glass sheets used in current FTM displays within 50 microns requires expensive finishing (grinding and polishing). The goal of this development is to obtain the required flatness at equivalent or lower cost by employing the float glass process instead of pressing.

The fourth objective was to develop an electron gun for a large, high definition display tube which provides adequate brightness and life at the higher electron beam current densities used in larger high-definition displays.

The fifth objective was to take advantage of the improved dimensional accuracy of the faceplate assembly and to develop an interchangeable, mechanically printed screen production process. Mechanical printing will significantly reduce the cost of factory facilitation and manufacture.

SECTION B - TECHNICAL PROBLEMS

There were a considerable number of fundamental problems to overcome. The typical problem was the unavailability of a specific facility or the inadequacy of equipment identified in the original plan These problems were overcome and the effect was simply a stretch-out of the program.

For example, the process of manufacturing CRT faceplates of float glass had not been accomplished before by United States vendors, there was considerable research and laboratory trials before the first large scale test occurred. Even then, the only float line which was available for the experiment run was the small PPG facility in Cumberland, MD. This proved to be a poor choice, since the material lining that fore-hearth (the glass melting and mixing tank) was not compatible with the glass and shed small particles into the molten glass.

In another sense, this was an ideal choice, because it allowed evaluation of the potential for process control studies (higher melting temperatures should dissolve the particles and render them harmless while colder temperatures would retard the shedding). This allowed us to identify a potential problem and generated enough glass for the development of all of the finishing experiments.

A second problem occurred in our partnership with PPG. They had anticipated adequate capacity for our needs in their Perry, GA float glass facility and we had set our plan to make a second run there. When business conditions precluded PPG from freeing enough time for our run, we were forced to change vendors. LOF was accepted the challenge to make our glass and established a small capacity run at the Pilkington facility in England. The run was successfully accomplished, however the materials were not optimum for our thicker glass and equipment problems forced the run to be stopped before all the desired glass was complete.

Another problem occurred in the development of the controlled porosity dispenser cathode. The initial choice of materials was a tungsten/rhenium drawn cap. The problem with this material is that it did not have the proper ductility for the shape of cup that we needed and frequently cracked during the drawing step. The tortuous path of alternative approaches led us away from the desirable metallurgy to (1) a molybdenum/rhenium cap which could be fabricated but which required higher operating temperatures, which in turn caused premature barium exhaustion and heater failures, (2) investigation of Toshiba's I-type cathode, which showed early life failure due to heater/cathode leakage, (3) an evaluation of Matsushita's B-type cathode and finally back to the original choice. The solution employed was a simple part redesign which eliminated the deep draw and the cracks.

A major problem developed in the area of artwork generation. The proximity exposure process depends on the availability of master artwork for exposure of the grille and phosphor patterns. This artwork must be accurate to better than a micron and produce no periodic errors which will be visible as Moire between the shadow mask aperture pattern and the phosphor artwork pattern. In reviewing the first 15 inch diagonal screen artwork produced on a Gerber plotter of the quality

used to plot the shadow mask aperture array, we found a Moire pattern that indicated a few micron amplitude oscillation of the printed pattern, which only occurred on the grille master artwork. The TI laser photoplotter produced a pattern which showed no Moire against the shadow mask pattern.

When we considered making the larger artwork for the 22 inch diagonal tube, we found our next problem. The Gerber machine was large enough to make such artwork, but we had not identified the cause of the cosmetic pattern defect and were not assured that it would be satisfactory. TI did not have a large enough machine in their facility to provide such large artwork. We compromised by renting time on a TI machine owned by IBM and we encountered another unexpected problem. The longer patterns to be exposed caused greater heating in the laser modulator and the control of the laser intensity proved impossible. The artwork showed slight banding (variation in aperture diameter) due to this instability in the laser intensity. We managed to process the silver halide masters to reduce the aperture size variation in the final working masters. We are now waiting for access to a new TI laser photoplotter or access to Terapixel's artwork generator which should eliminate this problem.

Another difficulty is in obtaining iron oxide master plates in the flatness grade required. We were credited for many out-of-specification plates by the manufacturer (Towne Labs) for out-of-flat conditions which would have produced poor positional accuracy. This occurs because the copy illumination for copying the original to a working master travels perpendicular to the plate and the screen printing light travels along the simulated electron trajectory. A discrepancy in the flatness between the two produces a positional error proportional to the out of flatness and to the difference in the angles of illumination. We have also developed a shimming technique to correct for working master height and master substrate flatness errors.

A final problem worthy of mention is the lack of a supporting United States infrastructure in shadow mask steel and foil etching. We still rely on DNP (Japan) as the principle vendor for shadow masks.

SECTION C - GENERAL METHODOLOGY

The approach to achieving the objectives was a straight forward engineering approach. The concepts were fundamentally sound, the opportunity was unexplored and the prognosis was highly optimistic.

Since the 15 inch FTM parts and equipment were already available, the first phase of the program was conceived as a proof of concept in the small size. The new processes and equipment needed were developed in-house, with the exception of commodity equipment and experiments on rented flexible machinery.

For example, to prove that the shadow mask could be stretched to precise size and shape, a special stretching machine for the 15 inch shadow mask tensioning was built and tested. The results of those tests were incorporated into a 15 inch assembly machine which stretched the mask, aligned it to the panel and welded the two together. After significant testing of that machine, a large format (20 inch and larger) machine was designed and built. By planning three cycles of refinement, the last machine contained a high degree of automation and operated at production speeds to prove production feasibility.

In contrast, the concept of offset gravure printing appeared to be an attractive, but risky, alternative to proximity exposure photolithography. The methodology for testing this was discussion with corporate experts, printing industry experts and experimentation on special setups of existing gravure machinery. Through this process, we were able to identify the problems early, and to limit our in-house experimentation to a single custom machine. This facility is now used to continually evaluate improvements in the printing industry.

Finally, there were a number of purchased components. These were managed by establishing a good mutual understanding of all of the critical parameters of the purchased items, frequent consultation with the vendor, a willingness to engineer our processes to accommodate the vendors desires and a hands-on approach to parts acceptance at the vendor. In one case, we even gave a two hour tutorial on our particular glasses and processes to our glass vendor's general research staff to insure that information was broadly disseminated and that no one participating in the program would be misinformed.

SECTION D - TECHNICAL RESULTS

Zenith has successfully demonstrated the feasibility of these concepts and is now developing specialized factory equipment under DARPA grant MDA972-92-C-0017. The significant developments required to accomplish this included the following items.

Interchangeable shadow mask stretching mask processes were developed and a machine was built which stretches the mask to size, locates it in registration with the panel and then laser weld it to the rails on the panel.

The first experiments were conducted on a two-degree-of-freedom stretch machine. That is to say, clamps were coupled to the shadow mask material on all four sides of the rectangular blank, but pulling forces were only applied on two sides. The results of many hours of machine adjustment, lubrication, clamp redesign and measurement method refinement was determination of a pattern of statistical variation shown in Table 1.

3-sigma errors at the principle points

Position	x	y	d
TOP/BOTTOM	.23	.38	.44
CORNER POINTS	.31	.14	.34
LEFT/RIGHT	.24	.16	.29
CENTER	.11	.19	.22

TABLE 1. - Average residual errors stated in mils at the 3-sigma magnitude for horizontal (x), vertical (y) and total (d) displacement.

These errors were deemed excessive and a principle components analysis indicated that the errors could be reduced significantly by increasing the number of pulling points. These principle components and their 3-sigma magnitudes are summarized in Table 2.

Principle components of the stretch errors

Component	3-sigma	correction
TOP/BOTTOM BOW	.38	use 3 pullers on the top & bottom
HORIZONTAL TRAPEZOID	.29	use 2 pullers on the left & right
LEFT/RIGHT BOW	.24	use 3 pullers on the right & left
VERTICAL TRAP	.12	use 2 pullers on the top & bottom
PARALLELOGRAM	.12	use 2 pullers each side

TABLE 2 - Pareto ranking of the principle errors of stretch

The conclusion from this data is that the majority of the error could be eliminated with a stretch machine having 3 pulling actuators per side, or a configuration we call a 12-degree-of-freedom stretcher. The planning for the large format stretch/weld machine was modified to include the 12-degree-of-freedom system.

The construction of the first stretch machine with a capability for welding the mask to the panel took several months. During that time, an initial proof of concept was completed quickly. A simple stretch frame was manufactured which had an intermediate configuration. Four displacement adjustments were provided on the top and bottom of the mask and two on each side (a total of ten). A mask was tensioned in this frame until the tension was proper (about 10 to 15 Kpsi) and the location of the apertures in the mask was mapped on a shadowgraph.

This single mask was used to print many grille/phosphor screens photolithographically, making a series of interchangeable faceplates. Then this master mask was replaced with new masks which were tensioned until the mask apertures were properly located, making them interchangeable masks. These stretched masks were mated to the interchangeable screens and the results conclusively showed the interchangeable concept worked.

A 15 inch diagonal size laboratory stretch weld machine was built with four-degrees-of-freedom to test the optical interrogation problems of the automatic stretch/weld equipment. This machine was used to study the clamps, optics, software and other details of such a machine. It also produced a number of 15 inch interchangeable system tubes.

This machine is shown in Figure 1. The undercarriage of the machine supports two shuttles, one of which is shown on the left side and carries the shadow mask blank to the center of the machine and raises it to the plane of the clamping and stretching mechanism. The other shuttle carries the panel and is shown on the right. This shuttle has three motors coupled to its table to position .and rotate the panel to the proper position relative to the shadow mask.

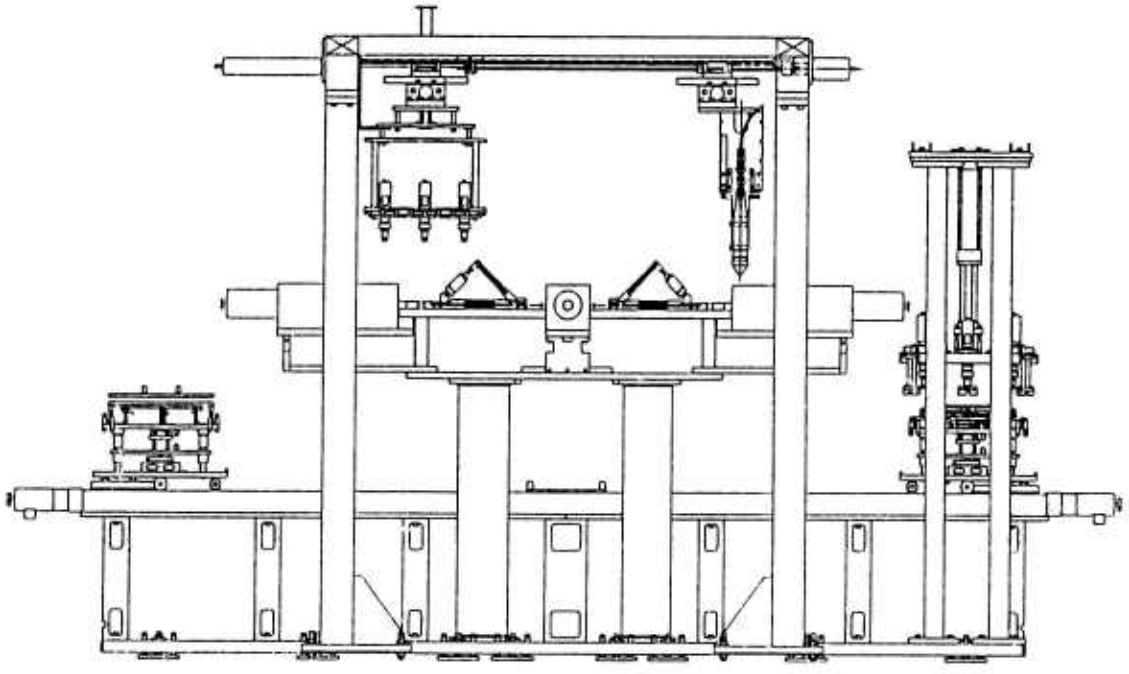

Figure 1. The 15 inch stretch and weld machine

The operation of this machine progresses as follows:

A mask is loaded on its shuttle and the shuttle carries it to the central area and raises it to the plane of the clamps.

The clamps (grasshopper-like pneumatic/lever elements shown at mid height in the center of the figre) advance around the mask and the clamps close on the border of the mask.

The 9-point observation microscope assembl, (upper left in the figure) advances to observe the mask while it is being stretched.

The mask is stretched to size and the displacement and rotation observed in the microscopes is recorded.

The panel is loaded in its shuttle and the displacement and rotation oberved and the mask support rail positions are recorded.

The panel is manipulated by the motors in its shuttle table to the correct positon.

The miscroscope stage is replaced by the laser welder head (right side) and the panel shuttle advances the panel to the center and raises it to contact the mask.

The laser welding head is activated and progresses around the rail rectangle, stitching the shadow mask to the metal of the support rails.

Finally, the large format (up to 27 inch) 12-degree-of-freedom stretch/weld machine was designed and built as a production prototype under contract MDA982-92-C-0017. This choice accelerated the evaluation of the production machine by eliminating the need to modify the small, laboratory stretch/weld machine. This provided an expeditious path to the 12-degree-of-freedom system.

The float glass faceplate was developed in conjunction with LOF/Pilkington and Intricut. This part has been introduced into production in 15 inch and 17 inch CRT production. First, the float glass process creates sheets of float glass in the LOF or Pilkington factory. These are processed by Intricut using water jet cutting to cut the correct size part. The parts are free abrasive machined to create the antiglare inner surface finish and the edges are arrissed (bevelled) to prevent chipping. The initial problems in this development were described in Section B. In addition to changing from PPG to LOF/Pilkington in the middle of the program, we also changed the finishing operation from USPG to Intricut for economic reasons.

The glass composition is non-browning, lead-free (with Sr, Ba, Zr x-ray absorbers) and has an expansion coefficient quite close to the expansion of the Corning type 9068 glass it replaces. The Pilkington glass does appear to be less compacted (less dense) and its expansion coefficient changes more on annealing than does the pressed glass. This difference is negligible when one considers there are two frit cycles for FTM faceplates (one to attach the mask support rails and one to seal the panel and funnel together.

After attachment of the rails by fritting, the mask welding surface is precision ground on an orbital head grinder. Considerable effort was expended in comparing orbital head grinders finishing stationary parts to stationary (simple downfeed) heads finishing parts rotating on a table. We have concluded that, with the ultimate offset gravure printed screen, the rotating table, stationary head machines will provide the greatest throughput at the required tolerances. However, until mechanically printed screens are introduced, either method will suffice.

Interchangeable phosphor screening processes were developed using iron oxide on glass, proximity exposure masters instead of the shadow mask. The initial negative results in tests of commercial offset printers led to the adoption of the proximity exposure, lithographic screening approach to grille and phosphor printing. This required the development of master artwork generation, the proximity exposure equipment and the software to iterate the experimental results into the next master design.

Initially we adopted a parallel approach to reduce the risks, choosing to make the first 99-patch artwork on a Gerber 1430 photoplotter at Infinite Graphics (MN). With the measured error results from this artwork, we defined a better set of dot locations and had both Infinite Graphics and TI make a complete set of artwork. The results showed the aforementioned problem of

Moire between the Infinite Graphics grille artwork and their dot artwork and a minor problem of digitization errors with the TI artwork.

This latter problem occurs when hole size changes spatially. The algorithm for generating the dots produced a pixellated representation which grows in finite jumps as the dot size grows linearly. This produces pronounced bands of dots of the same size, even though the specification calls for gradual change across the band. Several corrective possibilities can be considered to overcome this problem, including the well known process of error diffusion or a process of changing to non-symmetric dots which can grow with smaller jumps (down to double pixel steps {symmetric growth} or single pixel steps {asymmetric growth}).

Table III lists the companies contacted to try to satisfy our photoplotting needs. Of these, TI and Terapixel seem best able to make this artwork, others that may have this capability have quoted costs five times higher. However, TI has no commitment to create a service center to do our type of work. This shows yet another gap in technical capabilities in the US.

An in-house facility was developed to copy the master artwork to working masters. This consists of a BASF exposure station, a Chemcut etcher, developing tanks and the appropriate clean-room and storage facilities. Numerous experimental runs were made to optimize the process before the copies were satisfactory. Excessive contact pressure between the master and the copy produced contamination and exposure intensity proved critical. The best method proved to use an exposure geometry with a slight gap between the master and copy and the rigorous avoidance of any stray light.

Infinite Graphics
12855 Highway 55
Plymouth, MN 55441

Max Levy Autograph, Inc.
Wayne Ave. and Berkley St.
Philadelphia, PA 19144

Texas Instruments
13510 N. Central Expressway
MS 428
Dallas, TX 75265

Applied Image, Inc.
1653 E. Main St.
Rochester, NY 14609

Buckbee-Mears Cortland
P.O. Box 189
Cortland, NY 13045

IBM Corp.
Dept. 250-1
1701 North St.
Endicott, NY 13760

Micronic Laser Systems
P.O. Box 3141
S-183 03 Taby
Sweden

Quantronix Corp.
Semiconductor Systems
49 W eless Blvd.
P.O. Box 9014
Smithtown, NY 11787-9014

Photo Transfer Industries
837 Hawthorn Lane.
Libertyville, IL 60048

Micro Phase Lab
Albuquerque, NM

Teledyne Gurley
514 Fulton Street
Troy, NY 12181

Gage-Line Technology, Inc.
121 LaGrange Street
Dept. 29
Rochester, NY 14613-1511

Klarmann Rulings , Inc.
PO Box 4795
Manchester, NH 03108

Terapixel Inc.
Olarlniuoma 9
SF - 02200 Espoo,
Finland
Arto Salin, President

Dai Nippon Screening
3235 Difer Road Suite 100
Santa Clara, CA 95051

TABLE 3 - COMPANIES PROVIDING CUSTOM ARTWORK PREPARATION

The other development for the interchangeable screening process was the exposure lighthouse to hold the artwork in registration with the panel to be printed. This was quite similar to the conventional lighthouse in that it had a shuttered high pressure mercury capillary lamp for a light source. However, it was quite different in that it had to present the panel to the artwork as if the artwork was a shadow mask stretched over the rails of the panel. The equivalent to flexing the artwork over the rails (which would have potentially damaged the artwork) was to deform the panel to planar stops. The panel glass is thick (.800 inch), but the low modulus of elasticity (approximately 9 million psi) and the flatness of the panel produced by float glass techniques permit this to be done with less than 100 pounds load per preload pad.

Techniques for mounting the artwork in the proximity exposure, screen printing lighthouse needed significant development. The principle problem was correction for the flatness and height of the master in the lighthouse. The mounting procedure now includes adequate capability to compensate for placement and out-of-flat master deviation..

Several long lived cathodes were evaluated and mounting systems developed to permit the use of any of these cathodes in the product. The evolution of the testing and mounting developments was recounted in Section B. These required individual mounting arrangements, since each construction was slightly different. In addition, the rate of activation and the resulting work function varies with material, temperature and geometry. The challenge was to optimize the mounting arrangement of the cathode and its heater, develop an optimum activation schedule and then life test sufficient tubes to determine the proper operating temperature and the life and emission maintenance characteristics.

The principle failure mechanisms are emission loss due to excessive barium evolution or heater failure due to the thermal degradation of the insulation between the heater and the cathode at excessively high operating temperatures. The testing has given adequate comparison to identify the current choice of the Semicon I-type cathode having a 5:3:2 composition for the experimental tubes.

Experimental parts for the sample 22 inch FTM CRTs were fabricated and two sample FTM CRTs were built, mounted in single frequency 1280 by 1024 pixel monitors and delivered to DARPA. The unique cathode ray tube parts which were fabricated for this development are described below.

Funnel - tooled by OI-NEG The original design strategy was an in-house design analysis in parallel with a competition between CAV and OI-NEG. The choice was a basic matter of economics, although CAV did present a hypothetical design with slightly superior weight/strength characteristics.

Finite element analysis shows the highest tensile stress in the envelope occurs on the long sides of the funnel, approximately 1.5 inches below the frit seal. This stress predicts a satisfactory

bulb strength of 42.3 psi for a minimum faceplate thickness of .800 inch. The model has been confirmed in pressure testing.

Mask support rails - fabricated internally. The original proposal was to use a ceramic spacer with a thin metal cap. However, evaluation in the 15 inch evaluation phase of the program indicated that the geometry was difficult to clean. Particulate contamination carried on the ceramic/metal surfaces could not be dislodged in cleaning and contaminated the tube, leading to cosmetic defects or to early life failures.

Therefore, we continued the commercial practice of using a Carpenter 27 alloy metal "V", joined to the panel with a matching expansion frit.

Anode mounted getter - tooled by SAES. This mounting technique is commonly used in Europe by Philips and Nokia, although it has received little attention in the US. It is reported that this getter has less interference with convergence and purity than the conventional getter.

Anti-reflective safety panel - fabricated by O.C.L.I. The safety panel is coated with a multilayer anti-reflection coating to yield a specular reflectivity less than .2%. This type of panel and lamination resin has been previously qualified for military service.

External shield - fabricated internally. The shield is a simple cut, fold, overlap the seams and weld approach to the low cost, limited sample quantity requirement.

Shrink-band - fabricated internally. The shrink-band is a thermal fit compression band applied around the faceplate of the FTM CRT for additional safety. It holds the glass of the faceplate intact when a missile strikes the CRT and causes cracking. By retaining the structural integrity of the faceplate until the internal and external pressures equalize, glass fragments are prevented from accelerating and being expelled toward the operator.

Yoke assembly - fabricated by Thomson Tubes and Devices. This yoke is the first step in a longer term design cycle. The convergence and raster geometry is adequate for the initial evaluation of the CRT manufacturing technology, but leaves a bit to be desired.

The remaining CRT components are similar to components used in the 15 inch and 17 inch production FTM CRTs.

MECHANICAL PRINTING

In addition to the primary program to demonstrate a production-worthy manufacturing process in finished cathode ray tubes, we continued investigations of the alternative grille/phosphor screen printing processes. The initial experiments were performed on recently rebuilt (and theoretically as mechanically stiff as possible) rotary presses to determine the repeatability of the process. These machines showed a significant longitudinal position variation traced to the additional

bearing tolerance of the rotary drum carrying the gravure plate.

After significant attempts to improve the basic rotary machine with anti-backlash gears, servo control and the maximum practical stiffening, we concluded that we would avoid this problem if we changed the machine concept to a flat-to-flat, multiple pass approach as shown in Figure 2. What we abandoned was the ideal of a multi-fountain, single offset transfer machine.

This led to the construction of a machine that picked up ink from a flat gravure onto a cylindrical offset roll and then transferred the ink to the faceplate. The concept for the ultimate machine is shown in Figure 2. The machine would have gravures which are flat plates with appropriate wells to hold the ink in the proper spots. These are shown on the left side of the figure. Distribution of the ink into the wells in the gravure is done with the two blades shown, an ink flood blade which distribures the ink generously over the gravure and then the excess ink is squeegeed away by the doctor blade.

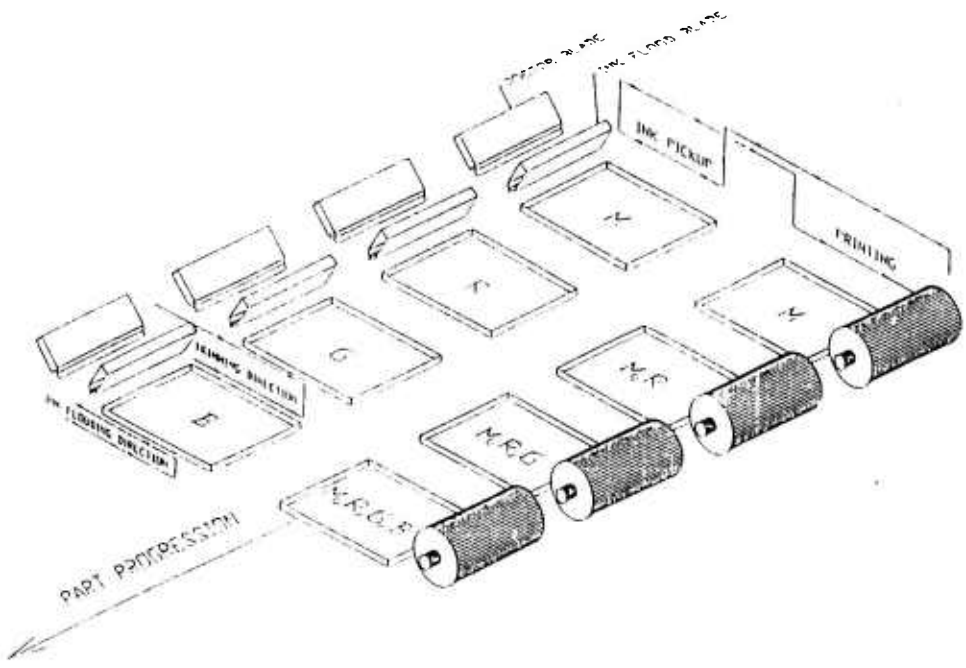

FIGURE 2. Offset gravure printing concept

The ink tranfer to the faceplate is done with the four transfer rollers, one for the black grille (M) material and one each for the red (R), green (G) and blue (B) phosphors. These would pass over the gravures where the ink adhers to the transfer roll. The transfer roll continues on to the faceplate where the ink is released onto the glass. The requirements for this system are well known, with the affinity of the ink highest for the glass, next highest for the trannsfer roll material and least for the gravure.

The apparatus constructed to experiment with this concept is shown in Figure 3. This shows a shuttle base which carries two gravure stages and a faceplate stage. The central section of the apparatus carries an orthogonal slide which can carry the blades for inking a gravure or the transfer roller. Through indexing the appropriate stages and ink handler, the continuous printing operation can be simulated.

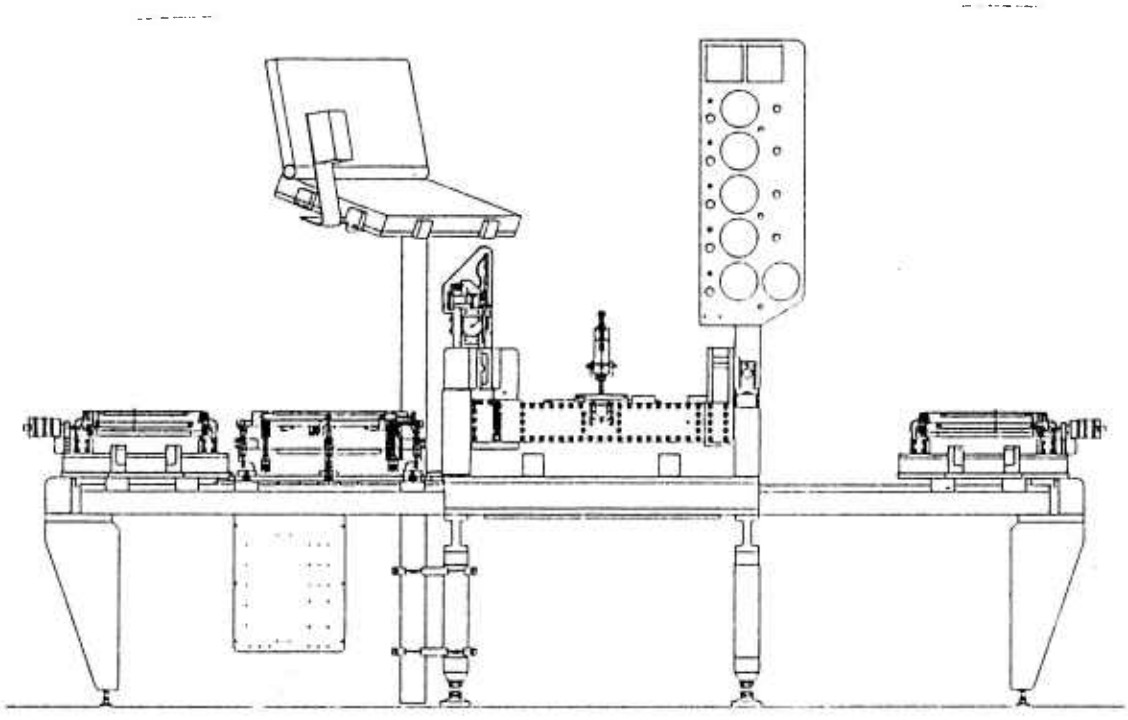

Figure 3. Experimental printing apparatus

Satisfactory inks were identified which are compatible with the other aspects of CRT manufacture (vapor pressure, low char, halogen free, etc.). These are quite similar to the inks described in the Corning patents on decorating ceramics with glass frits. The conventional phosphors work well but the typical graphite black matrix material must be replaced with manganese carbonate, which converts to the black oxide during the thermal processing of the tube.

CONVERGENCE DATA

Date: 4/22/93
Yoke # 22A0
Crt # A30–3
Scale: 10:1 2mm/Div

CONDITIONS: No Helpers, No Dynamic convergence

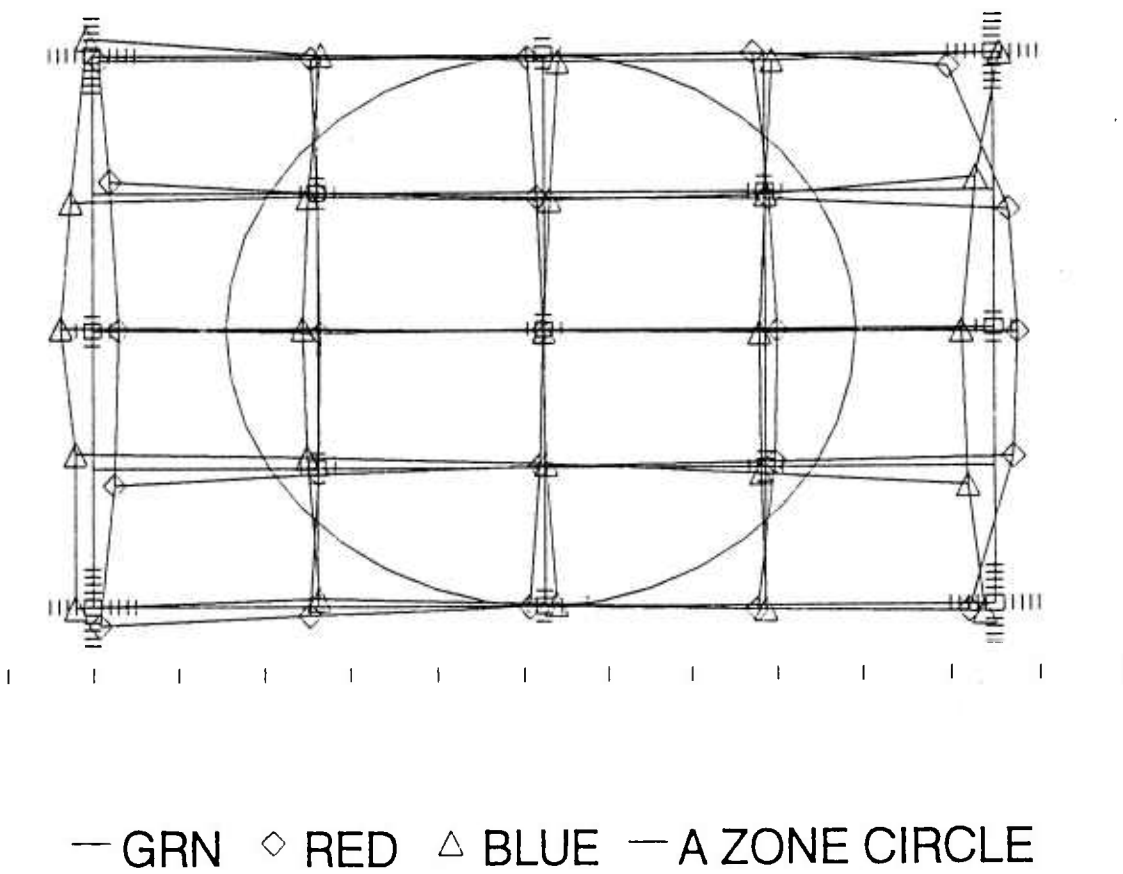

FIGURE 4. Convergence data for the first Thomson yoke on the 22 inch tube

YOKE# 22A0 CRT# A30-3

NOTE: SHADED AREAS OUT OF SPEC.

CARDINAL POINTS	CONVERGENCE IN MILLIMETERS MEASURED REFERENCE TO GREEN						
CLOCK POSITION	XR	YR	XB	YB	XR-B	YR-B	COMA ERROR
12	-0.385	-0.078	0.34	-0.187	-0.725	0.109	-0.1325
6	-0.361	-0.023	0.275	0.058	-0.636	-0.081	0.0175
9	0.616	0.011	-0.756	0.078	1.372	-0.067	-0.07
3	0.528	-0.12	-0.727	-0.073	1.255	-0.047	-0.0995

B ZONE	CONVERGENCE IN MILLIMETERS MEASURED REFERENCE TO GREEN						
CLOCK POSITION	XR	YR	XB	YB	XR-B	YR-B	COMA ERROR
1	-0.265	0.031	0.171	-0.177	-0.436	0.208	
2	-1.006	-0.354	0.157	0.003	-1.163	-0.357	
2:30	0.333	-0.508	-0.39	0.341	0.723	-0.849	
3	0.528	-0.12	-0.727	-0.073	1.255	-0.047	-0.0995
3:30	0.43	0.245	-0.589	-0.508	1.019	0.753	
4	-0.574	-0.153	-0.227	-0.194	-0.347	0.041	
5	-0.199	-0.108	-0.002	-0.105	-0.197	-0.003	
7	-0.189	-0.231	0.027	0.198	-0.216	-0.429	
8	0.172	-0.497	-0.405	-0.014	0.577	-0.483	
8:30	0.511	-0.452	-0.405	0.397	0.916	-0.849	
9	0.616	0.011	-0.756	0.078	1.372	-0.067	-0.07
9:30	0.413	0.307	-0.516	-0.228	0.929	0.535	
10	0.162	-0.123	-0.122	0.466	0.284	-0.589	
11	-0.144	-0.088	0.086	0.011	-0.23	-0.099	

A ZONE	CONVERGENCE IN MILLIMETERS MEASURED REFERENCE TO GREEN						
CLOCK POSITION	XR	YR	XB	YB	XR-B	YR-B	COMA ERROR
1a	0.099	-0.205	0.016	-0.084	0.083	-0.121	
3a	0.288	-0.049	-0.131	-0.112	0.419	0.063	
5a	0.219	0.132	-0.105	-0.175	0.324	0.307	
6	-0.361	-0.023	0.275	0.058	-0.636	-0.081	0.0175
6a	-0.114	0.038	0.035	0.096	-0.149	-0.058	
7a	0.007	-0.153	-0.256	0.292	0.263	-0.445	
9a	0.066	-0.076	-0.348	0.051	0.414	-0.127	
11a	-0.009	-0.006	-0.223	-0.1	0.214	0.094	
12	-0.385	-0.078	0.34	-0.187	-0.725	0.109	-0.1325
12a	-0.177	-0.139	0.133	-0.208	-0.31	0.069	
C	-0.032	-0.026	-0.016	-0.051	-0 016	0.025	

TABLE 4. Convergence errors for the first Thomson yoke on the 22 inch tube

CRT PERFORMANCE

The performance of the CRT shows that the principle of interchangeability has been demonstrated. Several specific performance improvements have been identified which will improve the performance of the ICM process CRT. Starting with the deflection yoke, we can seen in Figure 4 and Table 4 that yoke #22A0 needs about 1.26 mm of red-blue convergence on the right side (3:00 position) and about 1.37 mm on the left side (9:00 position). Other performance improvements logically follow after the deflection yoke is further developed.

The electron gun is the CMP693 which was developed in slightly smaller glass bulbs due to the shortage of glass available for experiments. This gun features dynamic quadrupole yoke aberration compensation, a 14 mil grid 1 aperture diameter, the dispenser cathode and a symmetrical Beam main focus lens. Typical spot performance at 200 and 400 microampere beam currents is listed in Table 5 for operation in a 25V envelope (slightly longer beam path to the center, similar beam path to the corner of the screen)..

25V100 MONOCHROME BULB
28KV, 120V CUTOFF, FIXED F1 = 7550V
MICROVISION MEASUREMENT 4 CORNER AVERAGE

	CORNER (1311V DYN) F2 = 8633		CORNER (896V DYN) F2 = 8218		CORNER (710V DYN) F2 = 8032	
	R/B H * V	GREEN H * V	R/B H * V	GREEN H * V	R/B H * V	GREEN H * V
200uA 5%	55.1*27.5	55.3*24.5	47.5*47.5	49.8*31.8	42.0*48.1	45.8*32.0
50%	33.3*18.6	26.5*15.3	24.3*27.5	22.5*16.0	25.9*28.1	22.5*16.0
400uA 5%	61.0*33.8	63.5*26.0	62.4*45.0	45.8*22.8	66.4*78.3	54.8*54.8
50%	36.6*18.6	28.8*16.3	41.1*27.0	21.8*12.8	43.5*51.9	29.5*31.5

	CENTER F2 = 7322	
	R/B H * V	GREEN H * V
200uA 5%	35.5*30.5	42.0*26.0
50%	17.5*12.0	20.0*13.0
400uA 5%	39.0*33.0	42.0*34.0
50%	22.5*15.5	21.0*19.0

TABLE 5 - MEASURED SPOT SIZE FOR THE CMP693 ELECTRON GUN

Because the gun was first optimized in a slightly smaller envelope, the magnification with the 22 inch bulb is about 30 % larger than desired and the outer beams are wider spaced in the focus lens than desired. These problems will be addressed with a refined main lens geometry, a modi-

fication to the focus electrode length to reduce the magnification and with a more horizontally divergent immersion lens (triode section with a cylinder lens in grid 2) design.

The focus differential (corner focus voltage minus center focus voltage) is about 1000 volts. For chassis with lower dynamic focus swing, this should be reduced by increasing the sensitivity of the quadrupole lens.

These gun improvements should be coordinated with the yoke improvement to achieve the best match of convergence, focus, spot shape, etcetera. One impact of modifying the electron optics of the CRT is a change in the electron beam landings (registration of the electron spots on the phosphor dots). After the CRT design is stable, A new set of screen artwork should be procured.

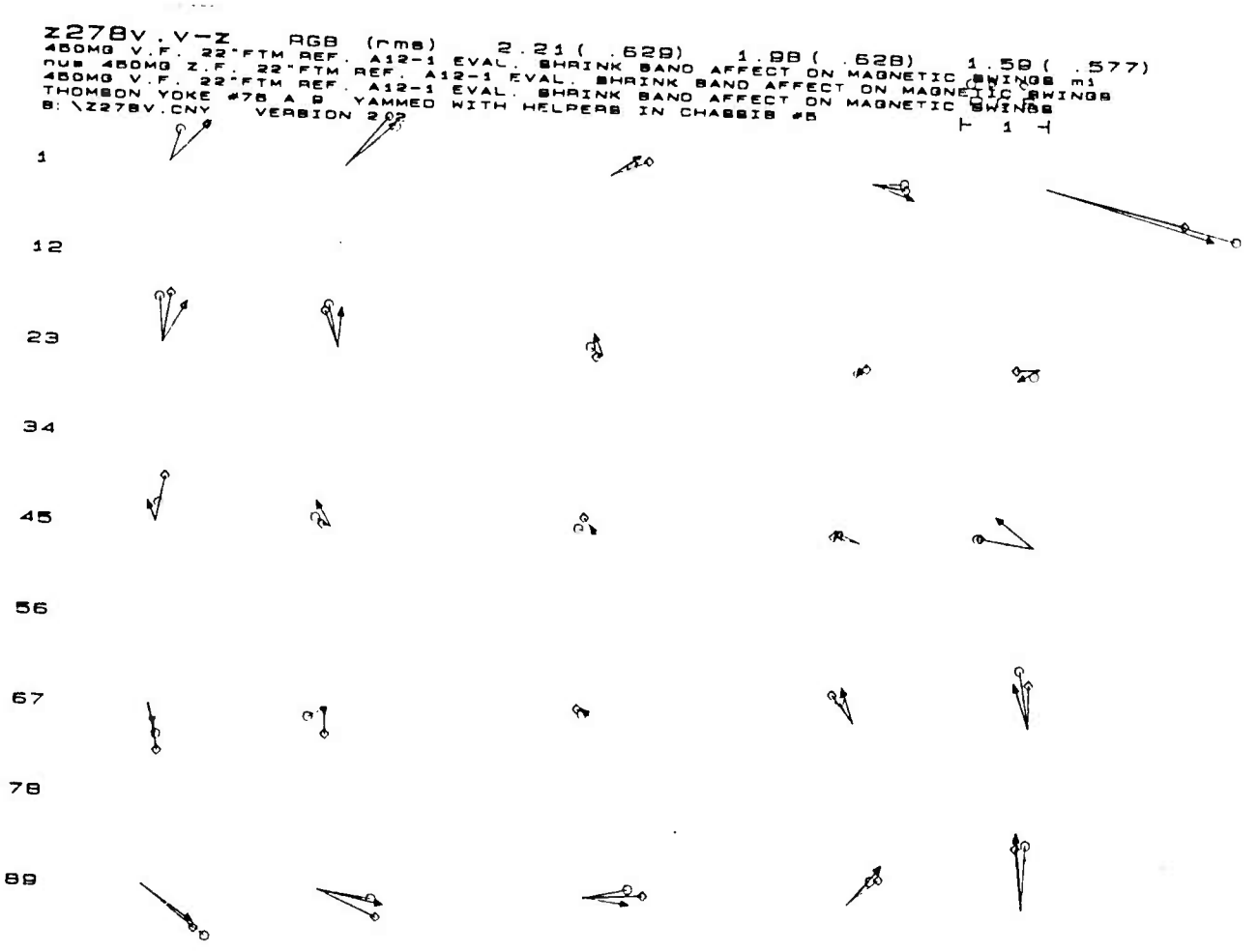

FIGURE 5 - Beam landing shift with vertical magnetic field swing

The performance of the CRT in varying magnetic fields changes with the magnetic field around the tube. The magnetic field in not completely shielded by the commercial quality shield and the beams land at different points on the phosphor screen as the field is changed. The change in beam position for a beam passing through a given aperture in the shadow mask is shown in Figures 5,6 and 7. The legend at the top of the graph gives the magnitude of the shift in beam landing for the individual colors.

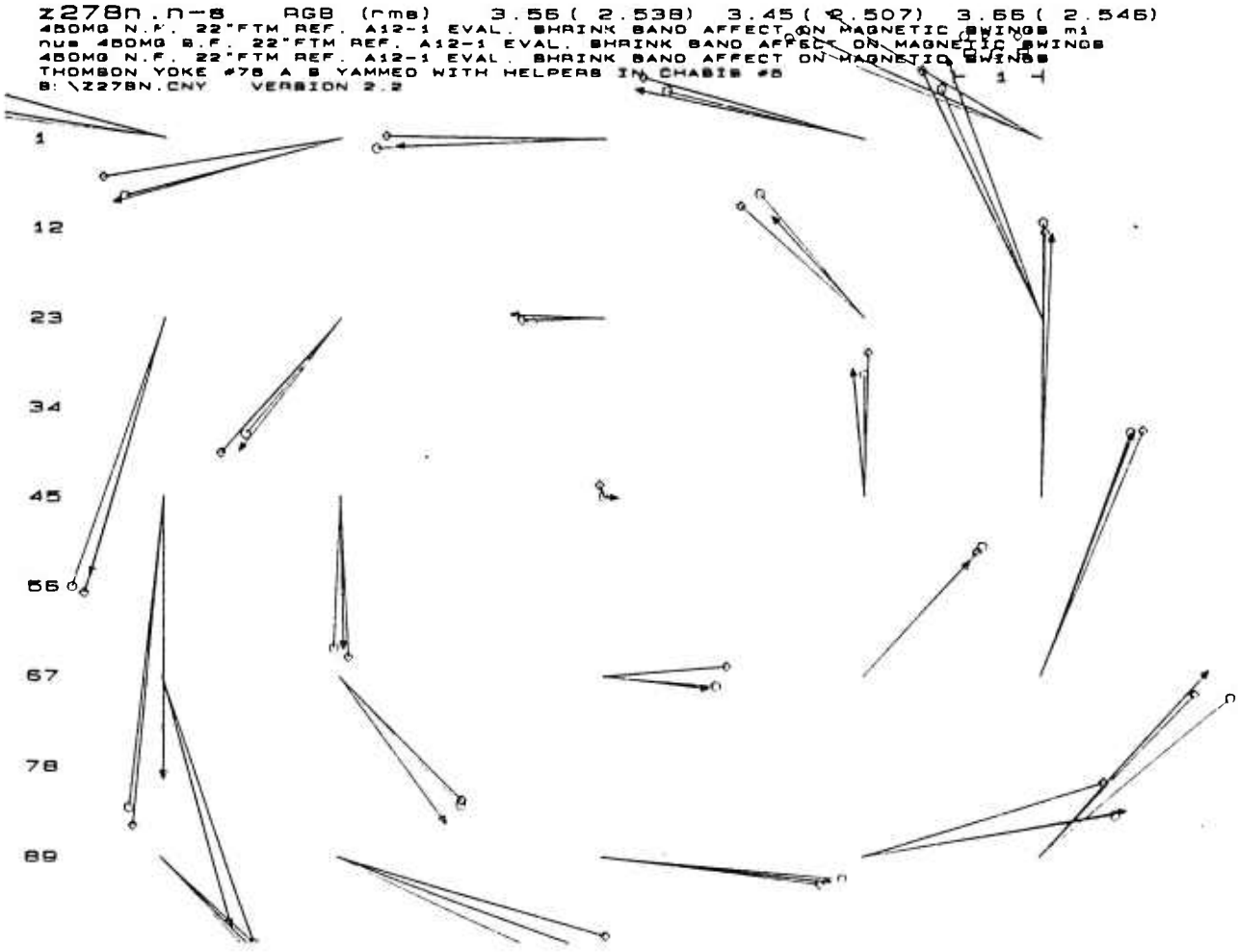

FIGURE 6. Beam landing shift with North to South magnetic swing

The effect of the vertical component of the earth's magnetic field is shown in Figure 5. The maximum magnitude of the shift in the upper right hand corner of the tube is between 1.59 mils for the blue beam and 2.21 mils for the red beam. The magnitude of beam motion as the field is reversed along the tubes axis is labelled as the north-to-south shift as the reversal occurs when the tube is rotated from north facing to south facing. The magnitude of this shift is a total swing between 3.45 mils for the green beam landing to 3.65 mils for the blue beam landing. Finally, a reversal in the maximum left-to-right field is described as the east to west shift. The magnitude of this shift is about 1.3 mils.

This magnitude of these shifts are small enough that a well registered tube will have good purity throughout all of these orientations. However, the current artwork leaves an initial beam landing pattern as shown in Figure 8 and the addition of some of the magnetic effects will cause misland-ing and some color impurity. This will be corrected when the next generation of phosphor print-ing artwork is made. That will occur after the deflection yoke is refined and the electron gun matched to the deflection yoke.

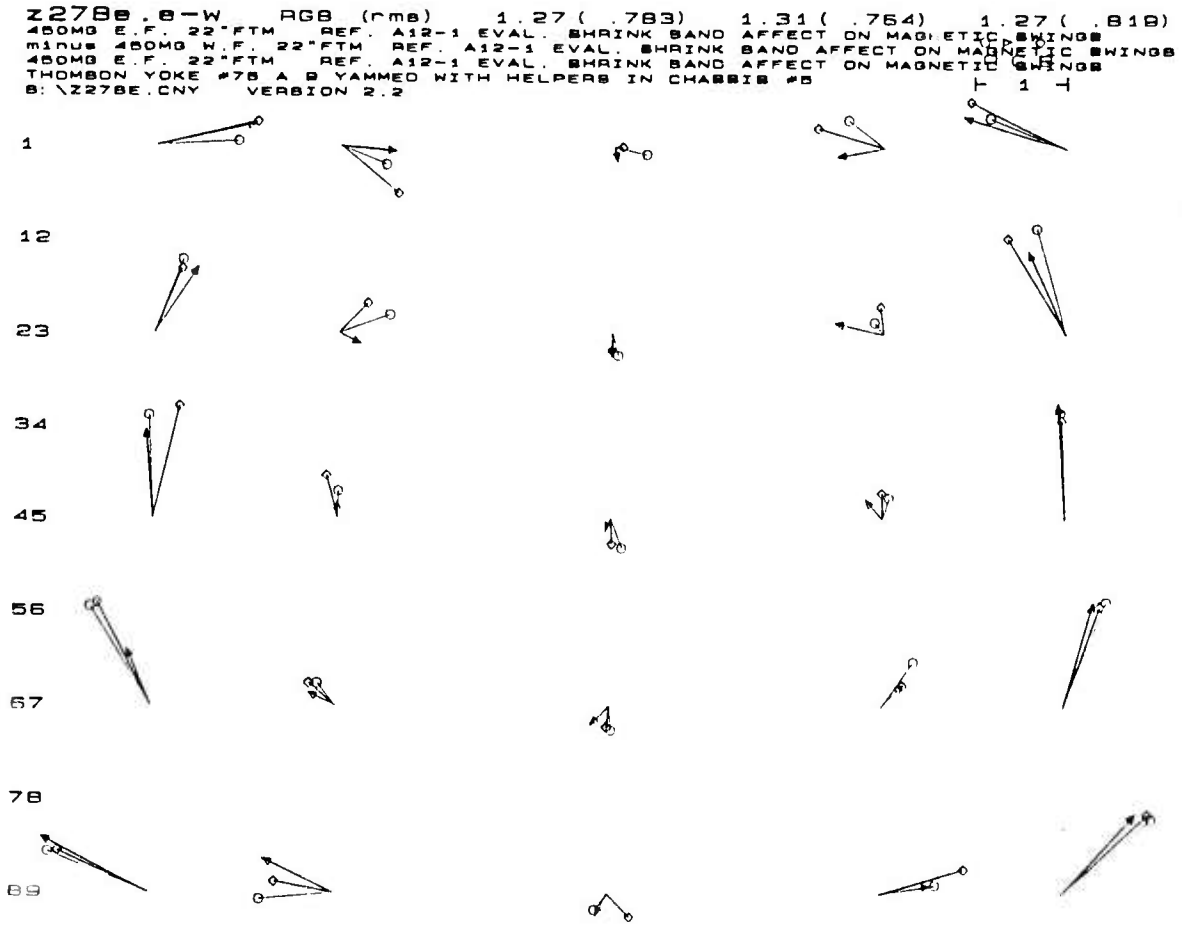

Figure 7. Beam landing shift with East to West magnetic swing

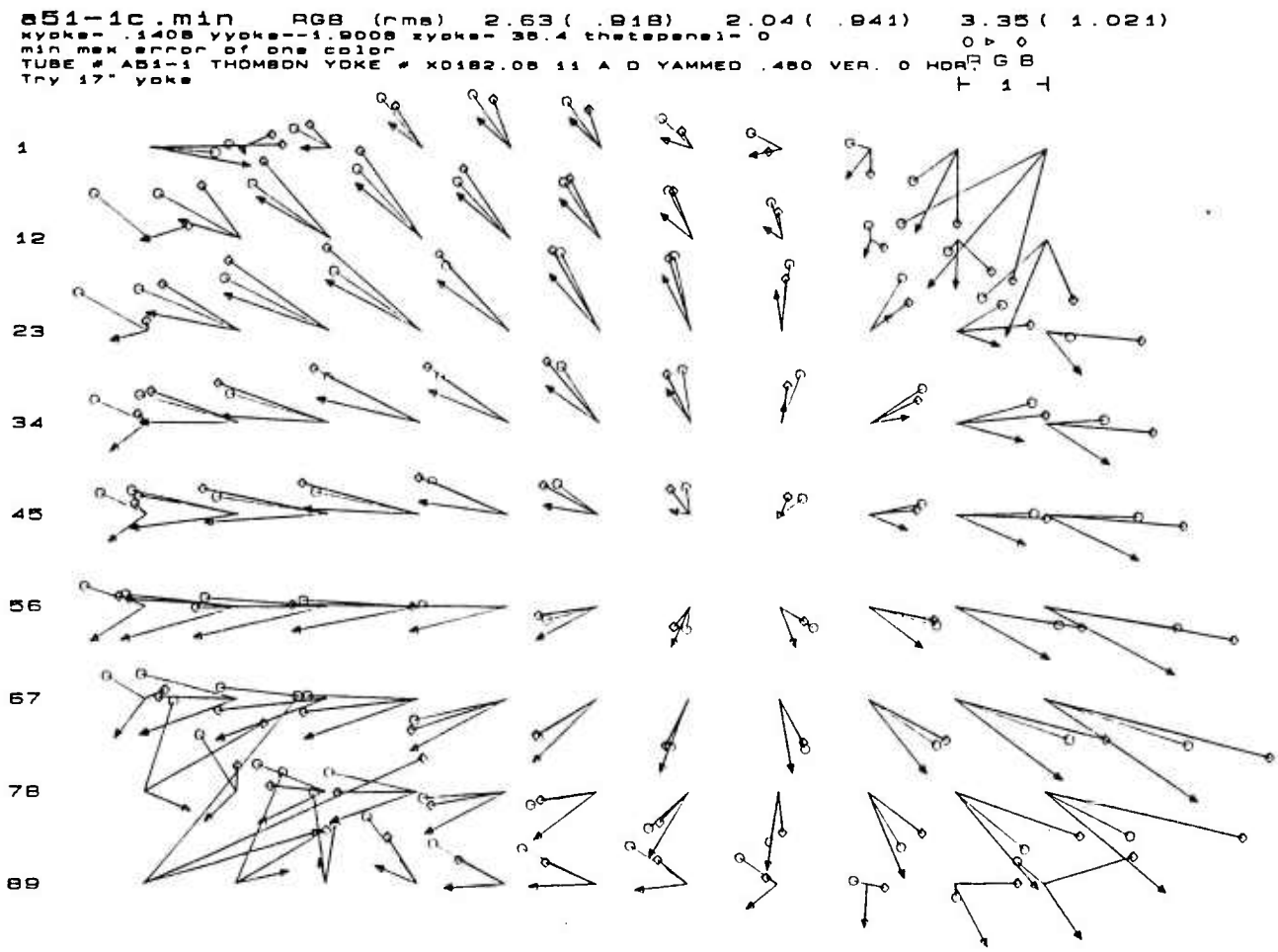

Figure 8. Beam landing errors at nominal setup

SECTION E - IMPORTANT FINDINGS AND CONCLUSIONS

Manufacturing technologies for the 22 inch and larger FTM CRTs have been successfully developed. A nine month product optimization program has been recommended and discussions on commercialization are ongoing. Production of this tube as a dual-use product could begin in late 1994. Although the further developments may change some of the product parameters slightly, a tentative specification for this CRT is included as Appendix 2.

NCCOSC (San Diego, CA) is currently evaluating the commercial grade samples of these FTM CRTs to determine whether any changes would be needed to ruggedize them for military applications. Based on their evaluation, a dual use strategy will be developed.

Although proximity exposure, photolithographic screening was adopted early as the primary program direction, mechanical printing of the phosphor screen was investigated. The accuracy of the conventional offset gravure process used for decorating was improved by a factor of 3, which is adequate for VGA resolution phosphor screen printing.

The technologies employed in this development are all native to the United States. However, it should be noted that offshore suppliers are ahead of US companies in many of the low cost, high volume production applications of these technologies. Therefore, the probable source for the large volume, consumer application manufacturing scenarios will include some offshore sources. This is true in fine grained steel casting and rolling, shadow mask manufacture, large format, 1-micron-feature artwork generation (non-repeating pattern), cathode manufacturing technology, deflection yoke manufacture. These component sectors should be supported as appropriate to complete the US technology infrastructure.

The peripheral components of the ICM CRT system can be improved as indicated and further development should proceed.

SECTION F - SIGNIFICANT HARDWARE DEVELOPMENTS

STRETCH AND WELD MACHINE

The key equipment in this program was the machine to stretch and weld the mask to the panel. This machine has to identify the axes of the panel and determine where the center of the panel is and how it is rotated in space. The machine must then stretch a shadow mask to the correct size and identify where its center and rotation are. The two parts descriptions are combined in the control logic so that the panel can be brought in the correct orientation with the mask.

Then the machine must laser weld the two parts together. The cost of making an adjustable welding path for the laser welders is a one time cost and the cost of precisely locating the mask support rails appeared overwhelming. Therefore, we instituted a system for inspecting the location of the rails during identification of the panel location and orientation of the panel and use this information to correct the laser welding path.

The machine is shown in Figures 9 and 10. The operation is similar to the smaller machine, but the system includes twelve pulling motors instead of just four.

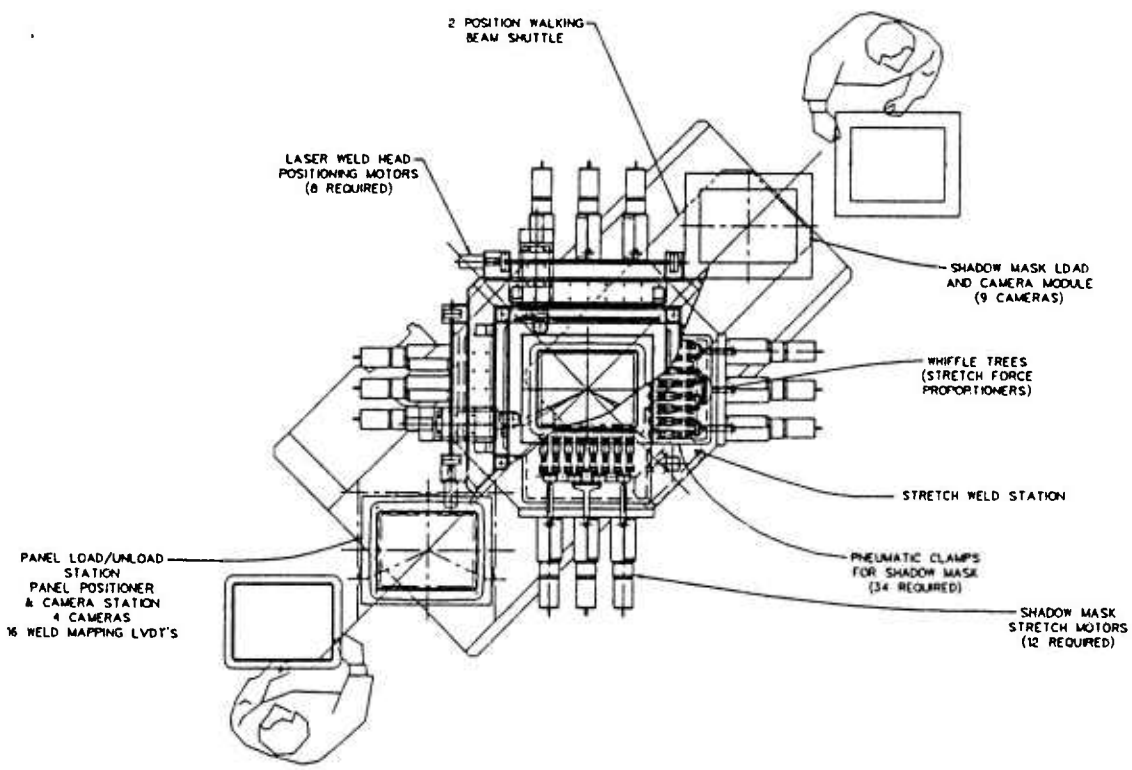

FIGURE 9. Top view of the large format stretch and weld machine

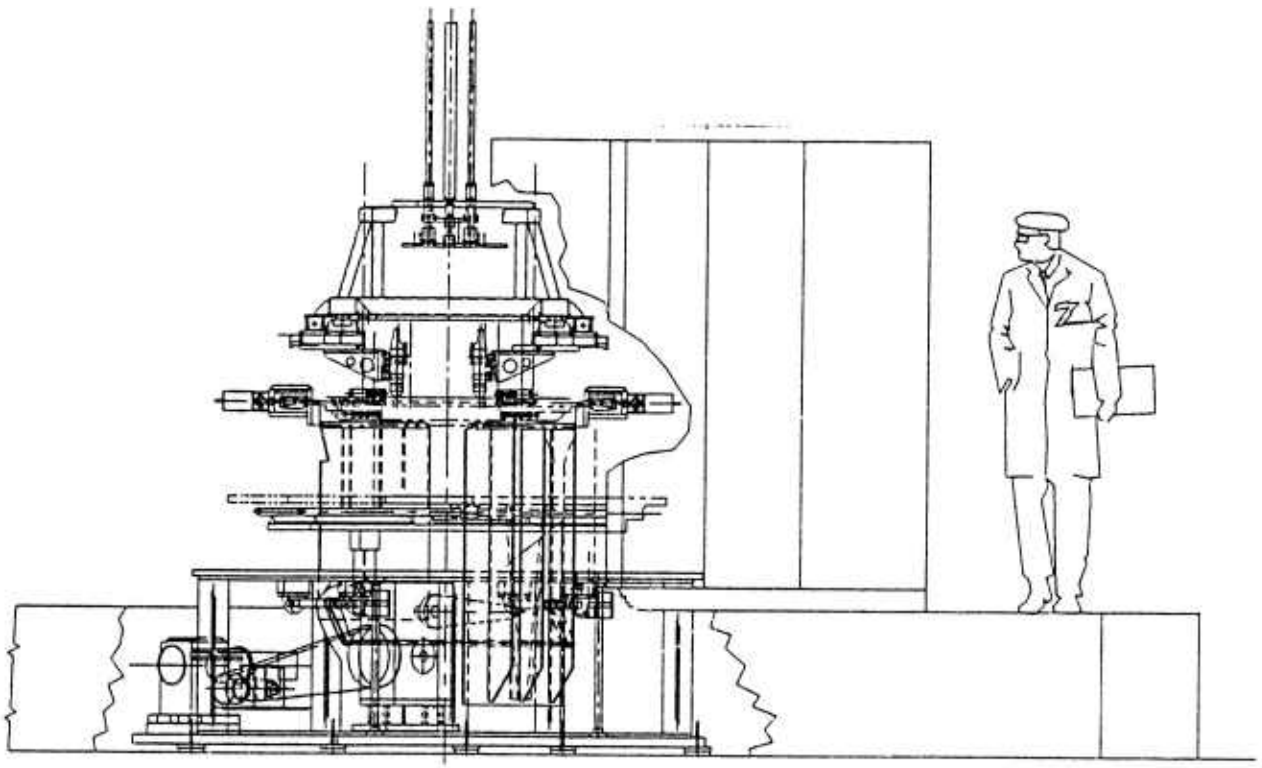

FIGURE 10. Side view of the large format stretch and weld machine

The second key machine is the proximity exposure light house, described on page 13. This equipment is simply a specialized version of a near contact photolithographic printer with the exceptional feature that it deforms the part being printed. That deformation eliminates the necessity to deform the artwork to match the out-of-flatness of the rail support surface on the panel being printed.

Other FTM processing equipment had to be sized for the larger format tube and temporary fixtures and adapters have been built for this program.

SECTION G - SPECIAL COMMENTS

The fact that TI has special laser photoplotter technology which could be applied in the US but is not available to the typical researcher is an opportunity. A TI photoplotter should be placed at the NCAICAM facility in New Mexico an made available to qualified researchers across the country.

SECTION H - IMPLICATIONS FOR FURTHER RESEARCH

The results of this effort have produced the first perfectly flat 22 inch color display. The implications of this must be measured in terms of the evolution of this technology to applications other than the current 4 by 3 aspect ratio video monitor display and to environments other than magnetically benign office space.

Possible applications could include the High Resolution Video terminal being developed by David Sarnoff research Center, Sun Microsystems, DARPA and others. That system requires a 16 by 9 aspect ratio display which may have some implications on the implementation of the FTM technology. A study of the mechanical and operational characteristics of the wider format on the FTM implementation would be desirable.

Possible applications in more hostile magnetic environments may have different influence with the FTM shadow mask and shield configuration than with conventional color display tubes. Evaluation of the FTM consequences is highly desirable.

Since the program was a manufacturing development program and the manufacturing experience has not been developed, there are likely to be manufacturing issue which will arise after production start-up. These can only be dealt with as they are discovered.

APPENDIX 1. ZENITH's FLAT TENSION MASK COLOR DISPLAY CRT

ZENITH'S FLAT TENSION MASK COLOR DISPLAY CRT

INTRODUCTION

Zenith has been producing 15 inch diagonal flat tension mask (FTM) CRTs since 1987 for VGA display applications. We have since developed and are producing 15 and 17 inch high resolution display tubes. We are also currently developing a 22 inch FTM display for workstation applications, samples of which are being produced now.

The following is a description of what an FTM is with some comparisons to the conventional tubes.

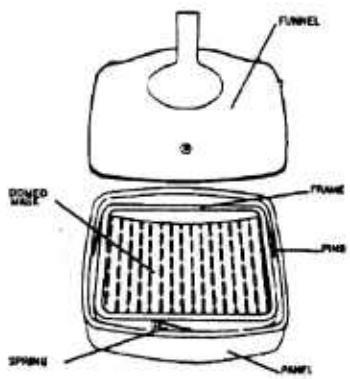

Figure 1.

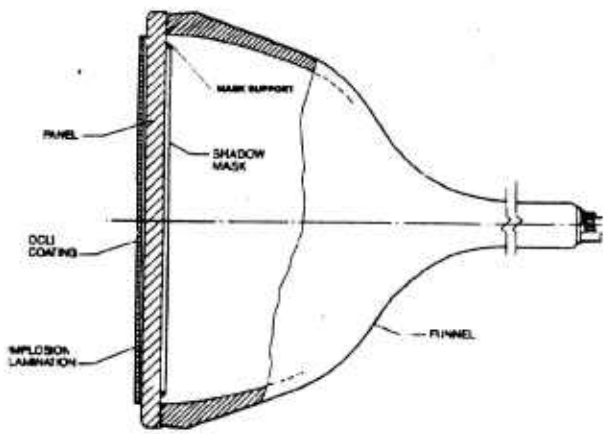

Figure 2.

TUBE DIMENSIONAL TOLERANCES

Figure 1. shows a schematic drawing of a typical spherically- faced CRT. The panel is a press-molded piece of glass with a cross-section as shown, made by dropping a gob of molten glass into a mold and then pressing that gob into shape with a plunger which shapes the contour and forces the glass into the sides of the mold to form the panel skirt. Three or 4 metal mask support pins are inserted into the skirts and then the panel is annealed to reduce forming stresses. Finally, the outside spherical surface of the panel is ground and polished to optical quality.

The inner surface of the spherical panel cannot be mechanically modified after forming due to the presence of the skirts. Any contour control must be accomplished by controlling the plunger shape. Due to the instability of glass at high temperatures, it is necessary to tolerate variations in contour of .012 to .024 inches in smaller sizes and up to .034 mils in larger panels.

The requirement for higher precision in high resolution color display tubes (CDTs) necessitates precise control and after that selection of those parts that meet CDT requirements. The remainder of the ware is used for the less precise TV product or is scrapped.

The conventional shadow mask is annealed and drawn into a spherical, dome shaped contour on a forming press. Although the contour of the forming die is precisely controlled, formed mask contour variations in the order of .014 to 0.030 inches are typical depending on the size of tube. Three or 4 leaf springs are welded to a support frame, and then the domed mask is welded to that frame to complete the shadow mask assembly. This mask assembly is then supported in the faceplate by engaging holes in the leaf springs onto the pins in the faceplate.

Figure 2. shows a schematic cross-section of an FTM CRT. The FTM faceplate is manufactured by the float glass process. A continuous ribbon of molten glass is spread out over a layer of liquid tin where it becomes almost perfectly flat. As the ribbon cools it is lifted off the tin and passed through an annealing and cutting line. Large sheets of glass are shipped to a finisher who cuts the sheets of glass to the desired size and shape.

The inner surface of the FTM panel, by virtue of this float glass process is flat to a tolerance of less than .004 inches. An antiglare finish which is mechanically lapped into the inner surface of the faceplate further improves the flatness of the faceplate.

Instead of mask mounting pins, we bond a mask support frame directly to the panel. This support frame is a ceramic filled metal structure, which is bonded to the panel with pyro-ceram cement (frit). After bonding, the height of this support structure is precisely ground to the required mask-to-screen

spacing. To provide a means to register the panel with the shadow mask in subsequent operations, 3 reusable registry balls are temporarily bonded to the edges of the panel.

The FTM shadow masks are stress relieved at a relatively low temperature to provide mechanical stability in subsequent heating processes and then inserted into a temporary mask stretch frame which supports the mask under its final tension through the screening processes to be described below.

The insertion process involves heating the mask between two platens to a temperature of about 350°. The edges of the mask are then clamped into an auxiliary stretch frame. Upon cooling, the hot, clamped mask shrinks and goes into tension.

The final FTM mask/panel assembly has a mask-to-screen spacing variation of .004 inches compared to a conventional assembly variation of up to .026 inches. This improved precision can be utilized to give greater purity latitude or increased brightness.

MASK THICKNESS

The conventional shadow masks, in order to hold their shape must be thick enough to support the rigors of normal shipping and handling, typically .005 to 0.006 inches in smaller sizes and .010 to .012 inches in 27 to 31 inch sizes. The etched holes are about the same diameter as the thickness of the material which creates the need for special etching techniques to get the required uniformity in hole size over the entire area of the mask.

For higher resolution displays, the holes are closer together and the hole diameter is reduced to much less than the material thickness. As a result the manufacturing yields decrease and costs increase essentially as the inverse square of the hole-to- hole spacing(pitch). Although it is possible to etch 0.2mm pitch conventional shadow masks, the industry has backed off to .25mm as the minimum cost effective pitch for production designs.

In the case of the FTM, a very thin tension mask is required to reduce mechanical loading on the integrated structure. The current structure is capable of withstanding a load of about 45 lbs. per linear inch. Cold rolled steel of about .001 inches thick is the thinnest cost effective material available today. Stretching this material to about 30,000 psi. gives a loading of

about 30 lbs. per linear inch on the support. Since cold rolled steel has a higher coefficient of thermal expansion than the tube glass, if the tube is subjected to very low temperatures, the mask tension will increase since the mask shrinks more than the glass. Limiting tension to the 30,000 psi level guarantees that the support system will not be overstressed at those temperatures, and the 75,000 psi. yield strength of the mask will not be approached.

At this thickness, the hole size of the highest resolution CDT ever contemplated is still larger than the material thickness. Therefore, the production of higher resolution shadow asks for FTM CDTs is highly feasible and essentially no more costly than current masks.

MASK SUSPENSION

In a conventional color CRT the shadow mask is welded to a heavy support frame which is suspended on three or four pins in the side of the faceplate by means of leaf springs. The shadow mask must be annealed to be able to form it into its spherical shape, which means it is in essentially the dead soft state. As a result, in applications where the tube may be subjected to severe shock, the domed mask can actually collapse and permanently deform, the springs can bend, or in extreme cases, the pins can be broken out of the glass. In severe vibration, the spring to pin contact can wear resulting in mis-registration between the shadow mask apertures and the dots. In any case these arduous applications can induce degradation of color purity sufficient to render the CRTs unusable.

Due to the inherently thinner shadow mask, the integrated mask support system, and the high tensile strength of the mask, the FTM CRT is essentially immune to the types of shock and vibration which would destroy a conventional tube. It is obvious that the FTM tube will withstand the same g-forces as a monochrome display tube while providing the advantage of color information.

MASK MOVEMENT

All color display cathode ray tubes (CDTs) contain a metal color selection electrode(shadow mask) which in a 13 to 14 inch size has about .8 to 0.9 million holes etched in a hexagonal lose- packed arrangement. Each mask hole has a corresponding trio of red, green, and blue phosphor dots on the inside surface

of the faceplate. Due to parallax, the red, green, and blue electron beams under normal operation will strike only their corresponding phosphor dots. However, conventional curved faced CDTs must incorporate a correspondingly curved shadow mask to maintain the parallax relationship at all points in the display area. Heating of the metal mask due to absorption of the electron beam power in its solid portion causes expansion of the mask. Because the mask is not under tension and due to its curvature, the mask moves closer to the faceplate and at points away from the center of the display, the individual color beams begin to strike their neighbors, destroying the color separation. This effect is termed doming.

The diameters of the phosphor dots and shadow mask apertures are selected to provide some tolerance (guard-band) for mask movement before color separation (purity) is lost. Unfortunately, increased guard-band means making the dots and apertures smaller which reduces brightness. The beam power, hence the brightness must be limited to keep the mask movement within the allowable limits. The faceplate light transmission is also kept high to get the required brightness, at the expense of contrast.

The FTM CDT has a perfectly flat faceplate and correspondingly flat shadow mask. The mask is welded in tension to a support system bonded to the faceplate. When this mask absorbs beam power, the expansion due to warming of the mask reduces tension in the mask, but the mask holes do not move and purity is maintained until the point at which all tension is lost.

This loss in tension occurs at considerably higher beam currents than a conventional tube can support before purity loss is obvious. Typically a 14 inch FTM will take 8 times the beam current of a conventional tube for full screen area illumination, and up to 15 times for small bright areas before purity loss is observed.

BRIGHTNESS, CONTRAST, GLARE-REDUCTION, AND OTHER BENEFITS

Brightness and Contrast Advantages.

The brightness advantages of the FTM in larger sizes and finer resolution designs can be utilized in different ways.

We have used the increased brightness and power handling capability to enhance the contrast performance of the 14 inch FTM display. By reducing the transmission of the faceplate, from the lowest curved product of 46%, to 30% we have produced a display with a black background in bright ambient conditions. In bright, sunlit rooms, the 14 inch FTM display outshines conventional curved face displays in side-by-side comparisons both in brightness, contrast, and color rendition. In fact, the FTM still displays a usable picture in lighting conditions that make conventional products appear to be turned off.

The electron beam spot size decreases with decreasing beam current. By operating the FTM tube at the same faceplate transmission and the same brightness (lower beam current) as a conventional tube, the beam spot size will be smaller. The FTM display will be sharper in comparison to the conventional tube.

The FTM incorporates a resin bonded safety window to meet implosion protection requirements. We can vary the reflectivity of the screen by changing the transmission of the safety window. Thus the contrast performance of the tube can be adjusted for specific user environments from darkened rooms to sunlit areas.

Reflection and Anti-Glare.

The 14 inch FTM display tube utilizes a multi-layer, anti-reflection coating on the front surface of the bonded implosion protection window. Since the face is perfectly flat, our vendor uses high volume automated equipment that continuously coats large sheets of glass, which are then cut to size for the FTM. In conventional curved face tubes, the glass must be first cut to size, then heated to the softening point and bent into a curved shape. It is then manually loaded into a batch coating machine for application of the multiple layers. The anti-reflective surface on the FTM costs less than 1/3 of the cost of the same on conventional product.

After reflections from the front surface are all but eliminated with the anti- reflection coating, there still exists a reflection from the inner surface of the faceplate that is just as annoying. This inner surface reflection can be eliminated by roughening that surface. On conventional product, the sides of the faceplate interfere with any mechanical roughening process and therefore the only method available is to etch the surface with strong, environmentally hazardous acids. The handling and

disposal of these chemicals cause this process to be very expensive. Since the FTM has no sides, a simple, fine-grit mechanical grind is used to roughen the inner surface enough to reduce the reflection.

The multilayer anti-reflection coating on the front surface of the display coupled with the inside antiglare treatment results in a glare free picture that appears to be printed on a black velvet background.

Add-on sunscreens or glare shields that are commonly used to enhance the contrast and reduce glare on conventional displays are totally unnecessary with the FTM CDT. Even without the anti-reflection and antiglare treatments, the flat face minimizes extraneous reflections. The display can be oriented such that reflections are directed out of the view of the user.

Touch Applications

In touch data input applications where beams of infrared light are used to detect where the screen is being touched, the FTM due to its absence of sagital height, permits the beams to be much closer to the tube face thus reducing input errors due to parallax.

TODAY'S FTM MANUFACTURING PROCESS

Panel Process.

The panel preparation process involves assembly of the faceplate and mask support structure by a frit sealing process. The mask support is subsequently ground to the desired height in a Blanchard type grinder. Application of the 3 registry balls by an Ultraviolet curing, resin bonding process completes the assembly process. FTM shadow masks are stress relieved at a relatively low temperature to provide mechanical stability in subsequent heating processes and then inserted into a temporary mask stretch frame which supports the mask under its final tension through subsequent operations by the process described above. After insertion into the stretch frame, the mask is ultrasonically washed and dried to remove dirt particles which would block the apertures in the mask causing finished tube defects for missing dots.

The temporary registry balls on the FTM panel mate with grooves at the periphery of the temporary mask support frame to kinematically register the tensed mask with the panel.

Screen Application Process.

Currently the FTM screening process is done by the same photolithographic process used in conventional tube processes.

Final Assembly.

The panel is then inserted into a laser welding machine, the mask assembly is registered to the panel, and the mask is laser welded to the support frame which was previously bonded to the panel. The laser then cuts the mask from the stretch frame and after removing the registry balls, the welded mask/panel assembly is frit sealed to a funnel the same as conventional product. The stretch frame and registry balls are then recycled.

The tube is then finished conventionally, except for the laminated implosion protection system.

DEVELOPMENT OF THE INTERCHANGEABLE MASK SYSTEM

Shadow masks are made by a chemical etching technique. A master pattern of holes or stripes is generated on a photographic, silver-emulsion-coated glass plate. This plate is then used to generate multiple secondary printing plates to be used on the production line. A continuous strip of steel is coated with photo-resist and dried, and then run through a series of contact exposure frames which contain the secondary printing plates. The aperture pattern is printed on both sides of the strip. Obviously, to be able to print the same pattern on both sides of the strip, the glass masters must be perfectly identical. After exposure, the photoresist is developed, hardened, and then the strip is run through a ferric chloride etchant and etched from both sides.

After stripping the hardened photoresist, and cutting the finished shadow masks from the strip, each mask is an exact replica of the printing plates used for exposure. Since the plates are all exact replicas of the original master pattern, each mask is an exact replica of every other. The only factors which might cause the masks to deviate from being identical is that the temperature of the strip or the temperature of the glass

exposure plates might vary from time to time causing some radial error in the pattern. By stretching the masks uniformly, to fixed pattern references these temperature deviations can be compensated for by stretching more or less. Better temperature control of the strip and plates during exposure will also insure the sameness (interchangeability) of the masks.

We have proved that this interchangeability can be achieved with the FTM system. A production worthy machine has been built and is in the process of being tested which can:

1) reliably pre-align and clamp the edges of the mask without causing uncorrectable distortion;

2) stretch the mask to a predetermined pattern;

3) position a black matrix faceplate assembly in correspondence to the mask position; and

4) finally weld the mask to the mask support structure, and cut away the excess mask material.

We have produced several 22 inch diagonal FTMs, using a 0.26mm. pitch shadow mask on this equipment. The variation in registry is well within the purity guardband available.

Near Contact Screening Process.

The interchangeablility of the shadow mask stretch and weld equipment permits us to use photomasters for black matrix and phosphor screen application.

Instead of producing exposure correction lenses for screen exposure, glass photomasters are direct plotted with the proper red, green, and blue aperture locations to correspond exactly with the electron beam landings. The hole patterns on the glass masters are placed such that the masters can be positioned in close proximity to the faceplate surface as opposed to the normal mask-to-screen spacing used in conventional exposure. We could actually use contact printing masters, but are worried about damage to the masters by touching the faceplate.

This near contact exposure process eliminates the problems currently experienced with the conventional process namely;

1) lint on the master produces a very small defect as opposed to dirt in a mask aperture causing a missing triad,

2) phosphor dot size is independent of exposure time which all but eliminates phosphor adhesion problems,

3) black matrix and phosphor dot size is independent of light source diameter, permitting large sources for short exposure times.

APPENDIX 2. PRELIMINARY DATA SHEET FOR THE 22 INCH CRT

COLOR DISPLAY TUBE

RAULAND HIGH RESOLUTION 22" F.T.M.

PRELIMINARY

DATA SHEET

- ▸ PERFECTLY FLAT FACE - FINE PITCH BLACK MATRIX DOT TRIO SCREEN
- ▸ ZENITH FLAT TENSION MASK - FRAMELESS - TENSIONED
- ▸ 62% TRANSMISSION FACE SYSTEM FOR HIGH CONTRAST WITH ANTI-REFLECTION AND ANTI-STATIC COATING
- ▸ IMPROVED DYNAMIC QUADRUPOLE HIGH RESOLUTION ELECTRON GUN WITH LONG LIFE CATHODES
- ▸ NECK COMPONENTS OPTIMALLY ADJUSTED - PERMANENTLY ATTACHED
- ▸ HIGH RESOLUTION INTEGRAL TOP/BOTTOM PINCUSHION CORRECTED YOKE
- ▸ DYNAMICALLY SELF CONVERGING WITH VLF AND ELMF SUPPRESSION
- ▸ INTEGRAL EXTERNAL MAGNETIC SHIELD WITH GROUNDING TABS
- ▸ IMPLOSION PROTECTION - INTEGRAL PROTECTIVE WINDOW WITH A METAL SHRINK BAND AND MOUNTING EARS

The High Resolution 22" color cathode ray tube is designed for use in high resolution monitor or display systems. It features a perfectly flat screen face and a Zenith Flat Tension Mask with fine pitch apertures. The phosphor screen is a fine pitch, black matrix, dot trio with a 62% transmission face system (tube face panel and integral protective window with anti-reflective and anti-static coating) for a bright and high contrast display. It uses the dynamic quadrupole bi-potential focus high resolution electron gun. This, with a high resolution Saddle-Saddle top/bottom pincushion corrected yoke, provides a self-converging deflection system. The neck components are optimally adjusted and permanently attached requiring no customer adjustments. The integral external magnetic shield provides improved shielding from the earth's magnetic field. However, it is recommended that this tube be used with North/South field cancellation coil and detection circuit. The implosion protection system uses an integral protective window with optical anti-reflective and anti-static coating and a metal shrink band. The metal shrink band, external magnetic shield and external dag coating are electrically common.

SPECIFICATIONS

ELECTRICAL DATA

Heater Current @ 6.3V ..... 750 mA
Focusing Method ..... Electrostatic
Focusing Lens ..... Dynamic Quadrupole Hi-Bi Potential
Convergence Method ..... Magnetic
Deflection Angle:
- Diagonal ..... 90°
- Horizontal ..... 77°
- Vertical ..... 52°

Capacitance- External Conductive Coating/Shield to anode ..... 2400pF ±T.B.D.
Direct Interelectrode Capacitance (approx.)
- Grid #1 to all other electrodes 14.3pF
- Grid #3 to all other electrodes 5pF
- Blue, Red, or Green Cathodes to all Other Electrodes 5pF

Deflection Yoke ..... 10RC-T.B.D.
Integral Magnetic Shield ..... yes

OPTICAL DATA

Light Transmission of Faceplate (including integral protective window) 62%
Viewing Surface ..... Anti-reflective and anti-static treated
Phosphor XX

Screen Structure ... Dot Trio with Black Matrix and Negative Guard Band
Spacings Centers of Adjacent Dot Trios (variable Pitch) 0.255mm

MECHANICAL DATA

Tube Dimensions:
- Overall Length ..... 486.71 ± 5.08mm
- Neck Length ..... 181.71 ± 3.18mm
- Neck Diameter ..... 29.11 ± 0.79mm

Useful Screen Dimensions (nominal):
- Diagonal 548.64mm
- Horizontal Axis 438.91mm
- Vertical Axis 329.18mm

Bulb:
- Funnel (EIA Designation) ..... T. B. D.
- Panel (EIA Designation) ..... T. B. D.

Implosion Protection .. Bonded Flat Window W/ Shrink Band
Base (EIA Designation) B10-301
Basing (EIA Designation) ..... No. AX
Anode Contact (EIA Designation) J1-21
Gun Configuration ..... Horizontal Inline
Pin Position Alignment ..... Spacer Separating Pins 9 & 10 Aligns Approx. w/Anode Bulb Contact
Operating Position ..... Anode Contact at Top
Weight ..... Approx. 23.6 Kg

RAULAND DIV. ZENITH ELECTRONICS/ 2407 W. NORTH AVE. / MELROSE PARK, IL. 60160 (708) 345-4700
JANUARY 7, 1993

MAXIMUM AND MINIMUM RATINGS. ABSOLUTE MAXIMUM VALUE

WARNING: ABSOLUTE-MAXIMUM RATINGS ARE SPECIFIED FOR RELIABILITY AND PERFORMANCE PURPOSES. X-RADIATION CHARACTERISTICS SHOULD ALSO BE TAKEN INTO CONSIDERATION IN THE APPLICATION OF THIS TUBE TYPE.

NOTE

Unless otherwise specified, values are for each gun and voltages are positive with respect to Grid #1.

Anode Voltage: **Absolute max.** ..... T.B.D.V
Absolute min. ..... T.B.D.V

Anode Current: **Absolute max.** **2.0mA**
(Long Term-Average)
Focusing Electrode Voltage..... **12.0kVmax.**
Grid #3
Peak Grid #2 Voltage..... 1200V
Cathode Voltage:
Positive Bias Value..... ..... **400V max.**
Positive Cut-Off..... **200V max.**
Negative Bias Value..... **0V max.**
Negative Peak Value..... **2V max.**
Heater Voltage (AC or DC)..... **6.9V max.**
..... **5.7V min.**
Heater-Cathode Voltage:
Heater Negative with respect to Cathode:
During equipment warm-up period, not exceeding 15 seconds..... **450V max.**
After equipment warm-up period, DC component value..... ..... **200V max.**
Peak value..... **200V max.**
Heater Positive with respect to Cathode:
DC component value..... **0V max.**
Peak value..... **200V max.**

EQUIPMENT DESIGN RANGE

NOTE

Unless otherwise specified, values are for each gun, and voltage values are positive with respect to Grid #1.

For anode voltage of 28kV
Focusing Electrode Voltage..... **Grid #3**
F1 Voltage..... **24-29% of Anode Voltage**
F2 Voltage..... **25-30% of Anode Voltage**
(See Fig.6 for suggested focus divider)
Control Voltage for Visual Cut-off of Focused Line:
See Fig. 1, Cut-off Design Chart
Maximum ratio of Cathode Voltages in any tube Highest to Lowest Gun, Cathode adjusted for Line Cut-off..... 1.25
Grid #3 Current..... ± 10μA
Grid #2 Current ..... ± 5μA
Cathode Drive Curves..... **See Fig. 2**

For White Light Output Having CIE Coordinates:

X 0.313
Y 0.329

Percentage of Total Anode Current:
Red Beam ..... **36.5 (average)**
Blue Beam ..... **24.5 (average)**
Green Beam ..... **39.0 (average)**
Ratio of Cathode Currents:
Red/Blue
Minimum..... 1.19
Typical 1.49
Maximum 1.75
Red/Green
Minimum 0.74
Typical 0.93
Maximum 1.11
Blue/Green
Minimum 0.54
Typical 0.63
Maximum 0.71

CIE Coordinates of Color Fields Produced by each Phosphor
Red .... x -0.616 y - 0.336
Blue..... x -0.146 y -0.066
Green..... .. x -0.282 y -0.595

Persistence*
Red..... **0.47 m sec**
Blue..... **40 μ sec**
Green..... **41 μ sec**
*Time of decay to 10% of peak brightness after excitation is removed.

TYPICAL OPERATING CONDITIONS

Anode Voltage..... **28,000V**
Cathode Voltage..... **+120V**
G1 Grid..... **0V**
G2 Grid..... **770V @ 120 VCO**

Focus Voltages Typical
DynamicFocussing.**VertcalParabola=(T.B.D.)VPeak to Peak**
Horizontal Parabola=(T.B.D.)VPeak to Peak
The Focus Circuitry should provide two Focus Voltages: One for the Fixed Focus Voltage (F1) and the other for the dynamic Focus Voltage (F2) horizontal and vertical wave forms.

The Dynamic Voltage creates both the Dynamic Focusing and Dynamic Quadrupole (Astigmatism) effects; which improves the spot size uniformity over the whole screen.

Typical Cathode Drive for 300 μA Screen Current @ 120V
Cutoff..... **45V**
Raster Geometry Distortion, due to the tubes Flat Face will result unless Pincushion Correcting Circuitry is provided to drive the CRT.

RAULAND DIV. ZENITH ELECTRONICS/ 2407 W. NORTH AVE. / MELROSE PARK, IL. 60160 (708) 345-4700
JANUARY 7, 1983

X-RADIATION CHARACTERISTICS

Measured in accordance with the procedure of EIA standard RS-503 (formerly TEPAC Publication #164). A picture tube should not be operated beyond its Absolute-Maximum Ratings (such operation may shorten tube life or have other permanent adverse effects on its performance).

The x-radiation emitted from this picture tube will not exceed 0.5 mR/h for anode voltage and current combinations given by the isoexposure limit curves as shown in Fig 3. Operation above the values shown by the curves, may result in failure of the television receiver to comply with the Federal Performance Standard for Television Receivers, Part 1020 of Title 21, Code of Federal Regulations, Chapter 1, Sub-chapter J. Maximum x-radiation as a function of anode voltage at 300 uA anode current is shown by the curves in Fig 4. X-radiation at a constant anode voltage varies linearly with anode current.

From these curves maximum anode voltage at which the x-radiation emitted will not exceed 0.5 mR/h at an anode current of 300 uA.

For entire tube..... *(T.B.D.) kV

For tube face only..... (T.B.D.) kV

WARNING: If the value for the tube face only is used as design criteria, adequate shielding must be provided in the receiver for the anode contact and/or certain portions of the tube funnel and panel skirt to insure that the x-radiation from the receiver is attenuated to a value equal to or lower than that specified for the face of the tube.

Maximum voltage difference between anode and focus electrode at which the x-radiation emitted will not exceed 0.5 mR/h...(T.B.D.) kV

WARNING: If the voltage shown above can be exceeded in the receiver, additional attenuation of the x-radiation through the tube neck may be required.

* This rating applies only if the anode connector used by the set manufacturer provides the necessary attenuation to reduce the x-radiation from the anode contact by a factor to the difference between the anode button isoexposure limit curve (Fig. 3) and the isoexposure-rate limit curve for the entire tube.

SAFETY CONSIDERATIONS

ARC PROTECTION

Maximum product reliability, with any color picture tube, is obtained by the use of spark gaps with the proper grounding, series isolation resistors, and good printed circuit board layouts. Spark gaps to ground should be connected to all socket contacts except as noted below for heater circuits. The ground points for the focus-electrode spark gap and the low voltage spark gaps should be connected with a heavy non-inductive strap to a good grounding contact on the picture tube external conductive coating. The focus electrode spark gap should be designed to break-down at a dc value of approximately 1.5 times the maximum design voltage of the focus circuit. The low voltage spark gap should be designed for a dc breakdown voltage of 1.5 to 3.0 kV. The high voltage circuit chassis ground point should be connected to the low voltage spark gap ground at the picture tube socket. It is recommended that no other connections be made between the picture tube external coating and the grounds to the main chassis or the spark gaps. This will minimize circulating currents in the chassis during high voltage discharge.

Isolation resistors should be used in series with each grid and cathode lead. The resistance values should be as high as possible without degrading circuit performance. These resistors should be capable of withstanding an instantaneous application of 12 kV for the low-voltage circuits and 20 kV for the focus circuit without arcing over, arcing through the body, or changing in resistance significantly during repeated applications of these voltage. Most half-watt carbon composition resistors are suitable for the low voltage circuit and most one-watt carbon composition resistors are suitable for the focus circuit. Use of these resistors reduces the possibility of circulating currents in the chassis and excessive currents in the picture-tube elements.

For best reliability, the heater circuit should be isolated from chassis ground and/or voltage sources by a minimum resistance of 10 kΩ. Spark gaps should be connected to both heater socket contacts. These spark gaps should have the same characteristics as the other low voltage spark gaps. When the heater voltage is supplied from an isolated source, such as the horizontal deflection circuit or other high frequency pulse source, a capacitor may be required between one side of the heater and ground to eliminate undesirable interference on the picture tube screen. If a capacitance value in excess of 0.01 μF is required, the spark gaps to the heater leads should not be used.

Very reliable performance can also be obtained with non-isolated heater circuits. In these cases, only the high side of the heater circuit needs a spark gap. However, printed circuit board and socket designs which inherently provide spark gaps for both heater leads are also satisfactory.

TUBE CLEANING

Care should be exercised in cleaning the tube. Do not use moistening or cleaning agents to clean the funnel; wipe only with a dry lint free cloth. Cleaning solutions (including water) may destroy the protective insulating coating that surrounds the anode contact, as well as attack the external conductive coating. A mild cleaning solution may be used with a soft cloth to clean the face. Do not use abrasive cleaners or cleaners containing wax or polish as these will affect the performance of the anti-reflective coating.

RAULAND DIV. ZENITH ELECTRONICS/ 2407 W. NORTH AVE. / MELROSE PARK, IL. 60160 (708) 345-4700
JANUARY 7, 1993

WARNINGS

X-RADIATION
This picture tube employs integral x-radiation shielding. Replace with a tube of the same type number or Rauland recommended replacement for continued safety. Operation of this tube at abnormal conditions which exceed the 0.5mR/h Isoexposure Limit Curve for the tube (Fig. 3) may produce x-rays. This may be a health hazard on prolonged exposure at close range unless external shielding is provided.

IMPLOSION PROTECTION
This picture tube employs integral implosion protection. Replace with a tube of the same type number or Rauland recommended replacement for continued safety.

SHOCK HAZARD
The high voltage at which the tube is operated may be dangerous.

Design of the TV receiver should include safeguards to prevent user from coming into contact with the high voltage. Extreme care should be taken in the servicing or adjustment of any high voltage circuit.

Caution must be exercised during the replacement or servicing of the picture tube since a residual electric charge may be contained ion the high voltage capacitor formed by the external and internal coatings of the picture tube funnel. To remove any undesirable charges from the picture tube, "bleed off" the charge by shorting the anode contact button located in the funnel of the picture tube to the external conductive coating before handling the tube. Discharging the high voltage to isolated metal parts such as cabinet and control brackets may produce a shock hazard.

TUBE MOUNTING
The tube mounting system should not place mechanical stress on or cause abrasion of the tube, particularly in the area of face panel to funnel seal. If the tube mounting system and/or other metal hardware are accessible to the viewer, it is recommended that it is connected to the receiver chassis. If the chassis is not at ground potential, the connection should be made through a 1M ohm current-limiting resistor. The TV receiver mounting system should incorporate sufficient cushioning that with normal conditions of shipment and handling, the impact force applied to the picture tube does not exceed 35g's.

TUBE HANDLING
Picture tubes should be kept in the shipping box or similar container until just prior to installation. Wear heavy protective clothing including gloves and safety goggles with side shields to prevent possible injury from flying glass in the event a tube breaks in the areas containing unpacked and unprotected tubes. handle the picture tube with extreme care. Do not strike, scratch, or subject the tube to more than moderate pressure. Particular care should be taken to prevent damage to the seal area.

IT IS THE SOLE RESPONSIBILITY OF THE MANUFACTURER OF TELEVISION RECEIVERS AND OTHER EQUIPMENT UTILIZING THE COLOR PICTURE TUBE TO PROVIDE PROTECTIVE CIRCUITRY AND DESIGN IN THE EVENT OF FAILURE OF THIS COLOR PICTURE TUBE.

THE EQUIPMENT MANUFACTURER SHOULD PROVIDE A WARNING LABEL IN AN APPROPRIATE POSITION ON THE EQUIPMENT TO ADVISE THE SERVICEMAN OF ALL SAFETY PRECAUTIONS.

RAULAND DIV. ZENITH ELECTRONICS/ 2407 W. NORTH AVE. / MELROSE PARK, IL 60160 (708) 345-4700
JANUARY 7, 1993

CUTOFF DESIGN CHART
FIG 1

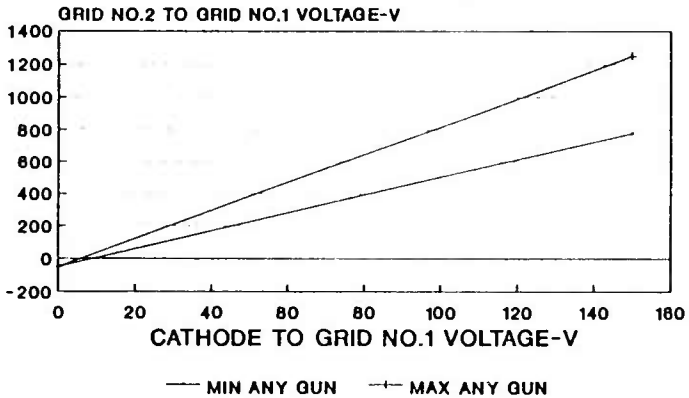

DRIVE CHARACTERISTICS
FIG 2 CATHODE DRIVE

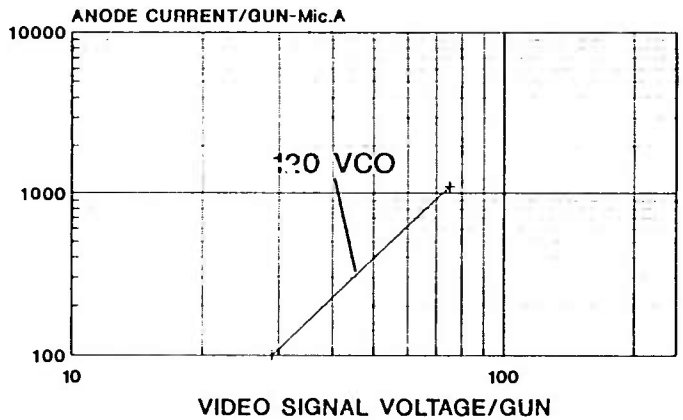

22" FTM H.R.

ISOEXPOSURE-RATE CURVES
FIG 3-0.5MR/H LIMIT CURVES

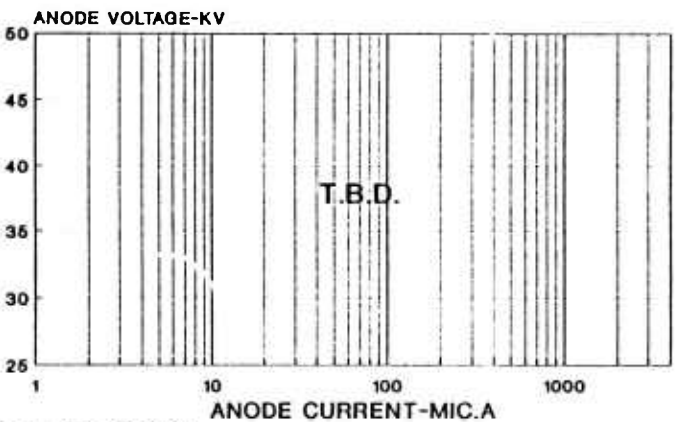

X-RADIATION LIMIT CURVES
FIG 4-ANODE CURRENT 200MIC.A

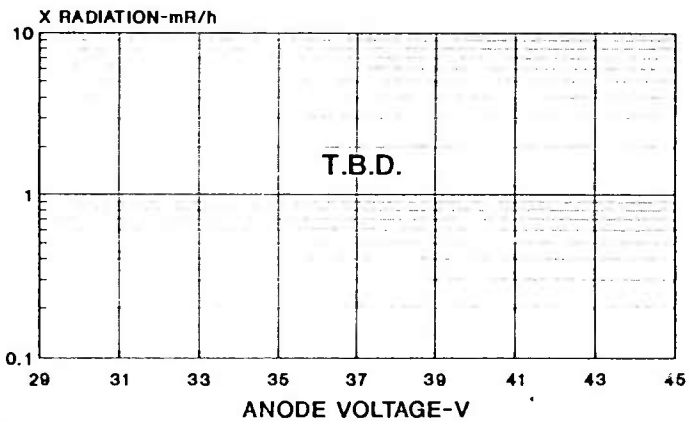

Jan.7 1993

HIGH RESOLUTION 22 INCH

YOKE SPECIFICATIONS:

HORIZONTAL COILS CONNECTION		T.B.D.
INDUCTANCE		T.B.D. mH ±
RESISTANCE		T.B.D. Ω ±
VERTICAL COILS CONNECTION		T.B.D.
INDUCTANCE		T.B.D. mH ±
RESISTANCE		T.B.D. Ω ±
D.C. SENSITIVITY ($LI^2/2$)	HORIZONTAL	1.8m JOULES
	VERTICAL	1.4m JOULES

NOTE: I EQUALS 1/2 THE FULL SCALE DEFLECTION CURRENT AT 25KV ULTOR VOLTAGE.

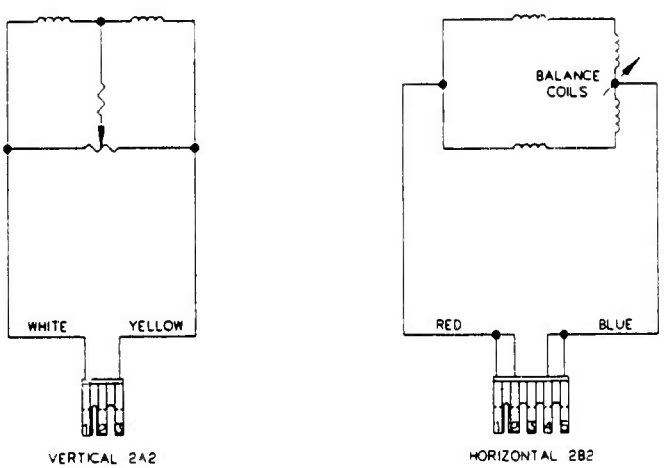

DEFLECTION YOKE CIRCUIT DIAGRAM

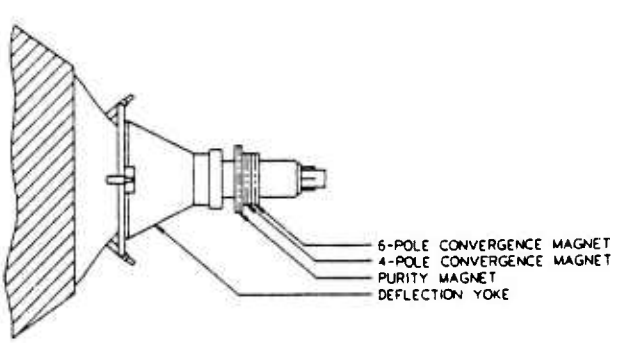

RELATIVE PLACEMENT OF TYPICAL COMPONENTS

HIGH RESOLUTION 22 INCH

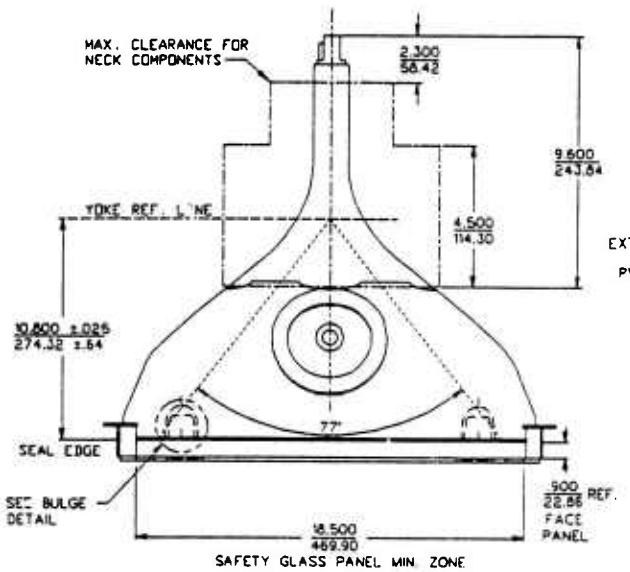

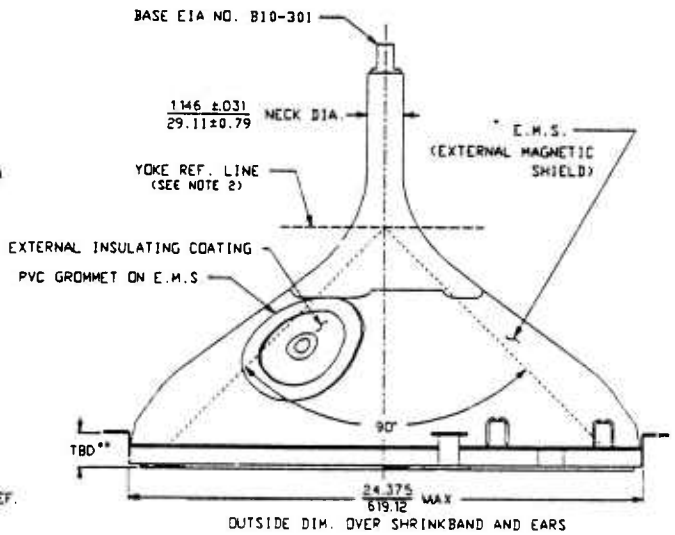

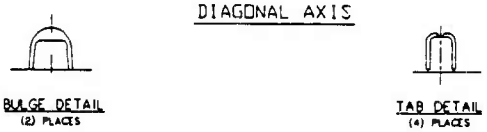

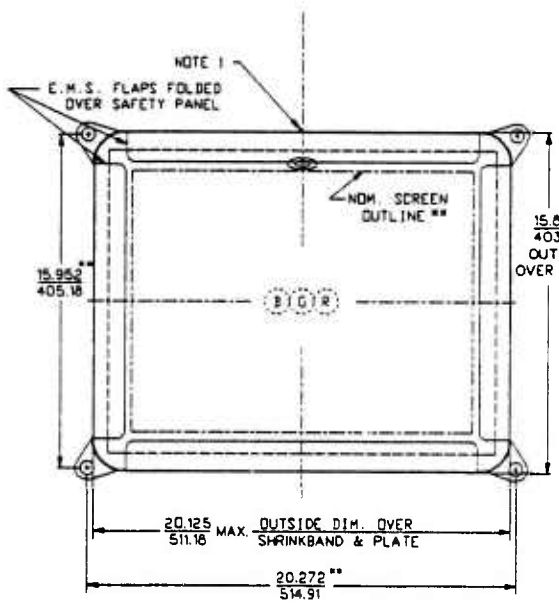

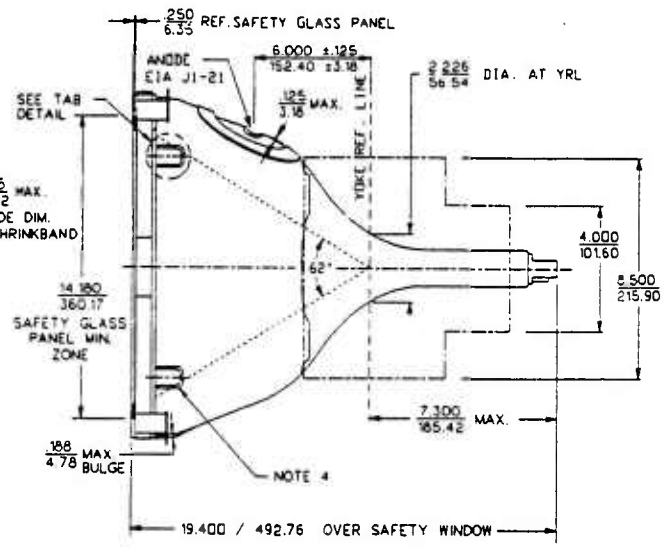

** NOMINAL SCREEN DIMENSIONS:

DIAGONAL AXIS - 21.600 / 548.64
MAJOR AXIS - 17.260 / 438.91
MINOR AXIS - 12.960 / 329.18

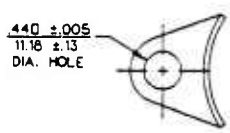

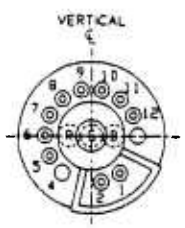

PIN-1	GRID NO. 3 (F1)
PIN-2	GRID NO. 3 (F2)
PIN-4	IC (DO NOT USE.)
PIN-5	GRID NO. 1
PIN-6	GREEN CATHODE
PIN-7	GRID NO. 2
PIN-8	RED CATHODE
PIN-9	HEATER
PIN-10	HEATER
PIN-11	BLUE CATHODE
PIN-12	IC (DO NOT USE.)

ENLARGED VIEW OF BASE (REAR VIEW)

NOTES:

1. TOP OF TUBE IN NORMAL OPERATING POSITION.
2. YOKE REFERENCE LINE IS DETERMINED BY PLANE "C-C" OF EIA GAUGE G-23062, WHEN SEATED AGAINST FUNNEL.
TBD 3. ASTERISK (*) INDICATES THE MAXIMUM CONTOUR DIMENSIONS OF THE EXTERNAL MAGNETIC SHIELD.
4. KICK-OUT TABS FOR GROUNDING OF DAG COATING AND SHIELD TO CHASSIS; ONE PAIR AT EACH MINOR SIDE.
5. THE POSITION LOCATION OF THE MOUNTING LUG HOLES WILL ACCOMODATE FASTENERS UP TO .250/6.35 DIAMETER WHEN POSITIONED ON THE TRUE HOLE CENTERS.

** = SUBJECT TO CUSTOMER APPROVAL