AD-A263 325

Technical Report 1528
November 1992

Advanced Unmanned Search System (AUSS) Description

H. V. Jones

DTIC
ELECTE
APR 26 1993
S B D

93-08785

93 4 23 079

Approved for public release; distribution is unlimited.

Technical Report 1528
November 1992

Advanced Unmanned Search System (AUSS) Description

H. V. Jones

NAVAL COMMAND, CONTROL AND OCEAN SURVEILLANCE CENTER
RDT&E DIVISION
San Diego, California 92152-5000

J. D. FONTANA, CAPT, USN
Commanding Officer

R. T. SHEARER
Executive Director

ADMINISTRATIVE INFORMATION

This work was performed by members of the Ocean Engineering Division (Code 94), Naval Command, Control and Ocean Surveillance Center, RDT&E Division, San Diego, CA 92152-5000, under program element 0603713N, project S0397. The work was performed for the Assistant Secretary of the Navy for Research and Development, Washington, DC 20350.

Further information on AUSS is available in related reports that represent NRaD efforts through FY 92. A bibliography of these reports may be found at the end of this report.

Released by
N. B. Estabrook, Head
Ocean Engineering Division

Under authority of
I. P. Lemaire, Head
Engineering and Computer
Sciences Department

DTIC QUALITY INSPECTED 4

Accession For	
NTIS GRA&I	☑
DTIC TAB	☐
Unannounced	☐
Justification	
By	
Distribution/	
Availability Codes	
Dist	Avail and/or Special
A-1	

LH

CONTENTS

INTRODUCTION 1

VEHICLE 1

FORWARD FREE-FLOODING SECTION 1

CENTER SECTION 4

AFT FREE-FLOODING SECTION 11

ACOUSTIC LINK 12

VEHICLE ACOUSTIC LINK 12

SURFACE ACOUSTIC LINK 13

CONTROL VAN 13

SURFACE COMPUTERS 15

VEHICLE CONTROL 15

IMAGE PROCESSING 17

NAVIGATION 17

DATA LOGGING 17

RECORDING EQUIPMENT 17

MAINTENANCE VAN 18

UPS 18

MAIN BATTERY CHARGER 18

TRANSDUCER POLE 19

DESCENT STRING 19

HANDLING SYSTEMS 19

VEHICLE HANDLING SYSTEM 21

EARS HANDLING SYSTEM 23

BIBLIOGRAPHY 25

FIGURES

1. AUSS vehicle 2

2. Vehicle center section (end view) 5

3. AUSS vehicle computers 7

4. Vehicle electronic chassis (side view) 9

CONTENTS (continued)

5. AUSS link operating geometry 13
6. Control console 14
7. AUSS surface computers 16
8. Descent string 20
9. Launch ramp 22
10. EARS launcher 24

INTRODUCTION

The Advanced Unmanned Search System (AUSS) was designed to perform broad-area search and contact evaluation to depths of 20,000 feet. The system is based on a single, untethered, semiautonomous, supervisory controlled vehicle. Without the burden of a cable, or the need to place a second vehicle in the water for target investigation, this system can reduce present search operation times by an order of magnitude. The vehicle has a forward speed of 5 knots and a minimum 10-hour search capability. AUSS is self-contained and needs only a suitable support ship to perform searches. In addition to the vehicle, the system includes a control van, maintenance van, acoustic link, transducer pole, descent string, and handling systems.

VEHICLE

The AUSS vehicle is an unmanned, untethered, self-propelled submersible designed to withstand the pressures experienced at depths of 20,000 feet. It is 17 feet long, 31 inches in diameter, and weighs 2800 pounds. As shown in figure 1, the vehicle is made up of a free-flooding forward section, a center pressure vessel, and a free-flooding aft section.

FORWARD FREE-FLOODING SECTION

The main components that make up the forward section of the vehicle are the fairing, forward vertical thruster, search and recovery (SAR) gear, ascent weights, forward-looking sonar (FLS), obstacle-avoidance sonar (OAS), charge-coupled device (CCD) electronic still camera, and 35-mm camera. Components inside the forward section are connected electrically to the center section using pressure-compensated, oil-filled wiring harnesses and bulkhead connectors.

All of the components in the forward section are housed in and/or mounted to the forward fairing. The forward fairing is fabricated of Spectra 1000, which is a woven polyethylene mat impregnated with resin (similar to fiberglass construction). This Spectra-resin composite was chosen because it has a specific gravity very close to that of water. The forward fairing is attached to the forward titanium endbell, which is part of the center pressure vessel.

The forward vertical thruster is one of two vertical thrusters on the vehicle. It is mounted in a thruster tube integral to the forward fairing. At lower speeds, where the elevators are less effective, the vertical thrusters are used to change and maintain pitch and depth. The forward vertical thruster is a direct drive, pressure-compensated, brushless, 120-VDC motor with special high-frequency integral motor controller. It is manufactured for the Naval Command, Control and Ocean Surveillance Center, RDT&E Division (NRaD), by Industrial Drives and produces .33 hp at 1200 rpm. The motor controller operates at approximately 40 kHz so it will not interfere with the acoustic link.

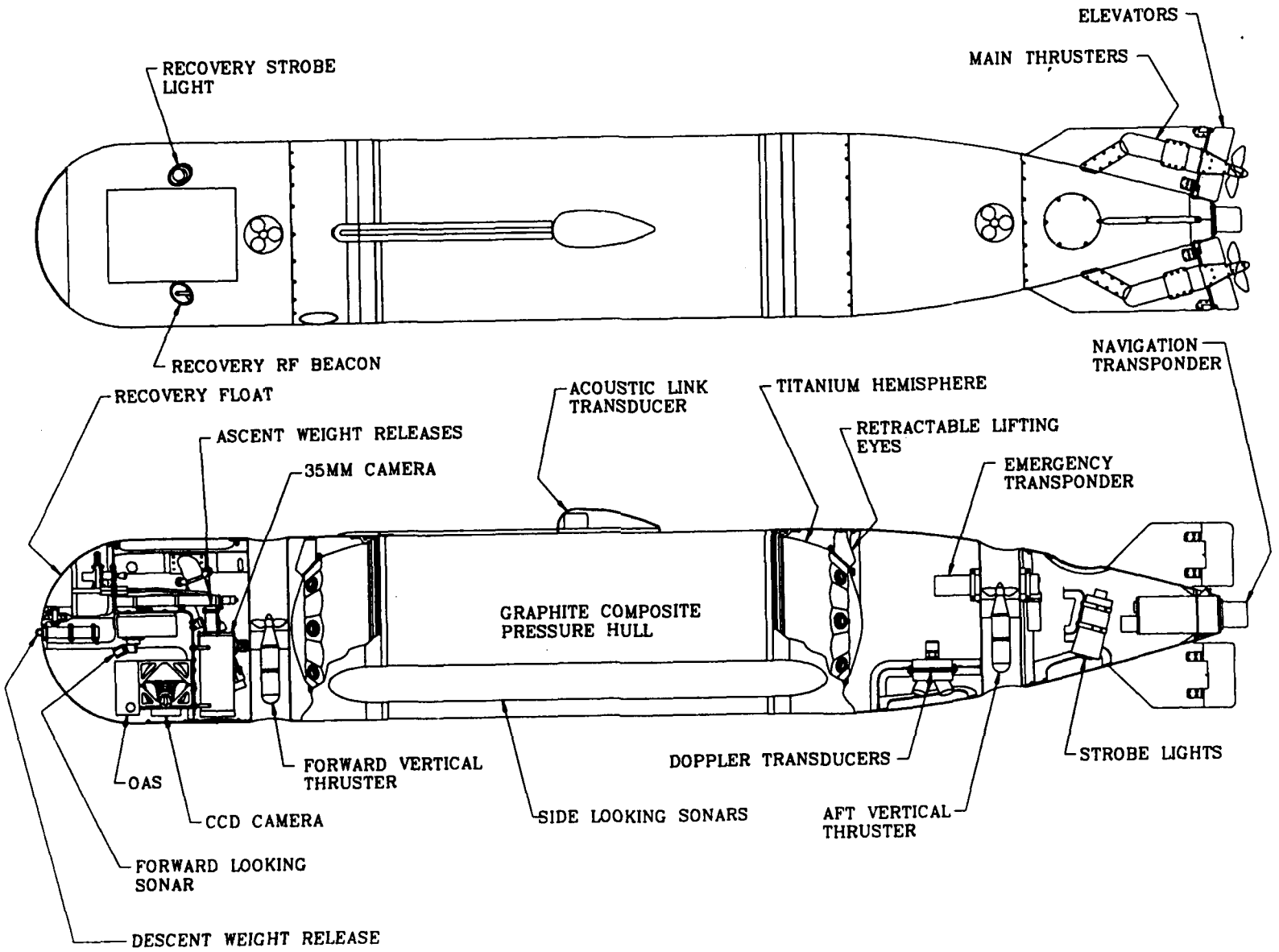

Figure 1. AUSS vehicle.

The vehicle's SAR gear includes a recovery float with release, a strobe light, and an RF beacon. Upon surfacing, the recovery float is released, and the strobe light and RF beacon are erected. The recovery float is made of syntactic foam that has been covered with a Spectra-resin skin. The float is secured to one end of a 80-foot-long polypropylene line that is also secured to the vehicle. This line is grappled and used for vehicle recovery. The strobe light is a Novatech Designs Ltd., model ST 400AR xenon flasher. The strobe has an adjustable range of 2 to 4 nautical miles. The RF beacon, also from Novatech, is a model RF 700AR. This RF beacon has a range of 4 to 6 miles to a vessel and up to 22 miles to an aircraft.

The vehicle's two ascent weights are made of 36-pound lead forms attached to corrosive link assemblies. These weights are held into pockets in the forward fairing by solenoid-operated, weight release mechanisms. When the ascent weights are dropped, the vehicle becomes positively buoyant and returns to the surface for recovery. In an emergency, the ascent weights are dropped automatically to bring the vehicle to the surface. The conditions that may cause this are as follows: (1) The vehicle has not received an acoustic link communication for a specific period of time (usually 45 minutes). (2) The main silver-zinc battery voltage has dropped below allowable limits. (3) An individual cell voltage in the main battery has dropped below allowable limits. (4) The emergency backup battery voltage has dropped below allowable limits. (5) The voltage across any of the ascent or descent weight release solenoid activation capacitors has dropped below allowable limits. (6) Water is detected by leak detect circuits placed throughout the interior of the pressure hull.

If for some reason the vehicle cannot drop the ascent weights, the corrosive links will dissolve sufficiently to drop the weights in approximately 30 hours (from launch).

The FLS consists of an EDO Corporation model 764, mechanically scanned head assembly and custom AUSS interface and processing electronics. The transducer operates at 100 kHz and has a horizontal beam of 1.8° and a vertical beam of 60°. The FLS can be mechanically scanned from 90° port to 90° starboard in 1.8° increments. The positioning of the sonar head is directly under computer control so that partial scans from and to any head position can be directed by the operator.

The OAS is used to detect obstructions that the vehicle may encounter. It consists of an ITC model 3355 transducer and custom AUSS interface and processing electronics. The transducer operates at 267 kHz, has a narrow vertical beam of 5° and a wide horizontal beam of 60°. This beam pattern will make it possible for the vehicle to discriminate between bottom returns and reflections of sonar energy from an object in the water column that is in the path of the vehicle. At this time, the OAS consists of hardware only and is not operational.

The CCD camera hardware consists of a Marine Imaging Systems MKII cooled CCD camera head, lens, and control electronics mated to custom AUSS computer hardware. The camera head and lens are mounted in a custom AUSS titanium pressure housing secured to the forward fairing. The CCD camera is cooled to minimize thermal noise and thus increase sensitivity. All images are provided as 14-bit digitized

information at spatial resolutions up to 576 by 384. The camera has a horizontal field of view of 45° and a vertical field of view of 31 .

The 35-mm camera is a modified Photosea model 1000. It is powered directly from the vehicle and has a 50° horizontal and 35° vertical field of view. The camera has a bulk film magazine that can handle up to 250 exposures per load, and a data chamber provides a time stamp option on each frame as it is exposed. The triggering of the 35-mm camera is directly under computer control by direction of the operator. The 35-mm camera is generally used only for documentation purposes, while the CCD camera is used for search and evaluation.

CENTER SECTION

The center section is a pressure vessel housing most of the vehicle's electronics, along with the vehicle's computers, batteries, and trim system (figure 2). In addition to providing a dry environment, the pressure vessel also provides buoyancy due to a weight-to-displacement ratio of 0.58. Mounted to the outside of the pressure vessel are port and starboard side-looking sonar (SLS) transducers along with the vehicle acoustic link transducer.

The pressure vessel is made up of a cylindrical pressure hull and two hemispheres (endbells). The pressure hull is a graphite-fiber-reinforced plastic (GFRP) composite with a wall thickness of 2.5 inches. The composite structure is filament wound using a process in which bundles of epoxy-wetted graphite filaments are wrapped around a mandrel with alternating hoop and axial winds. Hoop filaments are normal to the cylinder axis (90°) and axial filaments are parallel to the cylinder axis (0°). The hoop-to-axial filament ratio from the cylinder inside diameter through the first 1.0 inch of wall thickness is 2.5 to 1. A 2-to-1 ratio is used for the remainder of the wall thickness, except for the final layer, which is a hoop layer. These filament ratios are used because hoop stress is twice the axial stress in a cylindrical pressure vessel. A titanium coupling ring is bonded to each end of the GFRP cylinder using epoxy resin. These two coupling rings each have a single o-ring groove for face sealing to the endbells. Each endbell is a one-piece titanium machining. Vacuum along with the external water pressure is the primary mechanism for holding the endbells to the pressure hull. Clamp bands act as fairings and also hold the vehicle together if vacuum is lost. In order to electrically connect the vehicle's center section to the forward and aft sections, each endbell is equipped with eight bulkhead connectors. These connectors are 14-pin D.G. O'Brien number 1380018-101 with titanium housings. The pressure vessel has been subjected to hydrostatic pressure testing to 10,000 psi.

The vehicle's main power comes from a 20-kWh silver-zinc battery. The silver-zinc battery is rechargeable and uses potassium hydroxide liquid electrolyte. The battery is made up of four packs with 20 cells each. The battery cells are manufactured for NRaD by Whittaker-Yardney Power Systems and are model NR140DC-1. All cells are wired together in series to provide 120 VDC to the vehicle. Each battery pack is housed in a custom Spectra 1000 and resin composite battery box. Also located within the battery box are cell monitor boards. These custom monitors sequentially step

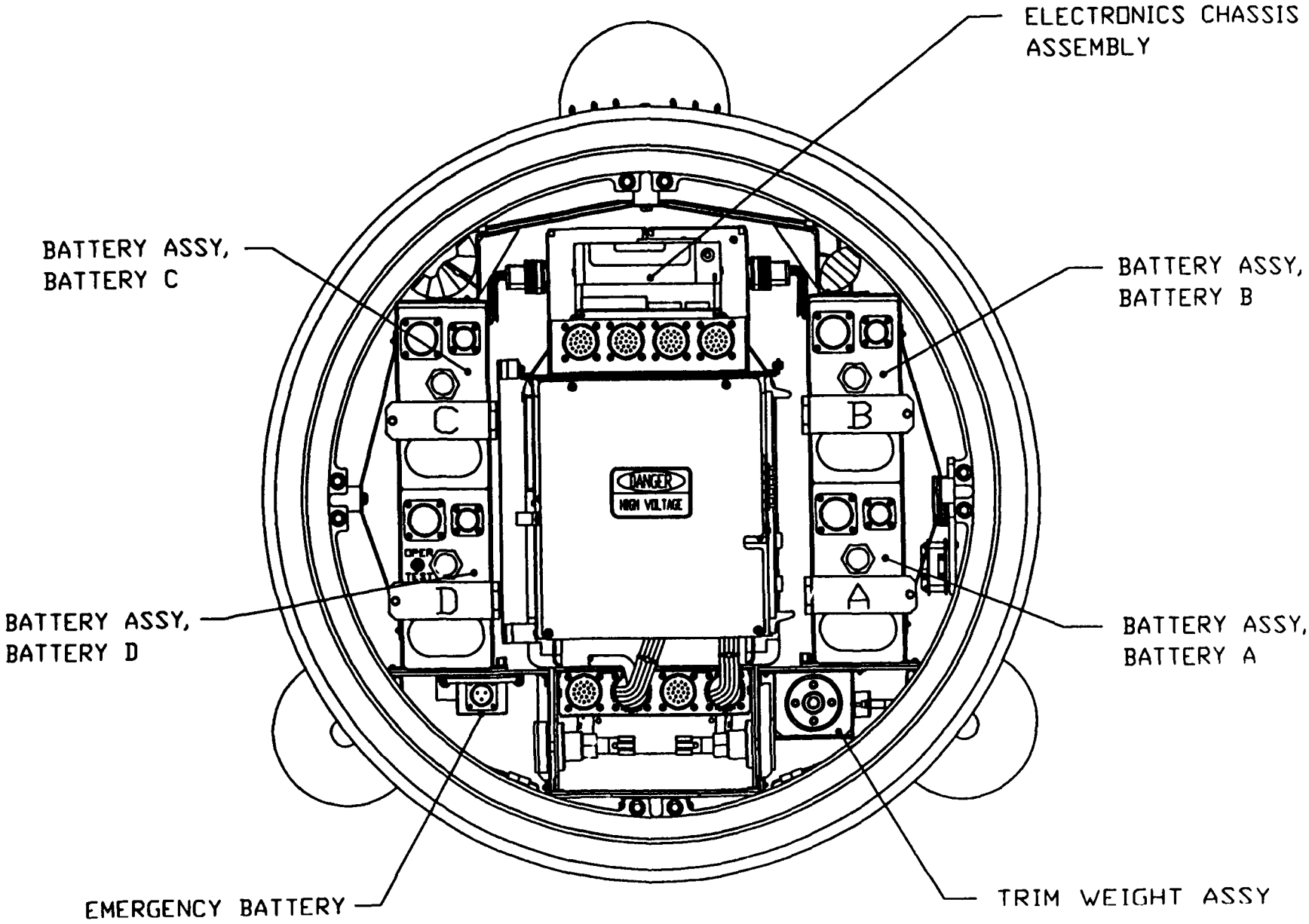

Figure 2. Vehicle center section (end view).

through each cell of the four battery packs and provide cell voltages. The monitors are used to prevent the cell voltages from dropping below an allowable limit when discharging or rising above an allowable limit when charging. The four battery boxes are housed inside the pressure hull, two to the port and two to the starboard of the electronics chassis, as shown in figure 2.

If the vehicle's main power supply should fail for any reason, an emergency battery assembly provides approximately 1 hour of emergency processor operation (the emergency computer function is resident in the center bit bus). The emergency battery is made up of 19 nickel cadmium battery cells. Each cell is a Sanyo Energy (USA) Corporation model KR-2800D with a nominal capacity of 2.8 amp-hours at a nominal voltage of 1.2 volts. These battery cells are connected in series and mounted in a custom sheet metal box.

Figure 3 is a block diagram of the vehicle computers. The system divides into two major sections: the main vehicle computer (MV) section (which includes the bit-bus controllers) and the search sensor and communications computers. The search sensor and communications computers consist of the vehicle sensor (VS), image manipulation processor (IMP), digital signal processor (DSP), vehicle acoustic link (VA), and vehicle sensor logger (VSL). Except for the VSL, all vehicle computers use Intel 80386 central processors and are mounted in Multibus II card racks in the electrical chassis. The VSL is a PC-compatible, 80286 Little Board Computer with a 200-MB removable hard drive and is mounted on top of the electrical chassis. The VSL computer uses a DOS operating system and software written in C. All other vehicle software is written in PL/M and is run under the RMK realtime operating system.

The MV computer controls the motion and activities of the vehicle. The MV software includes heading, depth, altitude, pitch, and speed control algorithms for both hover (vertical thruster control of depth/altitude for low forward speeds) and transit (elevator control of depth/altitude for higher speeds) modes. The MV is responsible for obtaining and handling navigation and control sensor information directly and through the main computer bus from the bit-bus controllers. MV software is also responsible for the higher level control of the vehicle through maneuvers such as SLS search patterns, hovering over a target, and photomosaic search patterns. The MV also monitors several critical vehicle functions and takes emergency actions based upon the status of these functions. Most emergency conditions result in the two ascent weights being dropped and the vehicle coming to the surface for recovery. If the MV fails, the emergency computer, resident in the center bit bus, will take over the emergency functions.

The VS computer serves as the master controller for the search sensor and communication computers. It also controls all data communication over the acoustic link.

The IMP computer serves as the interface and first-level processing node for all vehicle search sensors, and passes and retrieves data from the VSL.

The DSP computer serves as a slave to the IMP, performing secondary data processing functions for sensor data, including data compression.

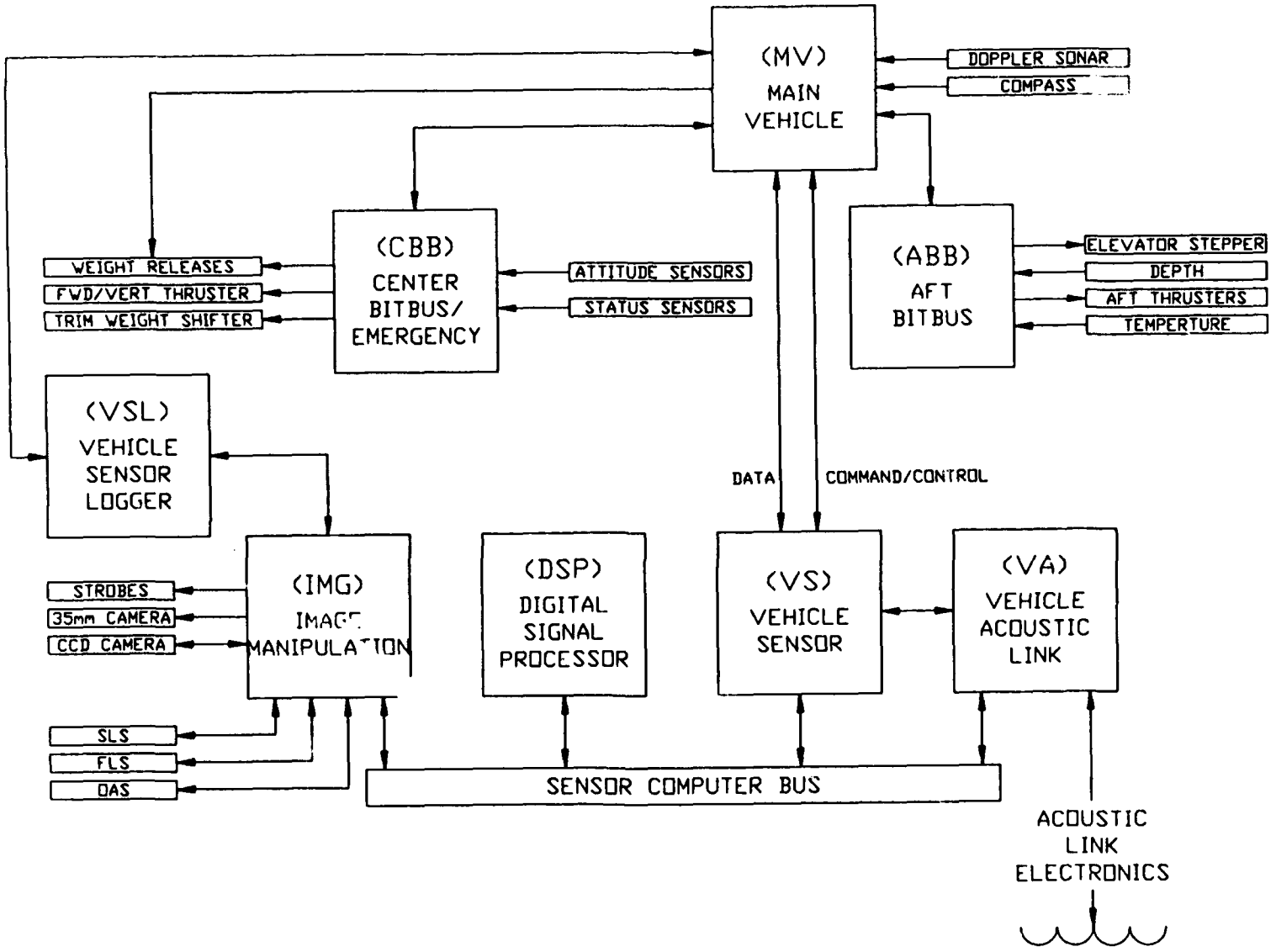

Figure 3. AUSS vehicle computers.

The VSL was designed to provide onboard disk storage and retrieval for unprocessed sensor image data under control of the IMP. It is presently being used to store flight recorder data for post-dive analysis.

The VA controls the vehicle acoustic link electronics. It passes all data downlink to the vehicle and uplink from vehicle to surface. The VA function is similar to the surface acoustic link, which is located in the control van, but has additional acoustic navigation capabilities.

The AUSS vehicle was designed with an electronic chassis that can easily be slid into and out of the center of the pressure hull (figure 4). In addition to the vehicle computers, this electronics chassis contains the gyrocompass, angle and angular rate sensors, weight release circuits, power amps, computer power converters, and power distribution panel. Extra space has been designed into the electronics chassis to allow for future expansion.

The gyrocompass (gyro) system is a Robertson-Shipmate Incorporated "Subsea" model. The gyro was repackaged for AUSS and is used to determine the heading of the vehicle within +/-0.5°. This information is sent to the MV computer and used with Doppler sonar information to determine vehicle velocity vectors. The gyro is also used with yaw rate feedback in the heading control loop.

AUSS is equipped with sensors to measure the roll angle, pitch angle, pitch rate, and yaw rate. Both of the angle sensors are manufactured by Humphrey Incorporated and have a +/-90° range. The roll angle sensor is model CP17-0661-1 and the pitch angle sensor is model CP49-0131-1. The pitch and yaw rate sensors are both Watson Industries Incorporated model ARS-C121-1A with a range of +/-30°/second. The roll angle and pitch angle sensors provide feedback for both operator information and Doppler compensation (velocity correction). The pitch angle, pitch rate, and yaw rate sensors along with the gyro, provide feedback used to stabilize the vehicle flight control loops.

The AUSS vehicle has three weight release circuits, one for the descent string and one each for the ascent weights. Each of these custom electrical circuits includes a capacitor, a charge circuit, and a relay to connect the charged capacitor to the weight release solenoid. These circuits can be activated by either the MV computer, emergency computer, or emergency transponder.

Amplifiers are used to power the acoustic link transducer, navigation transponder, FLS transducer, OAS transducer, and two SLS transducers. These custom-built power amps vary primarily in power output from application to application. The acoustic link amp has a 100-watt output; the navigation amp, 100 watts; FLS amp, 500 watts; OAS amp, 50 watts; and the two SLS amps, 1000 watts.

The electrical chassis contains 15 DC-to-DC power converters. Six of these converters are for the MV computer, eight for the sensor computers, and one for the center bit bus. All of these power converters are Vicor VI-200 Series converters modified for each application with custom AUSS electronics.

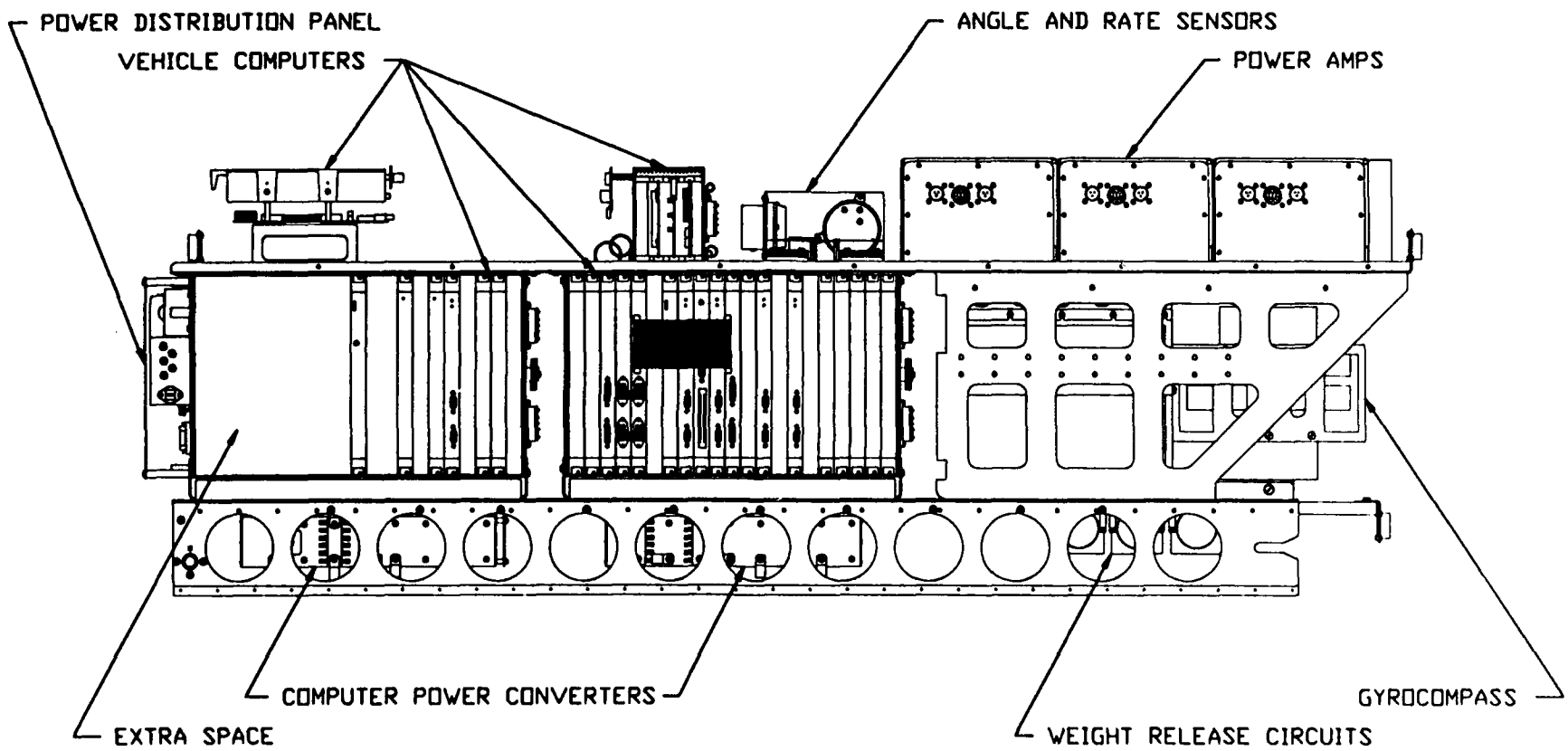

Figure 4. Vehicle electronic chassis (side view).

Located at the aft end of the electrical chassis is a power distribution panel. This custom AUSS panel fuses and distributes power from the main batteries to the power-consuming hardware throughout the vehicle. Also included on this panel is a current sensor to measure the battery power used so estimates of power remaining can be made.

Additional electronics are located in the titanium endbells of the pressure section. The forward endbell houses the 35-mm camera power converter, FLS power converter, CCD electronics, and forward vertical thruster power filter circuit. The aft endbell houses the aft power supply assembly, Doppler sonar electronics, aft endbell power rack, three thruster power filter circuits, and the vehicle computers' aft bit-bus controller. This is the only part of the vehicle computers located outside of the electronics chassis. The aft power supply assembly contains eight DC-to-DC power converters. Four of these converters are for the Doppler sonar, two for the strobe lights, one for the elevator stepping motors, and one for the navigation transponder. All of the power converters in the endbells are Vicor VI-200 Series converters modified for each specific application with custom AUSS electronics. The CCD electronics are used to control the CCD camera, which is located in the forward section of the vehicle. The CCD electronics are part of the Marine Imaging Systems MKII CCD system and are used as purchased. The four power filter circuits for the forward vertical, aft vertical, port main, and starboard main thrusters are all identical and custom to AUSS. They are used to reduce the impact of conducted and radiated electromagnetic interference (EMI) on the vehicle's sensors. The Doppler sonar electronics are part of the purchased EDO model 4235 Doppler sonar system. The Doppler sonar head is located in the aft section of the vehicle and is included in that description.

Leak detector circuits are strategically placed within the pressure hull and endbells. The placement of the leak detector circuits allows at least one of them to function whether the vehicle is descending, ascending, or operating horizontally. These detectors use custom AUSS hardware and are electrically connected to both the main vehicle computer and the emergency computer resident in the center bit bus. If seawater contacts one of these leak detectors, both the main vehicle computer and the emergency computer would automatically activate the ascent and descent weight releases, terminating the dive.

The SLS consists of two side-mounted EDO model 6645 transducers and custom AUSS interface and processing electronics. The transducers have fixed horizontal and vertical beams of 3/4° and 60°, respectively. The port SLS operates at 100 kHz and the starboard SLS operates at 105 kHz. The port and starboard transducers are mounted to the outside of the pressure hull in protective pods bolted to the hull's titanium end rings.

The weight shifter assembly, located under the starboard battery cells, is controlled by the MV computer and is used to statically trim the vehicle in the fore and aft direction (pitch). This assembly includes a custom 10-pound lead weight that is moved in the fore and aft direction by a motorized power screw. The motor used is a

Superior Electric Company SLO-SYN model M063-LS06 DC stepping motor. The power screw is a modified Nook Industries Incorporated #12032.

AFT FREE-FLOODING SECTION

The main components that make up the aft section of the vehicle are the fairing, main thrusters, aft vertical thruster, elevator assembly, Doppler sonar, navigation transponder, emergency transponder, and strobe lights. Components inside the aft section are connected electrically to the center section using pressure-compensated, oil-filled wiring harnesses, and bulkhead connectors.

All components in the aft section are housed in and/or mounted to the aft fairing. Like the forward fairing, the aft fairing is a Spectra 1000 and resin composite. The aft fairing is attached to the aft endbell, which is part of the center pressure vessel.

The AUSS vehicle has two main thrusters that are used to propel and steer the vehicle. As shown in figure 1, these thrusters are angled slightly to provide a larger turning moment about the center of the vehicle. Like the forward vertical thruster, the main thrusters are direct drive, pressure-compensated, brushless DC motors with special high-frequency integral motor controllers. The main thrusters operate at 120 volts and produce .75 hp at 1000 rpm. They are manufactured for NRaD by Industrial Drives.

The aft vertical thruster is mounted in a thruster tube integral to the aft fairing. It is identical to the forward vertical thruster described earlier in this report.

At speeds above approximately 1.5 knots, elevators are used to change and maintain the pitch and depth of the vehicle. The elevators are fiberglass and are positioned using a custom worm gear speed reducer and stepping motor. The gear box is actually a modified version of the boxes used in the Mk 46 torpedoes. The motor is a Superior Electric Company (SLO-SYN) model M063-LS06 DC stepping motor with a modified shaft.

The Doppler sonar system is an EDO Corporation model 4235. The transducer array consists of four acoustic sonar element assemblies aligned at 90° increments around a high-pressure housing. The elements are 60° relative to the horizontal and have a conical beamwidth of 5°. This unit has a range of 4 to 300 feet above the bottom. It is used in conjunction with the gyrocompass (located in the vehicle center section) to determine the velocity vector of the vehicle relative to the ocean bottom and to self-navigate the vehicle during autonomously run search tracks. The Doppler sonar is also used to determine the altitude of the vehicle above the bottom and the water temperature.

The navigation transponder is made up of a ITC 3166 transducer and custom electronics located in the acoustic link processor. The transducer is used to transmit only. Interrogation of the navigation transponder is done through the acoustic link. The navigation transponder is used as a beacon during mission tracking and to interrogate networks of deep-ocean transponders (if used) for long baseline tracking of the vehicle.

The emergency transponder is used for both vehicle tracking and as an emergency backup. This transponder is a SonaTech Incorporated model NT-029. It is equipped with an optional 12-month battery pack and commandable dual-relay output for operating external devices. The emergency transponder responds to interrogations from the ship-mounted transducer pole for short baseline tracking of the vehicle. Since the transponder has its own battery pack, an otherwise dead vehicle can be tracked for an extended period of time. One of the transponder's commandable relays is used as a backup method of releasing the vehicle ascent weights. The second relay will reset the sensor computer if vehicle power is available. If vehicle power is off, a command to this second relay will turn it on.

Two Photosea model 1500SX strobe lights are mounted in custom titanium housings. These strobes are 150 Joule each and obtain power from the main vehicle batteries through a Vicor model VI-253-CU, 120-VDC to 24-VDC converter located in the pressure vessel. The strobes are located in the aft section to provide maximum separation from the cameras. This provides the best source/receiver separation and therefore minimizes backscatter. The strobes are fired by the computers and synchronized with the CCD and 35-mm cameras.

ACOUSTIC LINK

What makes an unmanned, untethered, supervisory controlled system like AUSS possible is a high-data-rate digital acoustic telemetry system. The AUSS acoustic link system is used to send supervisory commands to the vehicle and provide the operators with sensor data and status information. The vehicle sensor data transmitted are the FLS, SLS, and CCD camera images. The status information includes the vehicle depth, altitude, forward velocity, heading, Doppler position, and emergency information.

The acoustic link uses directional transducers operating from 8 to 14 KHz driven with up to 100 watts (for 20,000-foot vehicle depth) to achieve 1200, 2400, or 4800 bps half-duplex communications between the surface and the vehicle. Reliable low-error-rate communications up to 10 km are possible in water depths exceeding 610 meters provided the horizontal distance between the ship and vehicle does not exceed the depth of the vehicle (90° cone). See figure 5.

VEHICLE ACOUSTIC LINK

The vehicle acoustic link transducer is an International Transducer Corporation model ITC-3166, which has approximately a 90° conical beam pattern. This transducer is mounted to the top of the vehicle with the beam pattern directed upward from the vehicle to the surface. The acoustic link transducer was placed on the pressure hull as a result of beam pattern experiments. These experiments showed that mounting the transducer on a pressure hull can increase the front-to-back ratio (the ratio between the gain in the region of a 90° cone above the vehicle and the gain below the vehicle). The pressure hull helps prevent reflections from the sea bottom during transmit and reject reflections from the sea bottom during receive.

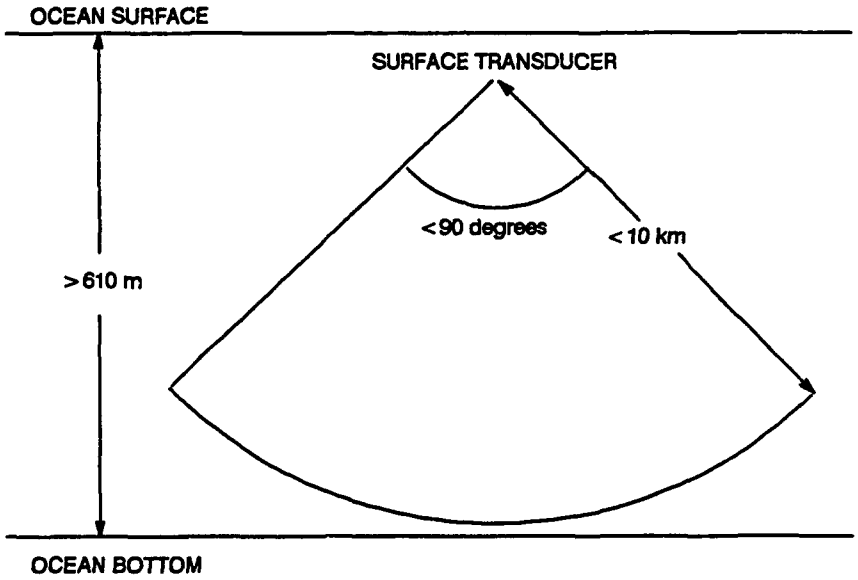

Figure 5. AUSS link operating geometry.

SURFACE ACOUSTIC LINK

The External Acoustic Relay System (EARS) is the surface portion of the acoustic link. EARS is a shallow-towed submersible (towfish) containing a transducer and the acoustic link preamp. The EARS towfish is a 4-foot Endico V-fin attached to 500 feet of cable. During operations, the EARS towfish is towed behind the surface ship at depths between 50 and 300 feet. By doing this, the surface communication link function is decoupled from the noise and motion of the ship. The transducer is a International Transducer Corporation model ITC-3166 mounted in a baffle of closed-cell foam. The baffle helps give the transducer approximately a 90° conical beam pattern and increases the front-to-back ratio. Reflections off the sea surface or ship's hull are prevented (during transmit) and rejected (during receive) by the baffle. The beam pattern is centered on a vertical line running from the transducer to the bottom of the ocean. The acoustic link preamplifier was designed and fabricated at NRaD and has 27 dB of gain. The preamplifier is used to amplify and buffer the receive signals to minimize their susceptibility to distortion and interference.

CONTROL VAN

The control van is a 40-foot-long, converted cargo container that has been air conditioned and divided into two work areas. One area includes a small work bench for electronics repair, storage cabinets, and a table (with booth type seating) for report writing. The second area houses the control console and captain's chairs for the operators, along with additional fold-out seating for seven observers. In addition to the surface computers, the control console (figure 6) houses the peripherals to support vehicle control, image processing, navigation, and data logging. Also housed in the console are a VCR and reel-to-reel recording equipment.

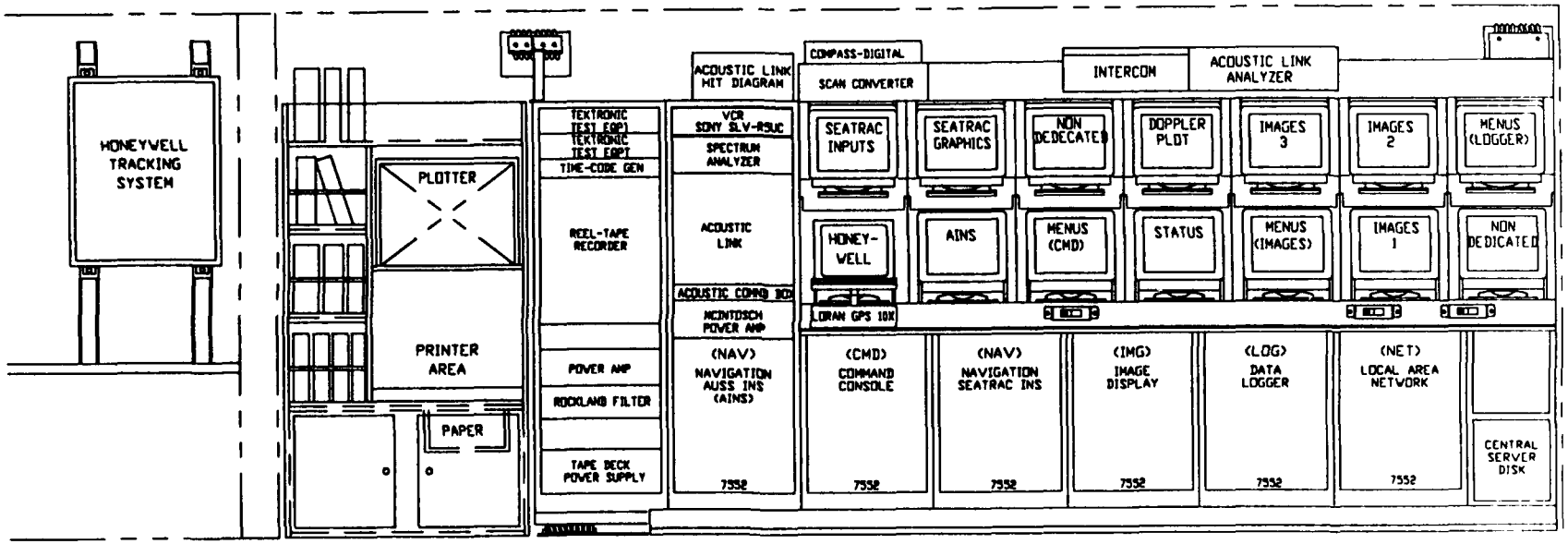

Figure 6. Control console.

SURFACE COMPUTERS

Figure 7 is a block diagram of the surface computers. The five main computers are the AUSS Integrated Navigation System (AINS), Seatrac Integrated Navigation System (Seatrac INS), operator command (CMD), image (IMG), and the data logger (LOG). These five computers are industrial IBM 7552s modified to be AT-compatible and upgraded with either 386 or 486 system boards. These surface computers use the DOS operating system, and their custom software is written in C. Except for the CMD, these computers are connected to a local-area network dedicated fileserver (NET) for file sharing. The NET computer is also an IBM 7552 modified to be AT-compatible and upgraded with a 386 system board. Software for the NET is commercial Novell Advanced NetWare 3.11. The control van also houses the surface acoustic link computer (SA). The SA processor is an Intel 8085 with STD bus, and the software is written in PL/M.

The navigation system (NAV) includes both the AINS and Seatrac INS computers. These computers integrate the tracking information from several sources to relate the position of the ship, vehicle, bottom transponders, and search targets in one coordinate system and to display these coordinates on color monitors.

The CMD computer receives all uplink data from the SA and displays status information on the vehicle status display. The CMD also provides the menus and keyboard interface for the vehicle operator to assemble high-level commands into the command queue for transmission over the acoustic link to the vehicle. All uplink and downlink communications are also sent to the IMG via an RS232 link.

The IMG computer extracts vehicle sensor data and decompresses, formats, and displays the data as images. The IMG allows the IMG keyboard operator to manipulate, enhance, and zoom the sensor data on the sensor displays. Nonimage data are forwarded to the LOG.

The LOG computer is designed to perform several functions. The first function is to capture all nonimage acoustic link data, uplink and downlink, and store it on the dedicated fileserver. The LOG is also designed to display images stored in the fileserver by the IMG, display vehicle Doppler position, and format the vehicle flight recorder data for display and store it in a database file. To date, only the first function has been performed by the LOG. Doppler position is presently being displayed on a laptop computer.

The NET links surface computers together in a local-area network and provides shared storage on a central server disk (fileserver).

The SA controls the surface acoustic link electronics. It handles all data uplink to the surface and downlink from the surface to the vehicle.

VEHICLE CONTROL

Operator commands are input to the CMD computer using a custom AUSS keyboard. This keyboard has only 45 keys and was designed to simplify vehicle operation. Two NEC MultiSync 3D monitors (MultiSync II monitors are interchangeable) are used

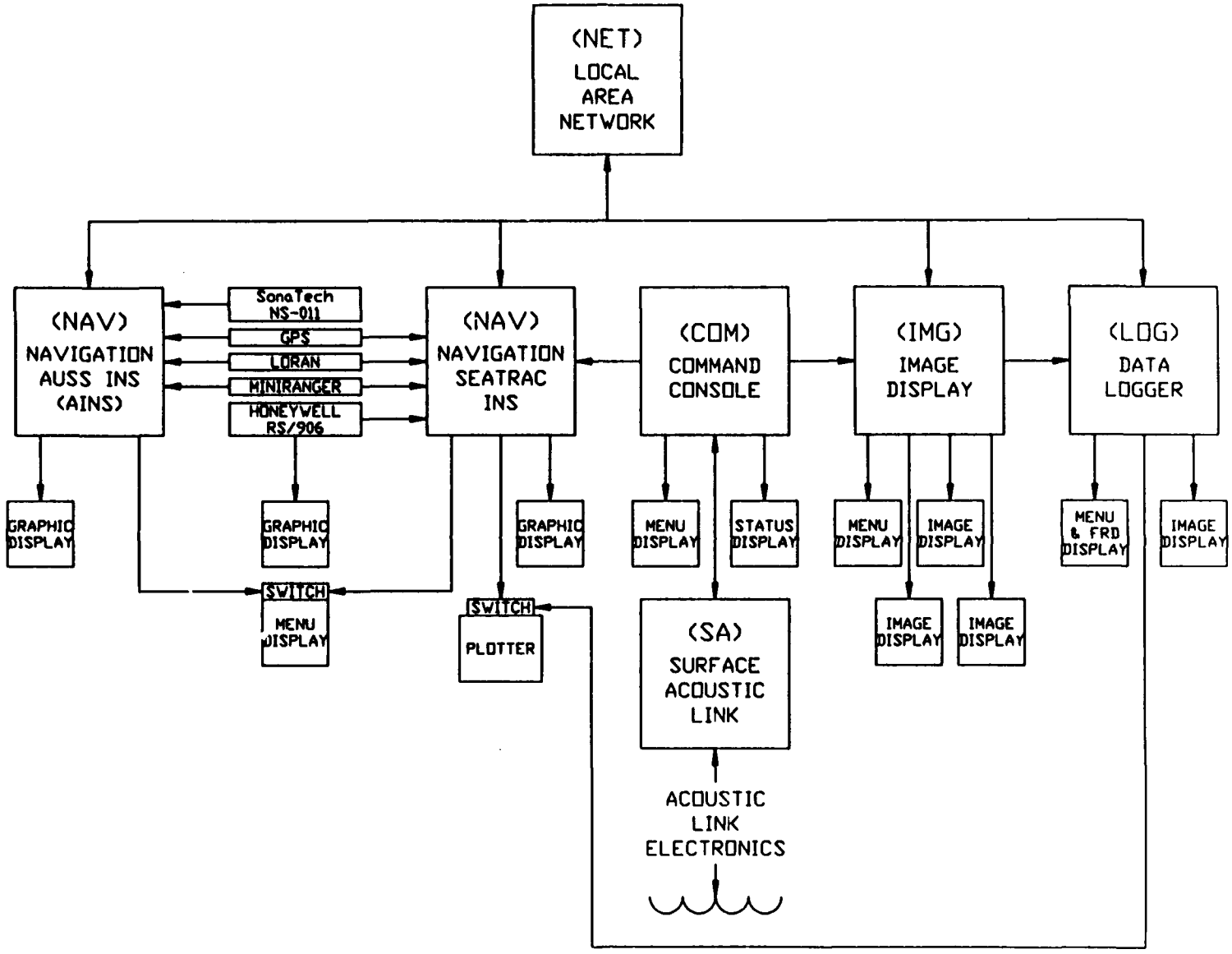

Figure 7. AUSS surface computers.

for CMD displays. One monitor displays menus of commands to the operator, while the second displays vehicle status.

IMAGE PROCESSING

The IMG computer receives operator inputs through a standard 101-key keyboard. Four NEC MultiSync 3D monitors are dedicated to the IMG. One of the monitors is used for menu display, while the other three are used to display vehicle sensor images. The control console also includes two nondedicated NEC MultiSync 3D monitors, which are normally used to display sensor images.

NAVIGATION

Each of the two NAV computers has a dedicated keyboard for operator input. These standard 101-key keyboards are used as purchased. Tracking sources common to both computers are a MiniRanger-III (for range-range microwave tracking of the surface ship), and a Trimble Navigation model 10X LORAN/GPS navigation system (for tracking the surface ship). In addition, the Seatrac INS computer receives ultrashort and long baseline tracking information from a Honeywell Marine Systems Division model RS/906 tracking system (for tracking vehicle position relative to the ship). The AINS computer also receives long baseline tracking information from a SonaTech Incorporated model NS-011 acoustic transceiver (for tracking vehicle relative to a long baseline network of deep-ocean transponders). Four of the monitors in the control console are dedicated to navigation. Two NEC MultiSync II color monitors are used to display graphic data from the AINS and Seatrac INS computers, while a third is switched between AINS and Seatrac input menus. The fourth navigation monitor is a Panasonic model WV-5410 video monitor used to display graphic data from the Honeywell tracking system. The control van can send duplicate navigation information to monitors located on the bridge of the ship. This information assists the captain in navigating the ship. The control console also contains a American Graphtec Incorporated model MP 4200 plotter. This plotter is connected to the Seatrac INS and is used to supply hard copies of tracking and navigation data.

DATA LOGGING

Operator input to the LOG computer is by standard 101-key keyboard or Logitech model T-CA1 TrackMan mouse. Two NEC MultiSync 3D monitors are used to display output from the LOG. One monitor is used to display both input menus and flight recorder data, and the second monitor is for image playback or Doppler plots.

RECORDING EQUIPMENT

All acoustic link transmissions and select sensor images are recorded during a dive. A Sangamo Weston model Sabre 80 reel-to-reel tape recorder is used to simultaneously record the acoustic link transmissions and output from a Chrono-Log Corporation

series 9000 time-code generator. As desired, select sensor images can be sent from the image monitors through a scan converter to the VCR for recording. The scan converter is a YEM Incorporated model CVS-910. The VCR is a Sony Corporation model SLV-R5VC Super VHS recorder.

MAINTENANCE VAN

The maintenance van is also a converted cargo container. It is 30 feet long and has been divided into two air-conditioned rooms. One room is large enough to allow storage, maintenance, and predive testing of the vehicle. Overhead hoists and specially fitted maintenance carts allow the maintenance personnel to open and close the vehicle, exchange the silver-zinc batteries, extract and insert the electronics chassis, and perform most necessary maintenance and repair tasks. This maintenance area also houses the uninterruptible power supply (UPS), battery chargers, tools, and spare parts. The rest of the van is a sealed battery room used for charging the vehicle's main batteries and housing the UPS's standby batteries. This battery room also houses an emergency shower and eye wash.

UPS

The UPS is used to supply surface power to the AUSS vehicle (through a DC power supply), the surface computers, and "clean" outlets in both vans. It is a Behlman Engineering model UPS3-200-31 capable of providing up to 7500 volt-amperes of three-phase AC power at 60 Hz. When normal AC line power is available (shore or ship power), the UPS isolates the load from the line anomalies, such as voltage variations and transient noise. If a complete power failure occurs, or line anomalies exceed tolerable limits for normal UPS operations, an automatic switch to the standby battery supply allows the UPS to maintain an uninterrupted output. Twelve-volt, deep-cycle RV/marine batteries are used for standby power. There are four sets of five batteries each. Each five battery set is wired in series to supply 60 VDC to the UPS. The four sets of batteries are then wired in parallel to give a minimum of 1 hour of computer operation. The UPS is equipped with a battery charger to automatically charge the standby batteries as needed.

MAIN BATTERY CHARGER

AUSS uses a computer-controlled system to charge the main vehicle batteries. This system includes a computer, two power supplies, cell monitor boards (see battery description), and custom interface electronics. The computer, cell monitor boards, and interface electronics are used to avoid overcharging the batteries. Battery life is greatly prolonged by monitoring the cell voltage during charge and keeping the cell from exceeding a high limit. The computer is an industrial PC running custom AUSS software. The power supplies are Sytron Incorporated model SYR 150-20. Each power supply is rated for 150 VDC at 20 amps. A complete description of battery charging and monitoring can be found in NRaD TR 1539.

TRANSDUCER POLE

The transducer pole is an assembly made up of a long aluminum pole with two transducers mounted to one end. One transducer is an International Transducer Corporation model ITC-3185. It is used for long baseline tracking of the vehicle and surface ship (when used in conjunction with a network of deep-ocean transponders), and acts as a backup for the acoustic link. This transducer is baffled to maximize the amount of energy radiated and received in the vertical direction and to keep surface reflections from causing secondary detects. The second transducer is a Honeywell assembly that is used for long and short baseline tracking of the vehicle. The transducer pole can be lowered into the water during operations and removed from the water during transit. The pole is of sufficient length to place the transducers below the bottom of the ship's keel.

DESCENT STRING

A descent string assembly is used to quickly pull the vehicle to operating depth without using vehicle power. This assembly is made up of a descent weight, sections of rope, a transponder, and an arresting float. The configuration of the descent string assembly is shown in figure 8. At the completion of a dive, the transponder and arresting float are recovered.

The descent weight is an approximately 100-pound steel weight with a lifting eye for easy attachment to the descent string. There is also a small 2-pound steel angle iron weight used to prevent line from getting tangled with the transponder. These weights are fabricated at NRaD and are not recoverable at the end of a dive.

The transponder is a SonaTech Incorporated Model NT-020. It is equipped with an "anchor release mechanism," which is activated to release the transponder from the descent weights for recovery. The transponder is used for acoustically marking the starting point of the dive and can be used to track the assembly during ascent.

The arresting float is an NRaD design and is made up of two glass balls (floats), aluminum fairings, and a strobe light. This float is used to prevent the vehicle from hitting the ocean floor when the descent is completed, and supplies the positive buoyancy necessary to pull the transponder to the surface at the end of a dive. The strobe light is for nighttime recovery.

HANDLING SYSTEMS

AUSS includes shipboard equipment to handle both the AUSS vehicle and EARS towfish in conditions up to sea state 3. The vehicle handling system can move the vehicle from the maintenance van to the launcher, launch it, and then reverse this process at the end of the dive. The EARS system can launch, tow, and recover the towfish. Both of these systems work without putting divers or small boats in the water.

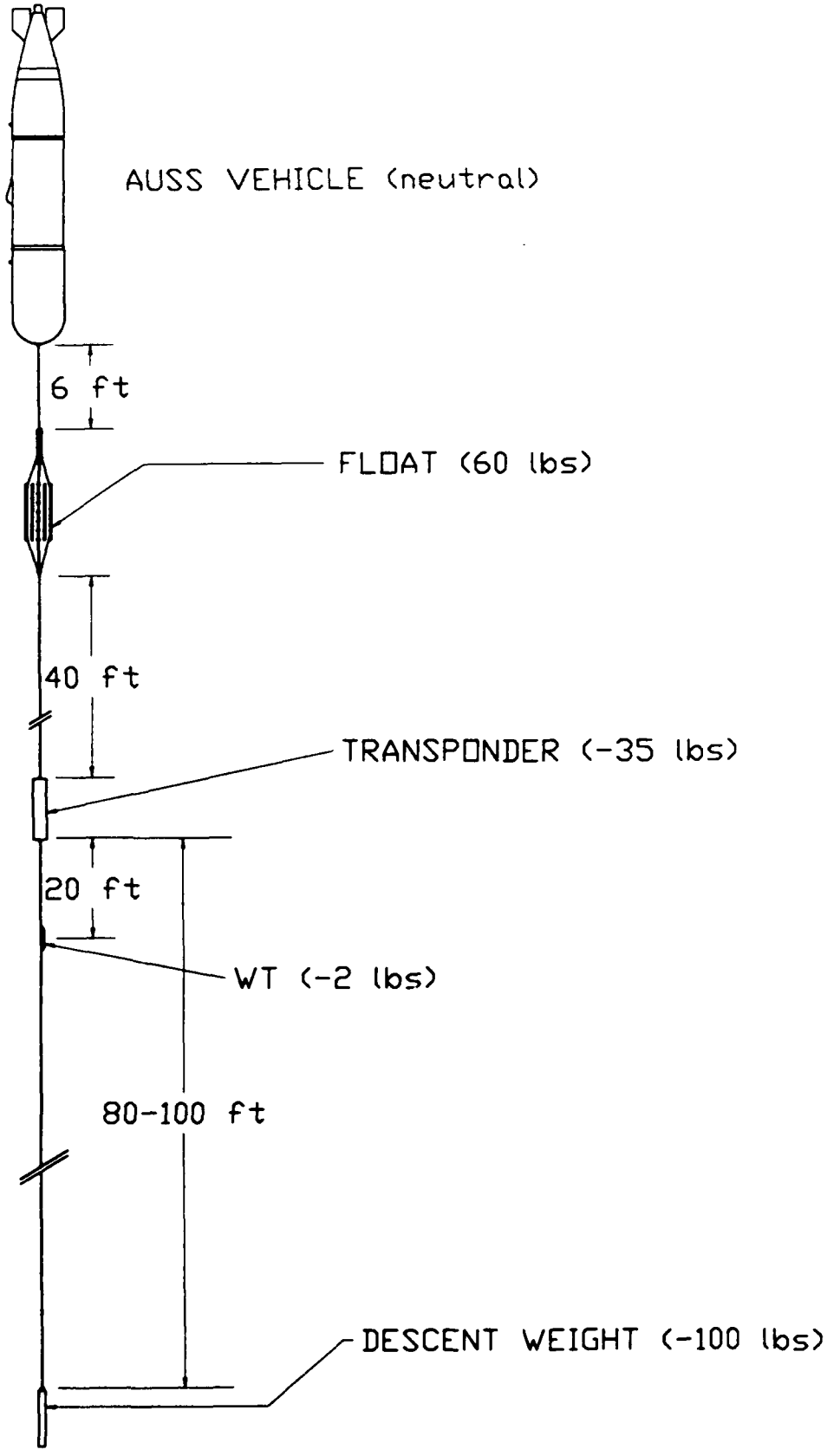

Figure 8. Descent string.

VEHICLE HANDLING SYSTEM

The vehicle handling system includes a trolley system used to transport the AUSS vehicle between the maintenance van and launcher, a launch ramp, and a ramp translation system.

The trolley system includes two trolley assemblies, each of which is a chain hoist and vehicle saddle mounted to a custom trolley. The chain hoists are Columbus McKinnon Corporation series 648 with a 2000-pound lifting capacity each. These chain hoists feature a load limiter to prevent damage to the vehicle when it is pulled up into the saddles. The saddles are custom padded aluminum weldments designed to keep the vehicle from swinging in heavy seas. The trollies ride on a system of overhead I-beams that run from inside the maintenance van to over the launcher. Aft of the maintenance van, the I-beams are supported by a custom overhead structure, mounted to the top of the van.

The launch ramp (figure 9) is a custom aluminum structure with rollers to support the vehicle, a motorized capstan, and a winch-operated docking cart. The capstan is an obsolete model once manufactured by Maxwell Marine Incorporated; the docking cart winch is a Rule Industries Incorporated model V84RE. Both the capstan and docking cart winch are powered by the same two 12-volt RV/marine batteries housed in a battery box on the launch ramp. The launch ramp is attached to the ship using a tiltable, rotatable support (fifth-wheel assembly) welded to the ship's transom. During launch, the ramp is translated aft through this fifth-wheel assembly and is tilted by gravity into the water. The aft end of the launcher floats on the water due to buoyancy voids in its structure. This helps to decouple the aft end of the launch ramp from the motions of the ship. Once released from the ramp, gravity pulls the vehicle into the water. During a recovery, the vehicle's nose line is grappled, threaded through the docking cart at the aft end of the ramp, and wrapped around the capstan. The capstan is used to pull the vehicle to the launch ramp and mechanically mate it to the docking cart. The vehicle and docking cart are then brought up the ramp by the docking cart winch and the ramp is pulled out of the water by the translation system.

The ramp translation system was designed and fabricated at NRaD. A winch with hydraulic power unit and control box is used to move a deck-mounted cable car in the fore and aft direction. The forward end of the launch ramp is connected to this cable car by a 8-foot-long tongue. The tongue has a universal joint on each end to allow the ramp to both tilt and rotate. The custom winch includes a Sundstrand-Sauer model 22-3047 fixed-displacement motor, an Ausco model 27933 fail-safe brake and a Fairfield Manufacturing Company Torque Hub (planetary gear reduction hub). The outer housing of the Torque Hub has been modified for use as the cable drum. The launcher winch has a remote hydraulic power unit (HPU) that can be located away from the winch out of the weather. The main components making up the HPU are a Sundstrand-Sauer model 20-2050 variable-displacement pump directly driven by a Reuland Electric model B10735V-X 30HP motor. The 30-hp electric motor requires 440-volt, three-phase ship's power. The HPU is connected to the winch with hydraulic hoses. These hoses can be rerouted to the EARS winch if an HPU backup is needed. The launcher is

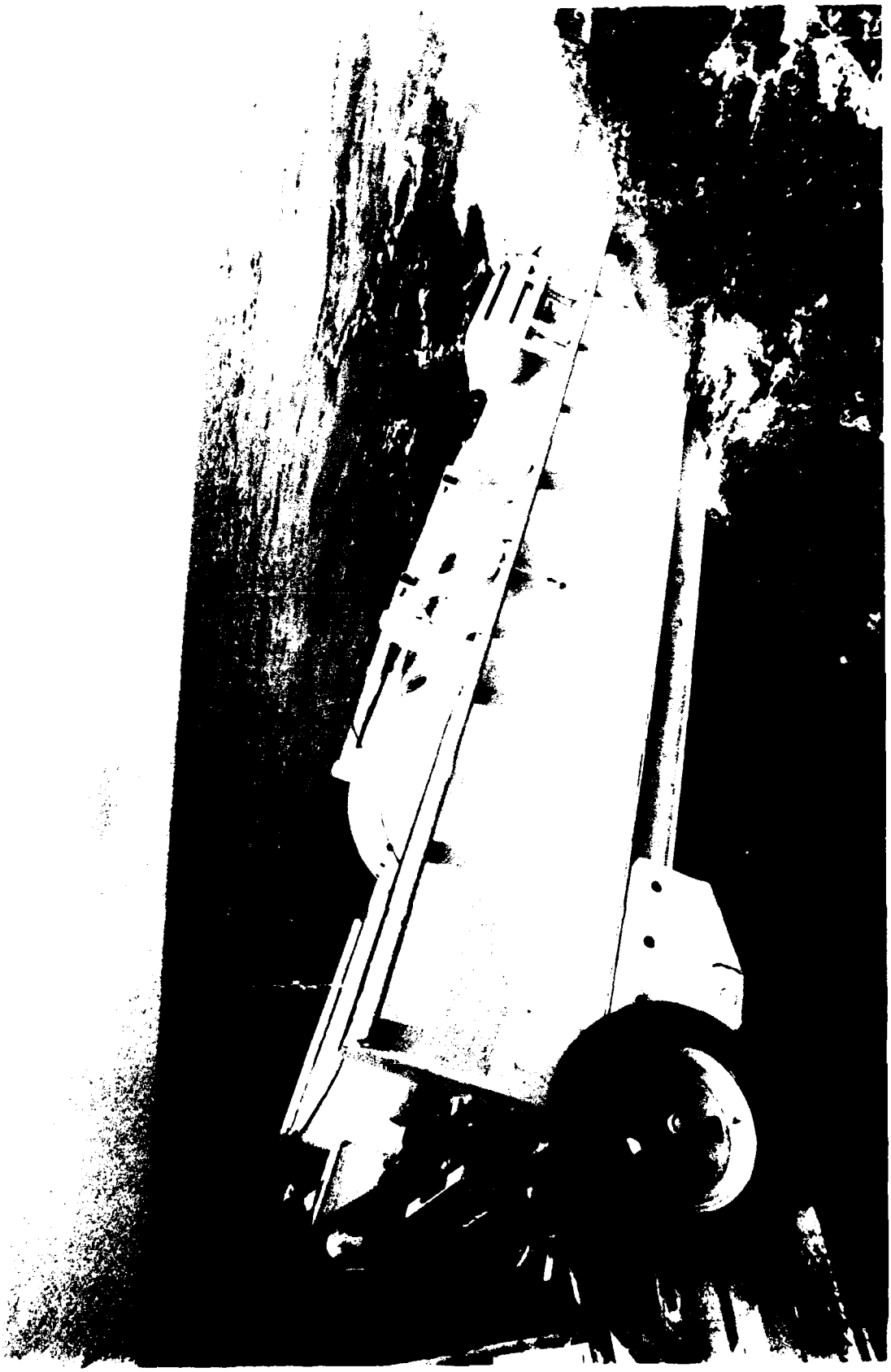

Figure 9. Launch ramp.

operated using a manual control box. With this custom box, the pump can be started and stopped and the launcher cable speed controlled. The control box is connected to a portable electrical cable to permit the operator to walk around the deck while controlling the AUSS launch and recovery.

EARS HANDLING SYSTEM

The EARS handling system includes a launcher, tow cable, and winch with HPU. The EARS submersible is lowered over the stern of the ship, into the water, and towed with the cable. When not in use, the towfish is pulled up into a saddle that is part of the launcher.

The EARS launcher (figure 10) is a custom AUSS design. It includes a frame assembly, saddle, and davit with articulating sheave. The launcher frame is a steel weldment with side rails and a hinged platform. The platform can be used for towfish maintenance or when attaching/detaching the tow cable. To facilitate launch and recovery, the launcher is secured to the ship's deck so that it extends over the transom several feet. The saddle, davit, and winch are all bolted to the frame. The davit is designed be rotated 360 degrees and includes a small hand winch so it can be used to place the towfish on the ship's deck.

The electromechanical tow cable is used as purchased from Endeco Incorporated. It is a 500-foot-long HAIRED FAIRED™ cable with stainless steel overbraid. The Haired Fairing is used to reduce both cable strumming and drag.

The EARS winch with remote HPU is a SEA-MAC model SM 90DH. The winch has been modified by NRaD to increase the drum capacity. The HPU is powered by an optional 15-hp Lombardini model 10LD400-2 diesel engine and is connected to the winch with hoses. This HPU can also be used as a backup to the vehicle launcher HPU by rerouting the hydraulic hoses and connecting them to that system.

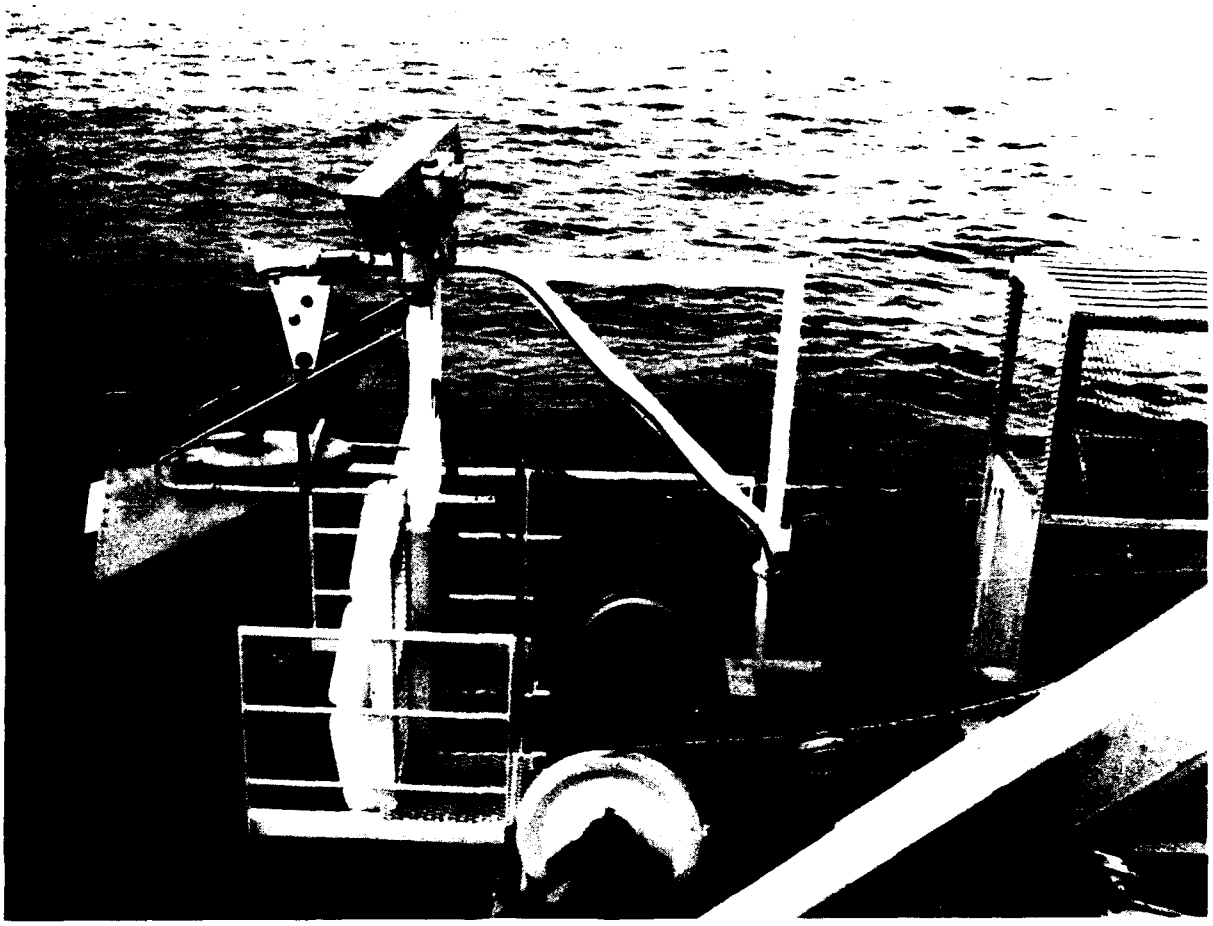

Figure 10. EARS launcher.

BIBLIOGRAPHY

Acoustic Systems, Inc. 1992. "Definition of the Advanced Unmanned Search System (AUSS) Sonar Characteristics." NRaD TN 1704 (Sep). Naval Command, Control and Ocean Surveillance Center, RDT&E Division, San Diego, CA.*

Bryant, S. B. 1979. "Advanced Unmanned Search System (AUSS) Performance Analysis." NOSC TR 437 (Jul). Naval Ocean Systems Center, San Diego, CA.

Cooke, M. W. 1992. "Advanced Unmanned Search System (AUSS)." NRaD TD 2348 (Dec). Naval Command, Control and Ocean Surveillance Center, RDT&E Division, San Diego, CA.

Endicott, D. L. Jr., and G. R. Kuhl. 1992. "Fast Area Search System (FASS): Feasibility Study Appendices." NRaD TN 1703 (Sep). Naval Command, Control and Ocean Surveillance Center, RDT&E Division, San Diego, CA.*

Endicott, D. L. Jr., and G. R. Kuhl. 1992. "The Fast Area Search System (FASS): A Feasibility Study." NRaD TR 1526 (Sep). Naval Command, Control and Ocean Surveillance Center, RDT&E Division, San Diego, CA.

Grace, D. R. 1992. "Brownian Reber Search Theory for the Advanced Unmanned Search System." NRaD TR 1534 (Oct). Naval Command, Control and Ocean Surveillance Center, RDT&E Division, San Diego, CA.

Gunderson, C. R. 1978. "Advanced Unmanned Search System (AUSS), Preliminary Search Systems Analysis." NOSC TR 375 (Dec). Naval Ocean Systems Center, San Diego, CA.

Held, J. L. 1992. "Automatic Hovering Algorithms for the Advanced Unmanned Search System." NRaD TR 1535 (Sep). Naval Command, Control and Ocean Surveillance Center, RDT&E Division, San Diego, CA.

Held, J. L. and H. B. McCracken. 1993. "Automatic Transit Algorithms for the Advanced Unmanned Search System (AUSS)." NRaD TR 1536 (Jan). Naval Command, Control and Ocean Surveillance Center, RDT&E Division, San Diego, CA.

Jones, H. V. 1992. "Advanced Unmanned Search System (AUSS) Description." NRaD TR 1528 (Nov). Naval Command, Control and Ocean Surveillance Center, RDT&E Division, San Diego, CA.

* NRaD Technical Notes (TNs) are working documents and do not represent an official policy statement of the Naval Command, Control and Ocean Surveillance Center (NCCOSC), RDT&E Division (NRaD). For further information, contact the author(s).

Keil, T. J. 1992. "Advanced Unmanned Search System (AUSS) Deep Ocean Floor Search Performance Computer Model: Executive Summary." NRaD TN 1702 (Sep). Naval Command, Control and Ocean Surveillance Center, RDT&E Division, San Diego, CA.*

Kono, M. E. 1992. "Surface Computer System Architecture for the Advanced Unmanned Search System (AUSS)." NRaD TR 1538 (Dec). Naval Command, Control and Ocean Surveillance Center, RDT&E Division, San Diego, CA.

Mackelburg, G. R., S. J. Watson, and W. D. Bryan. 1992. "Advanced Unmanned Search System (AUSS) Acoustic Communication Link Development." NRaD TR 1531 (Nov). Naval Command, Control and Ocean Surveillance Center, RDT&E Division, San Diego, CA.

McCracken, H. B. 1992. "Advanced Unmanned Search System (AUSS) Supervisory Command, Control and Navigation." NRaD TR 1533 (Nov). Naval Command, Control, and Ocean Surveillance Center, RDT&E Division, San Diego, CA.

Osborne, P. D., and C. C. Geurin. 1992. "Advanced Unmanned Search System (AUSS) Surface Navigation, Underwater Tracking, and Transponder Network Calibration." NRaD TR 1532 (Oct). Naval Command, Control and Ocean Surveillance Center, RDT&E Division, San Diego, CA.

Rasmussen, M. E. 1992. "Advanced Unmanned Search System (AUSS) Battery Monitor/Charging Systems." NRaD TR 1539 (Sep). Naval Command, Control and Ocean Surveillance Center, RDT&E Division, San Diego, CA.

Schwager, M., and J. Stangle (SAIC). 1992. "Advanced Unmanned Search System (AUSS) Software Description: Vol I Surface SW/Vol II Vehicle SW." NRaD TN 1705 (Dec). Naval Command, Control and Ocean Surveillance Center, RDT&E Division, San Diego, CA.*

SEACO, Inc. 1992. "Development of the Acoustic Telemetry System." NRaD TD 2336 (Sep). Naval Command, Control and Ocean Surveillance Center, RDT&E Division, San Diego, CA.

Stachiw J. D. 1984. "Graphite-Reinforced Plastic Pressure Hull for the Advanced Unmanned Search System (AUSS) (U)." NOSC TR 999 (Oct). Naval Ocean Systems Center, San Diego, CA.

Stachiw J. D. 1986. "Graphite-Fiber-Reinforced Plastic Pressure Hull Mod 1 for the Advanced Unmanned Search System (AUSS)." NOSC TR 1182 (Dec). Naval Ocean Systems Center, San Diego, CA.

* NRaD Technical Notes (TNs) are working documents and do not represent an official policy statement of the Naval Command, Control and Ocean Surveillance Center (NCCOSC), RDT&E Division (NRaD). For further information, contact the author(s).

Stachiw J. D. 1988. "Graphite-Fiber-Reinforced Plastic Pressure Hull Mod 2 for the Advanced Unmanned Search System (AUSS)." NOSC TR 1245 (Aug). Naval Ocean Systems Center, San Diego, CA.

Uhrich, R. W., J. Walton, and S. J. Watson. 1978. "Portable Test Range and its Application to Side-Looking Sonar." NOSC TR 258 (Jan). Naval Ocean Systems Center, San Diego, CA.

Uhrich, R. W., and S. J. Watson. 1992. "Deep-Ocean Search and Inspection: Advanced Unmanned Search System (AUSS) Concept of Operation." NRaD TR 1530 (Nov). Naval Command, Control and Ocean Surveillance Center, RDT&E Division, San Diego, CA.

Uhrich, R. W., S. J. Watson, and G. R. Mackelburg (Eds.). 1992. "Advanced Unmanned Search System (AUSS) Surface Acoustic Link Description." NRaD TN 1706 (Oct). Naval Command, Control and Ocean Surveillance Center, RDT&E Division, San Diego, CA.*

Vought Corporation. 1992. "Design Analysis and Operations Research for the Advanced Unmanned Search System (AUSS)." NRaD TD 2337 (Sep). Naval Command, Control and Ocean Surveillance Center, RDT&E Division, San Diego, CA.

Walton, J. 1992. "Advanced Unmanned Search System (AUSS) At-Sea Development Test Report." NRaD TR 1537 (Dec). Naval Command, Control and Ocean Surveillance Center, RDT&E Division, San Diego, CA.

Walton, J. 1992. "Advanced Unmanned Search System (AUSS) Testbed: FY 1987 Development Testing." NRaD TR 1525 (Nov). Naval Command, Control and Ocean Surveillance Center, RDT&E Division, San Diego, CA.

Walton, J. 1992. "Advanced Unmanned Search System (AUSS) Testbed: Search Demonstration Testing." NRaD TR 1527 (Nov). Naval Command, Control and Ocean Surveillance Center, RDT&E Division, San Diego, CA.

Walton, J. 1992. "Evolution of a Search System: Lessons Learned with the Advanced Unmanned Search System." NRaD TR 1529 (Nov). Naval Command, Control and Ocean Surveillance Center, RDT&E Division, San Diego, CA.

* NRaD Technical Notes (TNs) are working documents and do not represent an official policy statement of the Naval Command, Control and Ocean Surveillance Center (NCCOSC), RDT&E Division (NRaD). For further information, contact the author(s).

REPORT DOCUMENTATION PAGE

Form Approved
OMB No. 0704-0188

Public reporting burden for this collection of information is estimated to average 1 hour per response, including the time for reviewing instructions, searching existing data sources, gathering and maintaining the data needed, and completing and reviewing the collection of information. Send comments regarding this burden estimate or any other aspect of this collection of information, including suggestions for reducing this burden, to Washington Headquarters Services, Directorate for Information Operations and Reports, 1215 Jefferson Davis Highway, Suite 1204, Arlington, VA 22202-4302, and to the Office of Management and Budget, Paperwork Reduction Project (0704-0188), Washington, DC 20503.

1. AGENCY USE ONLY *(Leave blank)*	2. REPORT DATE November 1992	3. REPORT TYPE AND DATES COVERED Final
4. TITLE AND SUBTITLE ADVANCED UNMANNED SEARCH SYSTEM (AUSS) DESCRIPTION		5. FUNDING NUMBERS AN: DN588521 PE: 0603713N PROJ: S0397
6. AUTHOR(S) H. V. Jones		
7. PERFORMING ORGANIZATION NAME(S) AND ADDRESS(ES) Naval Command, Control and Ocean Surveillance Center (NCCOSC) RDT&E Division (NRaD) San Diego, CA 92152–5000		8. PERFORMING ORGANIZATION REPORT NUMBER NRaD TR 1528
9. SPONSORING/MONITORING AGENCY NAME(S) AND ADDRESS(ES) Assistant Secretary of the Navy Research and Development Washington, DC 20350		10. SPONSORING/MONITORING AGENCY REPORT NUMBER
11. SUPPLEMENTARY NOTES		
12a. DISTRIBUTION/AVAILABILITY STATEMENT Approved for public release; distribution is unlimited.		12b. DISTRIBUTION CODE

13. ABSTRACT *(Maximum 200 words)*

This report describes the Advanced Unmanned Search System (AUSS), a self-propelled submersible designed to perform broad-area search and contact evaluation to depths of 20,000 feet. The system is based on a single, untethered, semiautonomous, supervisory controlled vehicle. Without the burden of a cable, or the need to place a second vehicle in the water for target investigation, this system can reduce present search operation times by an order of magnitude.

14. SUBJECT TERMS Advanced Unmanned Search System (AUSS)			15. NUMBER OF PAGES 35
			16. PRICE CODE
17. SECURITY CLASSIFICATION OF REPORT UNCLASSIFIED	18. SECURITY CLASSIFICATION OF THIS PAGE UNCLASSIFIED	19. SECURITY CLASSIFICATION OF ABSTRACT UNCLASSIFIED	20. LIMITATION OF ABSTRACT SAME AS REPORT

21a. NAME OF RESPONSIBLE INDIVIDUAL	21b. TELEPHONE (Include Area Code)	21c. OFFICE SYMBOL
H. V. Jones	(619) 553-1872	Code 941