AD-A254 895

(1)

STRUCTURED ANALYSIS/DESIGN

LSA TASK 402

EARLY FIELDING ANALYSIS

SUBTASK 402.2.2
SOURCES OF MANPOWER AND PERSONNEL SKILLS

APJ 966-258

DTIC
ELECTE
SEP 03 1992
S A D

APJ

MILITARY & SCIENTIFIC RESEARCH

AMERICAN POWER JET CO. RIDGEFIELD N.J.

92-24583

92 9 02 280

025950 6388

is document has been approved
public release and sale; its
tribution is unlimited.

SECURITY CLASSIFICATION OF THIS PAGE

REPORT DOCUMENTATION PAGE

Form Approved OMB No. 0704-0188

1a. REPORT SECURITY CLASSIFICATION UNCLASSIFIED	1b. RESTRICTIVE MARKINGS
2a. SECURITY CLASSIFICATION AUTHORITY	3. DISTRIBUTION/AVAILABILITY OF REPORT
2b. DECLASSIFICATION/DOWNGRADING SCHEDULE	UNLIMITED
4. PERFORMING ORGANIZATION REPORT NUMBER(S)	5. MONITORING ORGANIZATION REPORT NUMBER(S)
6a. NAME OF PERFORMING ORGANIZATION AMCCOM, Army 6b. OFFICE SYMBOL (If applicable) AMSMC-MAE-EA	7a. NAME OF MONITORING ORGANIZATION
6c. ADDRESS (City, State, and ZIP Code) Rock Island Arsenal Rock Island, IL 61299-6000	7b. ADDRESS (City, State, and ZIP Code)
8a. NAME OF FUNDING/SPONSORING ORGANIZATION 8b. OFFICE SYMBOL (If applicable)	9. PROCUREMENT INSTRUMENT IDENTIFICATION NUMBER
8c. ADDRESS (City, State, and ZIP Code)	10. SOURCE OF FUNDING NUMBERS PROGRAM ELEMENT NO. / PROJECT NO. / TASK NO. / WORK UNIT ACCESSION NO.

11. TITLE (Include Security Classification) Structured Analysis and Structured Design for the Logistic Support Analysis (LSA) Tasks, LSA Subtask 402.2.2, "Sources of Manpower and Personnel Skills", APJ 966-258).

12. PERSONAL AUTHOR(S)
DUCLOS, RONALD SHEPHERD, NED kmk

13a. TYPE OF REPORT	13b. TIME COVERED	14. DATE OF REPORT (Year, Month, Day)	15. PAGE COUNT
FINAL	FROM _____ TO _____	Jan 1990	64

16. SUPPLEMENTARY NOTATION

17. COSATI CODES			18. SUBJECT TERMS (Continue on reverse if necessary and identify by block number)
FIELD	GROUP	SUB-GROUP	STRUCTURED ANALYSIS, STRUCTURED DESIGN, LOGISTIC SUPPORT ANALYSIS, LSA, DATA FLOW DIAGRAMS, DFDs, PROCESSES, DATA FLOWS, DATA STORES, EXTERNAL over

19. ABSTRACT (Continue on reverse if necessary and identify by block number)

This report consolidates the Structured Analysis and Structured Design for the Logistic Support Analysis (LSA) Tasks. Included are the Data Flow Diagrams (DFDs) for LSA Subtask 402.2.2, "Sources of Manpower and Personnel Skills", and the corresponding descriptions of the processes, data flows, data stores, and external entities identified on each DFD. The DFDs are further developed into procedures which identifies how to use the data to carry out the processes and accomplish the LSA Subtask. Venture Evaluation Review Technique (VERT) Batch Input files are also provided to assist as tools, giving both technical and managerial aspects of a task.

20. DISTRIBUTION/AVAILABILITY OF ABSTRACT XX UNCLASSIFIED/UNLIMITED ☐ SAME AS RPT ☐ DTIC USERS	21. ABSTRACT SECURITY CLASSIFICATION UNCLASSIFIED
22a. NAME OF RESPONSIBLE INDIVIDUAL NED SHEPHERD	22b. TELEPHONE (Include Area Code) (309) 782-2479 22c. OFFICE SYMBOL AMSMC-MAE-EA

DD Form 1473, JUN 86 *Previous editions are obsolete.* SECURITY CLASSIFICATION OF THIS PAGE

18. SUBJECT TERMS - continued:
ENTITIES, PROCEDURES, VENTURE EVALUATION REVIEW TECHNIQUE, VERT, PROCESS FLOWS, OVERALL SYSTEMS DEVELOPMENT PROCESS, AND SOURCES OF MANPOWER AND PERSONNEL SKILLS.

APJ 966-258

STRUCTURED ANALYSIS/DESIGN

LSA TASK 402

EARLY FIELDING ANALYSIS

SUBTASK 402.2.2

SOURCES OF MANPOWER AND PERSONNEL SKILLS

under

CONTRACT DAAA21-86-D-0025

Accesion For	
NTIS CRA&I	
DTIC TAB	
Unannounced	
Justification	
By	
Distribution /	
Availability Code	
Dist	Avail and / or Special
A-1	

for

HQ US AMCCOM

INTEGRATED LOGISTIC SUPPORT OFFICE
AMSMC-LSP
ROCK ISLAND, IL

by

AMERICAN POWER JET COMPANY

RIDGEFIELD, NJ — FALLS CHURCH, VA

WILLIAMSBURG, VA — ST. LOUIS, MO

January 1990

DTIC QUALITY INSPECTED 3

FOREWORD

APJ, under contract to HQs, AMCCOM, has initiated the automation of the LSA Tasks (MIL-STD-1388-1) and the assessment of the ILS elements (AR 700-127). A major goal is to unify military and contractor approach to the performance of ILS and LSA.

Detailed to meet all requirements of ILS and LSA, the automated process will continue to provide full flexibility in selecting tasks and elements to be addressed at each life cycle stage. A major advantage of this approach is to insure that the application of each task element is consistent with prescribed Army policies and procedures.

This report consolidates the Structured Analysis and Structured Design under one cover for the respective LSA Tasks. Structured Analysis provides a logical model of the method to perform an LSA Task. This logical model facilitates the development of a Structured Design that provides the detailed procedures to perform the analysis. Both the logical model and detailed procedures are used to develop the application software programs which will be provided to Government and contractor personnel to assist in the performance of the LSA Task.

Included in this report are the Data Flow Diagrams (DFDs) for LSA Subtask 402.2.2, "Sources of Manpower and Personnel Skills" and the corresponding descriptions of the processes, data flows, data stores, and external entities identified on each DFD (Annex B). In addition the DFDs are further developed into step-by-step procedures (Annex C) which identifies how to use the data to carry out the processes which ultimately lead to accomplishing the LSA Subtask.

To assist managers in planning and controlling this task, Venture Evaluation Review Technique (VERT) Batch Input files are provided (Annex D). These VERT tools provide government agencies with complete packages, to give contractors, that cover both technical and managerial aspects of a task. This approach establishes a standardized form of communication and management between contractors performing the task and government personnel reviewing the task.

To view this work in context, Annex E of this report also presents a brief overview of Structured Analysis and its place in the overall systems development process. The overview and certain portions of the introductory text are repeated verbatim in every report in this series so that each report is free standing.

TABLE OF CONTENTS

TITLE	PAGE
Purpose	1
Background	1
Scope	1
LSA Subtask 402.2.2 Description	2
Approach	2
Structured Analysis for LSA Subtask 402.2.2 Sources Of Manpower and Personnel Skills	3
VERT Diagrams	5
ANNEX A: LSA Task 402 Description Early Fielding Analysis	A-1
ANNEX B: LSA Subtask 402.2.2 - Sources of Manpower and Personnel Skills Flow Diagrams and Data Dictionary	B-1
ANNEX C: LSA Subtask 402.2.2 - Sources of Manpower and Personnel Skills Structured Design	C-1
ANNEX D: LSA Subtask 404.2.2 - Sources of Manpower and Personnel Skills VERT Batch Input Files	D-1
ANNEX E: Structured Systems Analysis - Fundamentals	E-1

LIST OF FIGURES

FIGURE NO.	TITLE	PAGE
1	Structured Analysis and Structured Systems Design Organization	E-5
2	Standard DFD Symbol Definitions	E-6

INTRODUCTION

PURPOSE

The purpose of this report series is to present the results of the APJ Structured Analysis/Design under Contract DAAA21-86-D-0025 for coordination with the AMCCOM Program Manager prior to in-depth programming of ILS and LSA functions and processes. LSA Task 402 "Early Fielding Analysis", ("LSA Subtask 402.2.2 "Sources of Manpower and Personnel Skills")is addressed in this report.

BACKGROUND

The Department of the Army has a requirement for management control over contractor and Government agency response to the requirements of AR 700-127, "Integrated Logistic Support", and MIL-STD-1388-1, "Logistic Support Analysis". HQs AMCCOM has initiated action to structure each of the LSA tasks, the assessment of each ILS element, the form of the results, and the detailed processes to insure consistency with current Army policies, procedures, and techniques.

This approach (undertaken by AMCCOM and APJ) will insure uniformity in efforts and products, reproducibility of analyses, and a well-defined structure which can be coordinated among all participants in the logistic process to arrive at common understanding and procedures.

SCOPE

This report summarizes the results of the Structured Analysis of the identification of LSA Task 402 "Early Fielding Analysis", LSA Subtask 402.2.2, "Sources of Manpower and Personnel Skills" and presents the associated Data Flow Diagrams (DFDs) developed from the Structured Analysis and the corresponding procedures developed in the Structured Design. The portions of the Data Dictionary relating to the DFDs for this LSA Subtask includes the labels, names, descriptions, processes, data flows, data stores, and external entities. (The Data Dictionary is a "living document" that evolves through the analysis and design process).

The Data Dictionaries developed for each of the individual LSA Subtasks are integrated together into a Master Data Dictionary. Integration of the individual Data Dictionary involves the combination of simular Data Flows, Data Stores, and

External Entities. The resulting Master Data Dictionary may well contain some minor differences from the definitions that appear in the report. All processes, and of course, the content of the structured design will remain identical.

The Structured Design portion of this report develops the processes and data flows developed in the DFDs into procedures which are used to accomplish the LSA Tasks. The DFDs provide the method and the Design implements it, by formulating a guide for programmers to write software applications.

This report presents a brief overview of Structured Analysis and its place in the overall systems design process to assist the reader who may not be fully briefed on the symbols and conventions used. It is supported by Annex D, which defines each element in Structured Analysis.

LSA SUBTASK 402.2.2 DESCRIPTION

The Subtask "Sources of Manpower and Personnel Skills" addresses the Manpower and Personnel impact of the deployment of the new system/equipment. It identifies where the necessary people and skills will come from and what the impact will be on fielded system/equipments when the new system is fielded. Another aspect of the task is to determine the new skills and training requirements needed for maintenance and operational personnel required in fielding and operating the new system/equipment.

This task provides the processes to perform the analysis and methods required to develop and extract data and information needed - including the training requirements and sources of data for use in qualifying manpower for servicing, operating and repairing the new system/equipment.

The LSA Task Description with associated tasks inputs and outputs is extracted from MIL-STD-1388-1A and is included as Annex A.

APPROACH

The APJ approach to Structured Analysis and Structure Design of an LSA Subtask is:

1. Scope the Subtask defined in MIL-STD-1388-1A with the overall task and determine its relationship with other LSA Tasks.

2. Review all pertinent documentation (e.g., AR's, MIL-STDs, etc.) applicable to the specific topic.

3. Prepare the Top Level DFDs in context of the Subtask, and develop lower level DFDs to further quantity any complex process identified in the top level DFD.

4. Complete the Data Dictionary portion of the Analysis by describing all processes, data flows, data stores and external entities.

5. Apply staff experience in logistic support analysis to assure that the topic has been exhaustively addressed.

6. From the completed DFDs prepare the step by step procedures that form the structured design.

7. Review Data Item Description and other applicable material to develop output reports.

8. If required revise DFDs and Data Dictionary based on preparation of detailed procedures.

9. Validate results in discussions with Army activities and personnel directly involved in the applicable or related LSA tasks.

NOTE: Structured Analysis and preparation of Data Flow Diagrams (DFDs) was further assisted by the application of Structured Analysis software. Licensed by Index Technology Corporation, Excelerator provides for automated tracking of names, labels, descriptions, multiple levels of detail in the data flow diagrams, and industry standards in symbols and diagramming practices.

STRUCTURED ANALYSIS FOR LSA SUBTASK 402.2.2 - SOURCES OF MANPOWER AND PERSONNEL SKILLS

The Data Flow Diagram is a tool that shows the flow of data, (i.e., data flows from sources) and is processed by activities to produce intermediate or final products.

The DFD provides a useful and meaningful partitioning of a system from the viewpoint of identification and separation of all functions, actions, or processes so that each can be introduced, changed, added, or deleted with minimal disruption of the overall program, i.e., it emphasizes the underlying concept of modularity and identifiable transformations of data into actionable products.

A series of three (3) DFDs have been developed to structure the LSA subtask relative to operations and other support functions:

1.	402.2.2	Analysis of Manpower and Personnel Resources Requirements
2.	402.2.2.1A	Analysis Existing Manpower and Personnel Resources
3.	402.2.2.2A	Analysis Impact Using Existing Manpower Sources

Each DFD is keyed to the specific task through the identification number assigned in the lower right hand box. The Alpha codes indicate the level of indenture or explosion below the top level, i.e.,:

Top Level.....LSA DFD 402.2.2
First Indenture.....LSA DFD 402.2.2.1A

Each DFD makes reference to the basic LSA task it addresses, as well as the level of indenture (explosion) of the DFD. For example, the first or top level DFD, "402.2.2", refers to the section in MIL-STD-1388-1A which describes the review items. One of the processes (bubbles) on the top level diagram (402.2.2.1) is expanded and identified as "402.2.2.1A", a second level. (Alpha "A" indicates the second level).

Four standard symbols are used in the drawing of a DFD (see Annex D - Figure 1).

A copy of each DFD is presented in Annex B, accompanied by the Data Dictionary process elements. Each entry made in the DFDs has a corresponding entry in the Data Dictionary.

This presents only those Data Dictionary entries necessary for an understanding of the overall concept and a look at the supporting details of the structured analysis methodology. To facilitate review of the diagrams, data flows processes, and data store descriptions are provided.

VERT DIAGRAMS

The Venture Evaluation Review Technique (VERT) was developed as a network analysis technique to facilitate management decision making. It allows systematic planning and control of programs and enables managers to find solutions to real life managerial problems. The VERT Diagrams and Batch Input Files for this task can be found in Annex D. In order to understand how these Input Files were developed, a brief discussion of the methodology used is provided. The same explanation is repeated verbatim in every report.

ANNEX A

LSA TASK 402
COMBAT RESOURCE REQUIREMENT

ANNEX A
LSA TASK 402
COMBAT RESOURCE REQUIREMENT 1/

402.1 PURPOSE. To determine the preferred support system alternative(s) for each system/equipment alternative and to participate in alternative system trade-offs to determine the best approach (support, design, and operation) which satisfies the need with the best balance between cost, schedule, performance, readiness, and supportability.

402.2 TASK DESCRIPTION

402.2.2 Analyze existing manpower and personnel sources to determine sources to obtain the required manpower and personnel for the new system/equipment. Determine the impact on existing operational systems from using the identified sources for manpower and personnel.

1/ Abstracted verbatim from MIL-STD-1388-1A, April 11, 1983, Pages 36-37.

ANNEX B

LSA SUBTASK 402.2.2
DATA FLOW DIAGRAMS & DATA FLOW DICTIONARY

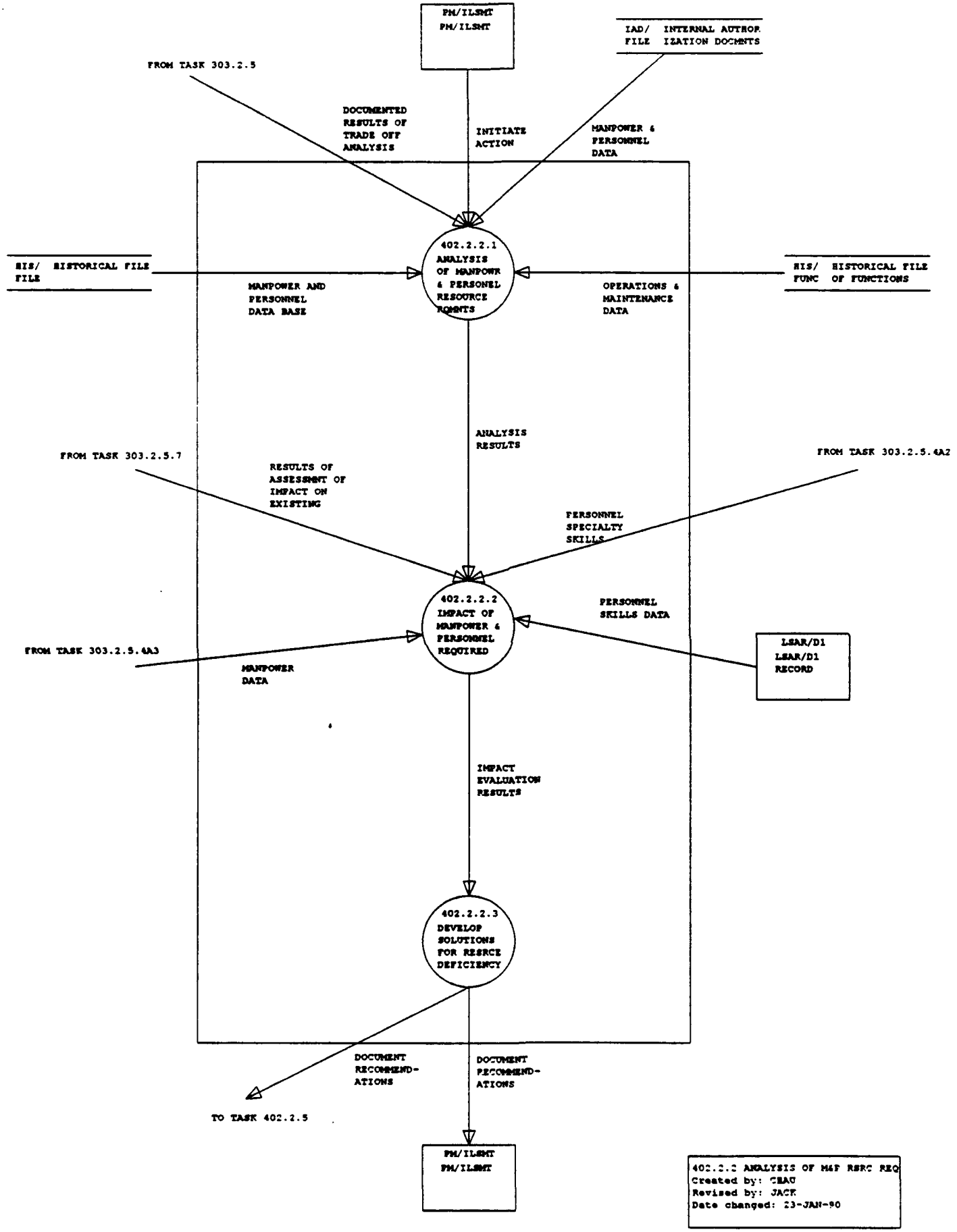
PM/ILSMT
PM/ILSMT
IAD/ FILE
INTERNAL AUTHOR IZATION DOCMNTS
FROM TASK 303.2.5
DOCUMENTED RESULTS OF TRADE OFF ANALYSIS
INITIATE ACTION
MANPOWER & PERSONNEL DATA
402.2.2.1
ANALYSIS OF MANPOWR & PERSONEL RESOURCE RQMNTS
HIS/ FILE
HISTORICAL FILE
MANPOWER AND PERSONNEL DATA BASE
OPERATIONS & MAINTENANCE DATA
HIS/ FUNC
HISTORICAL FILE OF FUNCTIONS
ANALYSIS RESULTS
FROM TASK 303.2.5.7
RESULTS OF ASSESSMNT OF IMPACT ON EXISTING
FROM TASK 303.2.5.4A2
PERSONNEL SPECIALTY SKILLS
402.2.2.2
IMPACT OF MANPOWER & PERSONNEL REQUIRED
PERSONNEL SKILLS DATA
FROM TASK 303.2.5.4A3
MANPOWER DATA
LSAR/D1
LSAR/D1 RECORD
IMPACT EVALUATION RESULTS
402.2.2.3
DEVELOP SOLUTIONS FOR RESRCE DEFICIENCY
DOCUMENT RECOMMEND-ATIONS
DOCUMENT RECOMMEND-ATIONS
TO TASK 402.2.5
PM/ILSMT
PM/ILSMT
402.2.2 ANALYSIS OF M&P RSRC REQ
Created by: CHAU
Revised by: JACK
Date changed: 23-JAN-90

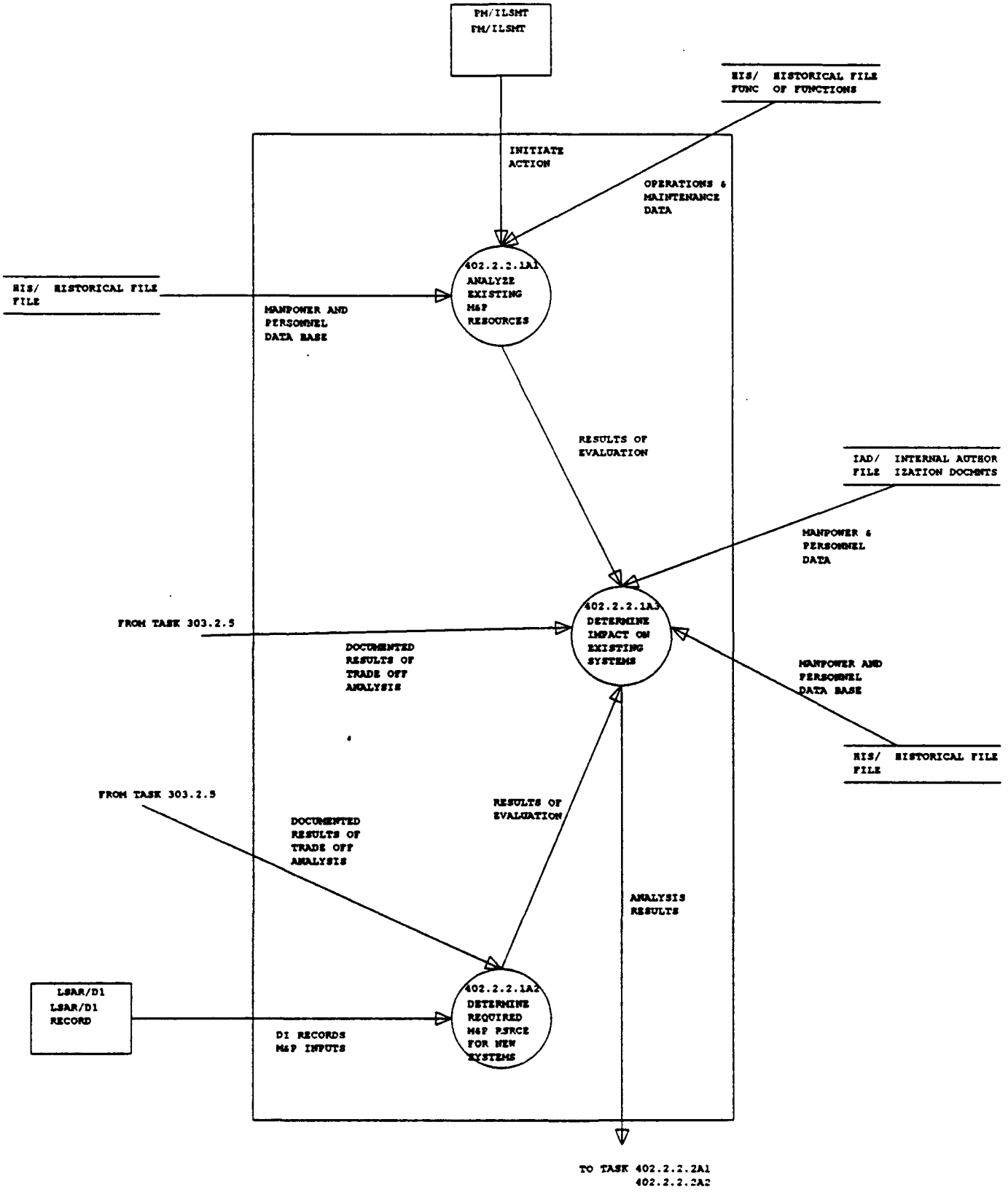

402.2.2.1A ANAL EXIS M&P RESRCE
Created by: CRAU
Revised by: JACK
Date changed: 23-JAN-90

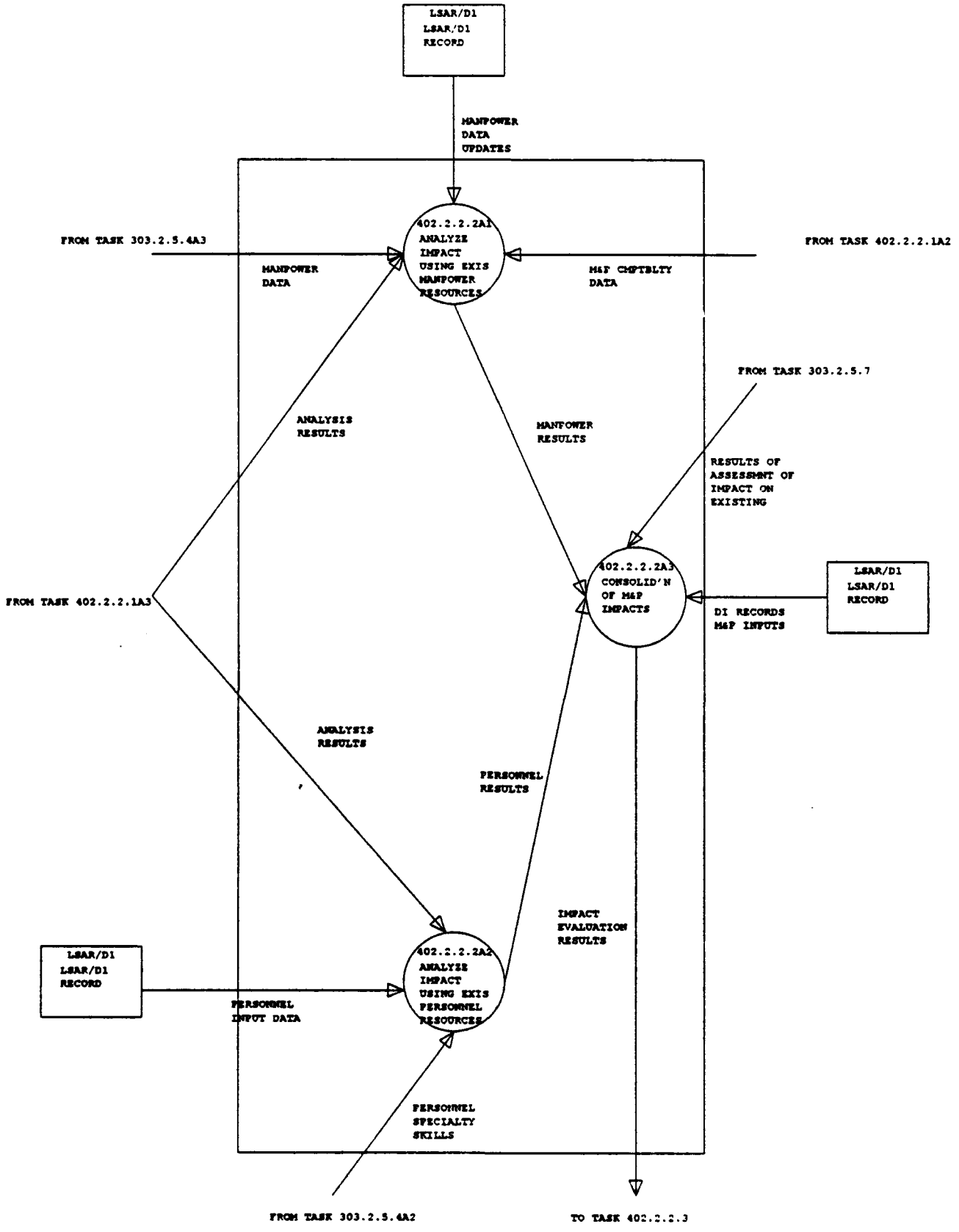

402.2.2.2A ANAL IMP EXIS M&P RES
Created by: CHAU
Revised by: JACK
Date changed: 23-JAN-90

Name	Label	Description
402.2.2.1	ANALYSIS OF MANPOWR & PERSONEL RESOURCE RQMNTS	Determine those manpower and personnel parameters that are required to operate and support the new system/equipment.This identifies the number of individuals along with the identification of skills necessary to satisfy all logistic requirements of the new system/equipment. Source of Data: 1. Program Managers/Integrated Support Management Team. 2. Internal Authorized Document File (including QQPRI). 3. Historical File (Manpower and Personnel Data). 4. Subtask 303.2.5 Manpower and Personnel Tradeoffs. 5. Historical Functions File.
402.2.2.1A1	ANALYZE EXISTING M&P RESOURCES	Determine the number of available skills in each specialty and determine the total demand on existing individuals currently available. Source of Data: 1. HIS/FILE Historical File (Manpower and Personnel Data - including applicable TO & Es). 2. HIS/FUNC Historical File of Functions. 3. Program Managers/Integrated Support Management Team.
402.2.2.1A2	DETERMINE REQUIRED M&P RSRCE FOR NEW SYSTEMS	Evaluate each new system M & P requirements to insure that they are compatible with the operational and Support Concepts required to fullfill the identified operational needs. Source of Data: 1. Subtask 303.2.5 Manpower and Personnel tradeoffs. 2. LSAR/D1 Records (Manpower and Personnel Records).
402.2.2.1A3	DETERMINE IMPACT ON EXISTING SYSTEMS	Based on historical data for a similar system/equipment, identify those areas where changes and/or shortcomings exist in current operations and support. Parametrics have a direct influence on Manpower and Personnel Readiness. Source of Data: 1. HIS/FILE Historical File and Personnel Trade Offs. 2. Subtask 303.2.5 Manpower and Personnel Tradeoffs. 3. IAD/FILE Initial Authorization Document. 4. Sub-sub Task 402.2.2.1A2 Determine Required M & P Resources. 5. Sub-subtask 402.2.2.1A1 - Analyze Existing M & P Resources.
402.2.2.2	IMPACT OF MANPOWER & PERSONNEL REQUIRED	To compare the proposed new system/equipment Manpower and Personnel requirements to those presently available within the Army System. Source of Data: 1. Subtask 303.2.5.7 Life Cycle Assessment. 2. LSAR/D1 Records Personnel & Support Requirements. 3. Subtask 303.2.5.4A2 Personnel Specialty Skills Development. 4. Subtask 303.2.5.4A3 Manpower for System/Equipment Development. 5. Subtask 402.2.2.1 - Analysis of Manpower and Personnel Resource Requirements.

Name	Label	Description
402.2.2.2A1	ANALYZE IMPACT USING EXIS MANPOWER RESOURCES	Using the results of the manpower data from existing systems/equipment, analyze the alternatives that optimizes the use of existing manpower that meets support and operational requirements Source of Data: 1. Subsub Task 303.2.5.4A3 Manpower for Systems Equipment Development. 2. LSAR/D1 Records (Manpower). 3. Subsub Task 402.2.2.1A3 Existing Resources List.
402.2.2.2A2	ANALYZE IMPACT USING EXIS PERSONNEL RESOURCES	Using the results of the Personnel Data from existing systems/equipment, analyze the alternatives that optimizes the use of Personnel that meets support and operational requirements. Source of Data: 1. Subsub Task 303.2.5.4A2 Personnel Specialty Skills Developed. 2. Subsub Task 402.2.2.1A3 Existing Resources List. 3. LSAR/D1 Records Personnel Data.
402.2.2.2A3	CONSOLID'N OF M&P IMPACTS	Consolidate identified data to determine the plus and minus in the existing resources that can be available to support the new system/ equipment. Source of Data: 1. Subsub Task 303.2.5.7 Assessment Impact on Existing Weapons. 2. Subsub Task 402.2.2.2A1 Analyze Impact Using Existing Manpower Resources. 3. Subtask 402.2.2.2A2 Analyze Impact Using Existing Personnel Resources. 4. LSAR/D1 Records (Personnel and Support Requirements).
402.2.2.3	DEVELOP SOLUTIONS FOR RESRCE DEFICIENCY	Identify the necessary Manpower and Personnel data to minimize any adverse impact on resource requirements created by the introduction of the new system/equipment, such as, 1. Shortage of certain skills. 2. Requirement to increase recruiting. 3. Conduct additional on-the-job training at unit levels. Source of Data: Subtask 402.2.2.2 Impact of M & P Required

Name	Label		Description
ANAL/RES	ANALYSIS RESULTS	Purpose:	This data identifies the requirements needed to evaluate the manpower and personnel parameters and/or constraints that may input the design and operational requirements. This data is extracted from: 1. Data bases necessary to support the depth of the analytical requirements. 2. Data pertaining to "Baseline" or existing systems in use and a part of this analytical process, ie, skills, grades, number of personnel, TOE's, manhours, tasks, operations and costs. 3. Skills shortages, on-the-job training and recruiting emphasis.
		Source of Data:	Subtask 402.2.2.1A3 Analysis of Manpower and Personnel Resource Reqmts.
DI/M&P/INPUT	MANPOWER & PERSONNEL INPUTS	Purpose:	The data provides identified equipment descriptions on what must be done and by whom, in order to accomplish the system/equipments intended mission. This data provides: a. Justification for support equipment. b. Procedure for determining quantities of support equipment. c. The basis for recommending specific tasks for the training Plan Development. d. Uapdates for QQPRI, TOE's e. Etc..
		Source of Data:	LSAR/DI Record Personnel and Support requirements.
DOC/REC	DOCUMENT RECOMMEND-ATIONS	Purpose:	To provide the analyst the necessary data needed to alert management about serious manpower and/or personnel conditions or situations that could cause detrimental impacts to the new system/equipment. It also contains recommendations to eliminate lesson impacts due to manpower and personnel resource related issues. This data may contain: 1. Design change recommendations. 2. Cost change data. 3. Schedule impact data. 4. Operations impact data/changes. 5. Unique functions.
		Source of Data:	Subtask 402.2.2.3 Develop Recommendations for Resource Deficiencies.

Name	Label	Description	
DOC/RES/TOA	DOCUMENTED RESULTS OF TRADE OFF ANALYSIS	Purpose:	To report results of optimum manpower and/or Personel requirements and characteristics of all system/equipments studied. This data may contain: 1. Manpower costs. 2. Personnel costs. 3. Complete operations and maintenance staffing needs. 4. Special equipment characteristics requiring special skills, training or recruiting emphasis.
		Source of Data:	Subtask 303.2.5 Manpower and Personnel Tradeoffs.
IMP/EVAL/RES	IMPACT EVALUATION RESULTS	Purpose:	Data provides manpower and personnel information used in evaluating the results, conclusions, data analysis and records of manpower and personnel problem areas. This data may contain: 1. Manpower and personnel costs. 2. Staffing needs (Manpower). 3. Personnel requirements (Skills). 4. New specialties required to support the system/equipment. 5. Identify qualitative and quantitative risks envolved with the existing system/equipment as related to manpower and personnel.
		Source of Data:	Subtask 402.2.2.2 Impact of Manpower and Personnel Required.
INIT/ACTION	INITIATE ACTION	Purpose:	Data/action provides guidance, direction, background and reference information to Management, Engineering and Technical Personnel who are engaged in and are responsible for management and development in the U. S. Army Materiel Acquisition Process. Data may also consist of information essential to the start-up or initiation of LSA Tasks, revisions to these tasks and revisions to these tasks as the life cycle progresses and/or the operation of models and/or studies.
		Source of Data:	Program Manager/Integrated Logistics Support Management Team
M&P/DATA	MANPOWER & PERSONNEL DATA	Purpose:	Data contains the selected manpower and personnel documentation that is available pertaining to the existing system/equipment. This data may consist of: 1. Number of people 2. Skills 3. Grade levels 4. Unique requirements 5. TOE's 6. MOS's 7. Etc..
		Source of Data:	Internal Authorization Document File.

Name	Label	Description	
M&P/DATABASE	MANPOWER AND PERSONNEL DATA BASE	Purpose:	Data extracted identifies the system/ equipment parameters required to fullfill the system readiness objectives that are obtained and utilized on existing "Baseline" system/equipment. Examples of what the data contains are: 1. Total number of operators and maintenance personnel. 2. Grade structure. 3. Skill specialty.
		Source of Data:	Historical File.
MAN/DAT	MANPOWER DATA	Purpose:	This data provides the results of manpower requirement studies of existing historical data for "Baseline" systems/equipments. It also provides the manpower requirements based on "Baseline" information available to support the new system/equipment. This data identifies: 1. Operations tasks. 2. Support tasks. 3. Maintenance tasks. 4. Etc..
		Source of Data:	Subtask 303.2.5.4A3 Manpower for System/Equipment Development.
MAN/RES	MANPOWER RESULTS	Purpose:	This data contains the quantitative and qualitative manpower elements involved with the existing system/equipment. This includes current shortages of resources. This data contains: 1. Quantity of people required. 2. Skills of people required. 3. Shortage of people required.
		Source of Data:	Subtask 402.2.2.2A1 Analyze Impact using Existing Manpower Records.
MANP/DAT/UPDATE	MANPOWER DATA UPDATES	Purpose:	To provide the necessary data for manpower development and to identify the various tasks supporting the Manpower disciplines. This data may contain: 1. Operations: a. Number of personnel required to operate the system/equipment. b. Calculated annual manhours per skill specialty. 2. Maintenance: a. Total predicted hours of labor required to support each item of system/equipment components 3. Operations/Maintenance: a. Total predicted hours of labor required to support the system.
		Source of Data:	LSAR/DI Record Personnel and Support Requirements.

Name	Label	Description	
OP/MAINT/DAT	OPERATIONS & MAINTENANCE DATA	Purpose:	Contains those functional requirements that have a direct influence on identifying additional or new Manpower and Personnel requirements. Examples of such data: 1. Types and quantities of personnel required to operate and support the system/equipment. 2. Outlines task times. 3. Provides frequencies of tasks. 4. Provides manpower requirements of tasks. 5. Etc..
		Source of Data:	Historical File of Functions
PER/INP/DAT	PERSONNEL INPUT DATA	Purpose:	To provide the necessary data for personnel requirements development and to identify the various tasks required to accomplish the support needed. This data contains: 1. Maintenance tasks for the new system/equipment. 2. Supply support requirements. 3. Support equipment/personnel requirements. 4. Maintenance levels. 5. Specialty codes. 6. Training requirements. 7. Etc..
		Source of Data:	LSAR/DI Record Personnel and Support Requirements.
PER/SKILLS/DAT	PERSONNEL SKILLS DATA	Purpose:	To provide the necessary data for specific skills development and identify the levels of training needed to support the requirements. This data provides information relative to: 1. Military Occupational Specialty (MOS's) or,. 2. Skill Specialty Evaluation (SSE's).
		Source of Data:	LSAR/DI Record Personnel and Support Requirements.
PERS/RES	PERSONNEL RESULTS	Purpose:	To provide the analyst the quantitative personnel elements involved with the existing system/equipment. This data contains: 1. Skill specialty codes to operate, maintain and support the system/equipment. 2. Personnel grade structure. 3. Total manpower requirements. 4. Support equipment/personnel requirements. 5. Etc..
		Source:	SubTASK 402.2.2.2A2

	Name	Label	Description	
	PERS/SPEC/DAT	PERSONNEL SPECIALTY SKILLS	Purpose:	To provide a list of tasks that must be accomplished along with the time required to perform the task, and then cross reference to the applicable skill required to accomplish the task. This data may contain: 1. Existing personnel resources. 2. Existing skill structures. 3. Needs for modification to existing skill structure due to divisions of labor. 4. Needs to create new skills due to new technologies.
			Source of Data:	Subtask 303.2.5.4A2 Personnel Specialty Skills Development.
	RES/ASSESS/IMPACT/SY	RESULTS OF ASSESSMNT OF IMPACT ON EXISTING SYSTEMS	Purpose:	To provide data to determine what standardized operation and maintenance tasks, currently being accomplished on a similar system with existing manpower and personnel discriptives, can be utilized on the new system/equipment. This data contains: 1. Comparable tasks. 2. Unique tasks. 3. Skill specialty requirements. 4. Maintenance levels. 5. Etc..
			Source of Data:	Subtask 303.2.5.7 Assess Impact on Existing Weapons, Supply, Etc..
	RES/EVAL	RESULTS OF EVALUATION	Purpose:	The compiled manpower and/or personnel factors related to the intended use of the existing requirements and resources available. Examples of factors are: 1. Number of personnel required/available. 2. Skills required/available. 3. Tasks identification, "Baseline" vs. Projections. 4. Training requirements, Existing vs. New. 5. Etc..
			Source of Data:	1. Subtask 402.2.2.1A1 Analyze Existing Manpower and Personnel Resources. 2. Subtask 402.2.2.1A2 DetermineRequired M & P Resources for New System.

	Name	Label	Description
	HIS/FILE	HISTORICAL FILE	Manpower and personnel requirements for a logistically similar system/equipment to that under analysis. Data contains: 1. Total number of operators and maintenance personnel. 2. Grade Structure. 3. Skill specialties. Add description to excelerator.
	HIS/FUNC	HISTORICAL FILE OF FUNCTIONS	This file contains a historical record of operations, maintenance and support functions of items/equipments that can be used as a "Baseline" to forecast or predict the functional requirements and/or characteristics of the development item/equipment.
	IAD/FILE	INTERNAL AUTHOR IZATION DOCMNTS	This is the Army Internal Authorization Document Files that supply the grade, number, and skill specialty of personnel. Types of Authorization Documents: (TOE) - Table of Organization and Equipment for units assigned combat missions. (TDA) - Table of Distribution and Allowance for non-combat units. (MOS) - Military Occupational Specialty for defining manpower specialties and equipment requirements. (QQPRI) - Qualitative, Quantitative ersonnel Requirements Info.

	Name	Label	Description
	LSAR/D1	LSAR/D1 RECORD	The D1 Data Record identifies the training, personnel, support equipment and supply support required to accomplish each task described on the D Data Record. Ref. MIL-STD-1388-2A.
	PM/ILSMT	PM/ILSMT	This external entity is the directive,authority, or other documentation that initiates the requirement for the application of this LSA to a specific system/equipmentdevelopment program at a specified point in its life cycle in accordance with AR 700-127.

ANNEX C

LSA SUBTASK 402.2.2
SOURCES OF MANPOWER & PERSONNEL

ANNEX C

LSA SUBTASK 402.2.2
SOURCES OF MANPOWER & PERSONNEL

PROCESS 402.2.2.1 - Analysis of Manpower and Personnel Resources Requirements

Objective:

To determine the manpower and personnel requirements that are required to operate and support the new system/equipment selected.

Process 402.2.2.1A1 - Analyze Existing Manpower and Personnel Resources

Objective:

To identify and determine the number of available skills in each specialty and also to determine the total demand on existing individuals currently available.

Procedures:

1. Obtain from the Program Manager's Office the results of

   a. LSA Subtask 303.2.5, "Manpower and Personnel Trade -Off Analysis"

   b. LSA Subtask 303.2.6, "Trade-Off between Design, Operations, and Training".

   c. LSAR

   d. Material Fielding Plan

   e. Basis of Issue Plan

   f. Qualitative and Quantitive Personnel Requirements Information

2. Obtain from the Baseline configuration documentation the necessary documentation required to support an existing similar system/equipment, such as, the various skill specialties and the associated grade structure along with the total number of operators and maintenance personnel.

3. Obtain the Manpower and Personnel requirement data that pertains to the existing similar system equipment.

4. On the worksheet screen entitled "Analysis of Existing and Forecasted Resources" for the Baseline System document

   a. The "Baseline" system/equipment selected to compare an average TO&E Manpower and Personnel Requirement to the new system/equipment manpower and personnel requirements.

   b. Under the MOS/Job Series Title, enter the various MOS's/Job Series that pertain to Operator and Crew, Organization, Direct Support, General Support and Depot and the associated Manpower requirements under the heading, Field number.

   c. For Contractor Support, enter a narrative description in the field provided.

REFERENCES:

1. PM/ILS MT
2. Baseline Configuration System Documentation
3. LSAR
4. BOIP/QQPRI
5. Material Fielding Plan
6. TOE

PROCESS 402.2.2.1A2 Determine Required Manpower and Personnel Resources for New Systems

OBJECTIVE:

To evaluate each new system Manpower and Personnel requirements to insure that they are compatible with the operational and support concepts required to fulfill the identified operational needs.

PROCEDURE:

1. Obtain from Process 303.2.5 the documented results of tradeoff analysis for Manpower and Personnel requirements. This data will provide the reviewer the manpower and personnel specialties that affect operations and support costs for the new system/equipment.

2. Obtain the personnel and support requirements from LSAR Record D1. Use this data to determine the necessary training, personnel, support equipment and supply support requirements identified for each maintenance task.

Analysis of Existing and

Forecasted Resources

(402.2.2.1A2)

End Item Name:

Nomenclature:

Part Number:

1. Identify New System/Equipment:

2. Identify Baseline System/Equipment:

3. Baseline and New System/Equipment Manpower and Personnel Requirements

Baseline Requirements Manpower & Personnel	New System/Equipment Requirements Forecasted Manpower & Personnel
Operator/Crew a. Commissioned Officers MOS Number	Operator/Crew a. Commissioned Officers MOS Number
b. Warrant Officers MOS Number	b. Warrant Officers MOS Number
c. Enlisted Personnel MOS Number	c. Enlisted Personnel MOS Number
d. Civil Service Personnel Job Number Series	d. Civil Service Personnel Job Number Series
e. Contract Support Job Number Descr.	e. Contract Support Job Number Descr.

Analyze Existing and

Forecasted Resources

Manpower Resources

(402.2.2.1A2)

(Continued)

- Baseline and New System/Equipment Manpower and Personnel Requirements: (continued)

Baseline Requirements Manpower & Personnel	New System/Equipment Requirements Forecasted Manpower & Personnel
Organization a. Commissioned Officers MOS Number	Organization a. Commissioned Officers MOS Number
b. Warrant Officers MOS Number	b. Warrant Officers MOS Number
c. Enlisted Personnel MOS Number	c. Enlisted Personnel MOS Number
d. Civil Service Personnel Job Series Number	d. Civil Service Personnel Job Series Number
e. Contract Support Job Descr. Job Number	e. Contract Support Job Descr. Job Number

Analyze Existing and

Forecasted Resources

(402.2.2.1A2)

(Continued)

- Baseline and New System/Equipment Manpower and Personnel Requirements: (Continued)

Baseline Requirements Manpower & Personnel	New System/Equipment Requirements Forecast
Direct Support	Direct Support
a. Commissioned Officers MOS Number	a. Commissioned Officers MOS Number
b. Warrant Officers MOS Number	b. Warrant Officers MOS Number
c. Enlisted Personnel MOS Number	c. Enlisted Personnel MOS Number
d. Civil Service Personnel Job Number Series	d. Civil Service Personnel Job Number Series
e. Contract Support Job Number Descr.	e. Contract Personnel Job Number Descr.

Analyze Existing and

Forecasted Resources

402.2.2.1A2

(Continued)

- Baseline and New System/Equipment Manpower and Personnel Requirements: (Continued)

Baseline Requirements Manpower Personnel	New System/Equipment Requirements Forecast
General Support	General Support
a. Commissioned Officers MOS Number	a. Commissioned Officers MOS Number
b. Warrant Officers MOS Number	b. Warrant Officers MOS Number
c. Enlisted Personnel MOS Number	c. Enlisted Personnel MOS Number
d. Civil Service Personnel Job Series Number	d. Civil Service Personnel Job Series Number
e. Contract Personnel Job Descr. Number	e. Contract Personnel Job Descr. Number

Analyze Existing and

Forecasted Resources

402.2.2.1A2

(Continued)

- Baseline and New System/Equipment Manpower and Personnel Requirements: (Continued)

Baseline Requirements Manpower & Personnel	New System/Equipment Requirements Forecast
Depot a. Commissioned Officers MOS Number	Depot a. Commissioned Officers MOS Number
b. Warrant Officers MOS Number	b. Warrant Officers MOS Number
c. Enlisted Personnel MOS Number	c. Enlisted Personnel MOS Number
d. Civil Service Personnel Job Series Number	d. Civil Service Personnel Job Series Number
e. Contract Support Job Descr. Number	e. Contract Support Job Descr. Number

Analyze Existing and

Forecasted Resources

(402.2.2.1A2)

(Continued)

Remarks -

3. Enter the forecasted Manpower and Personnel requirements for Operator and Crew, Organization, Direct Support, General Support, and Depot on to the "Analysis of Existing and Forecasting Resources" worksheet.

4. In the Remarks Section, document any narrative information regarding Manpower and Personnel considerations.

REFERENCES:

1. LSA Task 303.2.5 - Manpower and Personnel Tradeoffs.

2. LSAR/G Record - Skill Evaluation and Justification.

3. LSAR File D1 - Records (Manpower and Personnel Records).

4. AR 611-101 - Manual of Commissioned Officer Military Occupational Specialties.

5. AR 611-112 - Manual of Warrant Officer Military Occupational Specialties.

6. AR 611-201 - Enlisted Military Occupational Specialties.

7. FPM - Supplement 512-1 - Civil Service Commission Job Grade Standard.

8. Contact with manufacturers to determine Contract Support.

PROCESS 402.2.2.1A3 - Determine Impact on Existing Systems

OBJECTIVE:

To identify those areas where changes and/or shortcomings exist in existing operations and support.

PROCEDURES:

1. Consolidate the combined results of evaluation from Process 402.2.2.1A1 and 402.2.2.1A2 to provide the necessary data needed to support the manpower and personnel requirements for existing and new system/equipment.

2. Obtain from the LSA Record D1 the manpower and personnel data necessary to support the various maintenance tasks with the associated justification.

3. List the various MOS/Job Series that are compatible, as applies to the baseline and new system/equipment requirements, and need no further training to support the new system/equipment.

4. To determine the amount of existing Manpower for each MOS/Job Series contact TRADOC, who will provide the total worldwide number.

5. From Process 402.2.2.1A2 determine the addition number of men required to operate and maintain the system MOS/Job Series.

Note: The same MOS/Job Series may appear under (not more than 2) at more than one maintenance support level. (Unit and intermediate

To find the total additional requirement for the system, multiply the total number of TOE's being developed for the system by the manpower required for a single TOE.

6. In the remarks field document any comments concerning the impact on existing systems. (e.g. Deployment of the new system/equipment at Posts, Camps, and Stations that already have the compatible MOS's, which would result in the additional requirement field to be reduced).

PROCESS 402.2.2 - Impact of Manpower and Personnel Required

OBJECTIVE:

To compare the proposed new system/equipment Manpower and Personnel requirements to those presently available with the Army System.

PROCESS 402.2.2.2A1 - Analyze Impact Using Existing Manpower Resources

OBJECTIVE:

To analyze the alternatives that optimize the use of existing manpower to meet support and operational requirements.

PROCEDURES:

1. Obtain data that provides the results of manpower requirements studies on existing historical data for the "Baseline" system/equipment. The data to be analyzed will support operations and maintenance tasks.

2. Obtain manpower data pertaining to "Baseline" or existing system/equipment in use and analyze the various skills, grades, TOE's, and maintenance tasks to determine the compatibility of its existing systems versus the new system/equipment.

3. Obtain the manpower requirements from LSAR Record D1. Use this data to determine the necessary manpower data to support existing resources as it relates to similar system/equipments.

4. Using the results of Processes 402.2.2.1A2 and 402.2.2.1A3, determine those MOS's/Skills that find a match between the "Baseline" and the new system/equipment that require additional training to operate, support and maintain the new system/equipment.

NOTE: MOS's/Skills should not appear on the results of Process 402.2.2.1A3.

5. In the field marked "MOS/Skill" on the worksheet "New Training/MOS Skills for Manpower and Personnel Resources", enter the MOS/Skill requiring additional training. In the "Number" field enter the total number of men that will require this additional training. (Obtain these numbers from the results of Process 402.2.1A2).

6. Under the subfield "Additional Training Required" enter in narrative form the additional training required, where it may be obtained i.e., DOD Training Facilities, manufactures plants or other sources. Include the cost of this training.

REFERENCES:

1. 303.2.5.4A3 - Manpower for System/Equipment Development.

2. 402.2.2.1A3 - Determine Impact on Existing Systems.

3. LSAR Records D1.

4. LSAR Record G.

PROCESS 402.2.2.2A2 - Analyze Impact Using Existing Personnel Resources

OBJECTIVE:

To analyze the alternatives that optimize the use of personnel that meets support and operational requirements.

PROCEDURE:

1. Identify and obtain personnel data pertaining to various maintenance tasks and then determine what necessary skills would be required to accomplish the tasks. If a match is not made, then determine if modifications to the available skills must be made or must a new skill be created to satisfy the maintenance task.

2. Obtain from LSA Record D1 the personnel data necessary to support the various operators tasks with justification.

3. Obtain personnel data pertaining to the requirements needed to accomplish the support tasks require from existing and compatible system/equipments. The results of this data may identify skill shortages which may have a direct impact on the design and operational requirements.

4. Identify any MOS/Skill that does not currently exist or is not currently being employed by an existing system as a new MOS/Skill. Compare results of Process 402.2.2.1A2 and 402.2.2.1A3 against 402.2.2.1A3 and 402.2.2A1. Enter these under the subfield MOS/Skills.

5. Under the field "Number" add the number Manpower for each new MOS/Job Skill that is required to operate and maintain the system/equipment.

6. Under the field "Additional Training Required" enter in narrative form the additional training that maybe required, where it maybe obtained i.e., DOD Training Facilities, manufacturer plants or other sources. Include the cost of this training. If no additional training is required enter NONE.

7. Document in a narrative format any Contractor Support required, where it maybe obtained, justification and associated cost data.

REFERENCES:

1. Sub-subtask 303.2.5.4A2 - Personnel Specialty Skills Development.

2. LSAR Record D1 - Personnel and Support Requirements

3. Sub-subtask 402.2.2.1A3 - Determine Impact on Existing Systems.

4. LSAR Record G - Skill Evaluation and Justification

PROCESS 402.2.2.2A3 - Consolidation of Manpower and Personnel Impacts

OBJECTIVE

To consolidate identified data to determine the surplus and shortfalls in the existing resources to support the new system/equipment.

PROCEDURES:

1. Data resulting from Processes 402.2.2.2A1 and 402.2.2.2A2 provides the quantitative manpower elements that are used by the existing system/equipment.

2. Incorporate in the report the results of optimum manpower and personnel requirements and characteristics of all system/equipments studied. This data is used to identify costs, staffing needs, special skills and the need of possible recruiting emphasis.

3. Obtain the manpower and personnel requirements and applicable data from LSAR Record D1. This data will identify the necessary training, personnel, support equipment and supply support required to accomplish each operation and maintenance task required to support existing and/or compatible system/equipment.

REFERENCES:

1. Sub-subtask 402.2.2.2A1 - Analyze Impact Using Existing Manpower Resources.

2. Sub-subtask 402.2.2.2A2 - Analyze Impact Using Existing Personnel Resources.

3. LSAR Record D1 - Personnel and Support Requirements.

PROCESS 402.2.2.3 - Develop Solutions for Resource Deficiencies

OBJECTIVE:

To provide to the Program Manager a listing of recommendations to solve any and all manpower and/or personnel deficiencies that may effect operational readiness, support and cost requirements.

PROCEDURE:

1. Consolidated and summarized the data, and identify the additional and available personnel and manpower that will be used when the system/equipment is fielded.

New Training/MOS Skills for
Manpower and Personnel Resources
(402.2.2.2A3)

End Item Name:

Nomenclature:

Part Number:

1. Identify new system/equipment:

2. Identify MOS's/Skills that require additional training:

MOS/Skills	Number	Additional Training Required

3. Identify new MOS's/Skills required:

MOS/Skills	Number	Additional Training Required

4. Contract Support:

2. Provide the Program Manager with solutions to manpower and personnel deficiencies. Considerations should include, but are not limited to:

a. Shortage of certain skills

b. Requirements to increase recruiting

c. Conduct additional training

d. Contract Support

e. Cost

f. Design changes

g. Support concept changes

REFERENCES:

Processes 402.2.2.1A2, 402.2.2.1A3, and 402.2.2.2A3

Develop Solutions for Resources and Deficiencies

(402.2.2.3)

End Item Name:

Nomenclature:

Part Number:

1. Identify new system/equipment:

2. Recommendations:

ANNEX D

LSA SUBTASK 402.2.2
VERT APPLICATION METHODOLOGY

VERT APPLICATION METHODOLOGY

BACKGROUND:

Venture Evaluation and Review Technique (VERT) was developed as a network analysis technique to facilitate management decision making. It allows a systematic planning and control of programs and enables managers to find solutions to real life managerial problems.

The terms of the APJ contract require the provision of batch files for each of the VERT networks associated with the various Data Flow Diagrams in the APJ 966 projects.

APJ has been successful in adopting a method for the creation of these networks using the existing EXCELERATOR software package and establishing a naming convention compatible with that used in the Data Flow Diagrams. To do this APJ has made use of the PC model of VERT. A Structured Analysis project was used for this purpose. The prototype VERT network structure was made for one top level and one lower level data flow diagram.

The PC model of VERT has certain limitations built into it. To overcome some of these limitations, certain conventions were used to create the input files. To maintain full generality a set of "dummy" default values were established. The model allows the user to alter the default values of time, cost, and performance to satisfy their specific requirements.

METHODOLOGY:

The basic symbols used to structure the network are:

(i) **SQUARES** - to indicate NODES. These are decision points in the project, or points beyond which the project cannot proceed unless certain criteria are met. There are two type of nodes, one which supports input operations and, the second type which supports output operations.

(ii) **LINES** - to indicate ARCS which are activities that have time, cost, and performance criteria associated with them.

In practice, however, both the arcs and nodes are similar, in that both have time, cost, and performance criteria associated with them. The arcs have a primary and a cumulative set of time, cost, and performance criteria whereas the nodes have only a single cumulative set.

(iii) **NAMING CONVENTIONS** - Efforts have been made to keep the naming convention as compatible as possible to the Data Flow Diagrams. The naming convention used is displayed below.

NODES - All nodes are prefixed with the letter **N**. The individual Nodes are identified by a number and a letter. The number refers to the number of the node within the diagram and the letter refers to the diagram number in the project. In the event that a node has been referenced in an earlier diagram they also carry the number of the node in the earlier diagram as a prefix to the individual node number.

N2.4A

- **N** - All nodes are prefixed with the letter **N**
- **2** - Gives the number of the node it relates to in a higher level diagram or an earlier data flow diagram within the project. In this case it refers to node **N2** of the top level diagram.
- **4** - Gives the number of the node it relates to in a higher level diagram or an earlier data flow diagram within the project. In this case it refers to node **N2** of the top level diagram.
- **A** - The nodes in each subsequent explosion are allotted an alphabetical suffix indication the number of the explosion diagram in the particular project. In this case it is the first lower level diagram within the project.

ARCS - All arcs are prefixed with either the letter **C** or **E**. The individual Arcs are identified by two numbers. The first number refers to the number of the arc within the diagram and the second number refers to the number of the diagram within the project. In the event that an arc has been referenced in an earlier diagram they also carry the number of the arc in the earlier diagram as a prefix to the individual arc number. The arcs which are identified by the letter **E** have direct reference to a process in the corresponding data flow diagram and as such are named the same as the process itself.

C - All arcs are prefixed with the letter C. In some cases, however, arcs carry a prefix of E. These particular arcs correspond to a process within the data flow diagram and are thus named the same as the process itself.

3.3- Gives the number of the arc it relates to in a higher level diagram or an earlier data flow diagram within the project. In this case it refers to arc number 3 in lower level diagram #3 within the project.

8.4- Indicates that this particular arc is the #8 arc in the #4 lower level diagram of the project.

BATCH FILES

INPUT FILES - The input file names are given the extension *.IN.

OUTPUT FILES - The simulation output files are given the extension *OU.

PRINT FILES - The print files have been given the extension *.PR.

(This would allow subsequent updates of the input files to be numbered as IN1..., OU1..., PR1... etc.)

DEFAULT SETTINGS:

Control Record:

(i) The output option selected is "0" which provides a detailed listing, and high level of summary information.

(ii) The input record listing option selected is "0" which prints all input records.

(iii) The composite terminal node output option selected is "16" which assumes family mode and intrafamily transfer of histogram data.

(iv) The number of interactions used are "10" in the demonstration model to facilitate operation in the debug mode if required.

(v) The composite node name and the network name are left as blanks.

(vi) In the run identification the name of the corresponding Data Flow Diagram is used as identification for the network description.

Arc Records:

(i) For each of the arcs the following records are provided:
(a) Master Arc Record
(b) Time Distribution Satellite
(c) Cost Distribution Satellite
(d) Performance Distribution Satellite

(ii) The Distribution Satellite Records are created to provide a uniform statistical distribution.

(iii) The default values used for the minimum and maximum in each criteria are:

TIME	10.0	10.0
COST	10.0	100.0
PERFORMANCE	10.0	50.0

Node Records:

(i) Input Logic - The input logic for the nodes are either "**INITIAL**" or "**AND**".

(ii) Output Logic - The output logic has been defaulted to "**AND**" or "**TERMINAL**".

(iii) The output option indicator and the storage option indicator are defaulted to read "**O**".

(iv) The node description has also been left blank.

(It is again noted that the user can change the default values to desired values as identified by the particular requirement and applications.)

DOCUMENTATION:

With every project report APJ will be providing the following documents relating to the VERT:

(i) A VERT network diagram corresponding to a particular data flow diagram.

(ii) A print out of the VERT network inputs for the particular data flow diagrams.

(iii) A floppy disc containing the sample input, print and the simulation output files for the default VERT network.

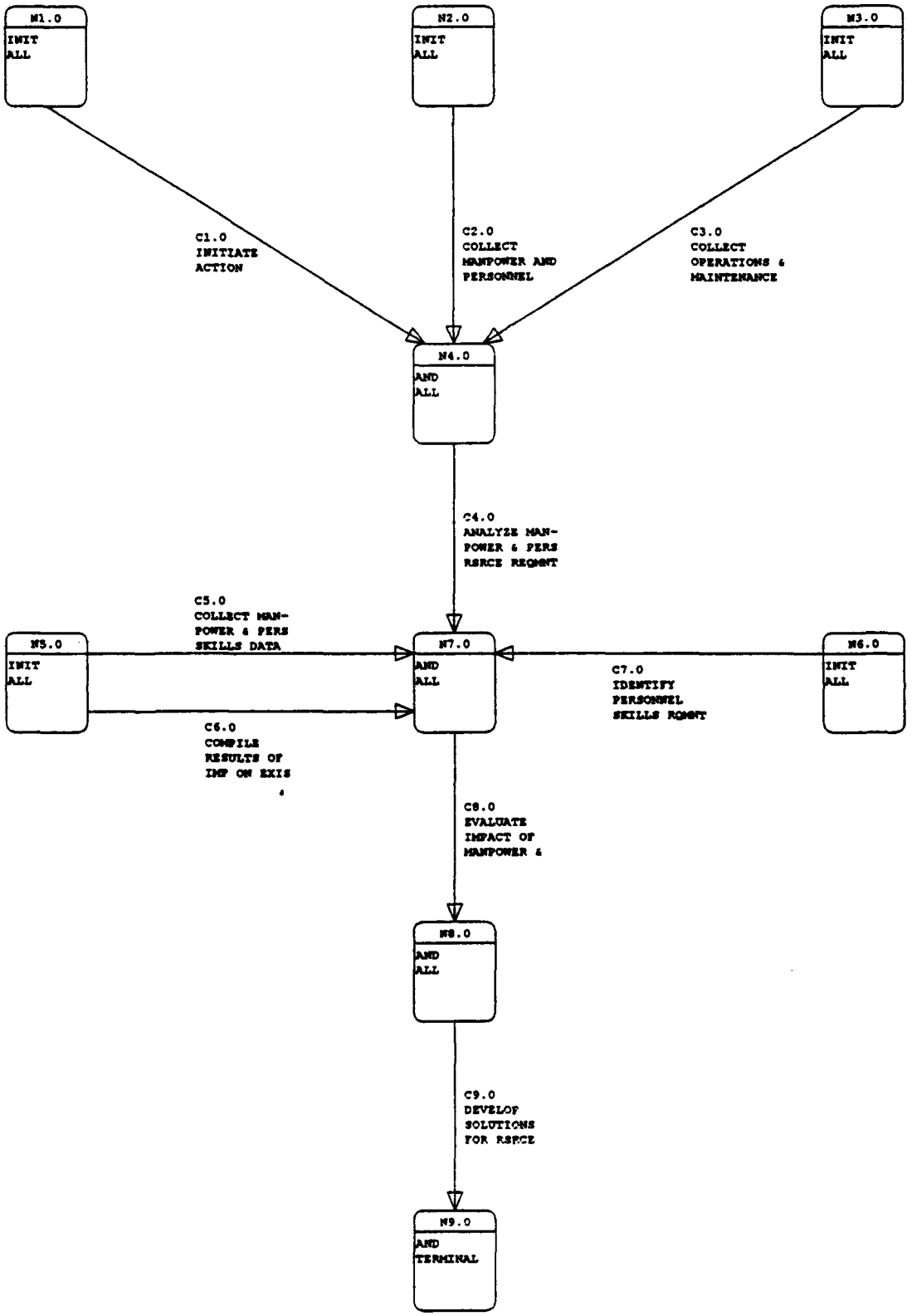

402.2.2 VERT ANAL OF M&P RES REQ
Created by: CHAU
Revised by: JACK
Date changed: 25-JAN-90

```
      N E W    N E T W O R K                    PAGE   1
            1         2         3         4         5         6         7
   12345678901234567890123456789012345678901234567890123456789012345678901234567890123456789012
 1. 0016  10                    ANALYSIS OF MANPOWER & PERSONNEL RESOURCE REQUIR
              +         +         +         +         +         +         +
 2. C1.0     N1.0     N4.0      1.0 INITIATE ACTION
 3. C1.0     DTIME 1          2       10.0      20.0
 4. C1.0     DCOST 1          2       10.0     100.0
 5. C1.0     DPERF 1          2       10.0      50.0
              +         +         +         +         +         +         +
 6. C2.0     N2.0     N4.0      1.0 COLLECT MANPOWER & PERSONNEL DATA
 7. C2.0     DTIME 1          2       10.0      20.0
 8. C2.0     DCOST 1          2       10.0     100.0
 9. C2.0     DPERF 1          2       10.0      50.0
              +         +         +         +         +         +         +
10. C3.0     N3.0     N4.0      1.0 COLLECT OPERATIONS & MAINTENANCE DATA
11. C3.0     DTIME 1          2       10.0      20.0
12. C3.0     DCOST 1          2       10.0     100.0
13. C3.0     DPERF 1          2       10.0      50.0
              +         +         +         +         +         +         +
14. C4.0     N4.0     N7.0      1.0 ANALYZE MANPOWER & PERSONNEL RESOURCE REQUI
15. C4.0     DTIME 1          2       10.0      20.0
16. C4.0     DCOST 1          2       10.0     100.0
17. C4.0     DPERF 1          2       10.0      50.0
              +         +         +         +         +         +         +
18. C5.0     N5.0     N7.0      1.0 COLLECT MANPOWER & PERSONNEL SKILLS DATA
19. C5.0     DTIME 1          2       10.0      20.0
20. C5.0     DCOST 1          2       10.0     100.0
21. C5.0     DPERF 1          2       10.0      50.0
              +         +         +         +         +         +         +
22. C6.0     N5.0     N7.0      1.0 COMPILE RESULTS OF IMPACT ON EXISTING SYSTE
23. C6.0     DTIME 1          2       10.0      20.0
24. C6.0     DCOST 1          2       10.0     100.0
25. C6.0     DPERF 1          2       10.0      50.0
              +         +         +         +         +         +         +
26. C7.0     N6.0     N7.0      1.0 IDENTIFY PERSONNEL SKILLS REQUIREMENT
27. C7.0     DTIME 1          2       10.0      20.0
28. C7.0     DCOST 1          2       10.0     100.0
29. C7.0     DPERF 1          2       10.0      50.0
              +         +         +         +         +         +         +
30. C8.0     N7.0     N8.0      1.0 EVALUATE IMPACT OF MANPOWER & PERSONNEL REQ
31. C8.0     DTIME 1          2       10.0      20.0
32. C8.0     DCOST 1          2       10.0     100.0
33. C8.0     DPERF 1          2       10.0      50.0
              +         +         +         +         +         +         +
34. C9.0     N8.0     N9.0      1.0 DEVELOP SOLUTIONS FOR RESOURCE DEFICIENCIES
35. C9.0     DTIME 1          2       10.0      20.0
36. C9.0     DCOST 1          2       10.0     100.0
37. C9.0     DPERF 1          2       10.0      50.0
              +         +         +         +         +         +         +
38. ENDARC
              +         +         +         +         +         +         +
39. N1.0     1  2 0 0
              +         +         +         +         +         +         +
40. N4.0     2  2 0 0
              +         +         +         +         +         +         +
41. N2.0     1  2 0 0
              +         +         +         +         +         +         +
42. N3.0     1  2 0 0
              +         +         +         +         +         +         +
```

```
          1         2         3         4         5         6         7
12345678901234567890123456789012345678901234567890123456789012345678901234567890123456789012
   N E W    N E T W O R K                    PAGE   2
          1         2         3         4         5         6         7
12345678901234567890123456789012345678901234567890123456789012345678901234567890123456789012
43. N7.0    2  2 0 0
           +         +         +         +         +         +         +
44. N5.0    1  2 0 0
           +         +         +         +         +         +         +
45. N6.0    1  2 0 0
           +         +         +         +         +         +         +
46. N8.0    2  2 0 0
           +         +         +         +         +         +         +
47. N9.0    2  1 0 0
           +         +         +         +         +         +         +
48. ENDNODE
          1         2         3         4         5         6         7
12345678901234567890123456789012345678901234567890123456789012345678901234567890123456789012
```

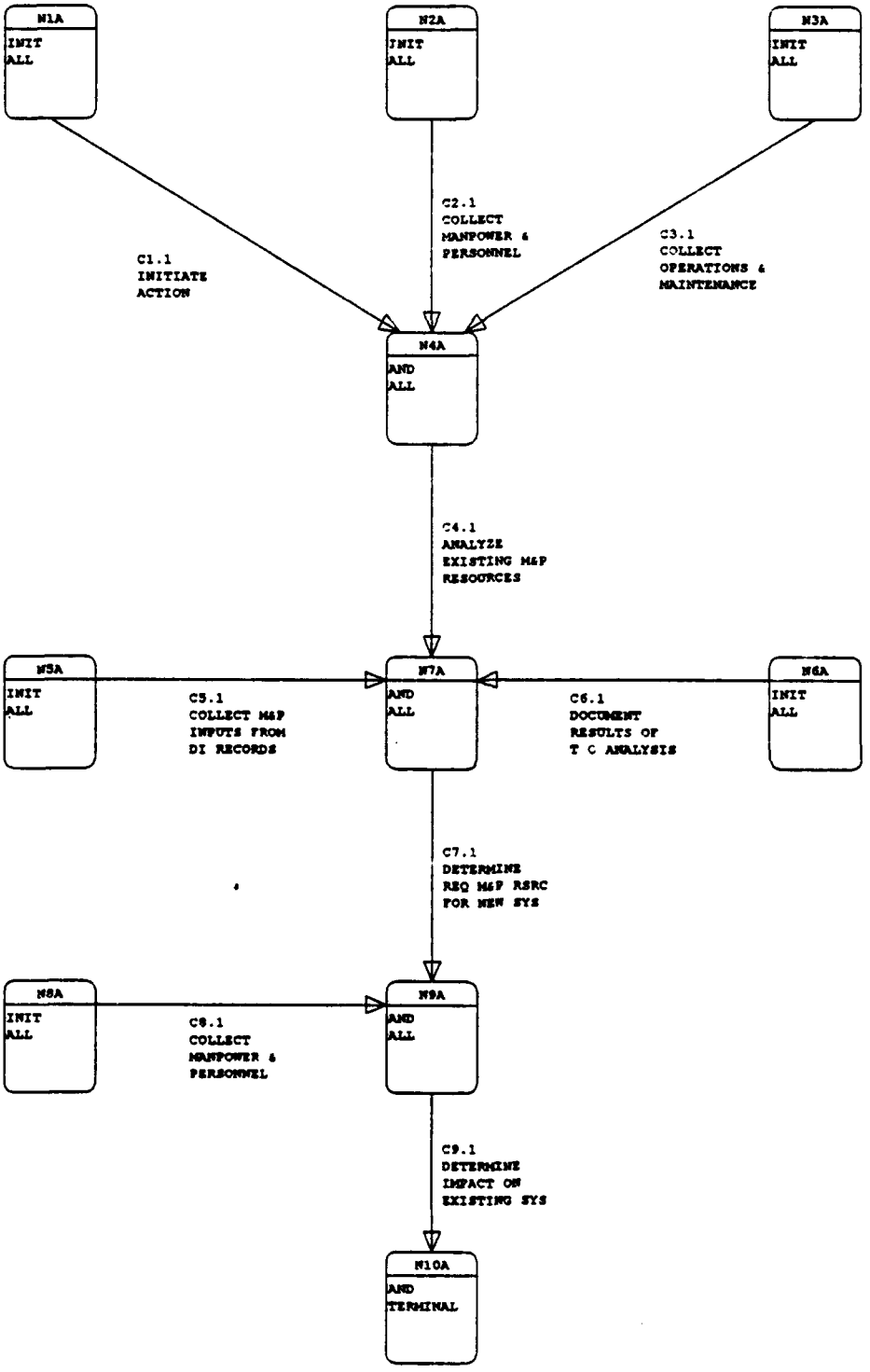

402.2.2.1A VEPT ANAL EXIS M&P P.S
Created by: CHAU
Revised by: CHAU
Date changed: 07-DEC-99

```
      N E W    N E T W O R K                          PAGE   1
               1         2         3         4         5         6         7
     12345678901234567890123456789012345678901234567890123456789012345678901234567890123456789012
 1. 0016  10                    ANALYSIS OF EXISTING MANPOWER & PERSONNEL RESOUR
                +         +         +         +         +         +         +
 2. C1.1     N1A      N4A       1.0 INITIATE ACTION
 3. C1.1     DTIME 1           2       10.0      20.0
 4. C1.1     DCOST 1           2       10.0     100.0
 5. C1.1     DPERF 1           2       10.0      50.0
                +         +         +         +         +         +         +
 6. C2.1     N2A      N4A       1.0 COLLECT MANPOWER & PERSONNEL DATA
 7. C2.1     DTIME 1           2       10.0      20.0
 8. C2.1     DCOST 1           2       10.0     100.0
 9. C2.1     DPERF 1           2       10.0      50.0
                +         +         +         +         +         +         +
10. C3.1     N3A      N4A       1.0 COLLECT OPERATIONS & MAINTENANCE DATA
11. C3.1     DTIME 1           2       10.0      20.0
12. C3.1     DCOST 1           2       10.0     100.0
13. C3.1     DPERF 1           2       10.0      50.0
                +         +         +         +         +         +         +
14. C4.1     N4A      N7A       1.0 ANALYZE EXISTING MANPOWER & PERSONNEL RESOU
15. C4.1     DTIME 1           2       10.0      20.0
16. C4.1     DCOST 1           2       10.0     100.0
17. C4.1     DPERF 1           2       10.0      50.0
                +         +         +         +         +         +         +
18. C5.1     N5A      N7A       1.0 COLLECT MANPOWER & PERSONNEL INPUTS FROM DI
19. C5.1     DTIME 1           2       10.0      20.0
20. C5.1     DCOST 1           2       10.0     100.0
21. C5.1     DPERF 1           2       10.0      50.0
                +         +         +         +         +         +         +
22. C6.1     N6A      N7A       1.0 DOCUMENT RESULTS OF TRADE-OFF ANALYSIS
23. C6.1     DTIME 1           2       10.0      20.0
24. C6.1     DCOST 1           2       10.0     100.0
25. C6.1     DPERF 1           2       10.0      50.0
                +         +         +         +         +         +         +
26. C7.1     N7A      N9A       1.0 DETERMINE REQUIRED M & P RESOURCES FOR NEW
27. C7.1     DTIME 1           2       10.0      20.0
28. C7.1     DCOST 1           2       10.0     100.0
29. C7.1     DPERF 1           2       10.0      50.0
                +         +         +         +         +         +         +
30. C8.1     N8A      N9A       1.0 COLLECT MANPOWER & PERSONNEL DATA
31. C8.1     DTIME 1           2       10.0      20.0
32. C8.1     DCOST 1           2       10.0     100.0
33. C8.1     DPERF 1           2       10.0      50.0
                +         +         +         +         +         +         +
34. C9.1     N9A      N10A      1.0 DETERMINE IMPACT ON EXISTING SYSTEMS
35. C9.1     DTIME 1           2       10.0      20.0
36. C9.1     DCOST 1           2       10.0     100.0
37. C9.1     DPERF 1           2       10.0      50.0
                +         +         +         +         +         +         +
38. ENDARC
                +         +         +         +         +         +         +
39. N1A      1  2 0 0
                +         +         +         +         +         +         +
40. N4A      2  2 0 0
                +         +         +         +         +         +         +
41. N2A      1  2 0 0
                +         +         +         +         +         +         +
42. N3A      1  2 0 0
                +         +         +         +         +         +         +
```

```
                1         2         3         4         5         6         7
        12345678901234567890123456789012345678901234567890123456789012345678901 2
1          N E W    N E T W O R K                PAGE   2
                1         2         3         4         5         6         7
        12345678901234567890123456789012345678901234567890123456789012345678901 2
   43. N7A     2  2 0 0
                +         +         +         +         +         +         +
   44. N5A     1  2 0 0
                +         +         +         +         +         +         +
   45. N6A     1  2 0 0
                +         +         +         +         +         +         +
   46. N9A     2  2 0 0
                +         +         +         +         +         +         +
   47. N8A     1  2 0 0
                +         +         +         +         +         +         +
   48. N10A    2  1 0 0
                +         +         +         +         +         +         +
   49. ENDNODE
                1         2         3         4         5         6         7
        12345678901234567890123456789012345678901234567890123456789012345678901 2
```

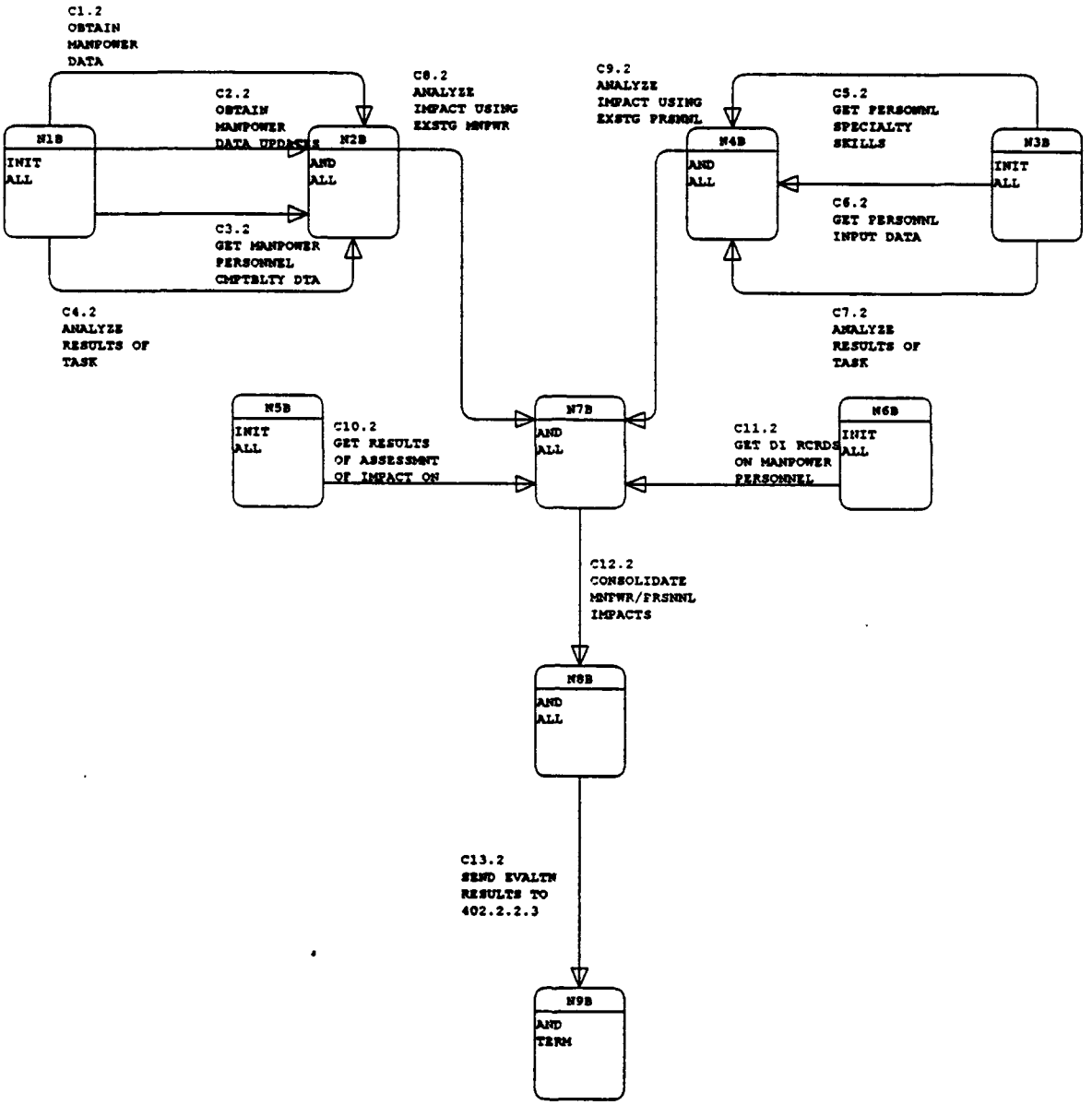

402.2.2.2A VERT ANAL IMP EXIS RS
Created by: CRAU
Revised by: JACK
Date changed: 25-JAN-90

```
      N E W    N E T W O R K                    PAGE   1
            1         2         3         4         5         6         7
   12345678901234567890123456789012345678901234567890123456789012345678901234567890123456789012
 1. 0016  10                    IMPACT ANALYSIS OF MANPOWER AND PERSONNEL REQUIR
              +         +         +         +         +         +         +
 2. C1.2     N1B       N2B        1.0 OBTAIN MANPOWER DATA
 3. C1.2     DTIME 1           2       10.0       20.0
 4. C1.2     DCOST 1           2       10.0      100.0
 5. C1.2     DPERF 1           2       10.0       50.0
              +         +         +         +         +         +         +
 6. C2.2     N1B       N2B        1.0 OBTAIN MANPOWER DATA UPDATES
 7. C2.2     DTIME 1           2       10.0       20.0
 8. C2.2     DCOST 1           2       10.0      100.0
 9. C2.2     DPERF 1           2       10.0       50.0
              +         +         +         +         +         +         +
10. C3.2     N1B       N2B        1.0 GET MANPOWER/PERSONNEL COMPATIBILITY DATA
11. C3.2     DTIME 1           2       10.0       20.0
12. C3.2     DCOST 1           2       10.0      100.0
13. C3.2     DPERF 1           2       10.0       50.0
              +         +         +         +         +         +         +
14. C4.2     N1B       N2B        1.0 ANALYZE RESULTS OF TASK 402.2.2.1A3
15. C4.2     DTIME 1           2       10.0       20.0
16. C4.2     DCOST 1           2       10.0      100.0
17. C4.2     DPERF 1           2       10.0       50.0
              +         +         +         +         +         +         +
18. C5.2     N3B       N4B        1.0 GET PERSONNEL SPECIALTY SKILLS
19. C5.2     DTIME 1           2       10.0       20.0
20. C5.2     DCOST 1           2       10.0      100.0
21. C5.2     DPERF 1           2       10.0       50.0
              +         +         +         +         +         +         +
22. C6.2     N3B       N4B        1.0 GET PERSONNEL INPUT DATA
23. C6.2     DTIME 1           2       10.0       20.0
24. C6.2     DCOST 1           2       10.0      100.0
25. C6.2     DPERF 1           2       10.0       50.0
              +         +         +         +         +         +         +
26. C7.2     N3B       N4B        1.0 ANALYZE RESULTS OF TASK 402.2.2.1A3
27. C7.2     DTIME 1           2       10.0       20.0
28. C7.2     DCOST 1           2       10.0      100.0
29. C7.2     DPERF 1           2       10.0       50.0
              +         +         +         +         +         +         +
30. C8.2     N2B       N7B        1.0 ANALYZE IMPACT OF USING EXISTING MANPOWER
31. C8.2     DTIME 1           2       10.0       20.0
32. C8.2     DCOST 1           2       10.0      100.0
33. C8.2     DPERF 1           2       10.0       50.0
              +         +         +         +         +         +         +
34. C9.2     N4B       N7B        1.0 ANALYZE IMPACT OF USING EXISTING PERSONNEL
35. C9.2     DTIME 1           2       10.0       20.0
36. C9.2     DCOST 1           2       10.0      100.0
37. C9.2     DPERF 1           2       10.0       50.0
              +         +         +         +         +         +         +
38. C10.2    N5B       N7B        1.0 GET RESULTS OF ASSESMENT OPF IMPACT ON EXST
39. C10.2    DTIME 1           2       10.0       20.0
40. C10.2    DCOST 1           2       10.0      100.0
41. C10.2    DPERF 1           2       10.0       50.0
              +         +         +         +         +         +         +
42. C11.2    N6B       N7B        1.0 GET DATA INPUT RECORDS ON MANPOWER/PERSONNE
43. C11.2    DTIME 1           2       10.0       20.0
44. C11.2    DCOST 1           2       10.0      100.0
45. C11.2    DPERF 1           2       10.0       50.0
              +         +         +         +         +         +         +
```

```
          1         2         3         4         5         6         7
12345678901234567890123456789012345678901234567890123456789012345678901234567890123456789012
   N E W    N E T W O R K                          PAGE   2
          1         2         3         4         5         6         7
12345678901234567890123456789012345678901234567890123456789012345678901234567890123456789012
46. C12.2   N7B      N8B       1.0 CONSOLIDATE THE MANPOWER & PERSONNEL IMPACT
47. C12.2   DTIME 1           2       10.0       20.0
48. C12.2   DCOST 1           2       10.0      100.0
49. C12.2   DPERF 1           2       10.0       50.0
            +         +         +         +         +         +         +
50. C13.2   N8B      N9B       1.0 SEND EVALUATION RESULTS TO TASK 402.2.2.3
51. C13.2   DTIME 1           2       10.0       20.0
52. C13.2   DCOST 1           2       10.0      100.0
53. C13.2   DPERF 1           2       10.0       50.0
            +         +         +         +         +         +         +
54. ENDARC
            +         +         +         +         +         +         +
55. N1B     1  2 0 0
            +         +         +         +         +         +         +
56. N2B     2  2 0 0
            +         +         +         +         +         +         +
57. N3B     1  2 0 0
            +         +         +         +         +         +         +
58. N4B     2  2 0 0
            +         +         +         +         +         +         +
59. N7B     2  2 0 0
            +         +         +         +         +         +         +
60. N5B     1  2 0 0
            +         +         +         +         +         +         +
61. N6B     1  2 0 0
            +         +         +         +         +         +         +
62. N8B     2  2 0 0
            +         +         +         +         +         +         +
63. N9B     2  1 0 0
            +         +         +         +         +         +         +
64. ENDNODE
          1         2         3         4         5         6         7
12345678901234567890123456789012345678901234567890123456789012345678901234567890123456789012
```

ANNEX E

STRUCTURED SYSTEMS ANALYSIS
Fundamentals

NOTE: **Our presentation of Structured Analysis Fundamented with the associated figure is reproduced verbatim in each report**

ANNEX E
STRUCTURED SYSTEMS ANALYSIS

Fundamentals

Structured Systems Analysis (SSA) has recently become an industry standard for generating Data Flow Diagrams (replacing "logic diagrams" or "flow charts") to aid in coordinating the functions to be performed by a computer program and its associated Inputs/Outputs (I/O). During the SSA, each set of "flow charts" can be checked by the potential user to assure that there is complete agreement on what is to be done by the program, and how it is to be accomplished. It also provides considerable flexibility for updating or changing the program.

Six basic elements (see figure 1) are used in SSA:

1. Process (PRC)
2. Data Flow (DAF)
3. Data Store (DAS)
4. External Entity (EXT)
5. Data Flow Diagram (DFD)
6. Data Dictionary (DCT)

PROCESS (Represented by a Circle):

A function or operation to be performed which can be explained by a set of instructions representing a single task, e.g., "calculate interest on a loan", "prepare a draft report". If the Process description is too complex to describe in a few steps, it may be necessary to develop a lower level description (see below).

DATA FLOW (Lines interconnecting Processes or I/Os):

Each function or Process cannot be a stand-alone in a complex network. To have any meaning in a program, each process must be initiated by a previous action and/or provided information on which to act. Furthermore, a Process must result in an output which is the input to the next logical Process. These inputs, outputs, or initiating actions are identified as Data Flows, and are represented by the Data Flow lines indicating its point of origin and the process to which it provides data.

DATA STORE (Represented by two parallel lines):

Although some Processes generate data used as input to a succeeding Process, there is often a need to "gather or collect" information from files in which it is stored. This information may come from an external source (such as a MIL-STD, Army regulation, historical experience files, etc.), or an internal source or file in which data is temporarily stored for use by succeeding processes. These Data Stores can be visualized as a "file cabinet", in which the data are stored for later retrieval).

EXTERNAL ENTITY (Represented by a Rectangle):

Each program or logical process must have an initiating action, a "point" of disposition of the results, and possible input guidance or instructions. Each of these have authorities, functions, or applications which are independent of the program Process (although required by the program Process). Thus, these activities, agencies, or facilities are considered "External Entities" to the program.

DATA FLOW DIAGRAM:

The general arrangement of the above can be readily seen. First, the circle or Process describes what has to be done; the interconnecting lines represent the Data Flows, together with the specific description of all I/Os. The Data Stores identify the source and/or, file designation of a data base, and the External Entities represent those activities remote from the Process, which are the source of guidance or the recipients of the program. This combination of Processes, Data Flows, Data Stores, and External Entities constitutes a "Data Flow Diagram". The unique feature of the Data Flow Diagram (DFD) is that each process can be considered independently, permitting a change to be made in one Process without a major change in the overall program.

DATA DICTIONARY:

The Data Dictionary consists of a complete description of each of the basic elements. For the Process, it contains a step-by-step description of what has to be performed. The description of the Data Flow identifies the nomenclature of the data, a detailed description of its content, and its source. The Data Stores and External Entities are described, including possible location.

The Data Dictionary (a living document) begins with a description of the first Process and is continually built-up as the Data Flow Diagrams are expanded, detailed, and eventually completed.

APPROACH TO PERFORMING STRUCTURED SYSTEM ANALYSIS:

The best approach to Structured Systems Analysis is to assume that the program consists of a series of processes, each of which are to be assigned to an inexperienced analyst. Each analyst is to be walked through the assigned process of the Program, explaining step-by-stepwhat functions have to be performed or what actions have to be taken to accomplish the process. The analyst is also informed where the information is coming from (input Data Flow), what is to be generated by each process (output Data Flow), where the data base may to be found (Data Stores), and who to contact for guidance (External Entities).

The best way to initiate a SSA is to set down the point of origin of a program, its final goal(s), and the intermediate functions or actions needed to get from beginning to goal. Each step should be considered as a Process - some may be sequential and others parallel. Then, the steps needed to accomplish the Process should be described. If the description is complex and needs intermediate steps, the Process is then a candidate for an "explosion". That is, the top (or upper) level Process is considered as a "project" and its own Data Flow Diagram is prepared.

When writing the step-by-step procedures in the Process, certain elements of data (or information) must be made available for the procedure. Each element of data is considered as an input Data Flow, which is identified and described. The product (or result) of a Process is an output Data Flow element.

Each Data Flow to the Process must originate from:

1. an earlier Process
2. a Data Store (or file)
3. an External Entity.

These sources are also identified, described and put into the Data Dictionary. As soon as the last portion of the Data Flow Diagram has been described, the SSA is complete.

The structured Analysis phase is followed by Structured Design, then by programming and finally software test and validation. The organization of Structured Analysis and its relationship to Structured System Design is shown on Figure 2.

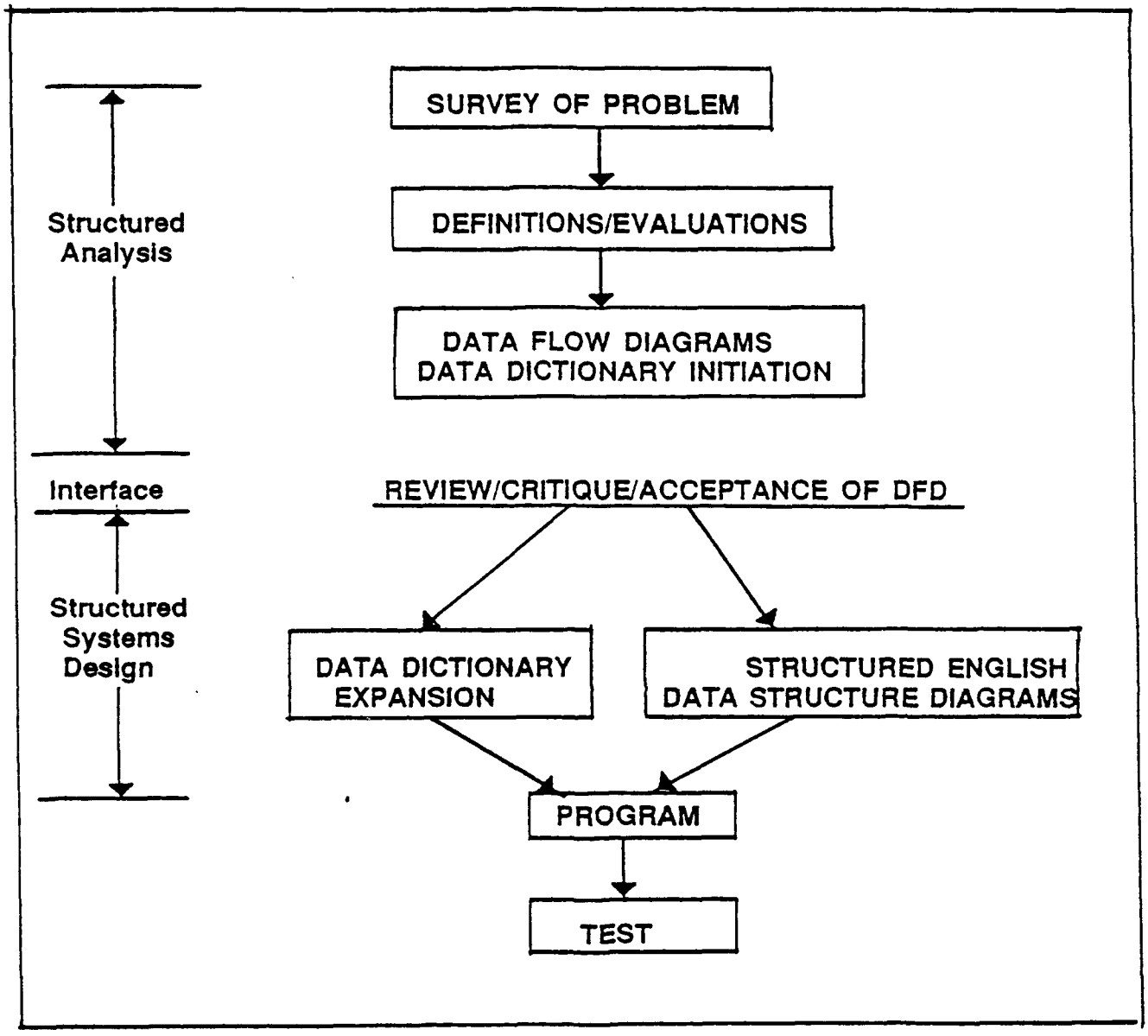

Figure 1. Structured Analysis & Structured Systems Design Organization

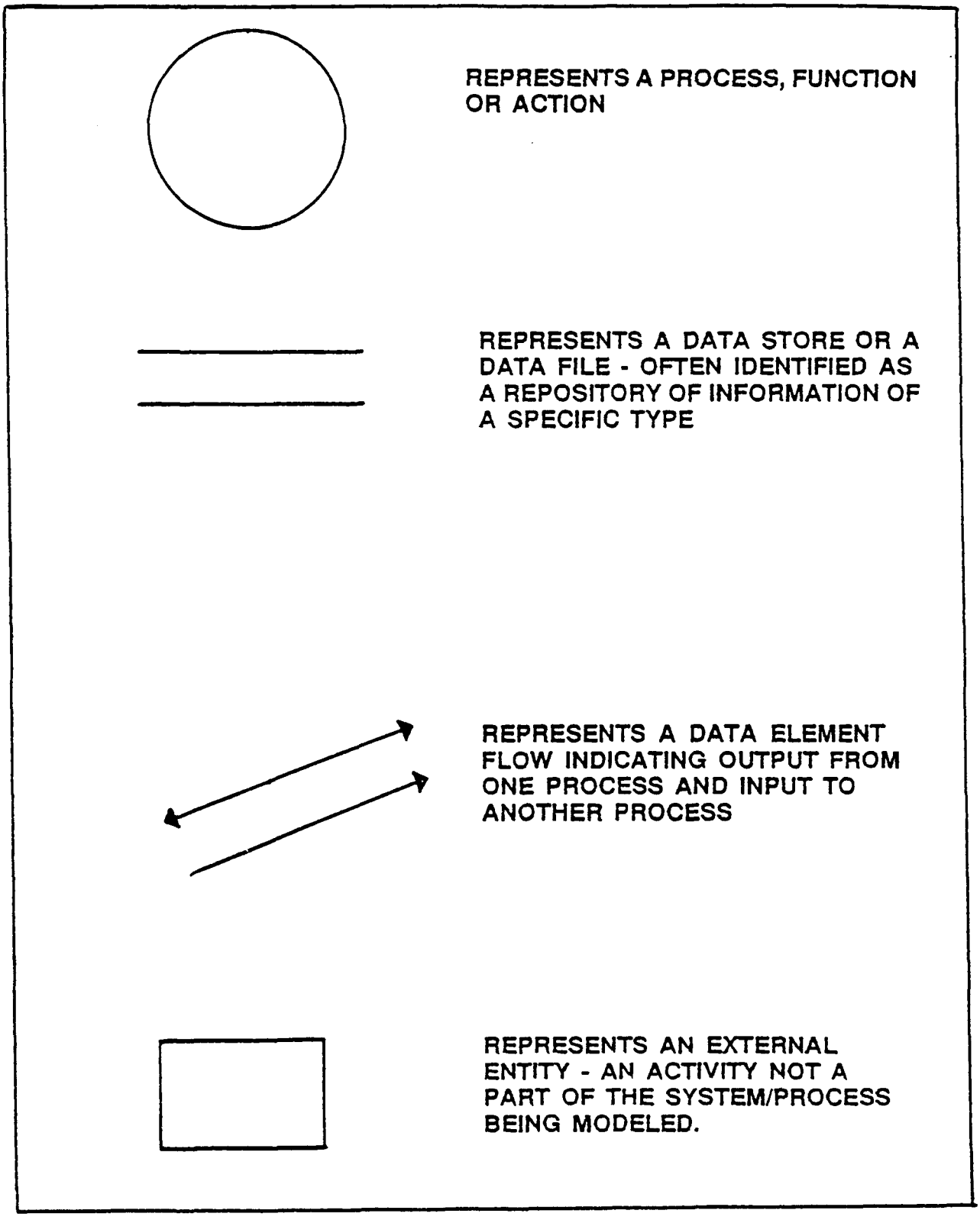

Figure 2. Standard DFD Symbol Definitions