Report No. CG-D-05-92

WORLDWIDE BUOY TECHNOLOGY SURVEY

AD-A248 407

John C. Daidola
Nedret S. Basar
Christopher J. Reyling
Fontain M. Johnson
M. ROSENBLATT & SON, INC.
and
Richard T. Walker

U.S. COAST GUARD RESEARCH AND DEVELOPMENT CENTER
AVERY POINT, GROTON, CONNECTICUT 06340-6096

FINAL REPORT
VOLUME III: APPENDIX C
BUOY ILLUSTRATIONS

FEBRUARY 1991

This document is available to the U.S. public through the
National Technical Information Service, Springfield, Virginia 22161

Prepared for:

U.S. Department Of Transportation
United States Coast Guard
Office of Engineering, Logistics and Development
Washington, DC 20593-0001

92-08977

database files and program routines as well as the Users Manual, the Computer Operations Manual, and the Program Maintenance Manual.

In the subsequent sections of this report, the findings and analysis results from all Task B efforts are presented as follows:

- In Section 2.0, the results of worldwide surveys are presented in separate subsections:
  - for the major countries' national navigation authorities;
  - for commercial institutions in the major navigation countries;
  - for the International Association of Lighthouse Authorities; and
  - for the national authorities and manufacturers of other countries.
- Section 2.0 also includes, in subsection 2.5, a review of the findings and trends from all surveys.
- Section 3.0 describes the BTIS efforts and presents the results obtained.
- Detailed information to support the results cited in Sections 2.0 and 3.0 are presented in the five Appendices as follows:
  - Appendix A contains the summaries of all interviews held during the worldwide surveys as recorded.
  - Hard copies of all 381 U.S. and foreign buoy records included in the BTIS Database are contained in Appendix B along with curves of cumulative cross-sectional areas following the records of all buoys for which such curves could be developed.
  - In Appendix C, illustrations of all 381 buoys are presented.
  - Appendix D contains the methods used in computing cumulative ares, nominal visual ranges, and radar ranges for individual buoys.
  - The contacts made and additional data obtained during the 1990 IALA Conference in Veldhoven, the Netherlands, are described in Appendix E.

Due to the voluminous nature of Appendices B and C, they are presented in separately bound volumes. Appendices A, D and E are found at the end of this report.

NOTICE

This document is disseminated under the sponsorship of the Department of Transportation in the interest of information exchange. The United States Government assumes no liability for its contents or use thereof.

The United States Government does not endorse products or manufacturers. Trade or manufacturers' names appear herein solely because they are considered essential to the object of this report.

This report was directed and sponsored by the Coast Guard Research and Development Center. This report does not constitute a standard, specification or regulation.

SAMUEL F. POWEL, III
Technical Director
United States Coast Guard
Research & Development Center
1082 Shennecossett Road
Groton, CT 06340-6096

Technical Report Documentation Page

1. Report No.	2. Government Accession No.	3. Recipient's Catalog No.
CG-D-05-92		

4. Title and Subtitle	5. Report Date
BUOY TECHNOLOGY SURVEY WORLDWIDE BUOY TECHNOLOGY SURVEY	February 1991
	6. Performing Organization Code 15221-2
7. Author(s) J. C. DAIDOLA, N. S. BASAR, C. J. REYLING, F. M. JOHNSON & R. T. WALKER	8. Performing Organization Report No. R & DC 11/90
9. Performing Organization Name and Address M. ROSENBLATT & SON, INC. 350 BROADWAY NEW YORK, NY 10013 USCG R & D CENTER AVERY POINT GROTON, CT 06340-6096	10. Work Unit No. (TRAIS)
	11. Contract or Grant No. DTCG39-89-C-E27E04
12. Sponsoring Agency Name and Address DEPARTMENT OF TRANSPORTATION U. S. COAST GUARD OFFICE OF ENGINEERING, LOGISTICS AND DEVELOPMENT WASHINGTON, DC 20593-0001	13. Type of Report and Period Covered FINAL
	14. Sponsoring Agency Code G-NSR

15. Supplementary Notes

REPORT CONSISTS OF THREE VOLUMES: VOLUME I CONTAINS MAIN TEXT OF REPORT PLUS APPENDICES A, D AND E: VOLUME II CONTAINS BUOY RECORDS IN TWO BOOKS: VOLUME III CONTAINS BUOY ILLUSTRATIONS.

16. Abstract

THIS REPORT PRESENTS THE RESULTS OF THE SECOND PART (TASK B) OF THE U.S.C.G. project "BUOY TECHNOLOGY SURVEY". PERSONAL INTERVIEWS WERE CONDUCTED WITH THE NAVIGATION AUTHORITIES AND BUOY MANUFACTURERS AND DESIGNERS IN CANADA, DENMARK, ENGLAND, FINLAND, FRANCE, GERMANY, JAPAN, THE NETHERLANDS AND NORWAY. NAVIGATION AUTHORITIES AND MANUFACTURERS FROM TWELVE ADDITIONAL COUNTRIES WERE ALSO CONTACTED DURING THE 12TH CONFERENCE OF THE INTERNATIONAL ASSOCIATION OF LIGHTHOUSE AUTHORITIES IN JUNE 1990. RELEVANT DATA WERE OBTAINED FROM THESE SOURCES ON THE PHYSICAL, OPERATIONAL AND PERFORMANCE CHARACTERISTICS OF THEIR FLOATING AIDS TO NAVIGATION. A COMPUTER DATABASE WAS DEVELOPED FOR STORING THE DATA FROM ALL SOURCES CITED AS WELL AS THE DATA RECEIVED DURING TASK A OF THIS PROJECT FROM THE U.S. COAST GUARD AND U.S. MANUFACTURERS. THE DATABASE (BUOY TECHNOLOGY INFORMATION SYSTEM - BTIS) IS BOTH RELATIONAL AND RETRIEVABLE AND IS INTENDED FOR USE BY THE U.S. COAST GUARD. A HARD COPY OF BTIS IS CONTAINED IN APPENDIX B OF THIS REPORT AND IS SUPPORTED BY ILLUSTRATIONS OF ALL BUOYS IN APPENDIX C.

THE RESULTS OF ALL INTERVIEWS AND THE DATA OBTAINED ARE ANALYZED AND TRENDS ARE NOTED WITH REGARD TO IDENTIFICATION OF SIGNIFICANT AREAS FOR DEVELOPMENT OF AID TO NAVIGATION BUOYS FOR USE IN THE NEXT TASK (TASK C: RECOMMENDATIONS FOR DEVELOPMENT OF BUOY TECHNOLOGIES).

17. Key Words		18. Distribution Statement
FLOATING AIDS BUOYS ARTICULATED BEACONS NAVIGATION AUTHORITIES	WORLDWIDE MFG. BTIS DATABASE	DOCUMENT IS AVAILABLE TO THE U. S. PUBLIC THROUGH THE NATIONAL TECHNICAL INFORMATION SERVICE SPRINGFIELD, VA 22161

19. Security Classif. (of this report)	20. SECURITY CLASSIF. (of this page)	21. No. of Pages	22. Price
UNCLASSIFIED	UNCLASSIFIED	2231	

METRIC CONVERSION FACTORS

Approximate Conversions to Metric Measures

Symbol	When You Know	Multiply By	To Find	Symbol
		LENGTH		
in	inches	*2.5	centimeters	cm
ft	feet	30	centimeters	cm
yd	yards	0.9	meters	m
mi	miles	1.6	kilometers	km
		AREA		
in^2	square inches	6.5	square centimeters	cm^2
ft^2	square feet	0.09	square meters	m^2
yd^2	square yards	0.8	square meters	m^2
mi^2	square miles	2.6	square kilometers	km^2
	acres	0.4	hectares	ha
		MASS (WEIGHT)		
oz	ounces	28	grams	g
lb	pounds	0.45	kilograms	kg
	short tons (2000 lb)	0.9	tonnes	t
		VOLUME		
tsp	teaspoons	5	milliliters	ml
tbsp	tablespoons	15	milliliters	ml
fl oz	fluid ounces	30	milliliters	ml
c	cups	0.24	liters	l
pt	pints	0.47	liters	l
qt	quarts	0.95	liters	l
gal	gallons	3.8	liters	l
ft^3	cubic feet	0.03	cubic meters	m^3
yd^3	cubic yards	0.76	cubic meters	m^3
		TEMPERATURE (EXACT)		
°F	Fahrenheit temperature	5/9 (after subtracting 32)	Celsius temperature	°C

*1 in = 2.54 (exactly)

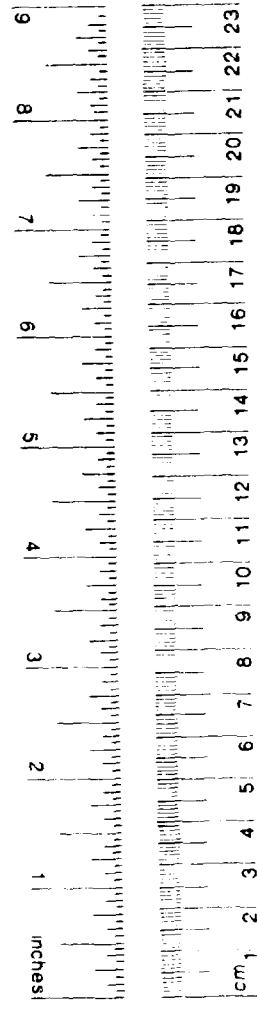

Approximate Conversions from Metric Measures

Symbol	When You Know	Multiply By	To Find	Symbol
		LENGTH		
mm	millimeters	0.04	inches	in
cm	centimeters	0.4	inches	in
m	meters	3.3	feet	ft
m	meters	1.1	yards	yd
km	kilometers	0.6	miles	mi
		AREA		
cm^2	square centimeters	0.16	square inches	in^2
m^2	square meters	1.2	square yards	yd^2
km^2	square kilometers	0.4	square miles	mi^2
ha	hectares (10,000 m^2)	2.5	acres	
		MASS (WEIGHT)		
g	grams	0.035	ounces	oz
kg	kilograms	2.2	pounds	lb
t	tonnes (1000 kg)	1.1	short tons	
		VOLUME		
ml	milliliters	0.03	fluid ounces	fl oz
l	liters	0.125	cups	c
l	liters	2.1	pints	pt
l	liters	1.06	quarts	qt
l	liters	0.26	gallons	gal
m^3	cubic meters	35	cubic feet	ft^3
m^3	cubic meters	1.3	cubic yards	yd^3
		TEMPERATURE (EXACT)		
°C	Celsius temperature	9/5 (then add 32)	Fahrenheit temperature	°F

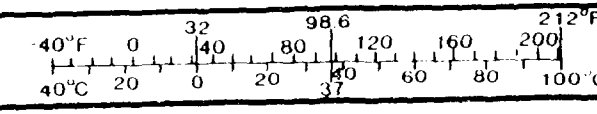

Volume III Appendix C Contents

Country of Use	Buoy Name	Drawing Reference
Australia	8 x 28 LIGHTED BUOY	Aust-1
Canada	FA-1001 1.4M LR	Canada 1 & 4
Canada	FA-1004 1.8m LR	Canada 1 & 5
Canada	FA-1007 2.9m LBR	Canada 1 & 6
Canada	FA-1010 2.9m LWR	Canada 1 & 7
Canada	FA-1015 3.0m SCOW	Canada 1 & 8
Canada	FA-1017 1.8m LR	Canada 1 & 9
Canada	FA-1019 1.5m DISCUS	Canada 1 & 10
Canada	FA-2001 0.8m Coastal Can	Canada 2 & 11
Canada	FA-2002 0.8m Coastal Conical	Canada 2 & 12
Canada	FA-2003 1.2m Coastal Can	Canada 2 & 13
Canada	FA-2004 1.2m Coastal Conical	Canada 2
Canada	FA-2005 1.6m Coastal Can	Canada 2 & 14
Canada	FA-2006 1.6m Coastal Conical	Canada 2 & 15
Canada	FA-2007 2.0m Coastal Conical	Canada 2 & 16
Canada	FA-2008 0.9m River Conical	Canada 2 & 17
Canada	FA-2009 0.9m River Can	Canada 2 & 18
Canada	FA-2010 1.2m River Conical	Canada 2 & 19
Canada	FA-2011 1.2m River Can	Canada 2 & 20
Canada	FA-2012 0.6m Mackenzie River-C	Canada 2 & 21
Canada	FA-2013 0.6m Mackenzie River-N	Canada 2 & 22
Canada	FA-2014 Canol Type Boat	Canada 2 & 25
Canada	FA-2015 0.4m Mackenzie River-C	Canada 2 & 23
Canada	FA-2016 0.4m Mackenzie River-N	Canada 2 & 24
Canada	FA-3001 1.0m Ice, Can	Canada 3 & 26
Canada	FA-3002 1.0m Ice, Conical	Canada 3 & 27
Canada	FA-3003 0.7m Ice, Can	Canada 3 & 28
Canada	FA-3004 0.7m Ice, Conical	Canada 3 & 29
Canada	FA-3005 0.6m SPAR	Canada 3 & 30
Canada	FA-3006 0.6m SPAR, (Short)	Canada 3 & 31
Canada	FA-3007 0.3m SPAR, Ottawa Rvr	Canada 3 & 32
Canada	FA-3008 Vari.Buoyancy FRP SPAR	Canada 3 & 33
Denmark	Integrated Modular Buoy	Denmark - 24
Denmark	Jernvager I Type C Unlighted	Denmark 17
Denmark	Jernvager I Type K Unlighted	Denmark 18
Denmark	Jernvager Type S Unlighted	Denmark 19
Denmark	Lighted Racon Buoy Model 2	Denmark 16
Denmark	Type 11, Cylind. Top, Lighted	Denmark 10
Denmark	Type 12, Conical Top, Lighted	Denmark 1
Denmark	Type 13, Cylind. Top, Lighted	Denmark 11
Denmark	Type 14, Conical Top, Lighted	Denmark 2
Denmark	Type 15, Cylind. Top, Lighted	Denmark 15
Denmark	Type 16, Conical Top, Lighted	Denmark 8
Denmark	Type 21, Cylind. Top, Lighted	Denmark 12
Denmark	Type 22, Conical Top Lighted	Denmark 3
Denmark	Type 25, Cylind. Top, Lighted	Denmark 14
Denmark	Type 26, Conical Top, Lighted	Denmark 5
Denmark	Type 31, Cylind. Top, Lighted	Denmark 13
Denmark	Type 32 Conical Top, Lighted	Denmark 4
Denmark	Type 43 Ocean Conical, Lighted	Denmark 6
Denmark	Type 52 Ocean Conical, Lighted	Denmark 7
Denmark	Type 62 Conical, Lighted	Denmark 9
Denmark	Vager I Unlighted	Denmark 20

Country of Use	Buoy Name	Drawing Reference
Denmark	Vager II Unlighted	Denmark 21
Denmark	Vager III Unlighted	Denmark 22
Denmark	Vager IV Unlighted	Denmark 23
England	9'0" General Purpose Unlighted	England 12
England	Cardinal Class I, 10x50 LWBR	England 5
England	Cardinal Class I, 10x51 LWBR	England 4
England	Cardinal Class II Pillar Mk. I	England 7
England	Class 1 Can	England 15
England	Class 1 Conical	England 15
England	Class 1 Spherical	England 15
England	Class 2 Can	England 15
England	Class 2 Conical	England 15
England	Class 2 Spherical	England 15
England	Class 3 Can	England 15
England	Class 3 Conical	England 15
England	Class 3 Spherical	England 15
England	Class 4 Can	England 15
England	Class 4 Conical	England 15
England	Class 4 Spherical	England 15
England	Class 5 Can	England 15
England	Class 5 Conical	England 15
England	Class 5 Spherical	England 15
England	Class V conical, lighted	England 14
England	High Focal Plane, 10x39 LWR	England 3
England	High Focal Plane, 10x43 LWR	England 2
England	High Focal Plane, 10x44 LWR	England 1
England	Keel Type Auto CO2 Bell, Light	England 10
England	Keel Type Lighted Gas	England 8
England	Lighted Vessel Watch	England 16
England	Short Pillar Lighted Acetylene	England 6
England	Small Electric Lighted, "Bury"	England 13
England	Special Can	England 16
England	Spherical Mooring	England 16
England	Spherical Top	England 16
England	Standard GRP 3 Meter Lighted.	England 11
England	Std 4 Pocket Lighted Acetylene	England 9
England	Wreck/Nun	England 16
England MFG 1	950 Series Marker (3.1x5.8 L)	England MFG 1-1&1-15
England MFG 1	EF120L Marker Buoy (3.9x9 L)	England MFG 1-1& 1-2
England MFG 1	EF15L Class V (4.9x10 LR)	England MFG 1-1& 1-3
England MFG 1	EF15P Class V (4.9x14 LR)	England MFG 1-1&1-4
England MFG 1	EF18L Class IV (5.9x13 LR)	England MFG 1-1&1
England MFG 1	EF18P Class IV (5.9x18 LR)	England MFG 1-1&1
England MFG 1	EF20L (6.6x13 LR)	England MFG 1-1&1-
England MFG 1	EF20P (6.6x18 LR)	England MFG 1-1& 1-8
England MFG 1	EF25L Class III (8.2x16 LR)	England MFG 1-1&1-9
England MFG 1	EF25P Class III (8.2x25 LR)	England MFG 1-1&1-10
England MFG 1	EF30L Class II (9.8x18 LR)	England MFG 1-1&1-11
England MFG 1	EF30P Class II (9.8x27 LR)	England MFG 1-1&1-1.
England MFG 1	EF36L Class I (11.8x18 LR)	England MFG 1-1&1-1
England MFG 1	EF36P Class I (11.8x27 LR)	England MFG 1-1&1-14
England MFG 1	L11 (3.6 x 6.7 LR)	England MFG 1-1&1-16
England MFG 1	L16 (5.3x9.2 LR)	England MFG 1-1&1-18

Country of Use	Buoy Name	Drawing Reference
England MFG 1	L21 (6.9x12 LR)	England MFG 1-1&1-20
England MFG 1	L40 (13.1x18 LR)	England MFG 1-1&1-22
England MFG 1	P11 (3.6x10 LR)	England MFG 1-1&1-17
England MFG 1	P16 (5.3x13 LR)	England MFG 1-1&1-19
England MFG 1	P21 (6.9x17 LR)	England MFG 1-1&1-21
England MFG 1	P40 (13.1x30 LR)	England MFG 1-1&1-23
England MFG 1	SG2 Spar (1.3x20 LRS)	England MFG 1-1&1-24
England MFG 1	SG7 Spar (1.3x17 LRS)	England MFG 1-1&1-24
England MFG 2	Class II, Reinf. Plastic Struc	England MFG 2-1
England MFG 2	Class III, Reinf. Plastic Str.	England MFG 2-1
England MFG 2	Class V, Reinf. Plastic Struct	England MFG 2-1
England MFG 2	Class VI, Conical	England MFG 2-1
England MFG 2	Class VI, Dished	England MFG 2-1
England MFG 2	Reinforced Plastic Struct-SPAR	England MFG 2-1
England MFG 3	BC-21 Catamaran (6.6x9.8 LR)	England MFG 3-1 &3-2
England MFG 3	BC-22 Catamaran (9.0x16 LR)	England MFG 3-1 &3-2
England MFG 3	BS-13 (3.3x5.8 LR)	England MFG 3-1 &3-3
England MFG 3	BS-14 (3.6x5.7 LR)	England MFG 3-1 &3-3
England MFG 3	BS-16 (5.3x8.1 LR)	England MFG 3-1 &3-3
England MFG 3	BS-1830 (5.9x17 LR)	England MFG 3-1 &3-4
England MFG 3	BS-2230 (7.2x17 LR)	England MFG 3-1 &3-4
England MFG 3	BS-2240 (7.2x21 LR)	England MFG 3-1 &3-4
England MFG 3	BS-2630 (8.5x17 LR)	England MFG 3-1 &3-4
England MFG 3	BS-2640 (8.5x20 LR)	England MFG 3-1 &3-4
England MFG 3	BS-2650 (8.5x24 LR)	England MFG 3-1 &3-4
England MFG 3	BS-3030 (9.8x17 LR)	England MFG 3-1 &3-4
England MFG 3	BS-3040 (9.8x20 LR)	England MFG 3-1 &3-4
England MFG 3	BS-3050 (9.8x24 LR)	England MFG 3-1 &3-4
England MFG 3	BS-41 MKII (7.6x21 LR)	England MFG 3-1 &3-3
England MFG 3	BT-1115 (3.6x10 LR)	England MFG 3-1 &3-5
England MFG 3	BT-1125 (3.6x13 LR)	England MFG 3-1 &3-5
England MFG 3	BT-1830 (5.9x23 LR)	England MFG 3-1 &3-5
England MFG 3	BT-1840 (5.9x26 LR)	England MFG 3-1 &3-5
England MFG 3	BT-2240 (7.2x25 LR)	England MFG 3-1 &3-5
England MFG 3	BT-2250 (7.2x28 LR)	England MFG 3-1 &3-5
England MFG 3	BT-2640 (8.5x25 LR)	England MFG 3-1 &3-5
England MFG 3	BT-2650 (8.5x28 LR)	England MFG 3-1 &3-5
England MFG 3	BT-2665 (8.5x35 LR)	England MFG 3-1 &3-5
England MFG 3	BT-3040 (9.8x25 LR)	England MFG 3-1 &3-5
England MFG 3	BT-3050 (9.8x28 LR)	England MFG 3-1 &3-5
England MFG 3	BT-3065 (9.8x33 LR)	England MFG 3-1 &3-5
England Mfg-4	ELASTOMER "SOFT" BUOY	England Mfg 4-1
Finland	1.0m x 10m Plastic Pillar	Finland 1, 4 & 5
Finland	1.6m x 14m Plastic Pillar	Finland 1
Finland	160mm x 6m Plastic Spar	Finland 1, 5 & 6
Finland	225mm x 6 m Lighted Plast.Spar	Finland 1, 5 & 6
Finland	225mm x 7m Plastic Spar	Finland 1, 5 & 6
Finland	3m x 17m Steel Ice Buoy	Finland 1
Finland	50/120 Plastic Spar Unlighted	Finland 1 & 5
Finland	500mm x 6m Plastic Pillar	Finland 1, 4 & 5
Finland	JPK 130-1050 Steel Ice Buoy	Finland 1,2 and 3
Finland	JPK 130-550 Steel Ice Buoy	Finland 1 & 2
Finland MFG-1	90/160 Plastic Spar	Finland 1 & 5

Country of Use	Buoy Name	Drawing Reference
France	12 M3 Lighted Buoy With Tail	France - 12
France	18 M3 Lighted Buoy With Tail	France - 13
France	7.5 M3 Lighted Buoy With Tail	France - 11
France	DELPHINE Flat Bottom Lighted	France-14
France	DELPHINE Improved Stability	France-15
France	Flat Bottom Lighted 5 cu. m.	France - 2
France	Intermediate Buoy-Lighted	France - 1
France	Lighted Marina Buoy	France-10
France	Marina Buoy-Cardinal Unlighted	France-10
France	Marina Buoy-Lateral Unlighted	France-10
France	NOLWEN Flat Bottom Form Tower	France - 5
France	NOLWEN Flat Bottom Lattice Twr	France - 4
France	NOLWEN II Type Lighted Buoy	France - 6
France	NOLWEN Tail-Tube Solar	France - 3
France	Polyester Buoy	France-7, 8, 9
France MFG-1	ARTEMIS Lighted Buoy	France MFG 1-1
France MFG-1	DAPHNE Lighted Buoy	France MFG 1-2
Germany	Inland lighted STD steel	Germany-9
Germany	Inland Unlighted STD Steel	Germany-10
Germany	Leuchttonne 61	Germany-3
Germany	Leuchttonne 61 with reflector	Germany-4
Germany	Leuchttonne 72	German-5
Germany	Leuchttonne 81 Emden	Germany-11
Germany	Leuchttonne 81 standard	Germany-6
Germany	Leuchttonne 81-High Tower I	Germany-8
Germany	Leuchttonne 81-High Tower II	Germany-7
Germany	Modular Buoy	Germany - 12
Germany	T-86 Conical Buoy-Unlighted.	Germany-2
Germany	T-86 Spar Buoy-Unlighted	Germany-1
Germany MFG-1	Dpwtr Lt Buoy Type DW180G	Germany MFG 1-1
Germany MFG-1	Dpwtr Lt Buoy Type DW240G	Germany MFG 1-2
Germany MFG-1	Dpwtr Lt Buoy Type DW260G	Germany MFG 1-3
Germany MFG-1	Dpwtr Lt Buoy Type DW280G	Germany MFG 1-4
Germany MFG-1	Shalw Wtr LT Buoy Type SW160E	Germany MFG 1-9
Germany MFG-1	Shalw Wtr Lt Buoy Type SW200E	Germany MFG 1-10
Germany MFG-1	Shalw Wtr Lt Buoy Type SW220E	Germany MFG 1-11
Germany MFG-1	Shalw Wtr Lt Buoy Type SW220G	Germany MFG 1-5
Germany MFG-1	Shalw Wtr Lt Buoy Type SW240G	Germany MFG 1-6
Germany MFG-1	Shalw Wtr Lt Buoy Type SW260E	Germany MFG 1-12
Germany MFG-1	Shalw Wtr Lt Buoy Type SW260G	Germany MFG 1-7
Germany MFG-1	Shalw Wtr Lt Buoy Type SW300G	Germany MFG 1-8
India Mfg-1	CP-2800 CATAMARAN BUOY	India Mfg 1-3
India Mfg-1	SKP-1600 Nav. Buoy	India Mfg 1-1
India Mfg-1	SKP-2500 NAV BUOY	India Mfg 1-2
India Mfg-1	TT-2600 OPEN SEA NAV BUOY	India Mfg 1-4
Italy MFG 1	Deepwater Tension Beacon	Italy MFG 1
Italy MFG 1	Standard Elastic Beacon	Italy MFG 1
Italy MFG 2	Elastic Beacon	Italy MFG 2
Japan	L-1 (8.5x31 L) Battery Type	Japan 1 & 3
Japan	L-1 (8.5x31 L) Wave Generator	Japan 1 & 2
Japan	L-2 (9.2x34 L) Battery Type	Japan 1 & 5
Japan	L-2 (9.2x34 L) Wave Generator	Japan 1 & 4
Japan	L-3 (10.5x38 L) Battery Type	Japan 1

Country of Use	Buoy Name	Drawing Reference
Japan	L-3 (10.5x38 L) Wave Generator	Japan 1 & 6
Japan	L-4 (20x53 LR) Wave Generator	Japan 1 & 7
Japan	L-5 (13.1x23 LR)	Japan 1
Japan	L-6 (16x25 LR)	Japan 1 & 8
Japan	L-H (6.9x22 L)	Japan 1 & 9
Japan	L-U (7.9x20 L)	Japan 1 & 10
Japan	Segiyosetoho Resilient Becon	Japan 13
Japan	U-H Conical (NUN)	Japan 1 & 11
Japan	U-H Cylinder (CAN)	Japan 1 & 11
Japan	U-HP Plastic CAN	Japan 12
Japan MFG 1	LP-1A (7.2 x 27 LR)	Japan MFG 1-3
Japan MFG 1	NKK 1.5m (4.9 x 22 LR)	Japan MFG 1-2
Japan MFG 1	NLB-1000 (3.28 x 15 L)	Japan MFG 1-1
Japan MFG 1	NLB-600 (1.97 x 10 L)	Japan MFG 1-1
Japan MFG 1	NLB-800 (2.62 x 12 L)	Japan MFG 1-1
Japan MFG 2	AB-200 (3.0 x 15 L)	Japan MFG 2-11
Japan MFG 2	CB-100 (1.6 x 5.9 L)	Japan MFG 2-14
Japan MFG 2	CB-200 (1.6 x 9.3 L)	Japan MFG 2-13
Japan MFG 2	H-290 (4.9 x 19 LR)	Japan MFG 2-8
Japan MFG 2	M-250C (3.9 x 18 L)	Japan MFG 2-9
Japan MFG 2	M-350T (6.4 x 25 LR)	Japan MFG 2-7
Japan MFG 2	MLTV-10RA (5.9 x 57 LS)	Japan MFG 2-15
Japan MFG 2	MLTV-11S (6.6 x 56 LS)	Japan MFG 2-15
Japan MFG 2	MLTV-15RA (7.6 x 72 LS)	Japan MFG 2-15
Japan MFG 2	MLTV-19RA (8.2 x 92 LS)	Japan MFG 2-15
Japan MFG 2	MLTV-7S (4.6 x 36 LS)	Japan MFG 2-15
Japan MFG 2	MS-400 (7.9 x 20 L)	Japan MFG 2-6
Japan MFG 2	MS-500 (9.4 x 24 L)	Japan MFG 2-5
Japan MFG 2	SA-200 (1.6 x 13 L)	Japan MFG 2-12
Japan MFG 2	SAB-300 (3.6 x 18 L)	Japan MFG 2-10
Japan MFG 2	T-11 WAG (9.8 x 45 LR)	Japan MFG 2-1
Japan MFG 2	T-360S WAG (7.3 x 20 L)	Japan MFG 2-2
Japan MFG 2	T3-2 WAG (6.4 x 25 LR)	Japan MFG 2-3
Japan MFG 2	TS-300 WAG (4.5 x 21 L)	Japan MFG 2-4
Japan MFG 3	ZCB-160 (5.3 x 23 L)	Japan MFG 3-1 & 3-3
Japan MFG 3	ZCB-240D (7.9 x 13 L)	Japan MFG 3-1 & 3-3
Japan MFG 3	ZCB-350D (11.5 x 16 LR)	Japan MFG 3-1 & 3-3
Japan MFG 3	ZCB-603D (20x25 LR)	Japan MFG 3-1 & 3-3
Japan MFG 3	ZSB-100 (3.3 x 29 LS)	Japan MFG 3-1 & 3-4
Japan MFG 3	ZSB-120 (3.9 x 35 LS)	Japan MFG 3-1 & 3-4
Japan MFG 3	ZSB-140P (4.6 x 40 LS)	Japan MFG 3-1 & 3-4
Japan MFG 3	ZSB-160 (5.3 x 37 LS)	Japan MFG 3-1 & 3-4
Japan MFG 3	ZSB-210 (6.9 x 49 LS)	Japan MFG 3-1 & 3-4
Japan MFG 3	ZSB-220W (7.2 x 78 LS)	Japan MFG 3-1 & 3-4
Japan MFG 3	ZSB-240 (7.9 x 86 LSR)	Japan MFG 3-1 & 3-4
Japan MFG 3	ZSB-280 (9.2 x 95 LSR)	Japan MFG 3-1 & 3-4
Japan MFG 3	ZSB-300 (9.8 x 117 LSR)	Japan MFG 3-1 & 3-4
Japan MFG 3	ZSB-320 (10.5 x 133 LSR)	Japan MFG 3-1 & 3-4
Japan MFG 3	ZSB-60 (2.0 x 24 LS)	Japan MFG 3-1 & 3-4
Japan MFG 3	ZSB-80 (2.6 x 24 LS)	Japan MFG 3-1 & 3-4
Japan MFG 3	ZWB-115 (3.7 x 18 L)	Japan MFG 3-1 & 3-[illegible]
Japan MFG 3	ZWB-120S (3.9 x 9 L)	Japan MFG 3-1 & 3-[illegible]
Japan MFG 3	ZWB-130 (4.3 x 15 L)	Japan MFG 3-1 & 3-[illegible]

Country of Use	Buoy Name	Drawing Reference
Japan MFG 3	ZWB-160 (5.3 x 20 L)	Japan MFG 3-1 & 3-2
Japan MFG 3	ZWB-250 (8.2 x 30 L)	Japan MFG 3-1 & 3-2
Netherlands	12.5M3 Light bucy (10.5x19 LR)	Netherlands 1 & 3
Netherlands	6.5M3 Light buoy (8.4x17 LR)	Hol 2 & 3
Netherlands MFG-1	Solar Buoy Type SW160EZ	Netherlands MFG 1-1
Netherlands MFG-1	Solar Buoy Type SW180BZ	Netherlands MFG 1-2
Netherlands MFG-1	Solar Buoy Type SW200EZ	Netherlands MFG 1-3
Netherlands MFG-1	Solar Buoy Type SW220EZ	Netherlands MFG 1-4
Netherlands MFG-1	Solar Buoy Type SW260EZ	Netherlands MFG 1-5
Netherlands Mfg-2	ALL WEATHER DUTY BUOY	Netherlands Mfg 2-1
Norway	F-180/B-50 Lighted Steel Buoy	Norway - 5
Norway	Seawater Battery Powered Buoy	Norway - 6
Norway	Selco Type 26 Lighted Buoy	Norway - 4
Norway	Selco Type 5 Spar Buoy	Norway-1
Norway	SELCO Type 7 Spar Buoy	Norway - 2
Norway	SELCO Type 8 Spar Buoy	Norway - 3
Norway MFG-1	SELCO Marker Buoy Type 26A	Norway - MFG-1-11
Norway MFG-1	SELCO Marker Buoy Type 26B	Norway - MFG-1-10
Norway MFG-1	SELCO Type 10 Spherical Buoy	Norway MFG-1-4
Norway MFG-1	SELCO Type 11 Discus Buoy	Norway MFG-1-5
Norway MFG-1	SELCO Type 16 Spar Buoy	Norway MFG-1-6
Norway MFG-1	SELCO Type 23 Elliptical Buoy	Norway - MFG-1-7
Norway MFG-1	SELCO Type 24 Spherical Buoy	Norway - MFG-1-8
Norway MFG-1	SELCO Type 25 Spherical Buoy	Norway MFG-1-9
Norway MFG-1	SELCO Type 4 Spar Buoy	Norway - MFG-1-1
Norway MFG-1	SELCO Type 6 Spar Buoy	Norway MFG-1-2
Norway MFG-1	SELCO Type 9 Spherical Buoy	Norway MFG-1-3
Peoples Rep of China	HF 2.4 - D1 LIGHTED BUOY	China, Mfg 1-2
Peoples Rep of China	WAVE POWERED LIGHT BUOY	China Mfg 1-1
South Africa	DOUBLE HULL LIGHTED BUOY	S. Africa-1
USA	1 CR, 1952 Type Standard	USA-20
USA	1 NR, 1952 Type Standard	USA-21
USA	2 CFR	USA 42
USA	2 CR, 1952 Type Standard	USA-22
USA	2 NFR	USA 42
USA	2 NR, 1952 Type Standard	USA-23
USA	3 CFR	USA 43
USA	3 CI, 1982 Type Standard	USA-26
USA	3 CR, 1952 Type Standard	USA-24
USA	3 NFR	USA 43
USA	3 NI, 1982 Type Standard	USA-27
USA	3 NR, 1952 Type Standard	USA-25
USA	3-1 2x8 LR, 1965 Type Standard	USA-15
USA	4 CFR	USA 44
USA	4 CR, 1952 Type Standard	USA-28
USA	4NFR	USA 44
USA	4NR, 1952 Type Standard	USA-29
USA	5 CFR	USA 45
USA	5 CI, 1981 Type Standard	USA-30
USA	5 CPR, 1972 Type Standard	USA-32
USA	5 NFR	USA 45
USA	5 NI, 1981 Type Standard	USA-31
USA	5 NPR, 1972 Type Standard	USA-33

Country of Use	Buoy Name	Drawing Reference
USA	5X11 LR, 1965 Type Standard	USA-14
USA	6 CFR	USA 46
USA	6 CPR, 1972 Type Standard	USA-38
USA	6 CR, 1952 Type Standard	USA-34
USA	6 CT, 1952 Type Standard	USA-36
USA	6 NFR	USA 46
USA	6 NPR, 1972 Type Standard	USA-39
USA	6 NR, 1952 Type Standard	USA-35
USA	6 NT, 1952 Type Standard	USA-37
USA	6X20 LBR, 1962 Type Standard	USA-12
USA	6X20 LR, 1962 Type Standard	USA-11
USA	7X17 LR, 1962 Type Standard	USA-10
USA	7x20 LI, 1982 Type Standard	USA-13
USA	8X26 LBR, 1962 Type Standard	USA-7
USA	8X26 LGR, 1962 Type Standard	USA-8
USA	8X26 LR, 1962 Type Standard	USA-6
USA	8X26 LWR, 1962 Type Standard	USA-9
USA	8X26 WR, 1962 Type Standard	USA-19
USA	9x20 BR, 1962 Type Standard	USA-17
USA	9x20 GR, 1962 Type Standard	USA-18
USA	9X32 LBR, 1962 Type Standard	USA-2
USA	9X32 LGR, 1962 Type Standard	USA-3
USA	9X32 LR, 1962 Type Standard	USA-1
USA	9X32 LWR, 1962 Type Standard	USA-4
USA	9X35 LR, 1983 Type Standard	USA-5
USA	Discrepancy Buoy	USA-16
USA	FCPR Buoy	USA-40
USA	FNPR Buoy	USA-41
USA MFG 1	SAB-12 Sent. Articulated Buoy	USA MFG 1-9
USA MFG 1	SB-138 Sentinel	USA MFG 1-4
USA MFG 1	SB-510 Sentinel	USA MFG 1-3
USA MFG 1	SB-612 Sentinel	USA MFG 1-2
USA MFG 1	SB-826 Sentinel Series C	USA MFG 1-1
USA MFG 1	SB1M Buoy	USA MFG 1-8
USA MFG 1	SB2.5M Buoy	USA MFG 1-6
USA MFG 1	SB2M Buoy	USA MFG 1-5
USA MFG 1	SB3M Buoy	USA MFG 1-7
USA MFG 1	SF-5 Spar Buoy	USA MFG 1-10
USA MFG 1	UF-210 Spherical Buoy	USA MFG 1-11
USA MFG 2	BA-17C (1.7x6.7 C)	USA MFG 2-1 & 2-9
USA MFG 2	BA-17N (1.7x7.2 N)	USA MFG 2-1 & 2-9
USA MFG 2	BA-28C (2.3x7.3 C)	USA MFG 2-1 & 2-9
USA MFG 2	BA-28N (2.3x7.7 N)	USA MFG 2-1 & 2-9
USA MFG 2	BA-323C (1.7x5.5 C)	USA MFG 2-1 & 2-9
USA MFG 2	BA-323N (1.7x5.5 N)	USA MFG 2-1 & 2-9
USA MFG 2	BC-3, Class III (3X8 CR)	USA MFG 2-7
USA MFG 2	BC-4, Class II (4X14 CR)	USA MFG 2-7
USA MFG 2	BC-5, Class I (5X18 CR)	USA MFG 2-7
USA MFG 2	BL-250 (2.5X12 LR)	USA MFG 2-1 & 2-7
USA MFG 2	BL-358 (3.5X8.5 LR)	USA MFG 2-1 & 2-5
USA MFG 2	BL-511 (5X12 LR)	USA MFG 2-1 & 2-4
USA MFG 2	BL-620 (6X20 LR)	USA MFG 2-1 & 2-2
USA MFG 2	BL-717 (7X17 LR)	USA MFG 2-1 & 2-3

Country of Use	Buoy Name	Drawing Reference
USA MFG 2	BL-826 (8X27 LR)	USA MFG 2-1 & 2-2
USA MFG 2	BN-3, Class III (3X9 NR)	USA MFG 2-8
USA MFG 2	BN-4, Class II (4X15 NR)	USA MFG 2-8
USA MFG 2	BN-5, Class I (5X20 NR)	USA MFG 2-8
USA MFG 2	Buoyant Beacon	USA MFG 2-1 & 2-10
USA MFG 3	5 CFLR	USA MFG 3
USA MFG 4	CM30	USA MFG 4-4
USA MFG 4	MBP-60	USA MFG 4-1 & 4-2
USA MFG 4	RM-30	USA MFG 4-1 & 4-3
USA MFG-5	ELASTOMER/FOAM SPAR BUOY	USA Mfg 5-1

DISTRIBUTION OF BUOY RECORDS IN BTIS DATABASE

BY COUNTRIES AND MANUFACTURERS

Country	Authority/Mfg.	No. of Records	Name of Source
Australia	Authority	1	Dept. of Trans. & Comm'cn
Canada	Authority	31	Canadian Coast Guard
China (P.R. of)	Manufacturer 1	2	Shanghai Nav Aids Fact.
Denmark	Authority	24	Farvandsvaesenet
England	Authority	34	Trinity House
	Manufacturer 1	24	Balmoral
	Manufacturer 2	6	Reinforced Plastic Str.
	Manufacturer 3	27	Pharos Marine
	Manufacturer 4	1	Hippo Marine
Finland	Authority	10	Merenkulkuhallitus
	Manufacturer 1	1	KWH Pipe
France	Authority	15	Phares & Balises
	Manufacturer 1	2	Gisman
Germany	Authority	12	Seezeichenversuchsfeld
	Manufacturer 1	12	Pintsch Bamag
India	Manufacturer 1	4	ANA Nav Aids
Italy	Manufacturer 1	2	Resinex Offshore
	Manufacturer 2	1	Floatex

DISTRIBUTION OF BUOY RECORDS IN BTIS DATABASE

BY COUNTRIES AND MANUFACTURERS

Country	Authority/Mfg.	No. of Records	Name of Source
Japan	Authority	15	Maritime Safety Agency
	Manufacturer 1	5	Nippon Kogi Kogyo
	Manufacturer 2	19	Ryoskuseisha
	Manufacturer 3	21	Zeni Lite Buoy
The Netherlands	Authority	2	DGSM
	Manufacturer 1	5	Stromag/P. Bamag
	Manufacturer 2	1	All Marine
Norway	Authority	6	Kystdirektoratet
	Manufacturer 1	11	Ticon Plast
South Africa	Authority	1	S.A. Harbors Authority
U.S.A.	Authority	51	U.S. Coast Guard
	Manufacturer 1	11	Tideland Signals
	Manufacturer 2	19	Automatic Power
	Manufacturer 3	1	Gilman Corp.
	Manufacturer 4	3	Urethane Technologies
	Manufacturer 5	1	Seaward International
Total Number of Records in BTIS Database		381	

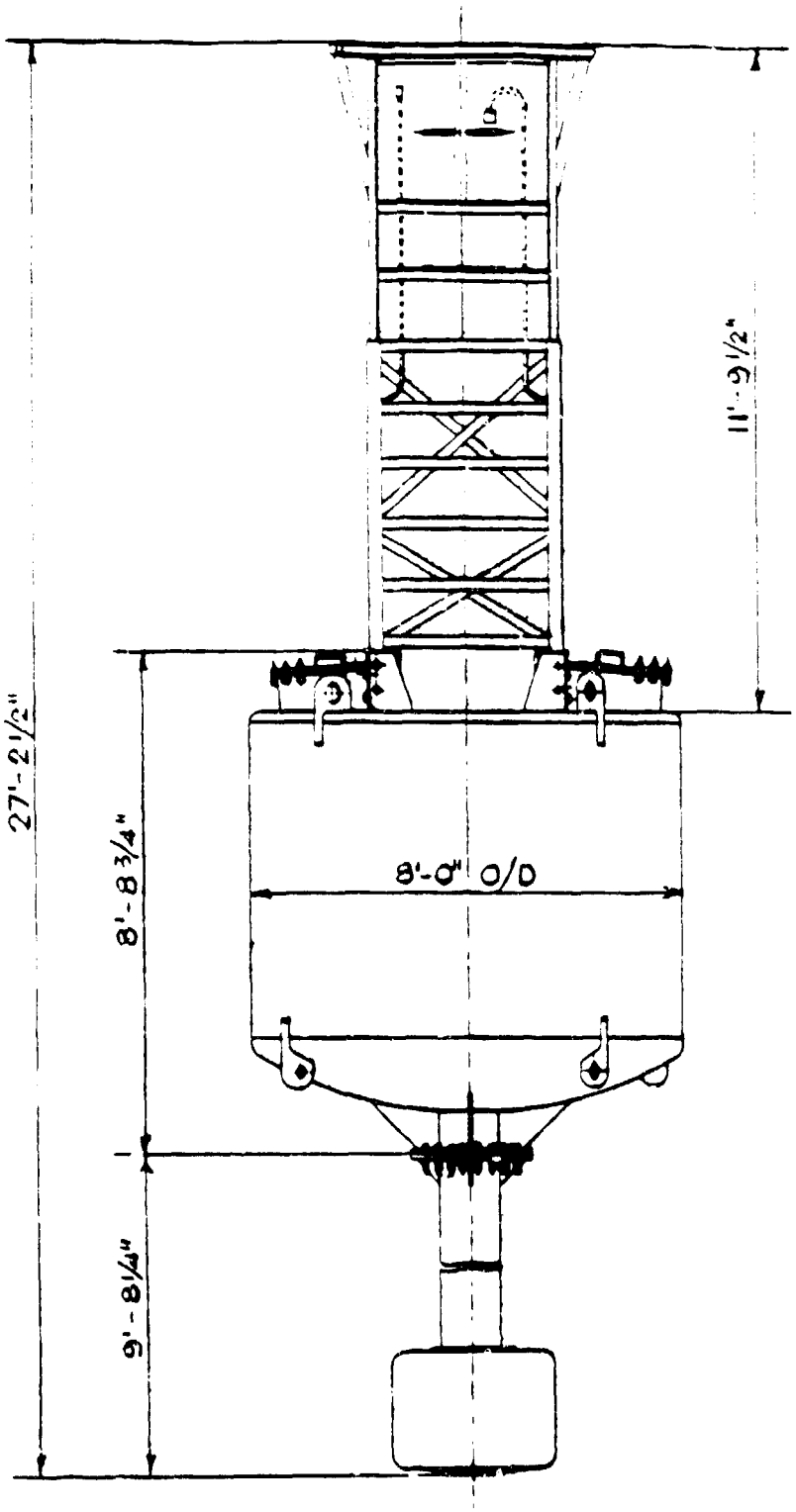

AUSTRALIA - 1

THIS PAGE INTENTIONALLY LEFT BLANK

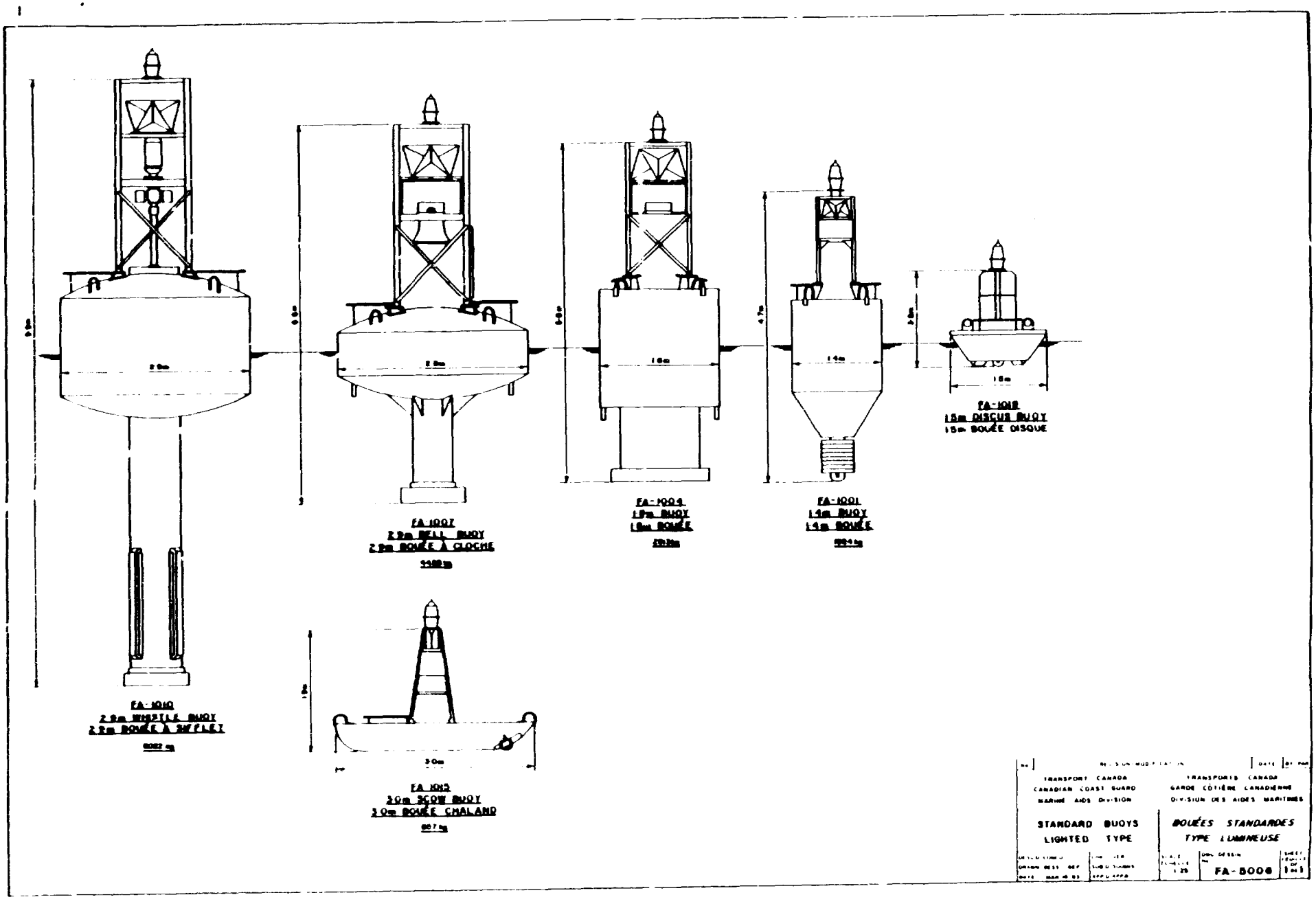
FA-1010
2.9m WHISTLE BUOY
2.9m BOUÉE À SIFFLET
FA-1007
2.9m BELL BUOY
2.9m BOUÉE À CLOCHE
FA-1004
1.8m BUOY
1.8m BOUÉE
FA-1001
1.4m BUOY
1.4m BOUÉE
FA-1018
1.5m DISCUS BUOY
1.5m BOUÉE DISQUE
FA-1015
3.0m SCOW BUOY
3.0m BOUÉE CHALAND
TRANSPORT CANADA
CANADIAN COAST GUARD
MARINE AIDS DIVISION
TRANSPORTS CANADA
GARDE CÔTIÈRE CANADIENNE
DIVISION DES AIDES MARITIMES
STANDARD BUOYS
LIGHTED TYPE
BOUÉES STANDARDES
TYPE LUMINEUSE
FA-5008

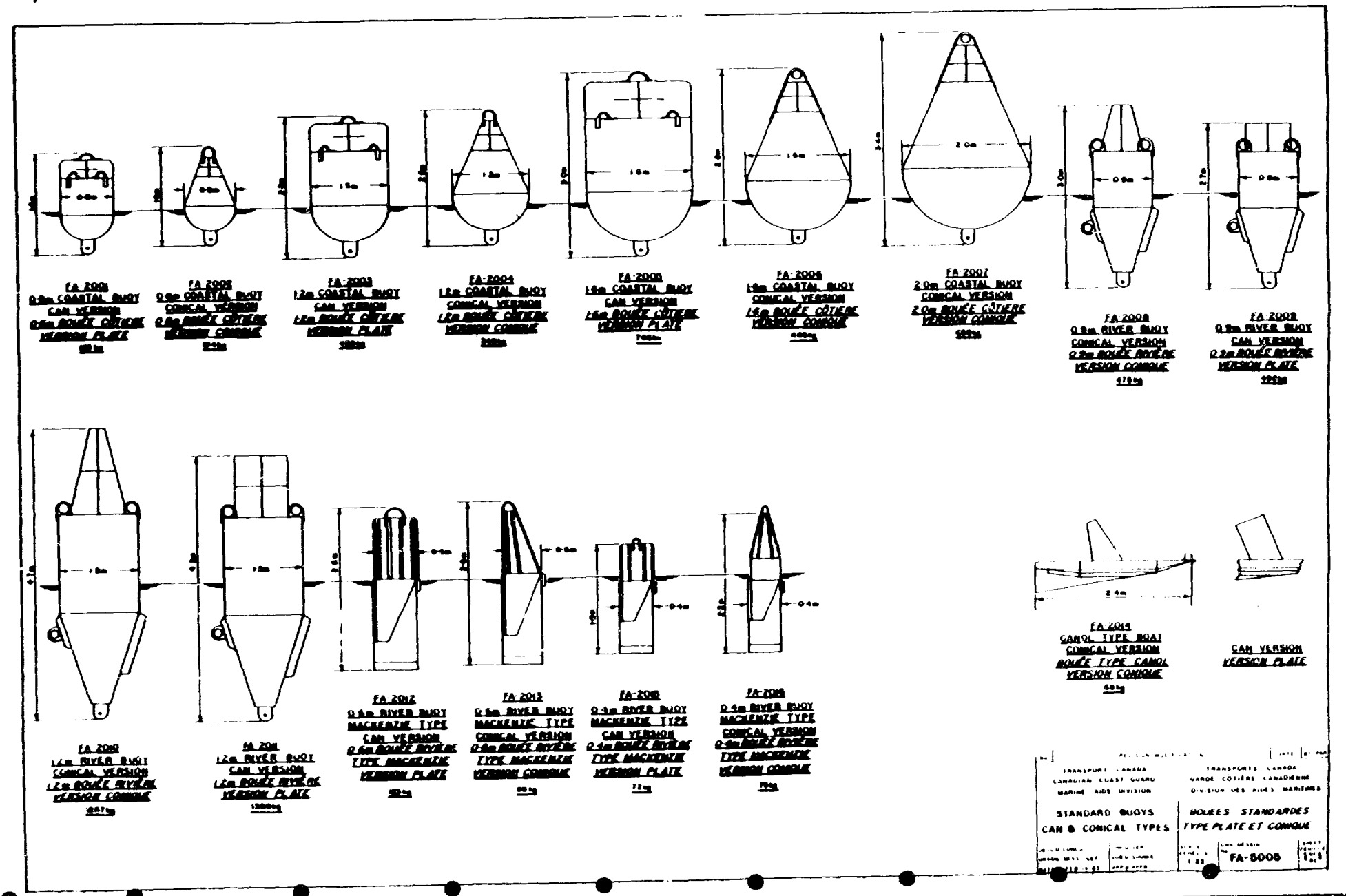
FA-2001
0.9m COASTAL BUOY
CAN VERSION
0.9m BOUÉE CÔTIÈRE
VERSION PLATE
FA-2002
0.9m COASTAL BUOY
CONICAL VERSION
0.9m BOUÉE CÔTIÈRE
VERSION CONIQUE
FA-2003
1.2m COASTAL BUOY
CAN VERSION
1.2m BOUÉE CÔTIÈRE
VERSION PLATE
FA-2004
1.2m COASTAL BUOY
CONICAL VERSION
1.2m BOUÉE CÔTIÈRE
VERSION CONIQUE
FA-2005
1.6m COASTAL BUOY
CAN VERSION
1.6m BOUÉE CÔTIÈRE
VERSION PLATE
FA-2006
1.6m COASTAL BUOY
CONICAL VERSION
1.6m BOUÉE CÔTIÈRE
VERSION CONIQUE
FA-2007
2.0m COASTAL BUOY
CONICAL VERSION
2.0m BOUÉE CÔTIÈRE
VERSION CONIQUE
FA-2008
0.9m RIVER BUOY
CONICAL VERSION
0.9m BOUÉE RIVIÈRE
VERSION CONIQUE
FA-2009
0.9m RIVER BUOY
CAN VERSION
0.9m BOUÉE RIVIÈRE
VERSION PLATE
FA-2010
1.2m RIVER BUOY
CONICAL VERSION
1.2m BOUÉE RIVIÈRE
VERSION CONIQUE
FA-2011
1.2m RIVER BUOY
CAN VERSION
1.2m BOUÉE RIVIÈRE
VERSION PLATE
FA-2012
0.6m RIVER BUOY
MACKENZIE TYPE
CAN VERSION
0.6m BOUÉE RIVIÈRE
TYPE MACKENZIE
VERSION PLATE
FA-2013
0.6m RIVER BUOY
MACKENZIE TYPE
CONICAL VERSION
0.6m BOUÉE RIVIÈRE
TYPE MACKENZIE
VERSION CONIQUE
FA-2014
GANOL TYPE BOAT
CONICAL VERSION
BOUÉE TYPE GANOL
VERSION CONIQUE
CAN VERSION
VERSION PLATE
TRANSPORT CANADA
CANADIAN COAST GUARD
MARINE AIDE DIVISION
TRANSPORTS CANADA
GARDE CÔTIÈRE CANADIENNE
DIVISION DES AIDES MARITIMES
STANDARD BUOYS
CAN & CONICAL TYPES
BOUÉES STANDARDES
TYPE PLATE ET CONIQUE
FA-5005

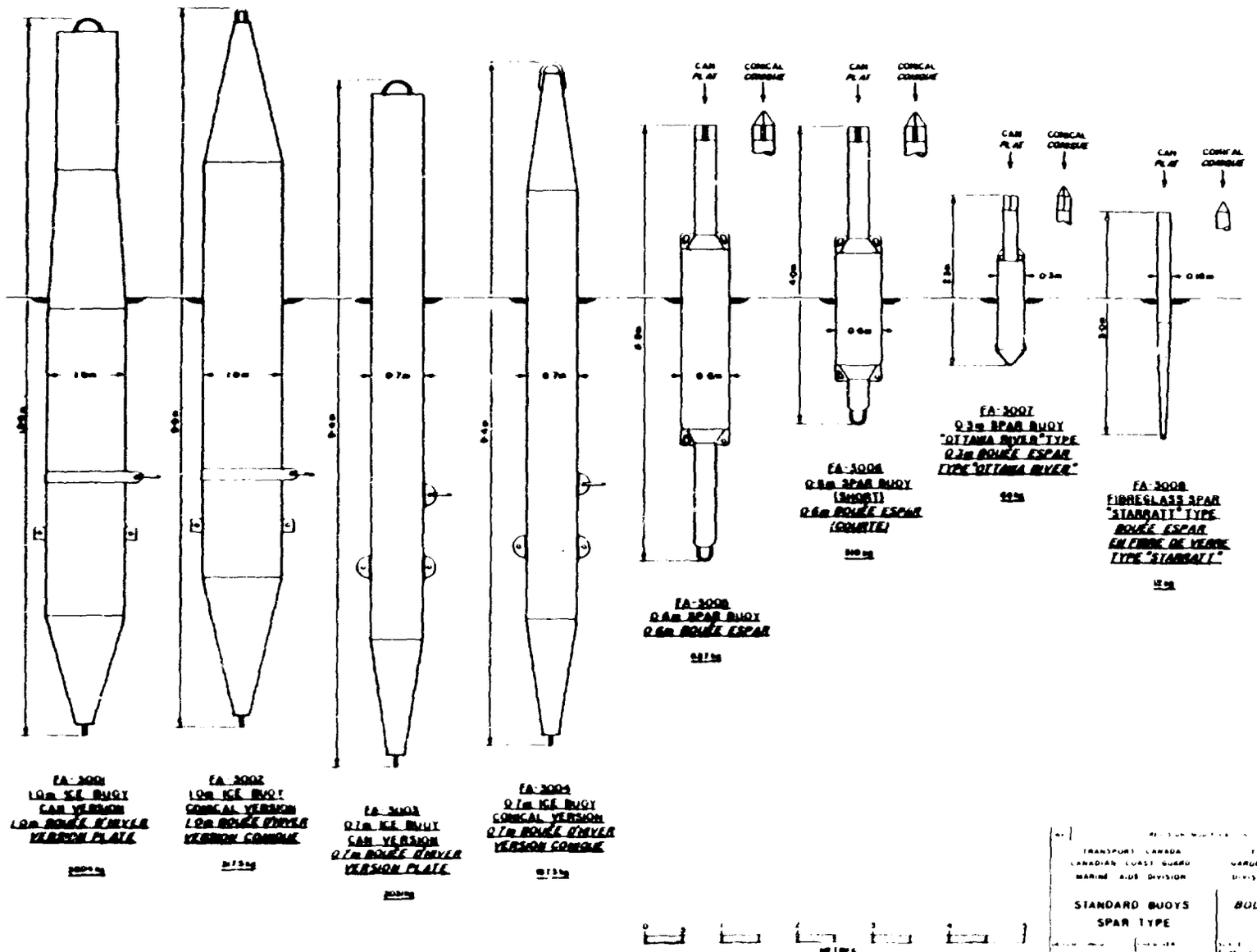
CAN PLAT
CONICAL CONIQUE
FA-3001
1.0m ICE BUOY
CAN VERSION
1.0m BOUÉE D'HIVER
VERSION PLATE
FA-3002
1.0m ICE BUOY
CONICAL VERSION
1.0m BOUÉE D'HIVER
VERSION CONIQUE
FA-3003
0.7m ICE BUOY
CAN VERSION
0.7m BOUÉE D'HIVER
VERSION PLATE
FA-3004
0.7m ICE BUOY
CONICAL VERSION
0.7m BOUÉE D'HIVER
VERSION CONIQUE
FA-3005
0.6m SPAR BUOY
0.6m BOUÉE ESPAR
FA-3006
0.6m SPAR BUOY
(SHORT)
0.6m BOUÉE ESPAR
(COURTE)
FA-3007
0.3m SPAR BUOY
"OTTAWA RIVER" TYPE
0.3m BOUÉE ESPAR
TYPE "OTTAWA RIVER"
FA-3008
FIBREGLASS SPAR
"STARRATT" TYPE
BOUÉE ESPAR
EN FIBRE DE VERRE
TYPE "STARRATT"
METRES
TRANSPORT CANADA
CANADIAN COAST GUARD
MARINE AIDS DIVISION
TRANSPORTS CANADA
GARDE CÔTIÈRE CANADIENNE
DIVISION DES AIDES MARITIMES
STANDARD BUOYS
SPAR TYPE
BOUÉES STANDARDES
TYPE ESPAR
FA-3004

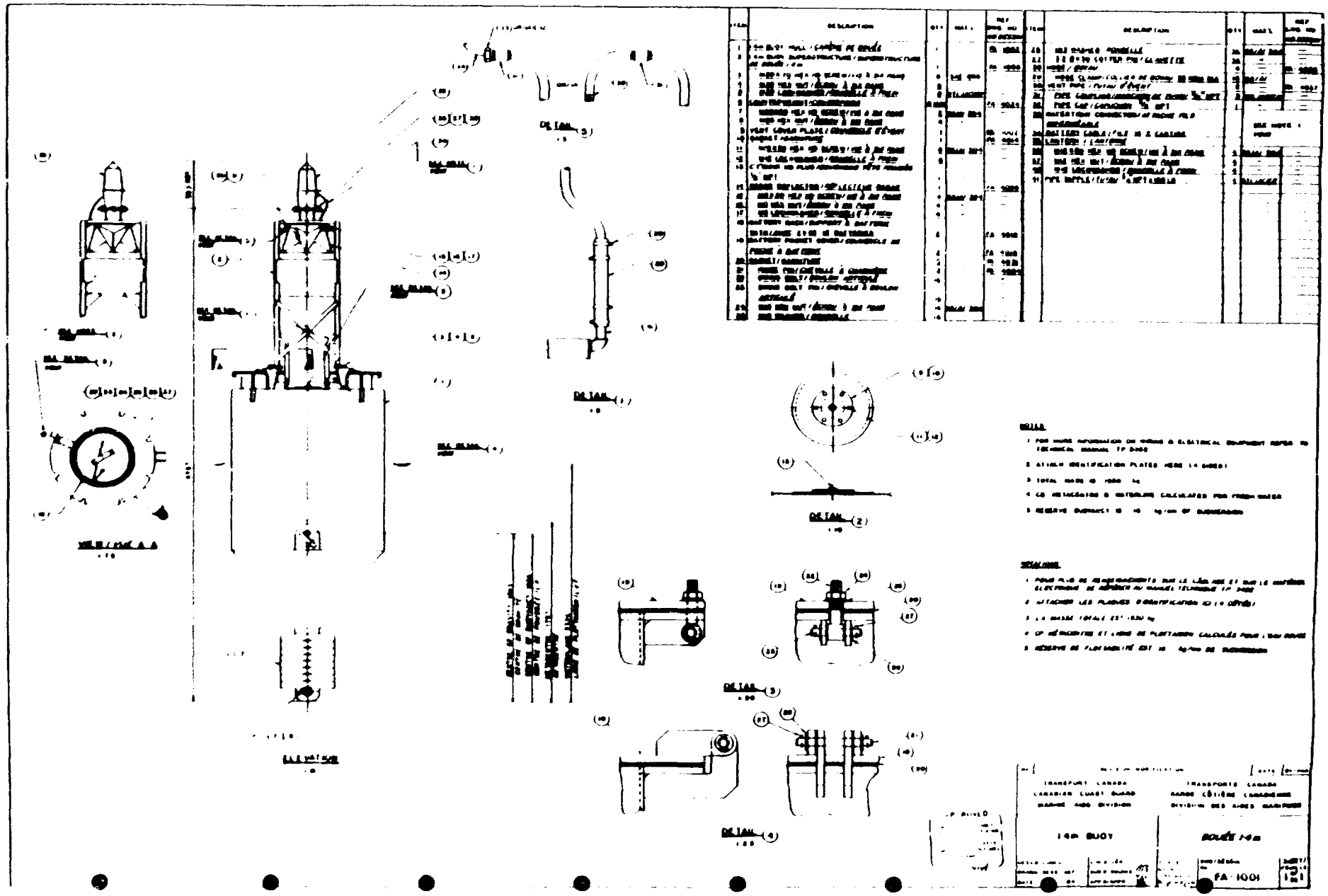
DETAIL
TRANSPORT CANADA
CANADIAN COAST GUARD
MARINE AIDS DIVISION
TRANSPORTS CANADA
GARDE CÔTIÈRE CANADIENNE
DIVISION DES AIDES MARITIMES
14m BUOY
BOUÉE 14m
FA-1001

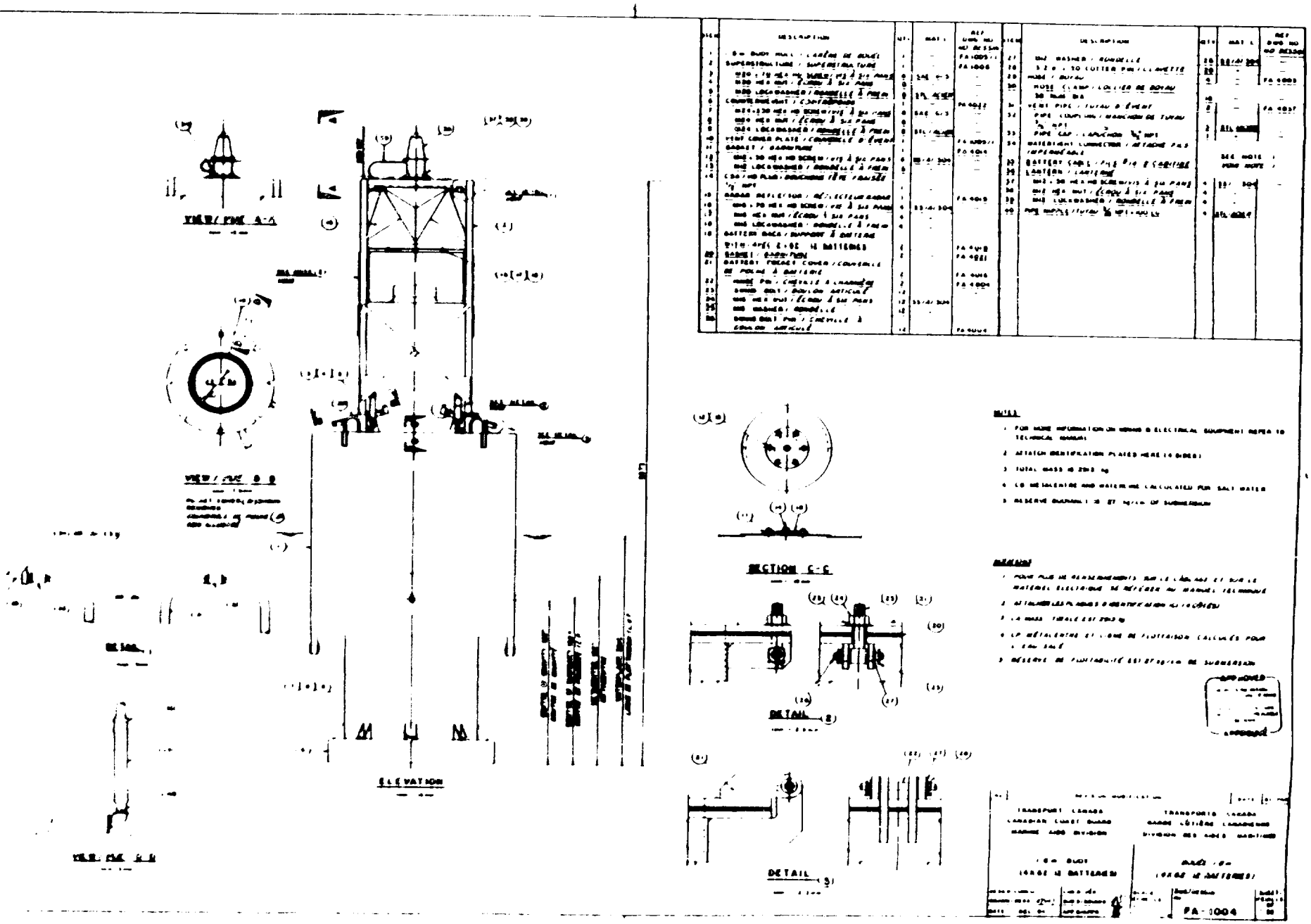
VIEW / VUE A-A
VIEW / VUE B-B
ELEVATION
SECTION C-C
DETAIL 2
DETAIL 3
NOTES
TRANSPORT CANADA
CANADIAN COAST GUARD
MARINE AIDS DIVISION
TRANSPORTS CANADA
GARDE CÔTIÈRE CANADIENNE
DIVISION DES AIDES MARITIMES
FA-1004

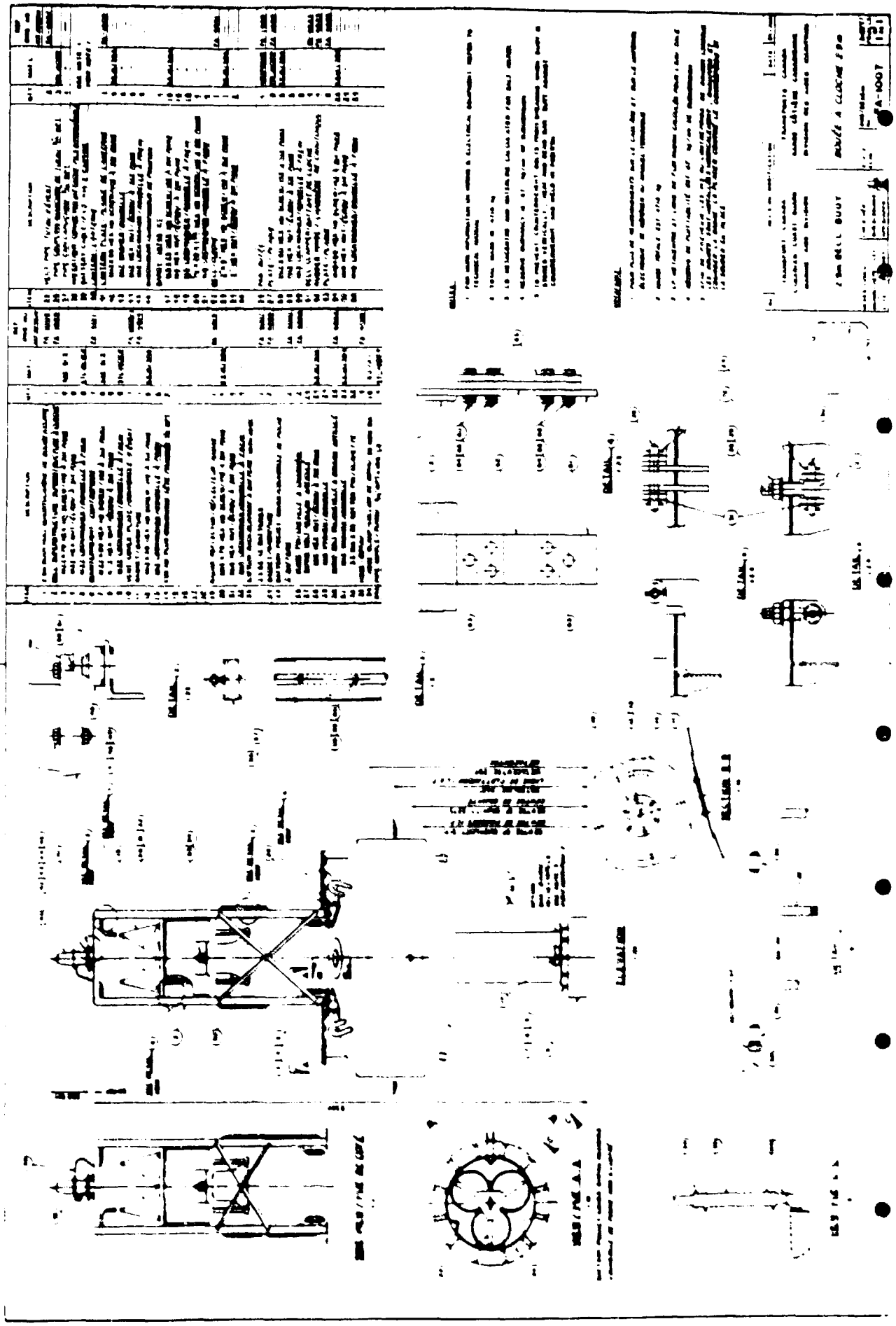

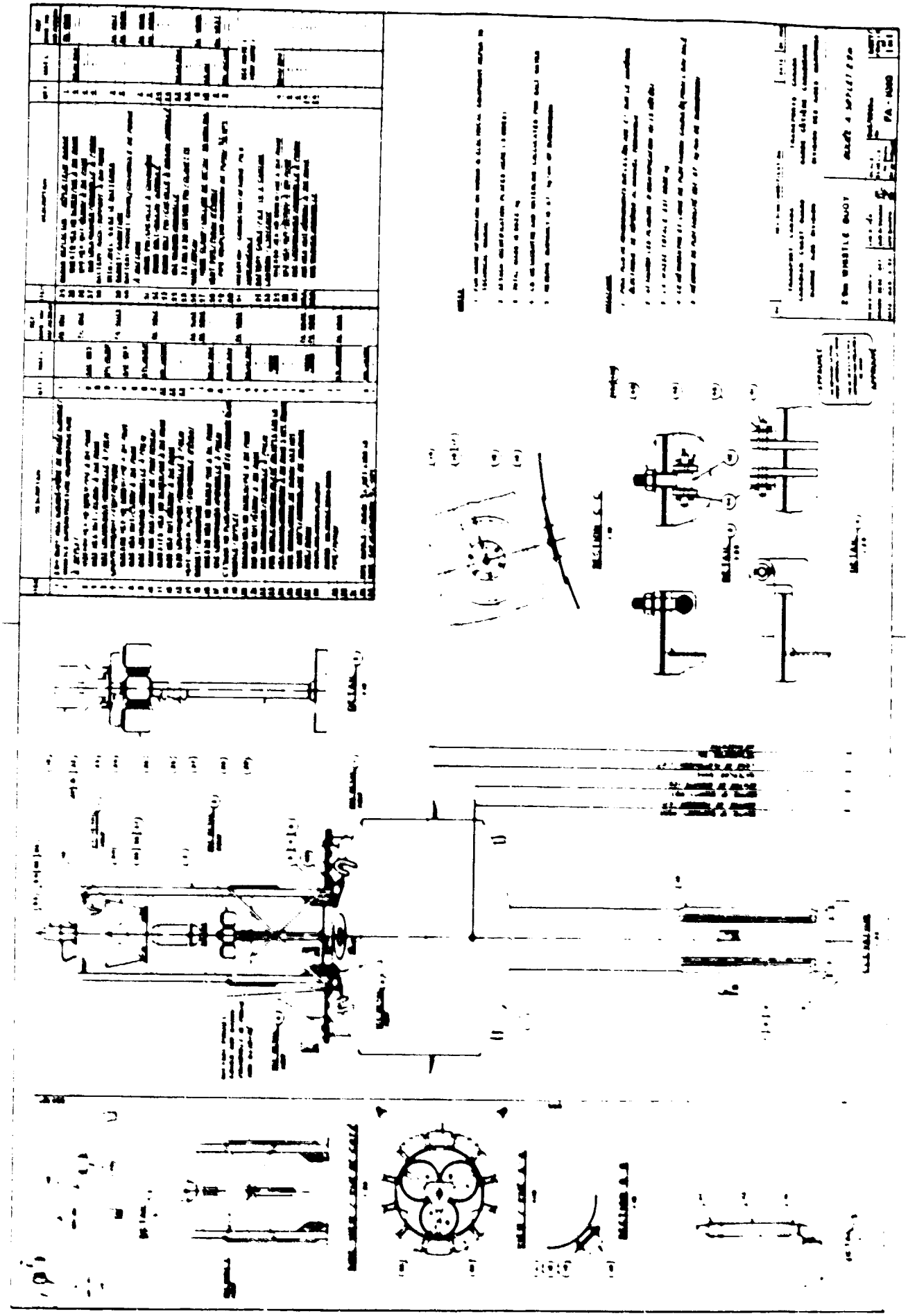

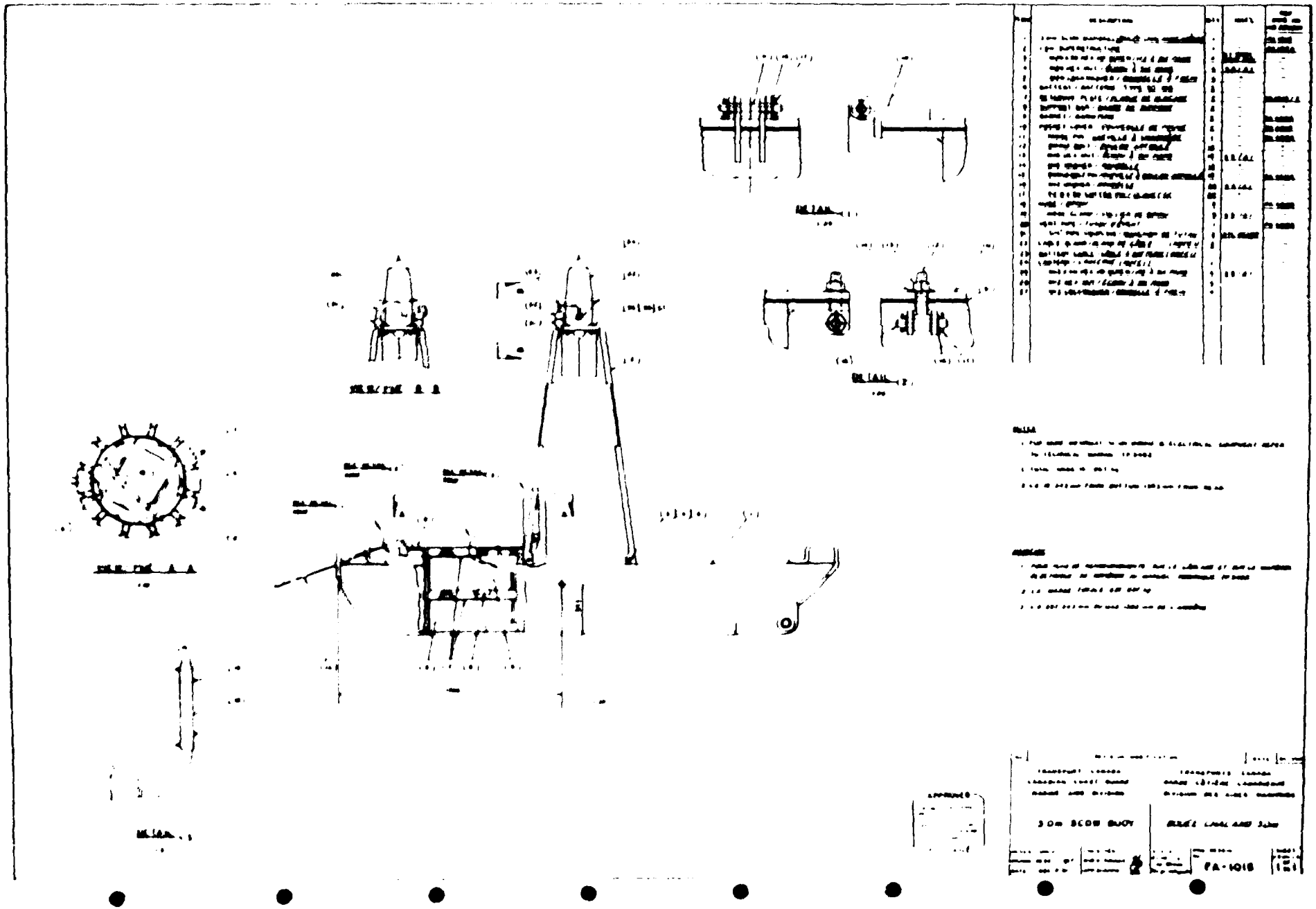
3.0m SCOW BUOY
FA-1015

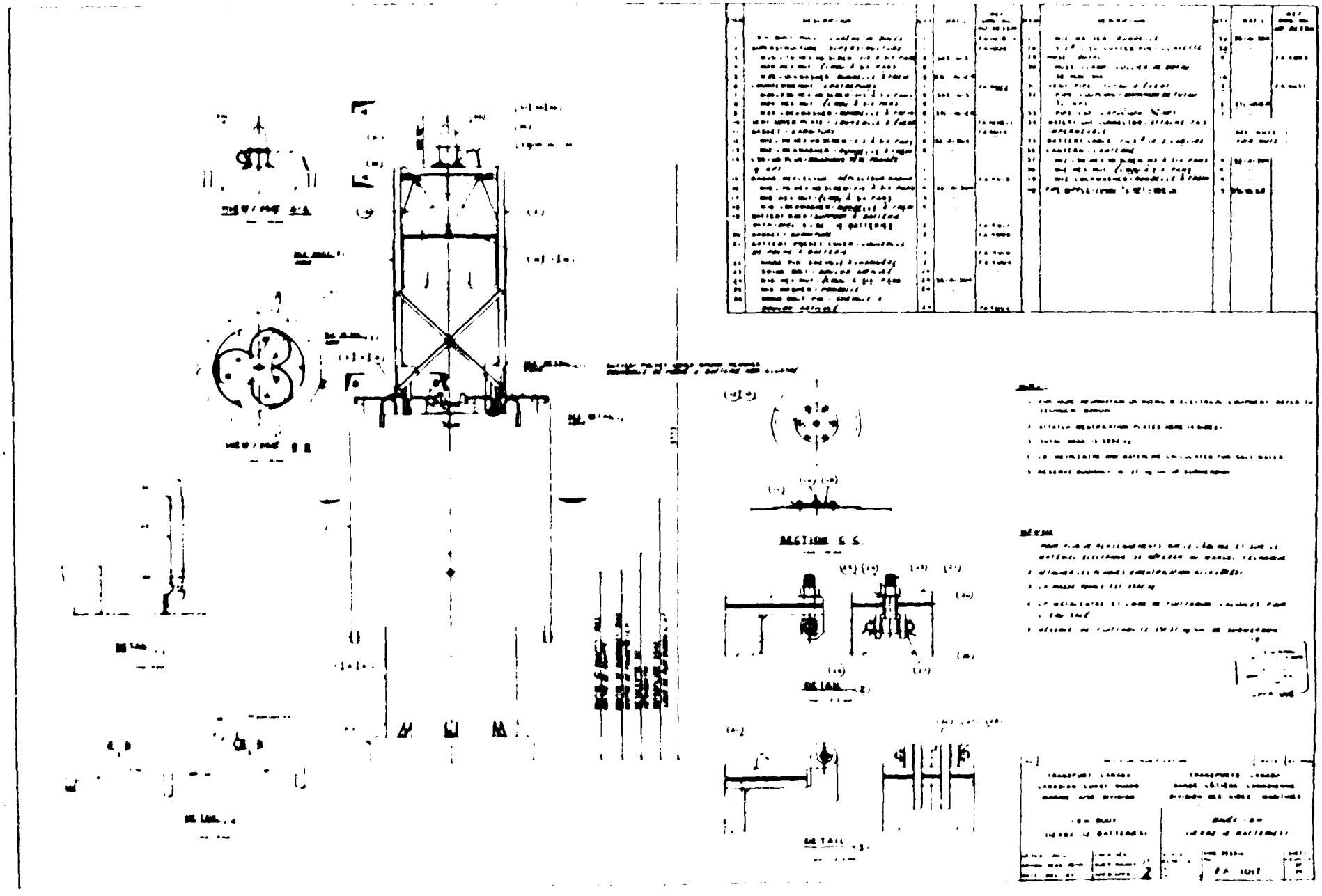
SECTION C-C
DETAIL 2
DETAIL 3

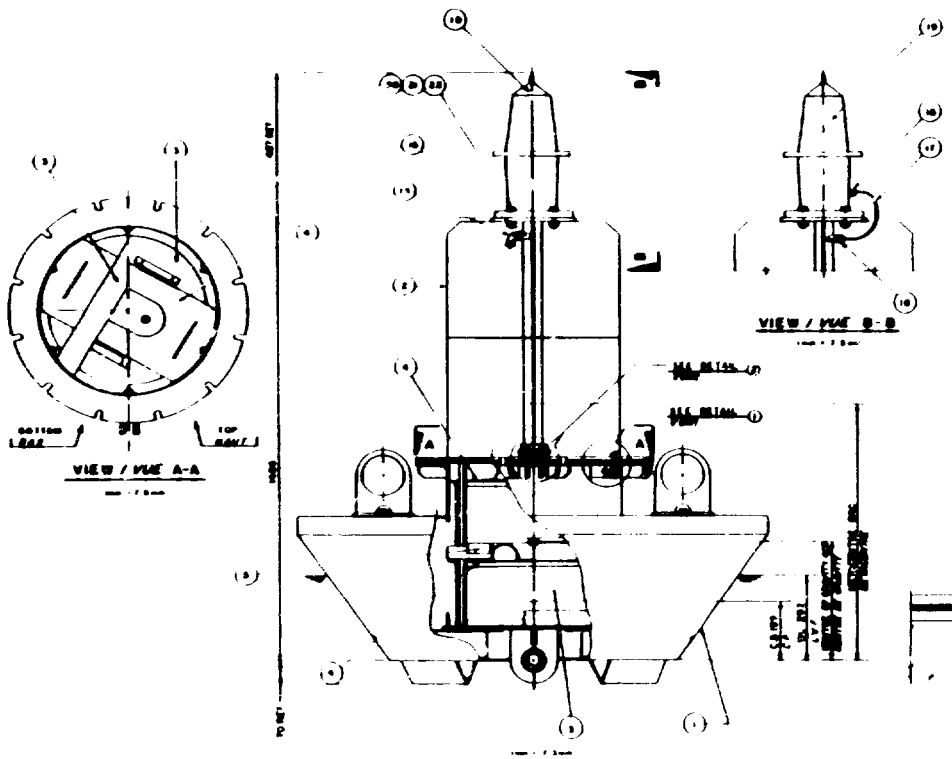

ITEM	DESCRIPTION	QTY	MATL	REF DWG NO
1	1.5m DISCUS BUOY MOULÉ DISCUS / BOUÉE DISCUS	1	-	FA 1000
2	SUPERSTRUCTURE	1	-	FA 1001
3	BATTERY / BATTERIE TYPE 6D-12	2	-	-
4	RETAINING PLATE / PLAQUE DE BIOLAGE	2	-	FA 1020
5	SUPPORT BAR / BARRE DE SUPPORT	2	-	-
6	BASKET / GARNITURE	1	-	FA 1000
7	HINGE PIN / CHEVILLE À CHARNIÈRE	1	STAINLESS STEEL	FA 1000
8	SHACKLE BOLT / BOULON À ARTICULE	12	-	-
9	M36 HEX NUT / ÉCROU À SIX PANS	12	-	-
10	M36 WASHER / RONDELLE	12	-	-
11	SHACKLE BOLT PROLONGER / BOULON ARTICULÉ À RALLONGE	12	-	-
12	M12 WASHER / RONDELLE	20	-	-
13	3.2 B - 50 LOCTITE PIN / CLAVETTE	20	-	-
14	90° ELBOW / COUDE 90°	1	-	-
15	NIPPLE / RACCORD 1/2 NPT - 38 mm LG	1	-	-
16	WATERTIGHT CONNECTOR / ATTACHE PAS IMPERMÉABLE		SEE NOTE 1 VOIR NOTA 1	
17	BATTERY CABLE / FILS 4/0 - 2 CABLE			
18	CABLE GLAND / GLAND DE CÂBLE			
19	LANTERN / LANTERNE			
20	M12 - 30 HEX HD SCREW / VIS À SIX PANS	4	STAINLESS STEEL	-
21	M12 HEX NUT / ÉCROU À SIX PANS	4	-	-
22	M12 LOCKWASHER / RONDELLE À FREIN	4	-	-

NOTES

1. FOR MORE INFORMATION ON WIRING & ELECTRICAL EQUIPMENT REFER TO TECHNICAL MANUAL TP 5402
2. TOTAL MASS IS 210 kg

NOTES

1. POUR PLUS DE RENSEIGNEMENTS SUR LE CÂBLAGE ET SUR LE MATÉRIEL ÉLECTRIQUE SE RÉFÉRER AU MANUEL TECHNIQUE TP 5402
2. LA MASSE TOTALE EST 210 kg

APPROVED

REVISION/MODIFICATION	DATE	BY

TRANSPORT CANADA
CANADIAN COAST GUARD
MARINE AIDS DIVISION

TRANSPORTS CANADA
GARDE CÔTIÈRE CANADIENNE
DIVISION DES AIDES MARITIMES

1.5 m DISCUS BUOY

BOUÉE DISCUS / 1.5 m

FA - 1010

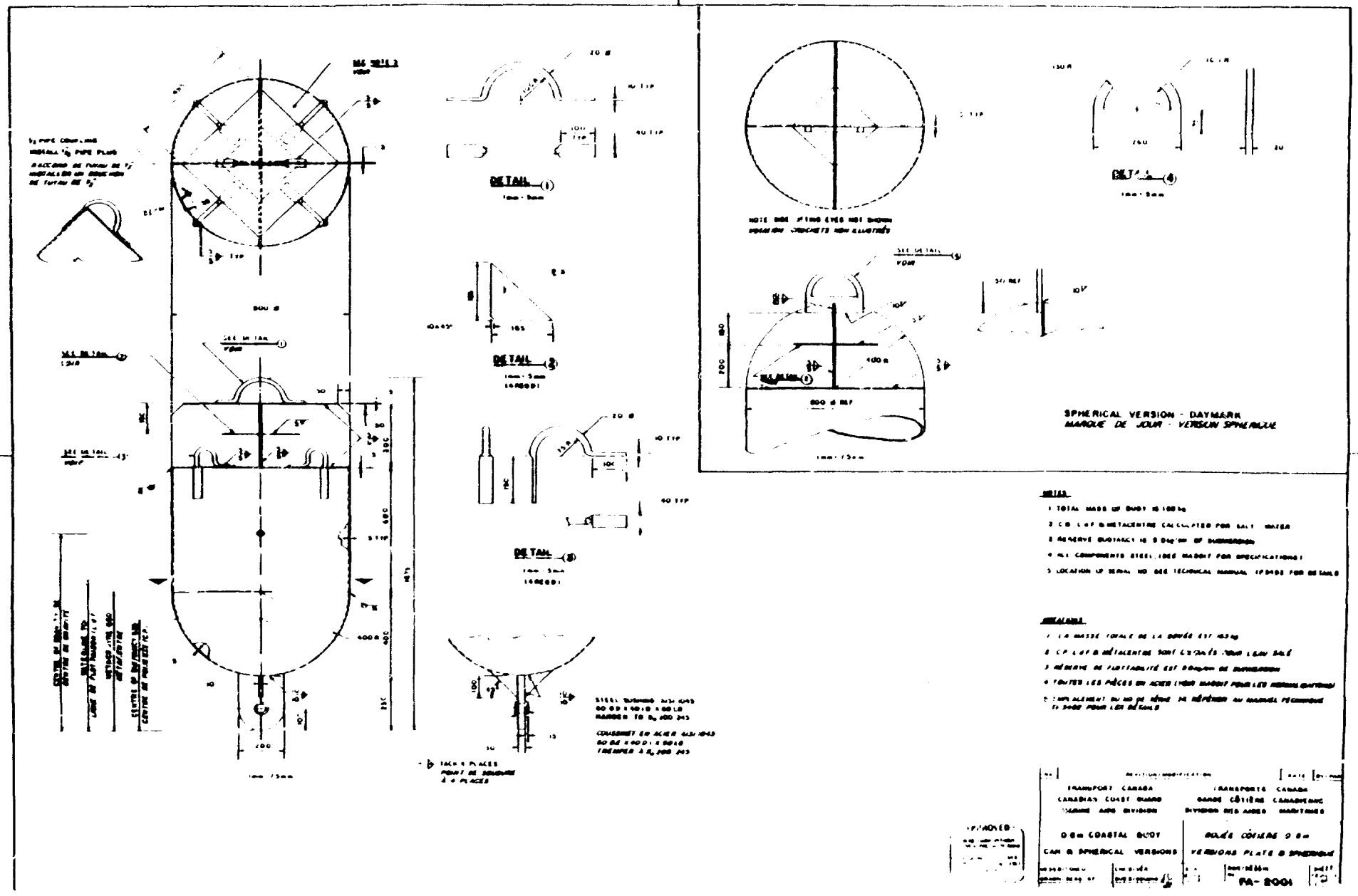
DETAIL
SPHERICAL VERSION - DAYMARK
MARQUE DE JOUR - VERSION SPHERIQUE
TRANSPORT CANADA
CANADIAN COAST GUARD
TRANSPORTS CANADA
GARDE CÔTIÈRE CANADIENNE
0.9m COASTAL BUOY
CAN & SPHERICAL VERSIONS
BOUÉE CÔTIÈRE 0.9m
VERSIONS PLATE & SPHÉRIQUE
PA-2001

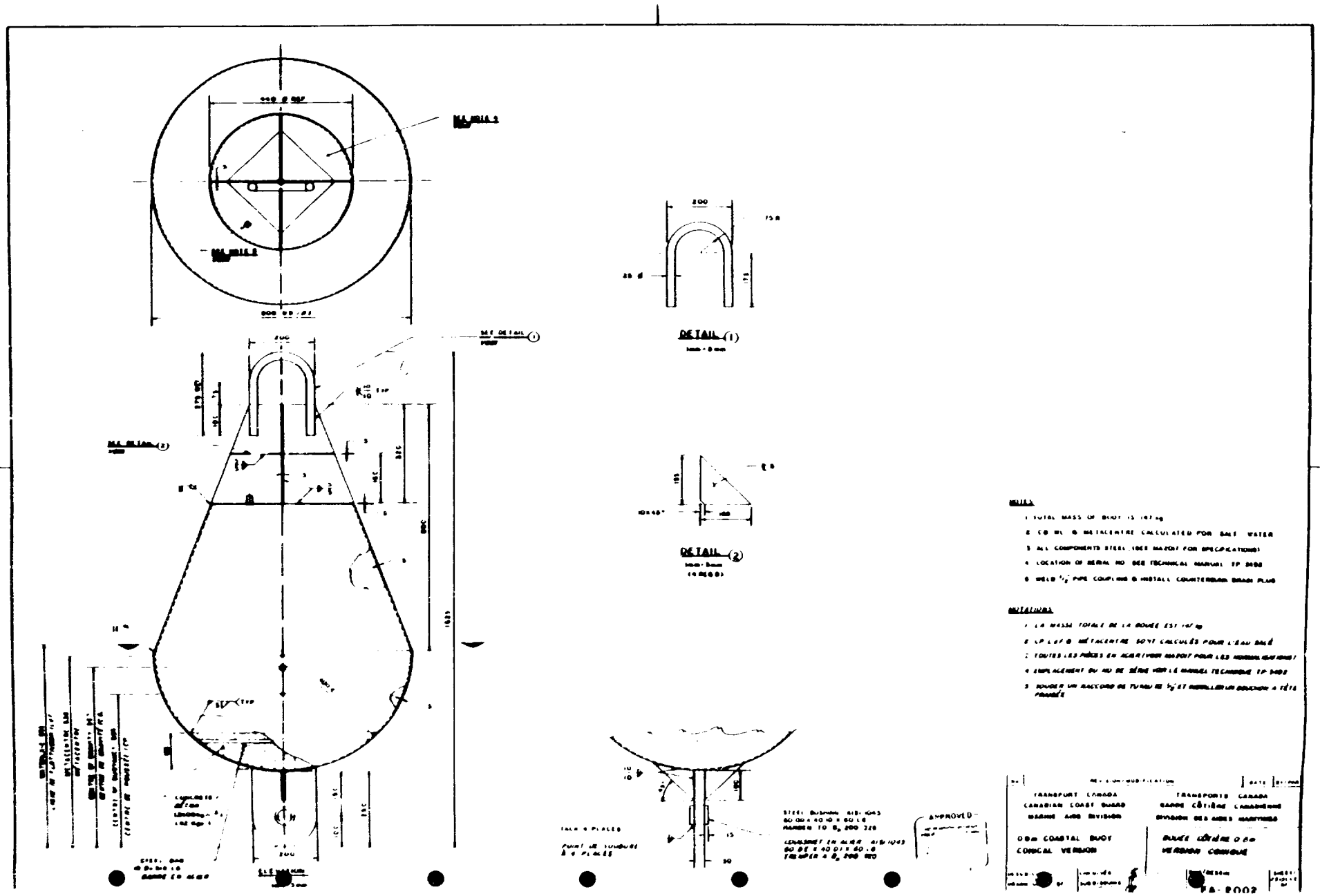
DETAIL (1)
DETAIL (2)
NOTES
1 TOTAL MASS OF BUOY IS
2 CG WL & METACENTRE CALCULATED FOR SALT WATER
3 ALL COMPONENTS STEEL (SEE MAXPOT FOR SPECIFICATIONS)
4 LOCATION OF SERIAL NO SEE TECHNICAL MANUAL TP
6 WELD PIPE COUPLING & INSTALL COUNTERBORE DRAIN PLUG
NOTES
1 LA MASSE TOTALE DE LA BOUÉE EST
2 LE LCF & MÉTACENTRE SONT CALCULÉS POUR L'EAU SALÉ
3 TOUTES LES PIÈCES EN ACIER (VOIR MAXPOT POUR LES
4 EMPLACEMENT DU NO DE SÉRIE VOIR LE MANUEL TECHNIQUE TP
5 SOUDER UN RACCORD DE TUYAU DE
TRANSPORT CANADA
CANADIAN COAST GUARD
MARINE AIDS DIVISION
TRANSPORTS CANADA
GARDE CÔTIÈRE CANADIENNE
DIVISION DES AIDES MARITIMES
0.8m COASTAL BUOY
CONICAL VERSION
BOUÉE CÔTIÈRE 0.8m
VERSION CONIQUE
APPROVED
TA-8002

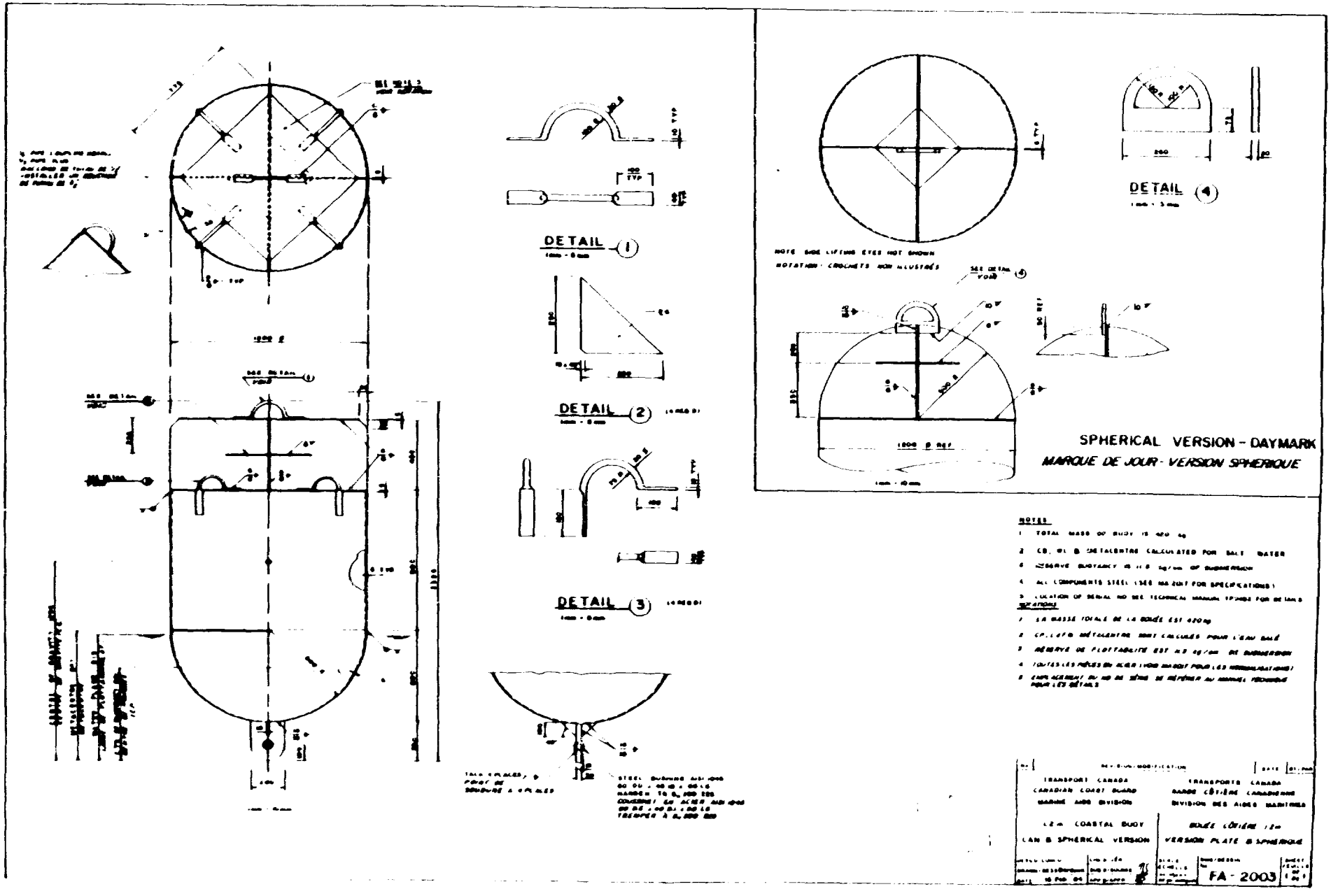
DETAIL 1
DETAIL 2
DETAIL 3
DETAIL 4
SPHERICAL VERSION - DAYMARK
MARQUE DE JOUR - VERSION SPHERIQUE
NOTES
TRANSPORT CANADA
CANADIAN COAST GUARD
MARINE AIDS DIVISION
TRANSPORTS CANADA
GARDE CÔTIÈRE CANADIENNE
DIVISION DES AIDES MARITIMES
COASTAL BUOY
VERSION PLATE & SPHERIQUE
FA - 2003

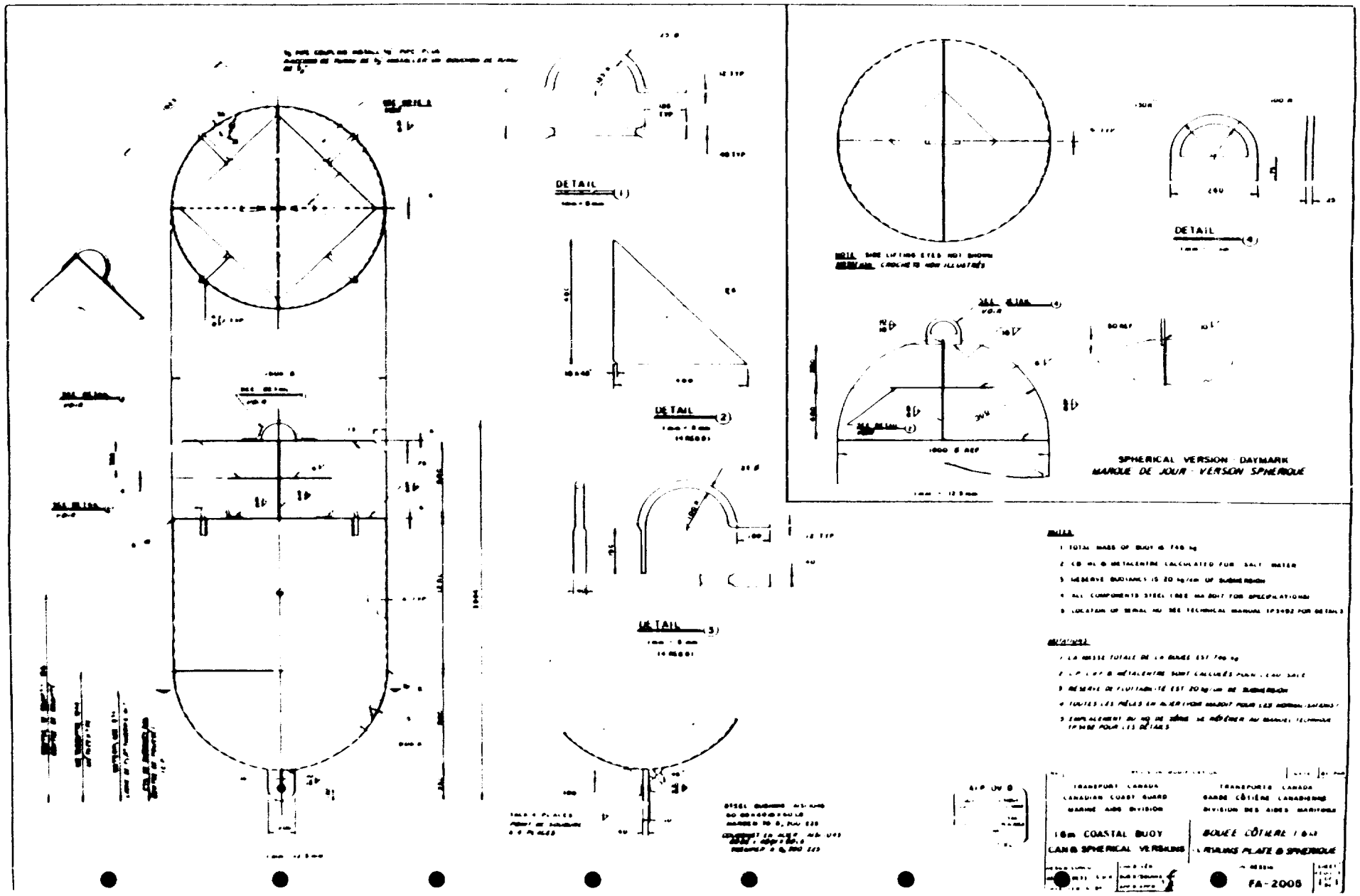
DETAIL (1)
DETAIL (2)
DETAIL (3)
DETAIL (4)
SPHERICAL VERSION - DAYMARK
MARQUE DE JOUR - VERSION SPHÉRIQUE
TRANSPORT CANADA
CANADIAN COAST GUARD
MARINE AIDS DIVISION
TRANSPORTS CANADA
GARDE CÔTIÈRE CANADIENNE
DIVISION DES AIDES MARITIMES
16m COASTAL BUOY
CAN & SPHERICAL VERSIONS
BOUÉE CÔTIÈRE 16m
VERSIONS PLATE & SPHÉRIQUE
FA-2005

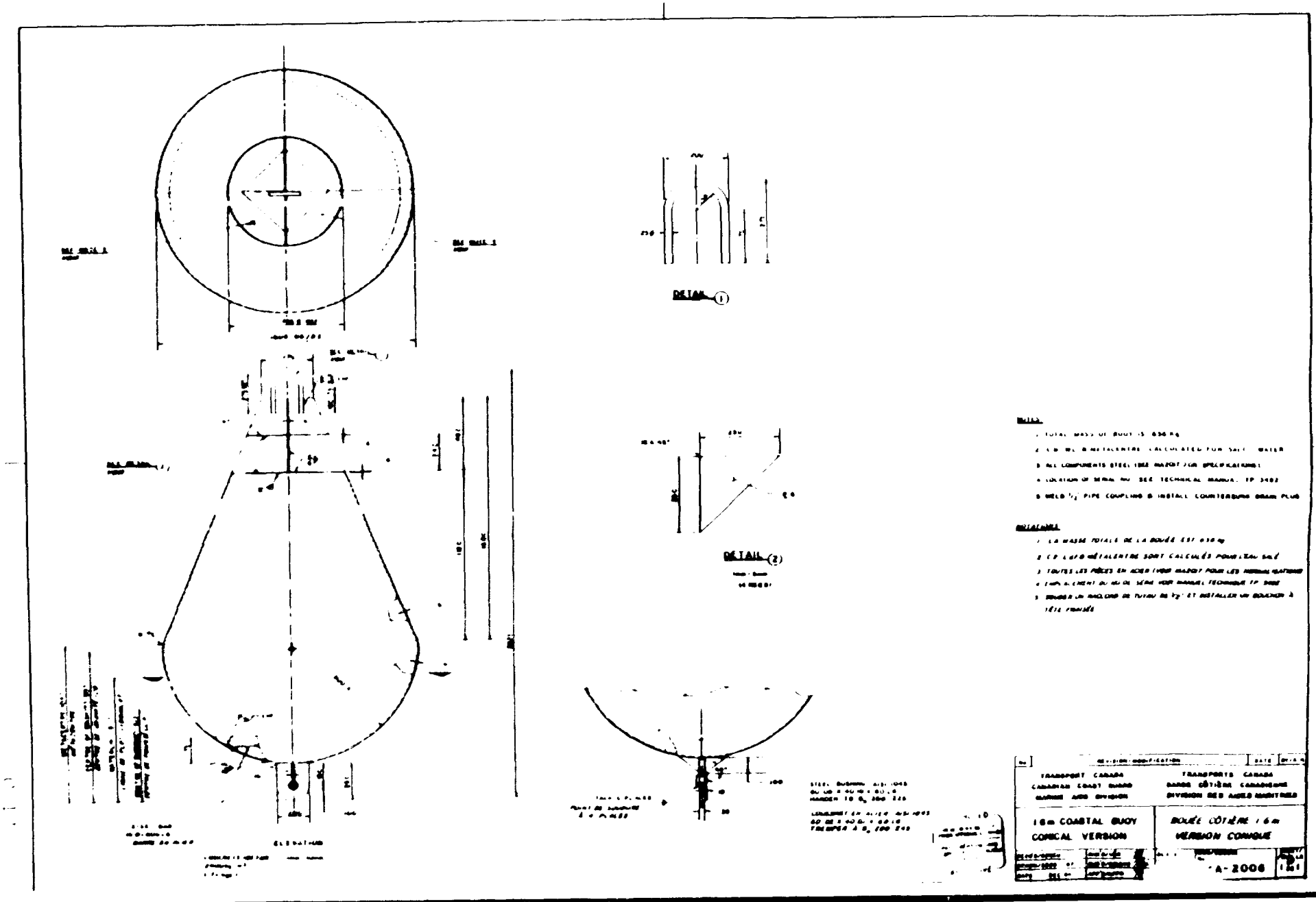
DETAIL (1)
DETAIL (2)
NOTES:
1. TOTAL MASS OF BUOY IS 636 kg
2. C.G. WL & METACENTRE CALCULATED FOR SALT WATER
3. ALL COMPONENTS STEEL UNLESS NOTED FOR SPECIFICATIONS
4. LOCATION OF SERIAL NO. SEE TECHNICAL MANUAL TP 3482
5. WELD 1/2 PIPE COUPLING & INSTALL COUNTERSUNK DRAIN PLUG
NOTA:
1. LA MASSE TOTALE DE LA BOUÉE EST 636 kg
2. CF LCFB MÉTACENTRE SONT CALCULÉS POUR L'EAU SALÉ
3. TOUTES LES PIÈCES EN ACIER SONT NOTÉES POUR LES SPÉCIFICATIONS
4. L'EMPLACEMENT DU NO. DE SÉRIE VOIR MANUEL TECHNIQUE TP 3482
5. SOUDER UN RACCORD DE TUYAU DE 1/2" ET INSTALLER UN BOUCHON À TÊTE FRAISÉE
TRANSPORT CANADA
CANADIAN COAST GUARD
MARINE AIDS DIVISION
TRANSPORTS CANADA
GARDE CÔTIÈRE CANADIENNE
DIVISION DES AIDES MARITIMES
16m COASTAL BUOY
CONICAL VERSION
BOUÉE CÔTIÈRE 16 m
VERSION CONIQUE
A-2006

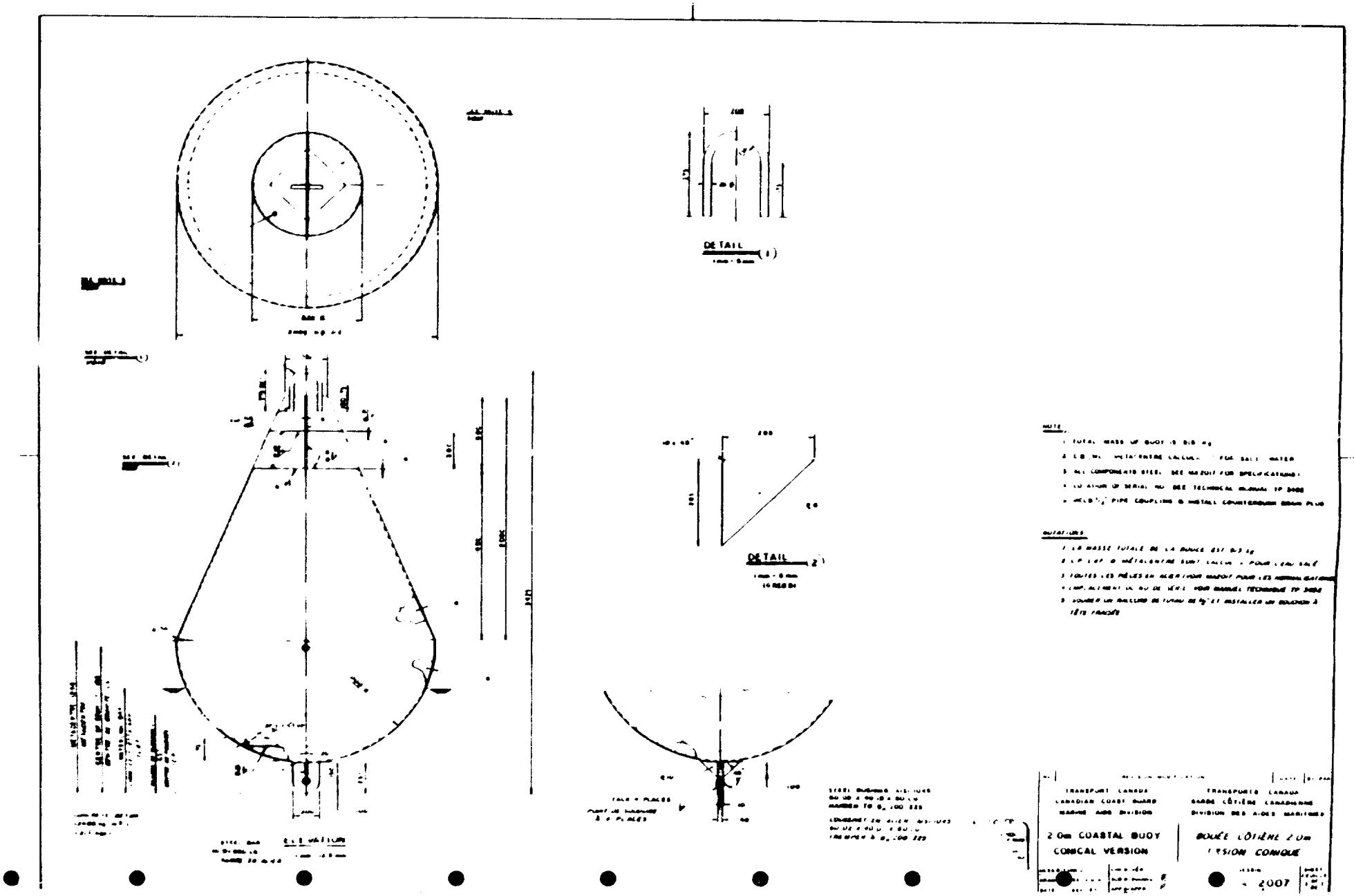
DETAIL
DETAIL
TRANSPORT CANADA
CANADIAN COAST GUARD
MARINE AIDS DIVISION
TRANSPORTS CANADA
GARDE CÔTIÈRE CANADIENNE
DIVISION DES AIDES MARITIMES
2 0m COASTAL BUOY
CONICAL VERSION
BOUÉE CÔTIÈRE 2 0m
VERSION CONIQUE
2007

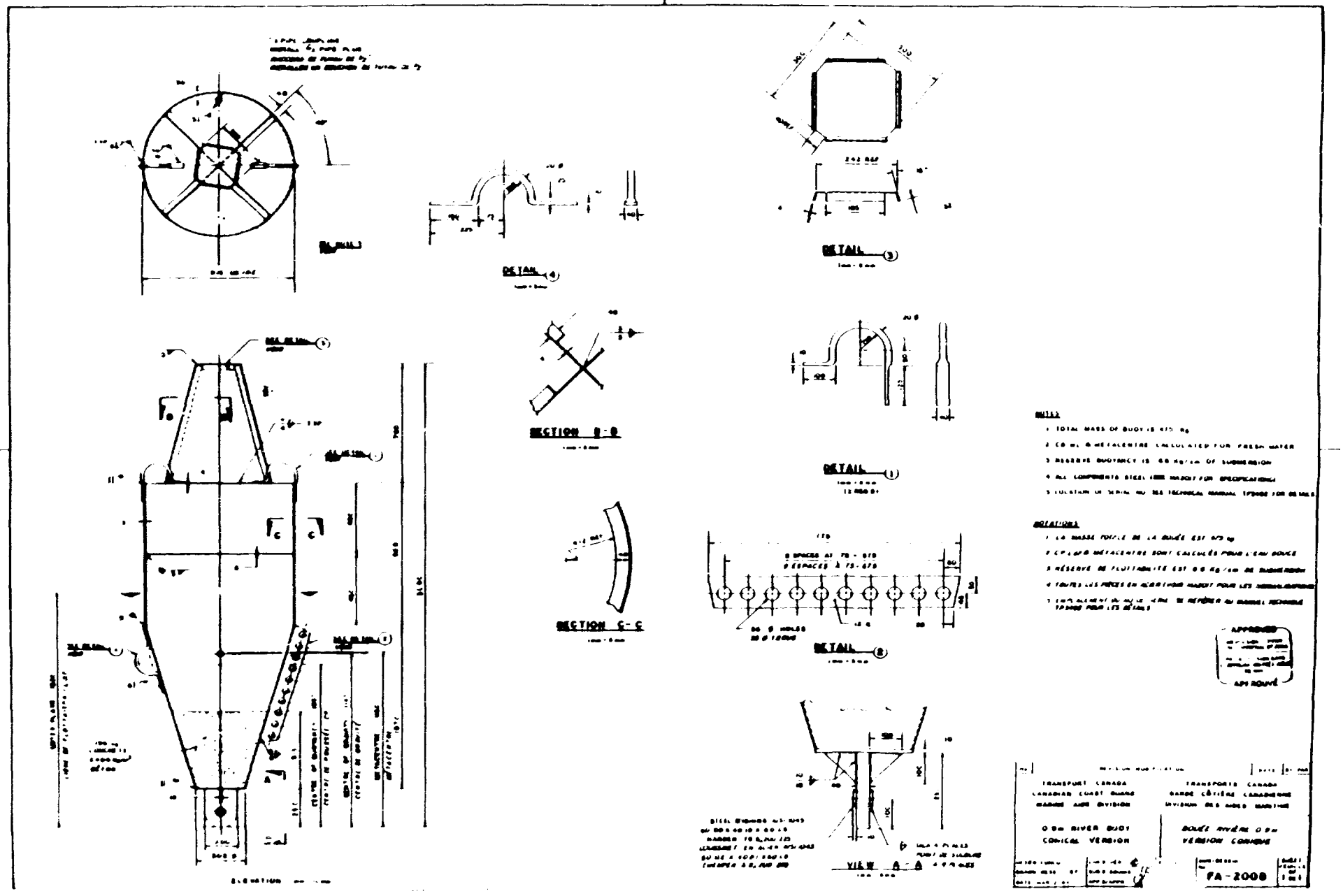
DETAIL 4
DETAIL 3
SECTION B-B
DETAIL 1
SECTION C-C
DETAIL 2
VIEW A-A
ELEVATION
NOTES
1 TOTAL MASS OF BUOY IS 475 kg
2 CG AND METACENTRE CALCULATED FOR FRESH WATER
3 RESERVE BUOYANCY IS 0.6 kg/cm OF SUBMERSION
4 ALL COMPONENTS STEEL UNLESS MARKED FOR SPECIFICATIONS
5 FOLLOW UP SERIAL NO. SEE TECHNICAL MANUAL TP9000 FOR DETAILS
NOTES
1 LA MASSE TOTALE DE LA BOUÉE EST 475 kg
2 CG ET METACENTRE SONT CALCULÉS POUR L'EAU DOUCE
3 RÉSERVE DE FLOTTABILITÉ EST 0.6 kg/cm DE SUBMERSION
4 TOUTES LES PIÈCES EN ACIER SONT MARQUÉ POUR LES SPÉCIFICATIONS
5 SUIVRE SUIVANT LE NO. DE SÉRIE AU MANUEL TECHNIQUE TP9000 POUR LES DÉTAILS
APPROVED
APPROUVÉ
TRANSPORT CANADA
CANADIAN COAST GUARD
MARINE AIDS DIVISION
TRANSPORTS CANADA
GARDE CÔTIÈRE CANADIENNE
DIVISION DES AIDES MARITIMES
0.9m RIVER BUOY
CONICAL VERSION
BOUÉE RIVÈRE 0.9m
VERSION CONIQUE
FA-2008

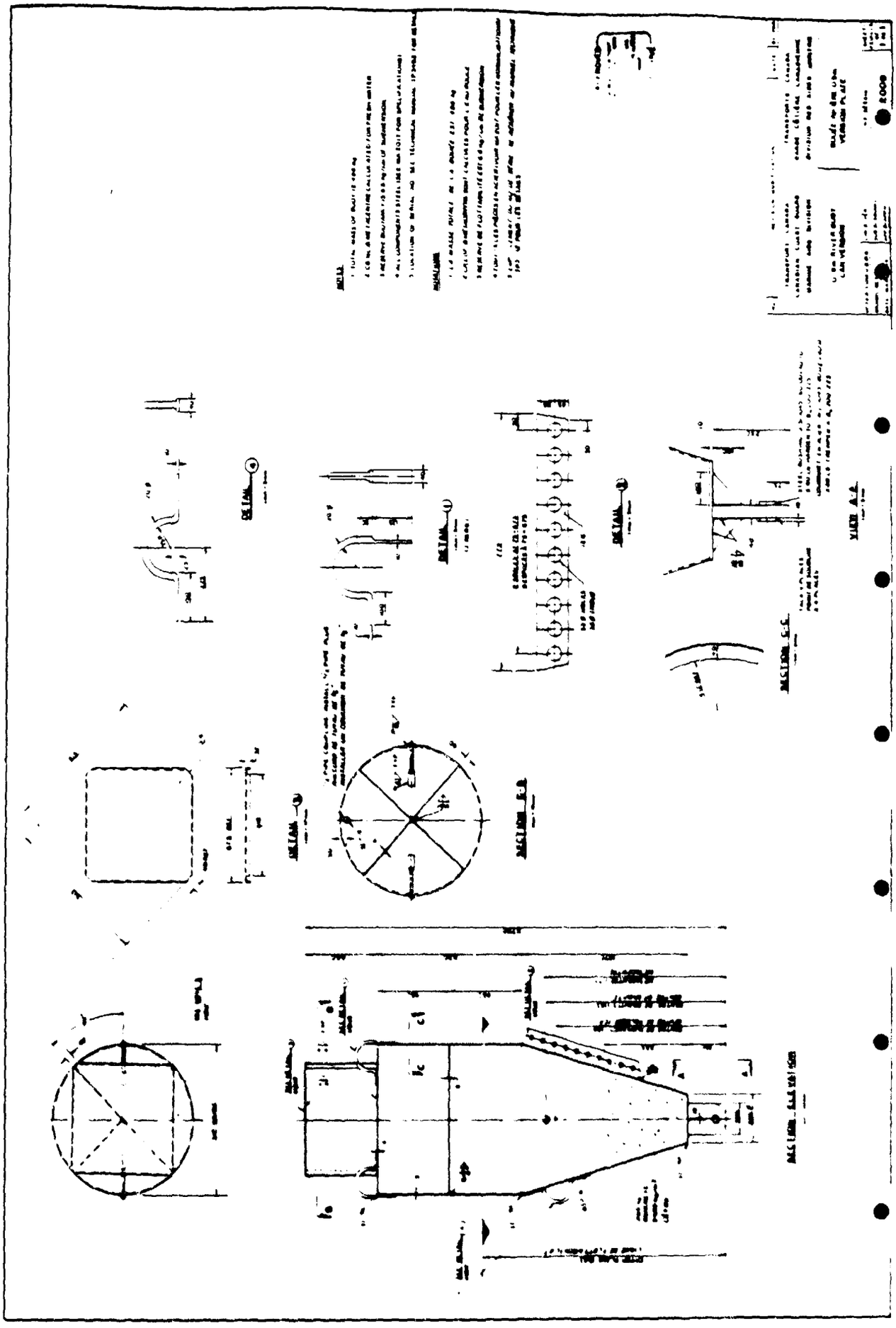

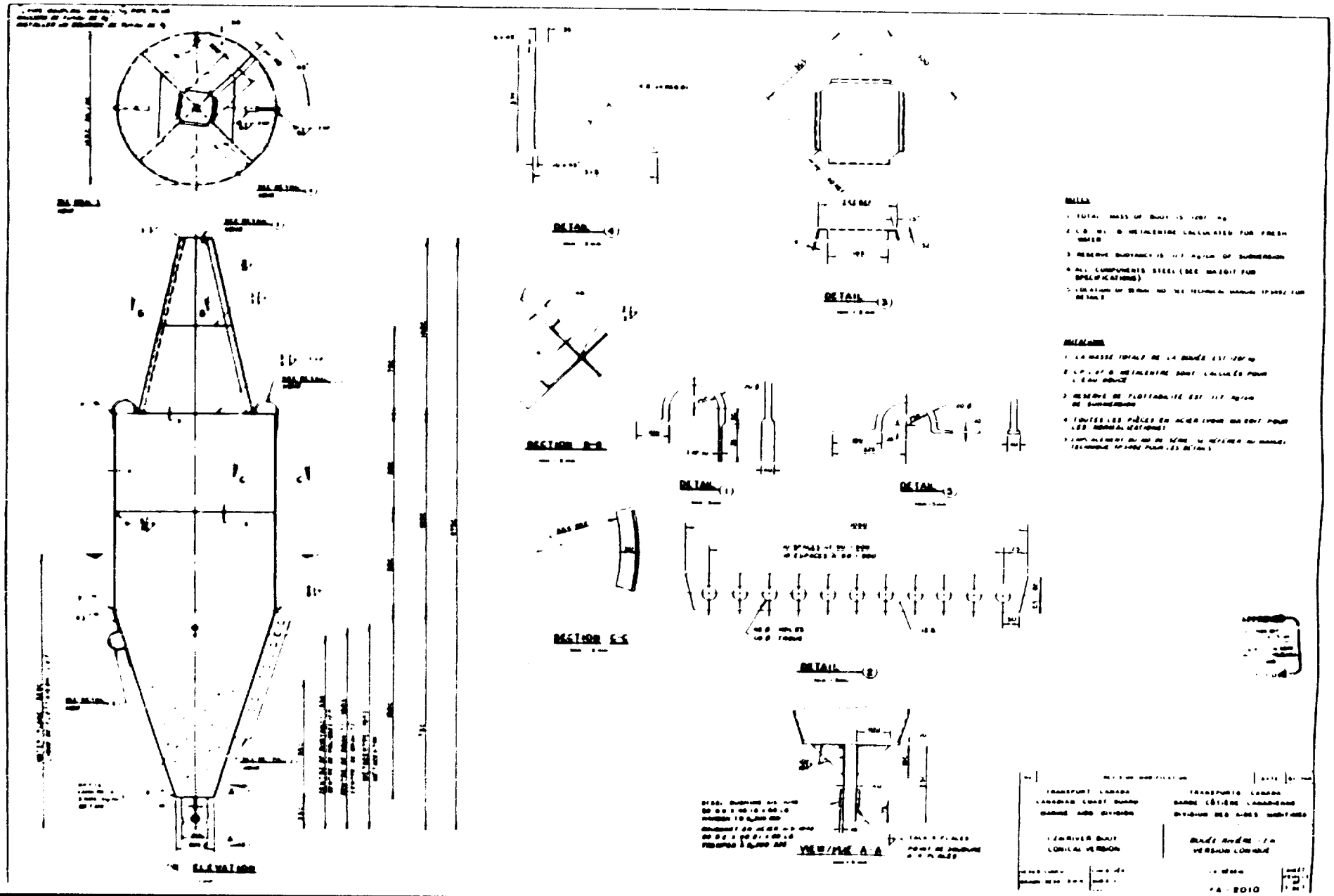
ELEVATION
DETAIL (4)
DETAIL (3)
SECTION B-B
DETAIL (1)
DETAIL (5)
SECTION C-C
DETAIL (2)
VIEW/VUE A-A
NOTES
TRANSPORT CANADA
CANADIAN COAST GUARD
TRANSPORTS CANADA
GARDE CÔTIÈRE CANADIENNE
FA - 2010

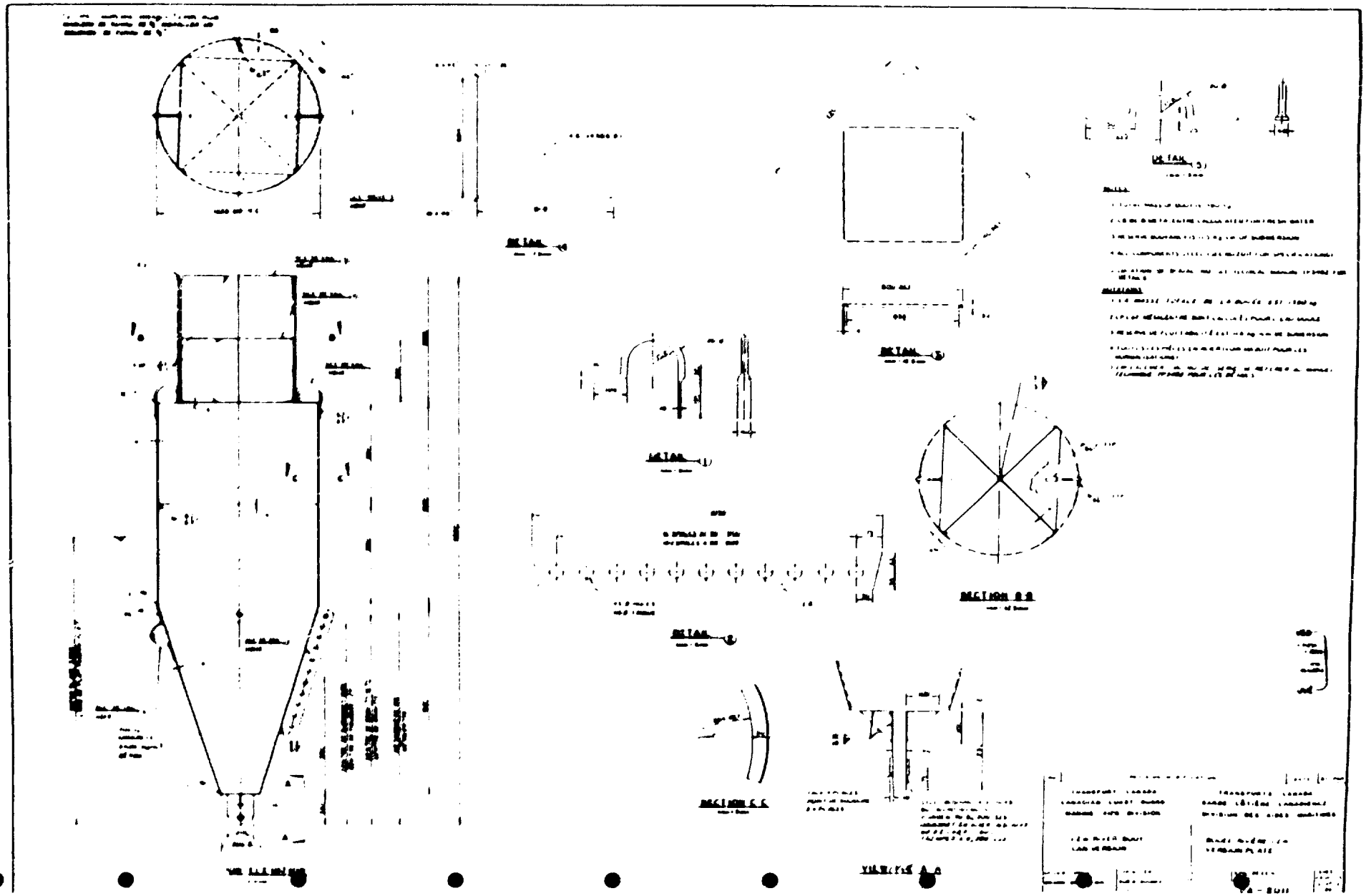
DETAIL
DETAIL
DETAIL
DETAIL
DETAIL
DETAIL
SECTION B-B
SECTION C-C
VIEW FOR A-A

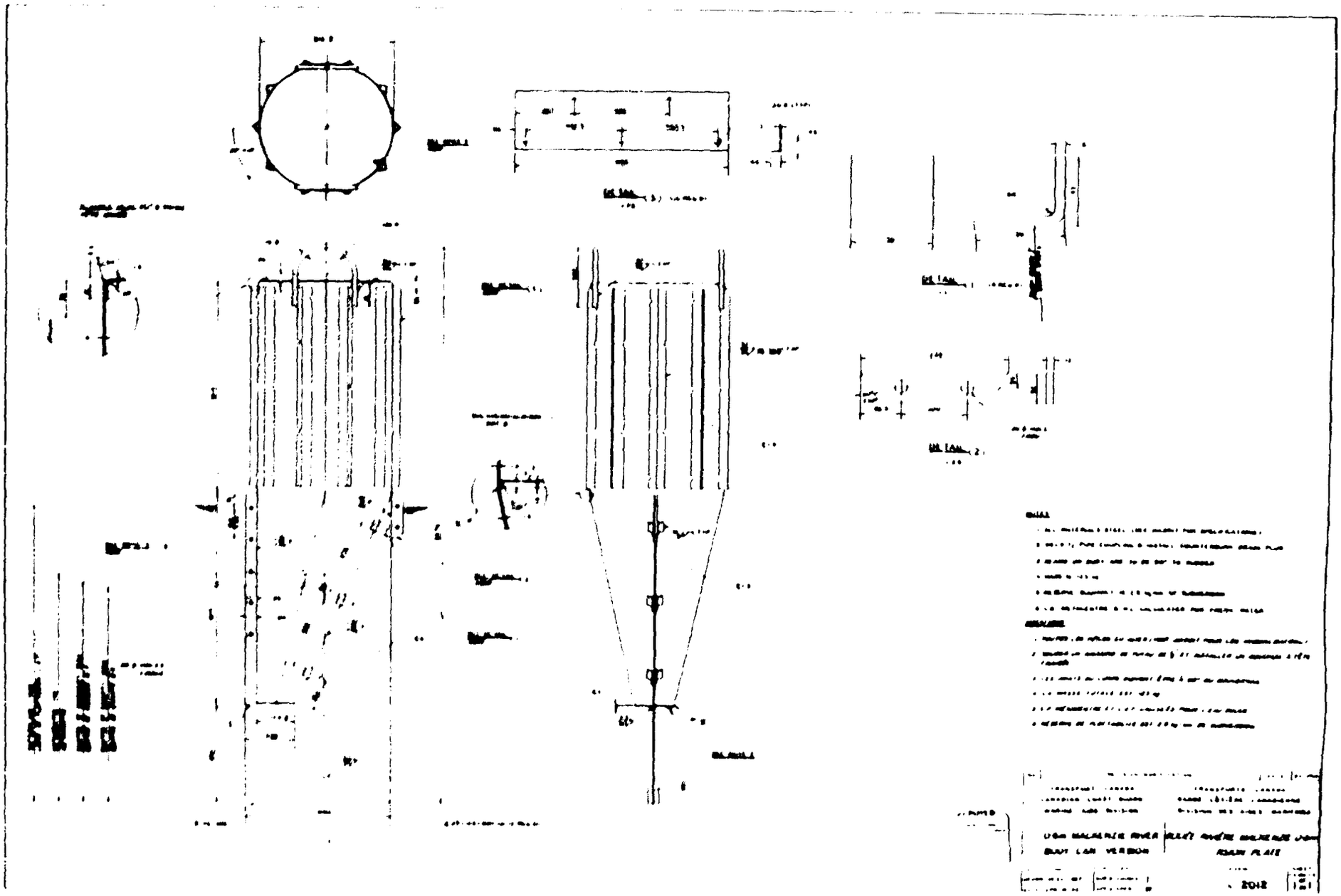

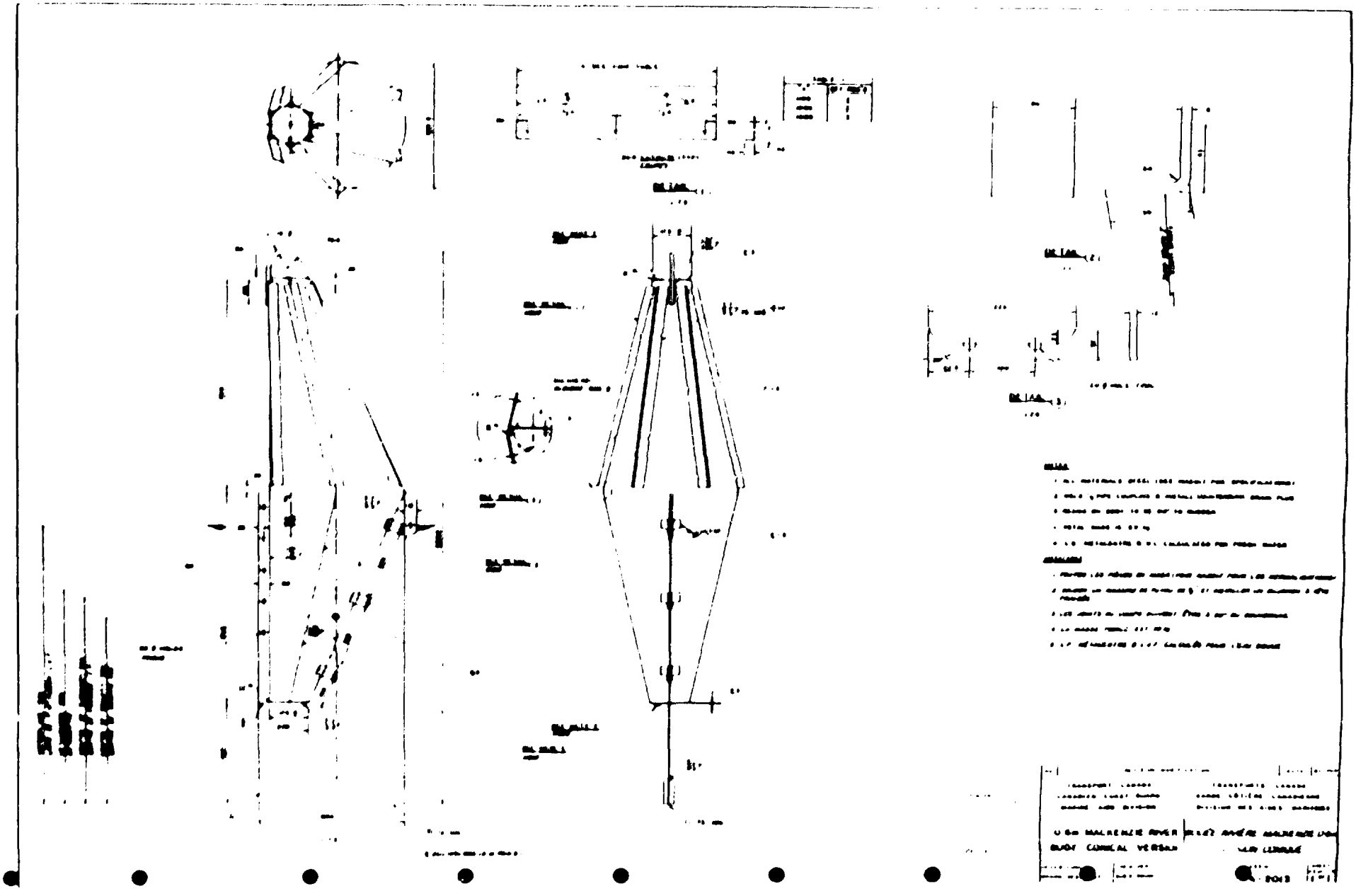

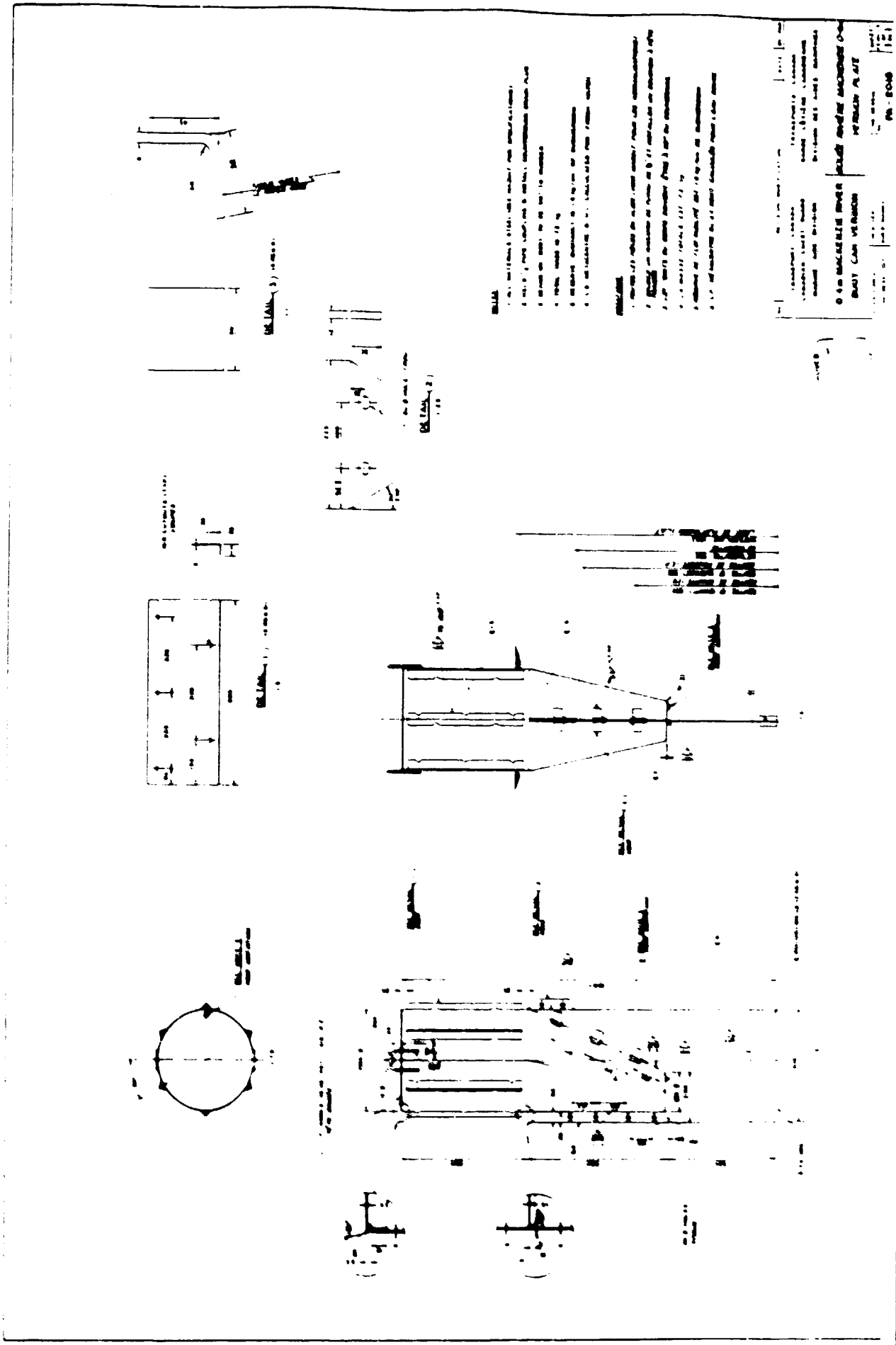

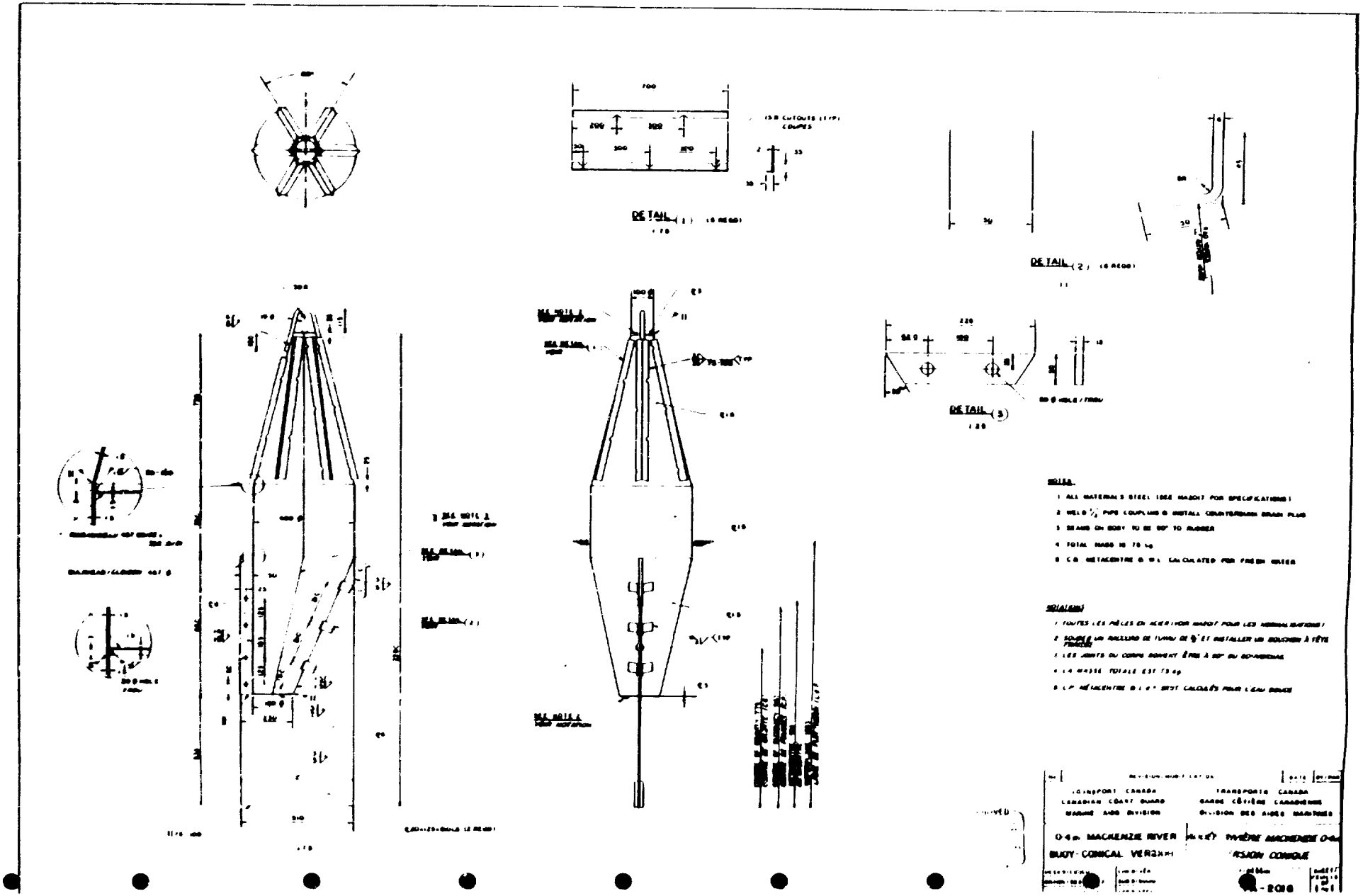
DETAIL (1)
DETAIL (2)
DETAIL (3)
NOTES
1 ALL MATERIALS STEEL (SEE MAGNOT FOR SPECIFICATIONS)
2 WELD ½" PIPE COUPLING & INSTALL COUNTERSUNK DRAIN PLUG
3 SEAMS ON BODY TO BE 90° TO RUBBER
4 TOTAL MASS IS 70 kg
5 C.G. METACENTRE & W.L. CALCULATED FOR FRESH WATER
TRANSPORT CANADA
CANADIAN COAST GUARD
MARINE AIDS DIVISION
TRANSPORTS CANADA
GARDE CÔTIÈRE CANADIENNE
DIVISION DES AIDES MARITIMES
MACKENZIE RIVER
BUOY - CONICAL VERSION
TYPHÈRE MACKENZIE
VERSION CONIQUE

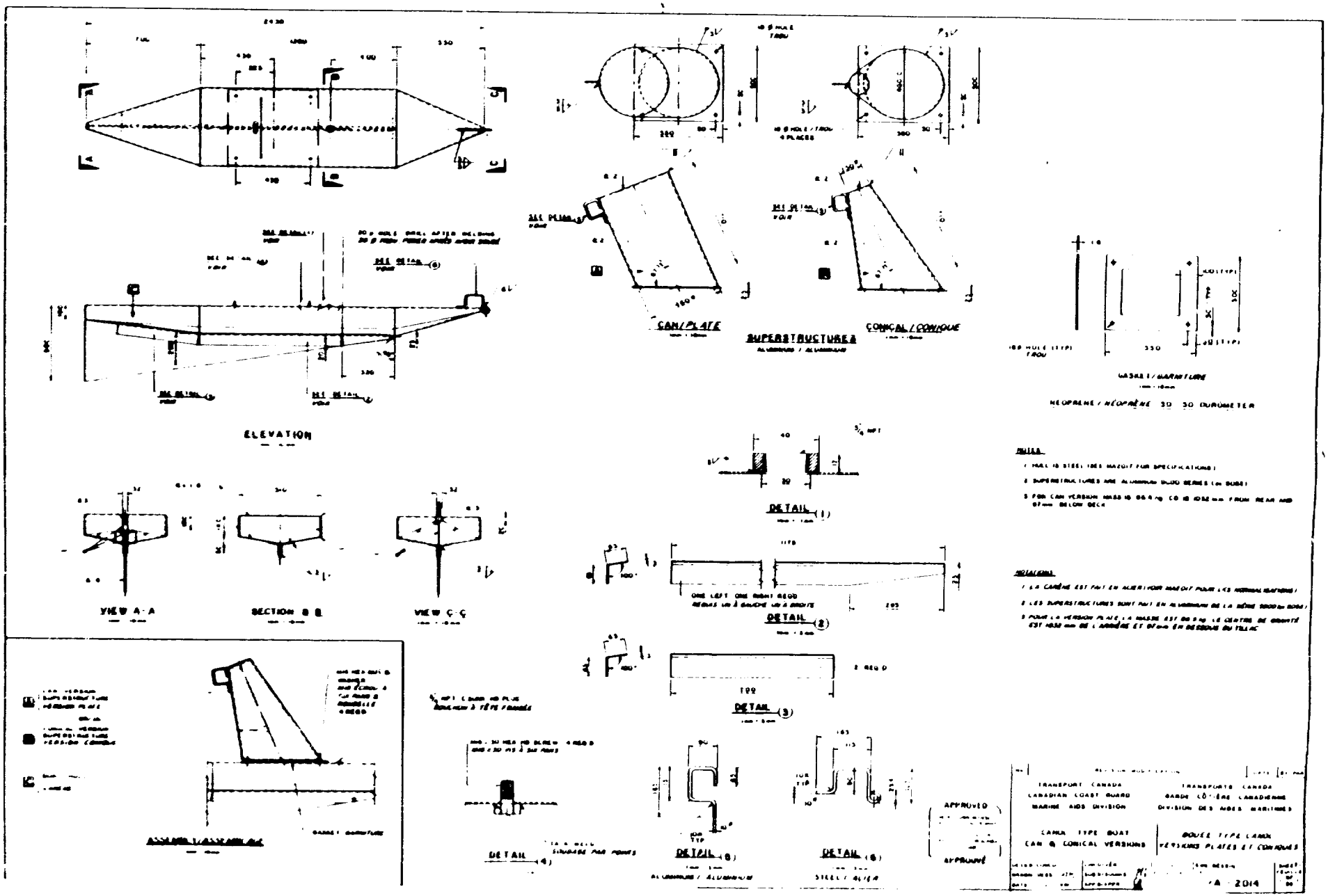
ELEVATION
CAN/PLATE
SUPERSTRUCTURES
CONICAL / CONIQUE
GASKET / GARNITURE
NEOPRENE / NÉOPRÈNE 30 - 50 DUROMETER
VIEW A-A
SECTION B-B
VIEW C-C
DETAIL (1)
DETAIL (2)
DETAIL (3)
DETAIL (4)
DETAIL (5)
DETAIL (6)
ASSEMBLY / ASSEMBLAGE
APPROVED
APPROUVÉ
TRANSPORT CANADA
CANADIAN COAST GUARD
MARINE AIDS DIVISION
TRANSPORTS CANADA
GARDE CÔTIÈRE CANADIENNE
DIVISION DES AIDES MARITIMES
CANA TYPE BUOY
CAN & CONICAL VERSIONS
BOUÉE TYPE CANA
VERSIONS PLATES ET CONIQUES
2014

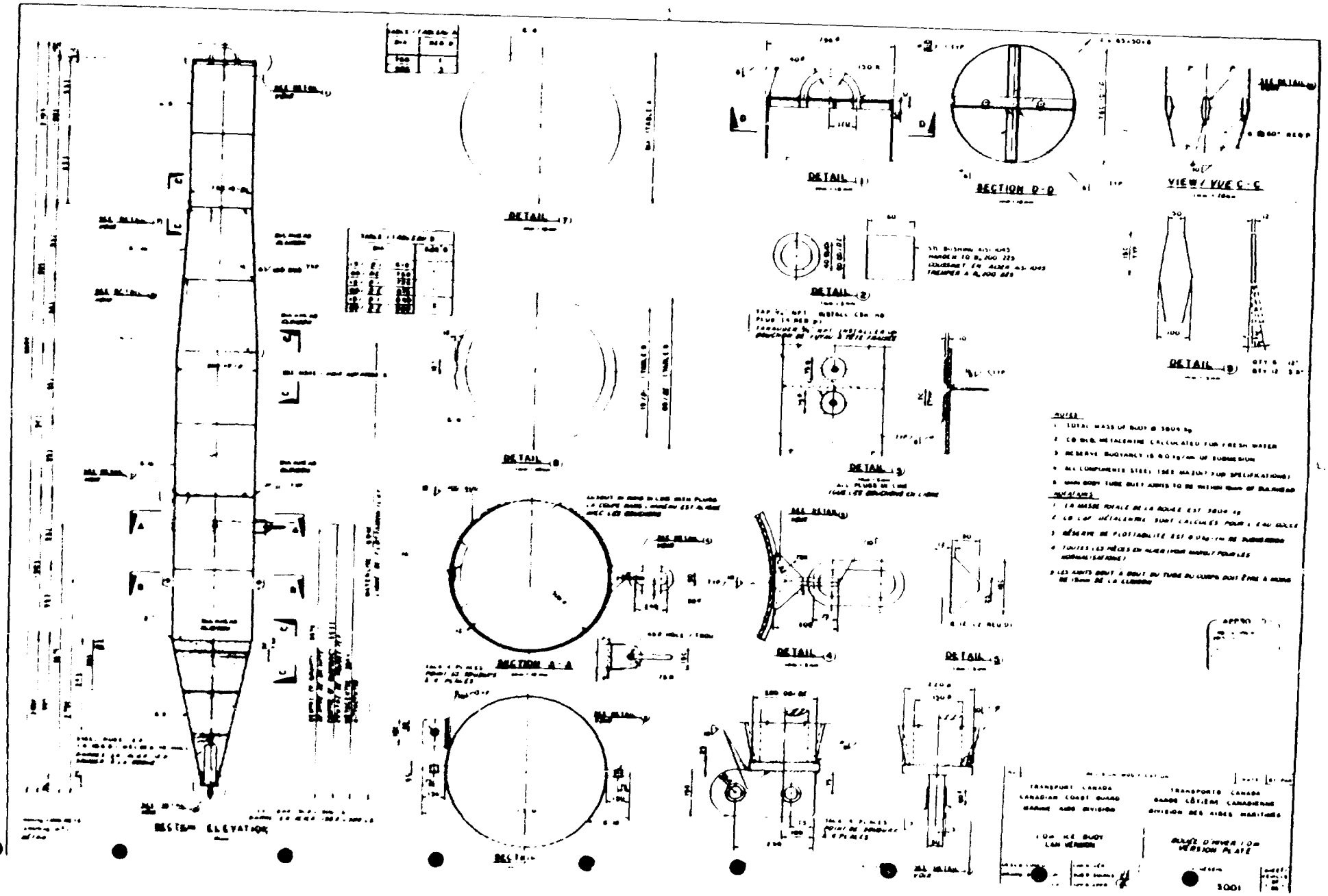
SECTION ELEVATION
DETAIL (1)
DETAIL (2)
DETAIL (3)
DETAIL (4)
DETAIL (5)
DETAIL (6)
DETAIL (7)
DETAIL (8)
DETAIL (9)
SECTION A-A
SECTION D-D
VIEW / VUE C-C
NOTES
TRANSPORT CANADA
CANADIAN COAST GUARD
MARINE AIDS DIVISION
TRANSPORTS CANADA
GARDE CÔTIÈRE CANADIENNE
DIVISION DES AIDES MARITIMES
BOUÉE D'HIVER 10m
VERSION PLATE
3001

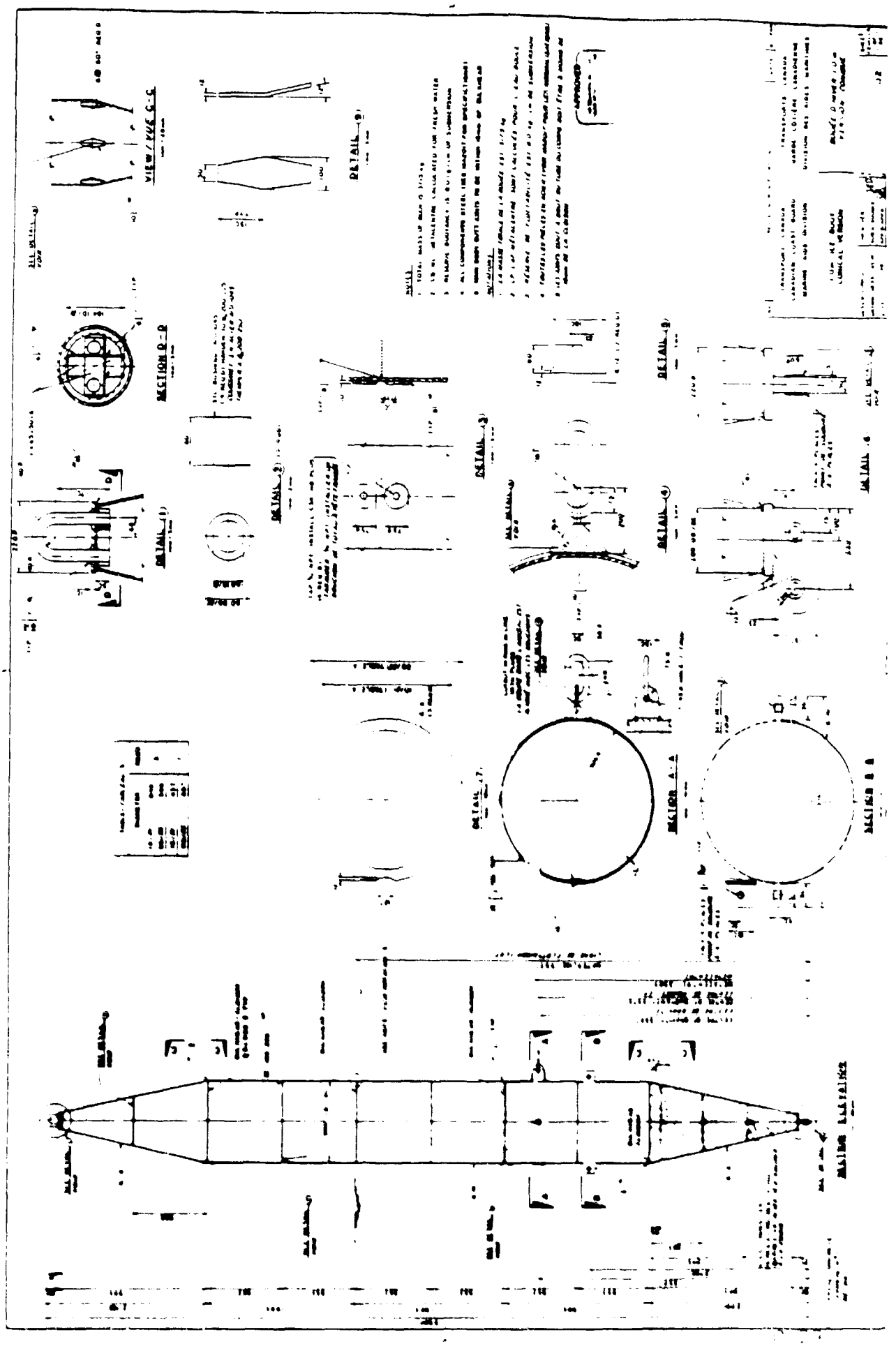
VIEW / VUE C-C
SECTION B-B
DETAIL 1
DETAIL 2
DETAIL 3
DETAIL 4
DETAIL 5
DETAIL 6
DETAIL 7
DETAIL 8
DETAIL 9
SECTION A-A
SECTION B-B
MAIN LANDING GEAR

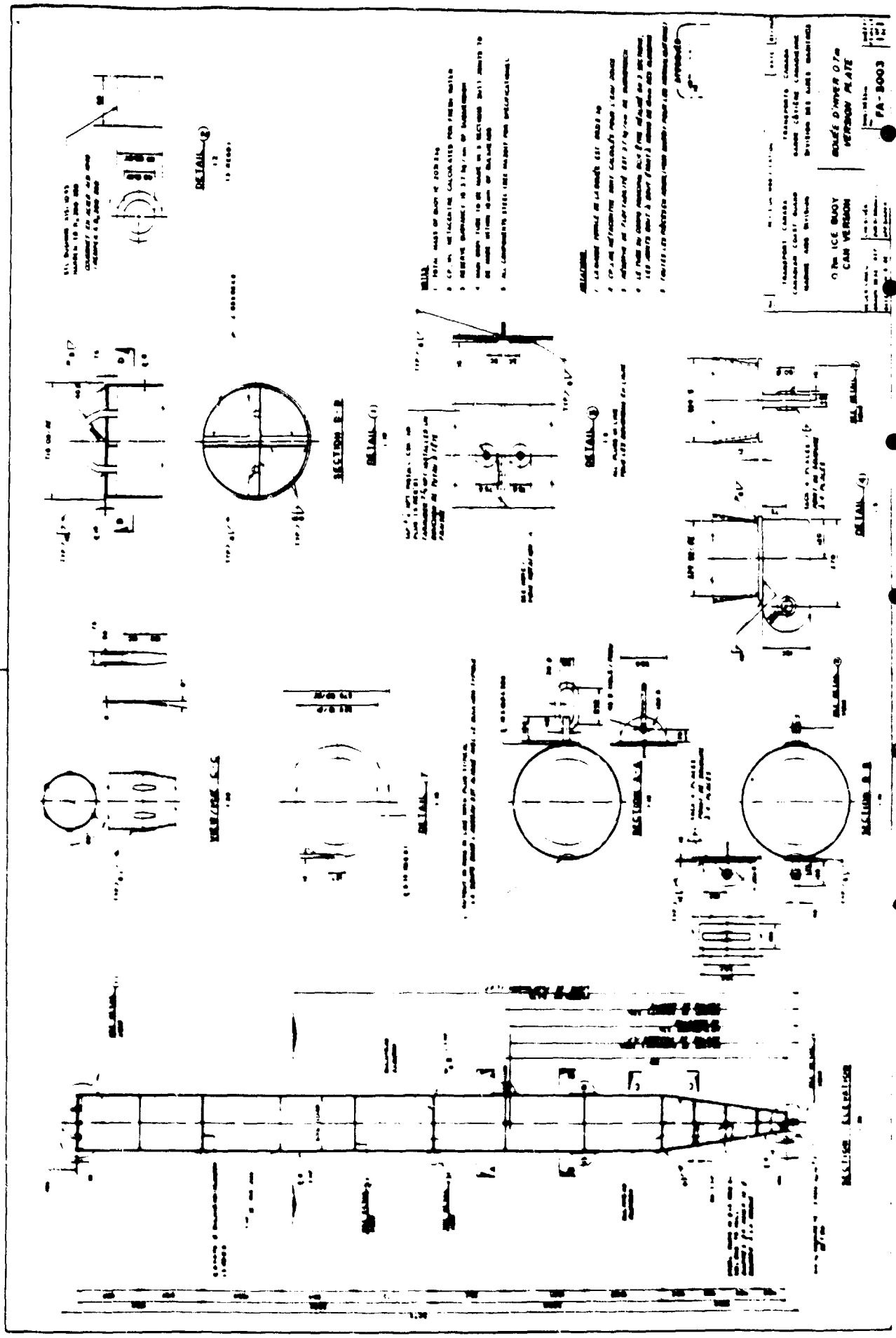

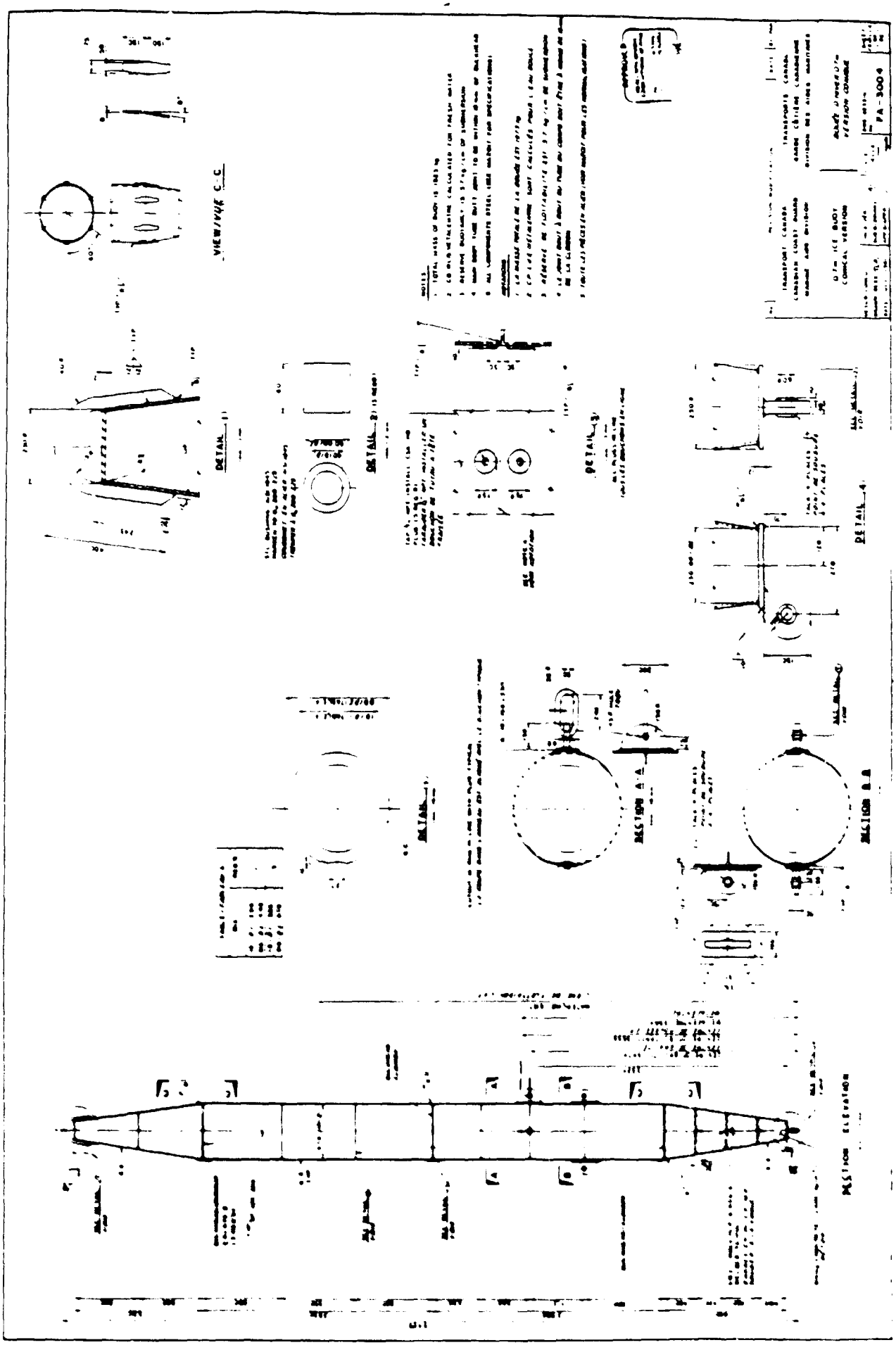
VIEW/VUE C-C
DETAIL 1
DETAIL 2
DETAIL 3
DETAIL 4
DETAIL 5
SECTION A-A
SECTION B-B
SECTION ELEVATION
TRANSPORT CANADA
TRANSPORT CANADA
FA-3004

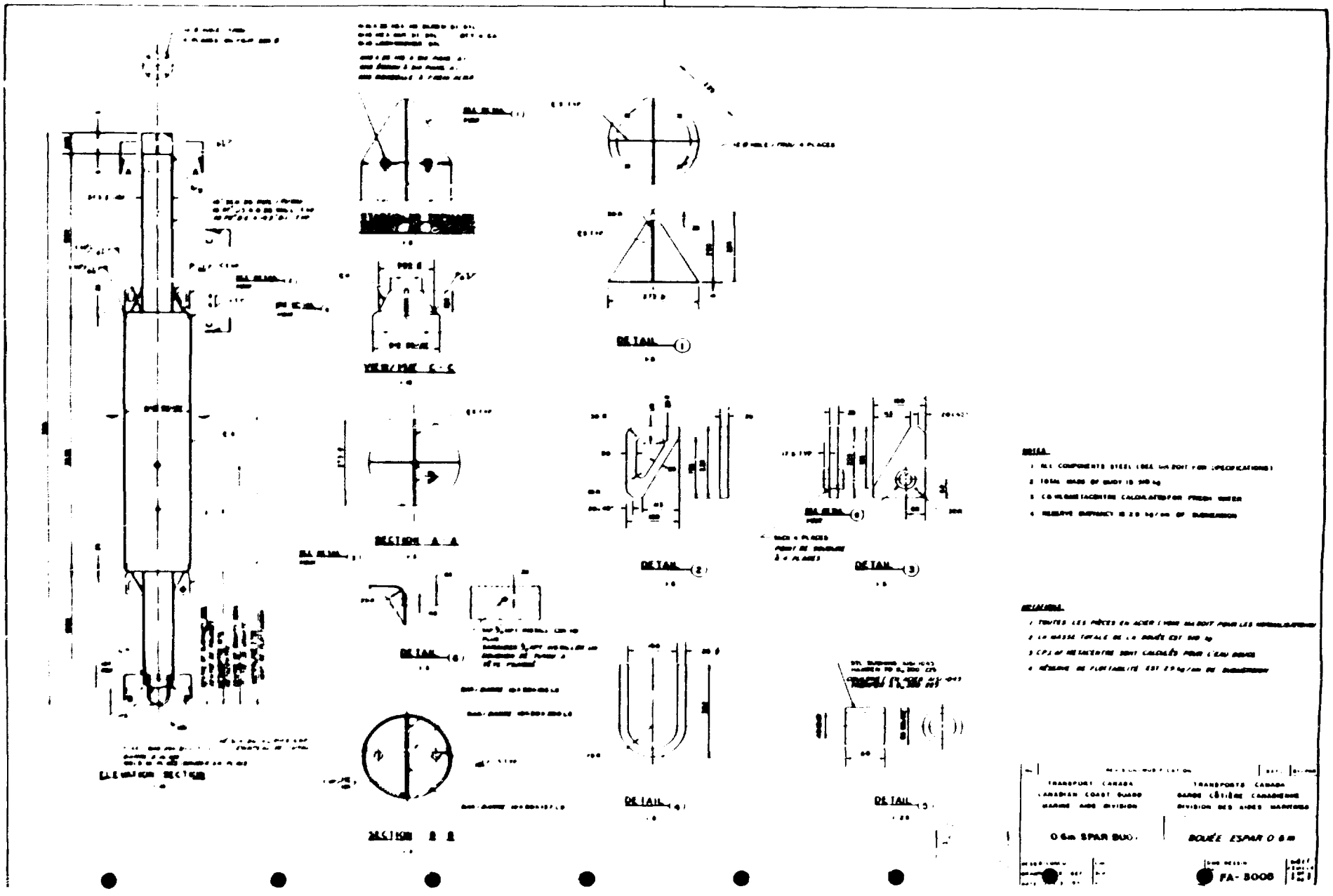
DETAIL 1
DETAIL 2
DETAIL 3
DETAIL 4
DETAIL 5
DETAIL 6
SECTION A A
SECTION B B
ELEVATION SECTION
TRANSPORT CANADA
CANADIAN COAST GUARD
MARINE AIDS DIVISION
TRANSPORTS CANADA
GARDE CÔTIÈRE CANADIENNE
DIVISION DES AIDES MARITIMES
0.6m SPAR BUOY
BOUÉE ESPAR 0.6 m
FA-3006

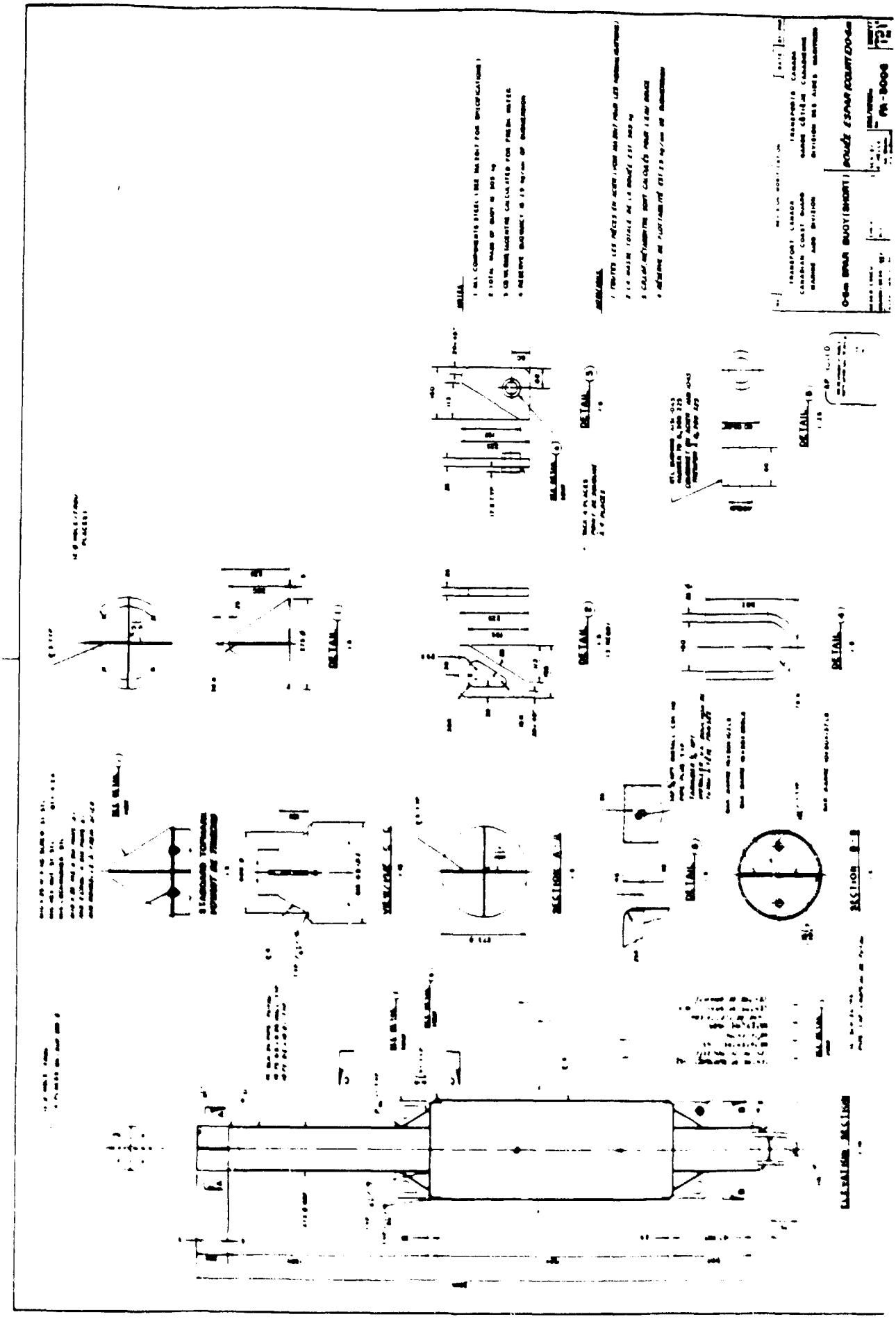

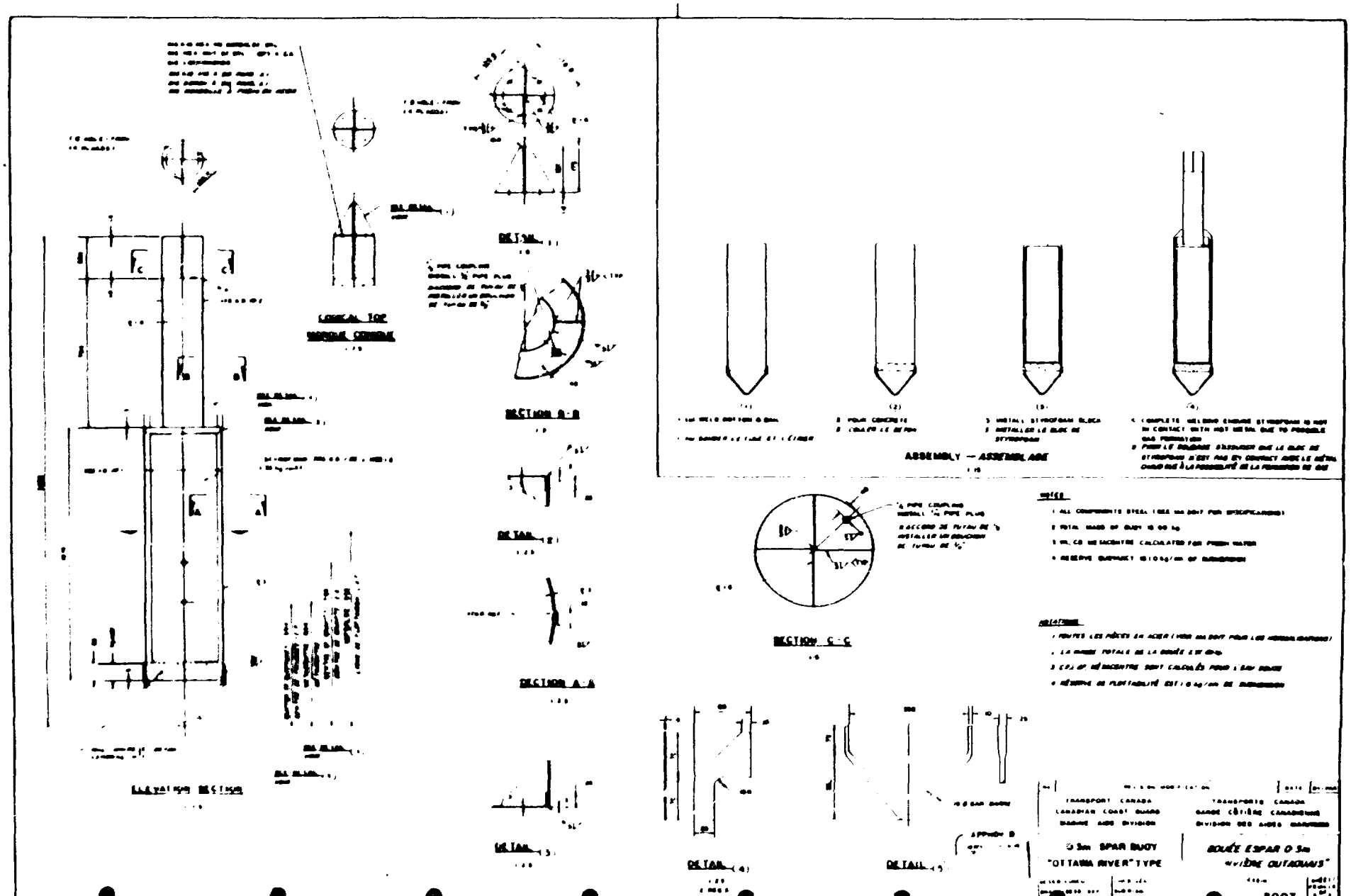
CONICAL TOP
DETAIL
SECTION B-B
DETAIL
DETAIL
SECTION A-A
DETAIL
ELEVATION SECTION
ASSEMBLY — ASSEMBLAGE
SECTION C-C
DETAIL
DETAIL
TRANSPORT CANADA
CANADIAN COAST GUARD
TRANSPORTS CANADA
GARDE CÔTIÈRE CANADIENNE
SPAR BUOY
"OTTAWA RIVER" TYPE
BOUÉE ESPAR
"RIVIÈRE OUTAOUAIS"
8007

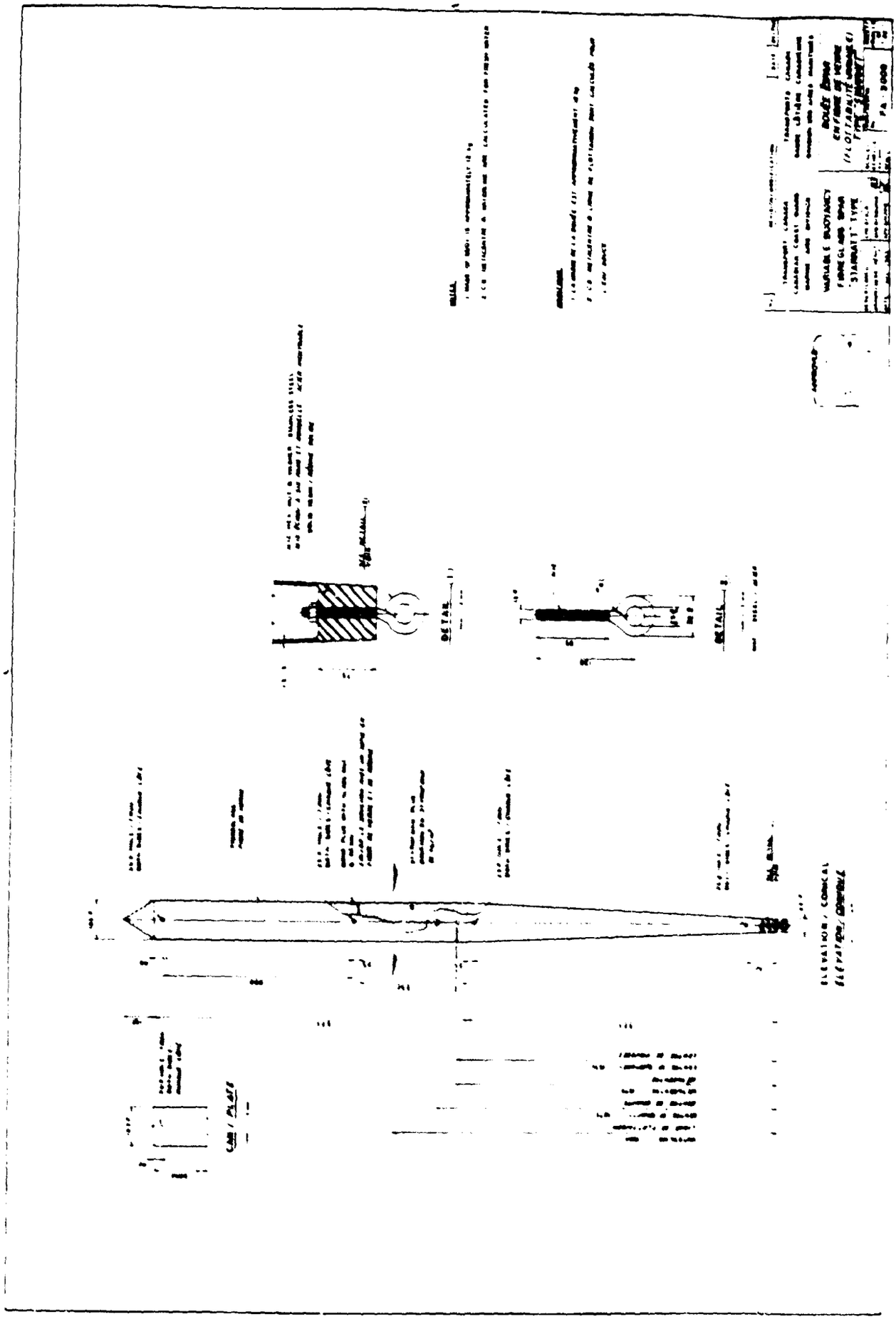
DETAIL
DETAIL
ELEVATION / CONICAL
ELEVATION / CONICAL
VARIABLE BUOYANCY
FIBREGLASS SPAR
'STARRATT' TYPE
BUOY SPAR
CENTRE OF MASS
(ILLUSTRATIVE ONLY)
TRANSPORT CANADA
CANADIAN COAST GUARD
MARINE AND OFFICE
P.A. 3000

THIS PAGE INTENTIONALLY LEFT BLANK

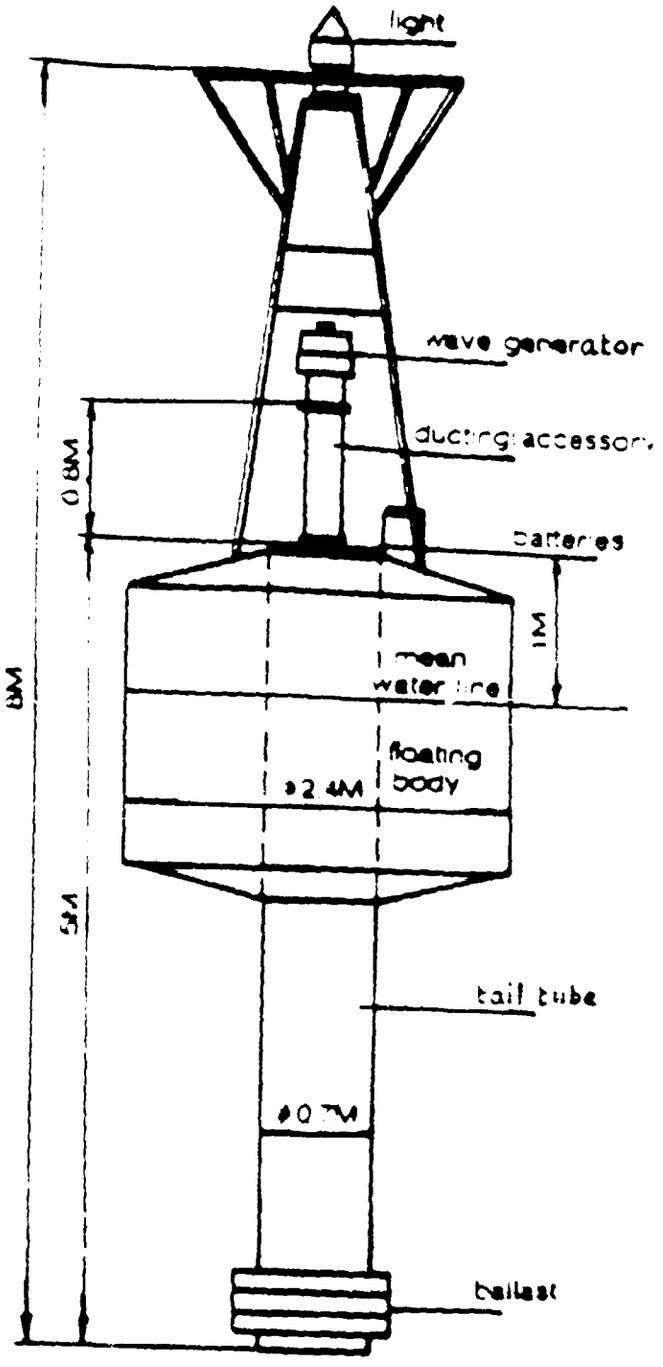
light
wave generator
ducting accessory
0.8M
batteries
1M
8M
mean
water line
floating
body
ø2.4M
5M
tail tube
ballast

CHINA MPG [illegible]

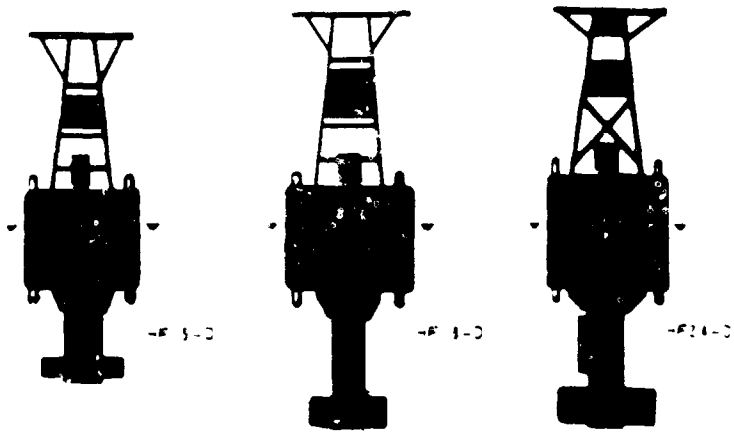

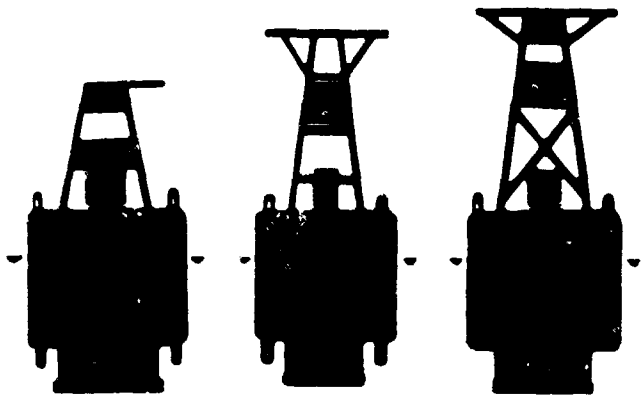

HF1.5-D2 HF1.8-D2 HF2.4-D2

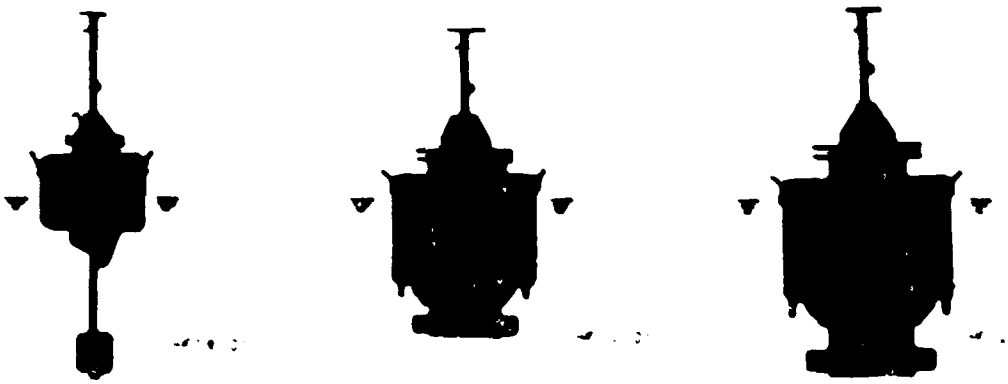

CHINA MFG 2-2

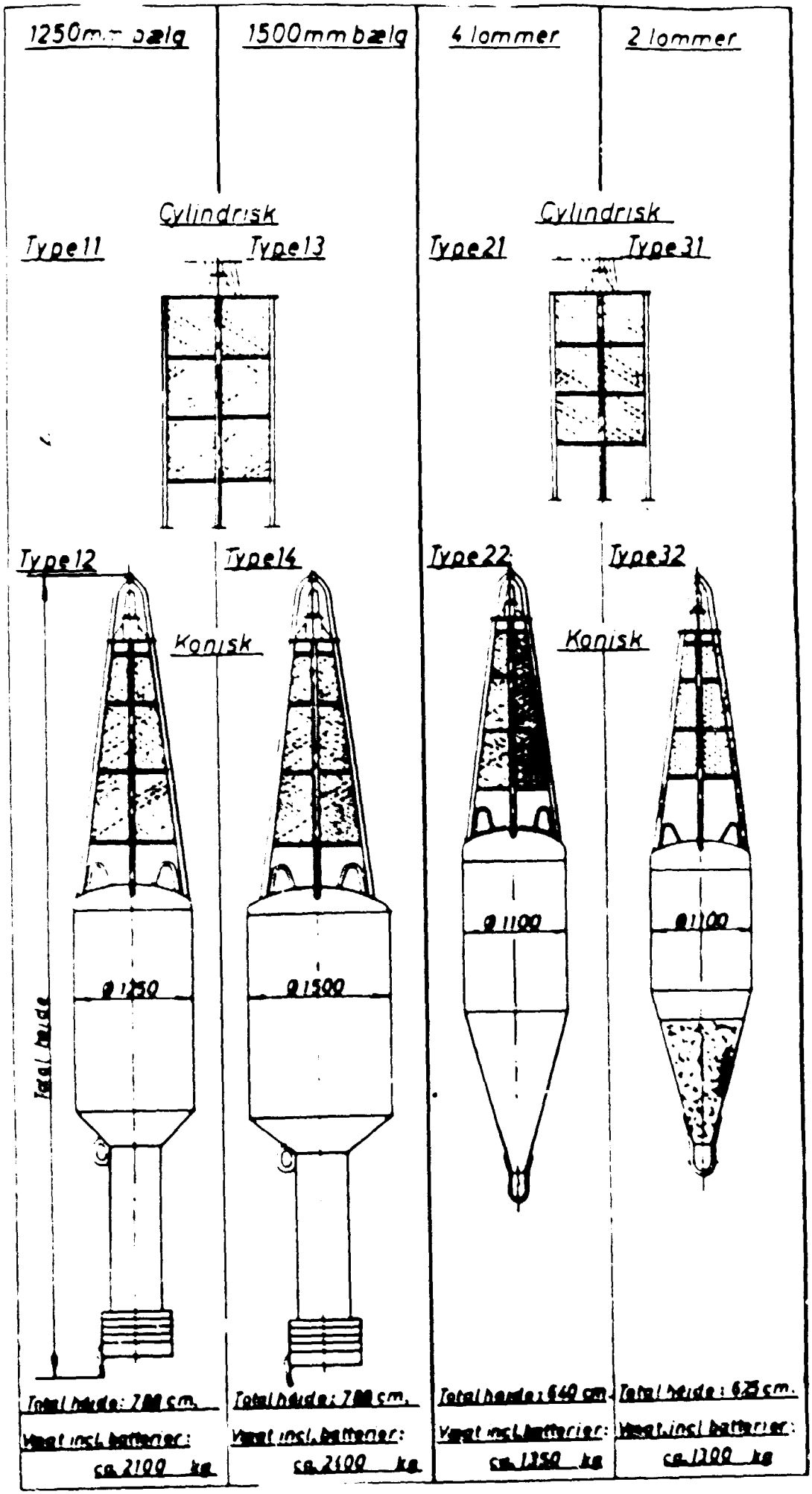

DENMARK - 10 DENMARK - 11 DENMARK - 12 DENMARK - 13

DENMARK - 1 DENMARK - 2 DENMARK - 3 DENMARK - 4

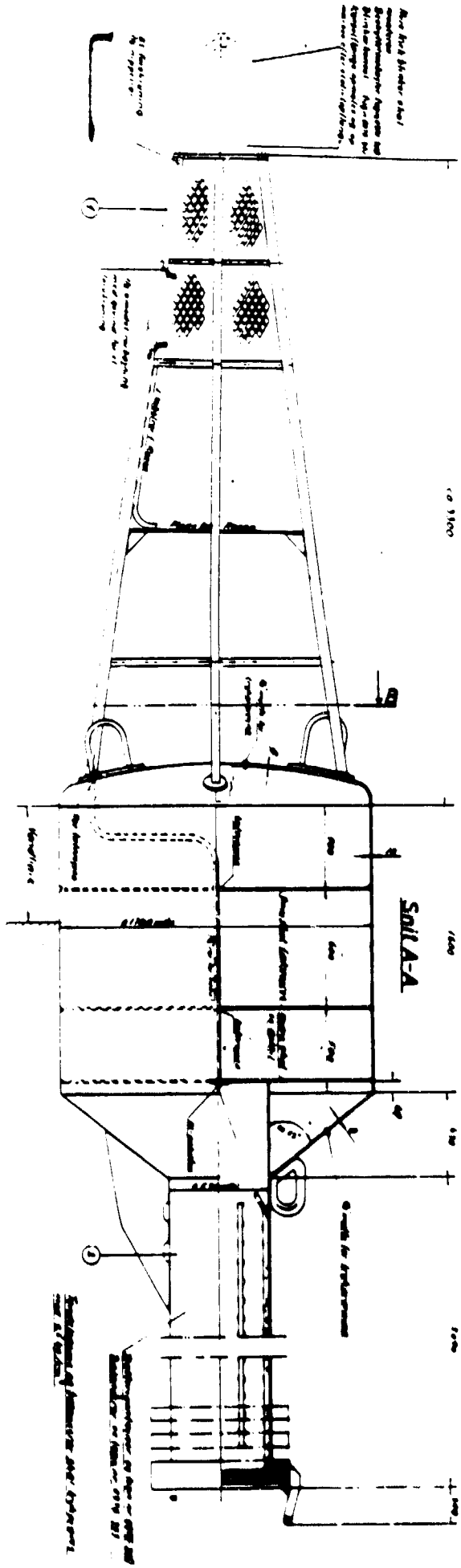

DENMARK - 2A

Ændret 4 lommer

Cylindrisk

Type 25

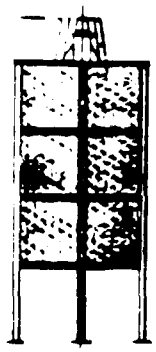

Type 26

Konisk

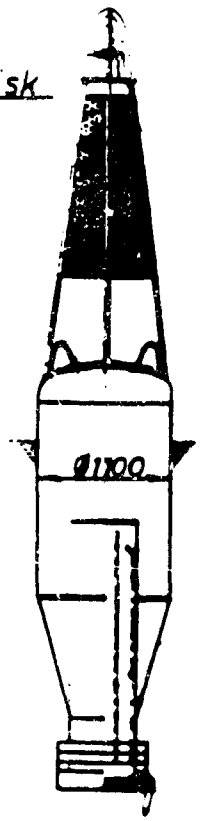

Totalhøjde: 620 cm.

Vægt incl. batterier:
ca. 1800 kg

Tønde for dybt og uroligt vand

Type 43

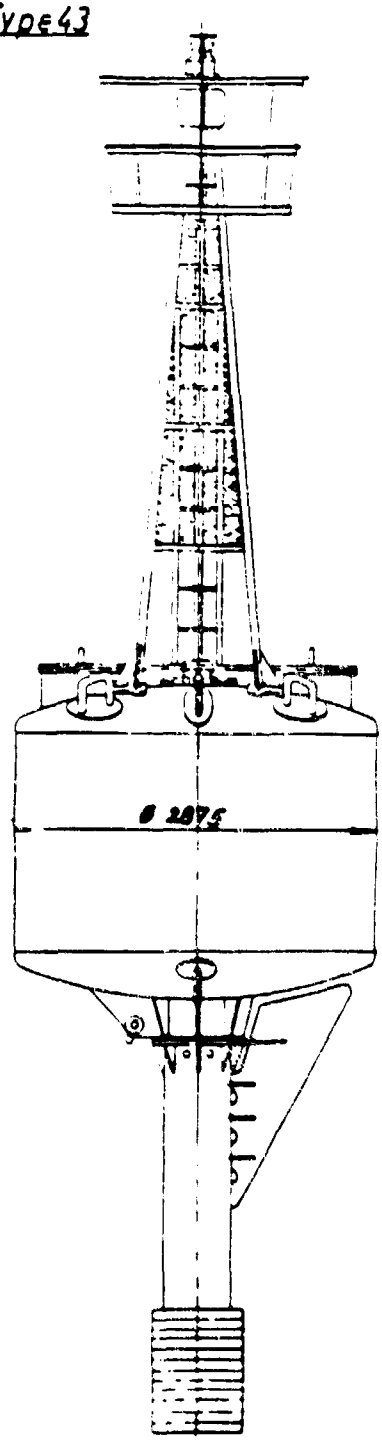

Totalhøjde: 1055 cm.

Vægt incl. batterier:
ca. 8000 kg

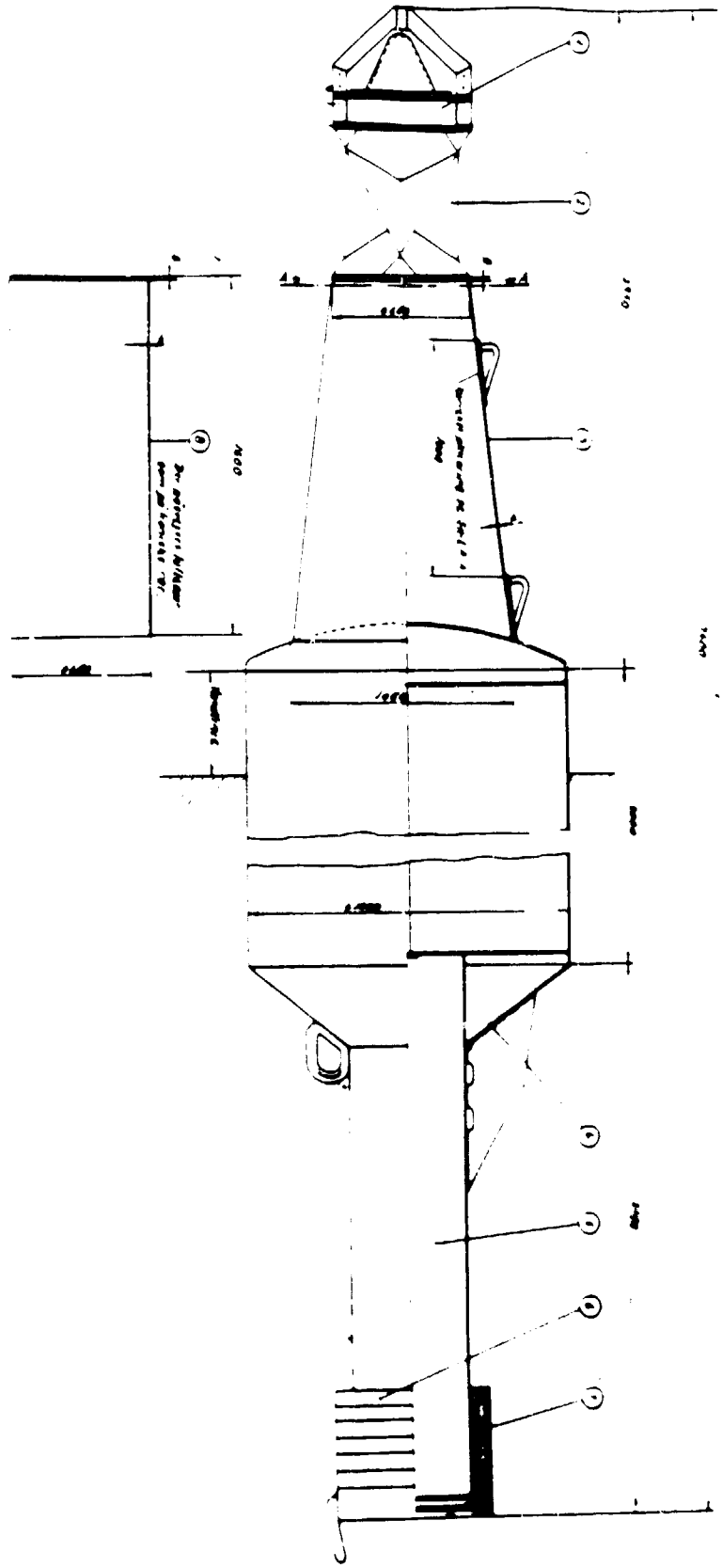

Ændr: Vølund tønde

Type52

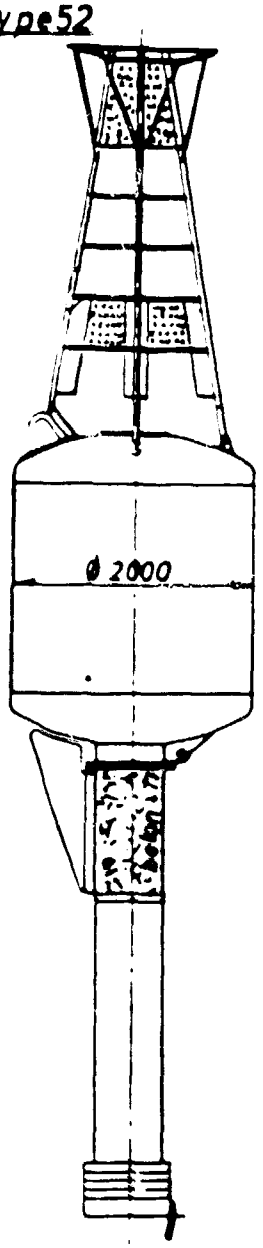

Højder forskelligeher angivet: længste

Total højde: 1000 cm.

Vægt incl. batterier: ca. 4 kg

Ændret Drogden tønde

Cylindrisk

Type15

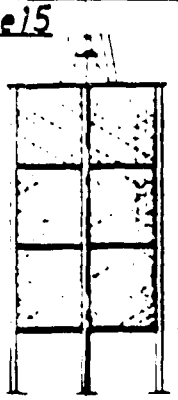

Type16

Konisk

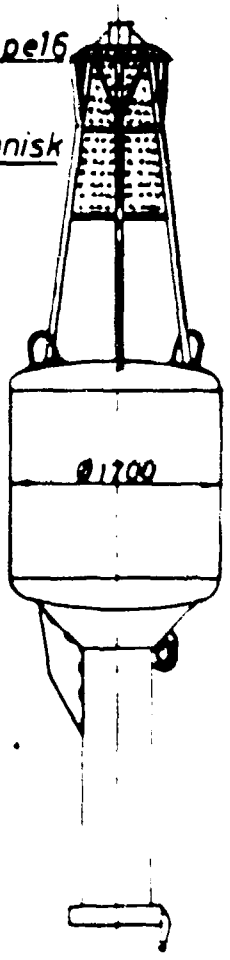

Total højde: 760 cm.

Vægt incl. batterier: ca. 2100 kg

Tønde for lavt vand

Type62

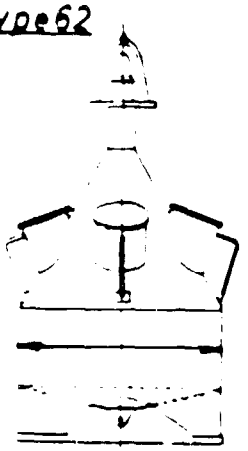

Total højde: 272 cm.

Vægt incl. batterier: ca. 1300 kg

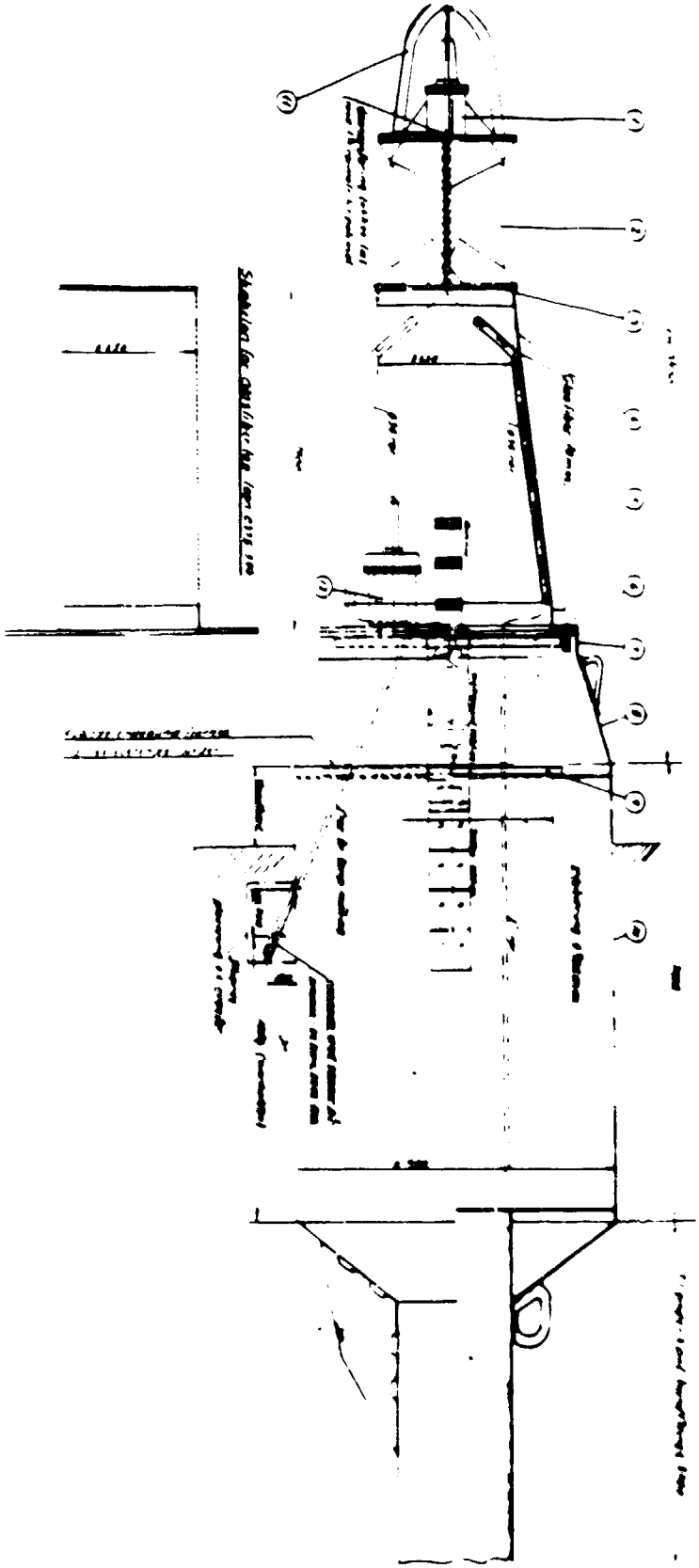

DERNVAGER I TYPE C
CAN

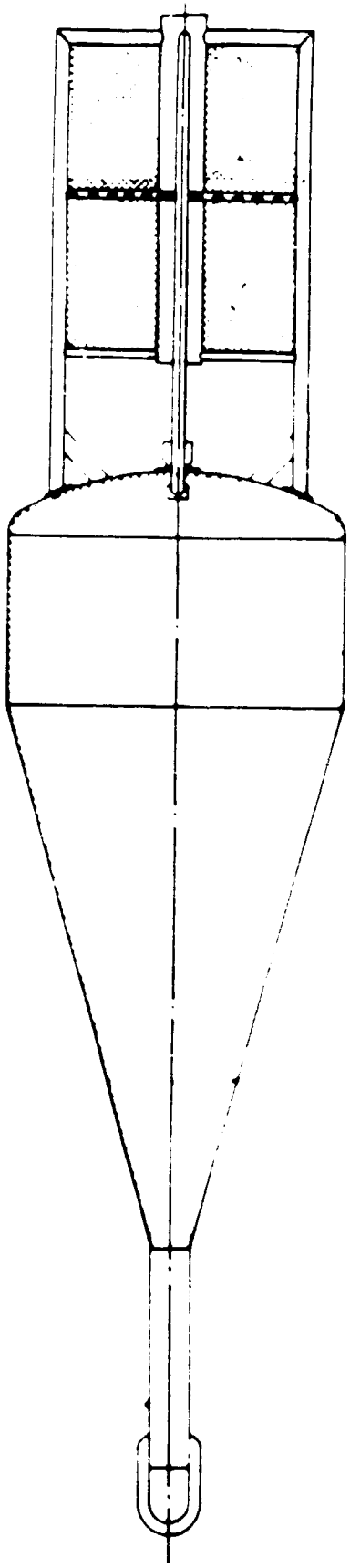

JERNVAGER I TYPE K
CONE

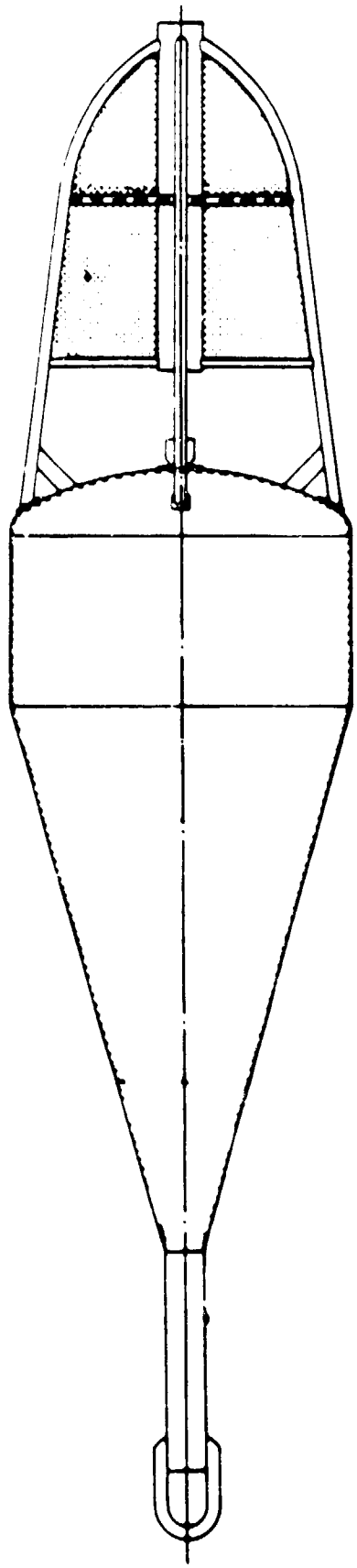

JERNVAGER I TYPE S

PILL

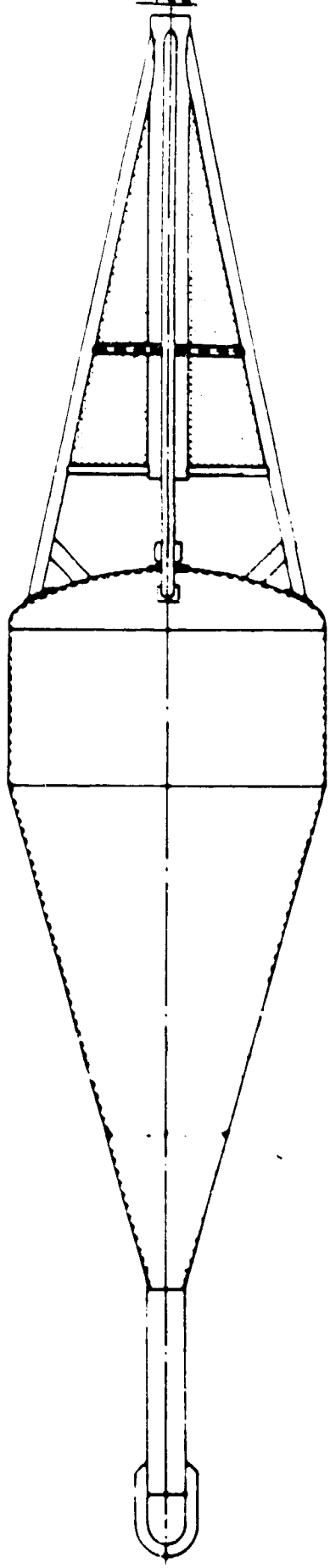

Vager I

(vægt ca. 365 kg.)

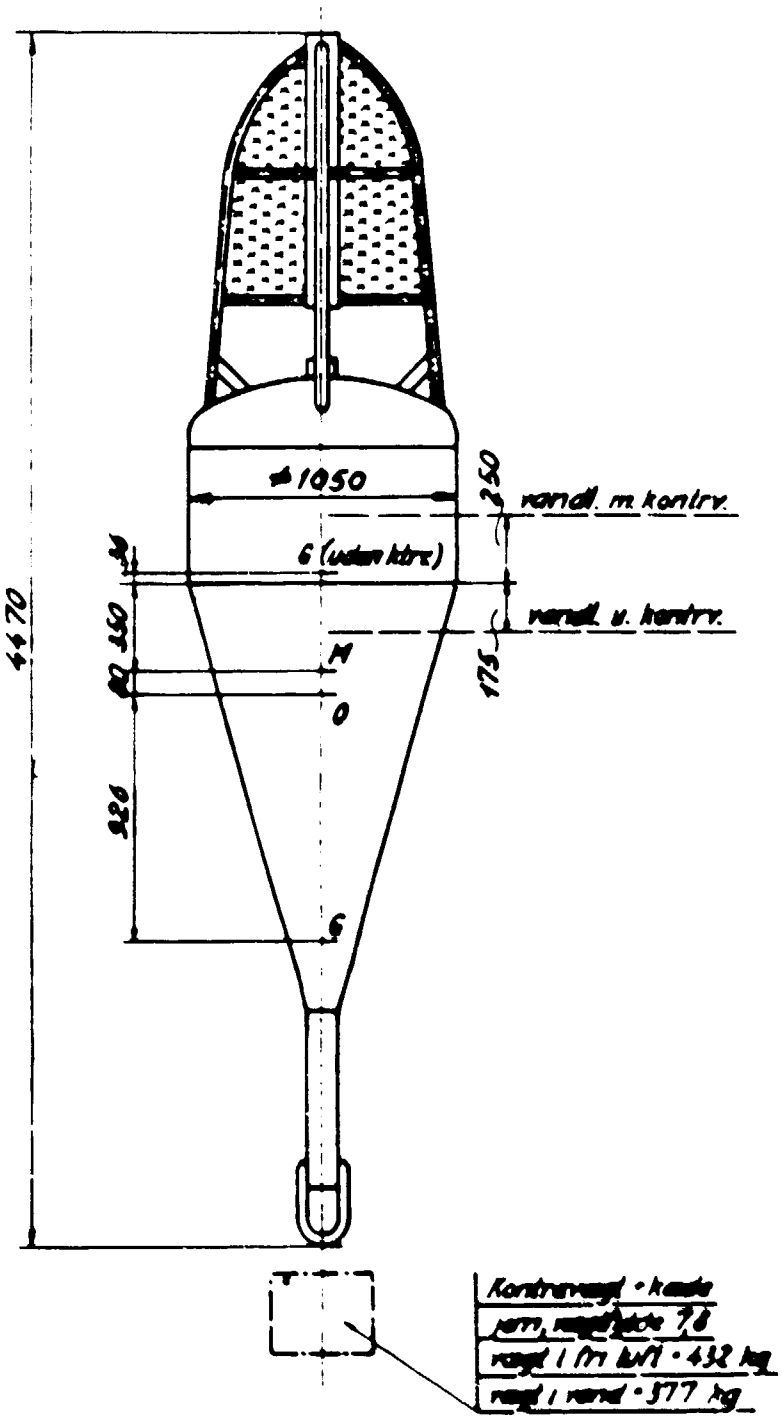

Vager II

(vægt ca. 220 kg.)

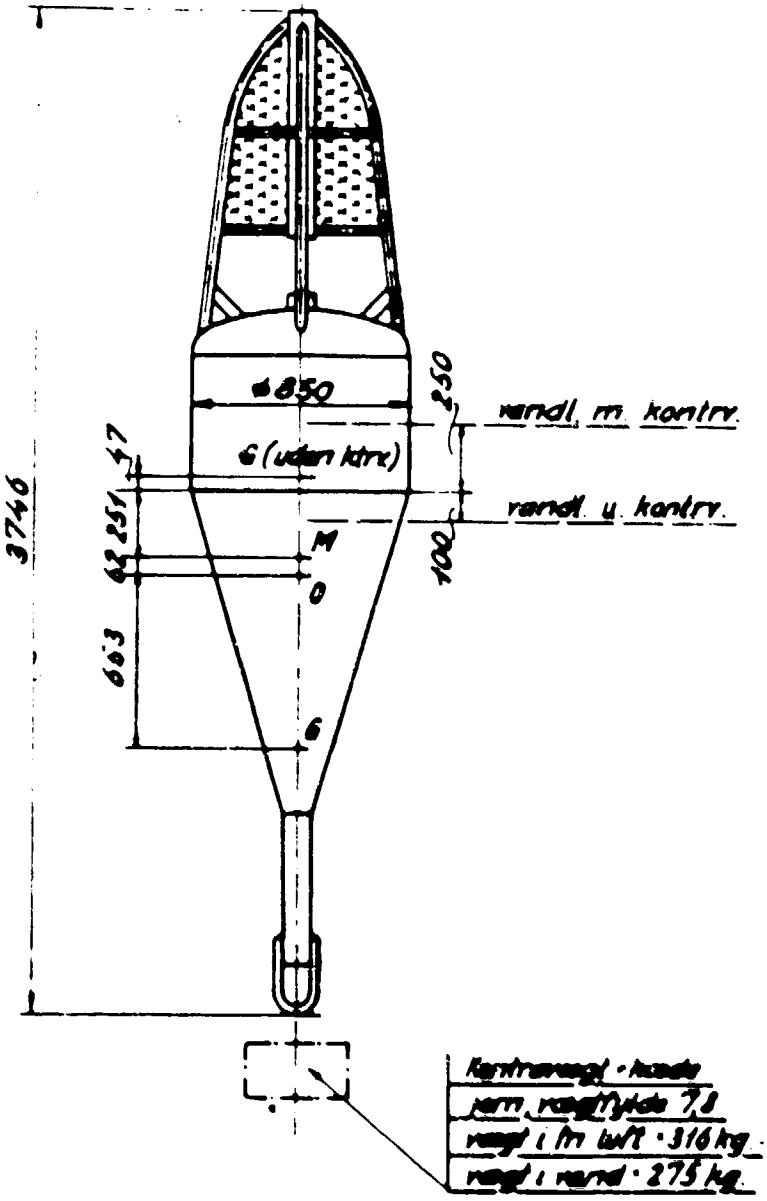

Vager III

(vægt ca. 128 kg.)

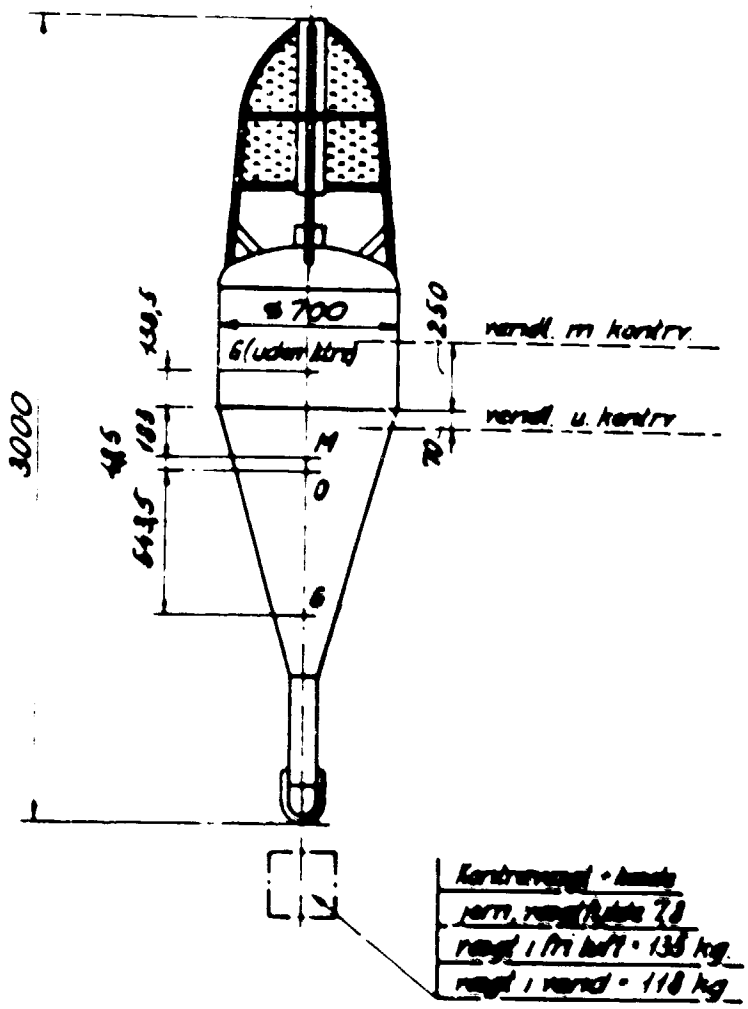

Vager IV

(vægt ca. 77 kg)

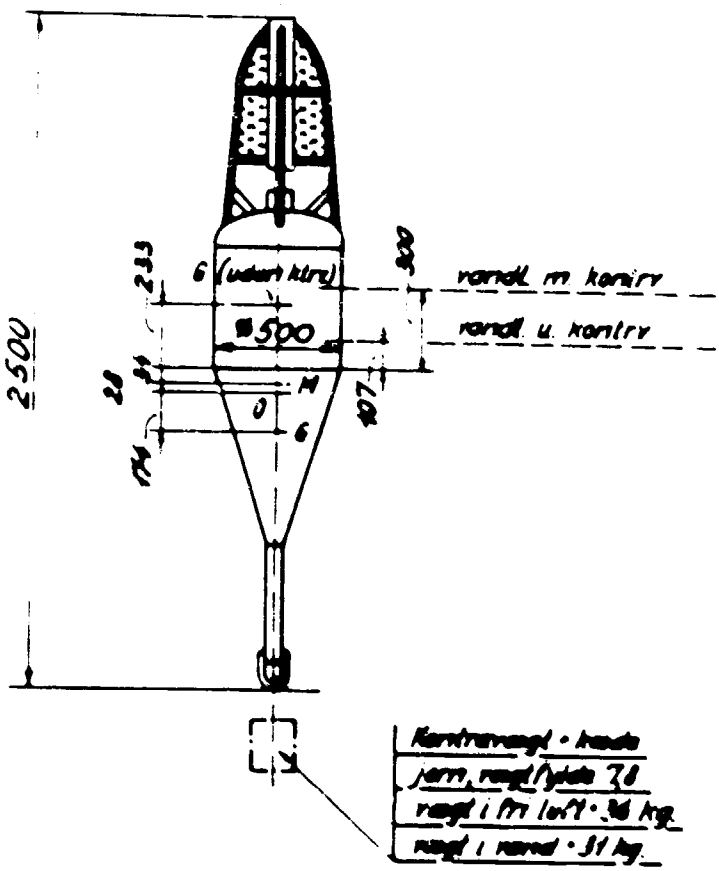

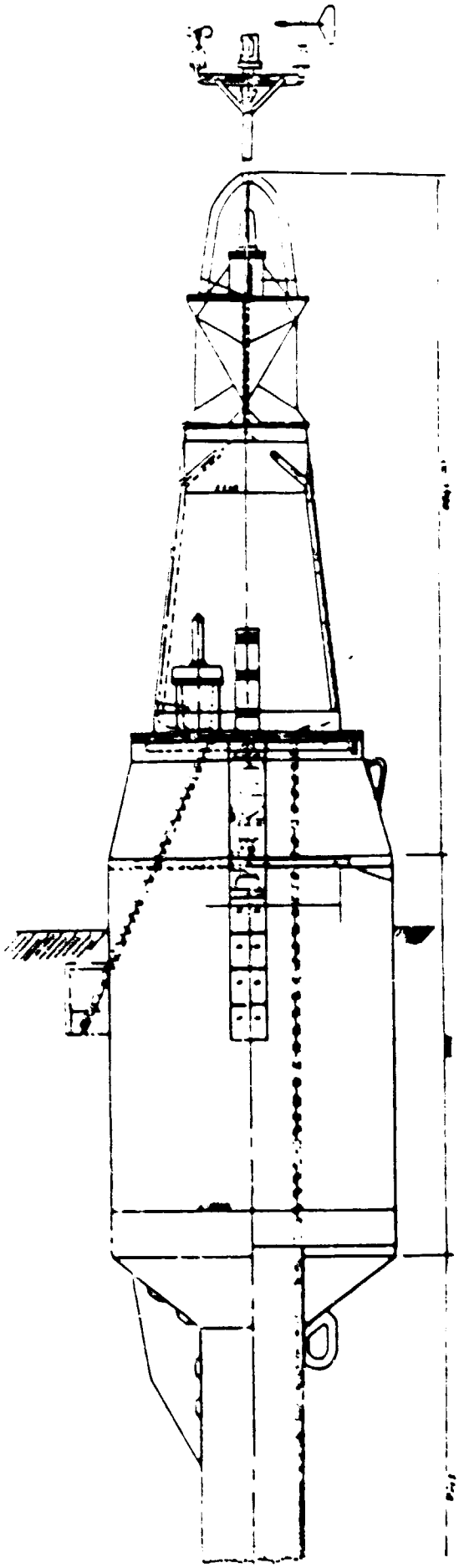

HIGH FOCAL PLANE BUOY

WITH 375 mm DALEN LIGHT & AUTOMATIC ELECTRIC POWERED FOG SIGNAL

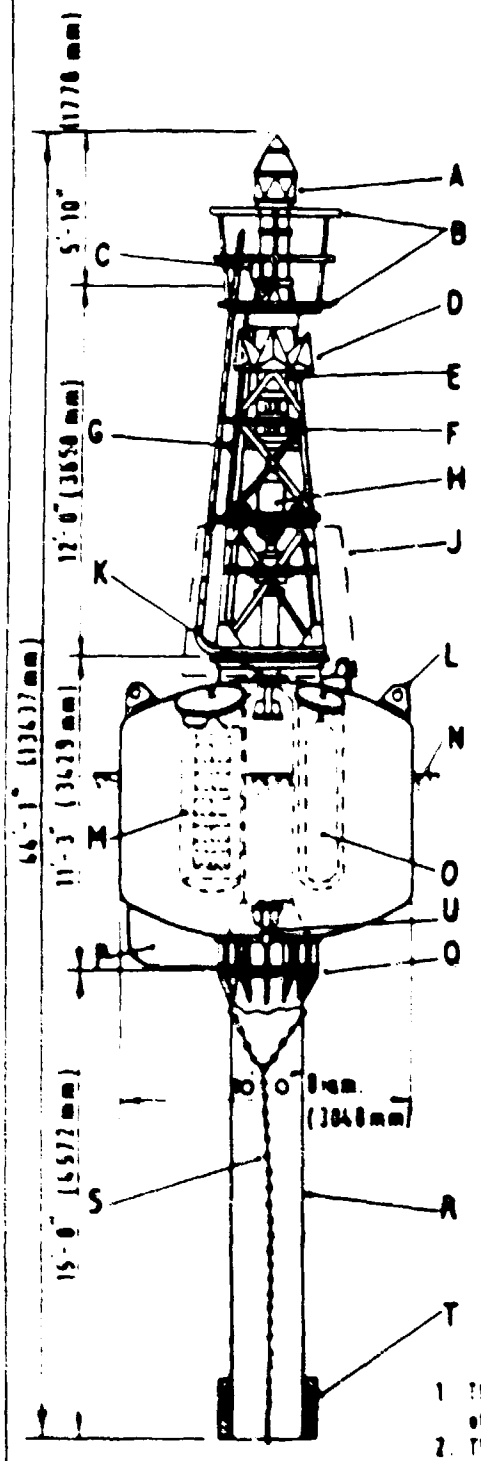

FIG. 1. ELEVATION OF BUOY

- A A G A. 375 mm Dalen Lantern
- B Gallery & Gallery Rail
- C Deck Type Valve
- D A G A 6 Radar Reflectors
- E Power Control Unit
- F Electric Powered Fog Signal
- G Stop Valve
- H Air Whistle
- J Batwings (Fitted as Required)
- K Air Tube
- L Lifting Eyes
- M Battery Packs (2)
- N Water Line
- O Acetylene Gas Cylinders (2)
- P Plate Rudder
- Q Tube Connection
- R Tail Tube
- S Anti-Fouling Chain
- T Ballast Weight
- U Bridle Mooring Eyes

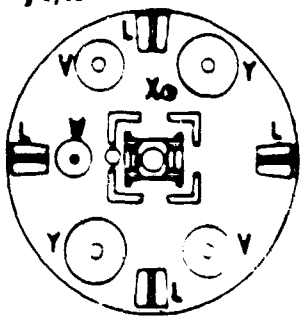

FIG. 2. PLAN OF BUOY BODY

- V Acetylene Cylinder Pockets, each carrying 1-A 138 Cylinder
- W Manhole.
- X Acetylene Deck Valve
- L Lifting Eyes
- Y Battery Pack Pockets

1. The whistle (H) is operated by air forced up the tube by the motion of the buoy
2. The Anti-Fouling Chain (S) swings freely inside the tube preventing settlement of Marine Growth
3. Mooring Details have been omitted for clarity and will be found under Buoy Moorings.

Tail Tube length	15'-0"	4572 mm
Body	11'-3"	3429 mm
Lamp Trestle	12'-0"	3658 mm
Lamp	5'-10"	1778 mm
Overall Length	66'-1"	13637 mm

WEIGHT, WHEN COMPLETE 11 TONS 7 CWTS (11532 kg)

STATIONS
CORTON
NARROW DEEP CHANNELS

HIGH FOCAL PLANE BUOY

ACETYLENE GAS BUOY WITH LIGHT, WHISTLE & CO_2 AUTOMATIC BELL.

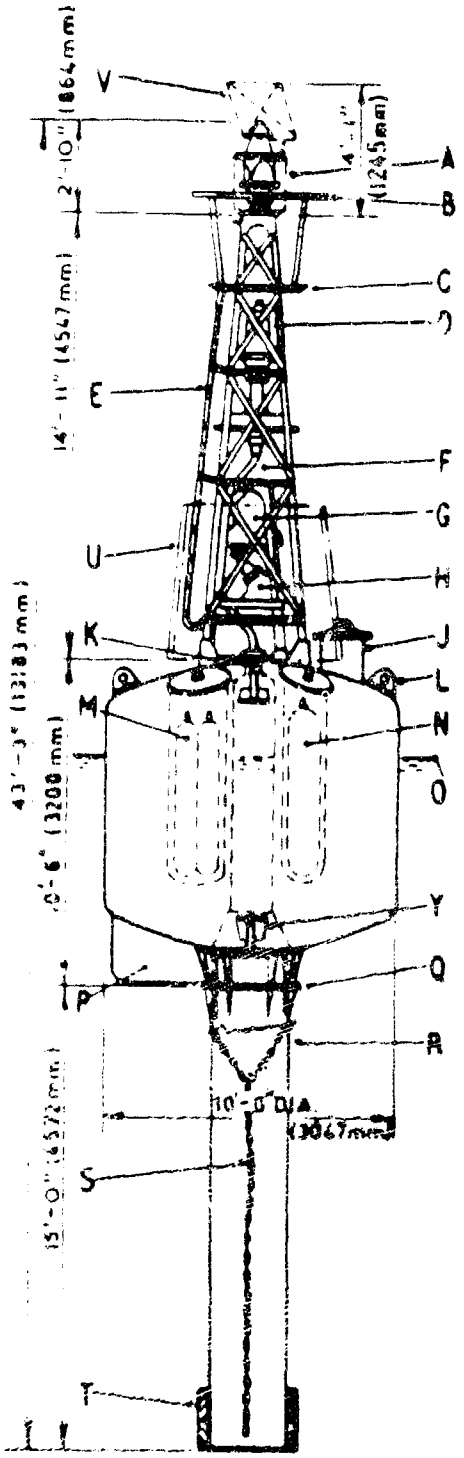

FIG. 1.

FIG. 1. ELEVATION OF BUOY.

A Lantern.
B Gallery Rail.
C Gallery
D Air Whistle.
E Ladder.
F Air Whistle Pipe
G 3½ cwt Bell.
H Automatic Bell Striker.
J CO_2 Control Unit.
K Air Tube.
L Lifting Eyes.
M CO_2 Cylinders. [6 No.]
N Acetylene Cylinders [2 No.]
O Water Line.
P Plate Rudder.
Q Tail Tube Connection.
R Tail Tube.
S Anti-Fouling Chain
T Ballast Weight.
U Batwings [Fitted as Required]
V Radar Reflector & Hinged Mounting
Y Bridle mooring eyes.

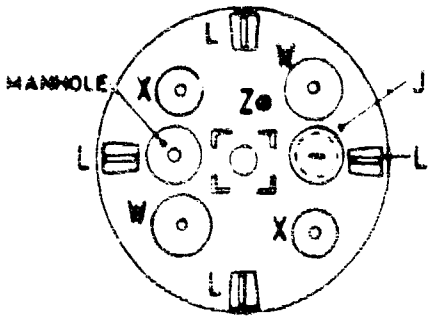

FIG. 2. PLAN OF BUOY BODY.

J CO_2 Control Unit.
L Lifting eyes.
W CO_2 Cylinder Pockets, each carrying 3, cc 58 Cylinders
X Acetylene Cylinder Pockets, each carrying 1-A130 Cylinder.
Z Acetylene Back Valve

1. The whistle [D] is operated by air forced up the tube by the motion of the buoy
2. The Anti Fouling Chain [S] swings freely inside the tube preventing settlement of Marine Growth.
3. Mooring Details have been omitted for clarity and will be found under Buoy Moorings.

Tail Tube length	15'-0"	4572 mm
Body	10'-6"	3200 mm
Lamp Trestle	14'-11"	4547 mm
Lamp	2'-10"	864 mm
Overall Length	43'-3"	13183 mm

WEIGHT WHEN COMPLETE 18 3/4 TONS 18922 kg

HIGH FOCAL PLANE BUOY

WITH WHISTLE AND OR WAVE ACTUATED BELL

ALTERNATIVE

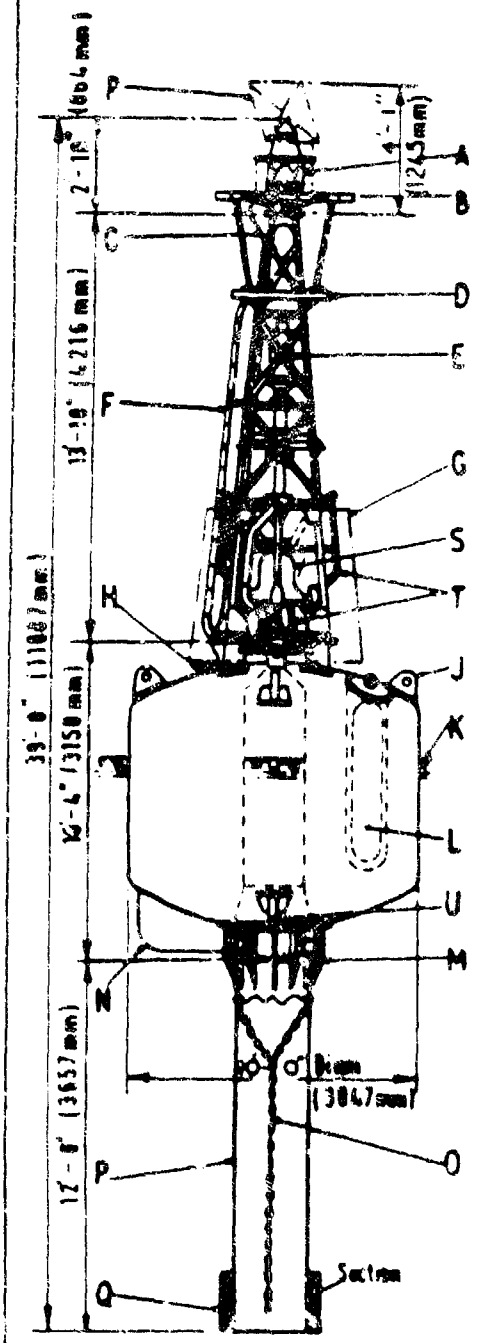

FIG. 1.

FIG. 1. ELEVATION OF BUOY

A Lantern.
B Gallery Rail.
C Gas Supply Pipe.
D Gallery.
E Air Whistle.
F Ladder
G Gutwings {Can, Conical or Spherical shape Fitted as Required.
H Gas Back Valve.
J Lifting Eyes.
K Water line.
L Acetylene Gas Cylinder Pockets (4 No.)
M Tail Tube Connection.
N Plate Rudder.
O Anti-Fouling Chain.
P Tail Tube
Q Ballast Weight.
R Radar Reflector on Hinged Mounting
S Wave Actuated Bell {Fitted when specially required.
T Bell Fittings.
U Bridle Mooring Eyes.

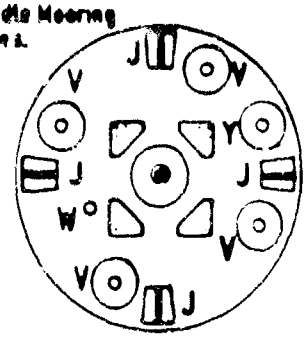

FIG. 2. PLAN OF BUOY BODY

V Acetylene Cylinder Pockets each carrying 1-A 130 Cylinder
W Acetylene Back Valve.
J Lifting Eyes.
Y Manhole.

1. The whistle [E] is operated by air forced up the tube by the motion of the buoy.
2. The Anti-Fouling Chain [O] swings freely inside the tube preventing settlement of Marine Growth.
3. Mooring Details have been omitted for clarity and will be found under Buoy Moorings.

Tail Tube length	12'-8"	3657 mm
Body	10'-4"	3150 mm
Lamp Trestle	13'-10"	4216 mm
Lamp	2'-10"	864 mm
Overall Length	35'-8"	11087 mm

WEIGHT WHEN COMPLETE 9 TONS. 9144kg.

CARDINAL CLASS I BUOY

WITH 375 mm DALEN LIGHT, LIHA 600 ELECTRIC FOG SIGNAL, WAVE ACTUATED BELL OR WHISTLE

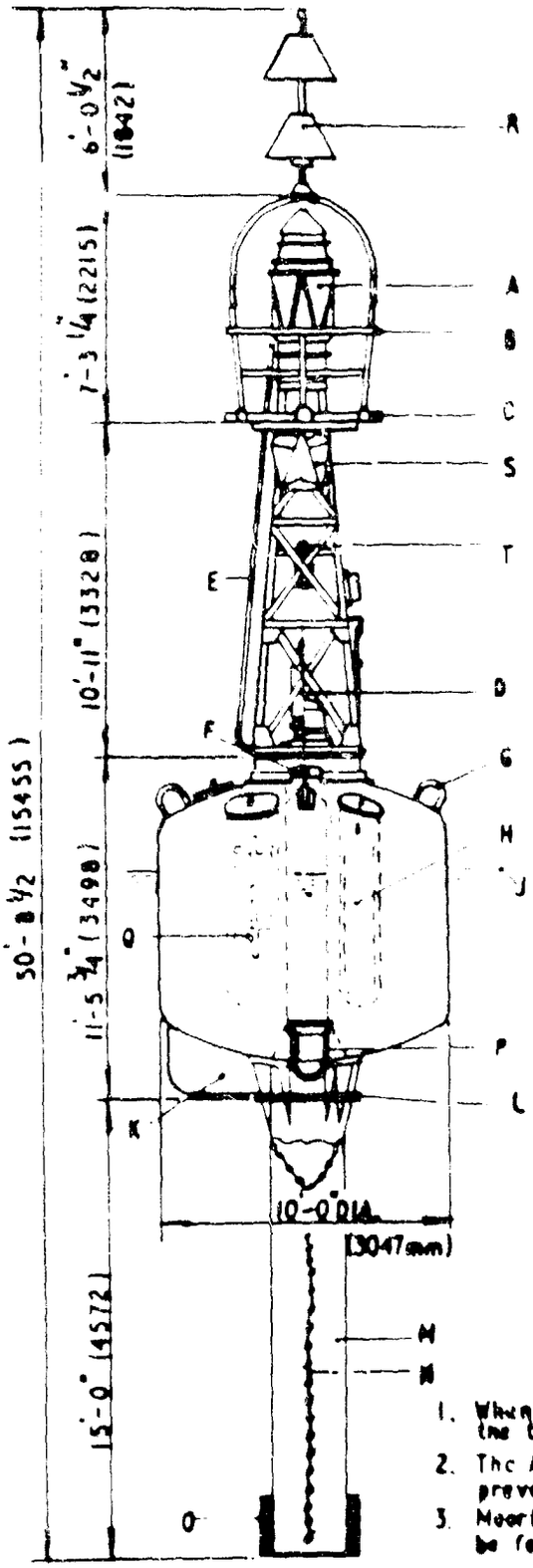

FIG. 1 ELEVATION OF BUOY

A Lantern 375mm.
B Gallery Rail
C Gallery
D Air Whistle or Wave Actuated Bell.
E Ladder
F Air Tube
G Lifting Eyes
H Acetylene Cylinders (2 No)
J Water Line
K Plate Rudder
L Tail Tube Connection
M Tail Tube
N Anti Fouling Chain
O Ballast Weight
P Bridle Mooring Eyes
Q Electric Battery Pockets (2 No.)
R Topmark
S Radar Reflector
T AGA LIHA 600 Fog Signal

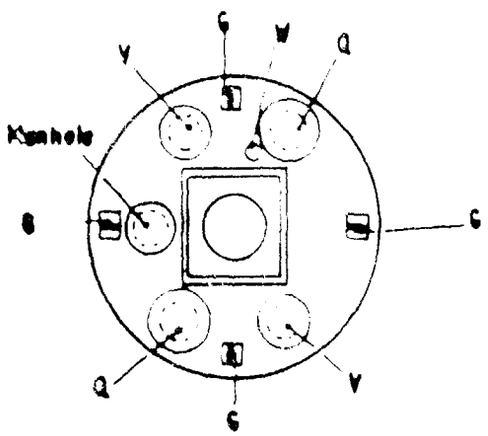

FIG. 2 PLAN OF BUOY BODY

G LIFTING Eyes
V Acetylene Cylinder Pockets each carrying 1-A130 Cylinder
W Deck Valve Acetylene
Q Electric Battery Pockets

1. When fitted the whistle [D] is operated by air forced up the tube by the motion of the buoy.
2. The Anti Fouling Chain [N] swings freely inside the tube preventing settlement of Marine Growth.
3. Mooring Details have been omitted for clarity and will be found under Buoy Moorings.

FIG. 1

Tail Tube Length	15'-0"	4572 mm
Body	11'-5 3/4"	3498 mm
Lamp Trestle	10'-11"	3328 mm
Gallery	7'-3 1/4"	2215 mm
Topmark	6'-0 1/2"	1842 mm
Overall Length	50'-8 1/2"	15455 mm

WEIGHT WHEN COMPLETE 10 Tons 6 cwts (10465 kg)

CARDINAL CLASS I BUOY

ACETYLENE GAS BUOY WITH LIGHT WHISTLE AND WAVE ACTUATED BELL OR LIHA 600 ELECTRIC FOG SIGNAL

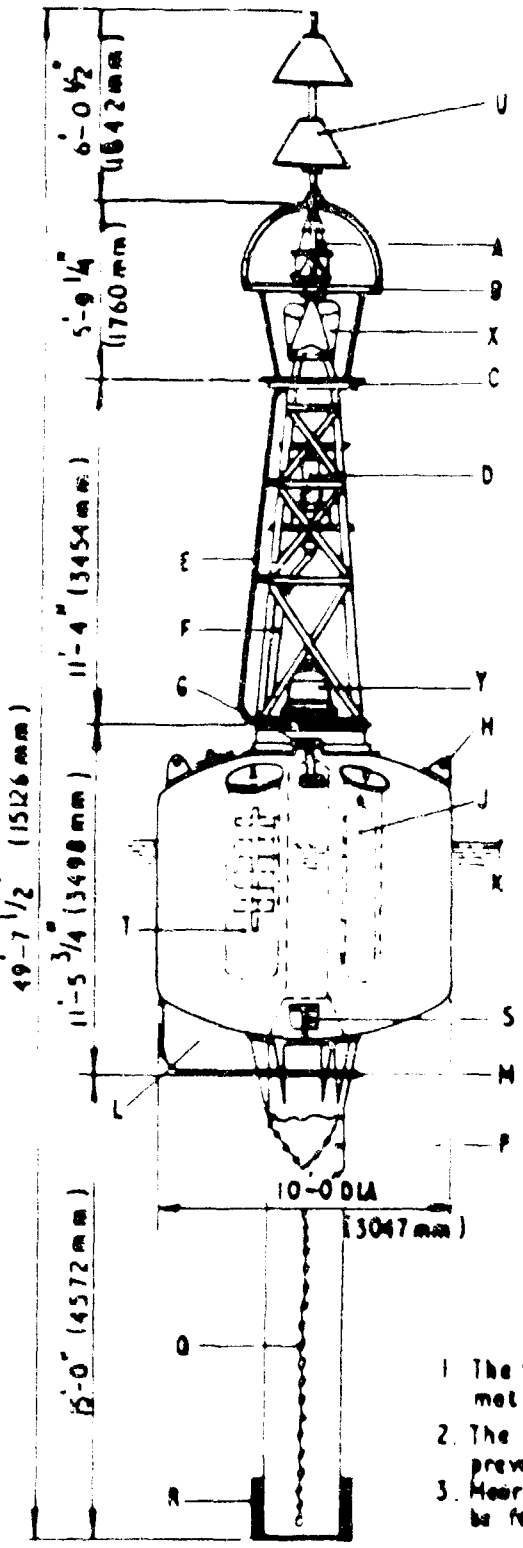

FIG. 1 ELEVATION OF BUOY

A Lantern 200mm
B Gallery No. 1
C Gallery
D Air Whistle or AGA LIHA 600 Fog Signal
E Ladder
F Air Whistle Pipe
G Air Tube
H Lifting Eyes
J Acetylene Cylinders [2 No.]
K Water Line
L Plate Rudder
M Tail Tube Connection
P Tail Tube
Q Anti Fouling Chain
R Ballast Weight
S Bridle Mooring Eyes
T Electric Battery Pockets [2 No.]
U. Topmark
X Radar Reflector
Y Wave Actuated Bell

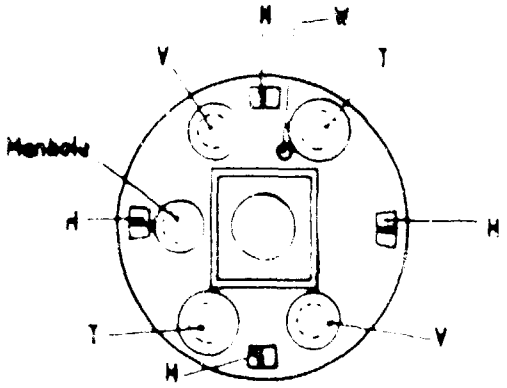

FIG. 2 PLAN OF BUOY BODY

H. Lifting Eyes

V. Acetylene Cylinder Pockets each carrying 1-A130 Cylinder

W. Dock Valve Acetylene

T. Electric Battery Pockets

1. The whistle [D] is operated by air forced up the tube by the motion of the buoy.
2. The Anti Fouling Chain [Q] swings freely inside the tube preventing settlement of Marine Growth
3. Mooring Details have been omitted for clarity and will be found under buoy Moorings.

FIG 1

Tail Tube Length	15'-0"	4572 mm
Body	11'-5¾"	3498 mm
Lamp Trestle	11'-4"	3454 mm
Gallery	5'-9¼"	1760 mm
Topmark	6'-0½"	1842 mm
Overall Length	49'-7½"	15126 mm

WEIGHT WHEN COMPLETE 10 Tons (10160 kg.)

SHORT PILLAR LIGHTED ACETYLENE GAS BUOY

ALTERNATELY CAN BE FITTED OUT AS CARDINAL CLASS II BUOY WITH (a) RADAR REFLECTOR AND TOPMARK / (b) LANTERN AND TOPMARK

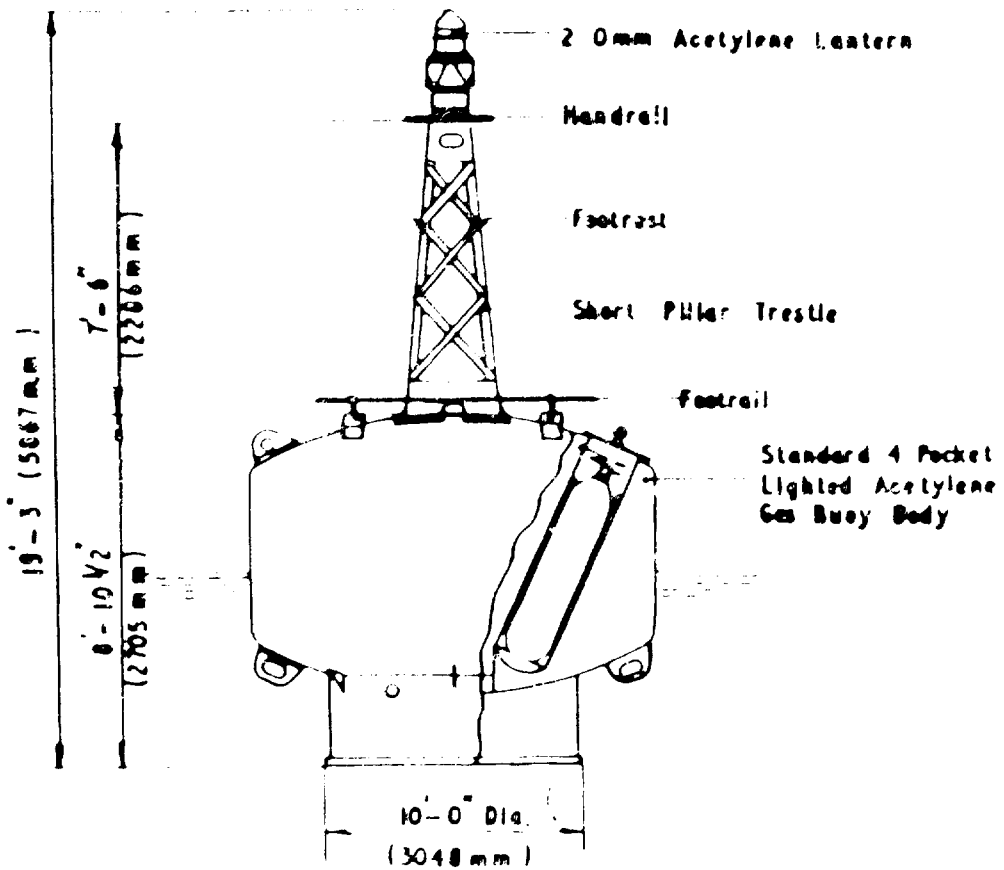

WEIGHT APPROX: 5 Tons 1cwt. (5131 kg.)

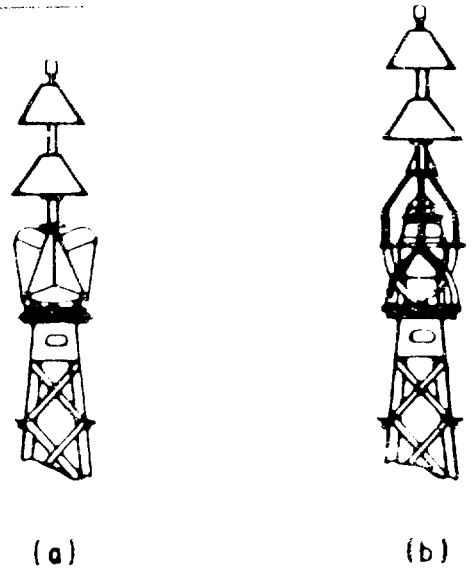

ALTERNATIVE FORMS

CARDINAL CLASS II PILLAR BUOY MK 1. (CAN BE FITTED WITH W/A BELL IF REQUIRED)

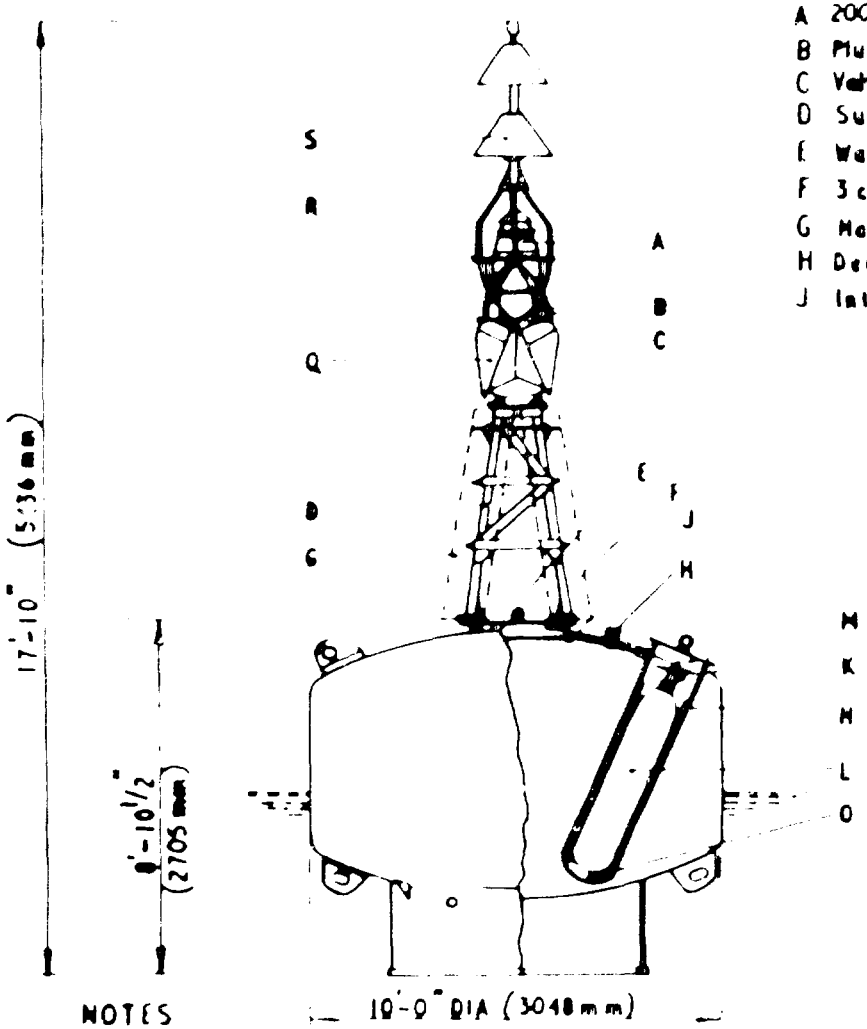

A 200MM Lantern
B Plug for pressure gauge
C Valve
D Superstructure
E Wave actuated bell unit } fitted when required
F 3 cwt (153 kg) bell }
G Homeboard
H Deck Valve
J Internal gas supply pipe
K Accumulator cell pipes
L AK 130 Acetylene accumulator
M Valve
N Timber wedges
O Timber seating pad
P Kurbelz cover
Q Radar reflector
R Topmark support
S Topmark

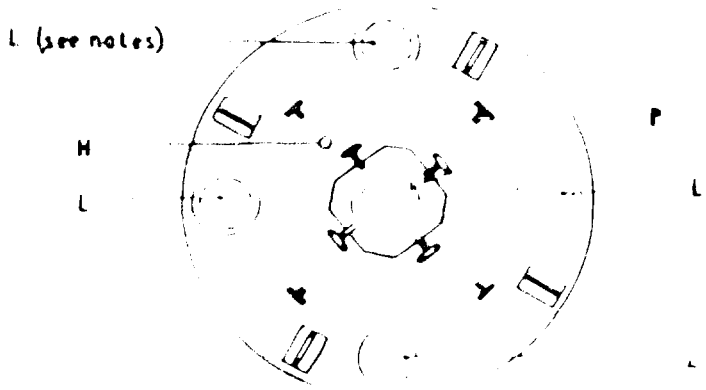

DECK PLAN

ITEM	WEIGHT Tons	Cwt	Lbs	kg
BUOY BODY (BARE)	4	5	121	4318
BELL UNIT		8	23	408
SUPERSTRUCTURE		1	3	52
TOPMARK			22	10
200mm LANTERN (C.H.)		1	26	53
AK 130 ACCUMULATOR (EACH)		5	6	257

NOTES

2 Acetylene accumulators provide a full years service for normal light characters ($\frac{1}{10}$) proportion

4 Acetylene accumulators may be fitted in the case of Quick Flashing characters

ENGLAND - 7

KEEL TYPE BUOY WITH ACETYLENE LIGHT AND AGA LIHA 600 ELECTRIC FOG SIGNAL

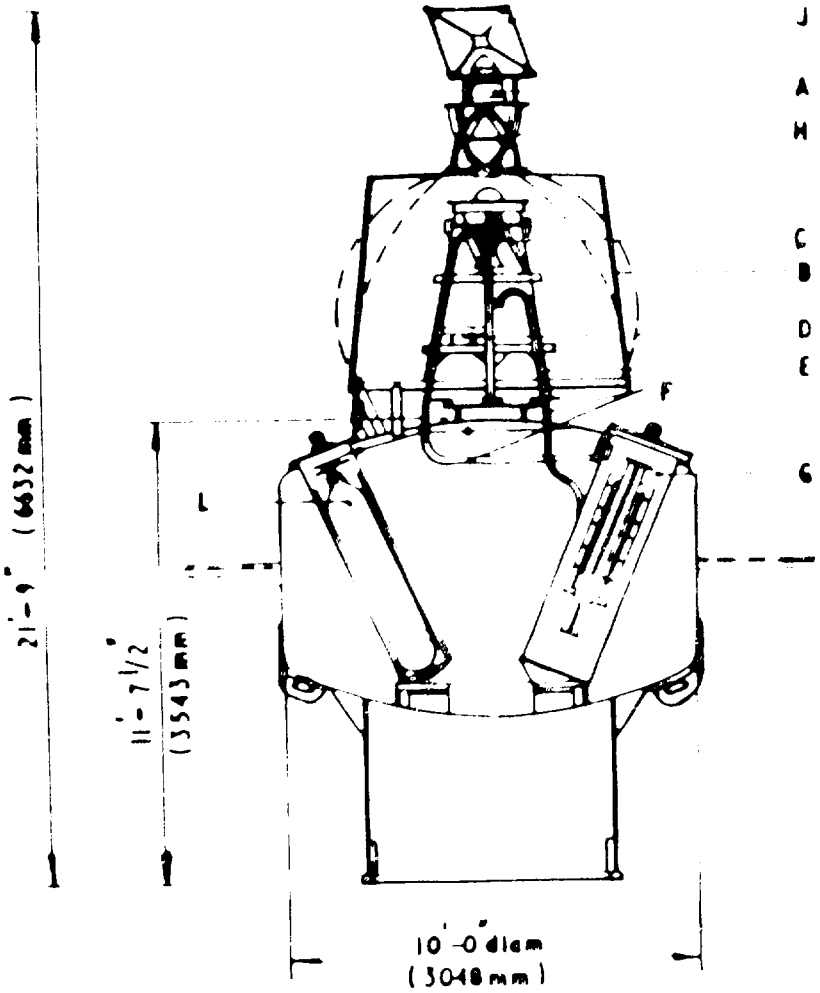

WEIGHT APPROX 7 Tons (7112 kg)

A	200mm Lantern
B	Cage type superstructures
C	AGA LIHA 600 Electric fog signal
D	Fog signal control box
E	Air vent & fog signal support trestle
F	Vent system battery pockets
G	Electric battery pockets (2 No)
H	Helical frame mounting
J	18" Octahedral radar reflector
K	Acetylene deck valve
L	AK130 acetylene accumulators (2 No)
M	Manhole cover
N	Baseplate

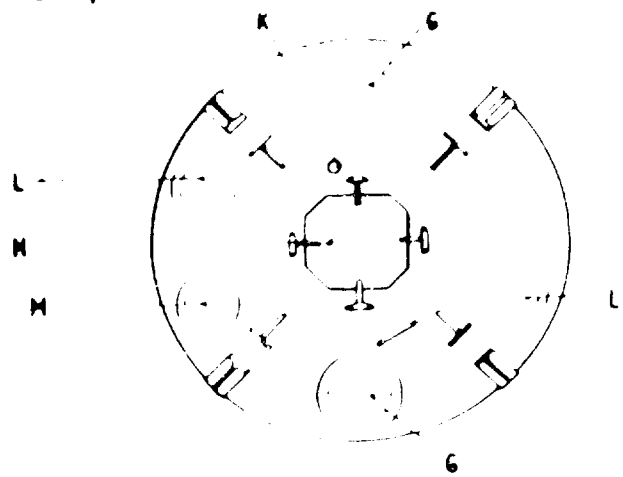

DECK PLAN

STANDARD 4 POCKET LIGHTED ACETYLENE GAS BUOY

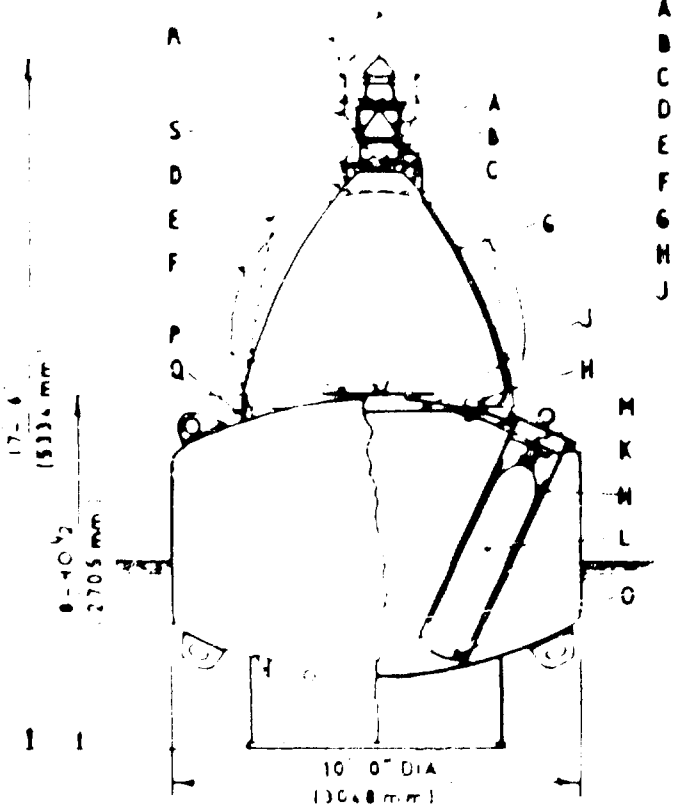

A 200 MM Lantern
B Plug for pressure gauge
C Valve
D Conical superstructure
E Can
F Spherical
G Gas supply pipe to Lantern
H Deck Valve
J Internal gas supply pipes
K Accumulator Coil Pipes
L AK 130 Acetylene Accumulator
M Valve
N Timber Wedges
O Timber seating pad
P Manhole Cover
Q Lugs for Cage Type superstructure
R Radar Reflector } Fitted when required
S Hinged Helical Mounting } Fitted when required

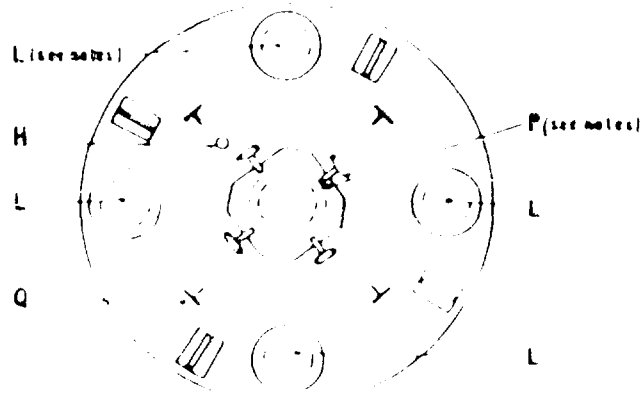

DECK PLAN

NOTES

2 Acetylene accumulators provide a full years service for normal light characters $\frac{1}{10}$ proportion

4 Acetylene accumulators may be fitted in the case of Quick Flashing characters

The Buoy body may be fitted with a special manhole cover / base plate for the attachment of a Trestle mounting for Botwing Daymarks and/or a Wave Actuated Bell Unit as alternatives to the standard Cage Type Daymark Superstructures (as shown above) and associated Bell fittings

ITEM	WEIGHT			
	Tons	Cwts	Lbs	kg
BUOY BODY (BARE)	4	5	-	4318
CAN SUPERSTRUCTURE		4	18	211
CONICAL		3	-	152
SPHERICAL		4		203
200 MM LANTERN		1	26	63
AK 130 ACCUMULATOR (EACH)		5	6	257

KEEL TYPE AUTOMATIC CO_2 BELL BUOY WITH ACETYLENE LIGHT

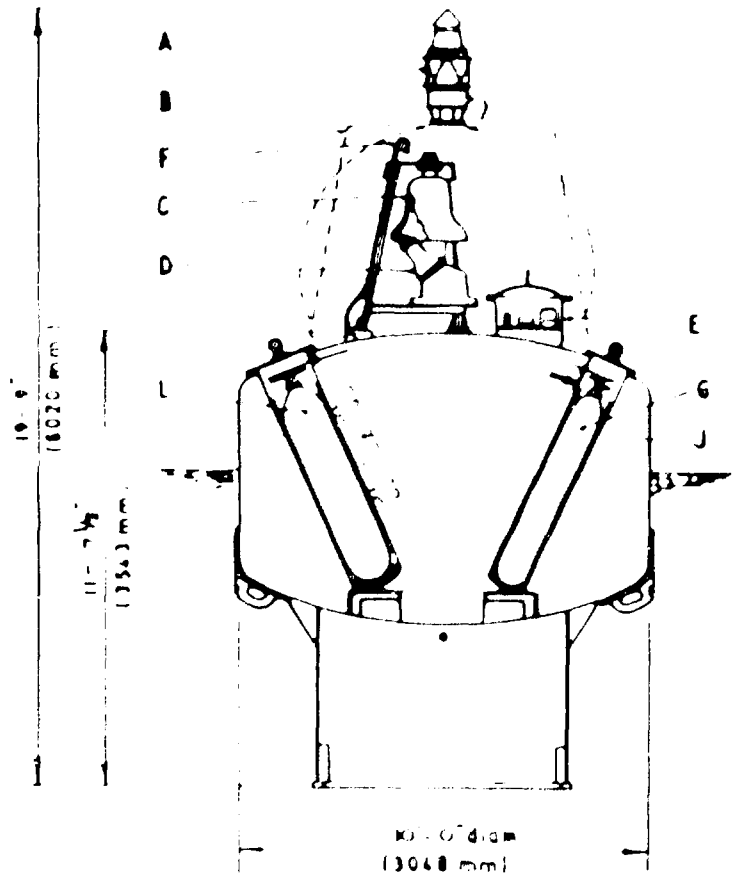

A 200 mm Lantern
B Cage type superstructures
C 3½ cwts Bell (trestle mounted)
D Bell striking mechanism
E Housing for Bell control mechanism
F Vent system to CO_2 Cylinder pockets
G CC 50, CO_2 Cylinders (4 No)
H Deck connection for emergency CO_2 Cylinder
J CO_2 gas drier
K Acetylene deck valve
L AX 130 acetylene accumulators (2 No)
M Manhole cover

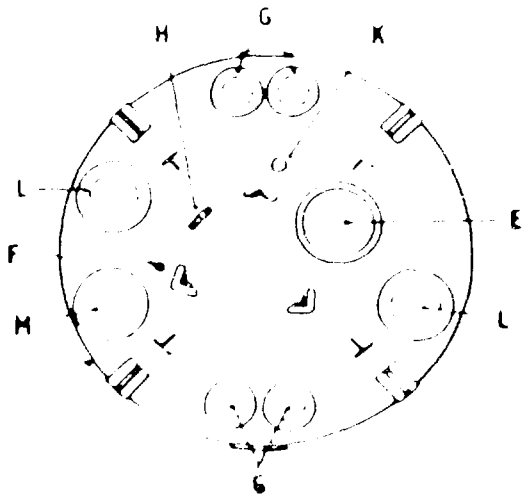

DECK PLAN

WEIGHT APPROX 7 TONS 8 CWTS (7518 kg) (Ex moorings)

STANDARD GLASS REINFORCED PLASTIC (G.R.P.)
METRE LIGHTED BUOY

A 200 mm Lantern (Aluminium)
B Can Cage Type Superstructure (G.R.P.)
C AL 21 Acetylene Accumulators (9 No.)
D Lifting Eyes
E Mooring Eyes
F Acetylene Deck Valve
G Buoy Body (G.R.P.)
H 350 mm (14") Octahedral Radar Reflector
J Radar Reflector Mounting
K Apron Keel (G.R.P.)
L Rubber Fender
M Guide Rope Eyebolts
N Handrail

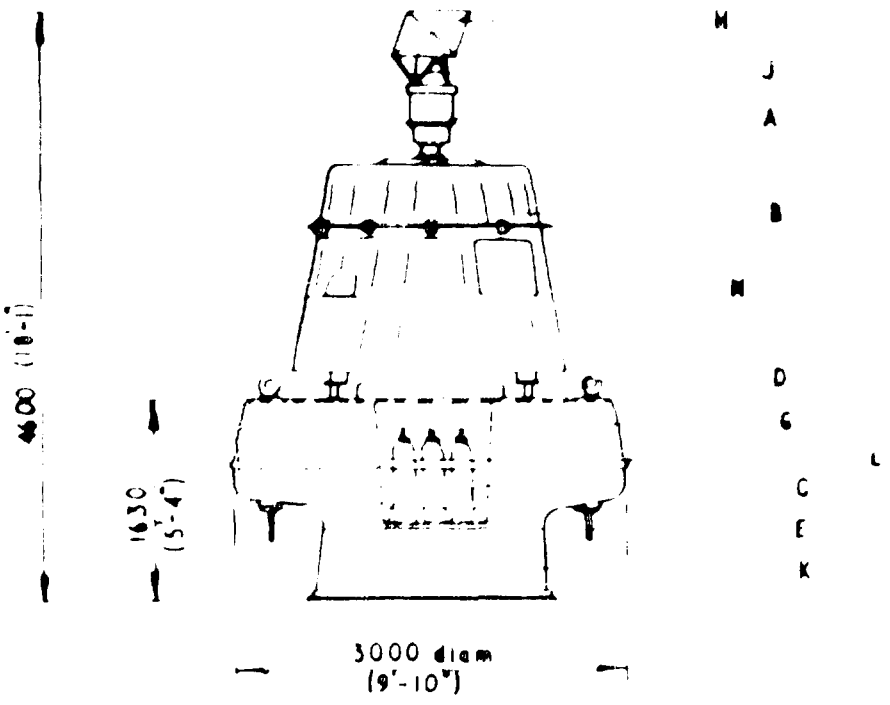

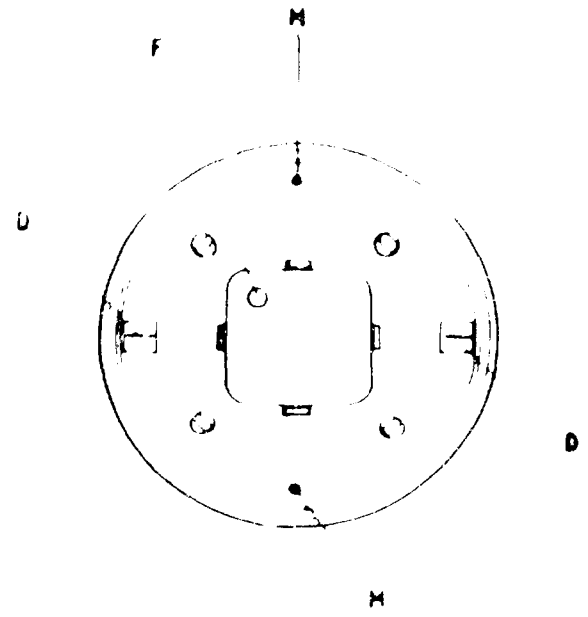

DECK PLAN

9'-0" DIA. GENERAL PURPOSE UNLIGHTED BUOY

FOR USE WITH STANDARD LIGHTED BUOY TYPE CAGE OR BATWING DAYMARKS
/ WAVE ACTUATED BELL / RADAR REFLECTOR

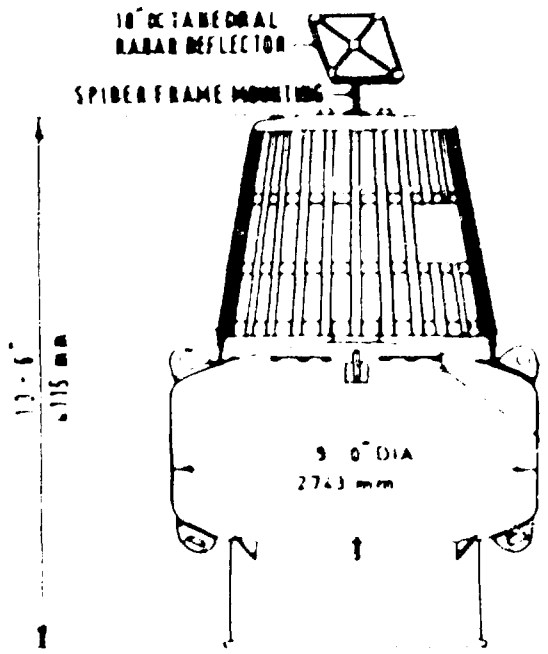

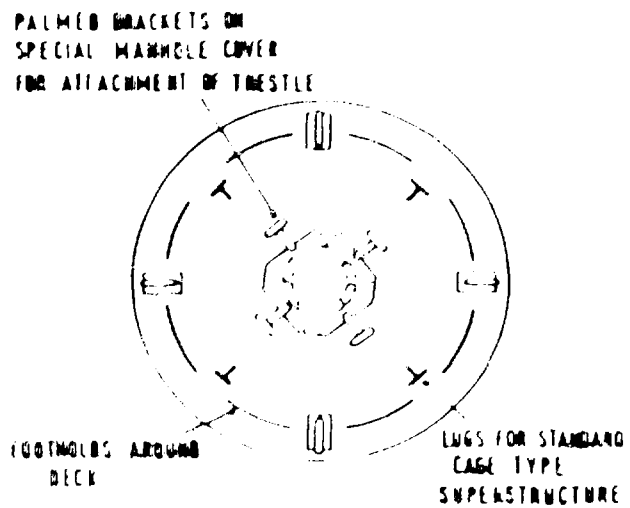

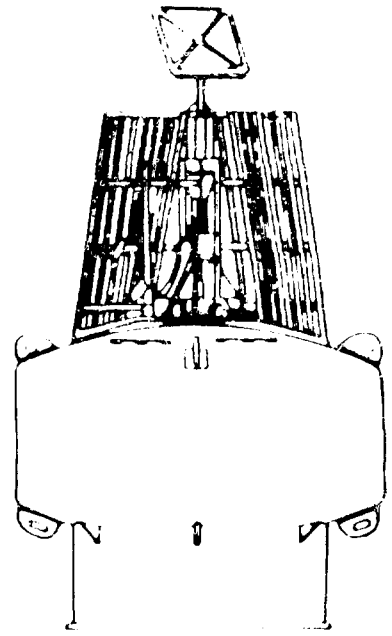

CAGE TYPE DAYMARK

When required for a wave actuated bell station these superstructures are fitted with bell hammers and the bell is mounted on a stand which is bolted direct to the manhole cover

BATWING TYPE DAYMARK

When required for a bell station a wave actuated bell unit can be bolted direct to the manhole cover

APPROX WEIGHT 3 TONS 3 CWTS 3200 Kg

SMALL ELECTRIC LIGHTED BUOY

"BURY" TYPE

ALTERNATIVE TYPE OF LANTERN

WALLACE & TERRAN

F.A. 249 LANTERN (155 MM)

5 LBS (2.27 Kg)

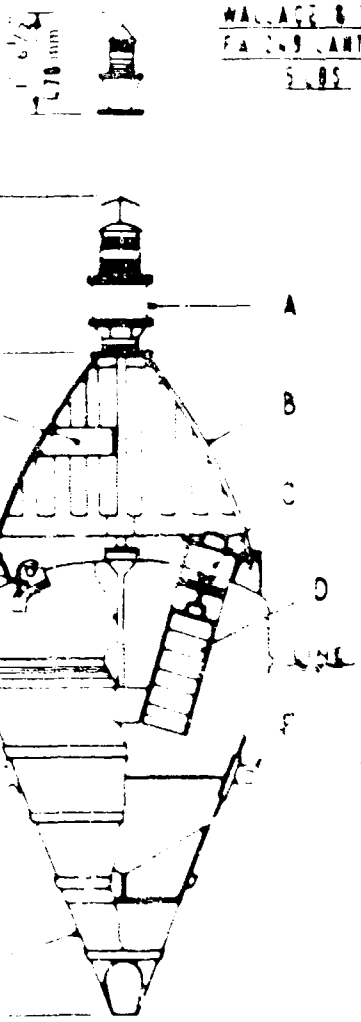

FIG. 1

FIG 1 ELEVATION OF BUOY

A Stone Chance 2F 25 LANTERN (200 MM)
52 LBS 23.72 Kg

B Wing Daymark Superstructure (Conical, Can, or Spherical)

C Battery Pockets, 2 No

D Battery Packs (90 lbs each)

E Lifting Eyes 2 No

F Mooring Eyes

G Cast Iron Ballast Weights with Chisel Point

NOTE When Required, this Buoy can be fitted with single or bridle mooring eyes. A recessed superstructure is provided to protect the lantern where a Buoy ground at low tide.

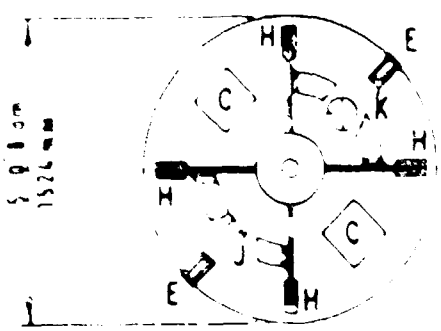

FIG 2

FIG. 2 PLAN OF BUOY BODY

H Superstructure Brackets 4 No

J Name Plate & Buoy Registration Number

K Inspection Filler Hole & Cover

TOTAL WEIGHT OF COMPLETE ASSEMBLY EXCLUDING MOORINGS APPROX [illegible] CWTS [illegible] Kg

FIBRE GLASS BUOY

MOTIVATORS TYPE GLASS Y CONICAL

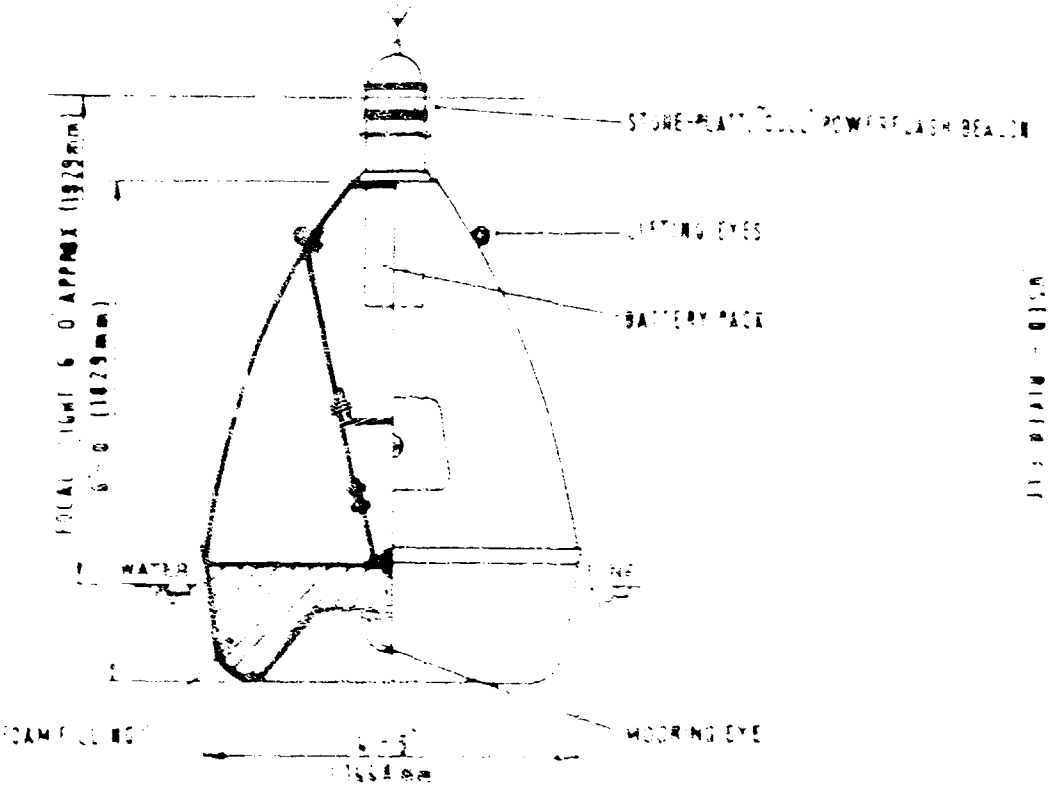

PROFILE OF BUOY BODY

WEIGHT APPROX 470lbs (181kg)

STANDARD UNLIGHTED BUOYS

CAN

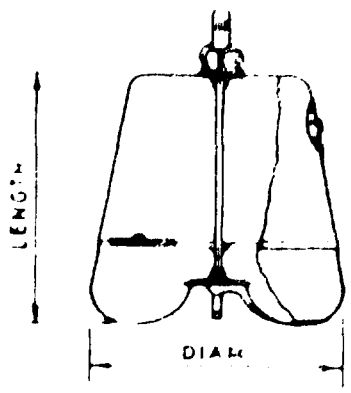

SPHERICAL

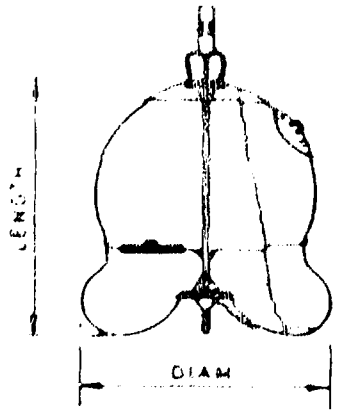

CONICAL

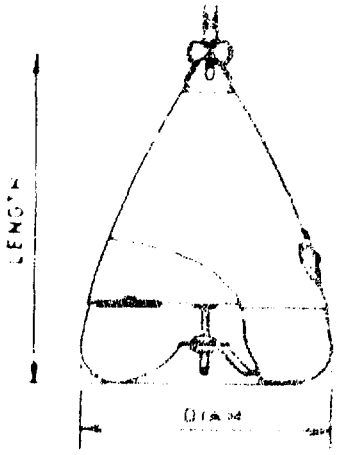

CLASS	CAN					SPHERICAL					CONICAL				
	LENGTH	DIA	WEIGHT			LENGTH	DIA	WEIGHT			LENGTH	DIA	WEIGHT		
			Tons	Cwts	Kg			Tons	Cwts	Kg			Tons	Cwts	Kg
1 ST	12' 8" 3860mm	12' 0" 3658 mm	3	18	3962	12' 8" 3860 mm	12' 0" 3658 mm	3	13	3708	16' 4" 4978mm	12' 0" 3658mm	3	18	3962
2 ND	10' 6" 3200mm	10' 0" 3048 mm	2	17	2896	10' 6" 3200mm	10' 0" 3048mm	2	14	2743	13' 6" 4115 mm	10' 0" 3048mm	2	16	2845
3 RD	8' 6" 2591mm	8' 0" 2438 mm	1	16	1829	8' 6" 2591 mm	8' 0" 2438 mm	1	14	1727	10' 10" 3302 mm	8' 0" 2438mm	1	15	1788
4 TH	6' 4" 1930 mm	6' 0" 1829 mm	1	1	1067	6' 4" 1930 mm	6' 0" 1829 mm	1	1	1067	8' 2" 2489mm	6' 0" 1829 mm	1	1	1067
5 TH	5' 3" 1600 mm	5' 0" 1524 mm	-	16	813	5' 3" 1600 mm	5' 0" 1524 mm	-	15	762	6' 9" 2057mm	5' 0" 1524mm	-	16	813

STANDARD UNLIGHTED BUOYS

SMALL TYPES

(1)

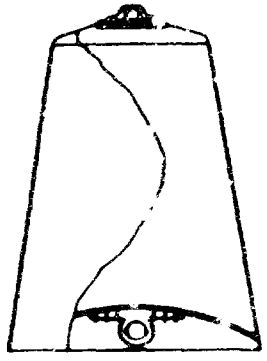

LIGHTVESSEL
WATCH BUOY

(2)

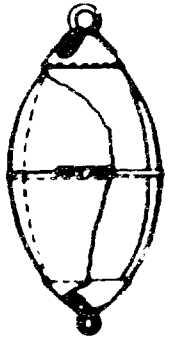

WRECK/NUN BUOY
(RIVER EXE)

(3)

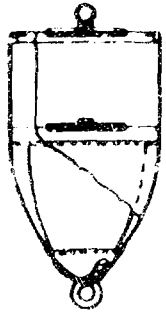

SPECIAL CAN BUOY
(RIVER EXE)

(4)

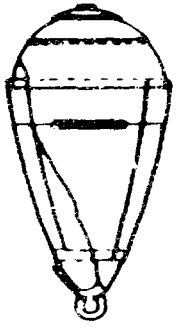

SPHERICAL TOP BUOY
(RIVER EXE)

(5)

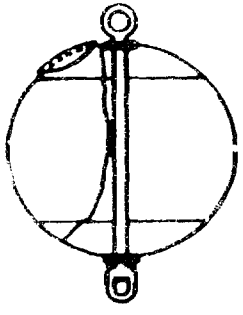

SPHERICAL
(MOORING BUOY)

Fig. No.	LENGTH	DIA.	WEIGHT		
			Cwts	Qrs.	Kg
1	8'-3" 2515mm	6'-0" 1829mm	14	2	737
2	7'-2" 2184mm	3'-8" 1118mm	5	2	279
3	6'-4" 1930mm	3'-9" 1143mm	7	3	394
4	7'-6" 2286mm	3'-9" 1143mm	7	1	368
5	5'-6" 1676mm	5'-6" 1676mm	10	–	508

BALMORAL GROUP

An Introduction

The Balmoral Group Ltd. are a Scottish company with their headquarters in Aberdeen, and are one of the fastest growing enterprises in the U.K. In ten years, the company have flourished and diversified, and now comprise fifteen trading divisions and three overseas associates in the United States, Holland and Norway. All of the companies within the Group have a high technology base which is a feature of the oil and oceanographic industries today.

Balmoral are an acknowledged force in the field of plastics technology. The company manufacture and supply a variety of structures based upon an extensive range of plastic composite and micro-cellular materials, developed from long term experience of fabrication.

Fire trials on Balmoral 8m lifeboat

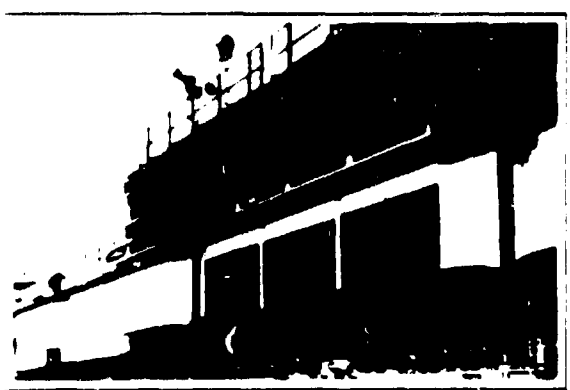

GRP enclosures for Edinburgh Military Tattoo

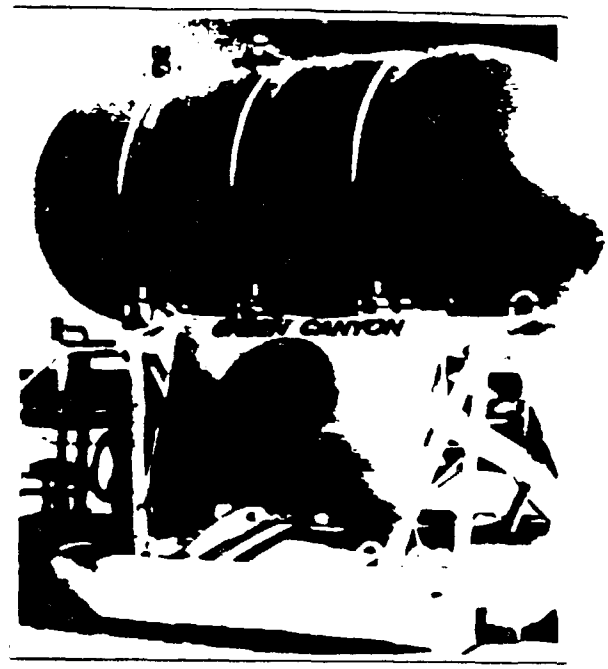

Syntactic buoyancy module

The scope of Balmoral's interests in plastic materials, processing technology and end applications has benefited many varied markets, from chemical plant to wind generator housings; totally enclosed survival craft to fish farm equipment; clean air ducting and pipework to refurbishment work on oil platforms; architectural cladding panels and restoration work to fishing floats; modular building systems to cryogenic pipeline insulation; plastic light towers including ladders, handrails and gratings to navigation buoys, and sectional and one piece storage tanks designed to BS 4994.

The company's ability to handle such a diverse range of products has been developed over many years, and these efforts were recognised early in 1990, when the Balmoral Group Ltd were audited successfully to BS 5750 Pt 2 1987/ISO 9002 1987 by the British Standards Institute - a significant achievement for a company the size and complexity of Balmoral to pass first time.

EF120L
MARKER BUOY

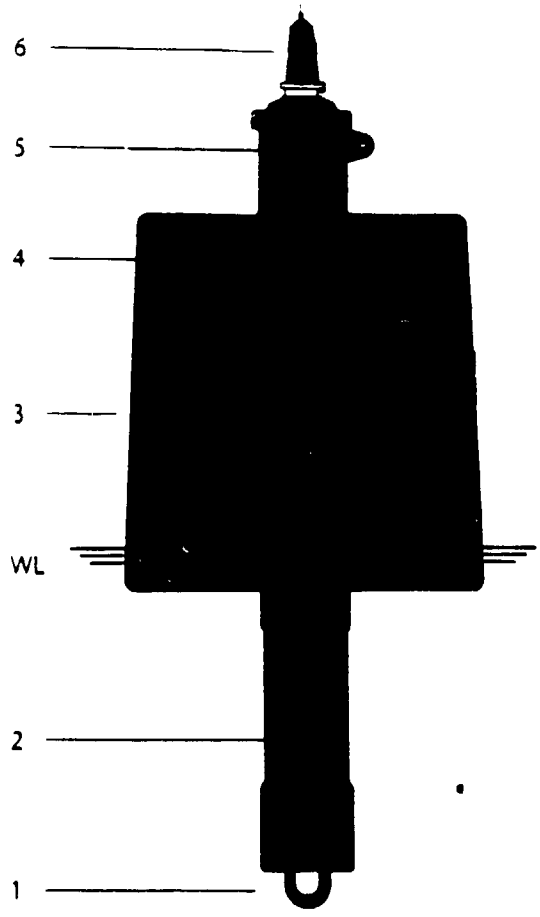

1 Single mooring eye
2 Balmoral DB3 battery
3 Can daymark
4 Conical daymark
5 Single lifting eye
6 Balmoral B85 beacon
WL Waterline

EF15L
CLASS V BUOY

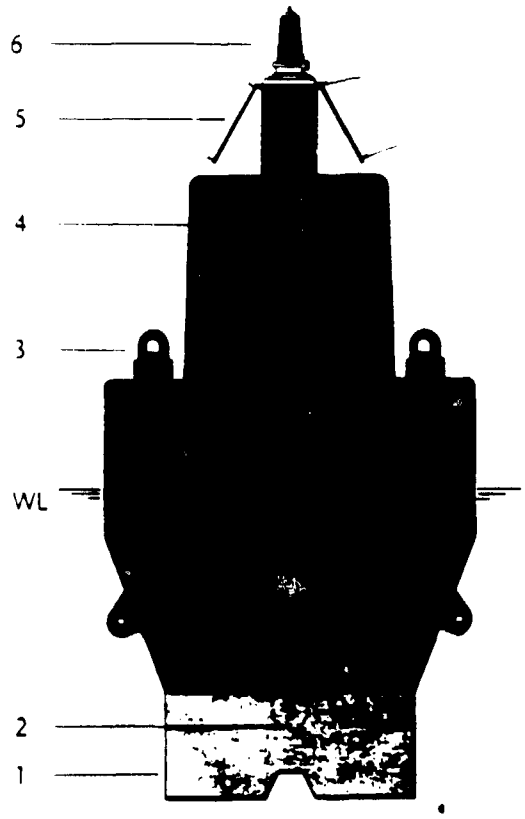

1 Ballast skirt
2 Single or bridle mooring eyes
3 Lifting eyes - 2 in number
4 Radar reflector
5 Balmoral solargen pack
6 Balmoral B85 beacon
WL Waterline

EF15P
CLASS V BUOY

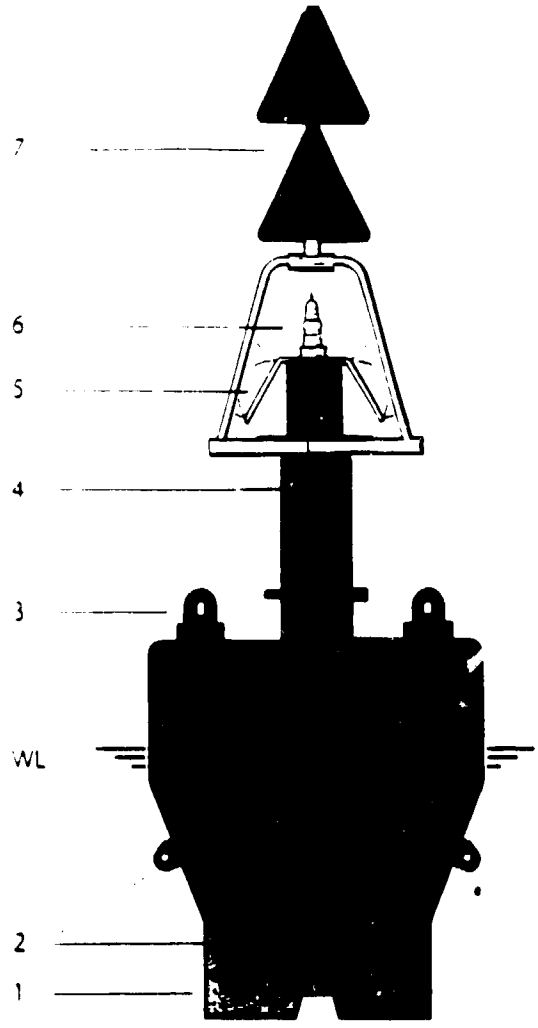

1 Ballast skirt
2 Single or bridle mooring eyes
3 Lifting eyes 2 in number
4 Radar reflector (within pillar)
5 Balmoral solargen pack
6 Balmoral B85 beacon
7 Top marks to suit relevant IALA recommendations
WL Waterline

ENGLAND MFG.- 1-4

EF18L
CLASS IV BUOY

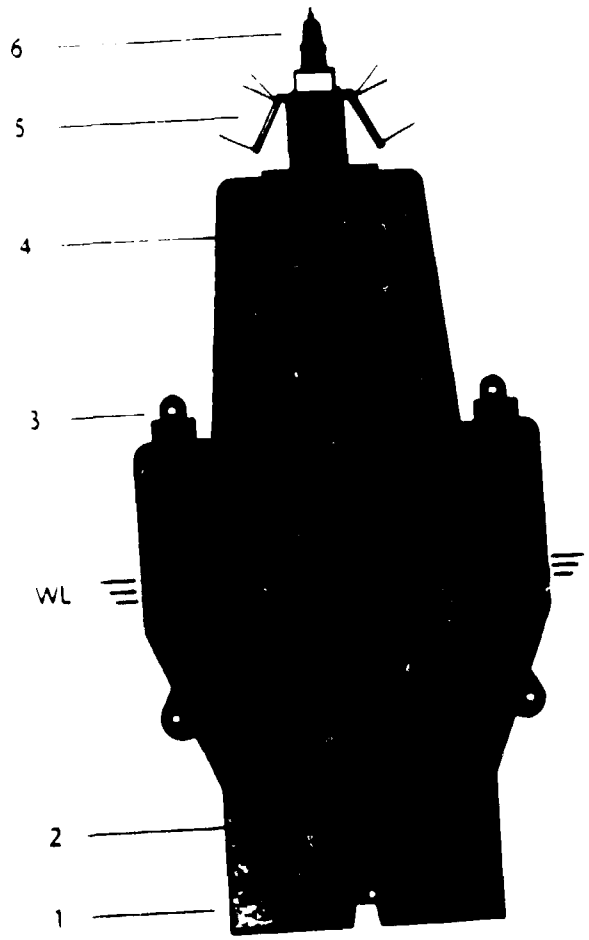

1 Ballast skirt
2 Single or bridle mooring eyes
3 Lifting eyes - 2 in number
4 Radar reflector
5 Balmoral solargen pack
6 Balmoral B85 beacon
WL Waterline

ENGLAND MFG. - 1-5

E. 18F
CLASS IV BUOY

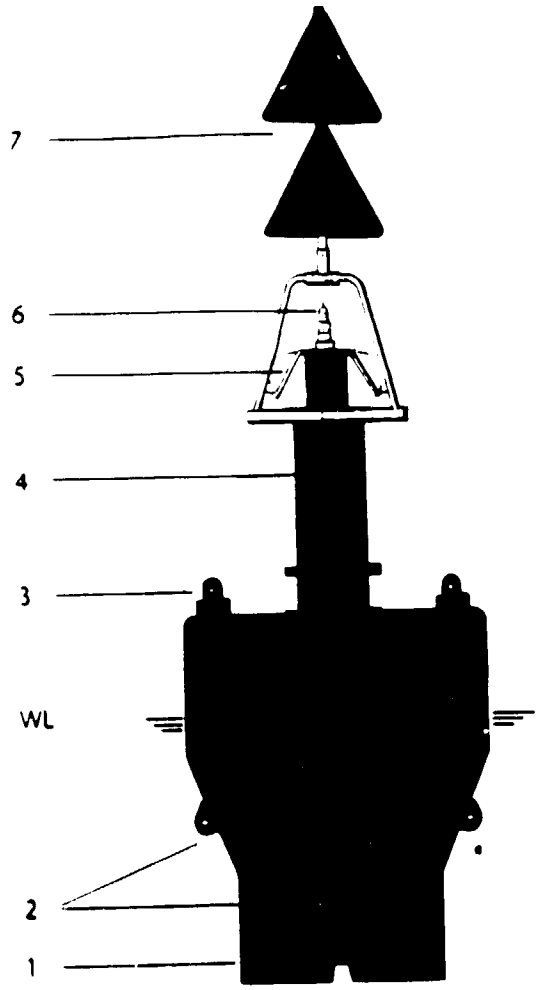

1 Ballast skirt
2 Single or bridle mooring eyes
3 Lifting eyes - 2 in number
4 Radar reflector (within pillar)
5 Balmoral solargen pack
6 Balmoral B85 beacon
7 Top marks to suit relevant IALA recommendations
WL Waterline

ENGLAND MFG. - 1-6

EF20L

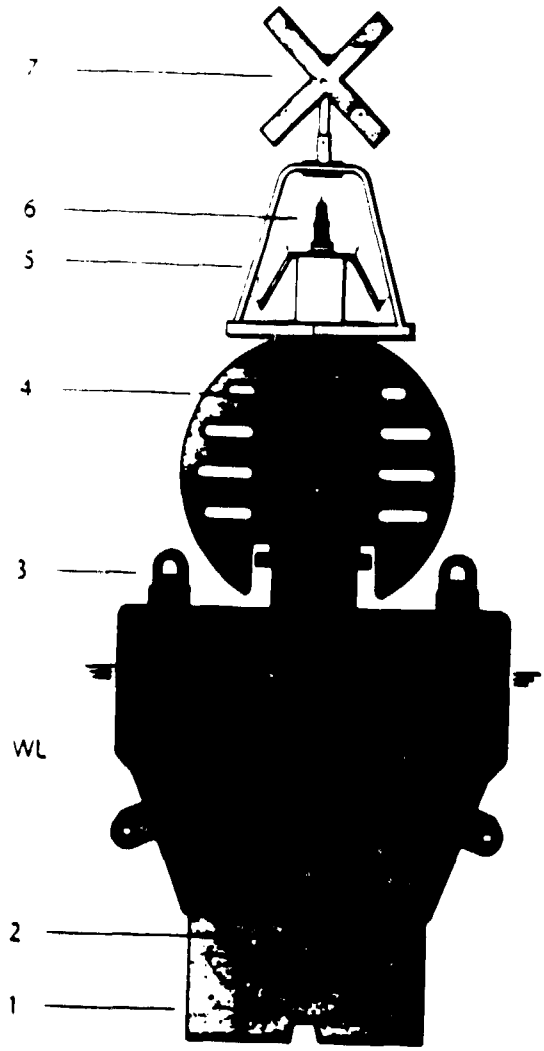

1 Ballast skirt
2 Single or bridle mooring eyes
3 Lifting eyes - 2 in number
4 Radar reflector
5 Balmoral solargen pack
6 Balmoral B&S beacon
7 Top marks if applicable
WL Waterline

EF20P

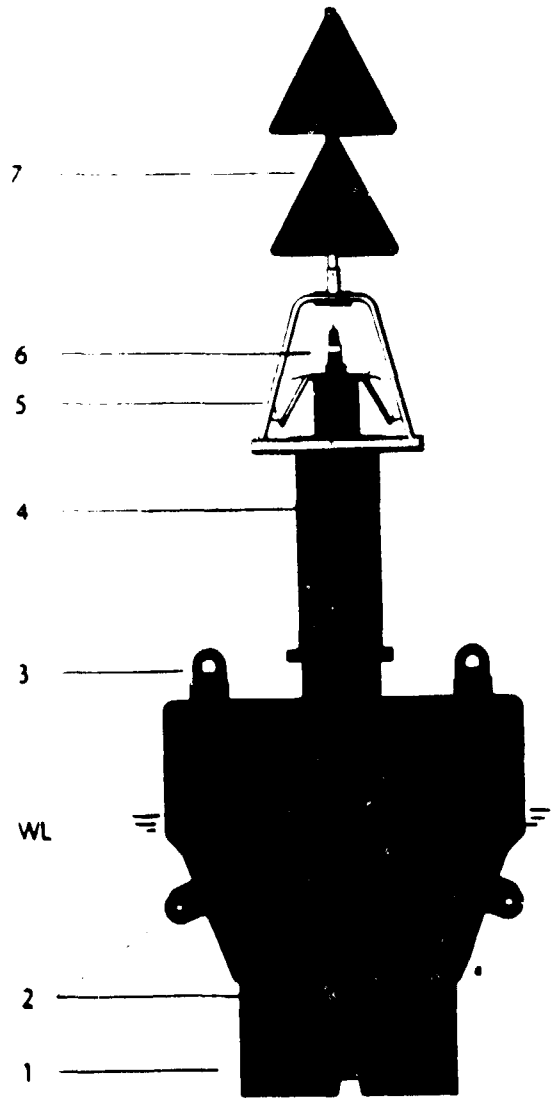

1 Ballast skirt
2 Single or bridle mooring eyes
3 Lifting eyes - 2 in number
4 Radar reflector (within pillar)
5 Balmoral solargen pack
6 Balmoral B&S beacon
7 Top marks to suit IALA requirements
WL Waterline

EF25L
CLASS III BUOY

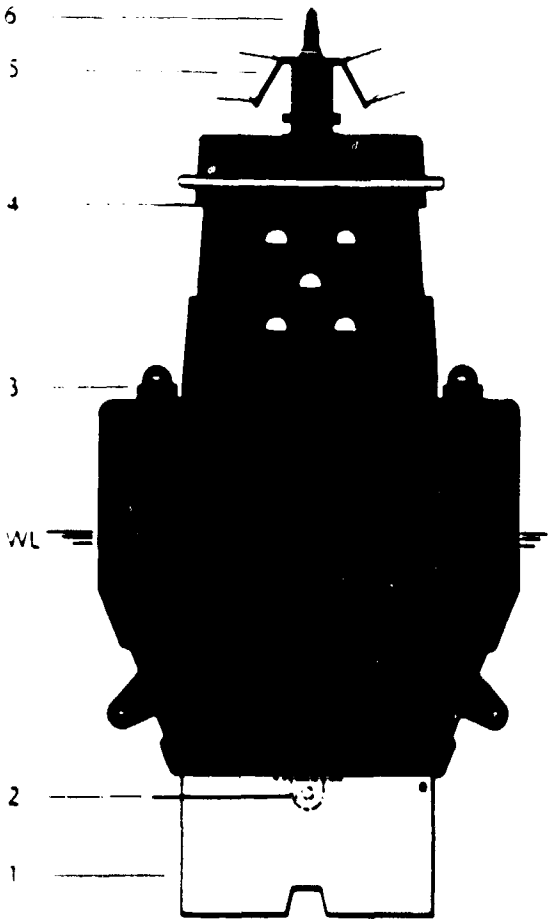

1 Ballast skirt
2 Single or bridle mooring eyes
3 Lifting eyes - 2 in number
4 Radar reflector
5 Balmoral solargen pack
6 Balmoral BBS beacon
WL Waterline

EF25P
CLASS III BUOY

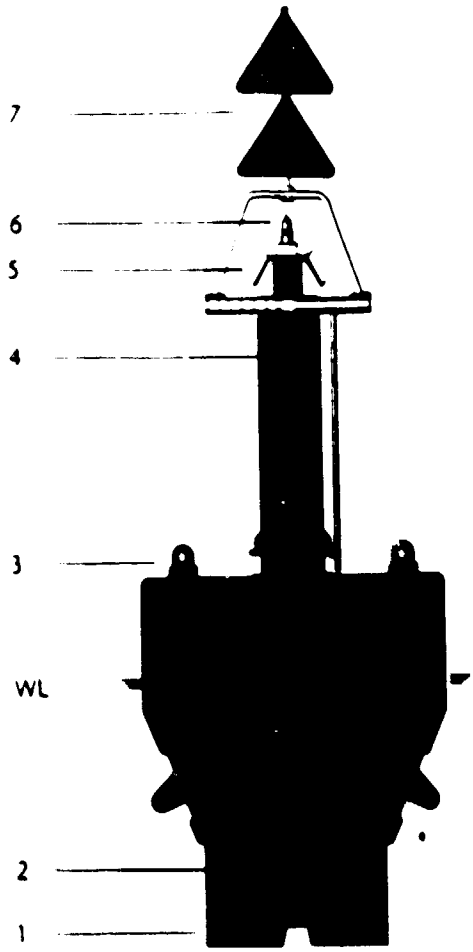

1 Ballast skirt
2 Single or bridle mooring eyes
3 Lifting eyes - 2 in number
4 Radar reflector (within pillar)
5 Balmoral Solargen pack
6 Balmoral B85 beacon
7 Top marks to suit relevant IALA recommendations
WL Waterline

ENGLAND MFG. - 1-10

EF L
CLASS II BUOY

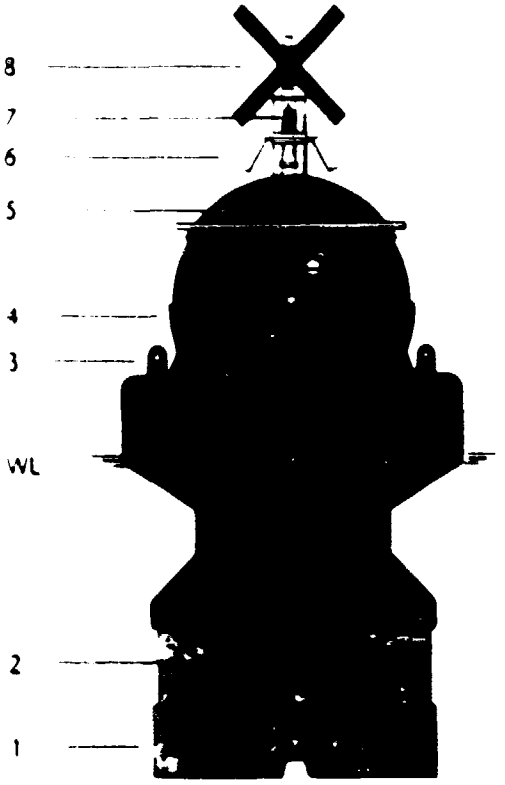

1 Ballast skirt
2 Single mooring eye
3 Lifting eyes - 2 in number
4 Rechargeable battery (within daymark)
5 Radar reflector
6 Solar panels
7 Balmoral B&S beacon
8 Topmarks if applicable
WL Waterline

EF JP
CLASS II BUOY

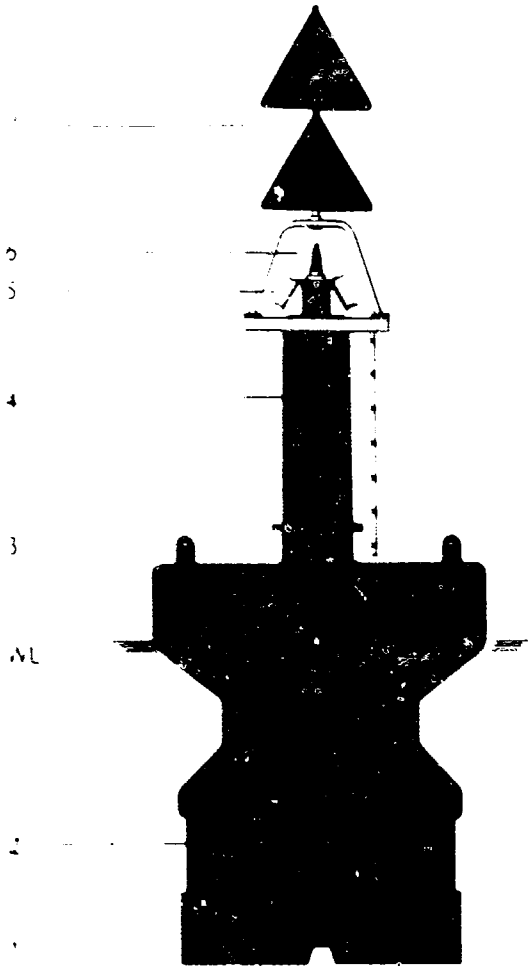

1 Ballast skirt
2 Single mooring eye
3 Lifting eyes - 2 in number
4 Radar reflector (within pillar)
5 Balmoral Solargen pack
6 Balmoral B85 beacon
7 Top marks to suit relevant IALA requirements
WL Waterline

EF36
CLASS I BUOY

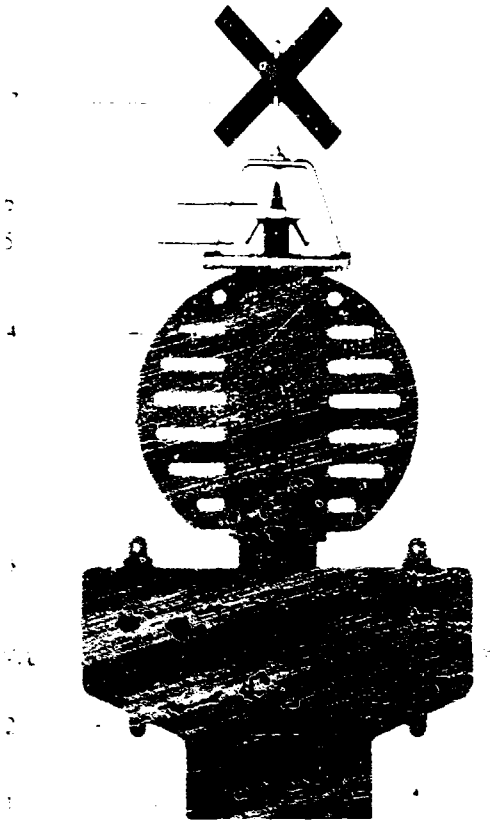

1 Ballast skirt
2 Bridle mooring eyes
3 Lifting eyes - 2 in number
4 Radar reflector
5 Balmoral Solargam pack
6 Balmoral B&S beacon
7 Topmarks if applicable
WL Waterline

EF 36P
CLASS I BUOY

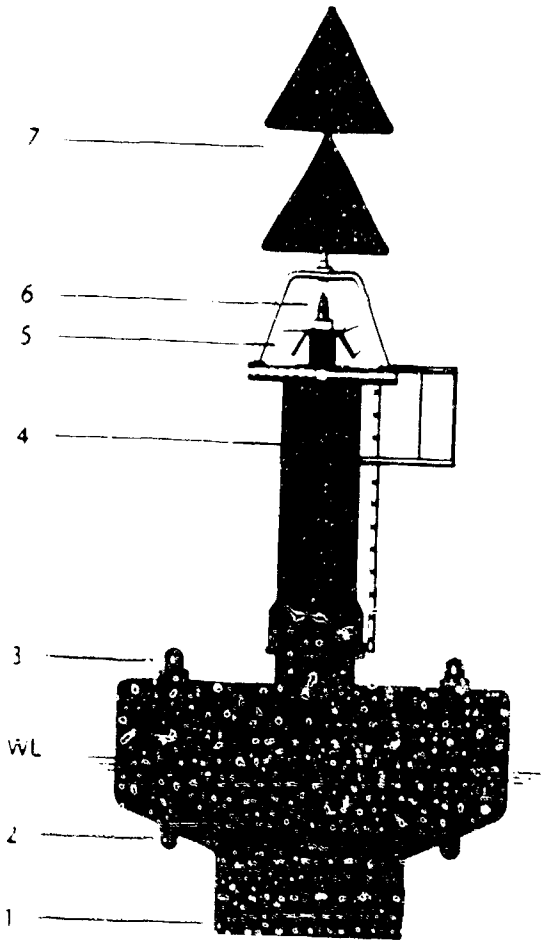

1 Ballast skirt
2 Bridle mooring eye
3 Lifting eyes - 2 in number
4 Radar reflector (within pillar)
5 Balmoral solargen pack
6 Balmoral B85 beacon
7 Top marks to suit relevant IALA recommendations
WL Waterline

950 SERIES MARKER BUOY

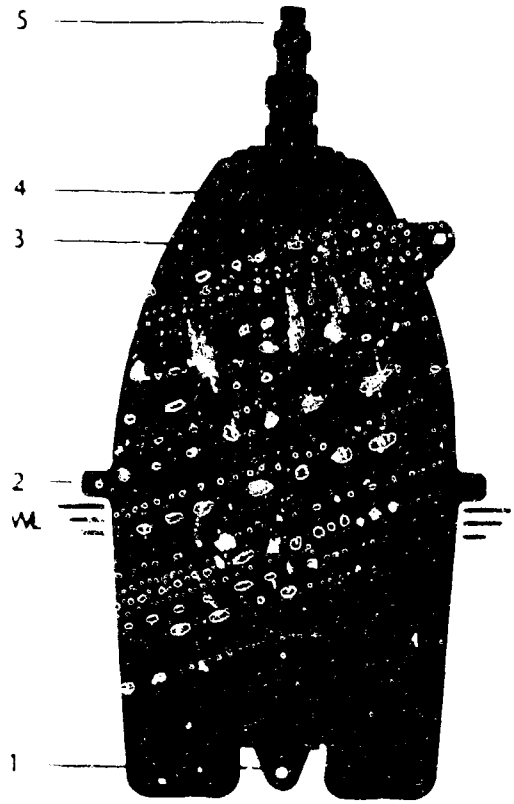

1 Single mooring eye
2 Rubber fender
3 Lifting eye - 1 in number
4 Balmoral PB1 battery
5 Balmoral B40 beacon
WL Waterline

L11

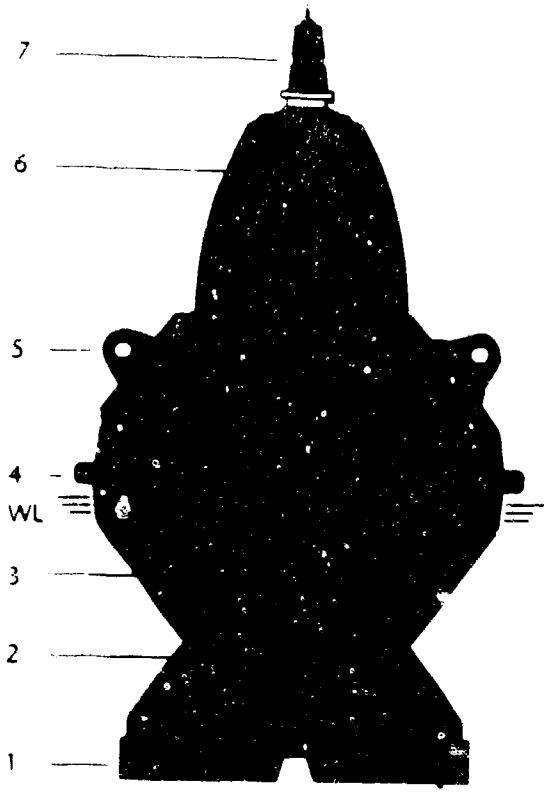

1 Ballast skirt
2 Single mooring eye
3 Balmoral DB4 battery
4 Rubber fender
5 Lifting eyes - 2 in number
6 Radar reflector
7 Balmoral BB5 beacon
WL Waterline

P11

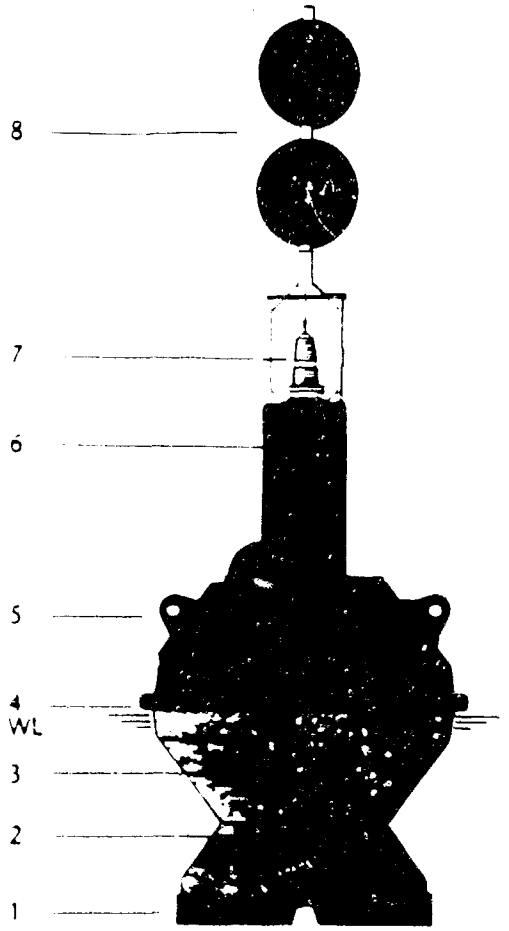

1 Ballast skirt
2 Single mooring eye
3 Balmoral DB4 battery
4 Rubber fender
5 Lifting eyes - 2 in number
6 Radar reflector (within pillar)
7 Balmoral B85 beacon
8 Topmarks
WL Waterline

L16

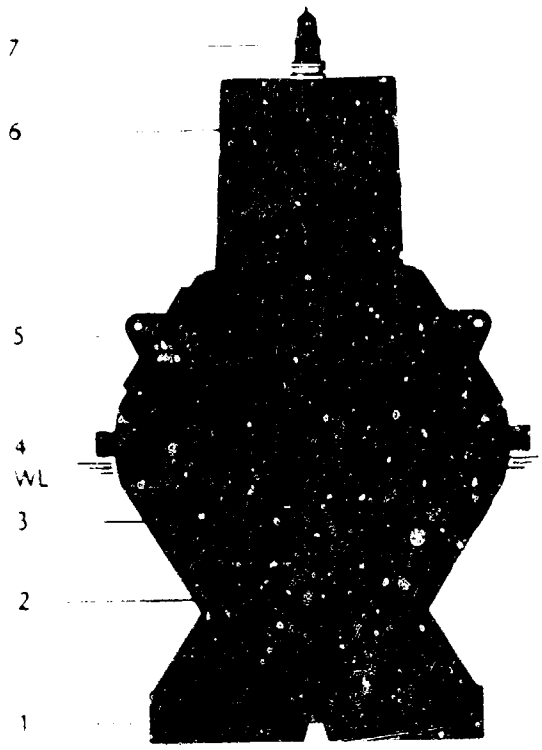

1 Ballast skirt
2 Single mooring eye
3 Balmoral DB9 battery
4 Rubber fender
5 Lifting eyes - 2 in number
6 Radar reflector
7 Balmoral B85 beacon
WL Waterline

P16

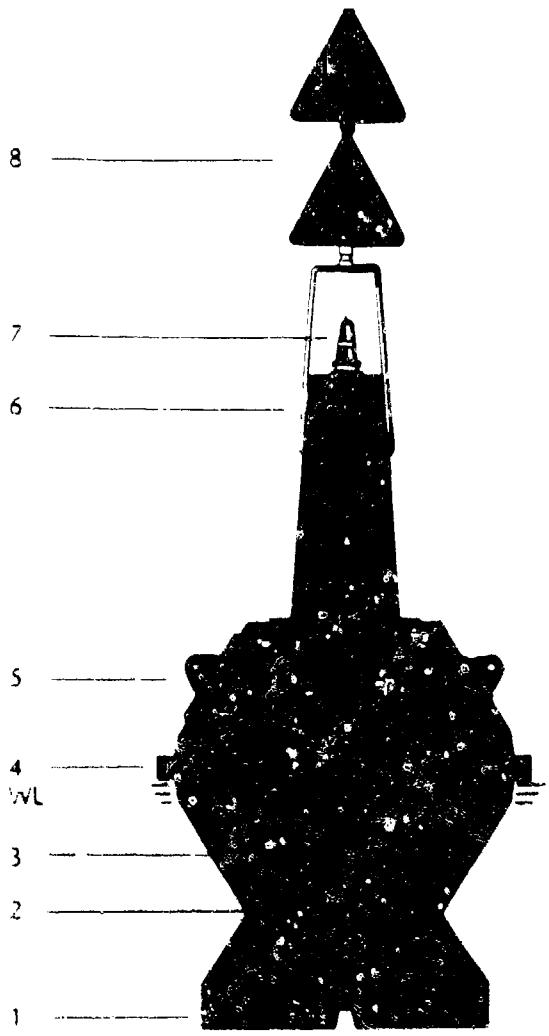

1 Ballast skirt
2 Single mooring eye
3 Balmoral DB9 battery
4 Rubber fender
5 Lifting eyes - 2 in number
6 Radar reflector (within pillar)
7 Balmoral BB5 beacon
8 Topmarks
WL Waterline

L21

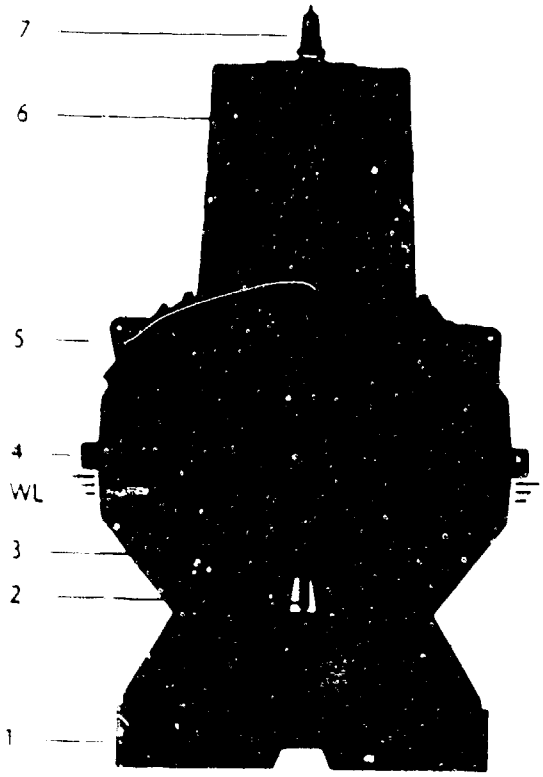

1 Ballast skirt
2 Single mooring eye
3 Balmoral DB9 battery
4 Rubber fender
5 Lifting eyes - 2 in number
6 Radar reflector
7 Balmoral 685 beacon
WL Waterline

P21

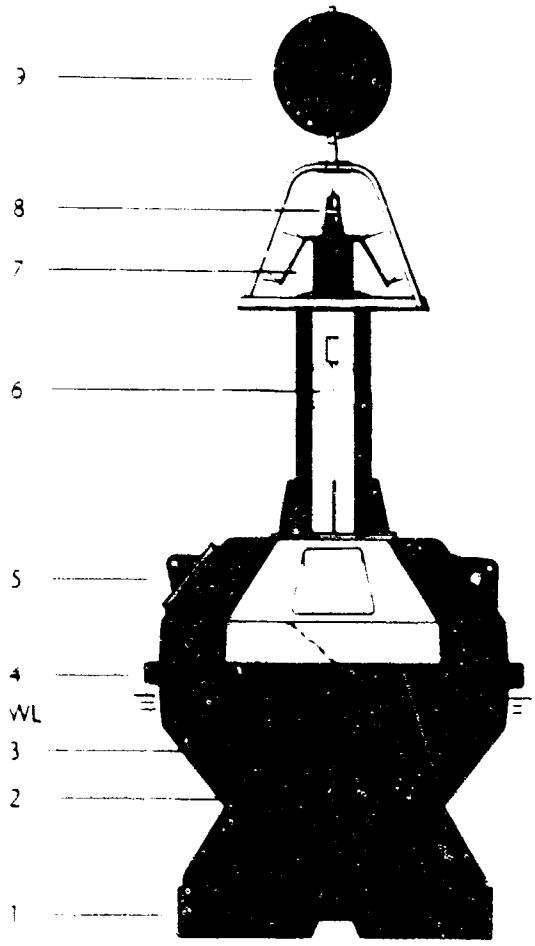

1 Ballast skirt
2 Single mooring eye
3 Balmoral DB9 battery (if fitted)
4 Rubber fender
5 Lifting eyes - 2 in number
6 Radar reflector
7 Balmoral Solargen pack
8 Balmoral B85 beacon
9 Topmark
WL Waterline

L40

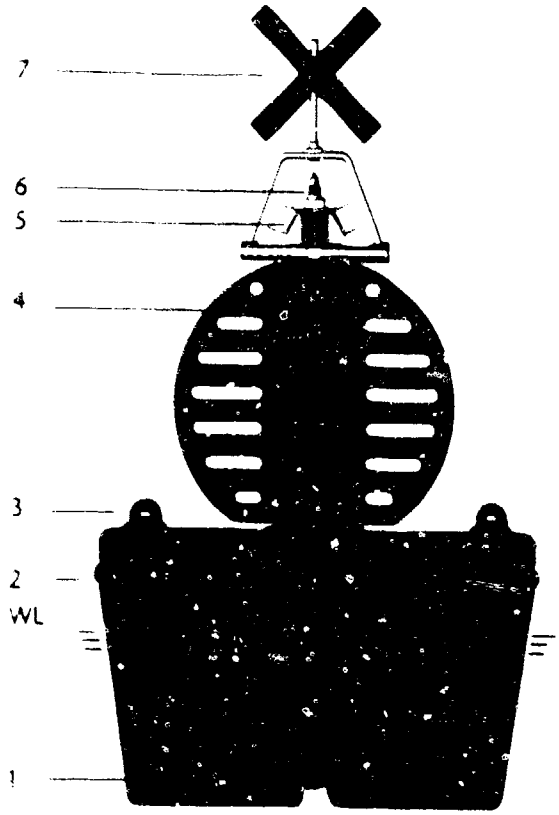

1 Single mooring eye
2 Rubber fender
3 Lifting eyes - 2 in number
4 Radar reflector
5 Balmoral solargen pack
6 Balmoral B85 beacon
7 Topmarks

P40

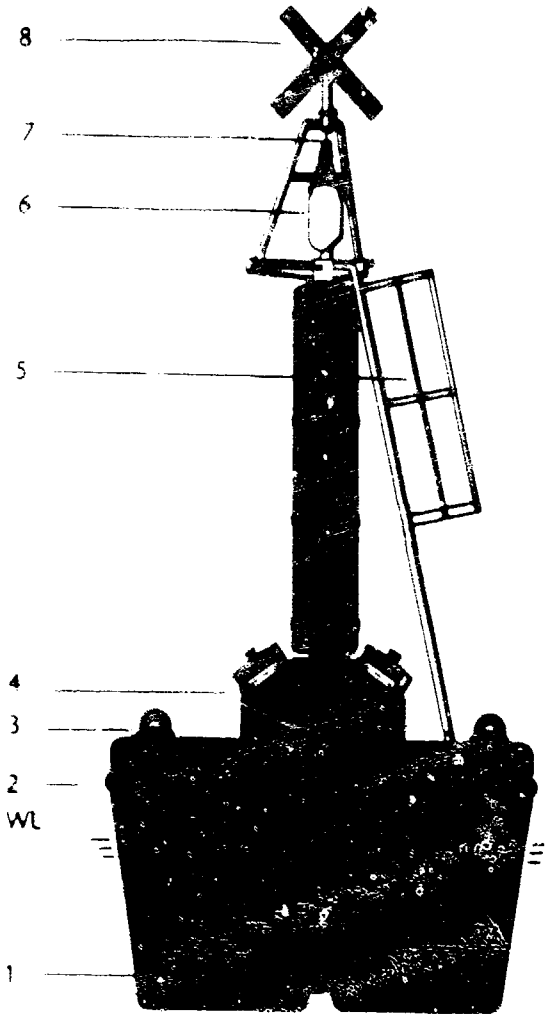

1 Single mooring eye
2 Rubber fender
3 Lifting eyes - 2 in number
4 Balmoral D89 batteries - 2 in number
5 Ladder
6 Radar reflector
7 Balmoral B85 beacon
8 Topmarks
WL Waterline

SPAR BUOYS

The SG2 and SC7 spar buoys

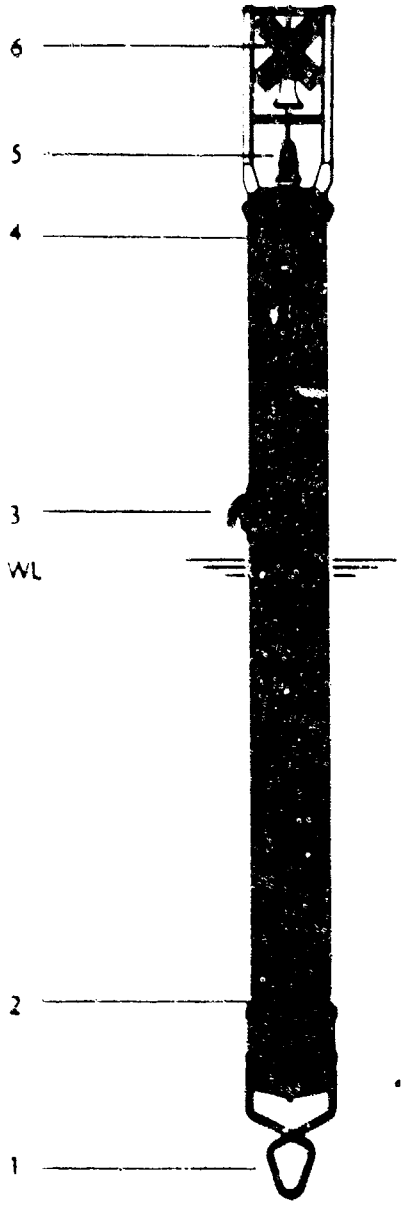

1 Single mooring eye
2 Balmoral D89 battery
3 Recovery hook
4 Radar reflector
5 Balmoral B85 beacon
6 Topmark
WL Waterline

CLASS V

CLASS VI

SPAR BUOY

CLASS II

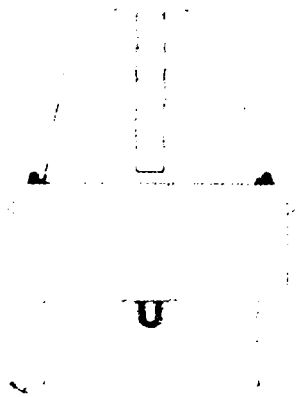

CLASS II

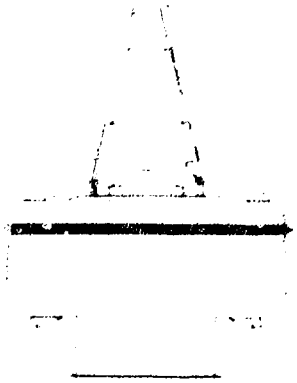

CLASS III

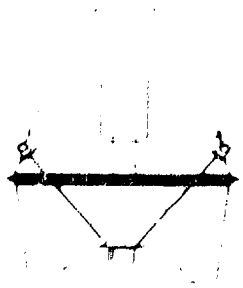

CLASS III

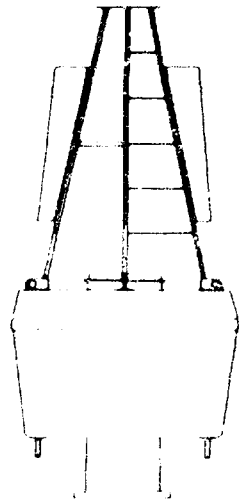

THIS PAGE INTENTIONALLY LEFT BLANK

AIDS TO NAVIGATION

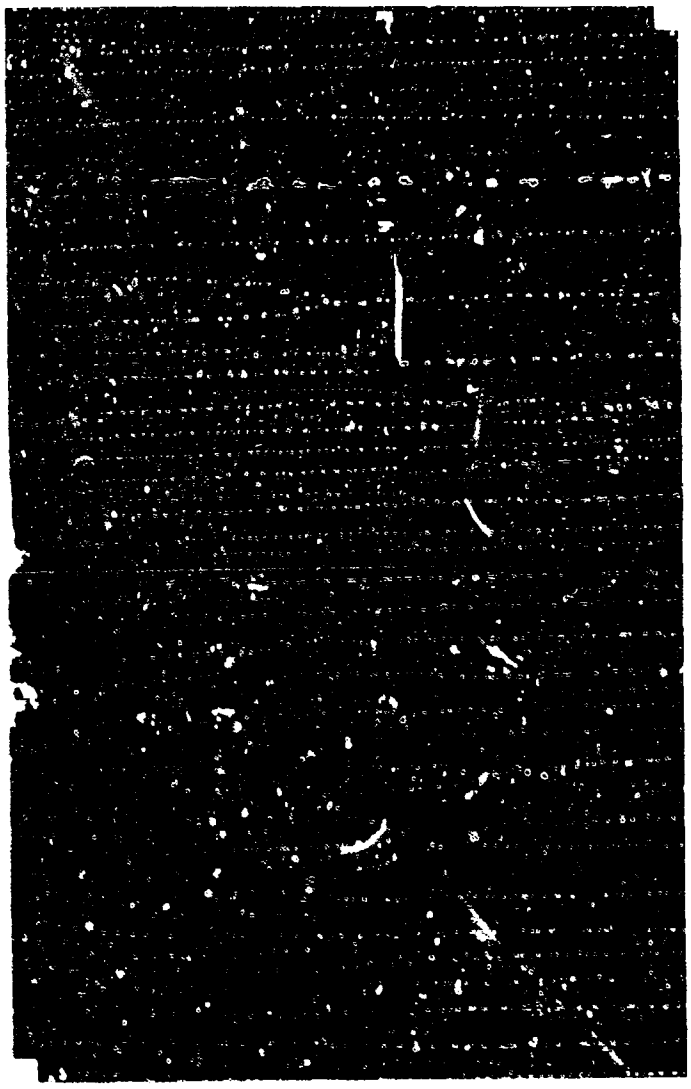

Pharos Marine

BC-21

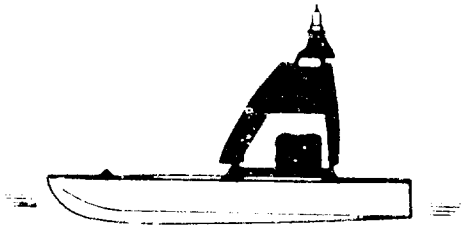

BC-22

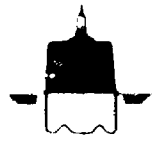

BS-13

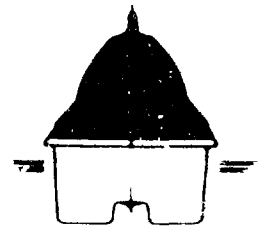

BS-14

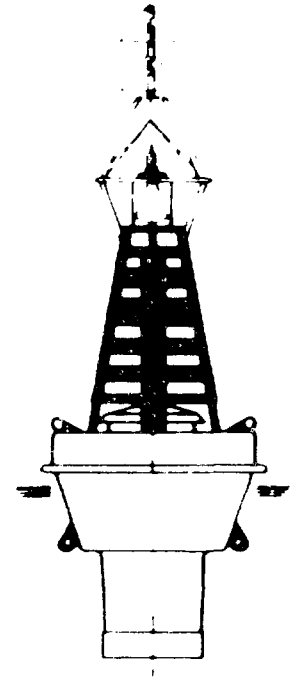

BS-16

BS-41 MkII

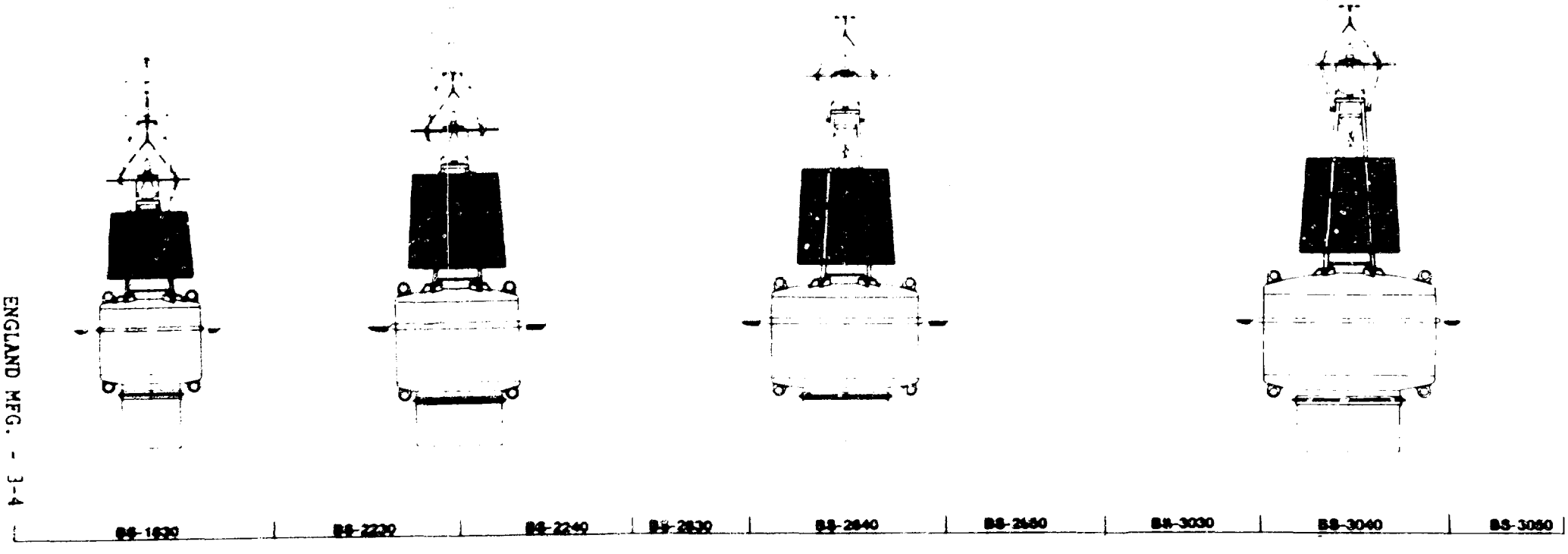

ENGLAND MFG. - 3-4

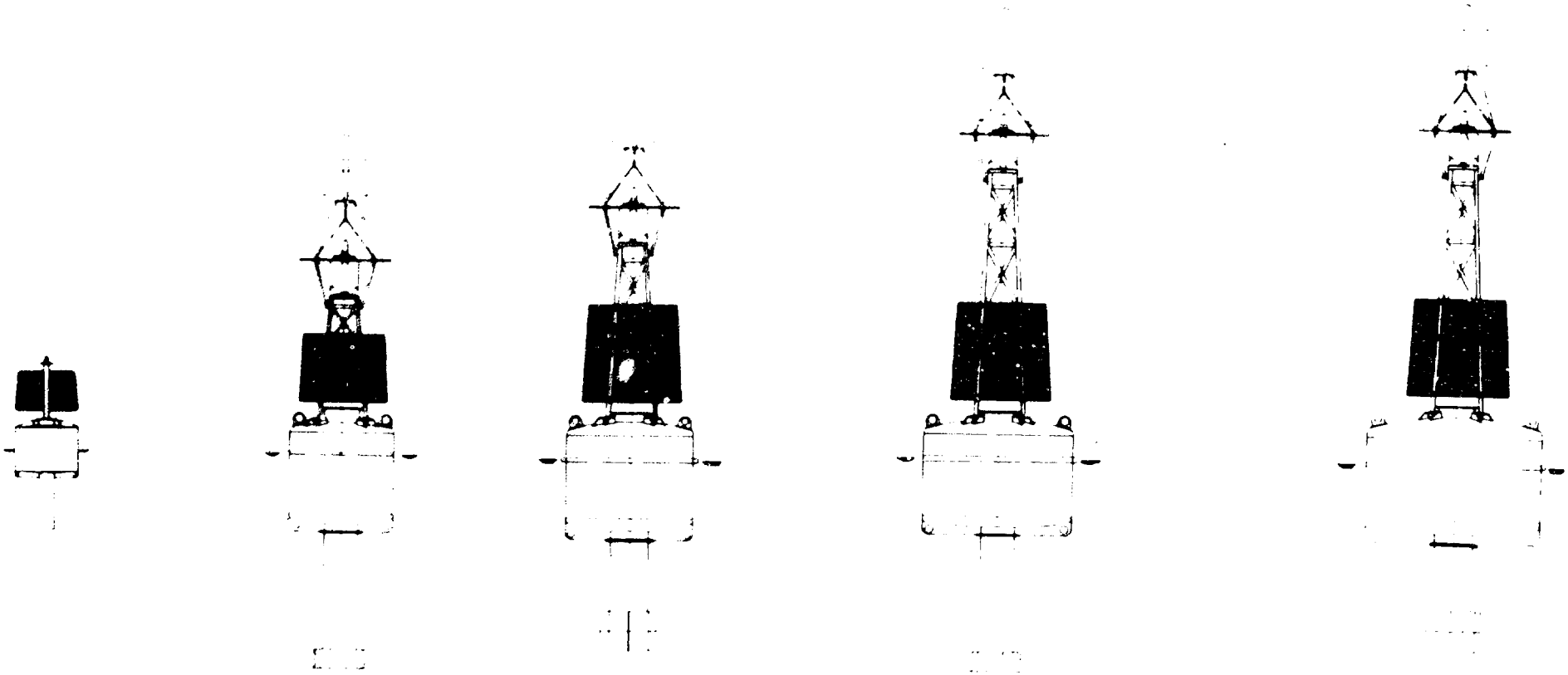

BT-1115 | BT-1125 | BT-1630 | BT-1840 | BT-2340 | BT-2250 | BT-2640 | BT-2650 | BT-2665 | BT-3040 | BT-3050 | BT-3065

THIS PAGE INTENTIONALLY LEFT BLANK

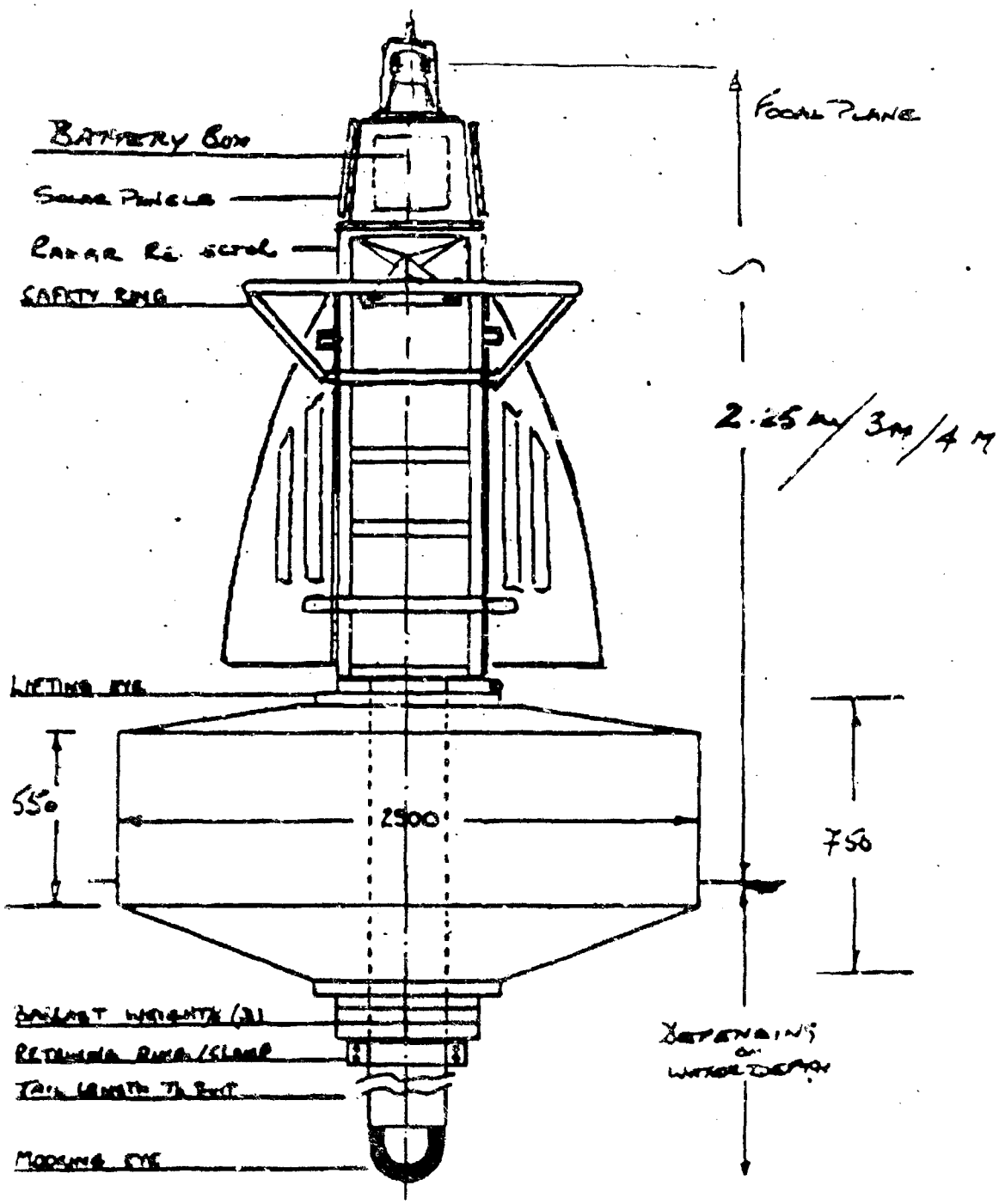

ENGLAND MFG 4-1

THIS PAGE INTENTIONALLY LEFT BLANK

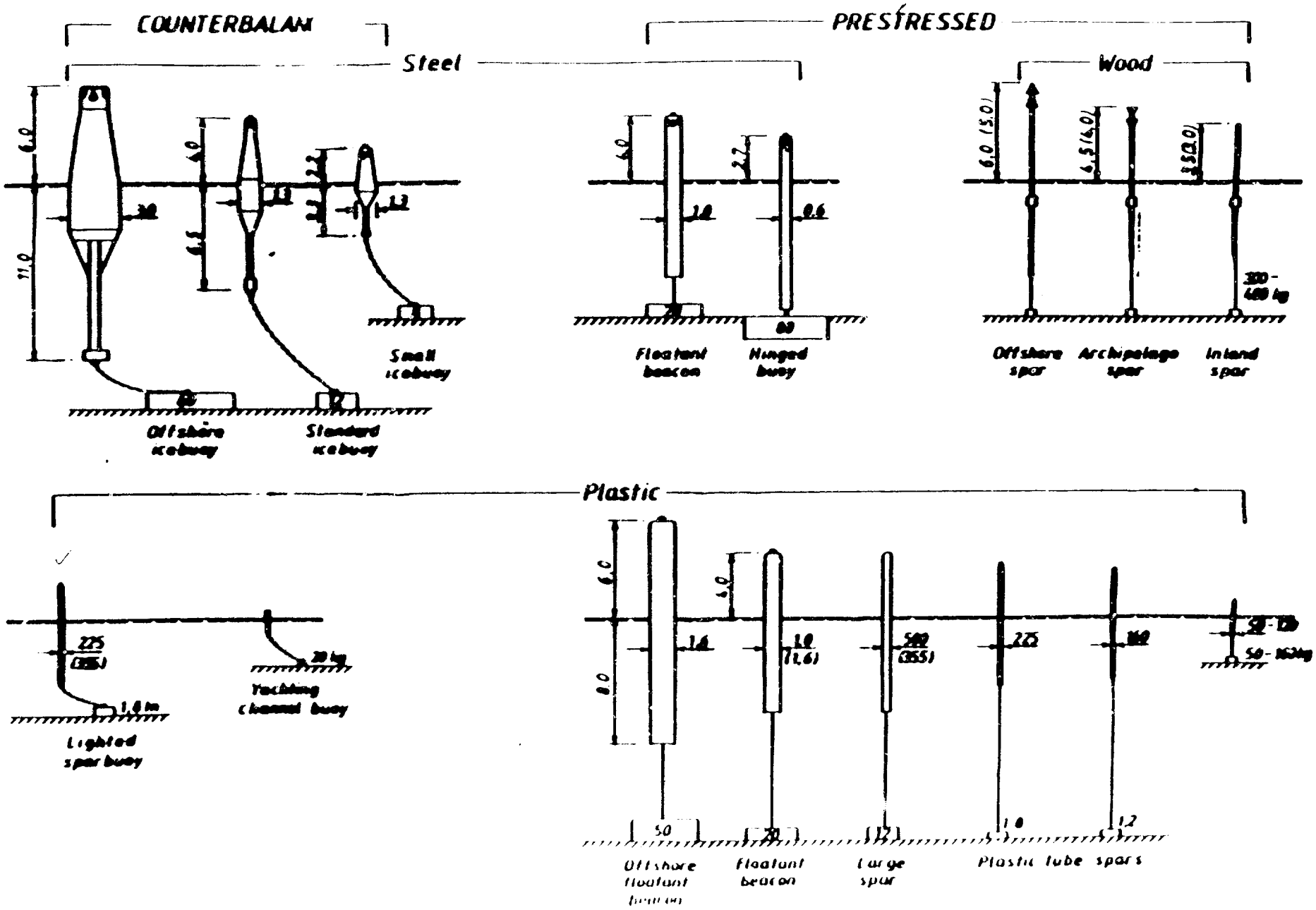
COUNTERBALAN
PRESTRESSED
Steel
Wood
Small icebuoy
Offshore icebuoy
Standard icebuoy
Floatant beacon
Hinged buoy
Offshore spar
Archipelago spar
Inland spar
Plastic
Lighted spar buoy
Yachting channel buoy
Offshore floatant beacon
Floatant beacon
Large spar
Plastic tube spars

18 JP 13 - 1050

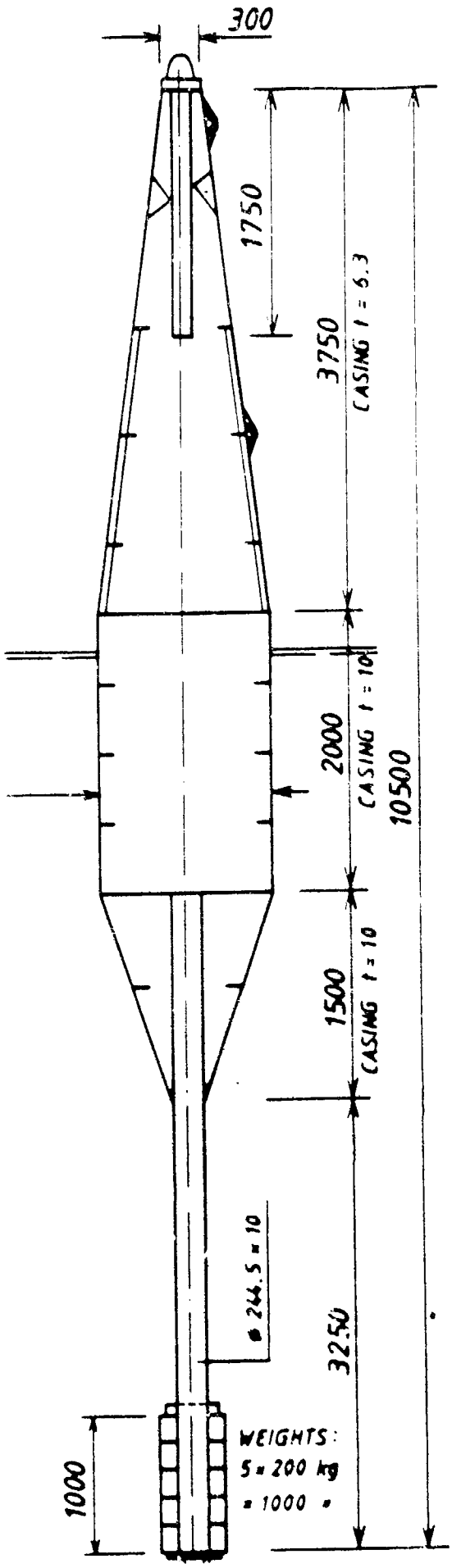

JP 130-550

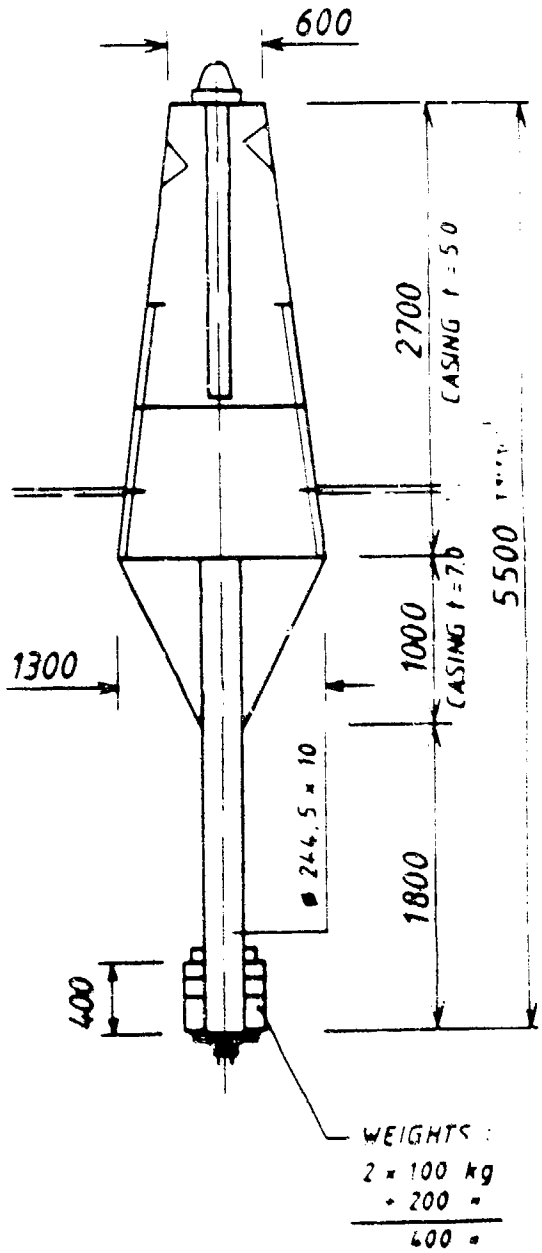

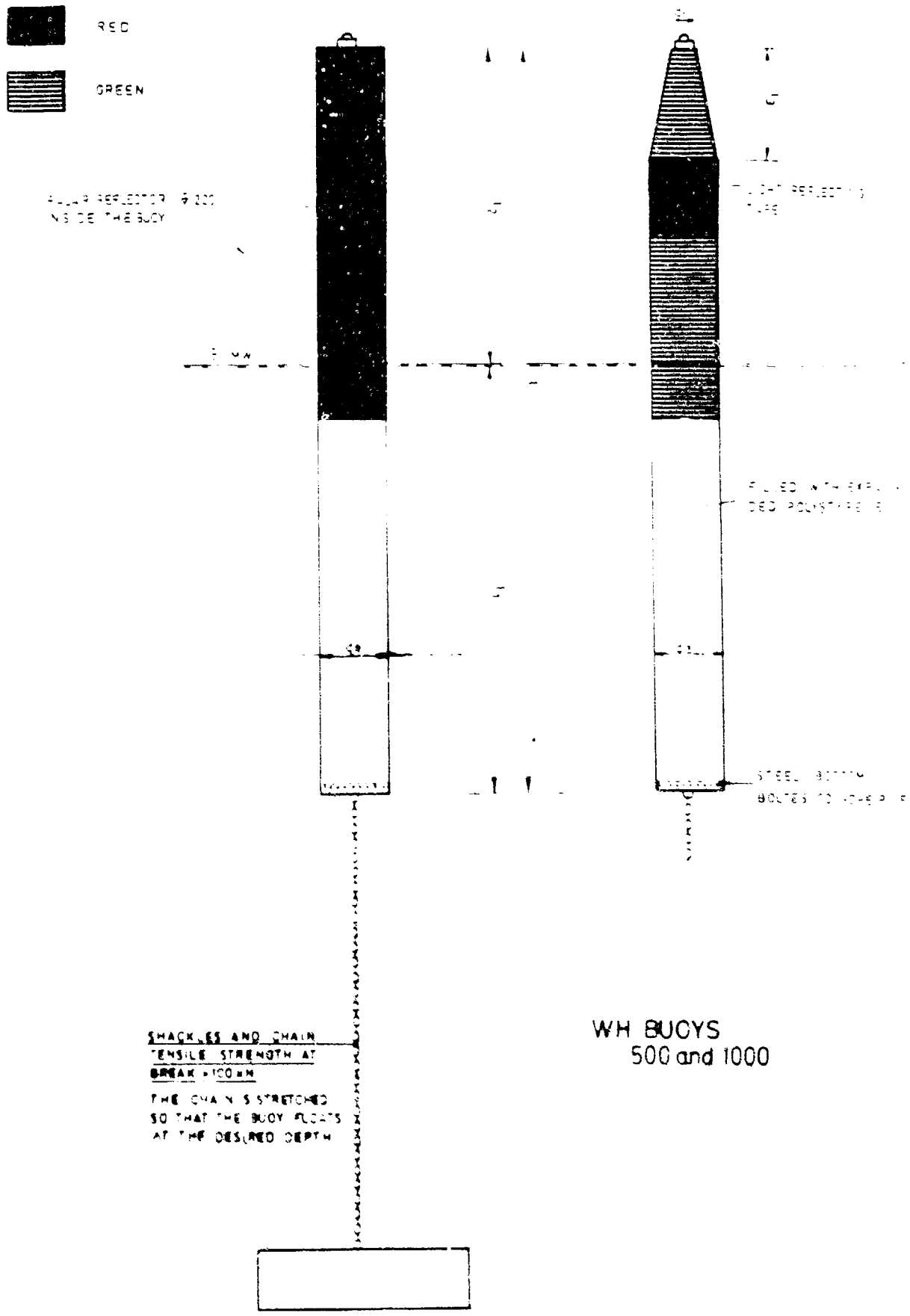

WH BUOYS
500 and 1000

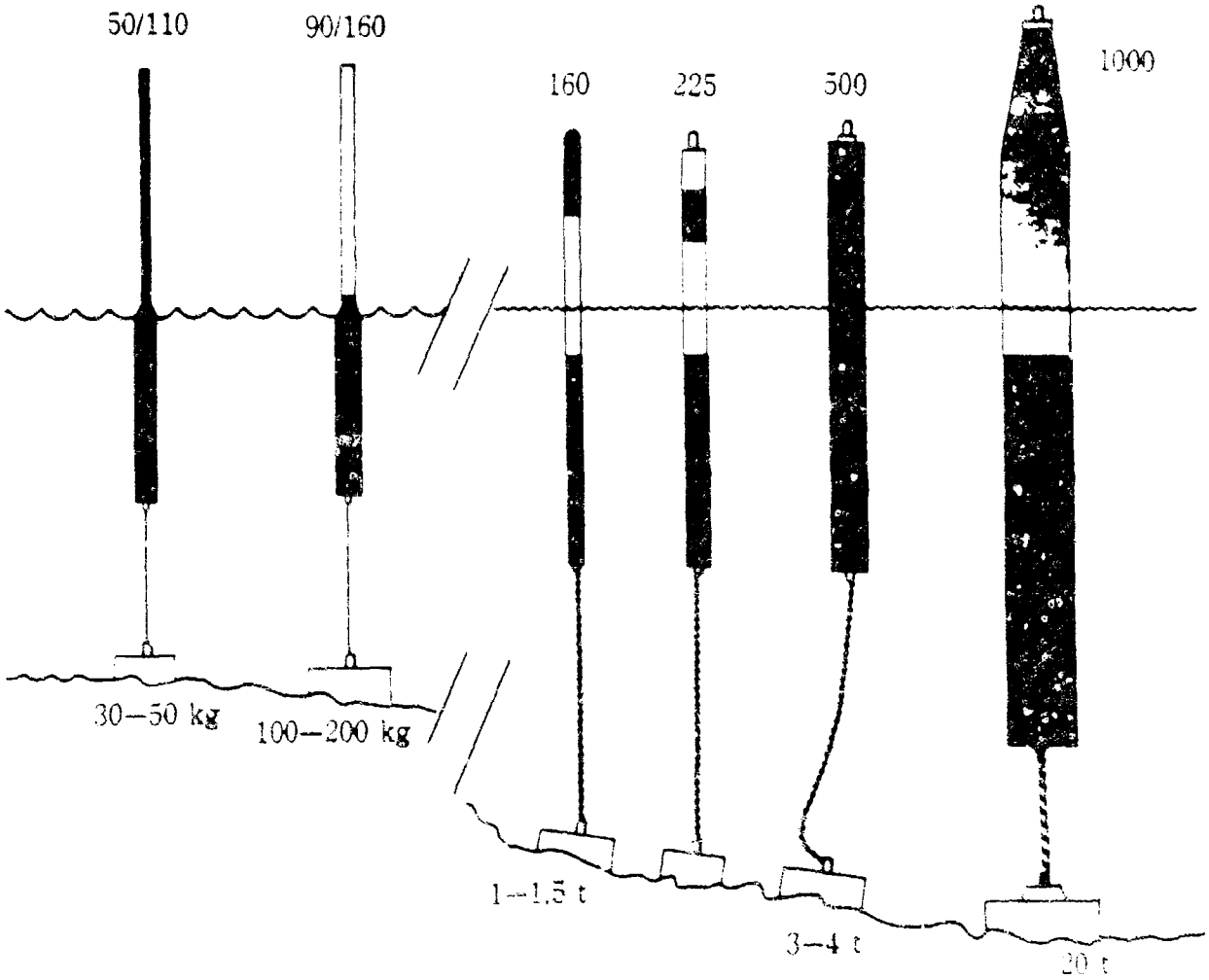

WIIK&HÖGLUND NAVIGATION AID TYPES

CONSTRUCTION:

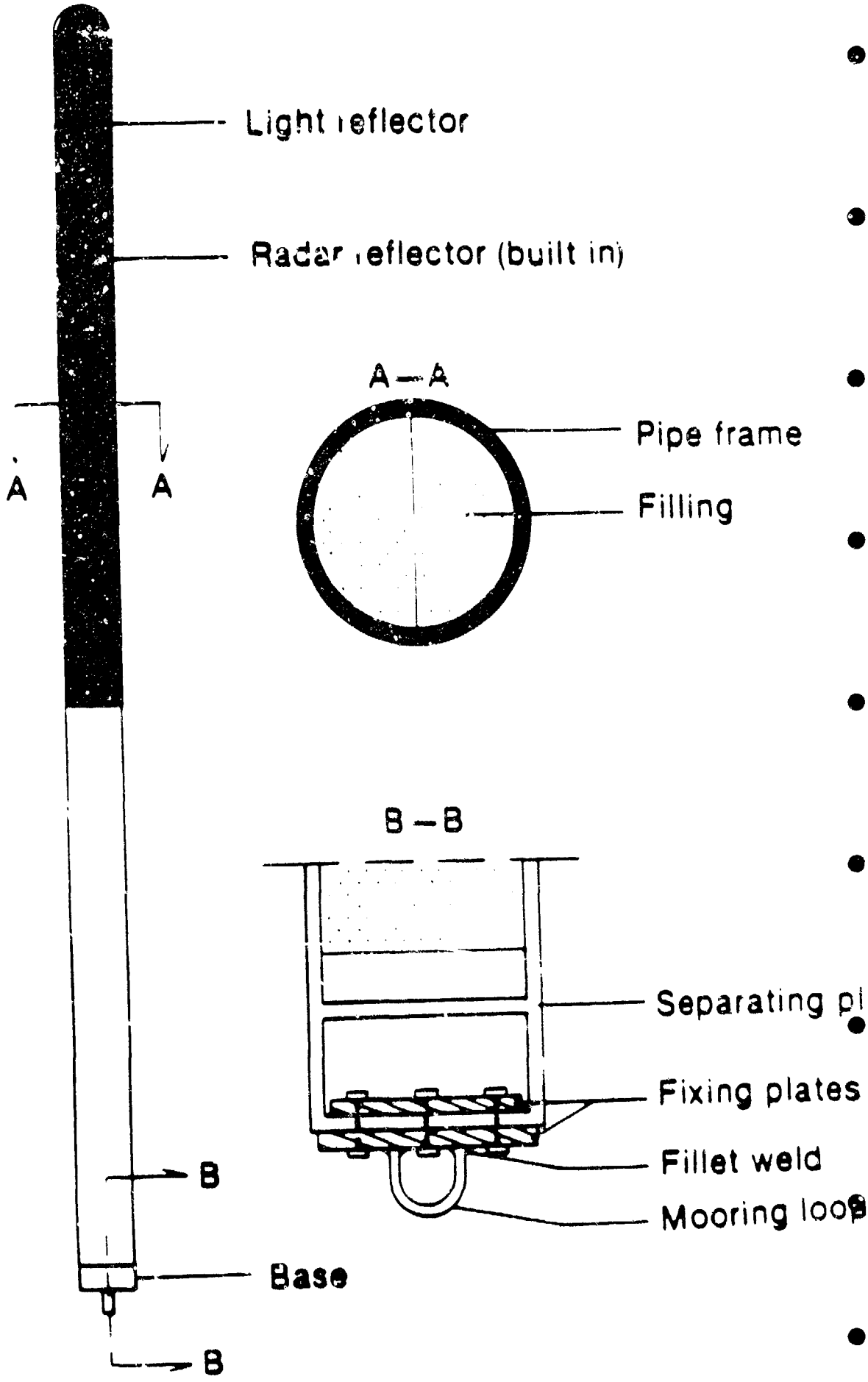

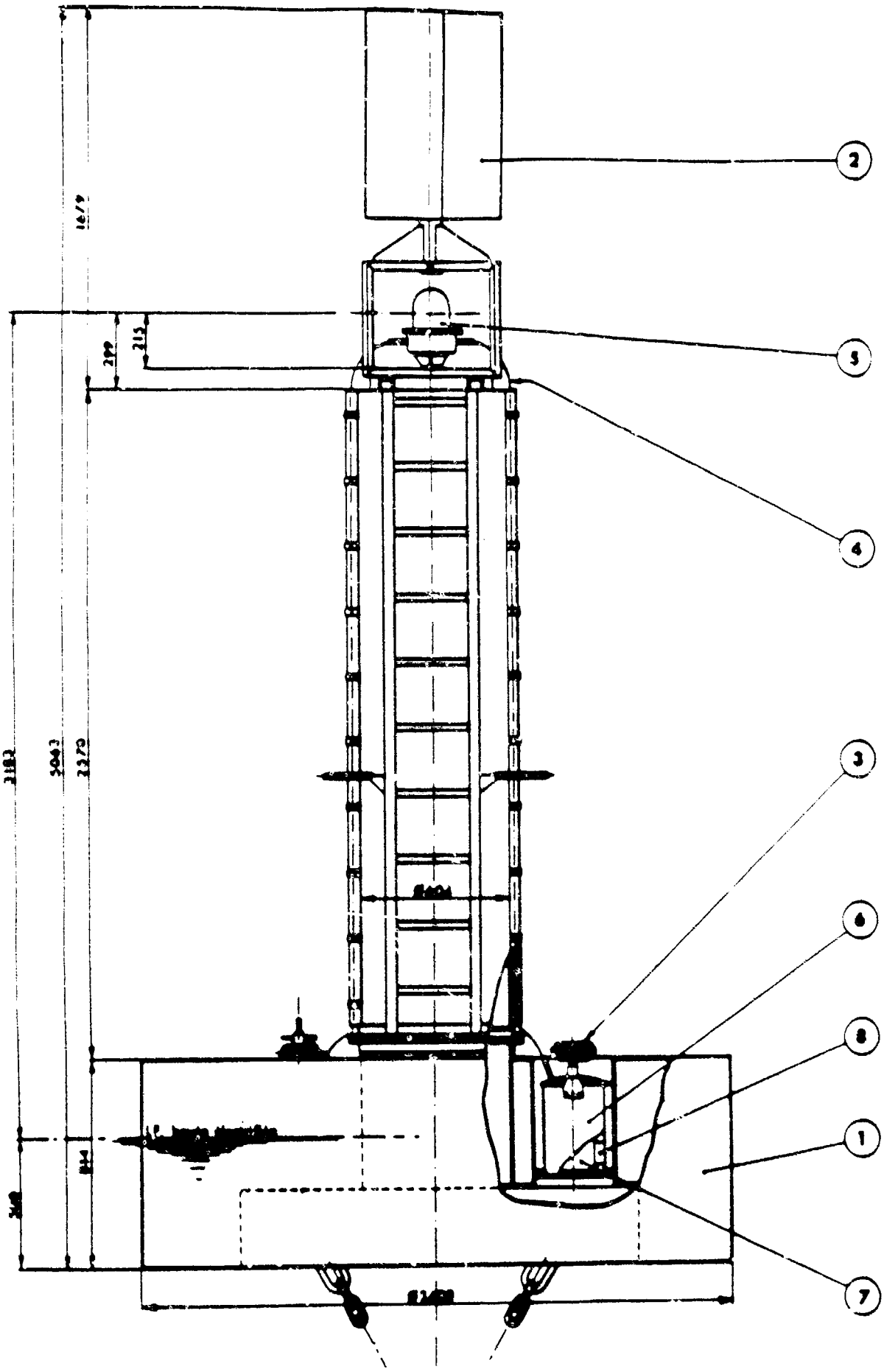
2
5
4
3
6
8
1
7

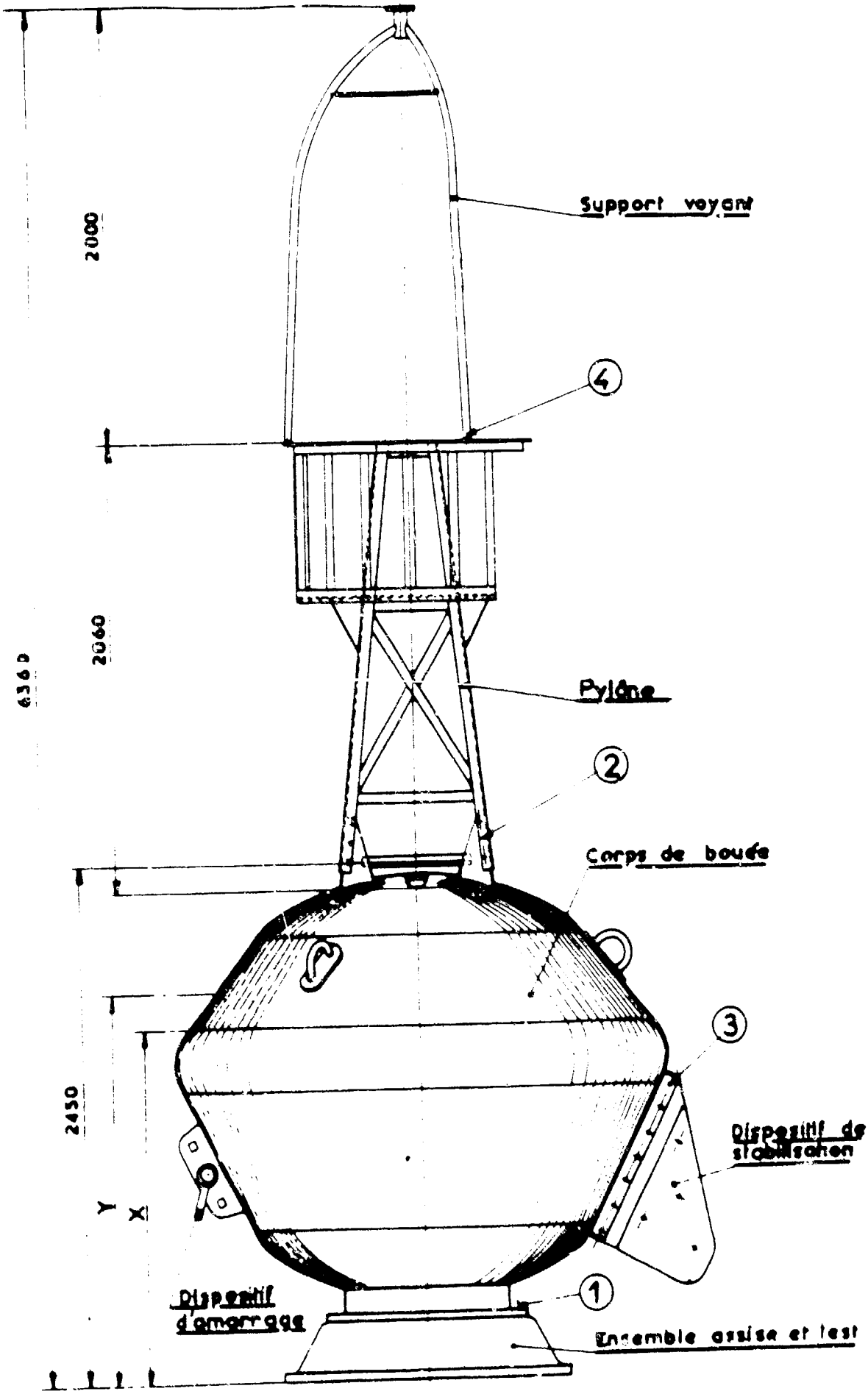
Support voyant
2000
4
2060
6360
Pylône
2
Corps de bouée
3
2450
Dispositif de stabilisation
Y
X
Dispositif d'amarrage
1
Ensemble assise et lest

VE ON A QUEUE : Equipement solaire "lég."

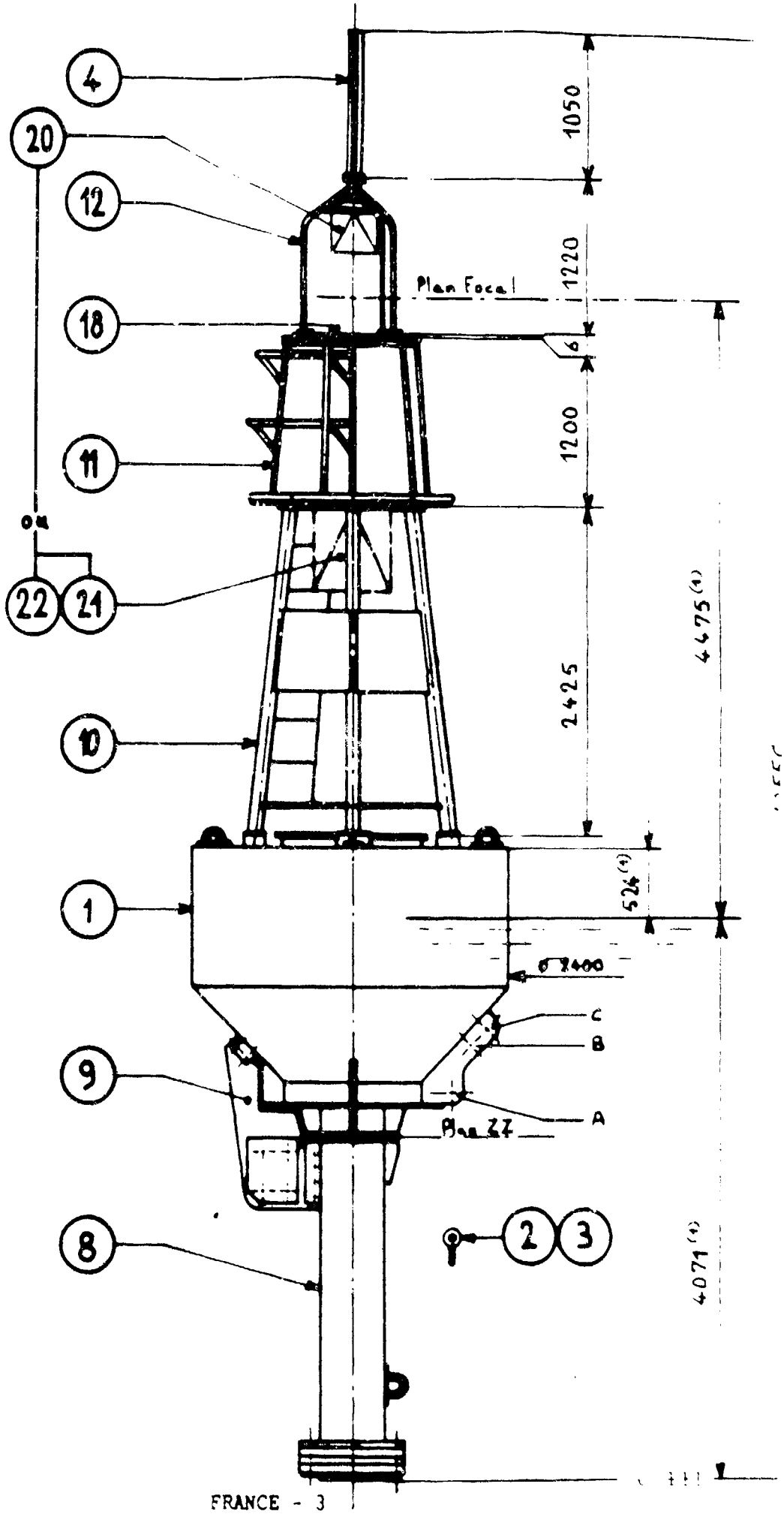

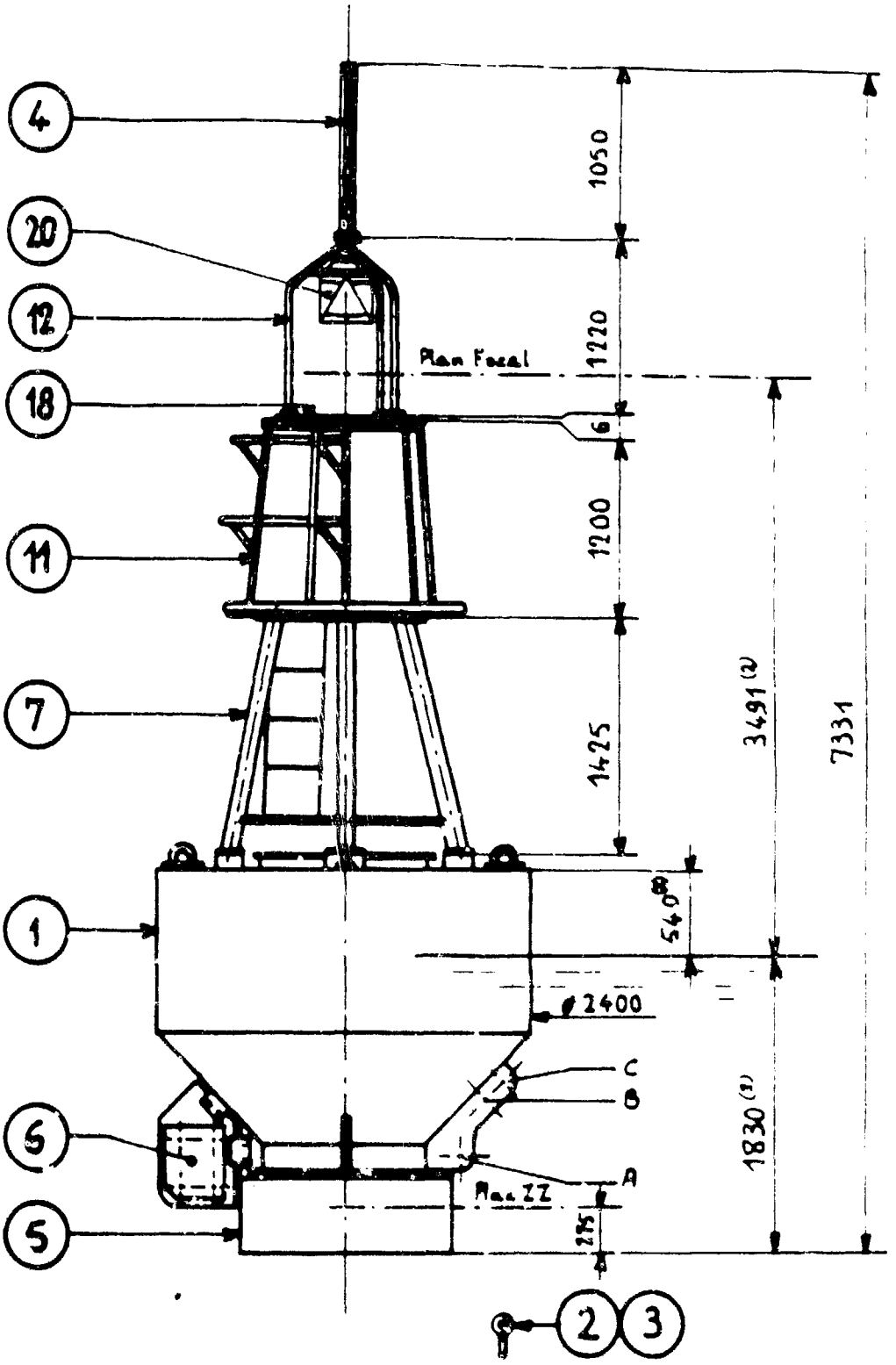
4
20
12
18
11
7
1
6
5
2
3
1050
1220
Plan Focal
6
1200
1425
3491 (2)
7331
540
2400
C
B
A
1830 (1)
Max ZZ
275

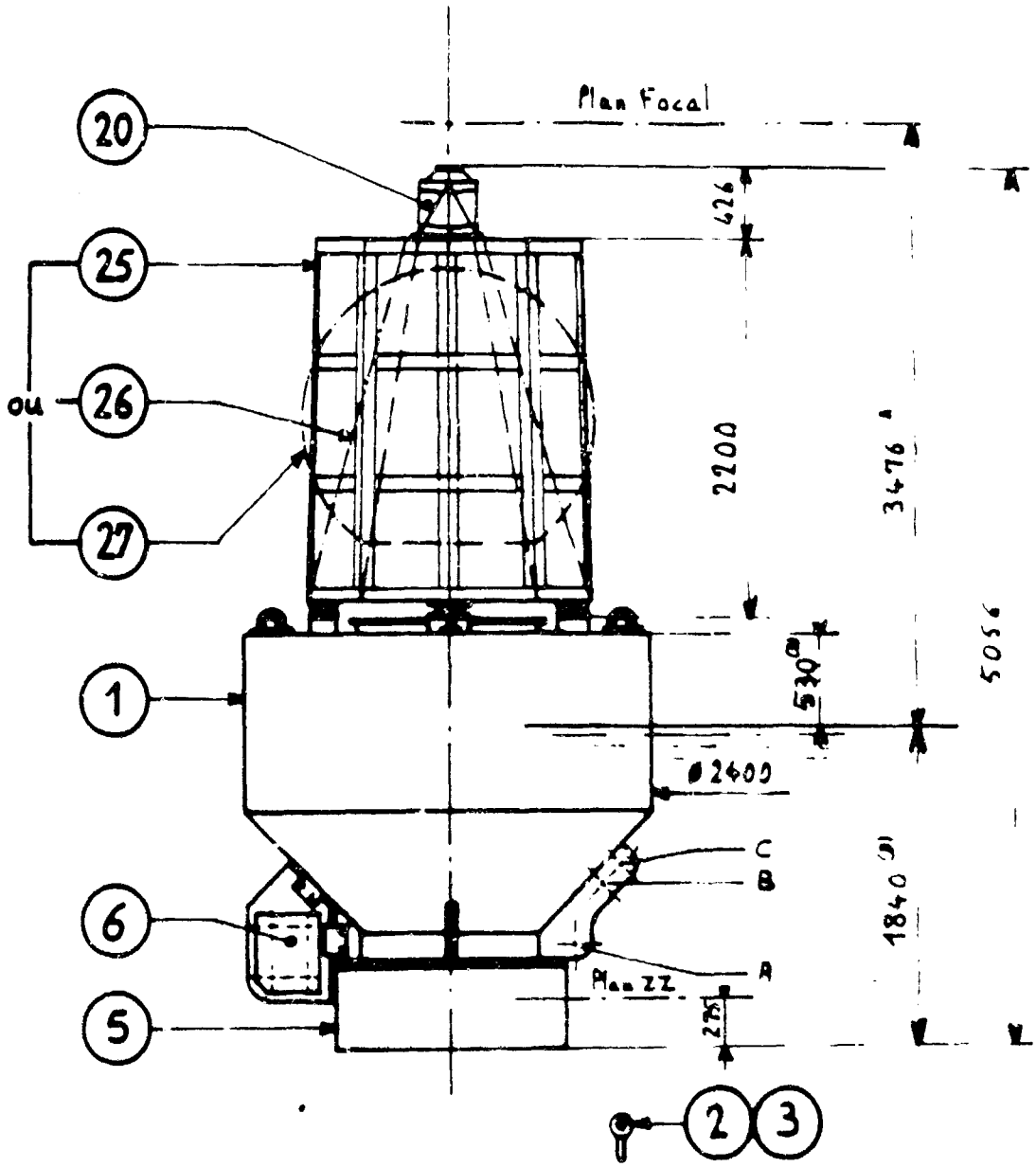
Plan Focal
20
25
ou
26
27
1
6
5
426
2200
3476
5056
530
Ø2400
C
B
A
1840
Plan ZZ
275
2
3

BOUEE LUMINEUSE TYPE NOLWEN II

Version à queue équipée d'un Espar

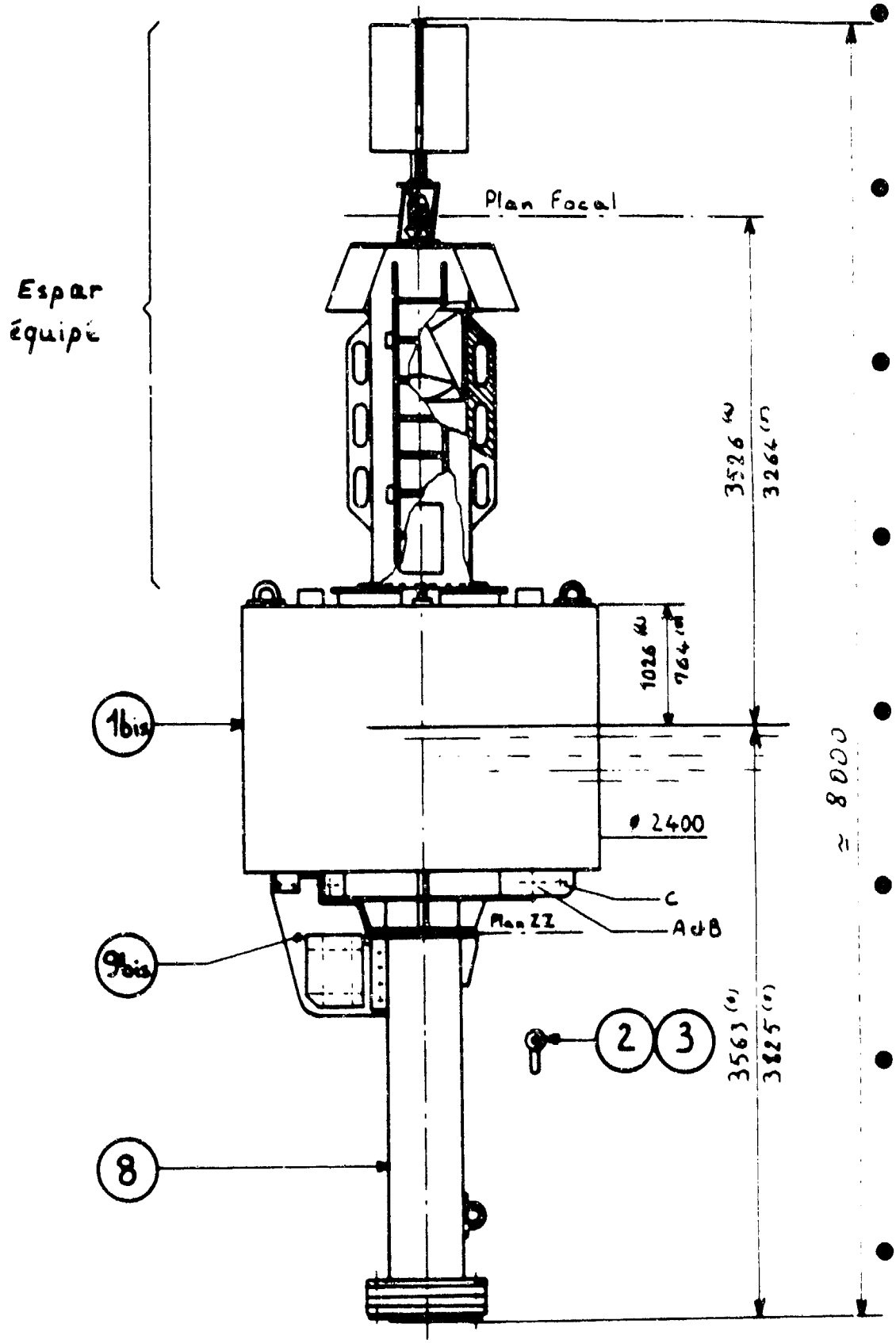

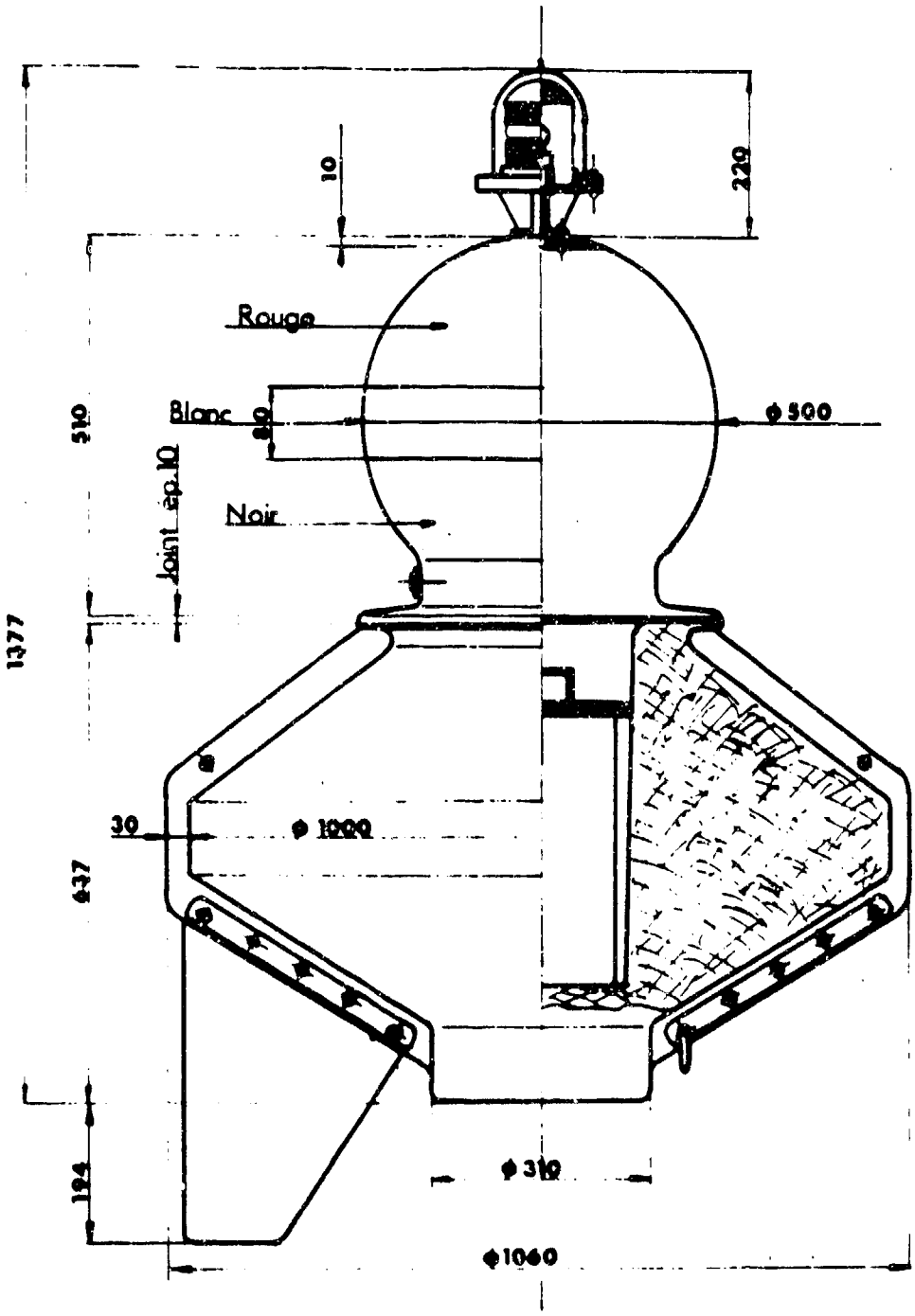
10
220
Rouge
Blanc
80
510
Joint ép.10
Noir
φ500
1377
30
φ1000
637
184
φ310
φ1060

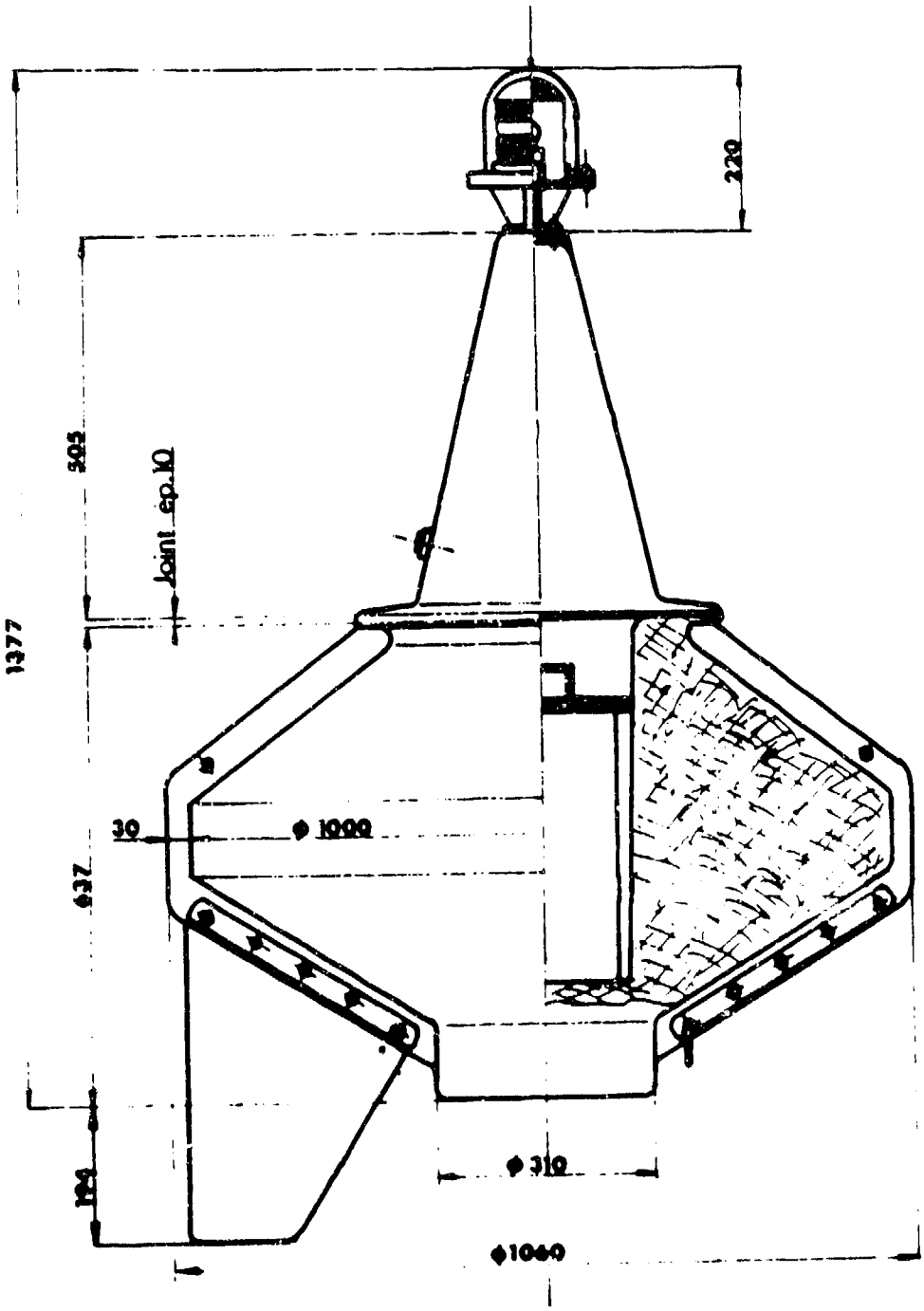
220
505
Joint ép.10
1377
30
ϕ 1000
ϕ37
104
ϕ 310
ϕ1060

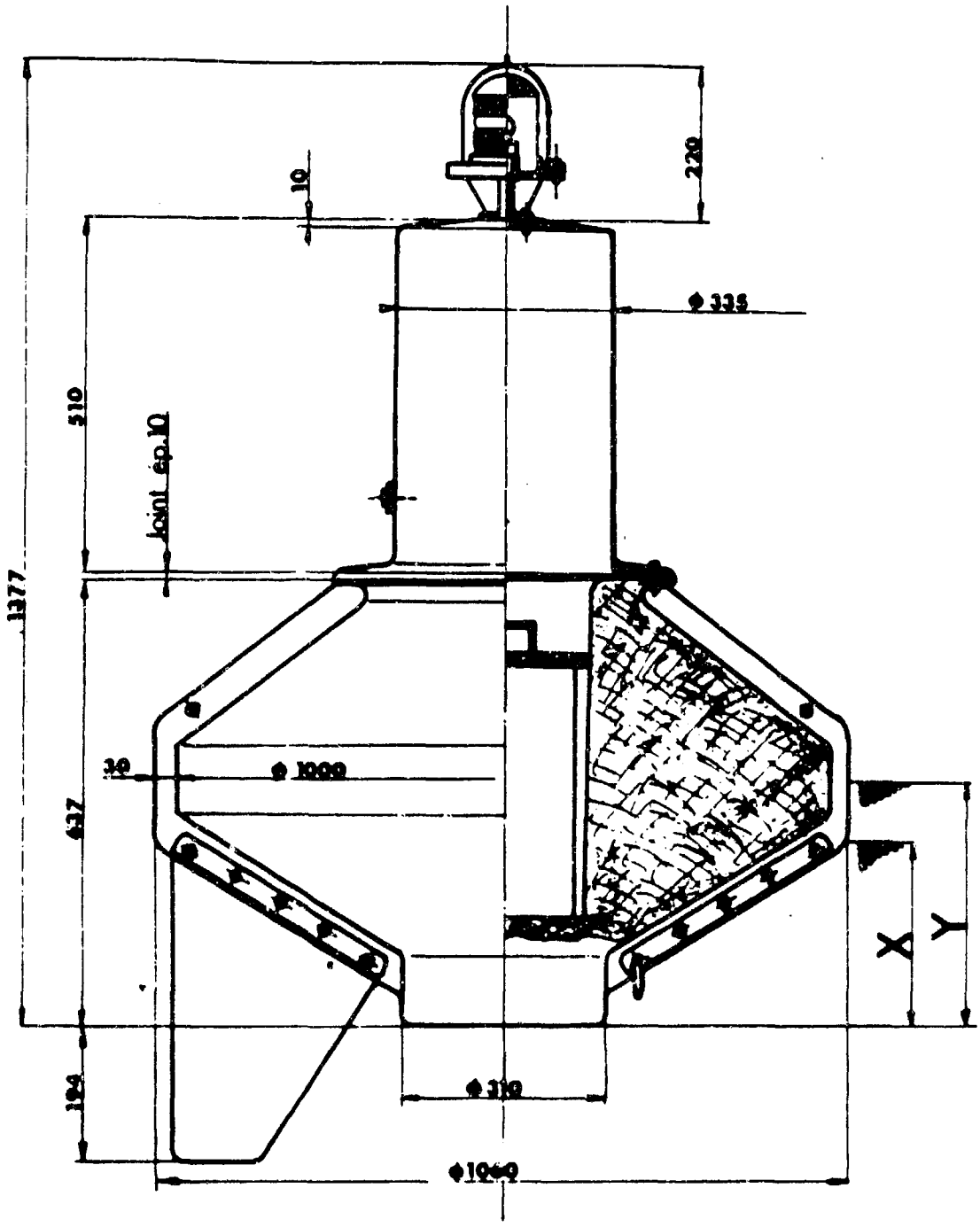
220
10
Φ 335
510
joint ép.10
1377
30
Φ 1000
637
X
Y
184
Φ 310
Φ1060

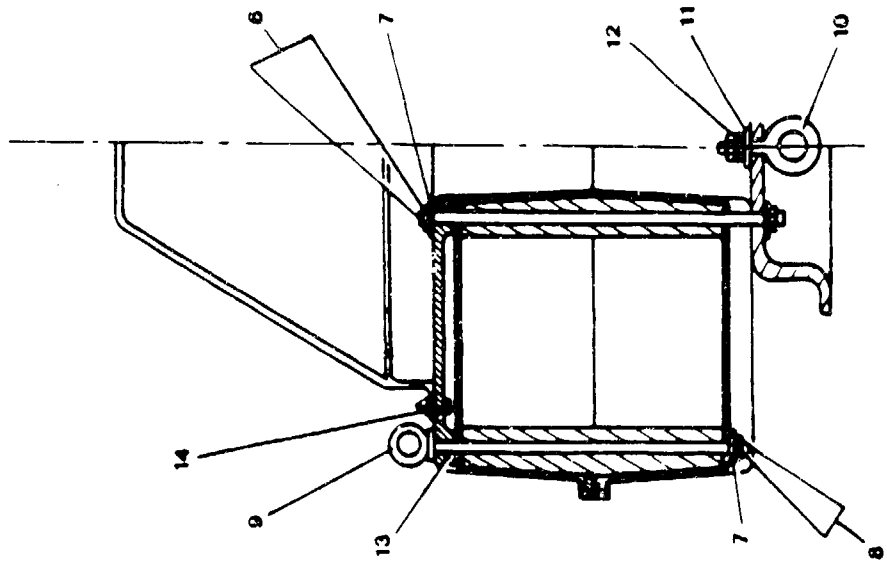
6
7
12
11
10
14
9
13
7
8

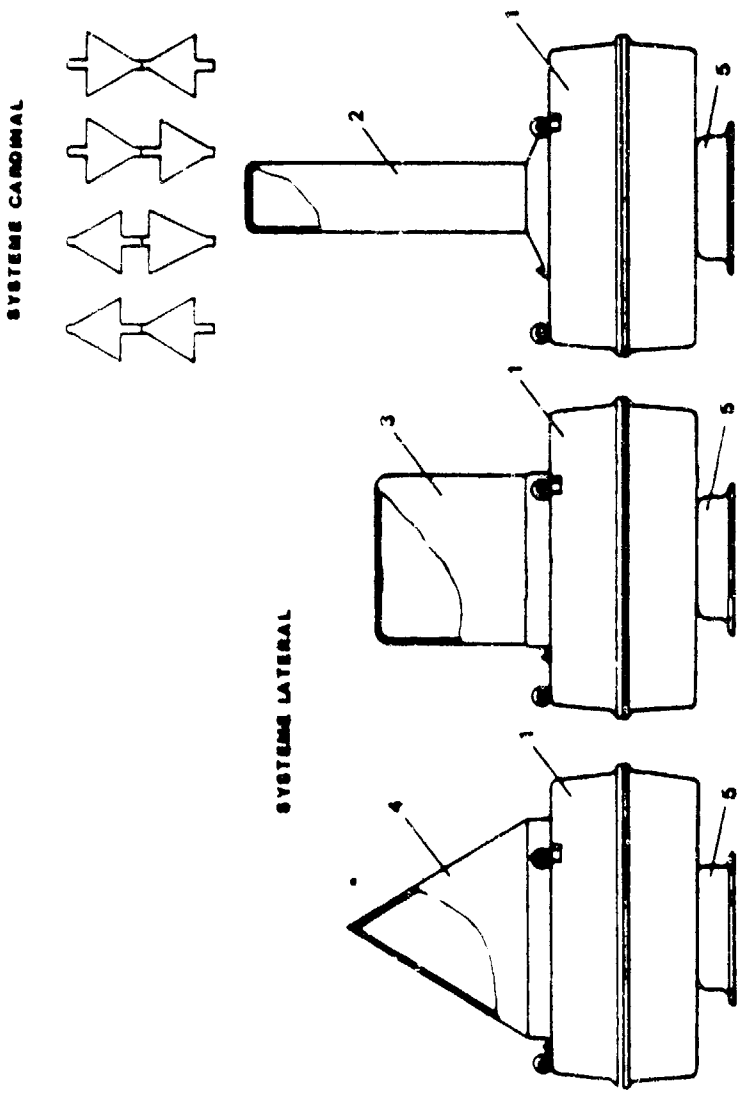
SYSTEME CARDINAL
SYSTEME LATERAL
1
2
5
1
3
5
1
4
5

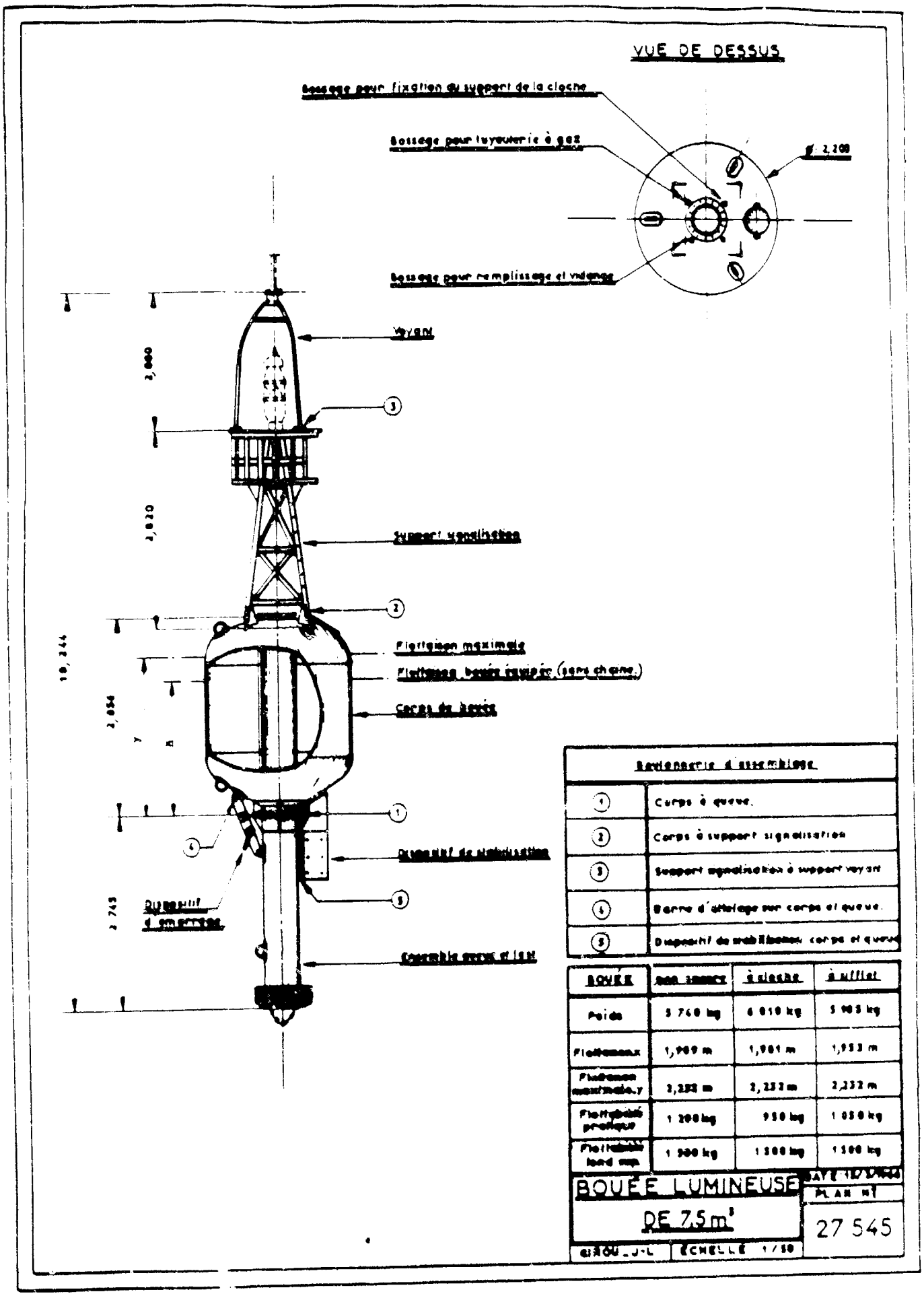

Nomenclature d'assemblage	
1	Corps à queue.
2	Corps à support signalisation
3	Support signalisation à support voyant
4	Barre d'attelage sur corps et queue.
5	Dispositif de stabilisation corps et queue

BOUÉE	non amarrée	à cloche	à suffiet
Poids	3 740 kg	6 010 kg	5 905 kg
Flottaison	1,969 m	1,981 m	1,953 m
Flottaison maximale	2,252 m	2,232 m	2,232 m
Flottabilité pratique	1 200 kg	950 kg	1 050 kg
Flottabilité land sup.	1 500 kg	1 300 kg	1 500 kg

BOUÉE LUMINEUSE DE 7,5 m³

DATE 12/1/1983

PLAN N° 27 545

GIRÔU J-L

ÉCHELLE 1/50

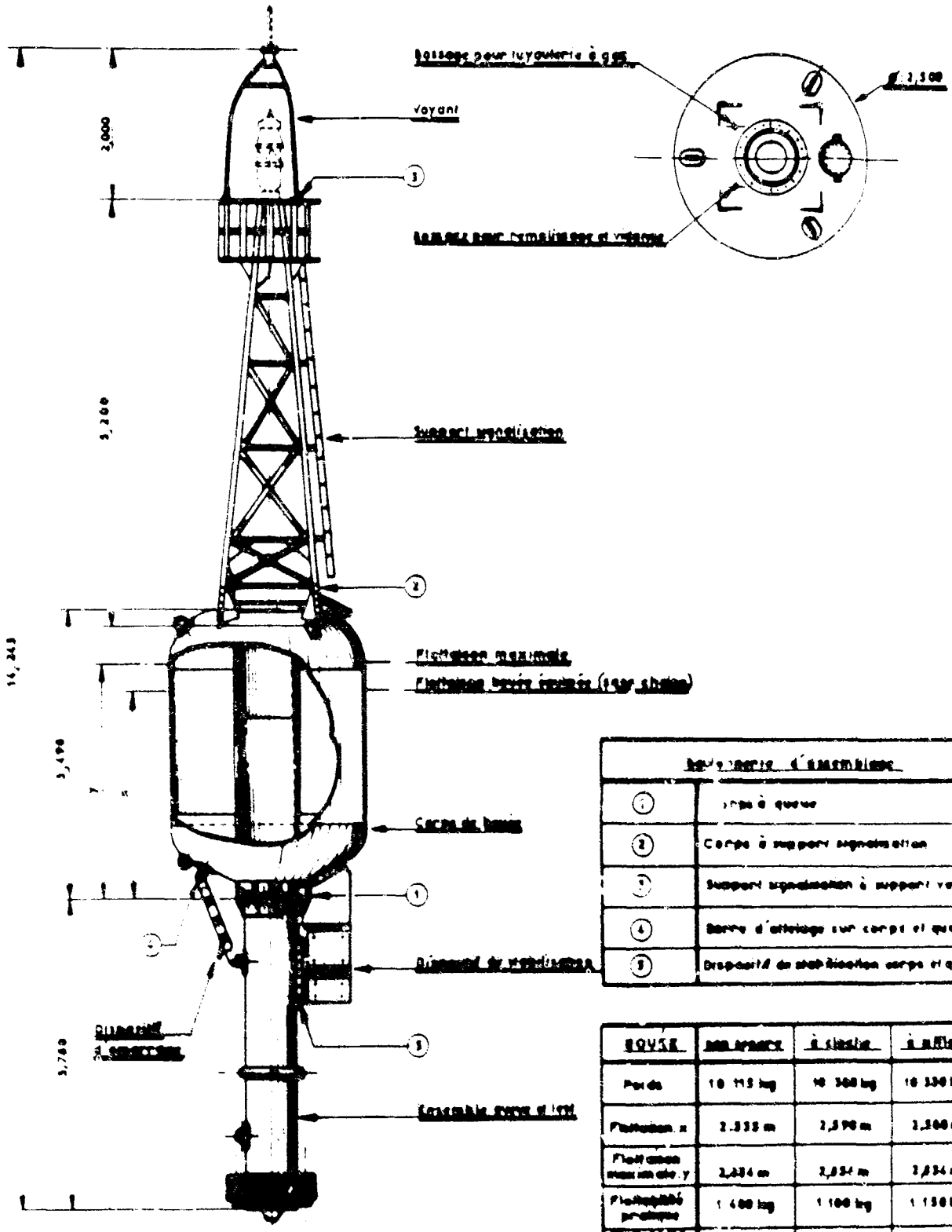

Nomenclature d'assemblage	
1	Corps à queue
2	Corps à support signalisation
3	Support signalisation à support voyant
4	Barre d'attelage sur corps et queue
5	Dispositif de stabilisation corps et queue

BOUÉE	non amarrée	à vide	à mi-lest
Poids	10 115 kg	10 360 kg	10 330 kg
Flottaison x	2,333 m	2,590 m	2,500 m
Flottaison maximale y	2,834 m	2,834 m	2,834 m
Flottabilité primaire	1 400 kg	1 100 kg	1 150 kg
Flottabilité hard sup.	2 250 kg	2 250 kg	2 250 kg

BOUÉE LUMINEUSE DE 12 m²	DATE 10/04/84 PLAN N° 27 528
GIRON J-L	ECHELLE 1/50

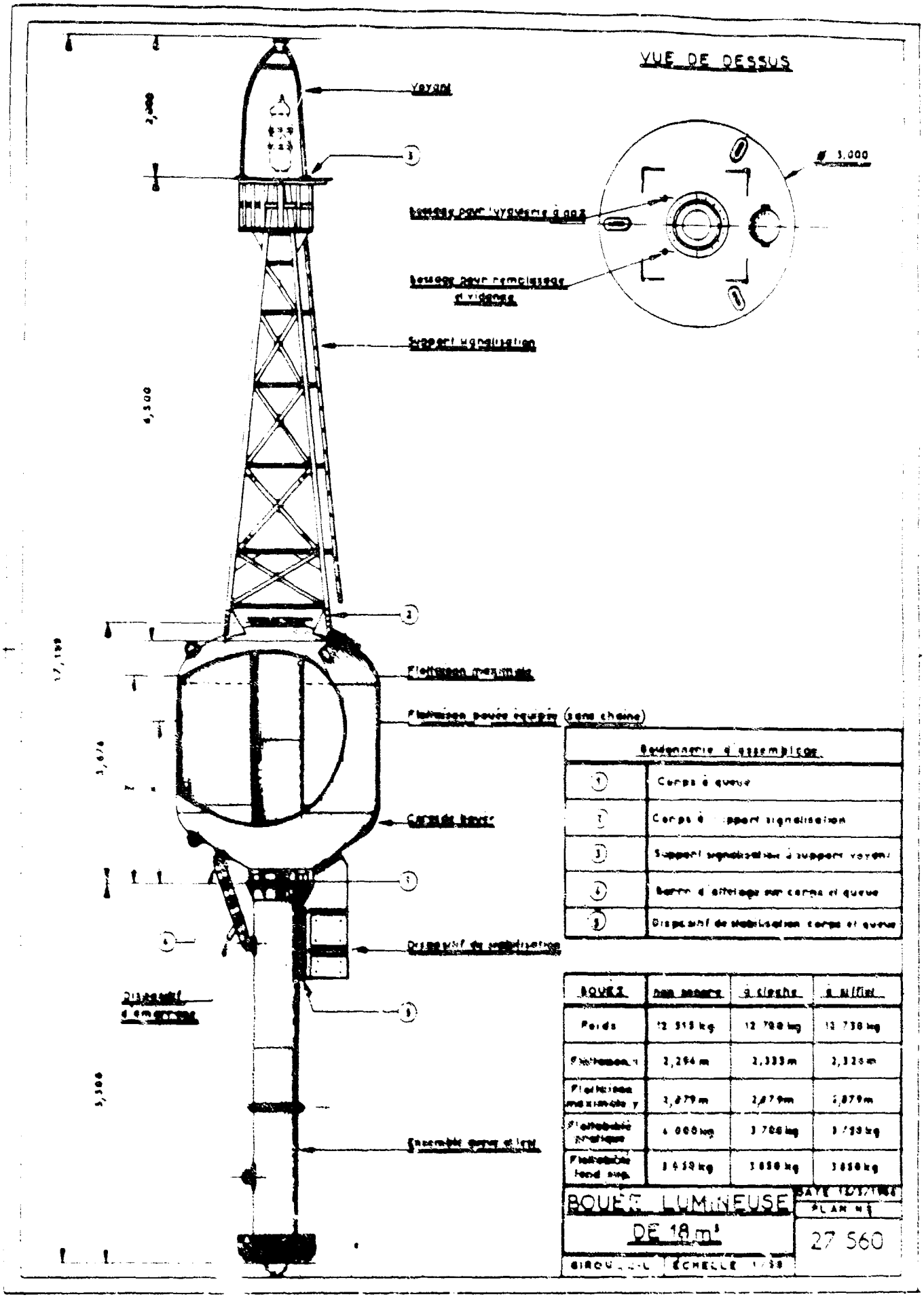
VUE DE DESSUS
Voyant
Support signalisation
Flottaison mesurée
Flottaison pouvoir équipée (sans chaîne)
Capuchon haut
Dispositif de stabilisation
Dispositif d'amarrage
Ensemble queue et lest
Bordereau d'assemblage
Corps à queue
Corps à support signalisation
Support signalisation à support voyant
Dispositif de stabilisation corps et queue
BOUEE
non peinte
à sirène
à sifflet
Poids
12 315 kg
12 790 kg
13 730 kg
2,294 m
2,333 m
2,326 m
2,879 m
2,879 m
2,879 m
4 000 kg
3 706 kg
3 759 kg
3 659 kg
3 659 kg
3 659 kg
BOUEE LUMINEUSE
DE 18 m³
27 560
ÉCHELLE

DELPHINE GRP BUOY

SKIRT TYPE

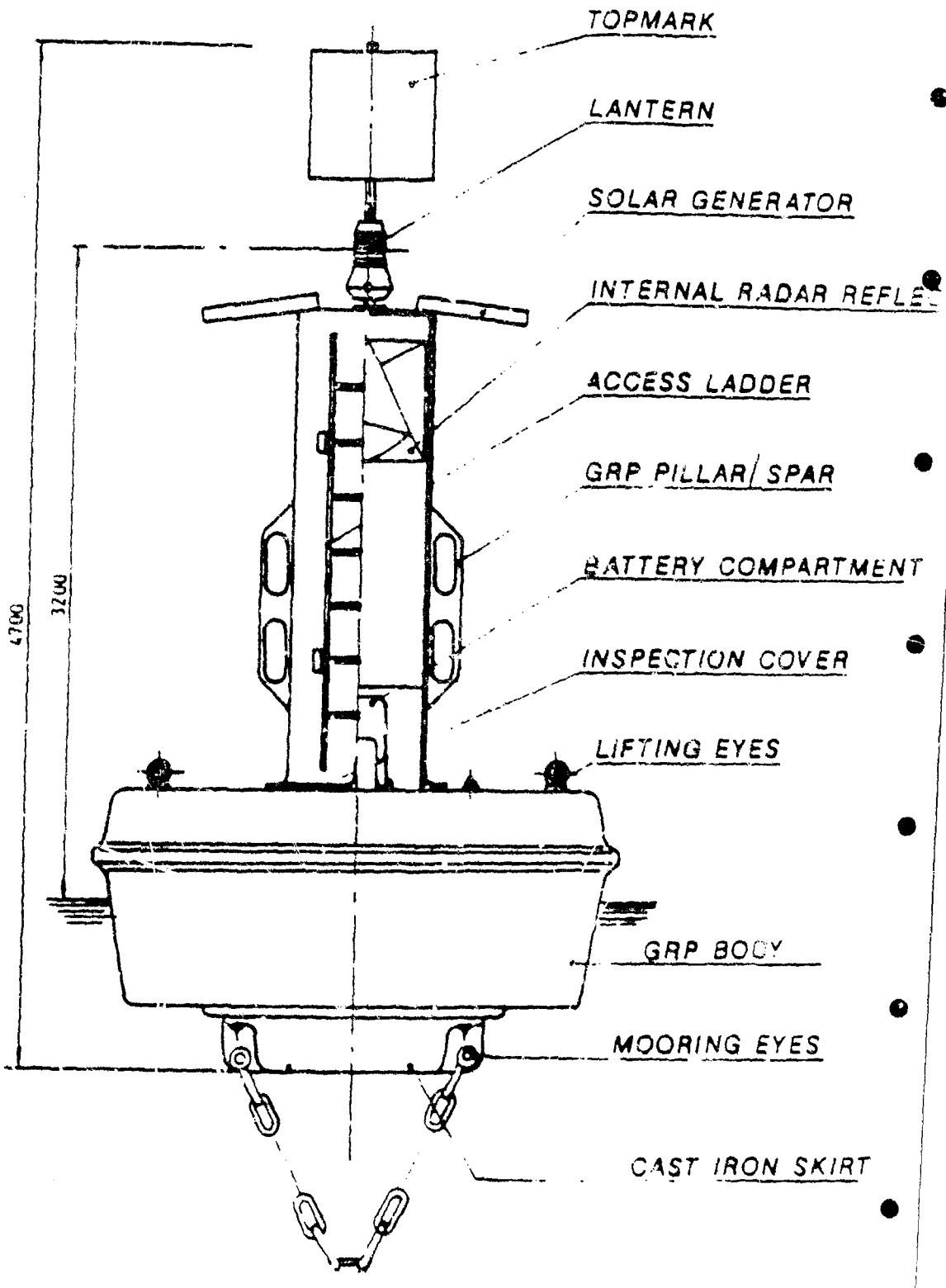

DELPHINE GRP BUOY

TAIL TYPE

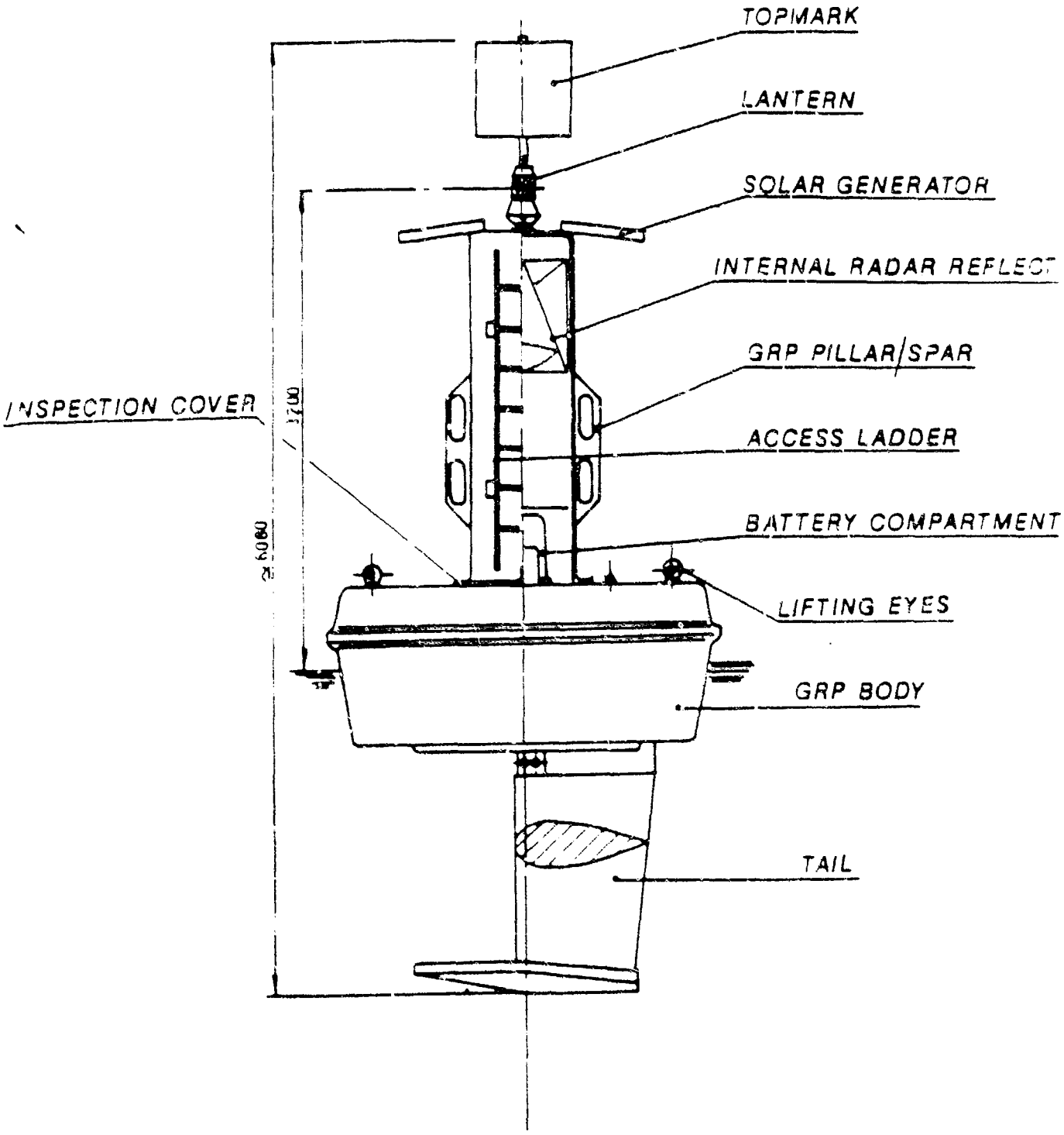

THIS PAGE INTENTIONALLY LEFT BLANK

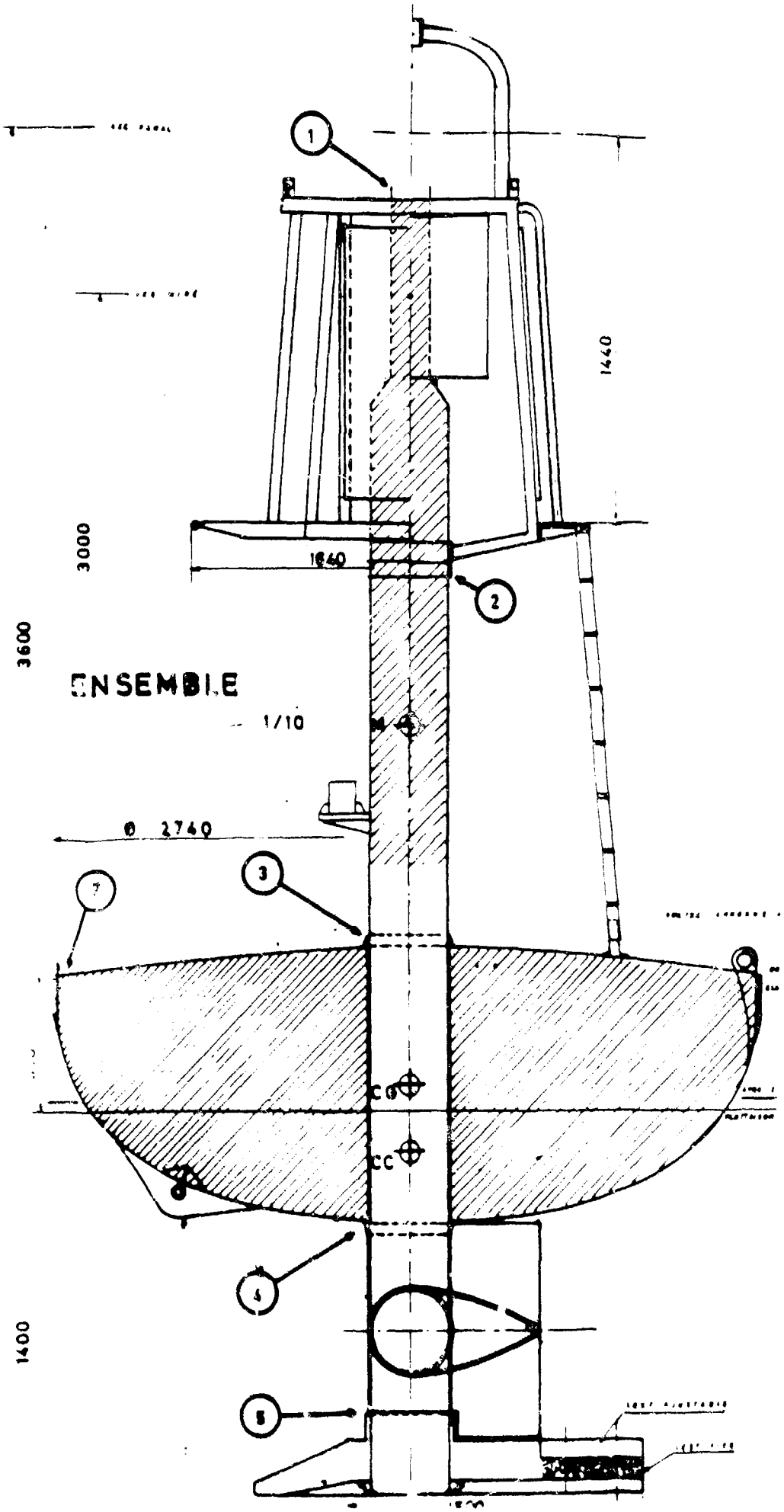

FRANCE MFG. - 1-1

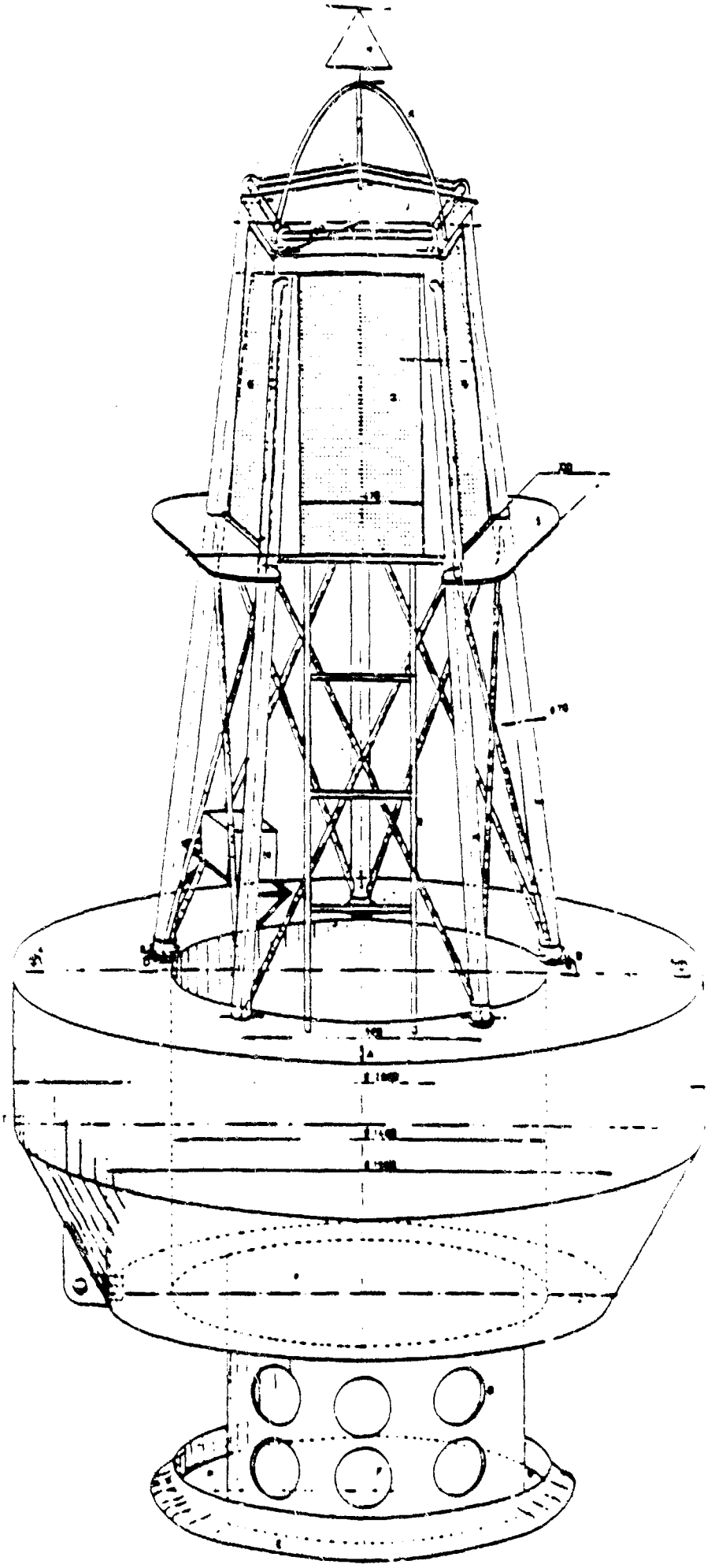

FRANCE MFG - 1-2

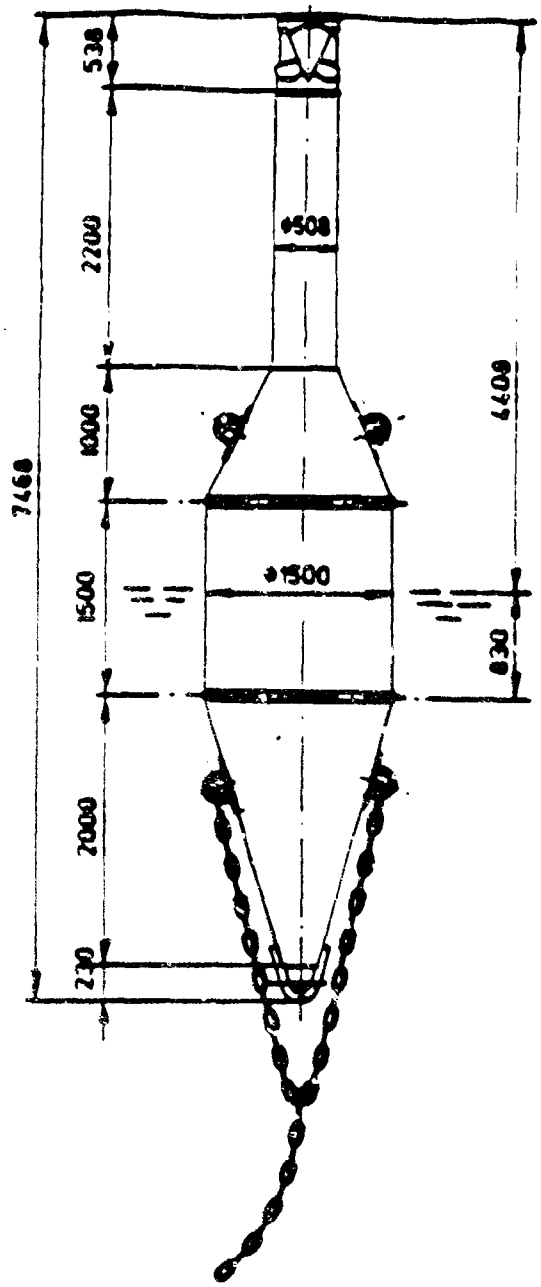

	Datum	Name	Zeichen	
Gezeichnet	25.8.88	Eichhorn		Seezeichenversuchsfeld
Geprüft				
Freigegeben				

Benennung

Spierentonne T 86

Positionsgruppe

Teile-Nr.

Änderungsindex

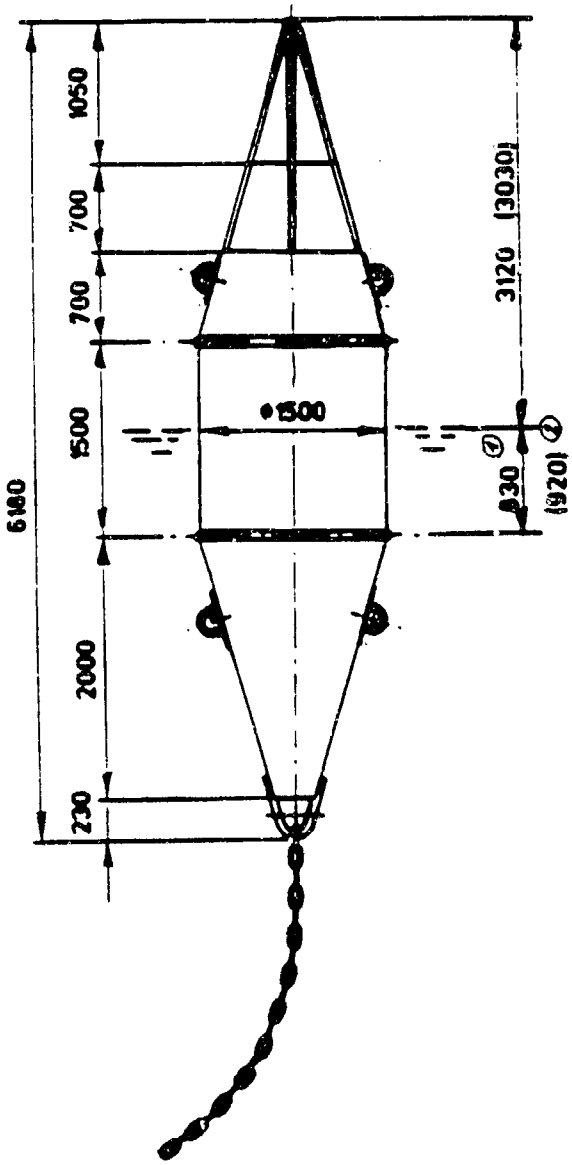

	Datum	Name	Zeichen	Seezeichenversuchsfeld
Gezeichnet	25.8.86	Elsshner		
Geprüft				
Normgepr.				
Benennung	Spitztonne T 86			Zeichnungs-Nr.:
				Ersetzt für:
				Ersetzt durch:

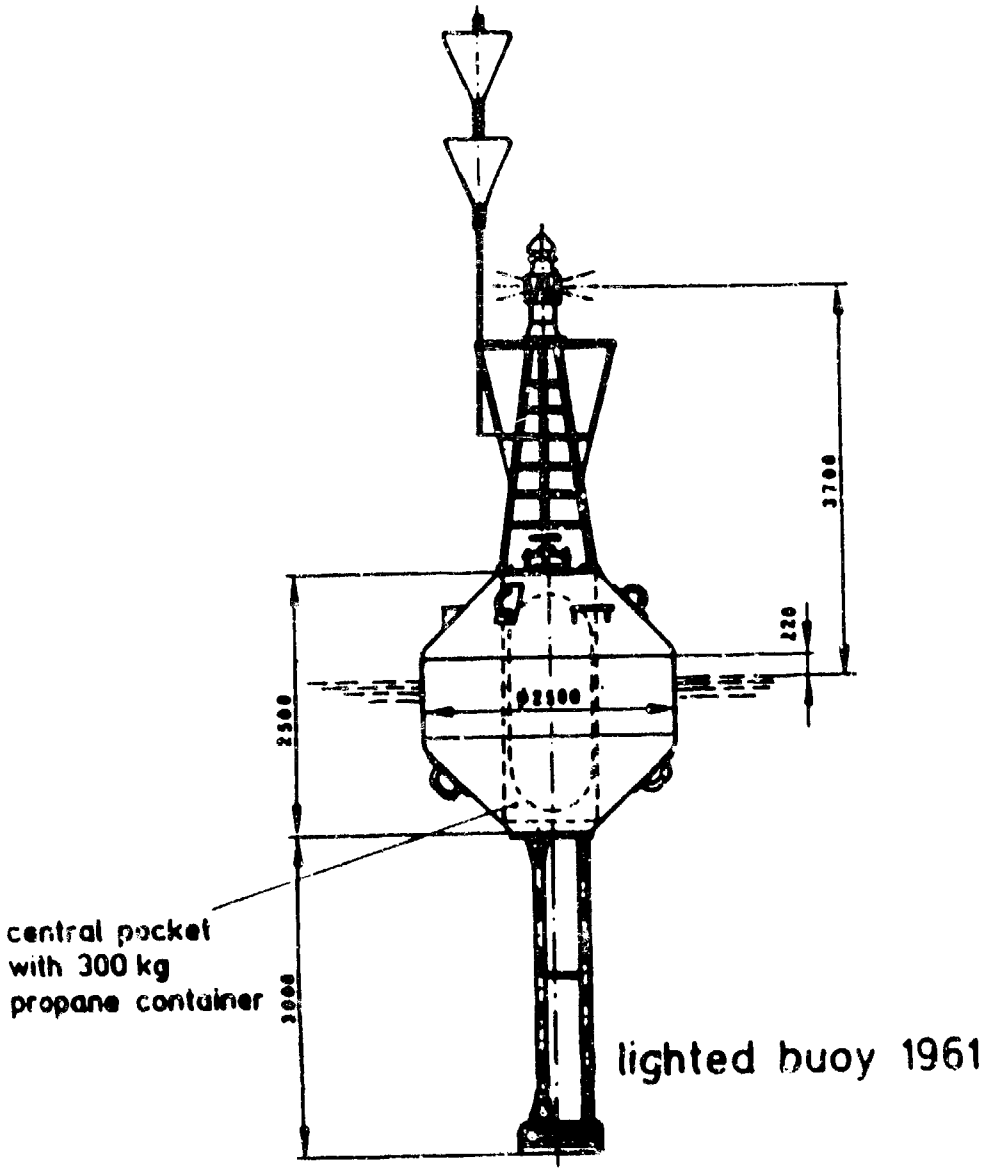
3700
220
Ø2100
2500
2000
central pocket
with 300 kg
propane container
lighted buoy 1961

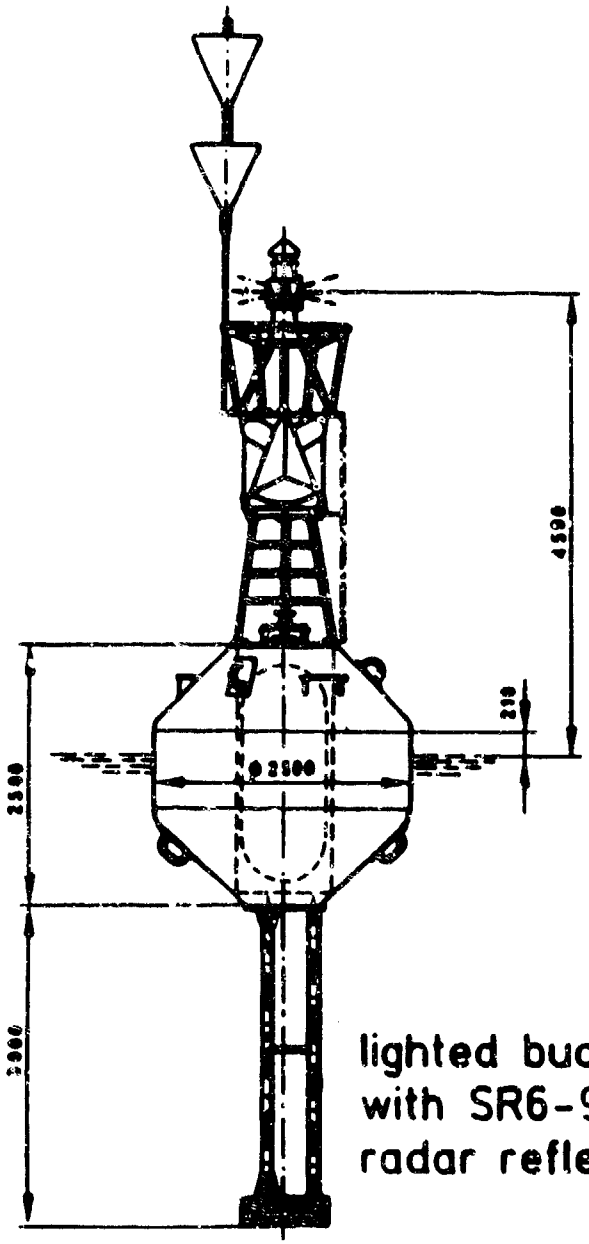

lighted buoy 1961
with SR6-900-
radar reflector

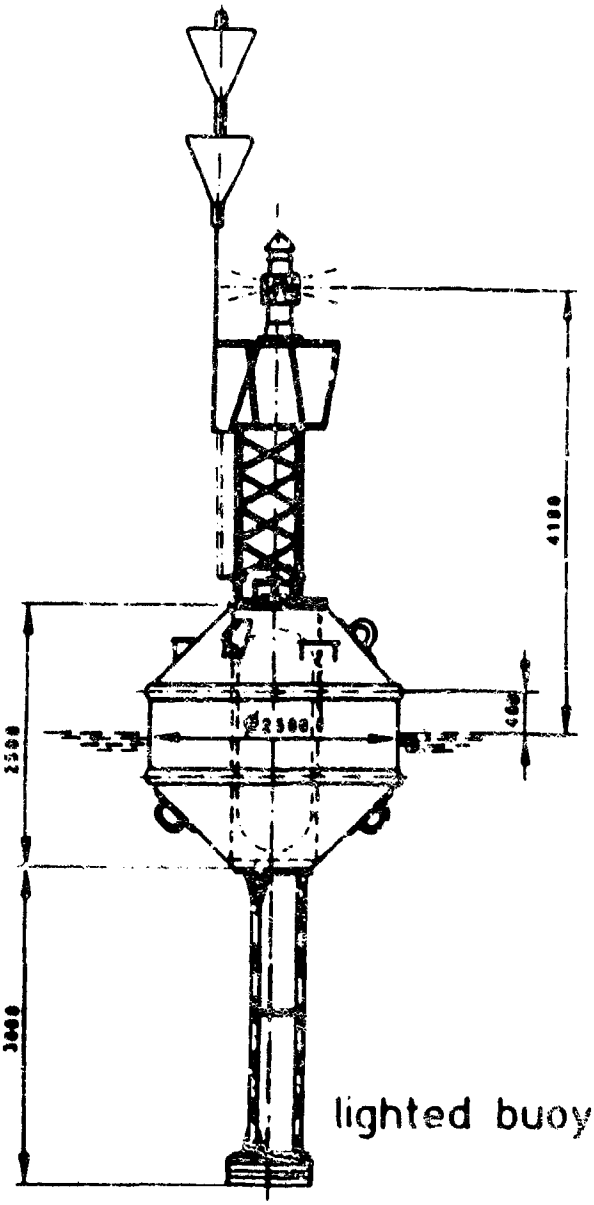

lighted buoy 1972

Laternenträger
Z. Nr. S 924

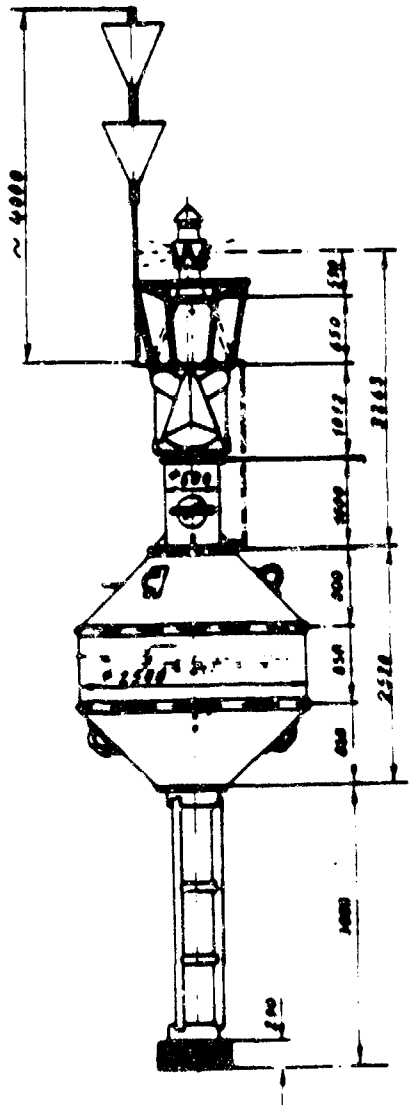

	Datum	Name	Zeichen	Seezeichenversuchsfeld
Gezeichnet	16.9.82	Elschner	El	
Geprüft	16.9.82	"		
Normgepr.				
Maßstab	Benennung	Leuchttonne 81		Zeichnungs-Nr.
				Ersetzt für
				Ersetzt durch

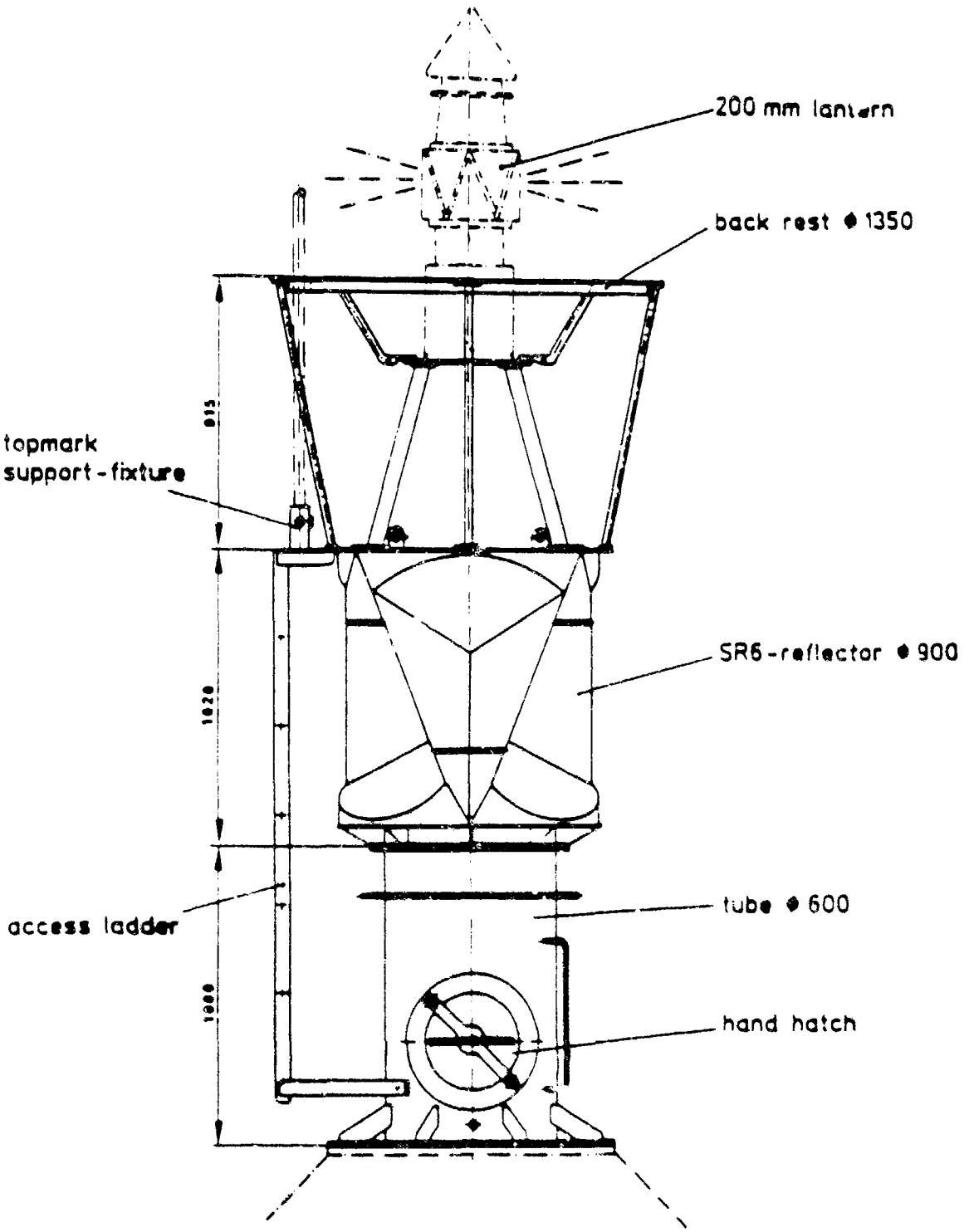

superstructure 1981

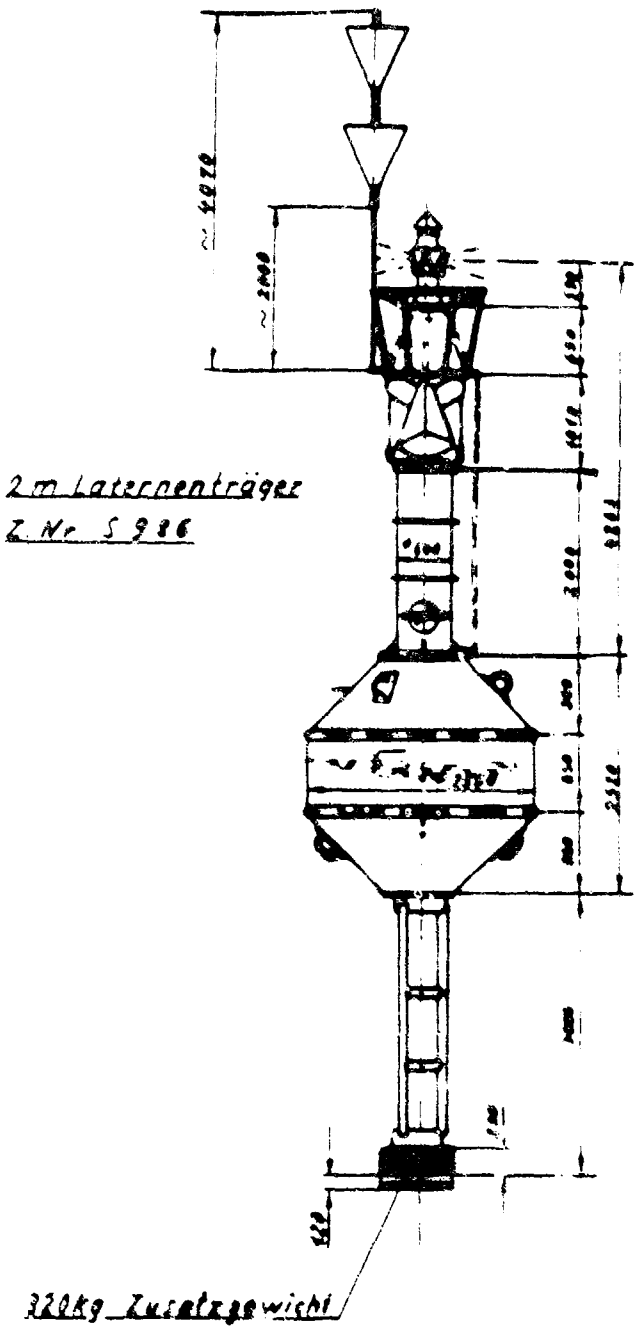

	Datum	Name	Zeichen	
Gezeichnet	16.9.82	Elschner		**Seezeichenversuchsfeld**
Geprüft	16.9.82	"		
Normgeprüft				

Benennung:

Leuchttonne 81
mit
2m hohem Laternenträger

Zeichnungs-Nr.:

Ersetzt für:

Ersetzt durch:

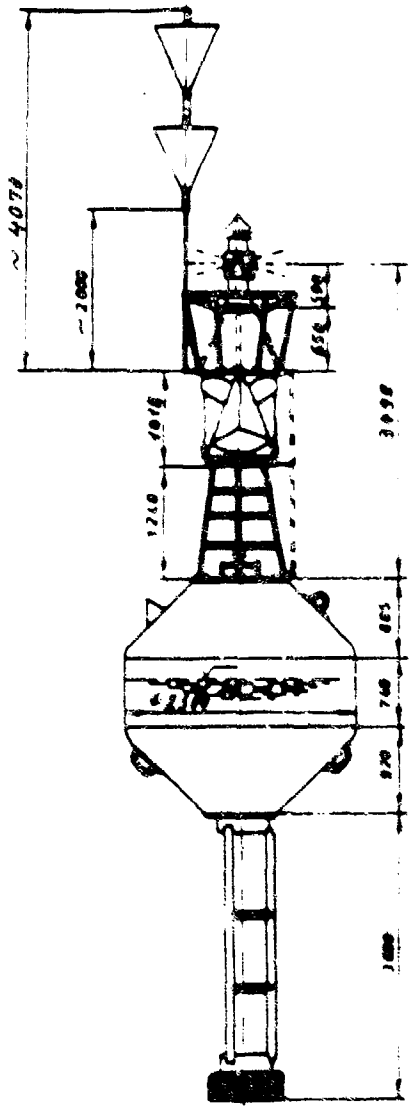

Laternenträger

Z. Nr. S 985

	Datum	Name	Zeichen	
Gezeichnet	16.9.82	Elschner		**Seezeichenversuchsfeld**
Geprüft	16.9.82	"		
Normgep.				
Maßstab	Benennung			

Leuchttonne

Emdener Bauart

mit Radarreflektor SR6 - 900

Zeichnungs-Nr.:

Blatt-Nr.:

Blattanzahl:

Fahrwasserzeichen, Leuchttonne

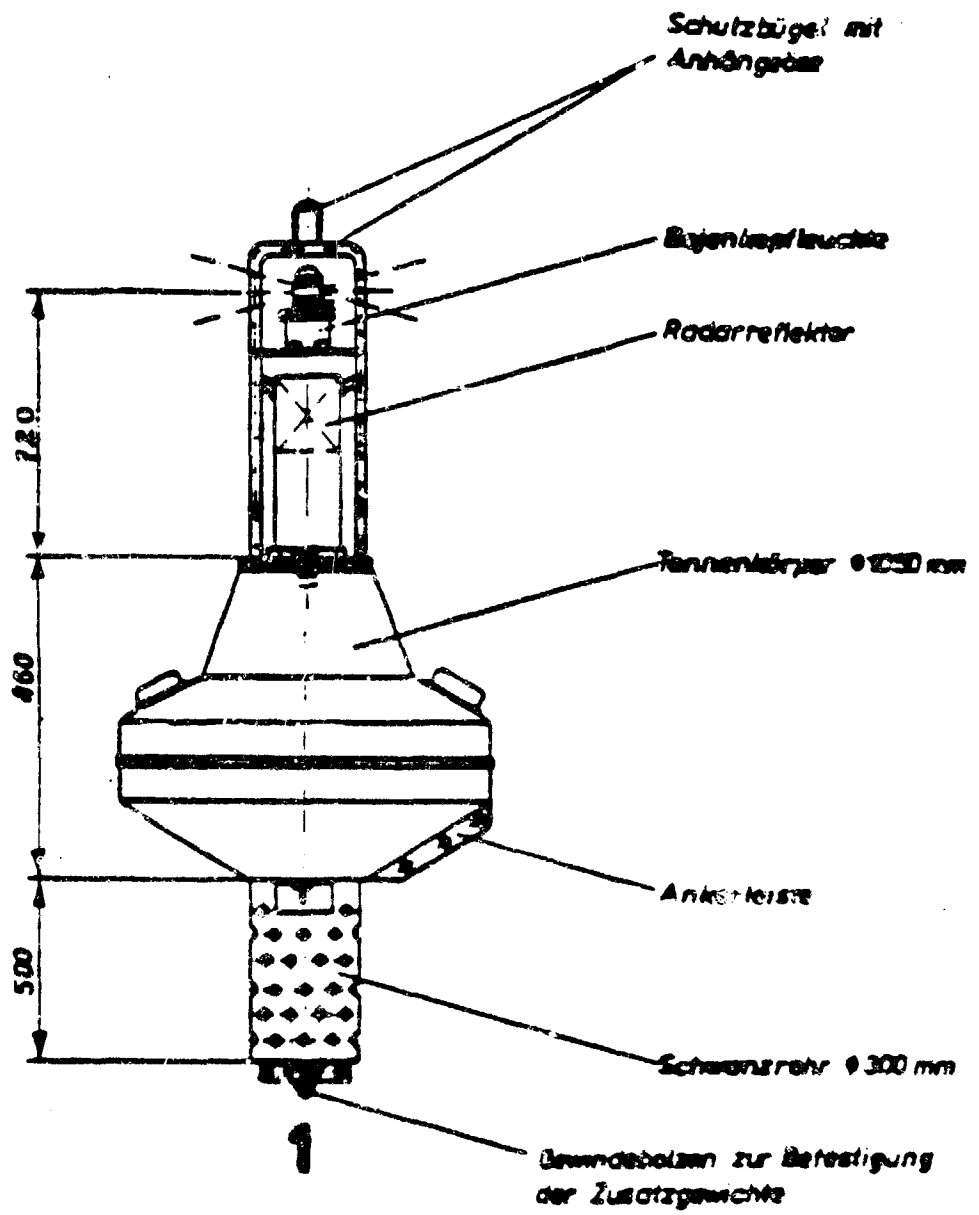

STANDARD BUOY FOR INLAND WATERWAYS

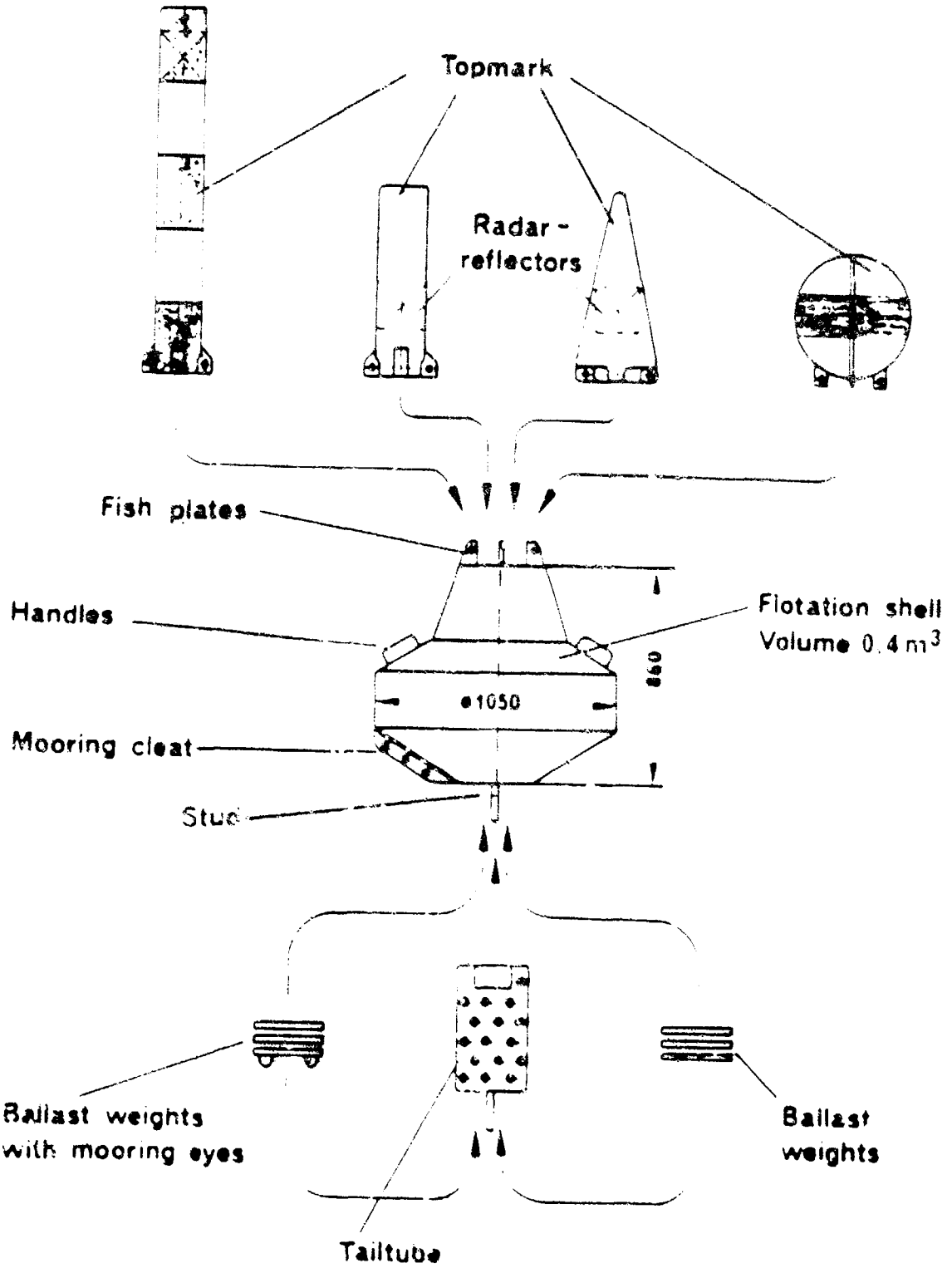

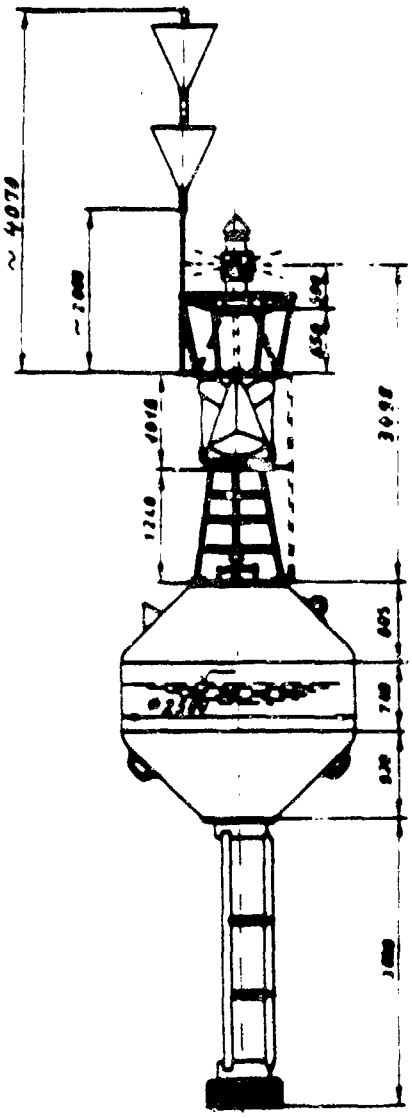

Laternenträger
Z.Nr. S 985

	Datum	Name	Zeichen	
Gezeichnet	16.9.82	Fischner		**Seezeichenversuchsfeld**
Geprüft	16.9.82	"		
Freigegeben				

Maßstab | Benennung

Leuchttonne
Emdener Bauart
mit Radarreflektor SRG-900

Zeichnungs-Nr.:

Ersetzt für:

Ersetzt durch:

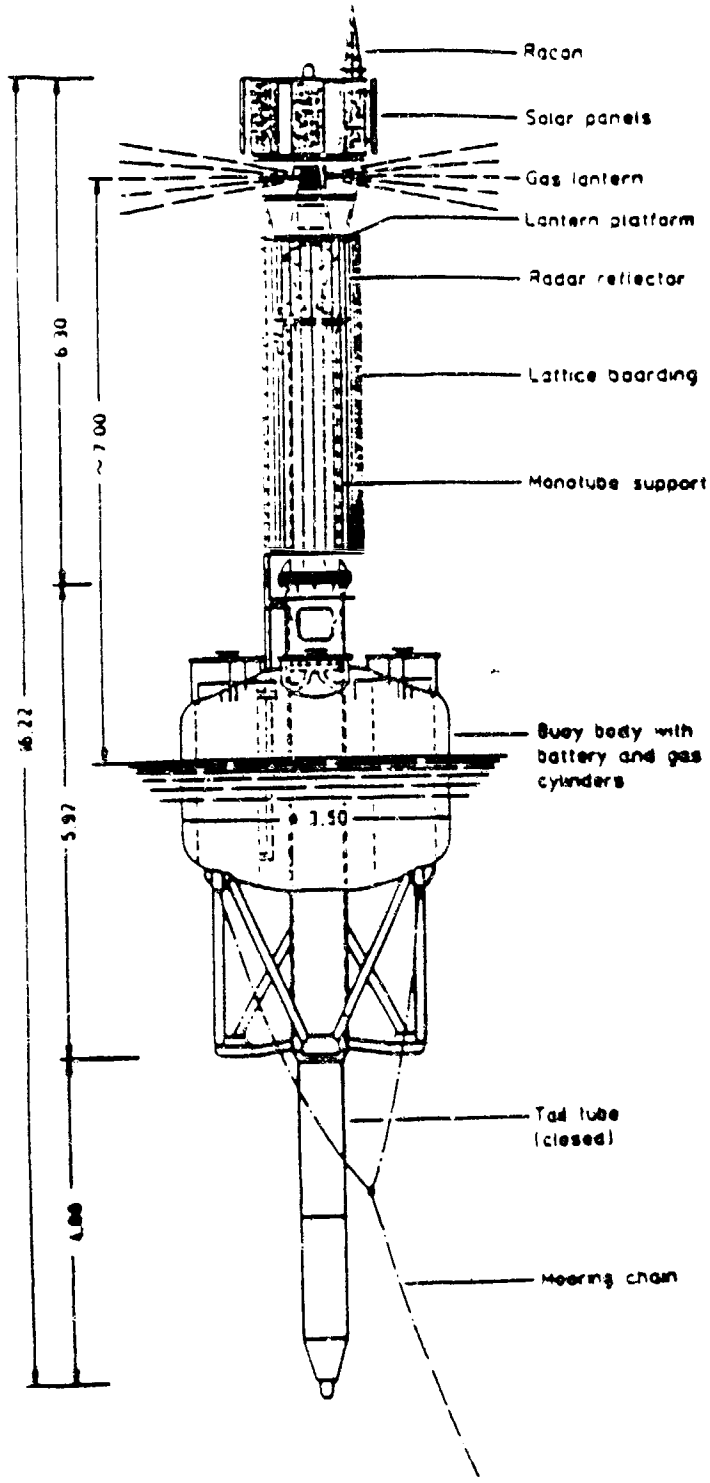

Fig. 6 Modular Buoy, dia 3.5 m (Model 2)

DEEPWATER LIGHT BUOY
TYPE DW 180 G

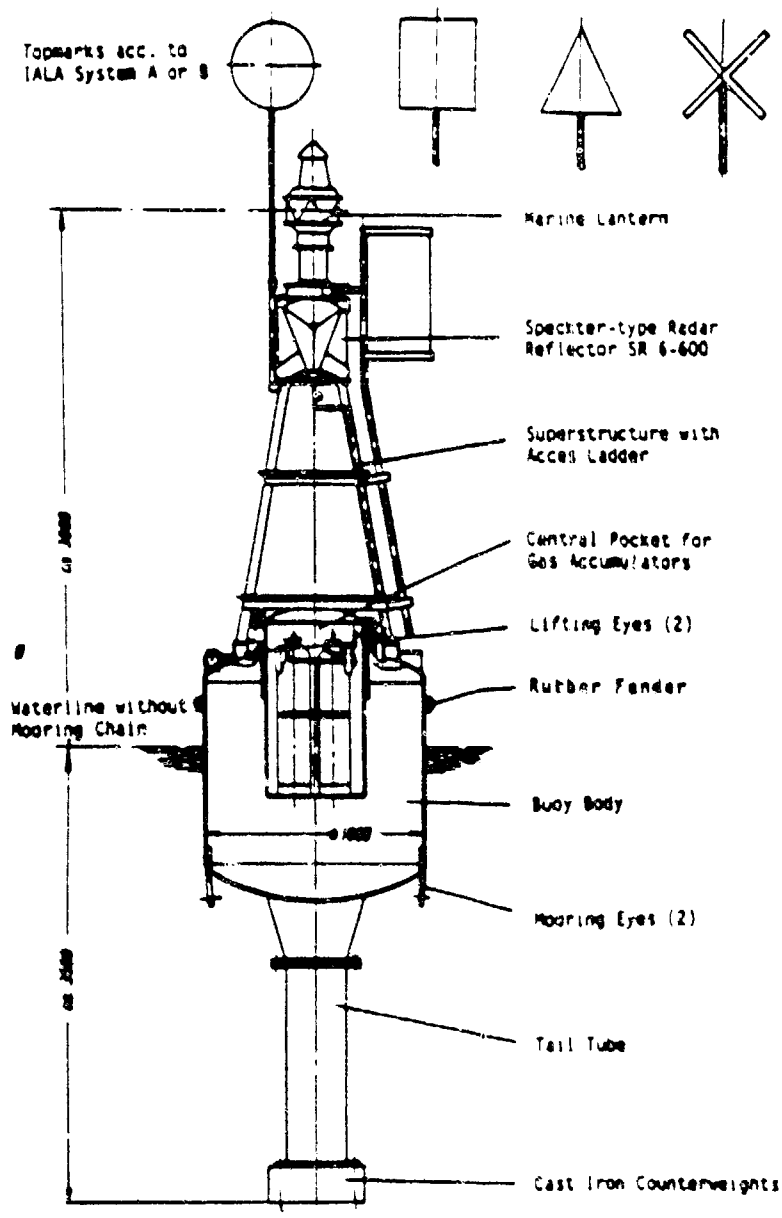

Weight without mooring, appr.	2.900 kg
Displacement per 10 cm of immersion	250 kg
Recommended mooring chain	20-26 mm
Maximum weight of supported moorings	500 kg
Weight of cast iron sinker	600 kg
Maximum lantern size	PE (AE) 200
Maximum power storage weight	300 kg

DEEPWATER LIGHT BUOY
TYPE DW 240 G

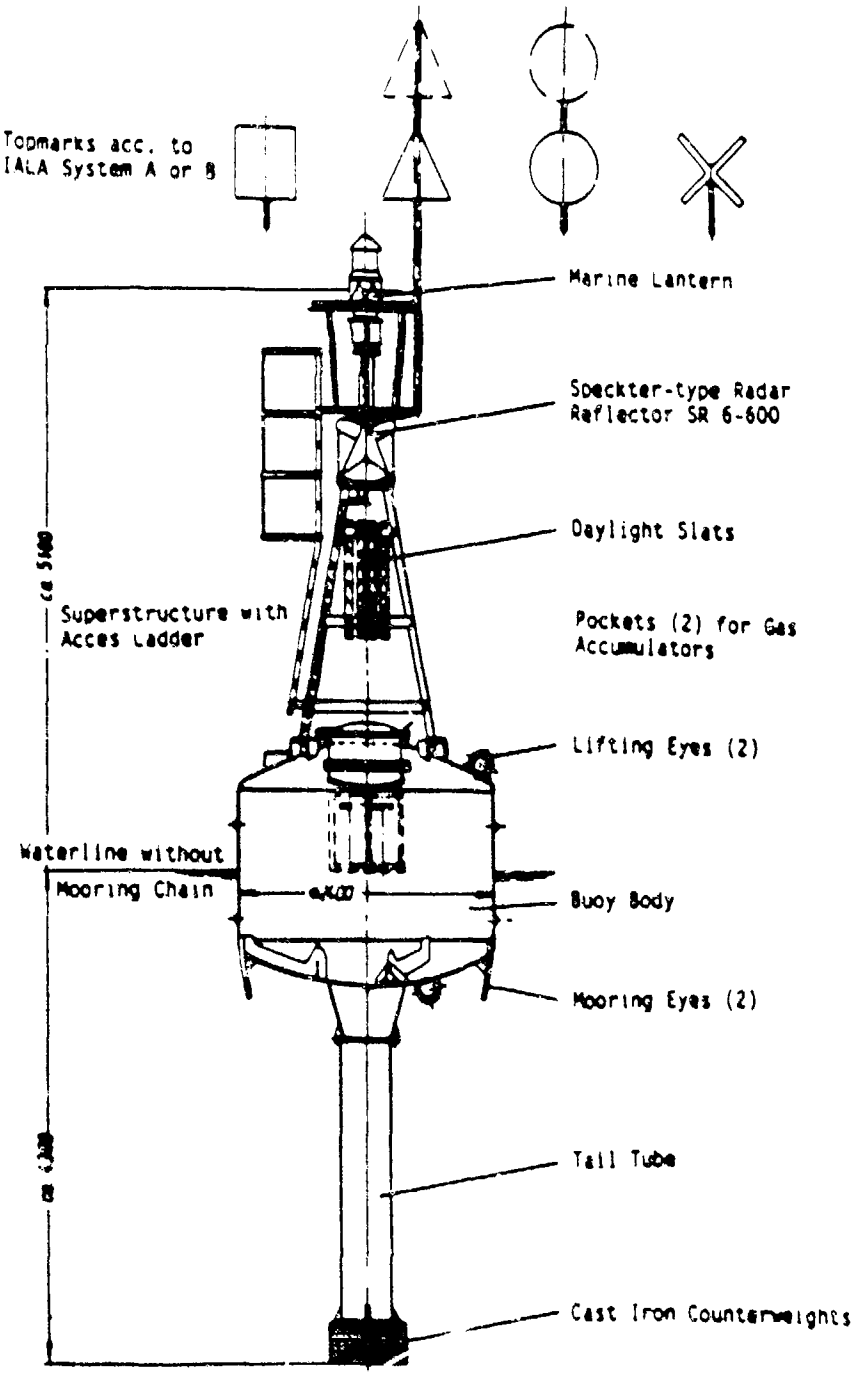

Weight without mooring, appr.	5.000 kg
Displacement per 10 cm of immersion	450 kg
Recommended mooring chain	33-36 mm
Maximum weight of supported moorings	1.000 kg
Weight of cast iron sinker	1.500 kg
Maximum lantern size	PE (AE) 300
Maximum power storage weight	560 kg

DEEPWATER LIGHT BUOY
TYPE DW 260 G

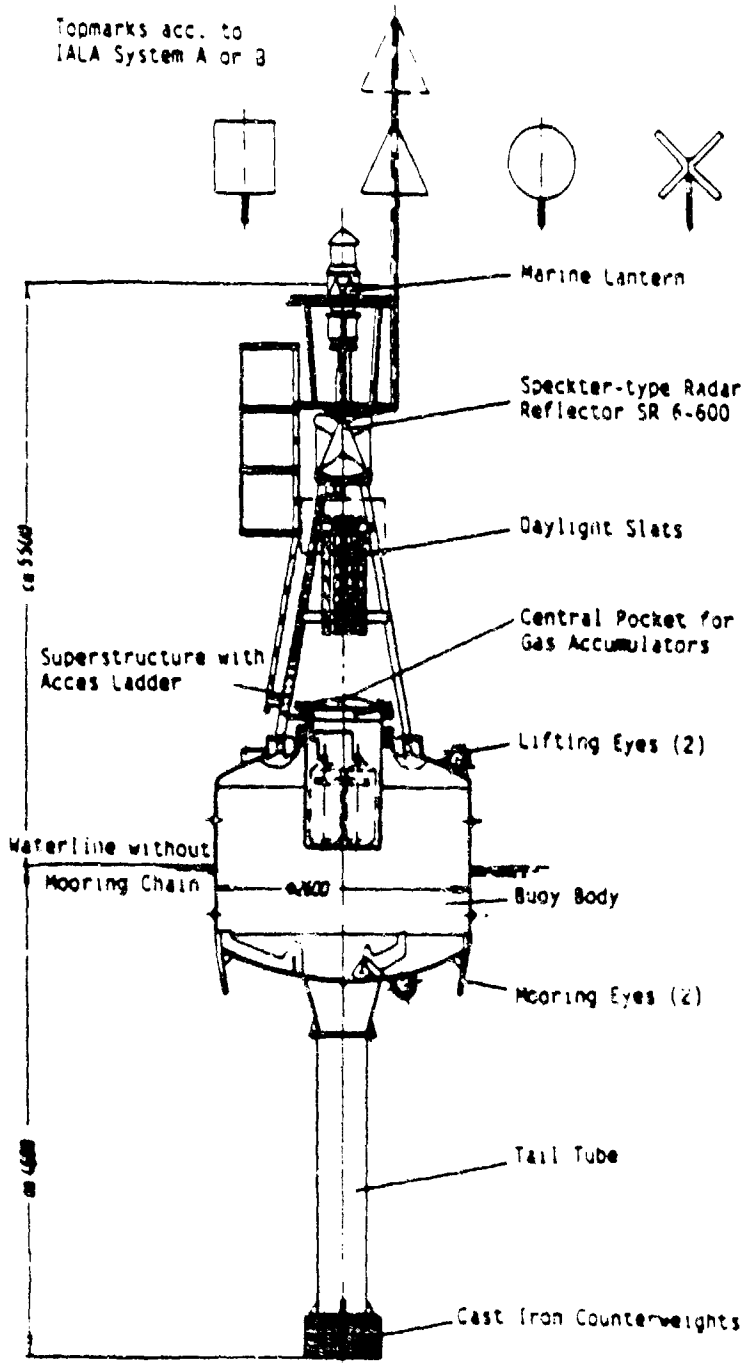

Weight without mooring, appr.	5.100 kg
Displacement per 10 cm of immersion	530 kg
Recommended mooring chain	33-36 mm
Maximum weight of supported moorings	1.500 kg
Weight of cast iron sinker	1.500 kg
Maximum lantern size	PE (AE) 300
Maximum power storage weight	450 kg

DEEPWATER LIGHT BUOY
TYPE DW 280 G

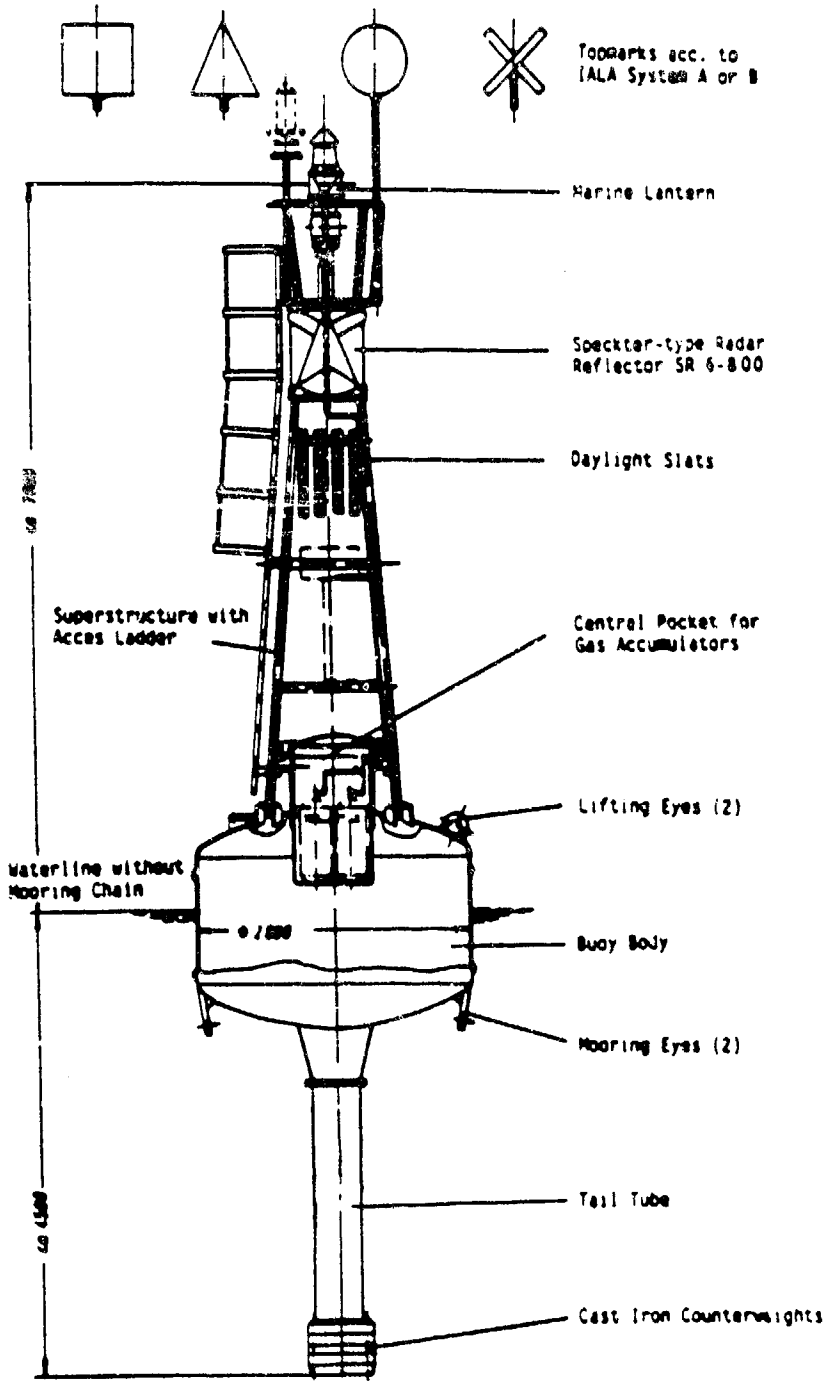

Weight without mooring, appr.	5.500 kg
Displacement per 10 cm of immersion	620 kg
Recommended mooring chain	33-36 mm
Maximum weight of supported moorings	2.000 kg
Weight of cast iron sinker	1.500 kg
Maximum lantern size	PE (AE) 300
Maximum power storage weight	300 kg

SHALLOW WATER LIGHT BUOY
TYPE SW220 G

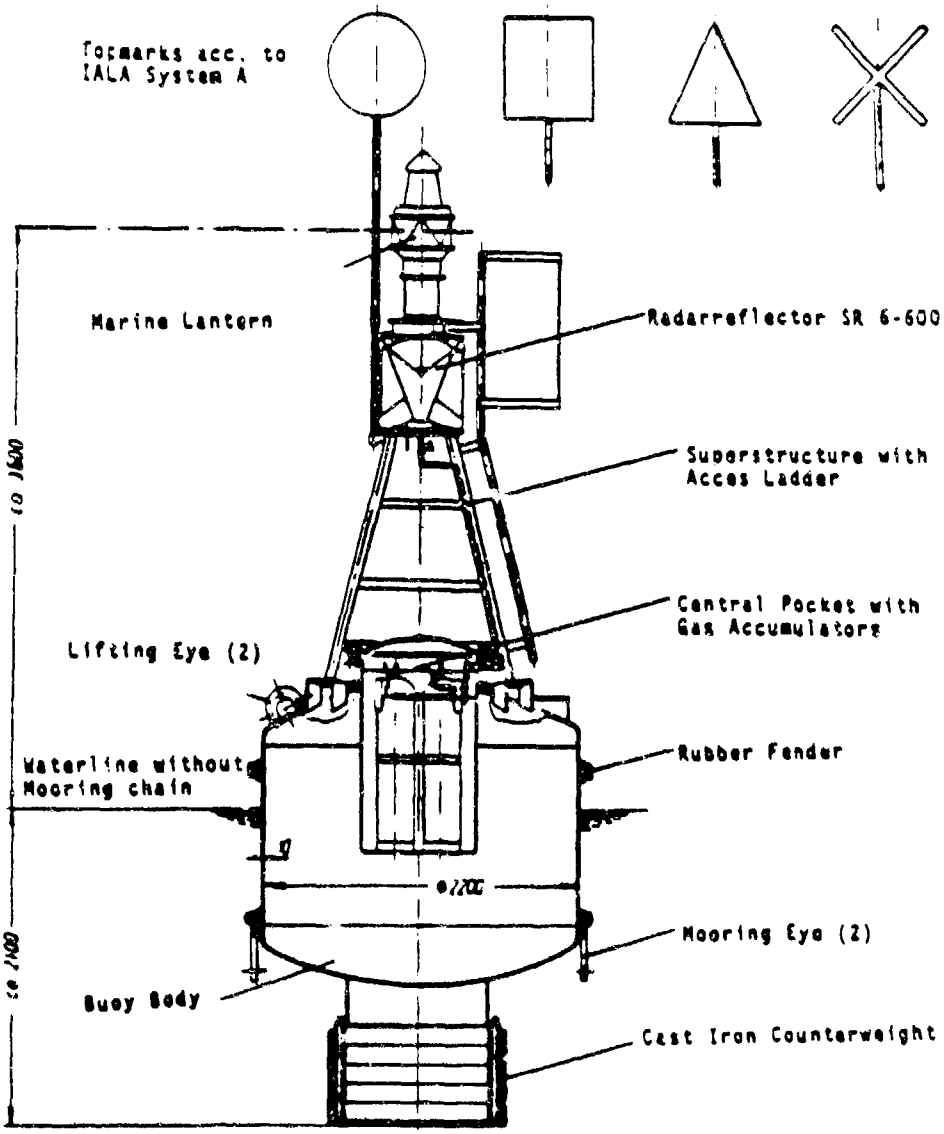

Weight without mooring, appr.	4.600 kg
Displacement per 10 cm of immersion	380 kg
Recommended mooring chain, max.	26-33 mm
Maximum weight of supported moorings	400 kg
Weight of cast iron sinker	1.500 kg
Maximum lantern size	PE (AE)200
Maximum power storage weight	300 kg

SHALLOW WATER LIGHT BUOY
TYPE SW 240 G

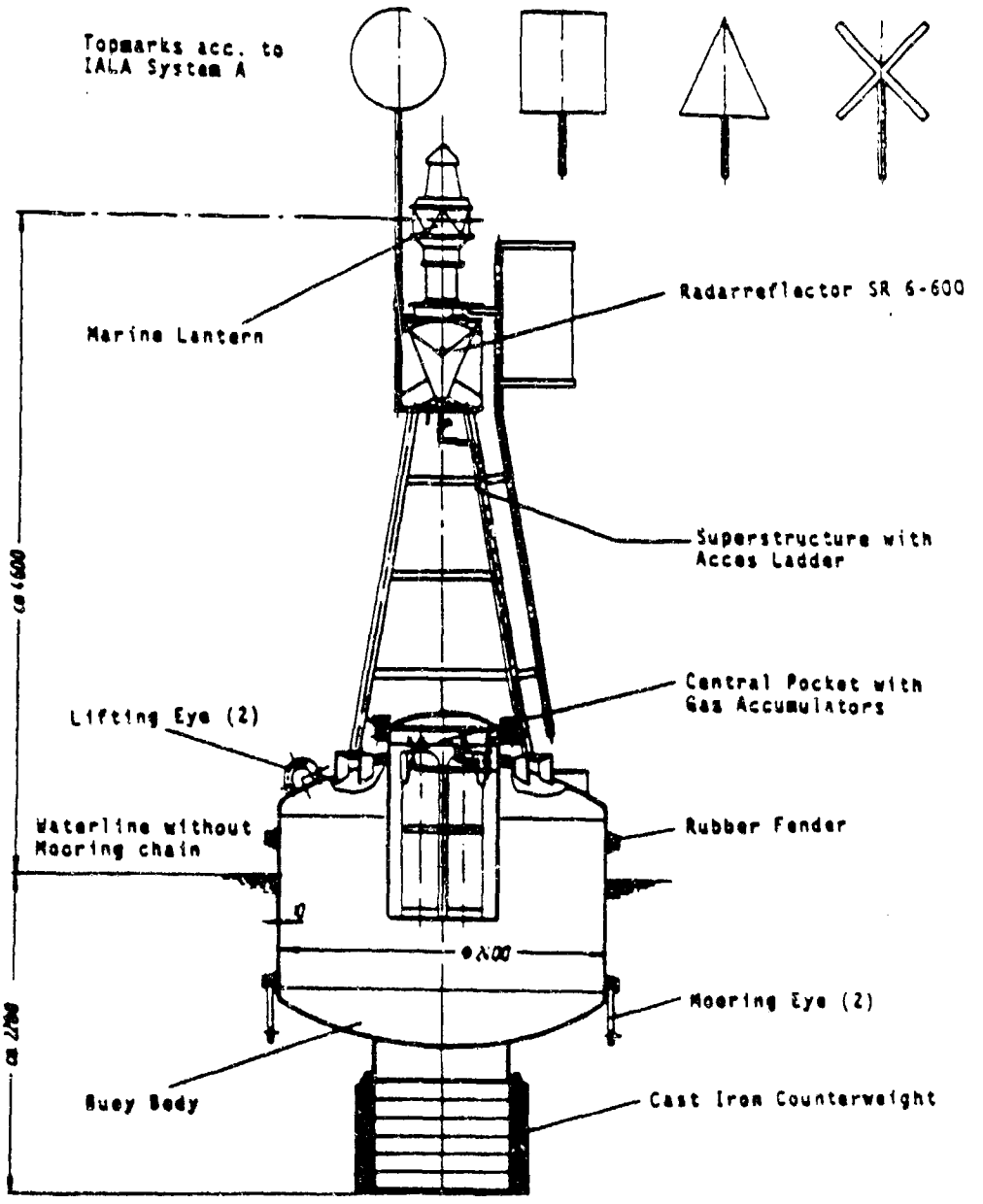

Weight without mooring, appr.	5.500 kg
Displacement per 10 cm of immersion	450 kg
Recommended mooring chain, max.	33-36 mm
Maximum weight of supported moorings	500 kg
Weight of cast iron sinker	1.500 kg
Maximum lantern size	PE (AE) 200
Maximum power storage weight	300 kg

SHALLOW WATER LIGHT BUOY
TYPE SW260 G

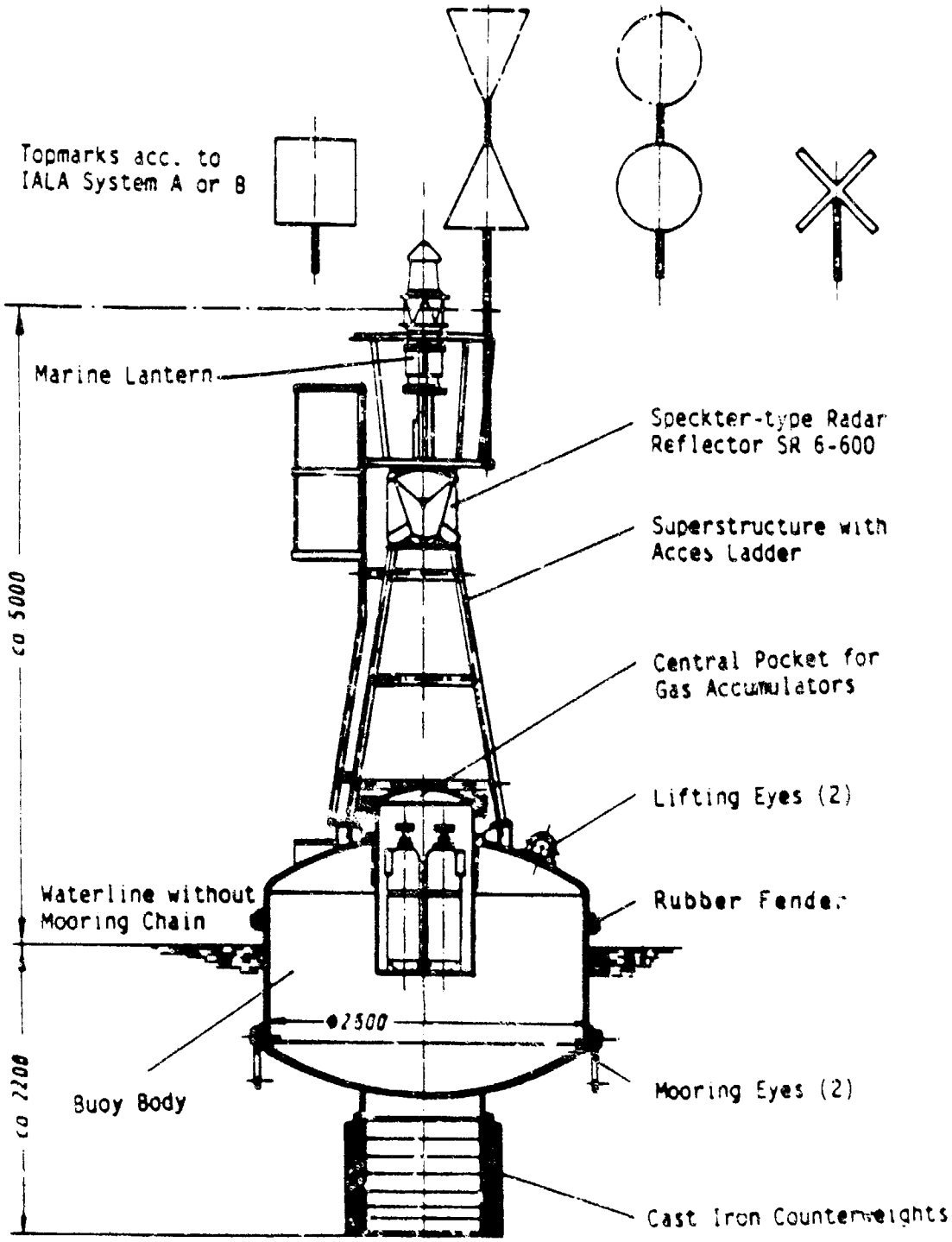

Weight without mooring, appr.	5.800 kg
Displacement per 10 cm of immersion	530 kg
Recommended mooring chain	33-36 mm
Maximum weight of supported moorings	600 kg
Weight of cast iron sinker	1.500 kg
Maximum lantern size	PE (AFI) 300
Maximum power storage weight	300 kg

SHALLOW WATER LIGHT BUOY
TYPE SW 300 G

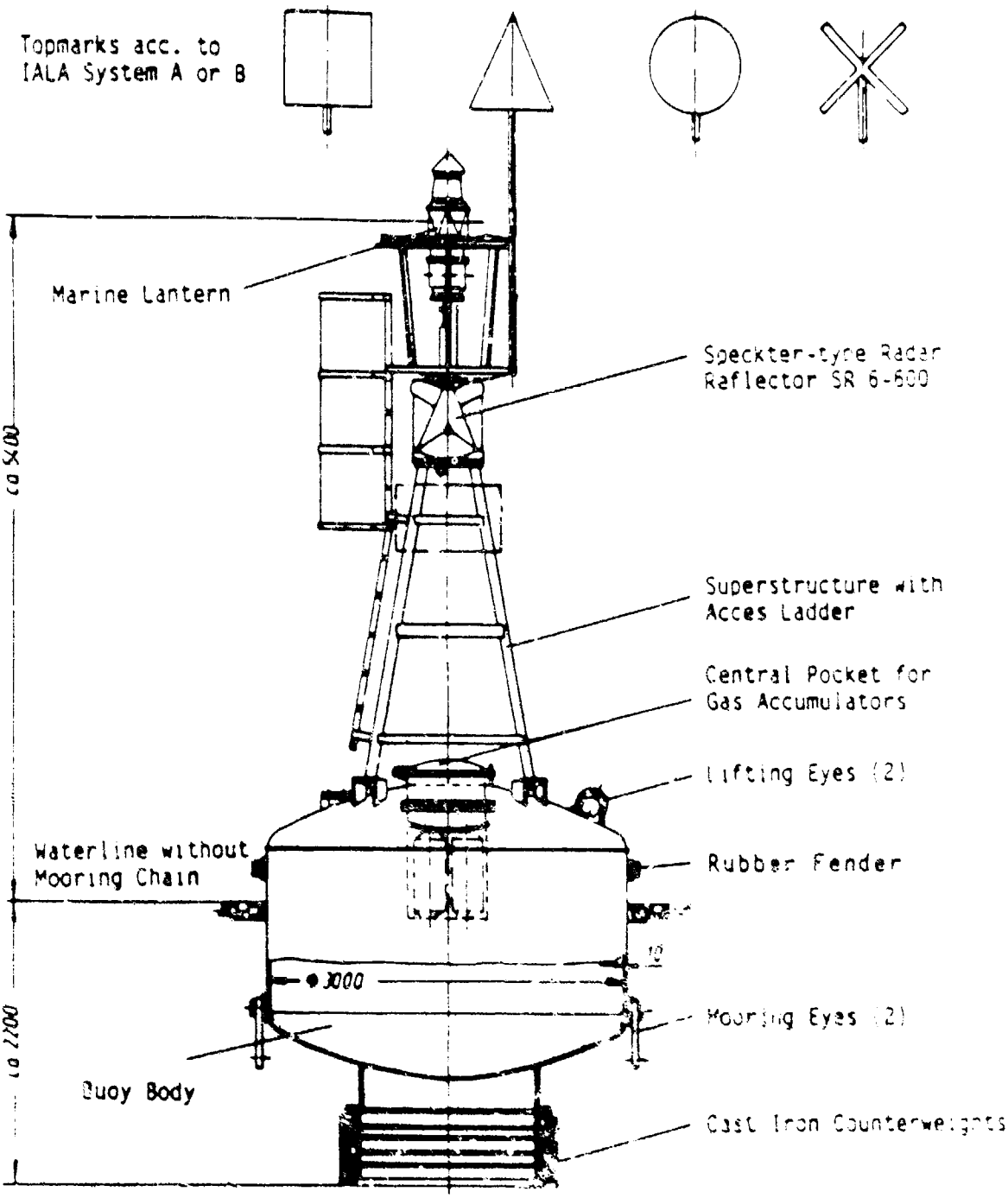

Weight without mooring, appr.	6.800 kg
Displacement per 10 cm of immersion	710 kg
Recommended mooring chain	33-42 mm
Maximum weight of supported moorings	1.200 kg
Weight of cast iron sinker	2.000 kg
Maximum lantern size	DE AE 300
Maximum power storage weight	300 kg

SHALLOW WATER LIGHT BUOY
TYPE SW 160 E

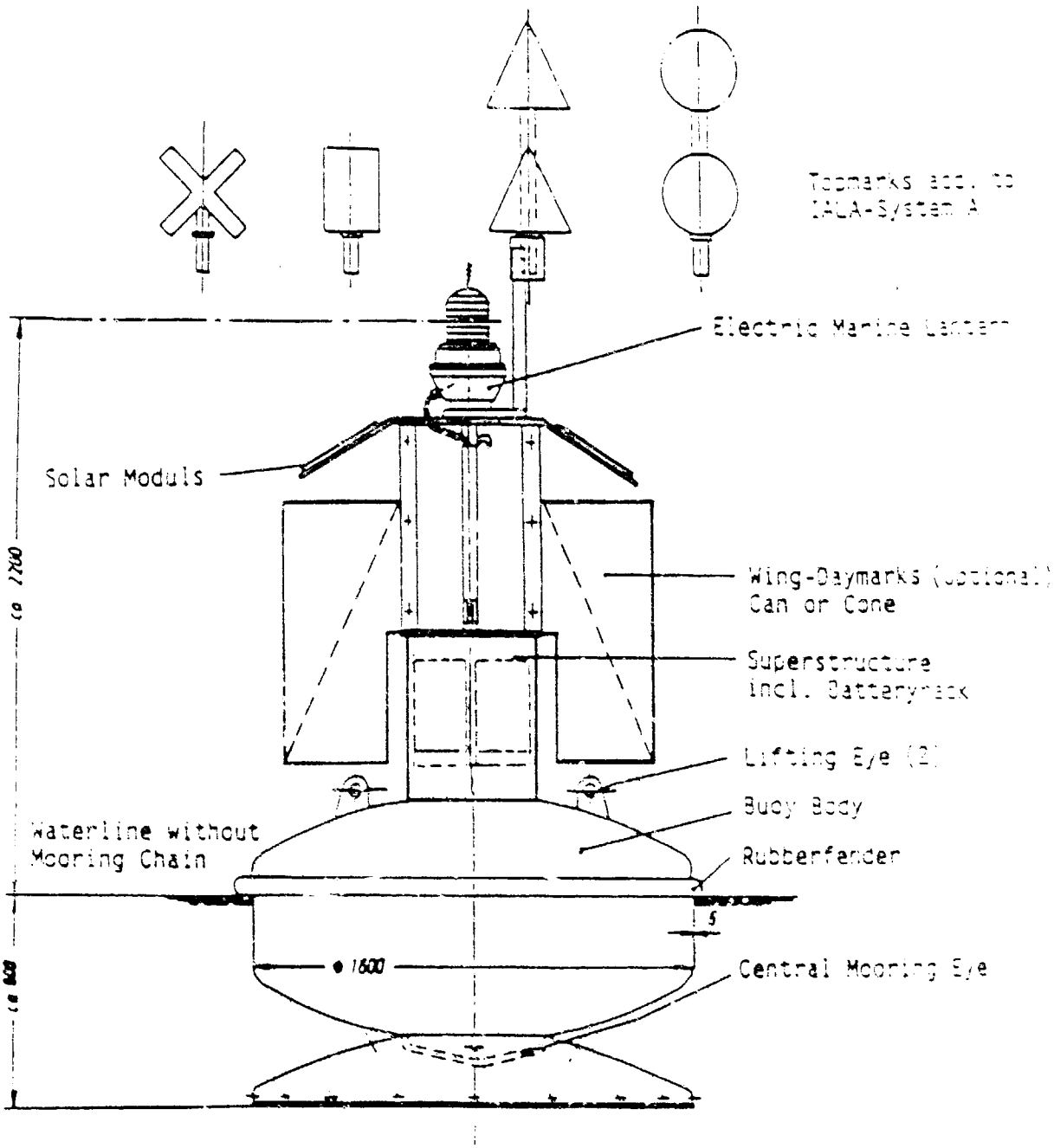

Weight without mooring	appr.	750 kg
Displacement per 10 cm of immersion		200 kg
Recommended mooring chain		16 - 23 mm
Maximum weight of supported moorings		100 kg
Weight of cast iron sinker		350 kg
Maximum lantern size		EE 155
Maximum power storage weight	max.	70 kg

SHALLOW WATER LIGHT BUOY
TYPE SW 200 E

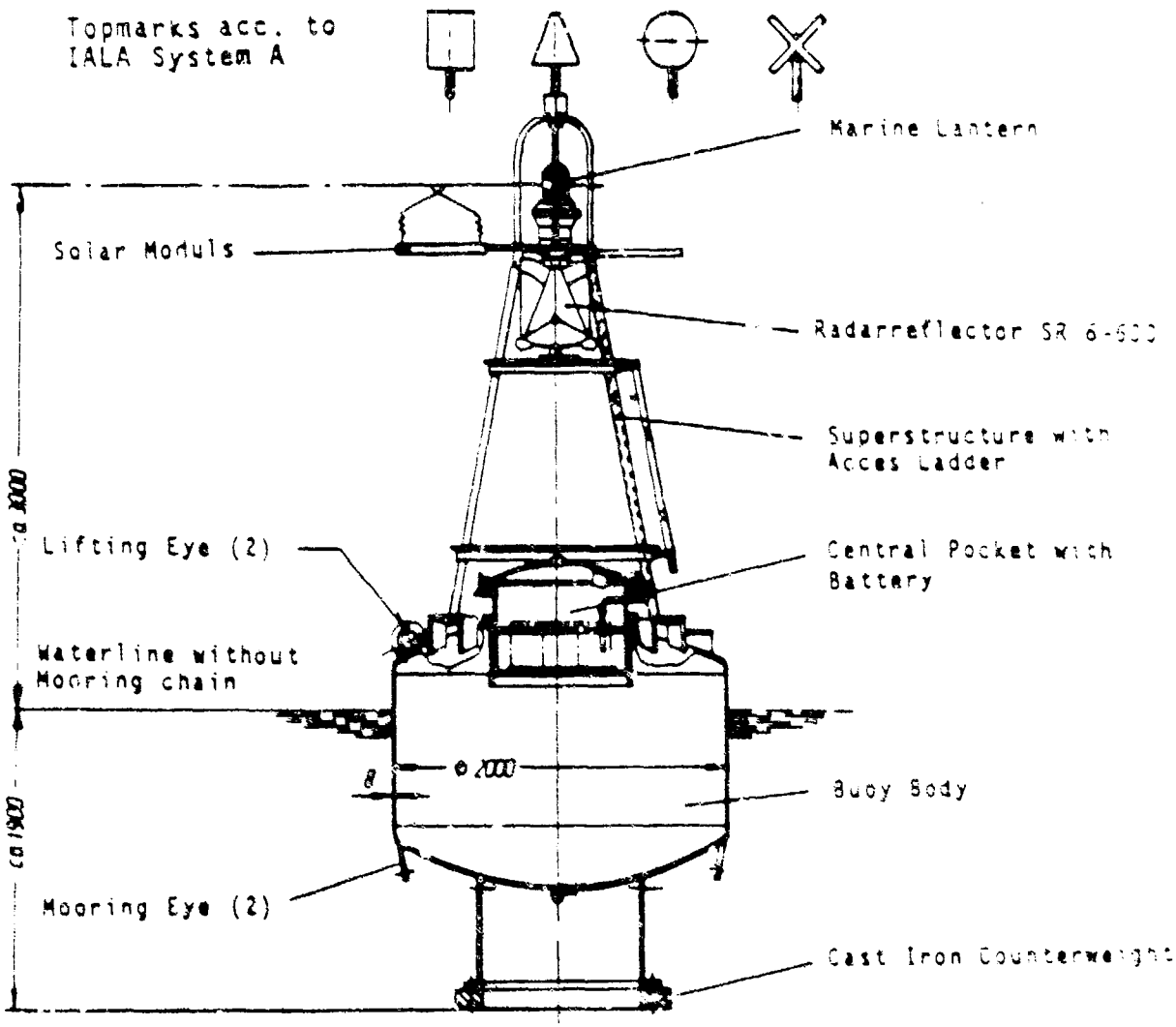

Weight without mooring	2.600 kg
Displacement per 10 cm of immersion	314 kg
Recommended mooring chain	20-26 mm
Maximum weight of supported moorings	250 kg
Weight of cast iron sinker	1.000 kg
Maximum lantern size	EE 250
Maximum power storage weight	70 kg

SHALLOW WATER LIGHT BUOY
TYPE SW220E

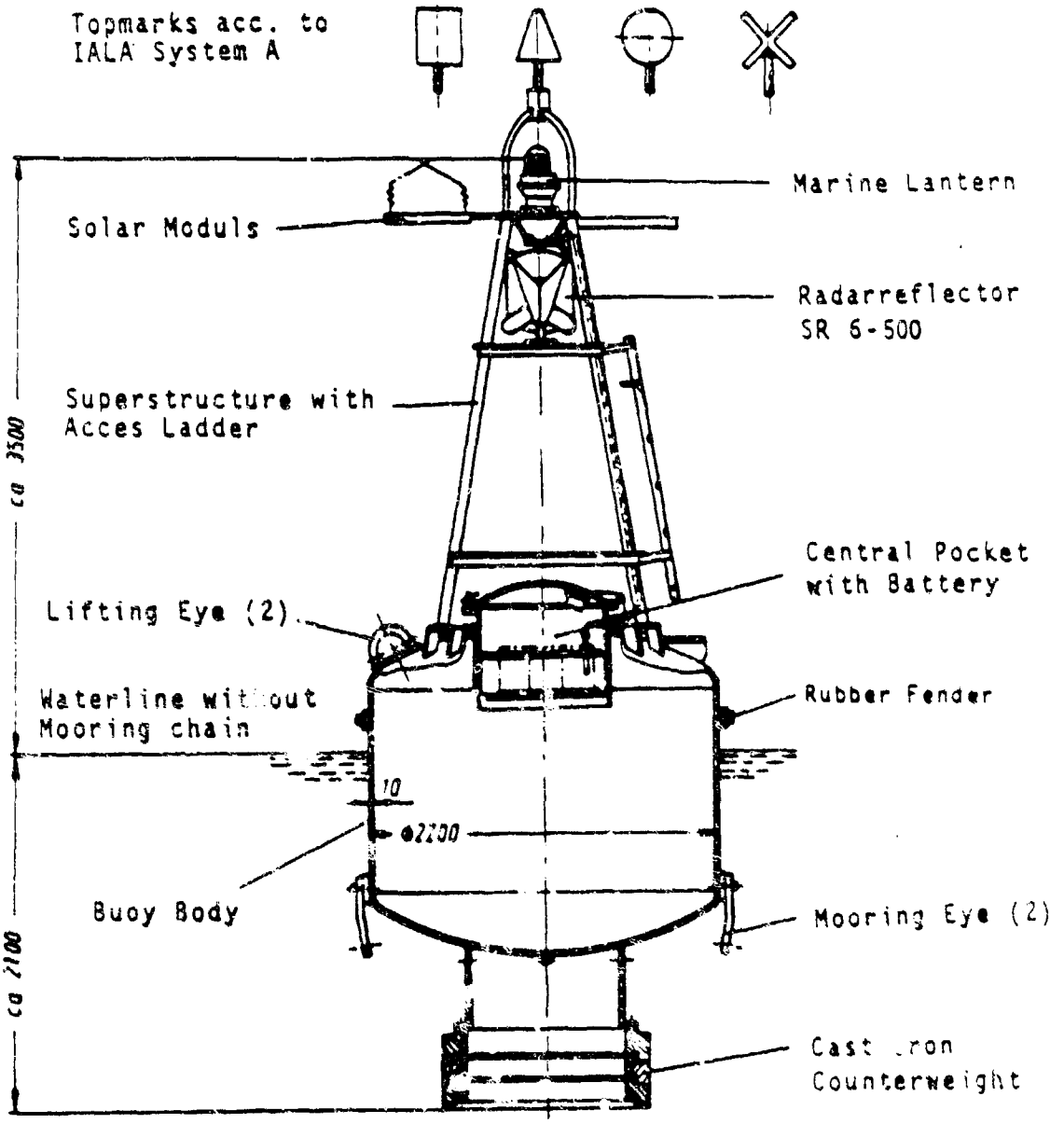

Weight without mooring	4.000 kg
Displacement per 10 cm of immersion	380 kg
Recommended mooring chain	23-30 mm
Maximum weight of supported moorings	700 kg
Weight of cast iron sinker	900 kg
Maximum lantern size	EE 250
Maximum power storage weight	125 kg

SHALLOW WATER LIGHT BUOY
TYPE SW260 E

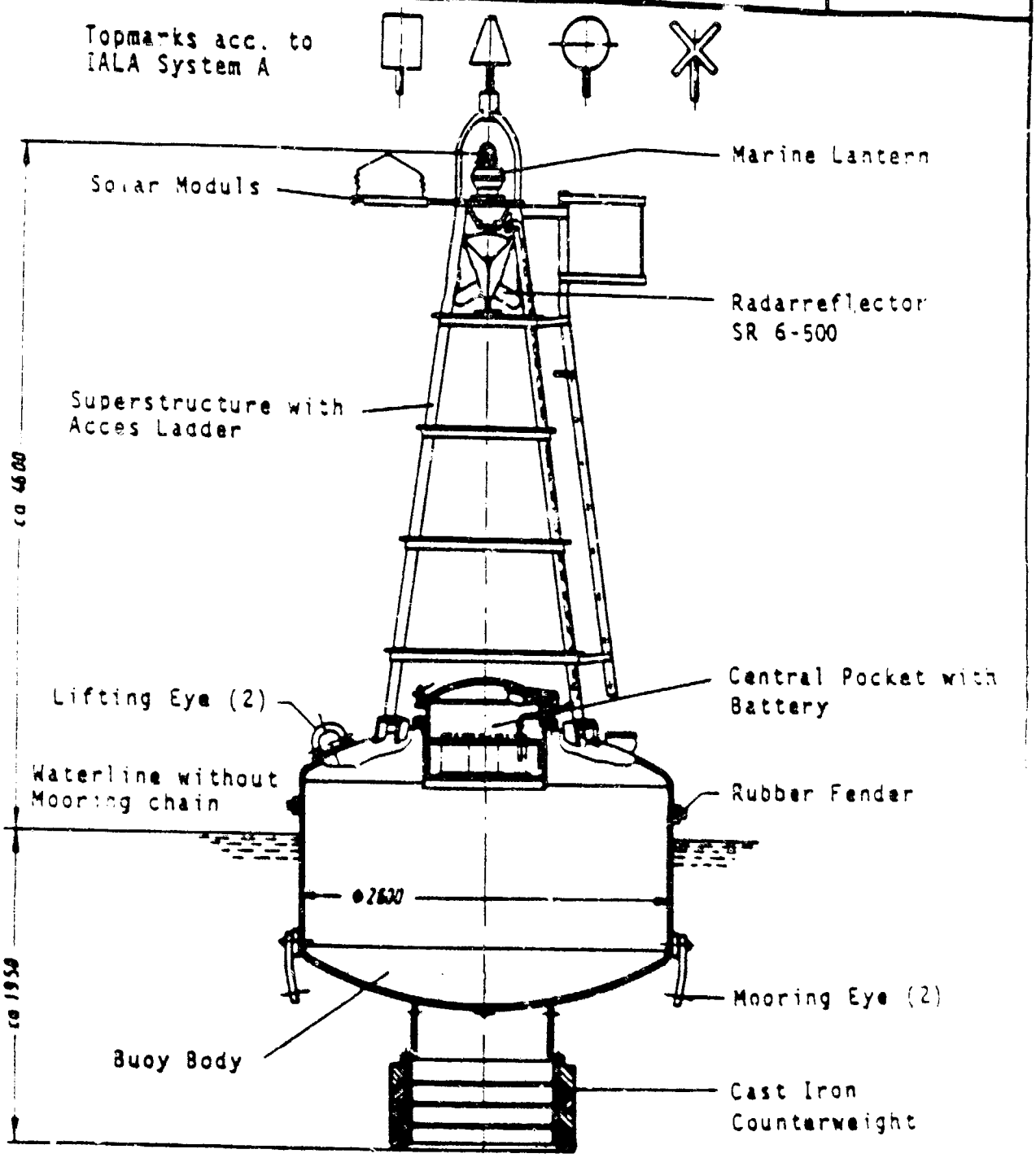

Weight without mooring	4.700 kg
Displacement per 10 cm of immersion	530 kg
Recommended mooring chain	26-33 mm
Maximum weight of supported moorings	1.000 kg
Weight of cast iron sinker	1.200 kg
Maximum lantern size	EE 250
Maximum power storage weight	125 kg

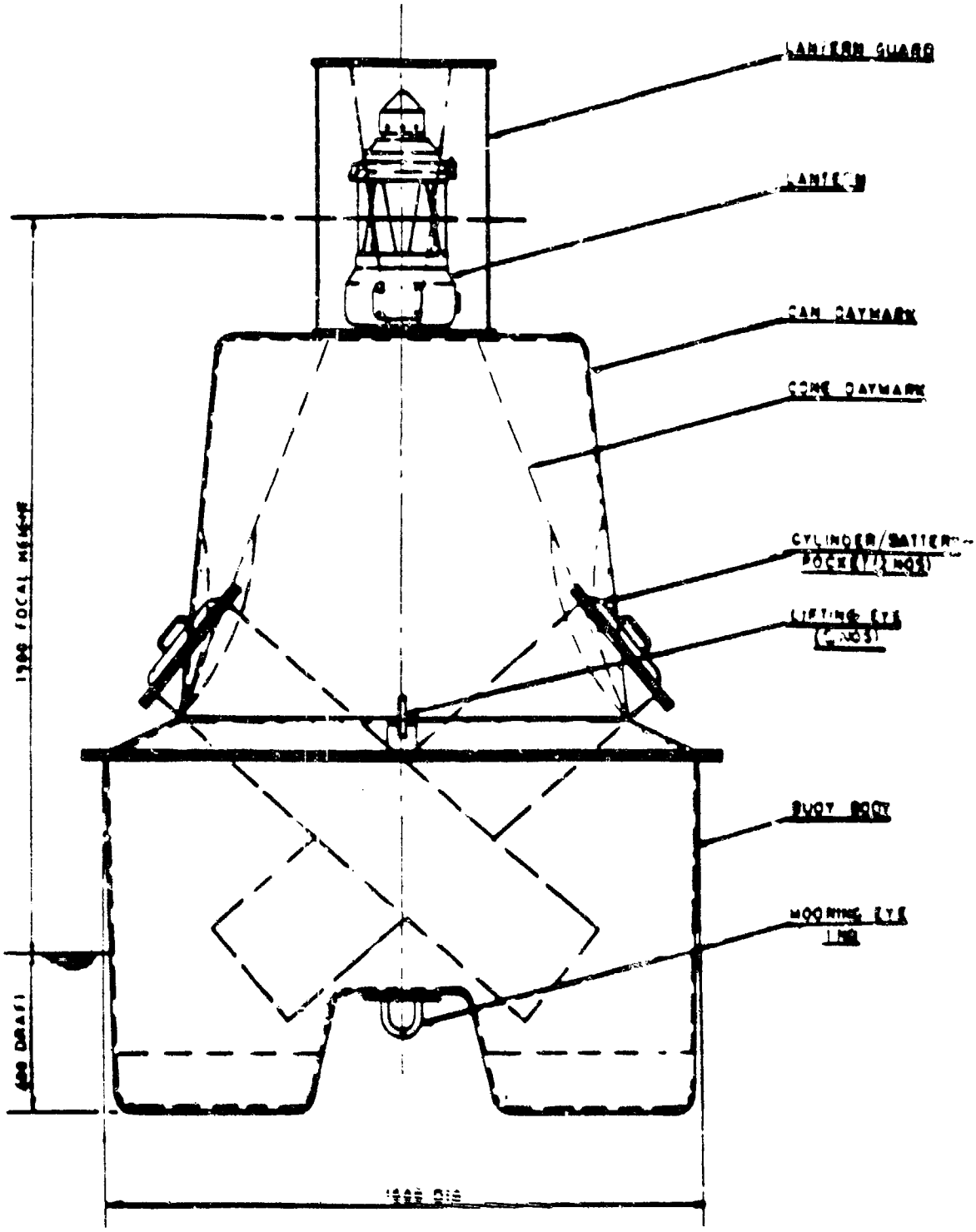
LANTERN GUARD
LANTERN
CAN DAYMARK
CONE DAYMARK
CYLINDER/BATTERY POCKET (1/2 NOS)
LIFTING EYE (2 NOS)
BUOY BODY
MOORING EYE (1 NO)
1300 FOCAL HEIGHT
600 DRAFT
1800 DIA

INDIA MFG 1-1

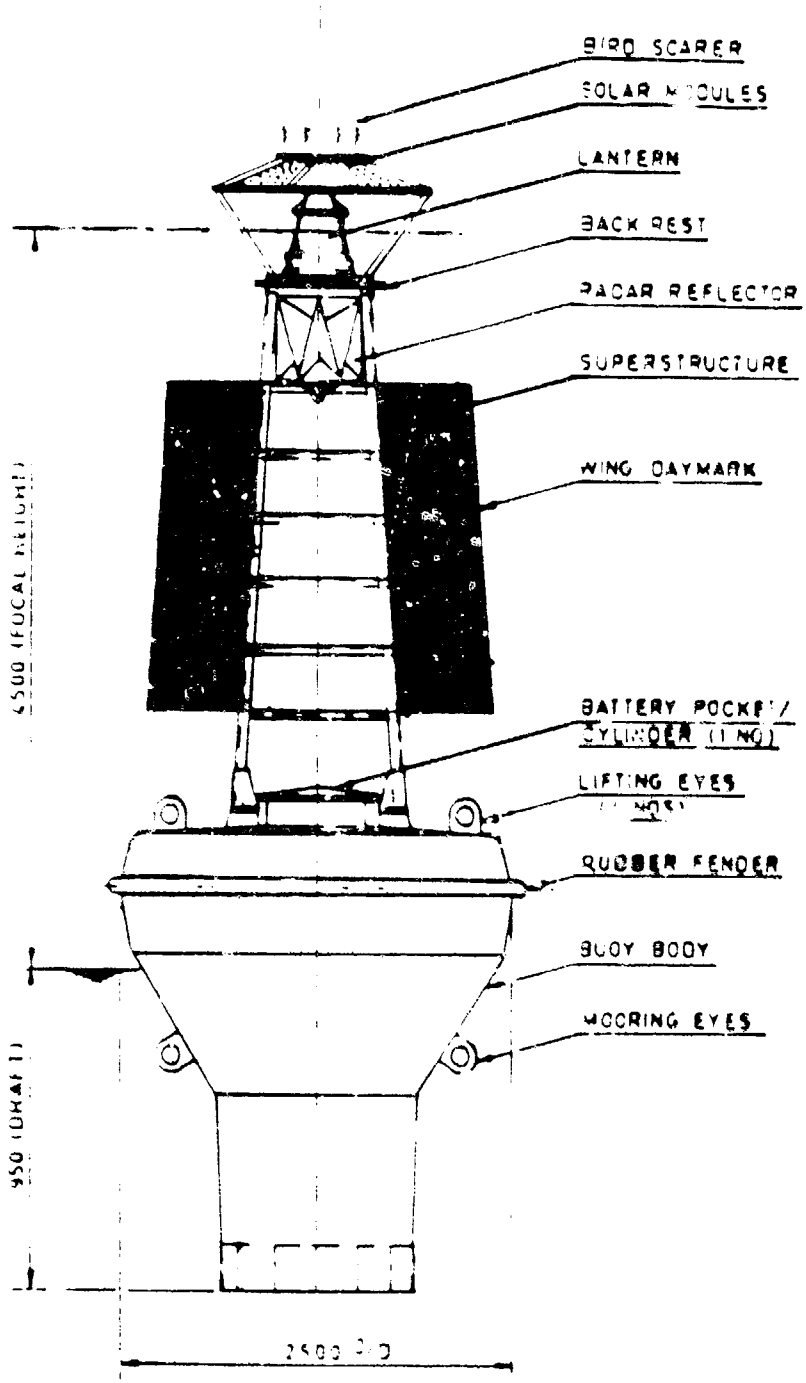
BIRD SCARER
SOLAR MODULES
LANTERN
BACK REST
RADAR REFLECTOR
SUPERSTRUCTURE
WING DAYMARK
BATTERY POCKET/
CYLINDER (1 NO)
LIFTING EYES
RUBBER FENDER
BUOY BODY
MOORING EYES

INDIA 1-2

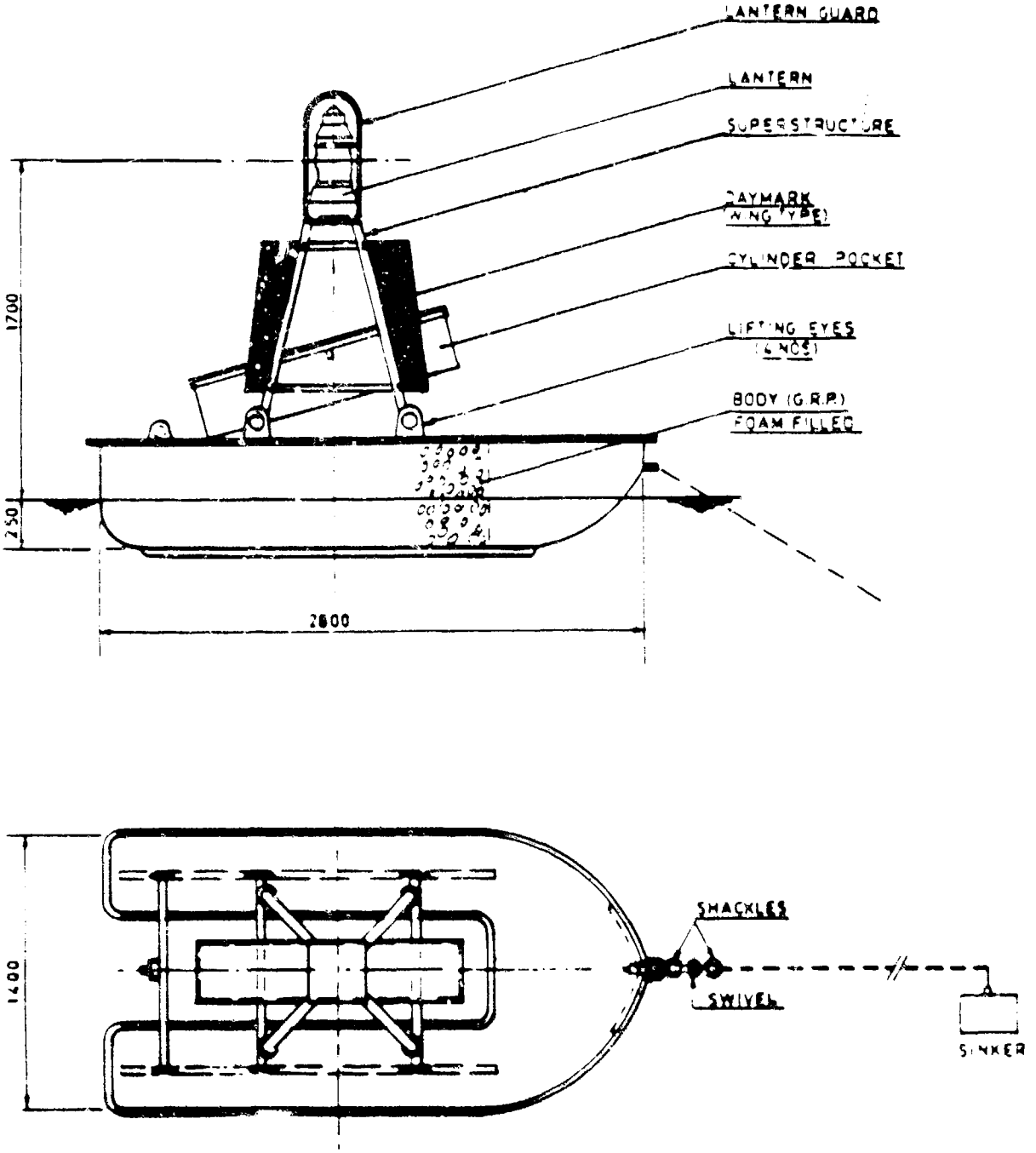
LANTERN GUARD
LANTERN
SUPERSTRUCTURE
DAYMARK
(WING TYPE)
CYLINDER POCKET
LIFTING EYES
(6 NOS)
BODY (G.R.P.)
FOAM FILLED
1700
250
2600
1400
SHACKLES
SWIVEL
SINKER

INDIA MFG 1-3

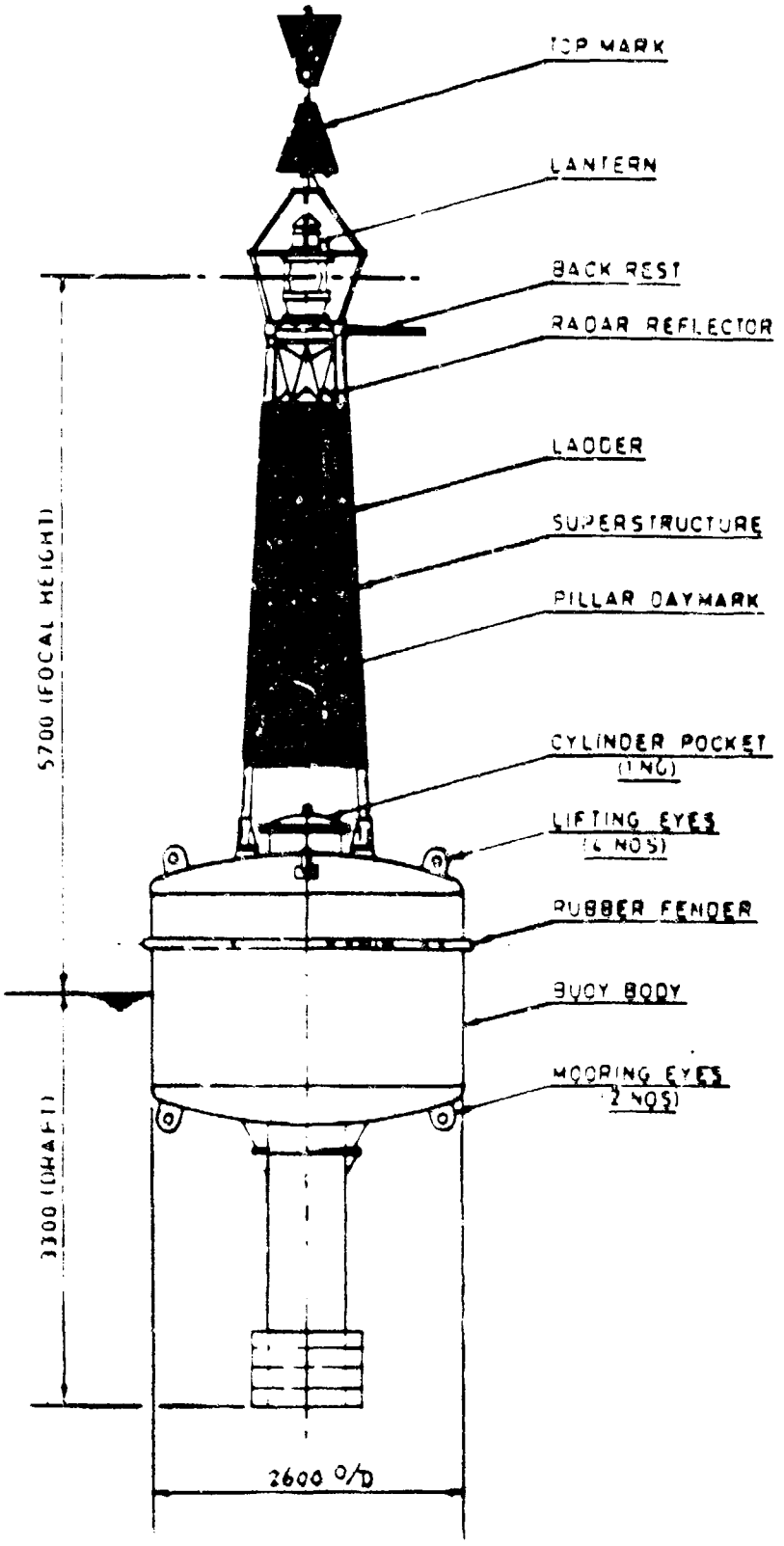
TOP MARK
LANTERN
BACK REST
RADAR REFLECTOR
LADDER
SUPERSTRUCTURE
PILLAR DAYMARK
CYLINDER POCKET
(1 NO)
LIFTING EYES
(6 NOS)
RUBBER FENDER
BUOY BODY
MOORING EYES
(2 NOS)
5700 (FOCAL HEIGHT)
3300 (DRAFT)
2600 O/D

INDIA MFG 1-4

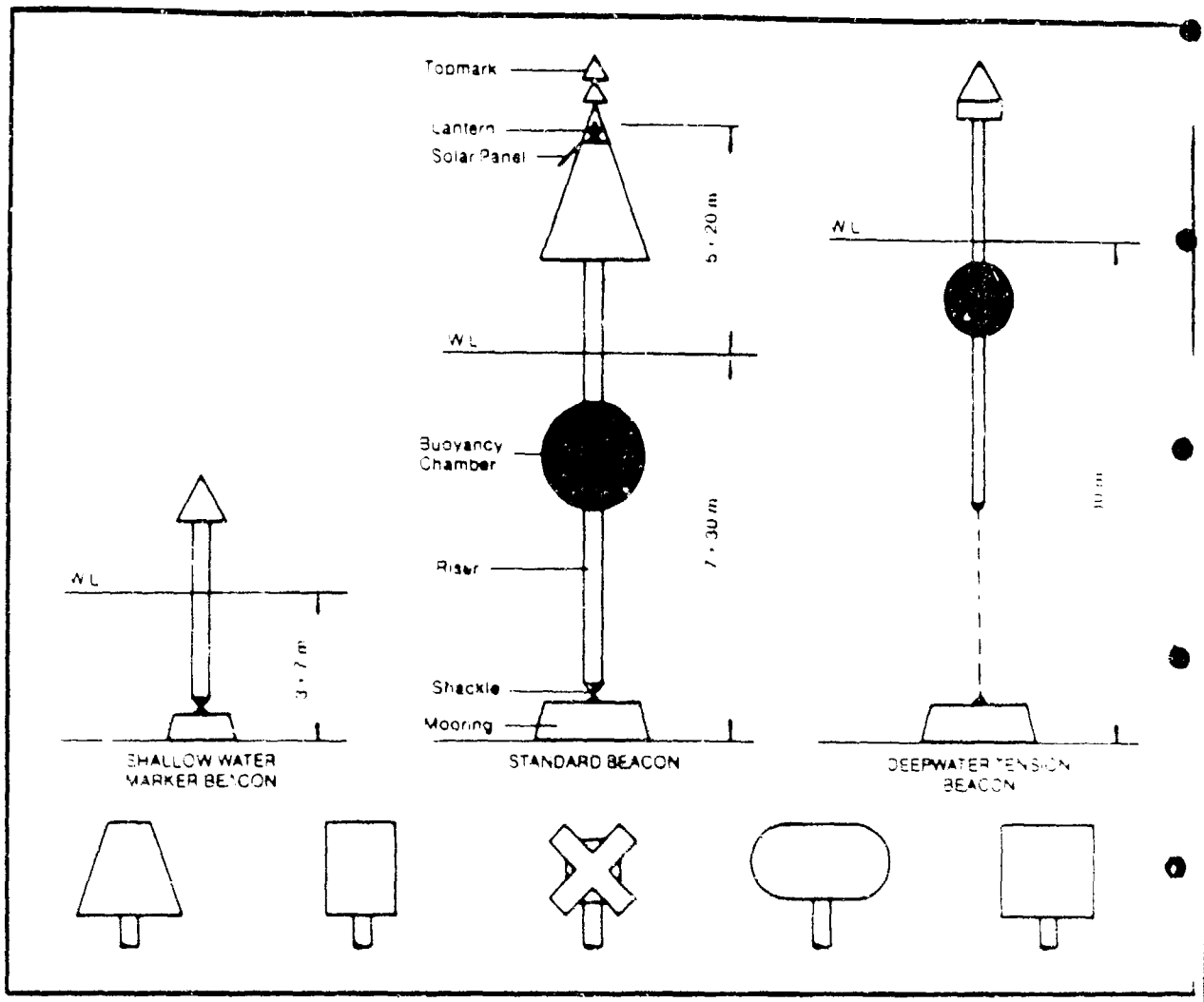
Topmark
Lantern
Solar Panel
5 · 20 m
W L
Buoyancy Chamber
7 · 30 m
Riser
Shackle
Mooring
STANDARD BEACON
W L
3 · 7 m
SHALLOW WATER MARKER BEACON
W L
DEEPWATER TENSION BEACON

THIS PAGE INTENTIONALLY LEFT BLANK

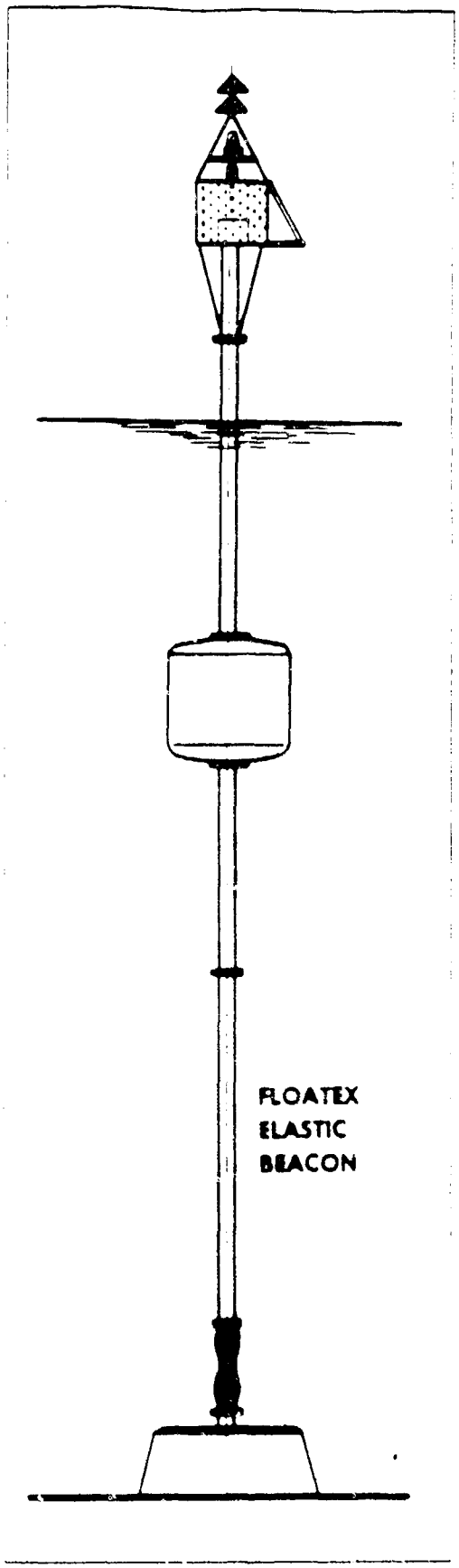
FLOATEX
ELASTIC
BEACON

THIS PAGE INTENTIONALLY LEFT BLANK

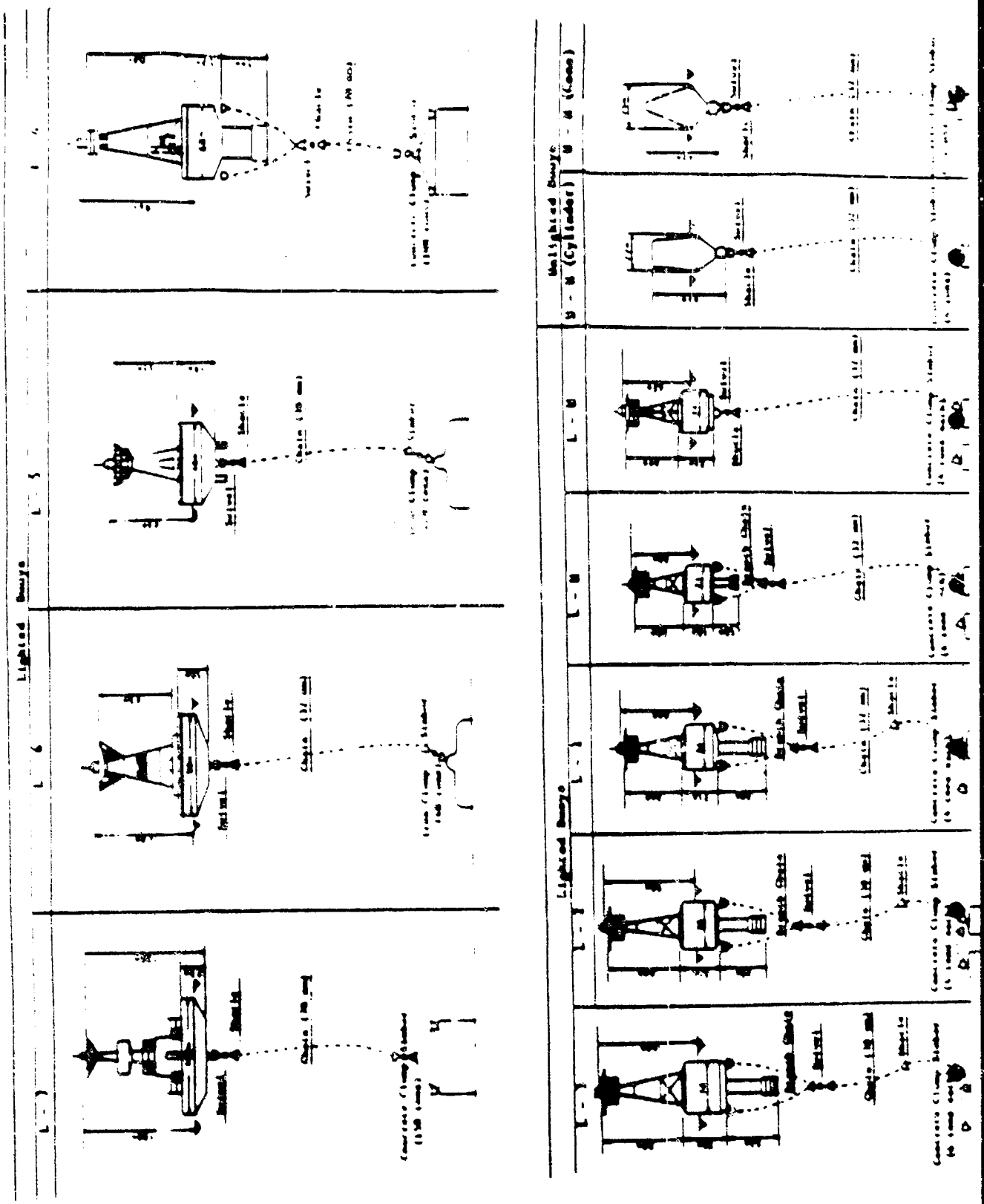

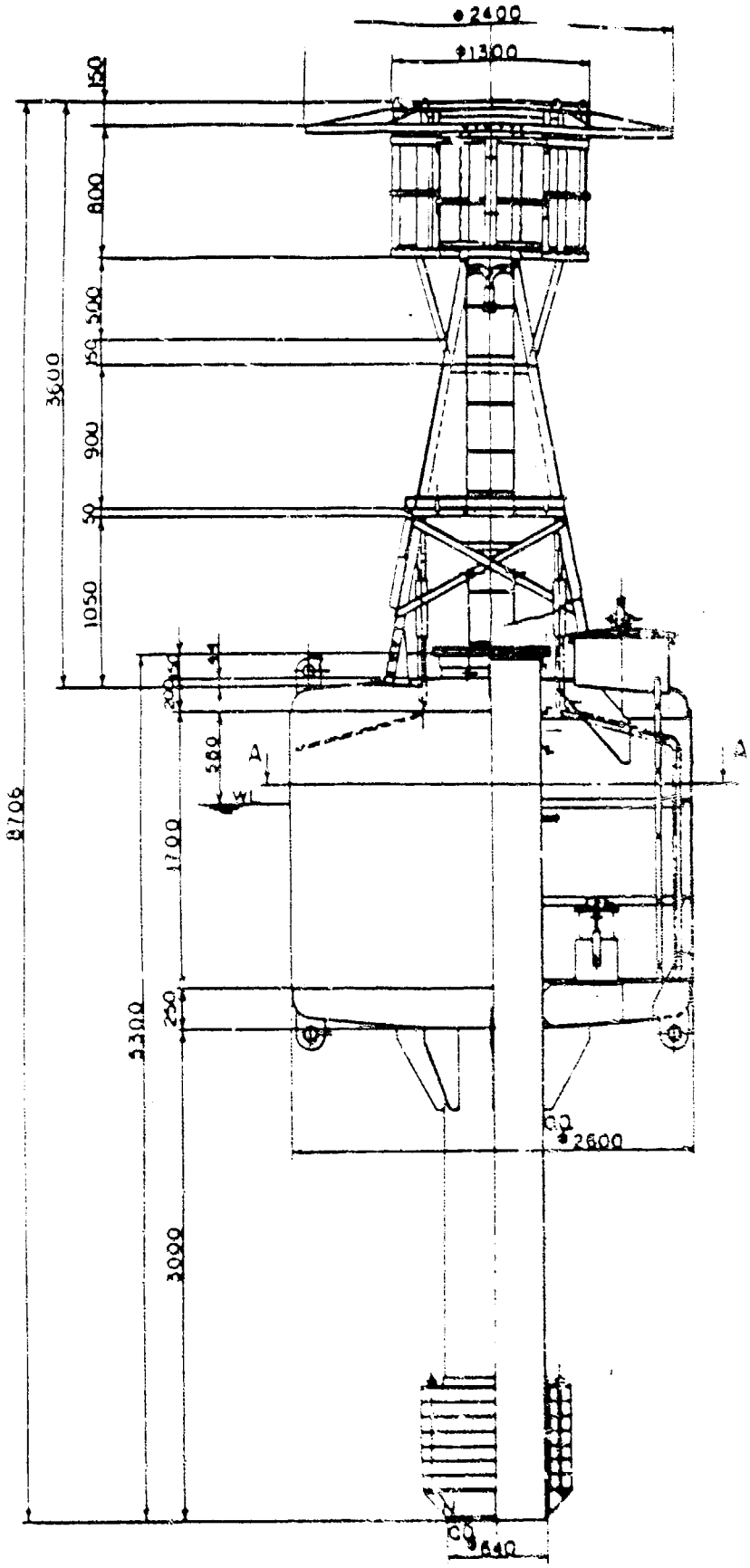
150
800
500
150
900
50
1050
3600
8706
200
50
580
A
A
1700
250
3300
3000
CG
2600
CG
640
φ2400
φ1300

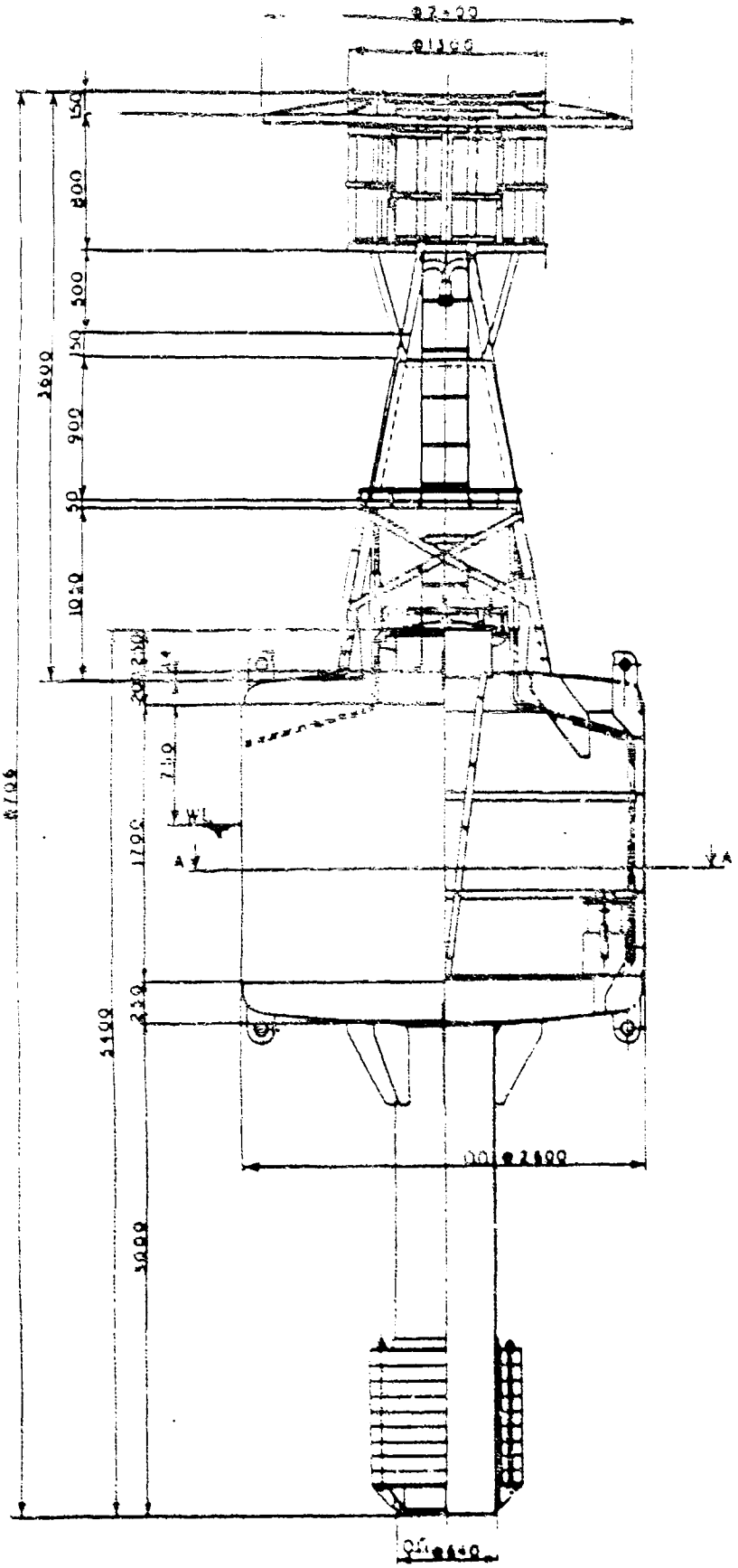
150
800
500
150
900
50
1050
2600
2140
710
1790
330
2100
3000
6700
A
A
φ2800
φ1300
φ2400
φ640

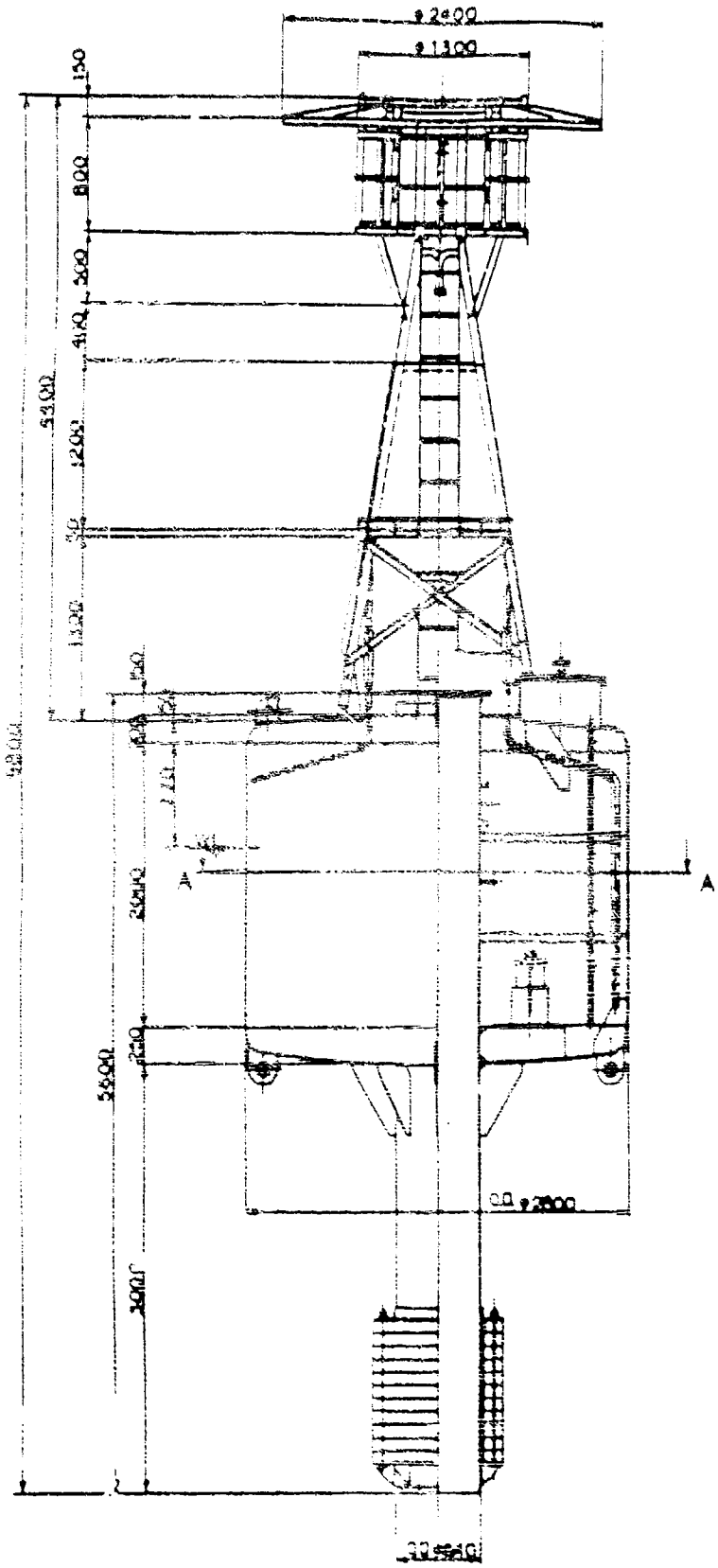
φ2400
φ1300
150
800
260
410
1200
300
1320
150
A
A
250
φ2800
300

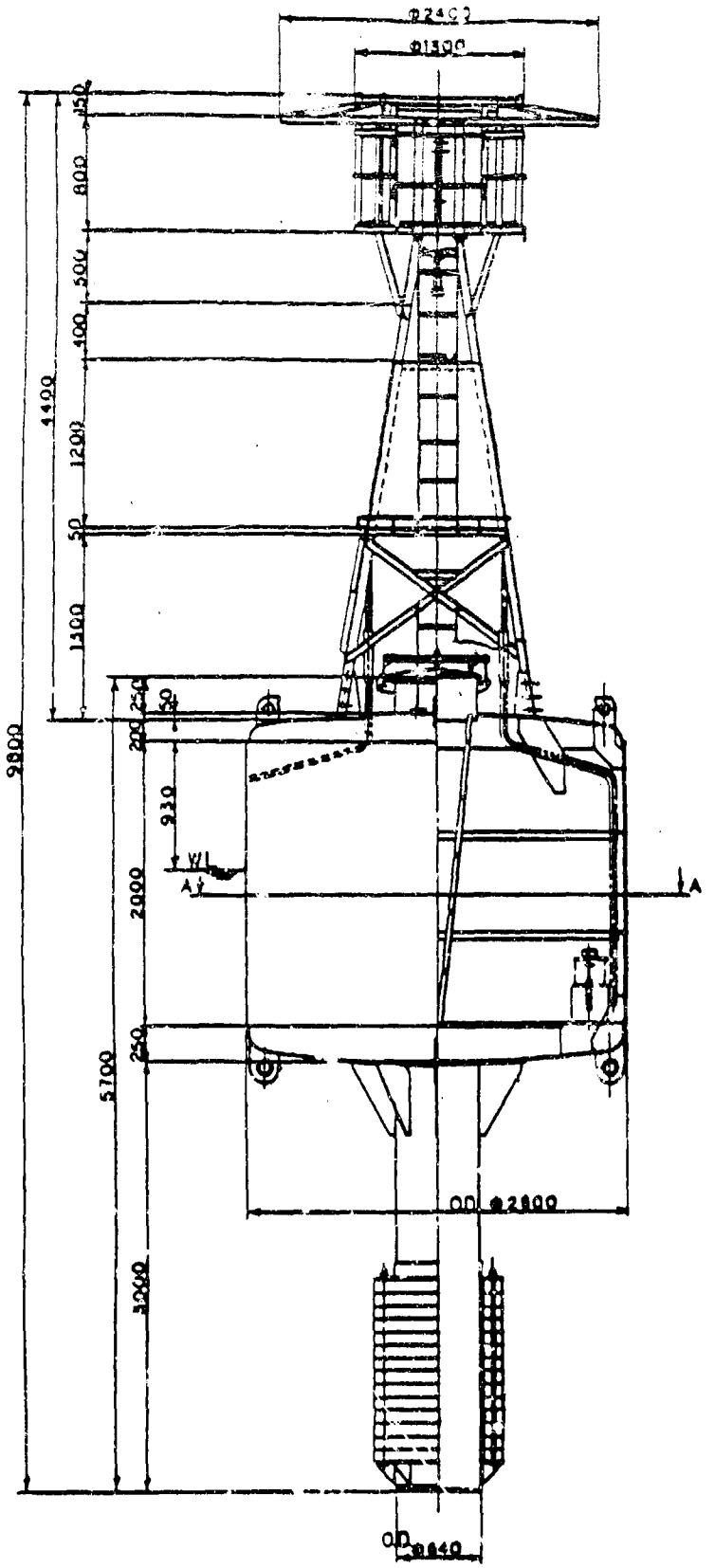
Φ2400
Φ1300
150
800
500
400
1200
50
1100
4400
9800
250
50
200
930
WL
A
A
2000
250
5700
3200
OD Φ2800
OD Φ640

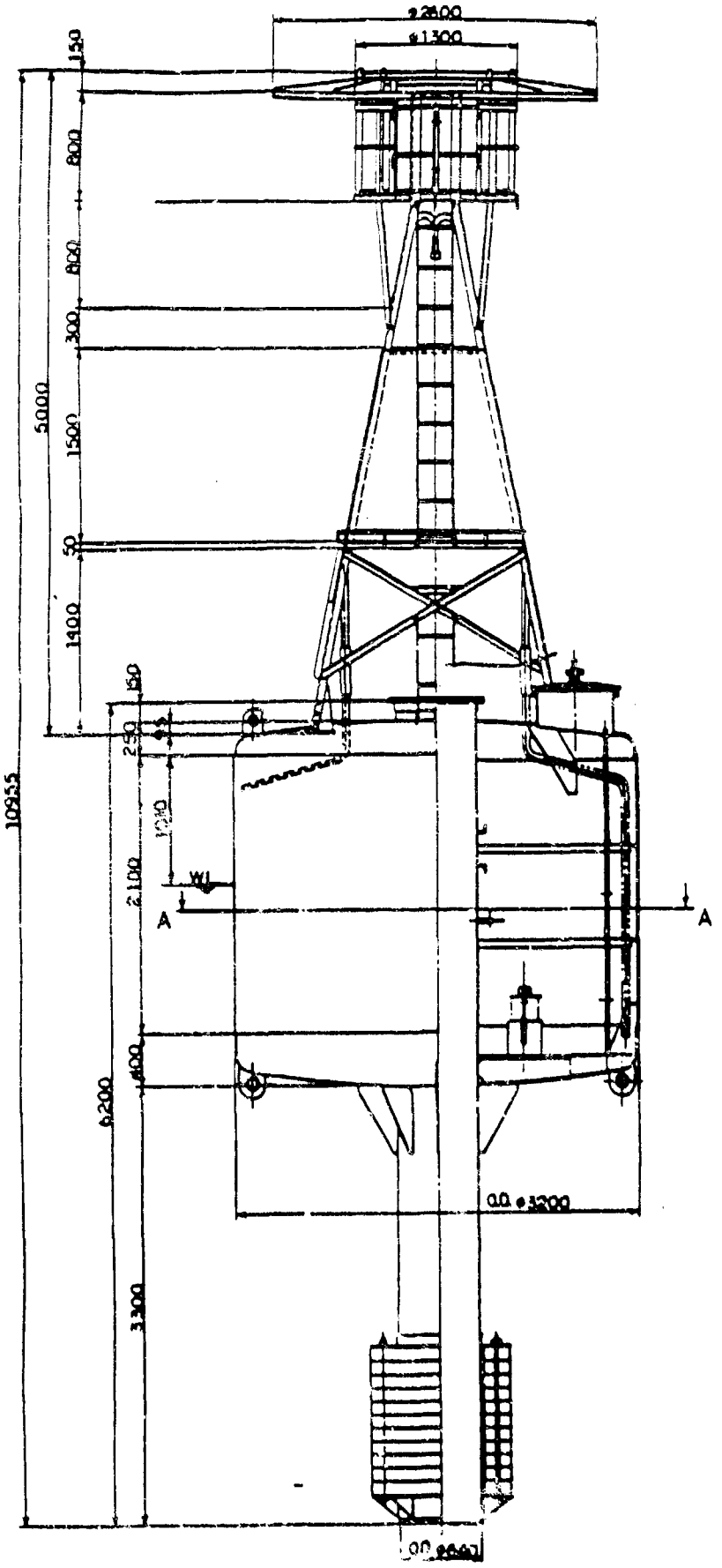
φ2600
φ1300
150
800
800
300
1500
50
1400
5000
10955
150
250
93
1080
2100
WL
A
A
400
6200
3300
O.D. φ3200
O.D. φ660

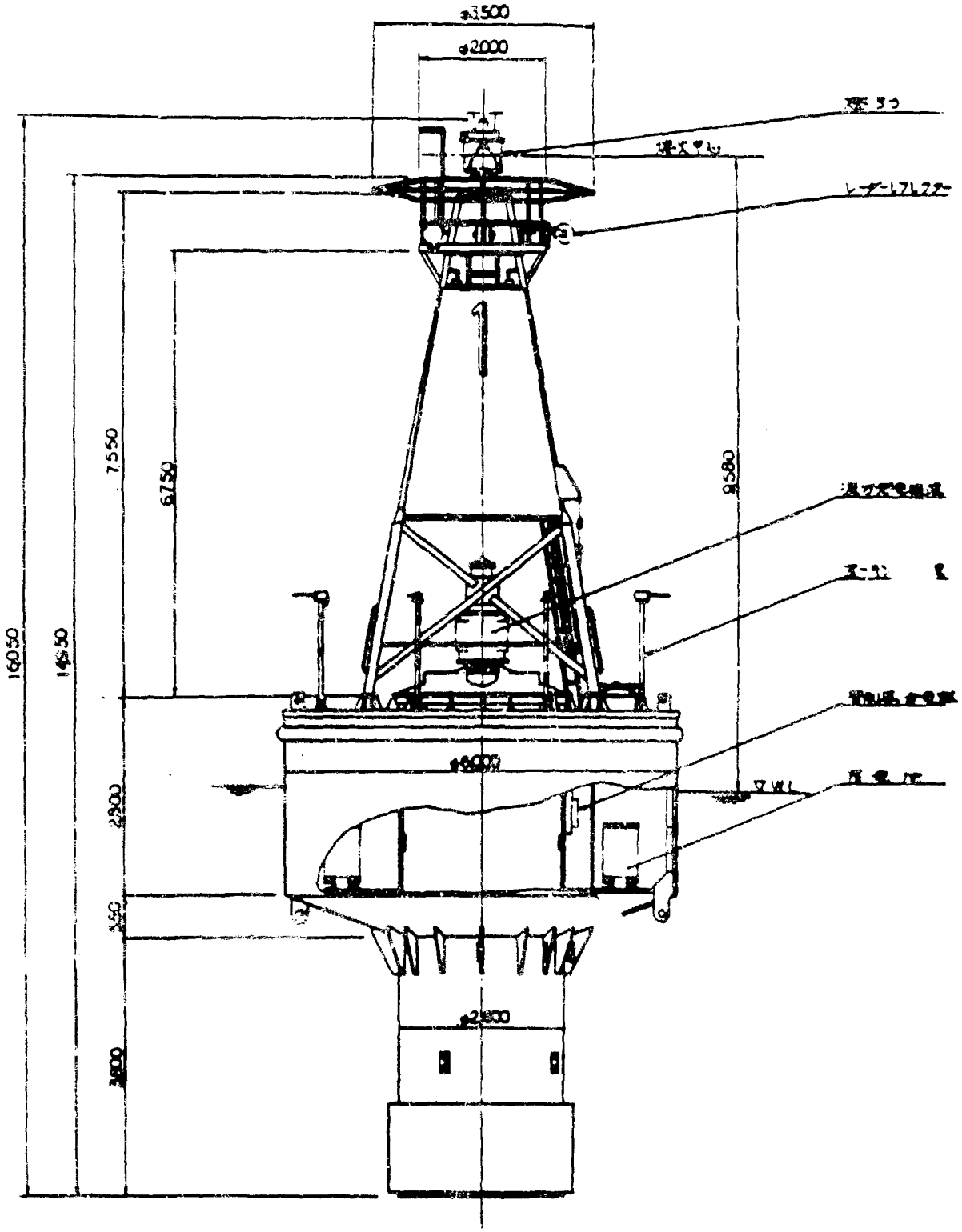
φ3500
φ2000
7550
6750
9580
16050
14650
φ6000
2300
350
φ2800
3600

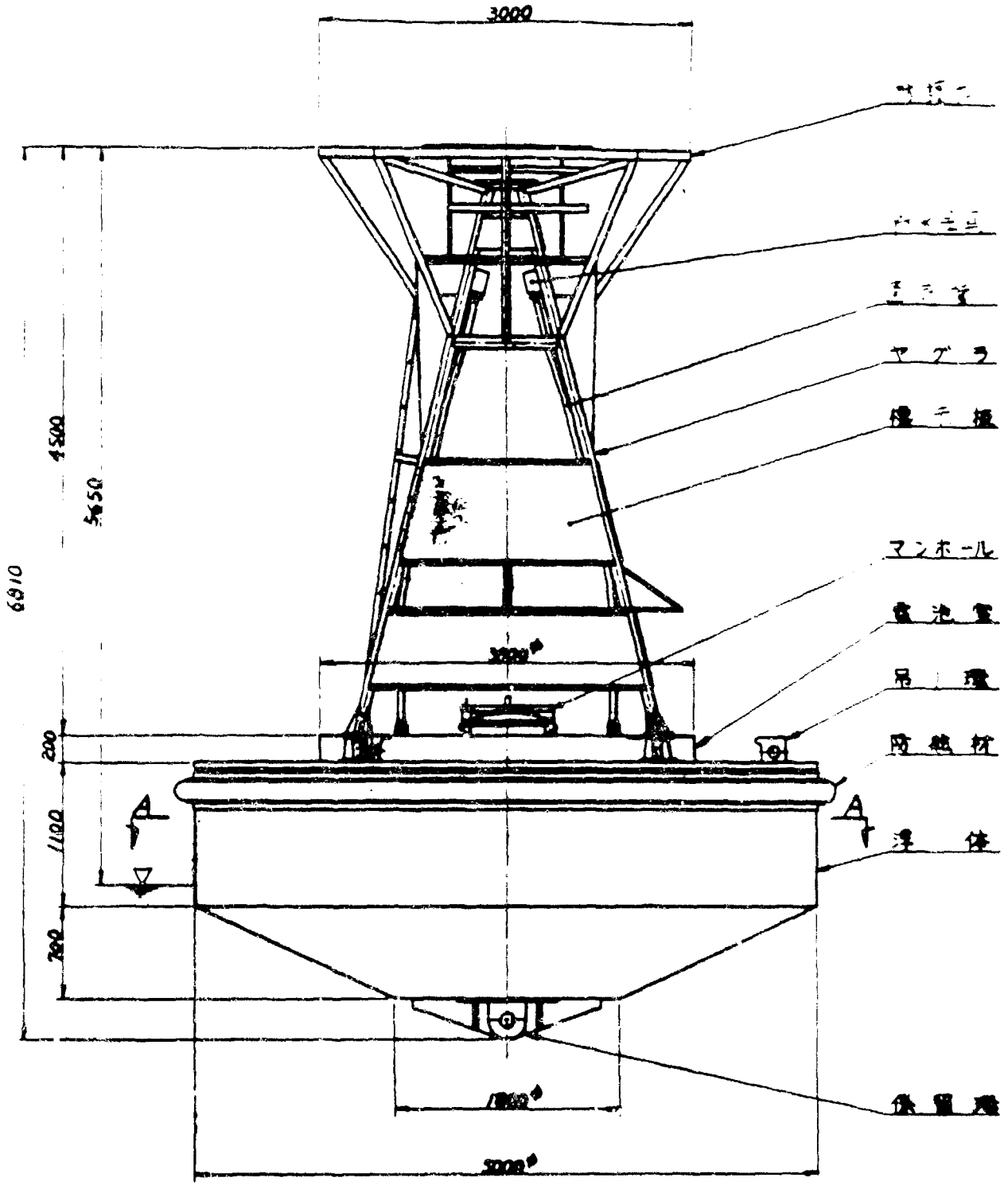
3000
4500
5650
6910
3000φ
200
1100
700
A
A
1800φ
3000φ
ヤグラ
マンホール
吊環
防舷材
浮体

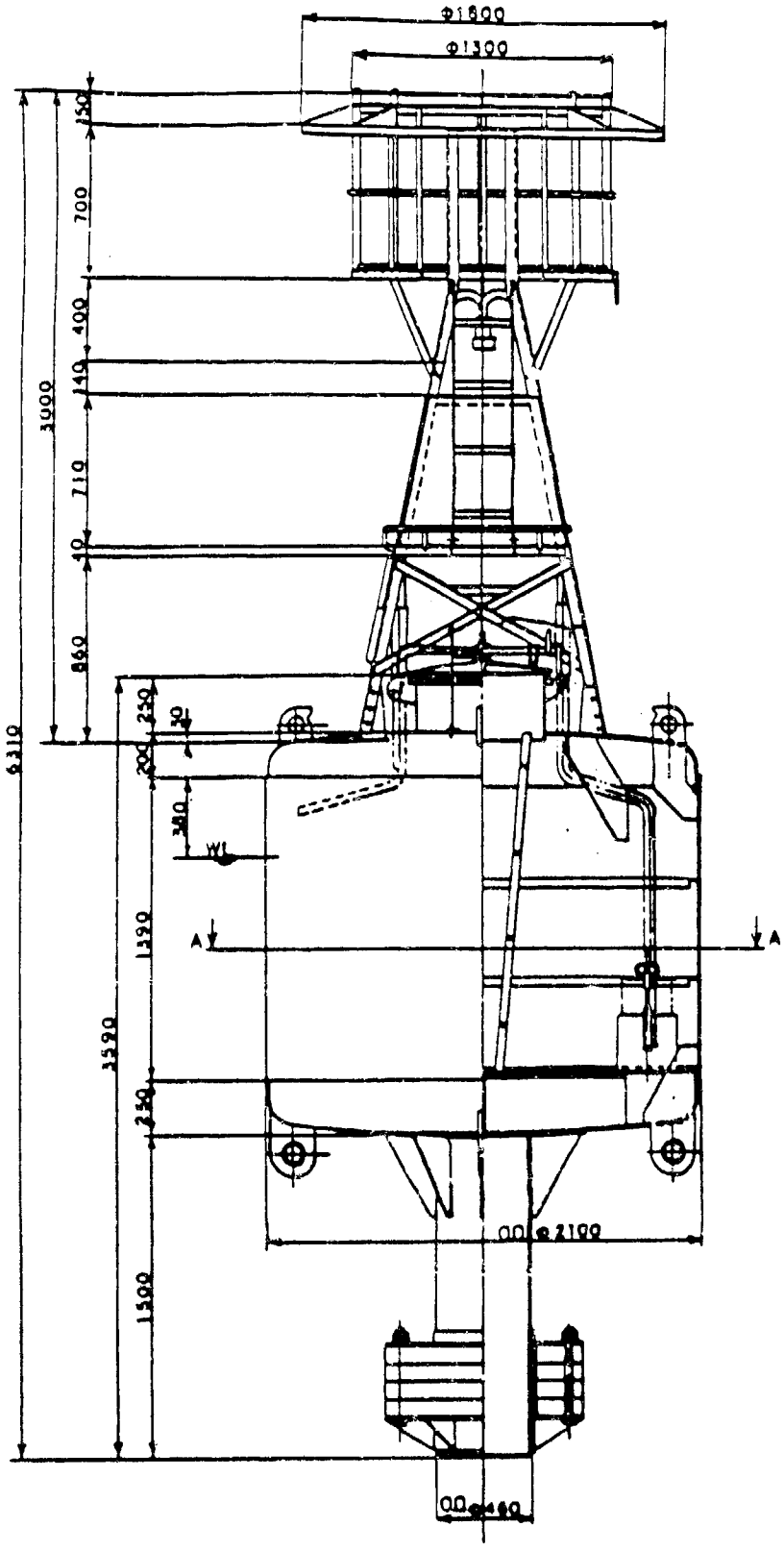
Φ1800
Φ1300
150
700
400
140
3000
710
10
860
6310
230
30
200
380
WL
1390
A
A
3590
250
1500
Φ2100
Φ460

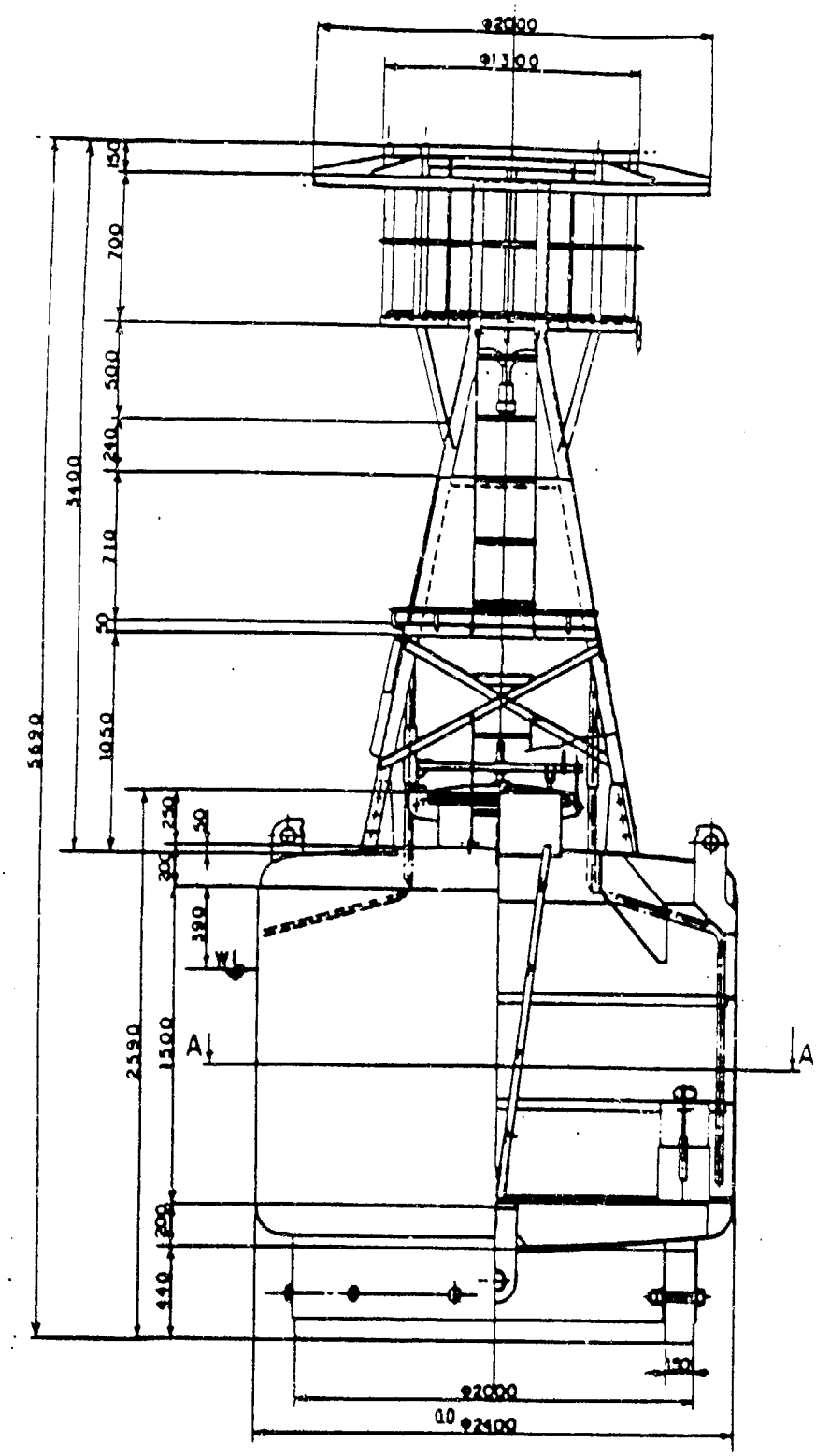
φ20000
φ13000
150
700
500
240
3400
710
20
1050
5620
250
50
300
320
WL
2590
1500
A
A
200
440
150
φ20000
φ24000

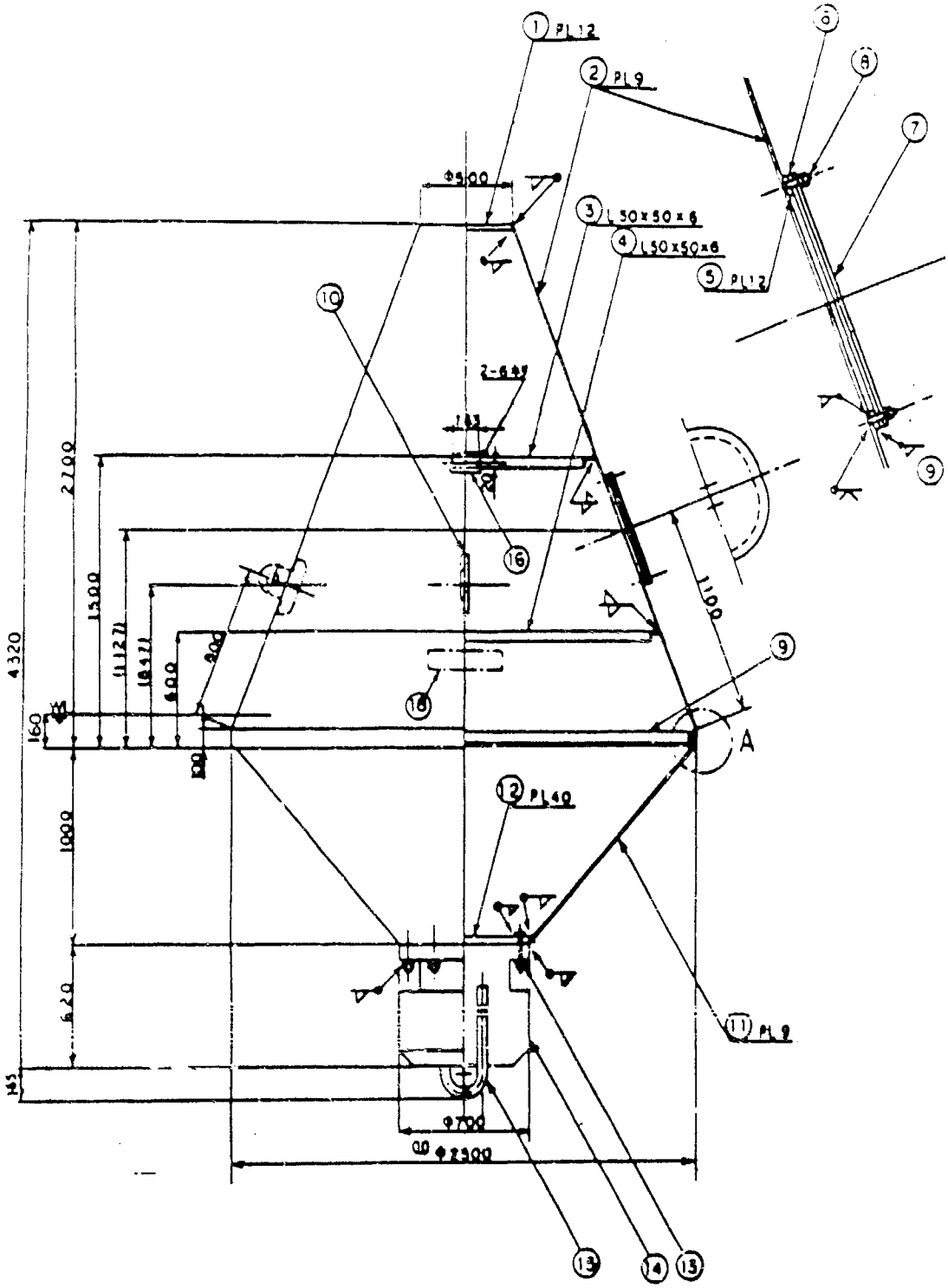
1 PL12
2 PL9
3 L50x50x6
4 L50x50x6
5 PL12
6
7
8
9
10
11 PL9
12 PL40
13
14
13
16
18
A
φ500
2-φ45
183
2700
1500
(1127)
(1017)
800
400
4320
160
100
1000
620
145
1100
φ700
φ2900

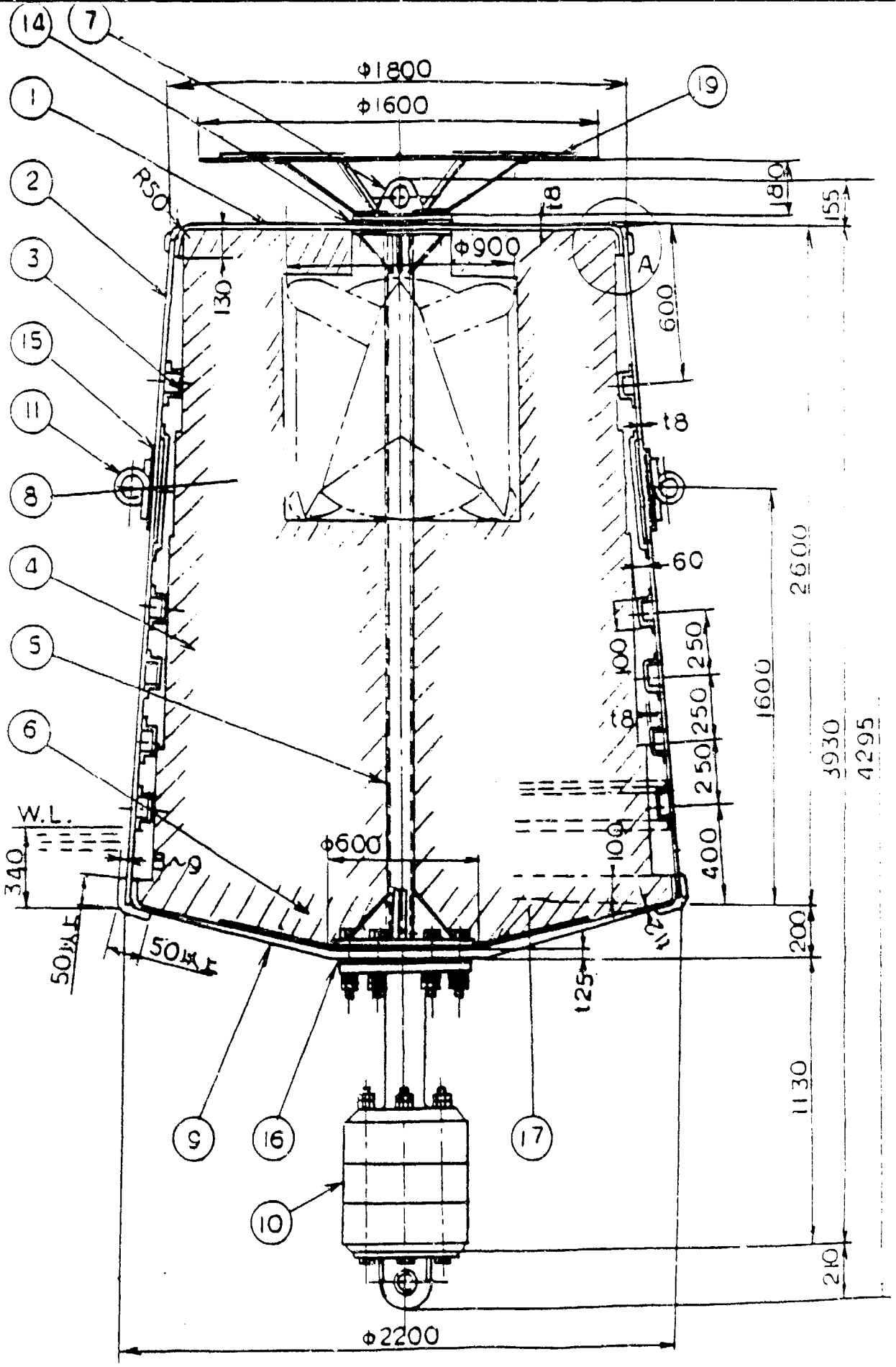
14
7
1
2
3
15
11
8
4
5
6
W.L.
340
50以上
50以上
9
16
10
17
19
φ1800
φ1600
R50
t8
80
155
φ900
A
130
600
t8
60
2600
250
250
250
250
100
t8
1600
3930
4295
φ600
100
400
200
125
1130
210
φ2200

SEGIYOSETOHO
RESILIENT LIGHT BECON

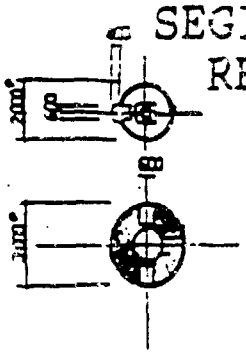

PLAN:PLATFORM

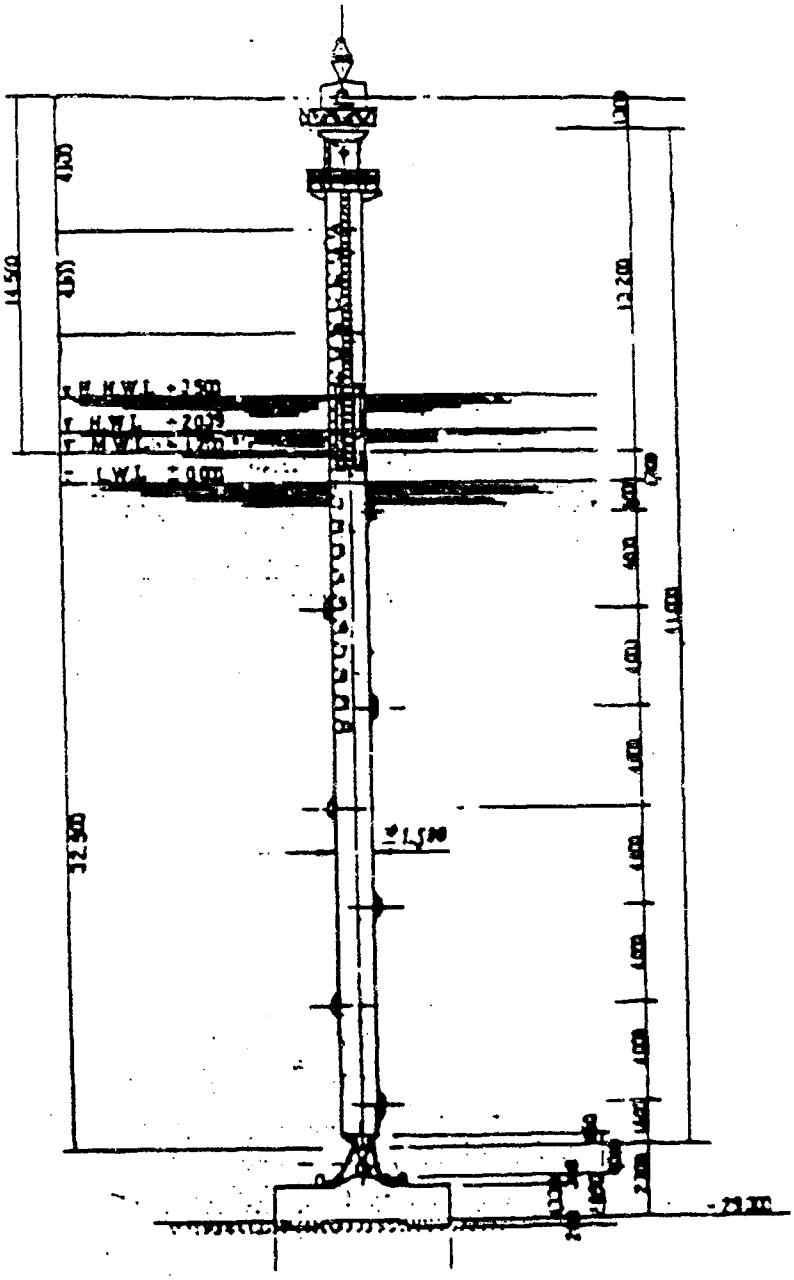

ELEVATION

THIS PAGE INTENTIONALLY LEFT BLANK

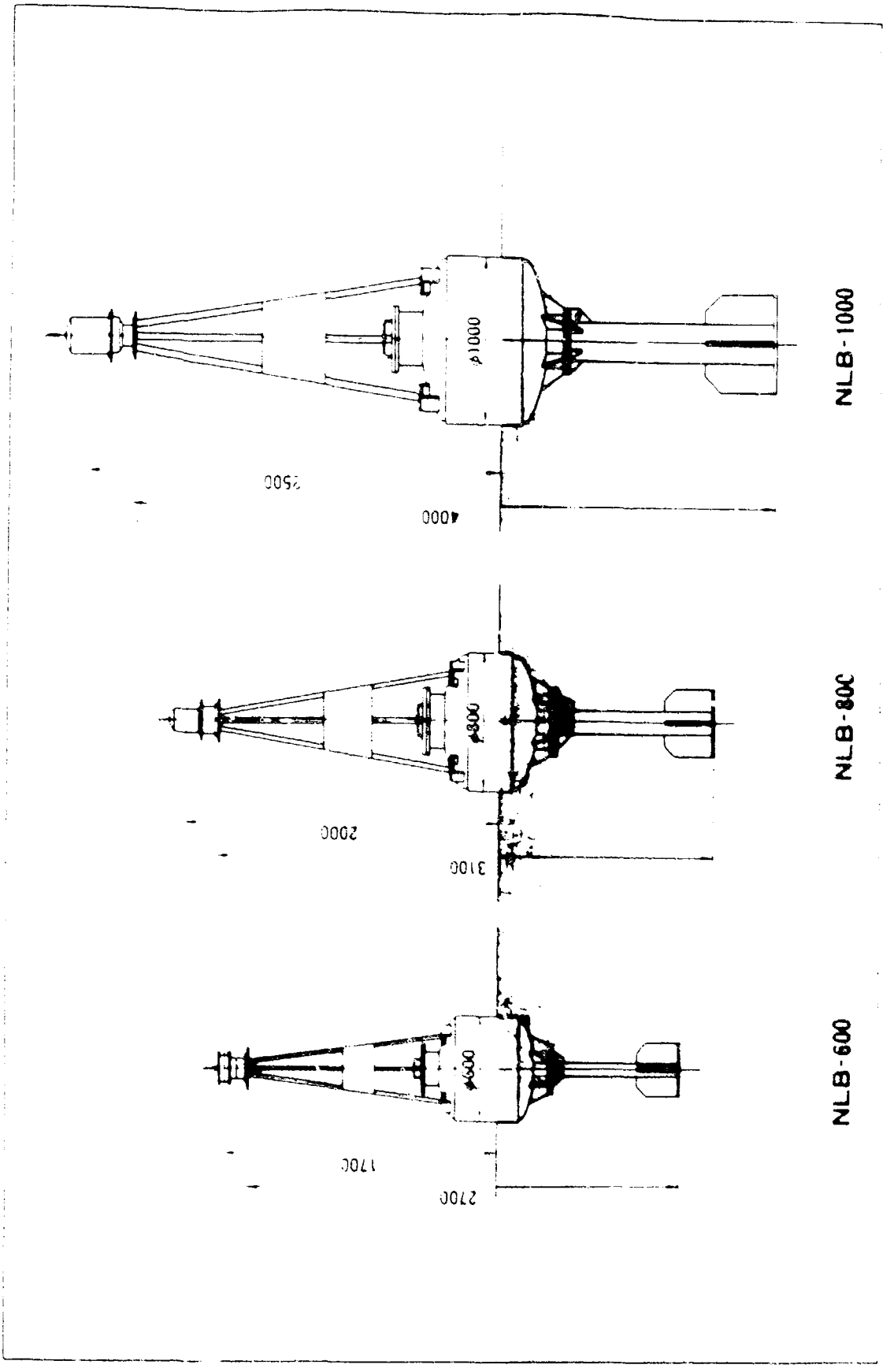
NLB-1000
φ1000
4000
2500
NLB-800
φ800
3100
2000
NLB-600
φ600
2700
1700

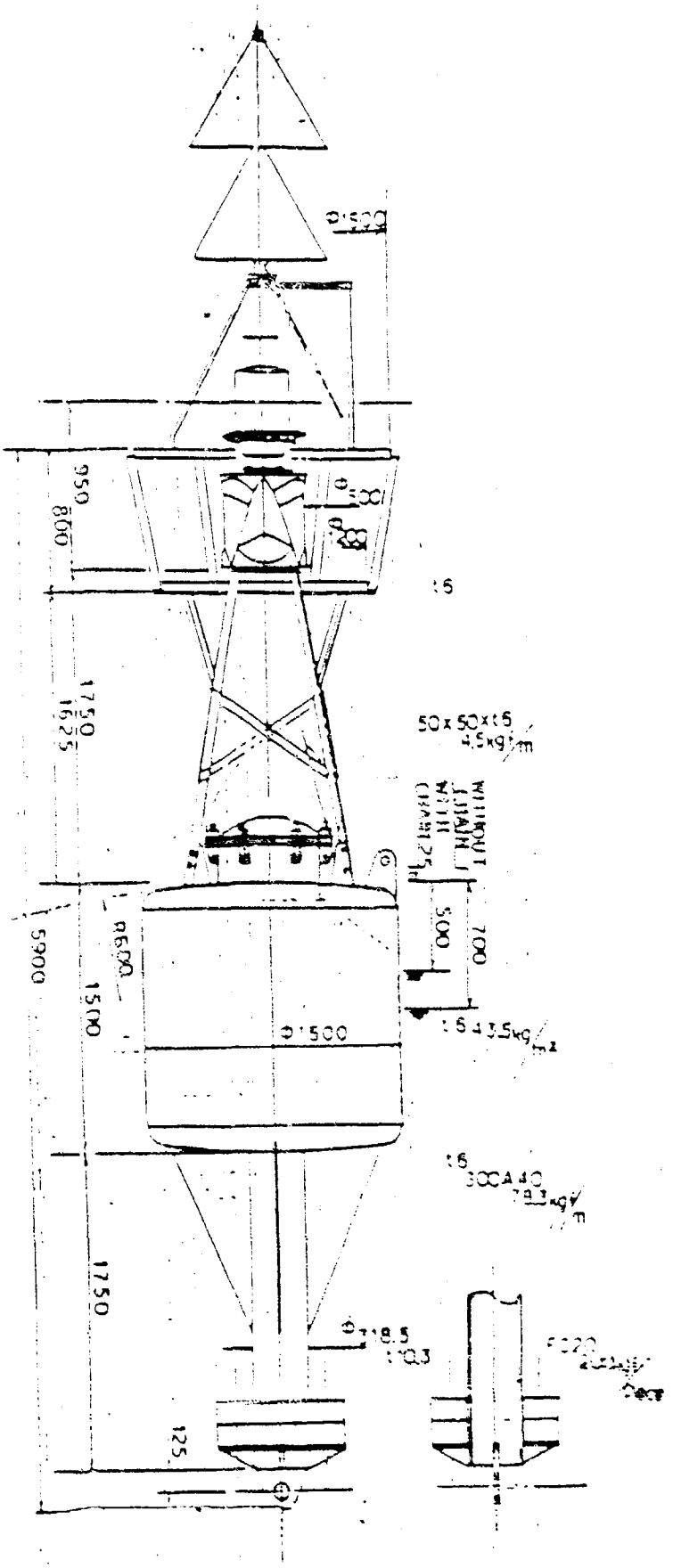
950
800
1750
1625
5900
1500
125
1750
50x50x6
4.5kg/m
WITHOUT
JAPAN
MARK
CHAIN
500
700
1500
6300A40

BUOY (φ15in)

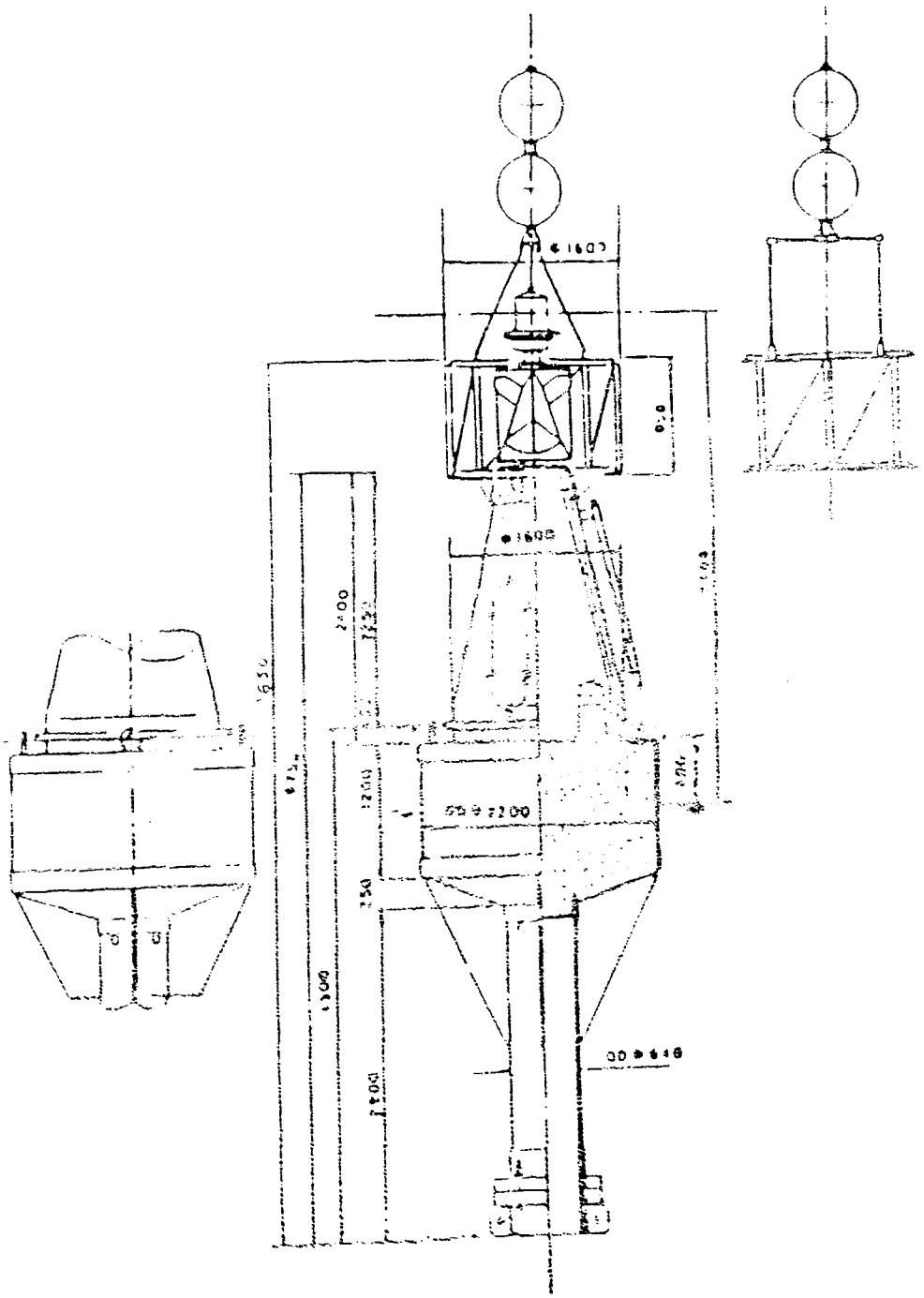

THIS PAGE INTENTIONALLY LEFT BLANK

Type I-1

Dimensions (m)

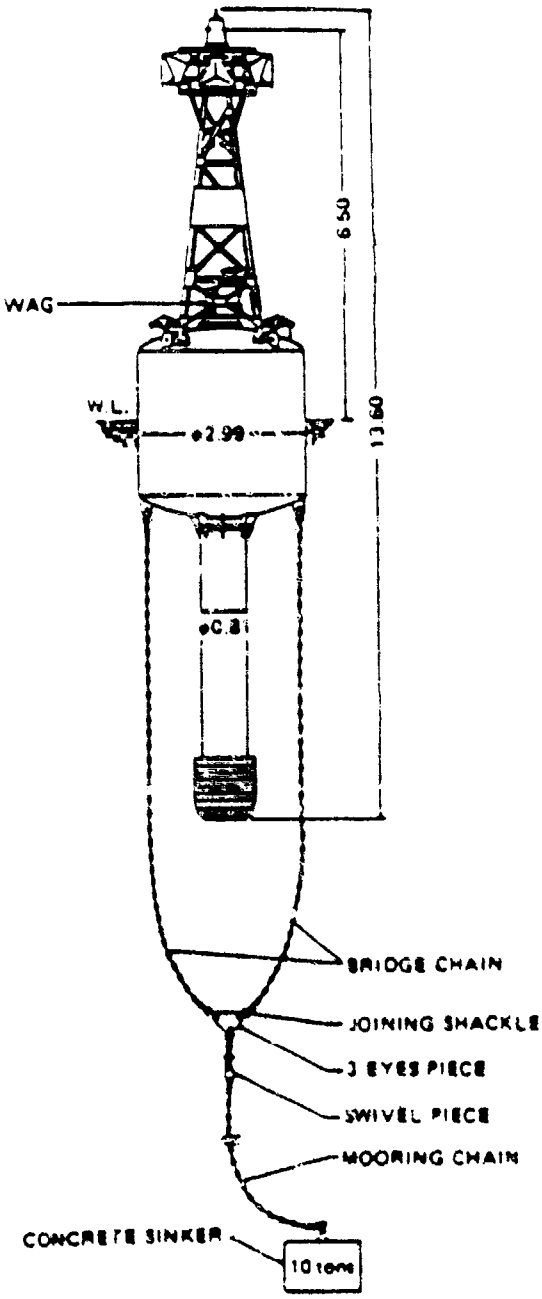

TYPE I 3600S

Dimensions (m)

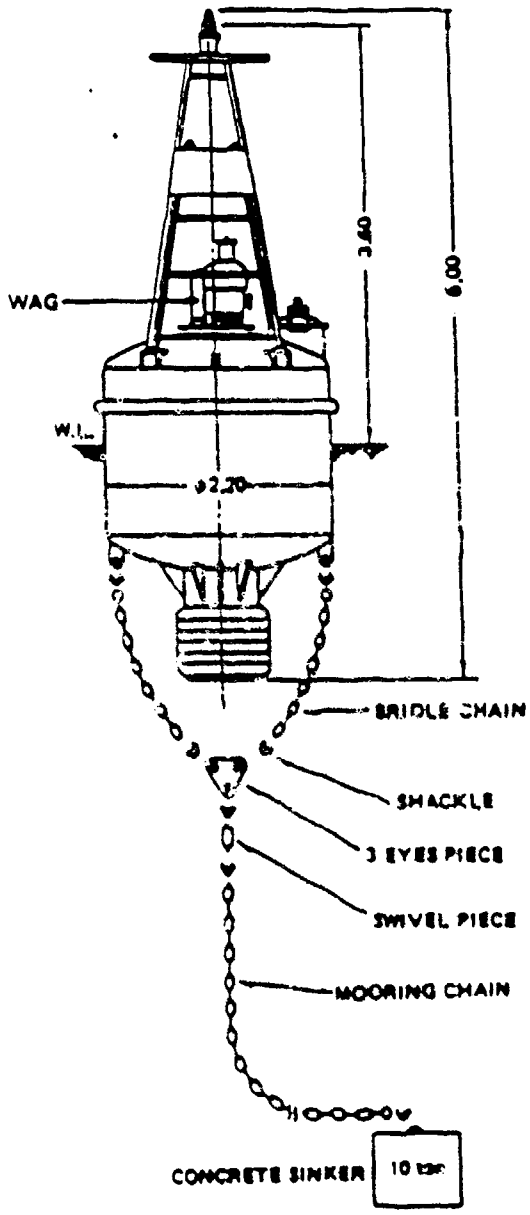

TYPE "S-2"

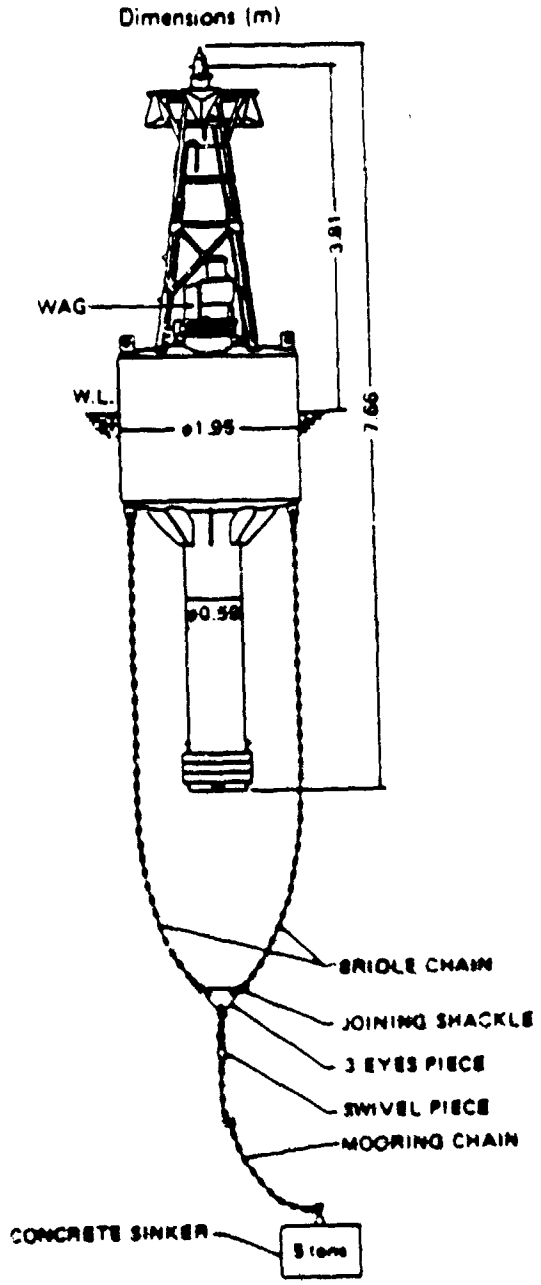

JAPAN MFG. 2-3

Type S-3[illegible]

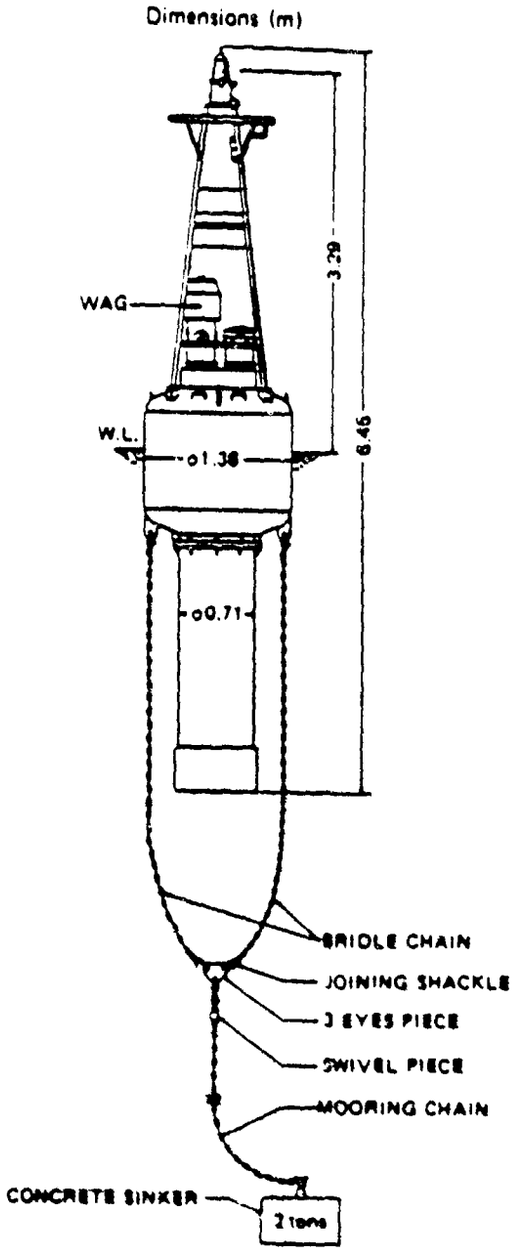
Dimensions (m)
WAG
W.L.
o1.38
3.29
6.46
o0.71
BRIDLE CHAIN
JOINING SHACKLE
3 EYES PIECE
SWIVEL PIECE
MOORING CHAIN
CONCRETE SINKER
2 tons

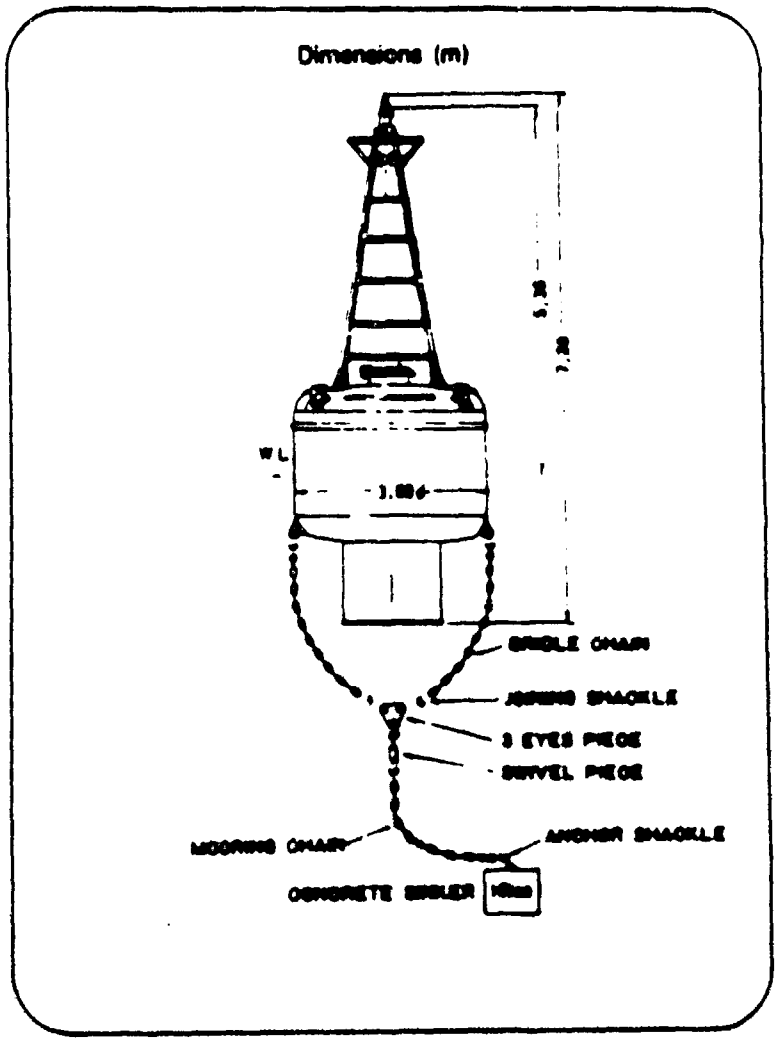
Dimensions (m)
W.L.
BRIDLE CHAIN
JOINING SHACKLE
3 EYES PIECE
SWIVEL PIECE
MOORING CHAIN
ANCHOR SHACKLE
CONCRETE SINKER

Type MS-500

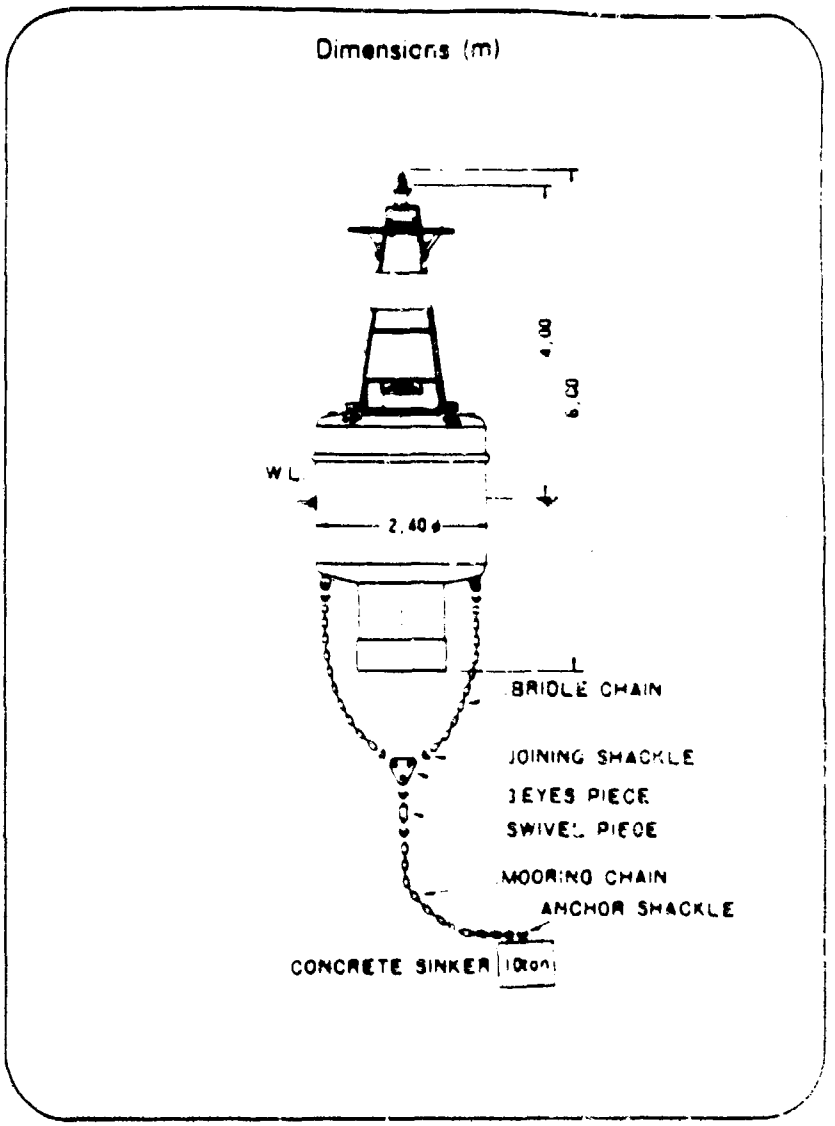
Dimensions (m)
4.80
6.80
W.L.
2.40φ
BRIDLE CHAIN
JOINING SHACKLE
EYES PIECE
SWIVEL PIECE
MOORING CHAIN
ANCHOR SHACKLE
CONCRETE SINKER

Type MS-400

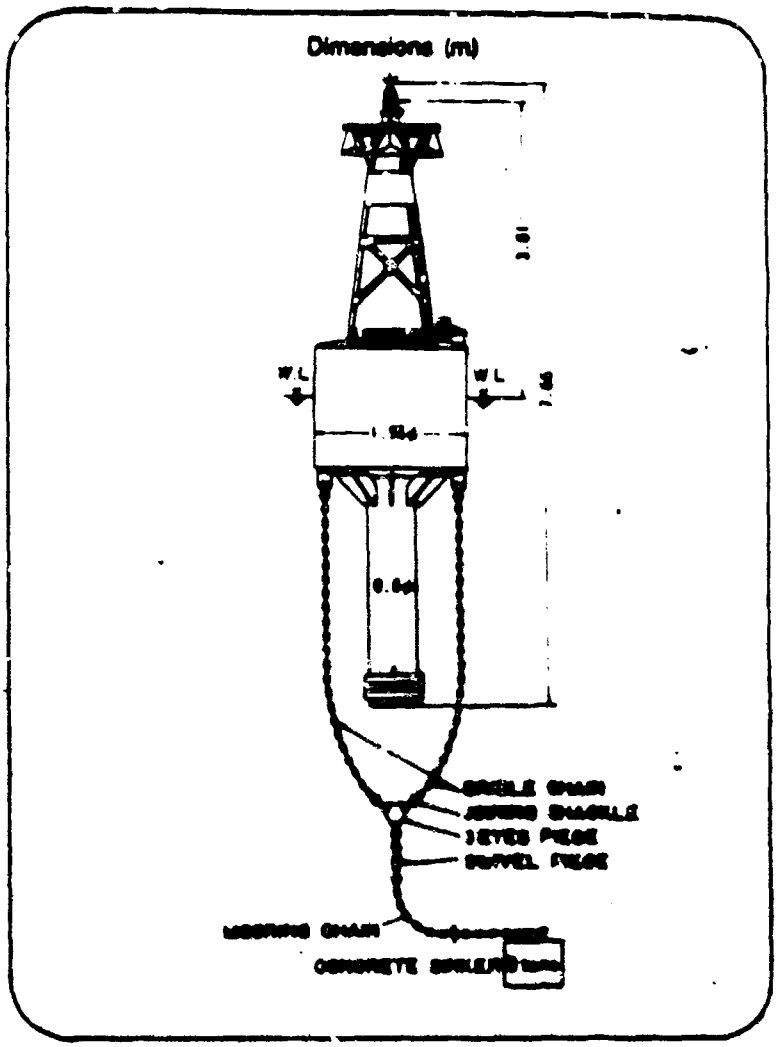
Dimensions (m)
W.L
W.L
3 EYES PIECE
SWIVEL PIECE
MOORING CHAIN
CONCRETE SINKER

Type M-350T

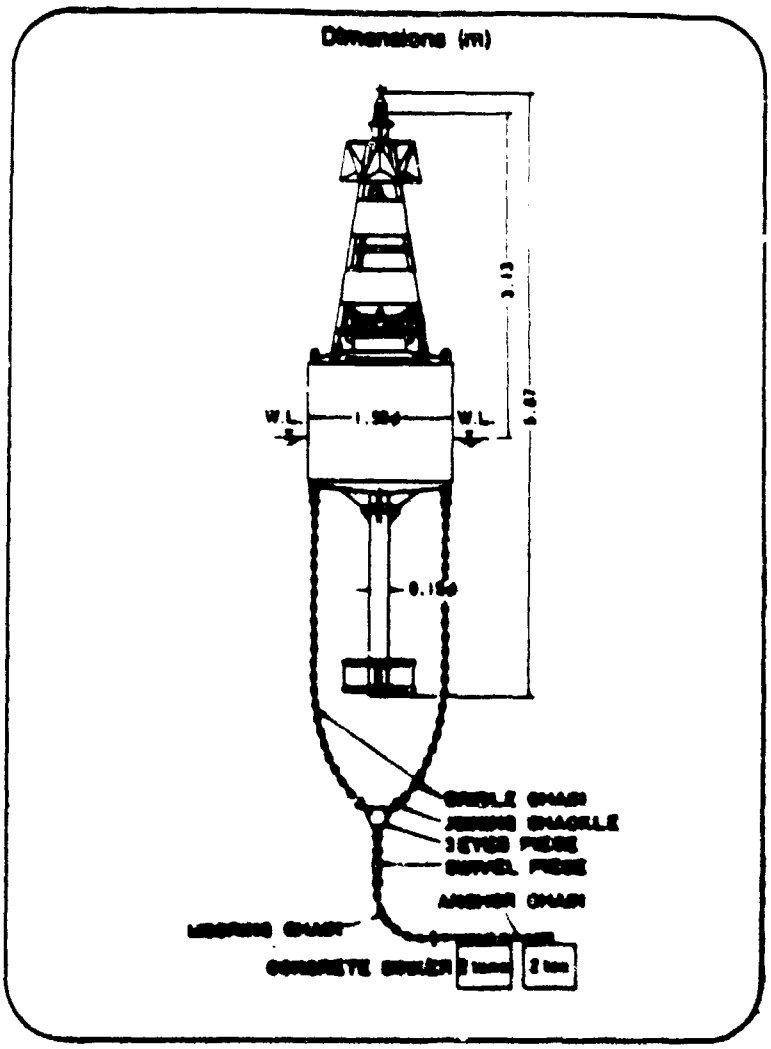
Dimensions (m)
W.L.
W.L.
SHACKLE CHAIN
SWIVEL PIECE
ANCHOR CHAIN
CONCRETE SINKER

Type H-290

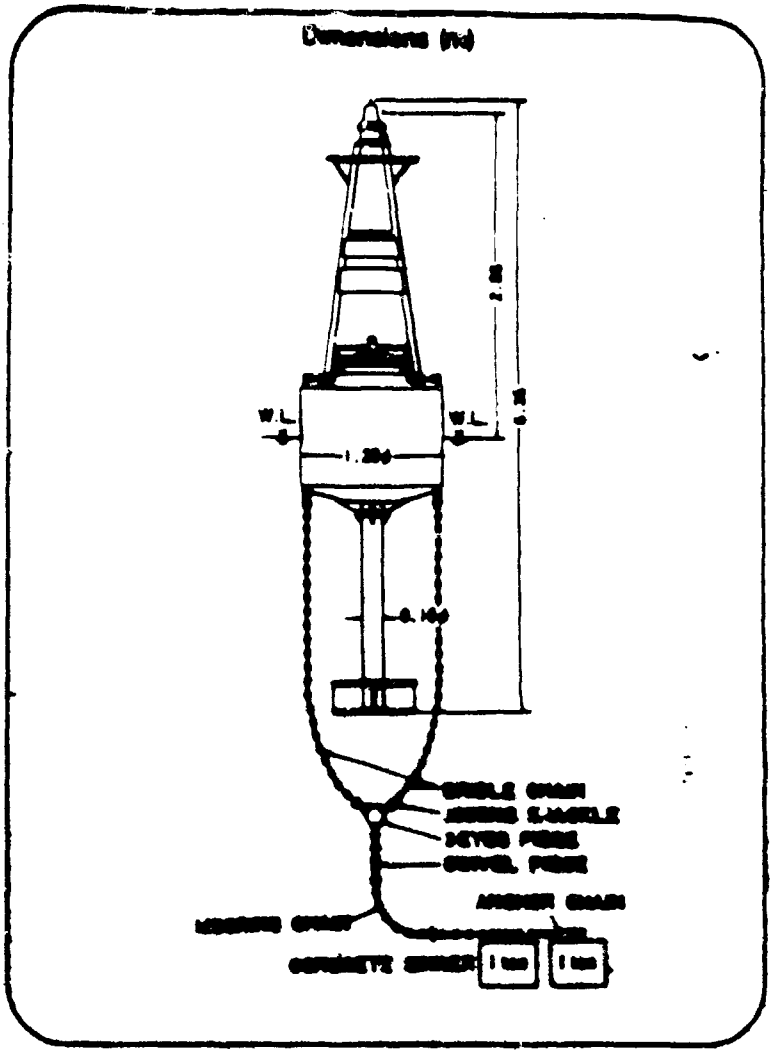

Type M-250C

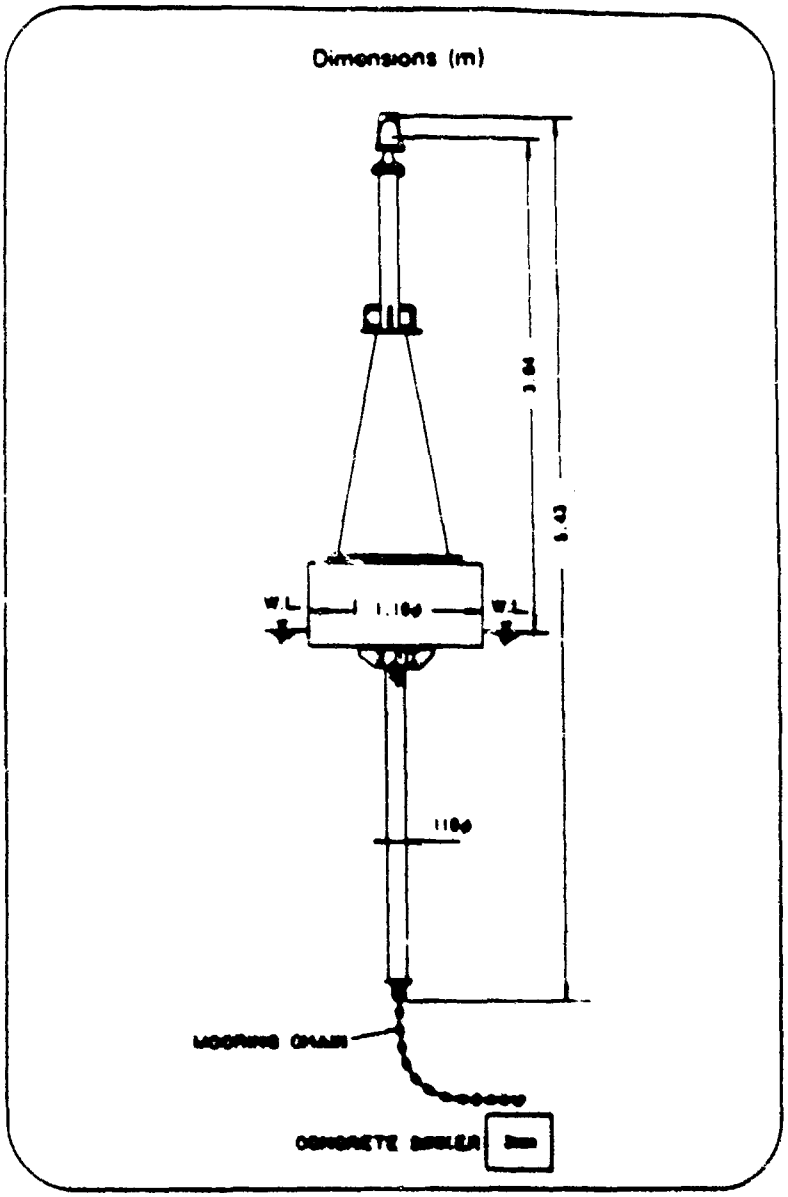

Type SAB-300

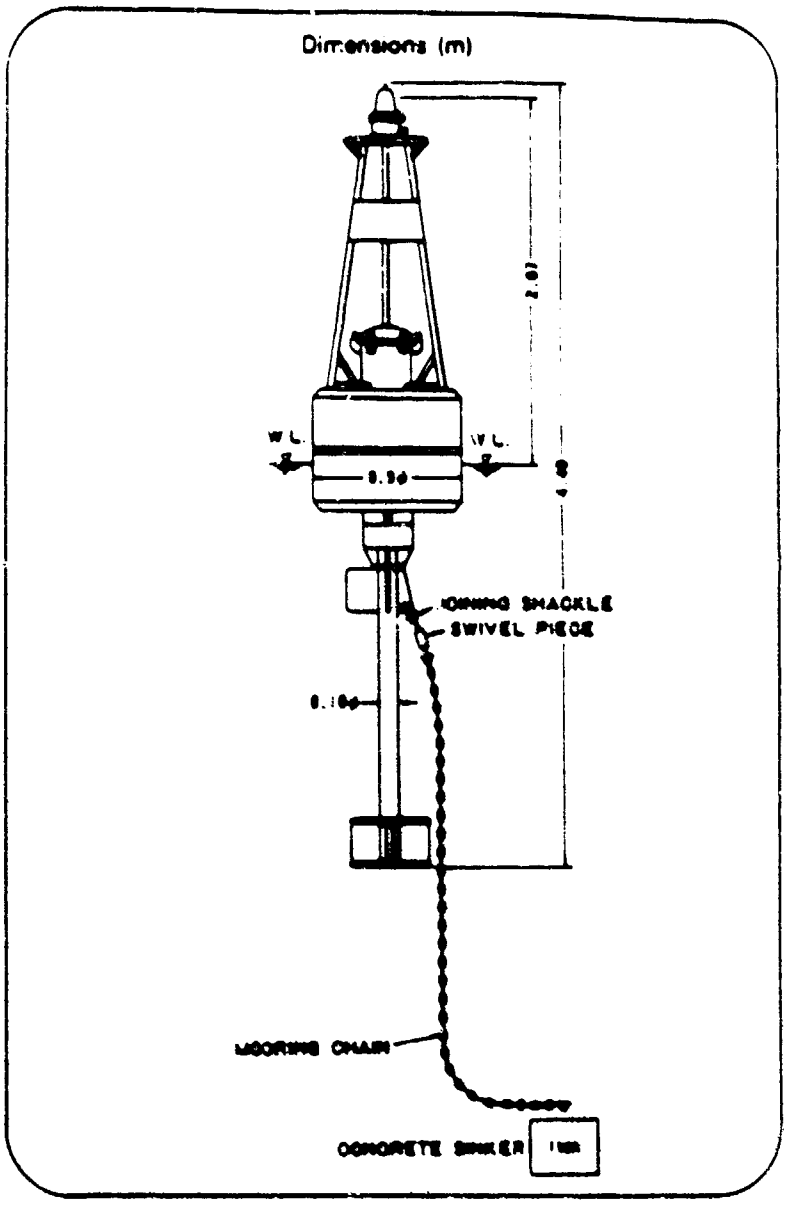
Dimensions (m)
W.L.
W.L.
JOINING SHACKLE
SWIVEL PIECE
MOORING CHAIN
CONCRETE SINKER

Type AB-200

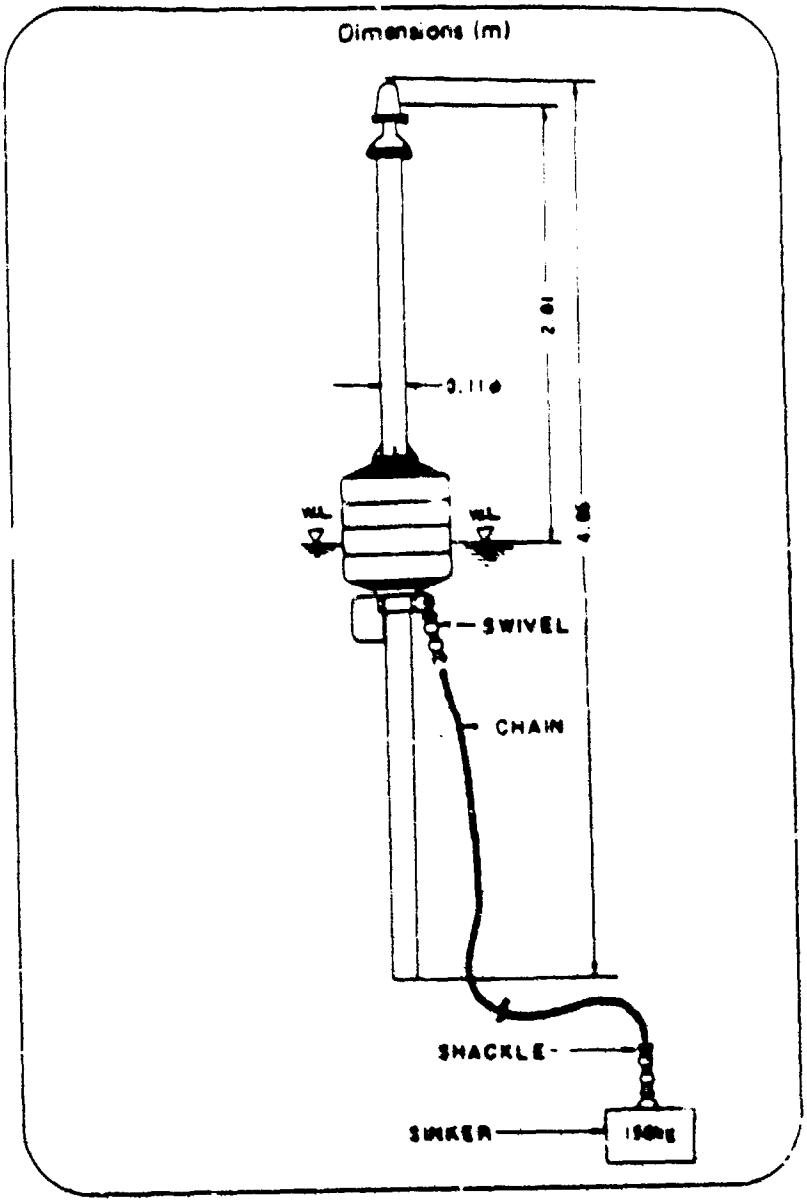

Type SA-200

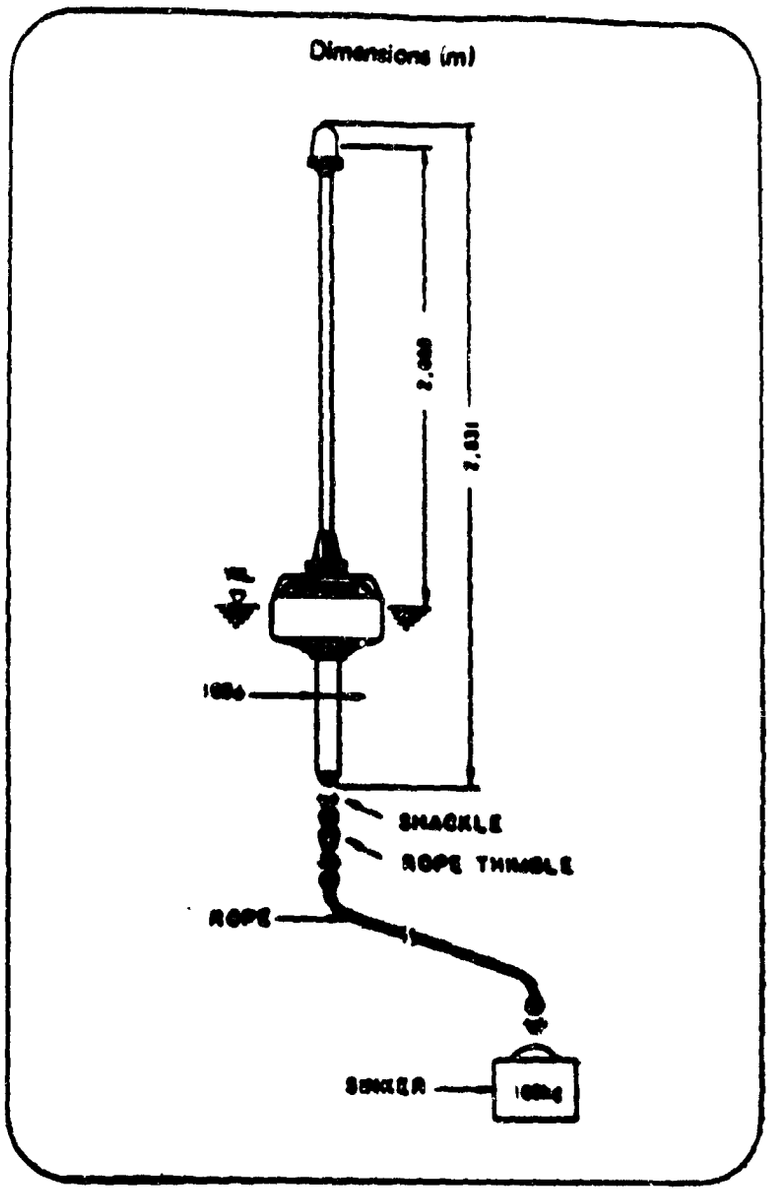

Type CB-200

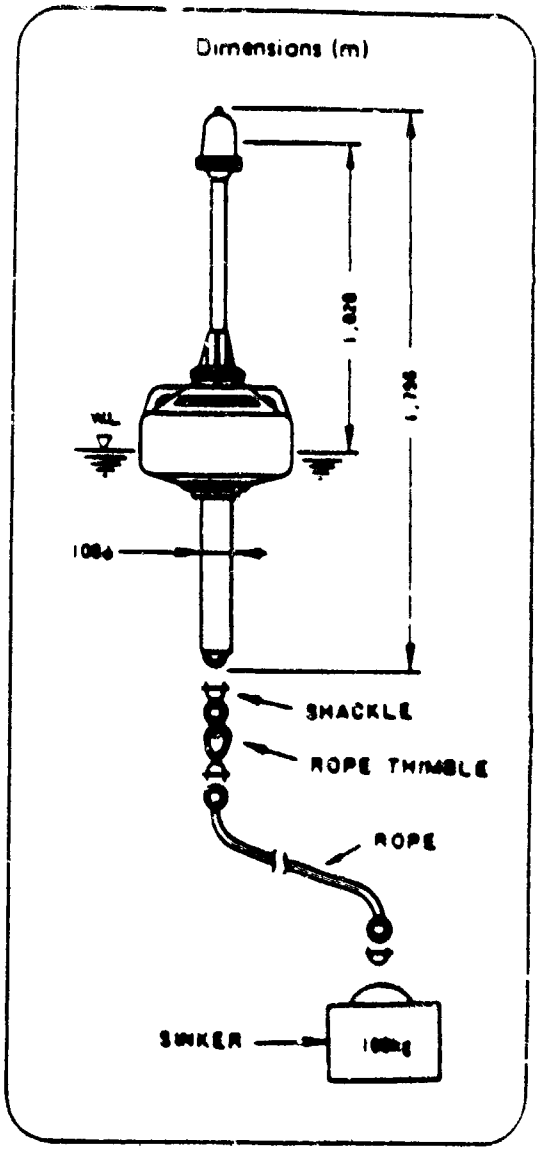

Type CB-100

MLTV-Series, Light Tower Buoys

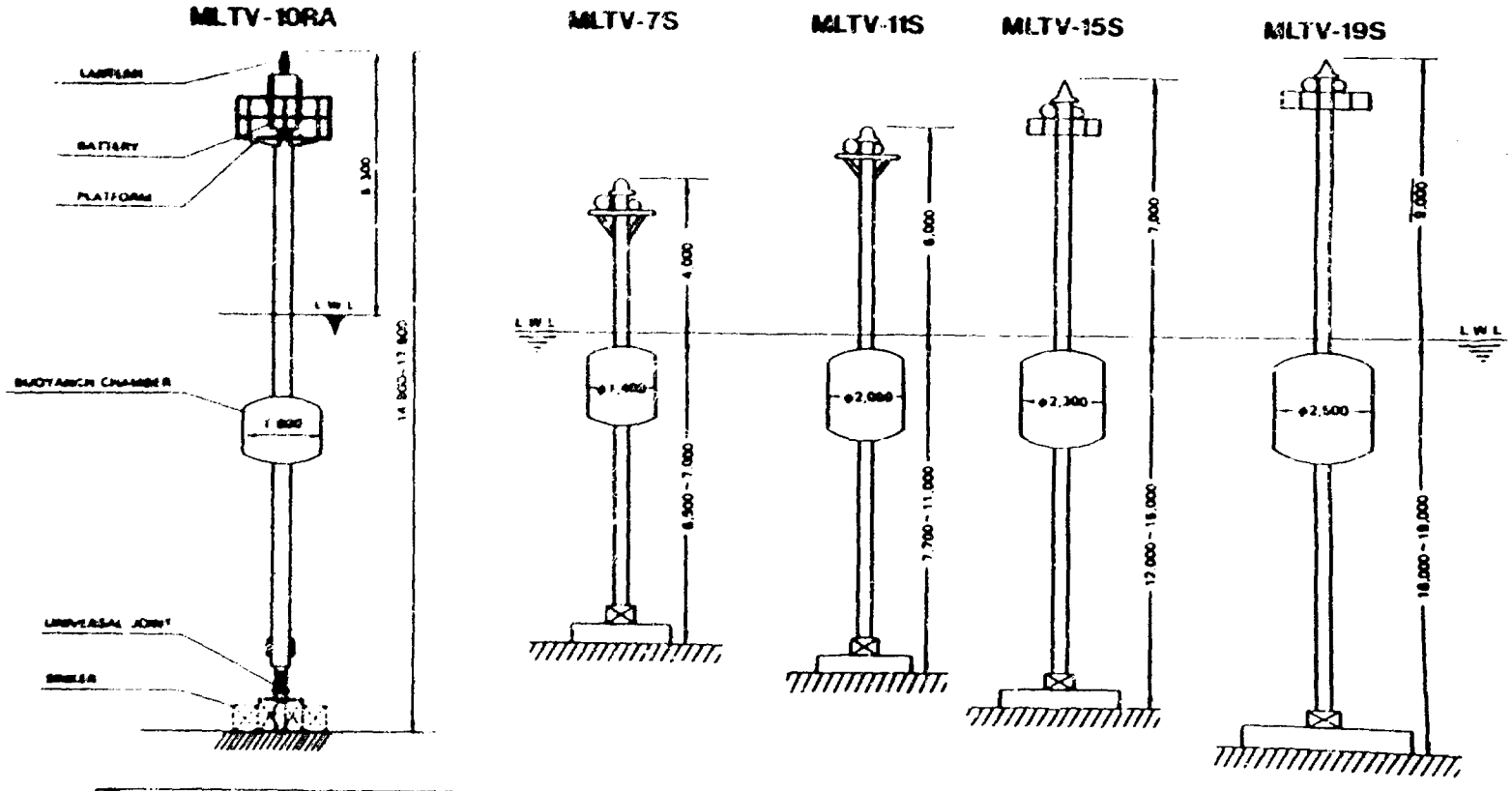

ITEMS \ DESIGNATION	MLTV-7S	MLTV-11S	MLTV-10RA	MLTV-15RA	MLTV-19RA
DEPTH (m)	6m~7m	8m~11m	10m~14m	12m~15m	16m~18m
MAIN MATERIAL	SS41	SS41	SS41	SS41	SS41
LANTERN	L 133 133mm/mLENS	L 133 133m/mLENT	ML 166 166m/mLENS	ML 155 155m/mLENS	ML 155 155m/mLENS
INTENSITY (cd)	12V5W 58cd	12V5W 58cd	12V13 8W 240cd	12V13 8W 240cd	12V13, 8W 240cd
LUMINOUS RANGE	10.7km	10.7km	16.8km	16.8km	16.8km
POWER SOURCE	SOLAR SYSTEM w/ BATTERY	SOLAR SYSTEM w/ BATTERY	SOLAR SYSTEM w/ BATTERY	SOLAR SYSTEM w/ BATTERY	SOLAR SYSTEM w/ BATTERY
CURRENT (amp)	LESS THAN 2	LESS THAN 2	LESS THAN 2.4	LESS THAN 2.4	LESS THAN 2.4
RADAR REFLECTOR	OPTION	OPTION	OPTION	OPTION	OPTION
SINKER	CONCRETE SINKER 4ton	CONCRETE SINKER 5ton	[illegible] SINKER	CONCRETE SINKER 10t	CONCRETE SINKER

THIS PAGE INTENTIONALLY LEFT BLANK

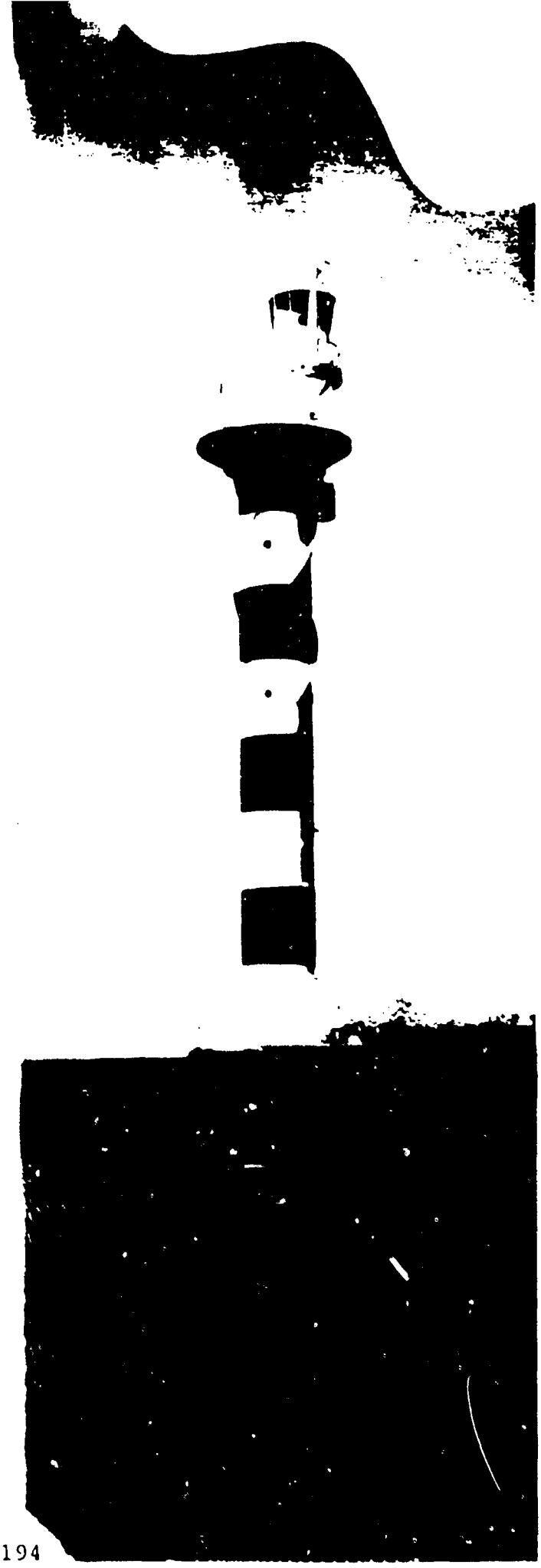

Zeni Light.

AIDS TO NAVIGATION

ZENI LITE BUOY CO., LTD.

C-194

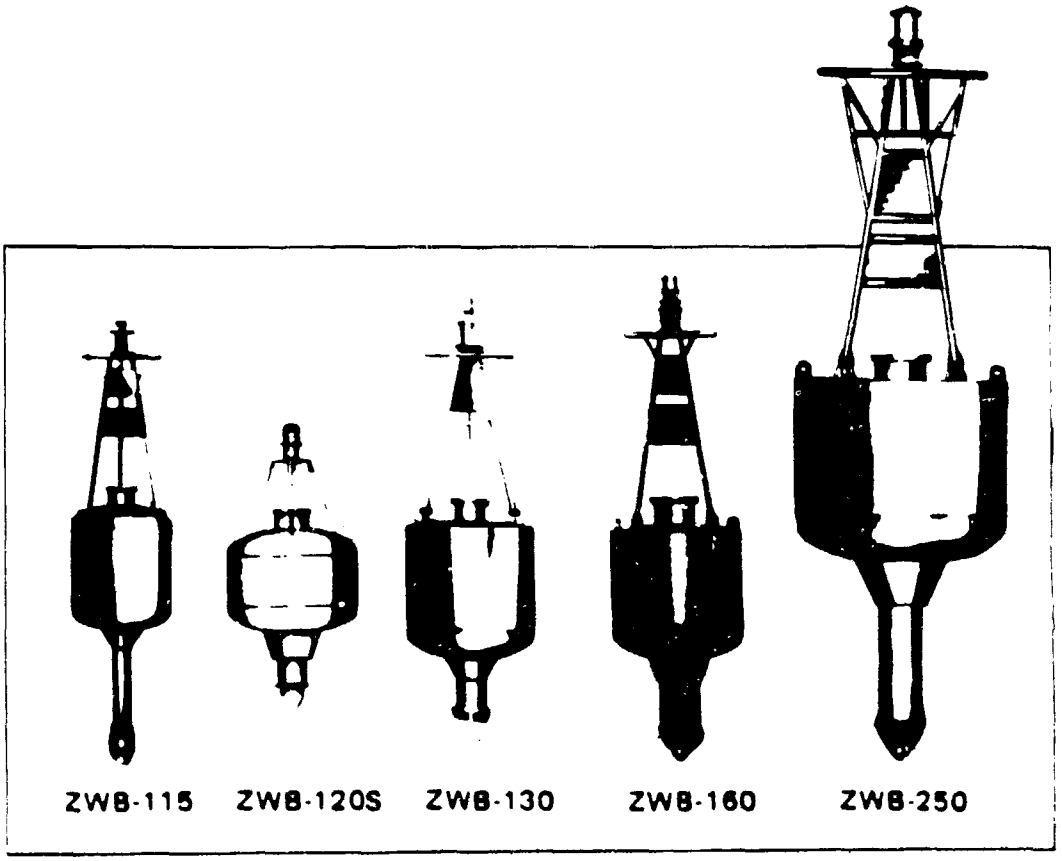

Item \ Designation	ZWB-115	ZWB-120S	ZWB-130	ZWB-160	ZWB-250
Float Diameter (m)	1.15	1.2	1.3	1.6	2.5
Focal Plane Height (m)	2.9	1.4	3.1	3.8	5.7
Draft (m)	2.28	1.06	1.30	2.01	3.04
Total Weight (ton)	0.68	0.41	0.47	1.7	3.6
Total Buoyancy (ton)	1.40	0.89	1.7	3.3	9.9
Main Material	Steel	Steel	Aluminum Alloy	Steel & Aluminum Alloy	Steel & Aluminum Alloy

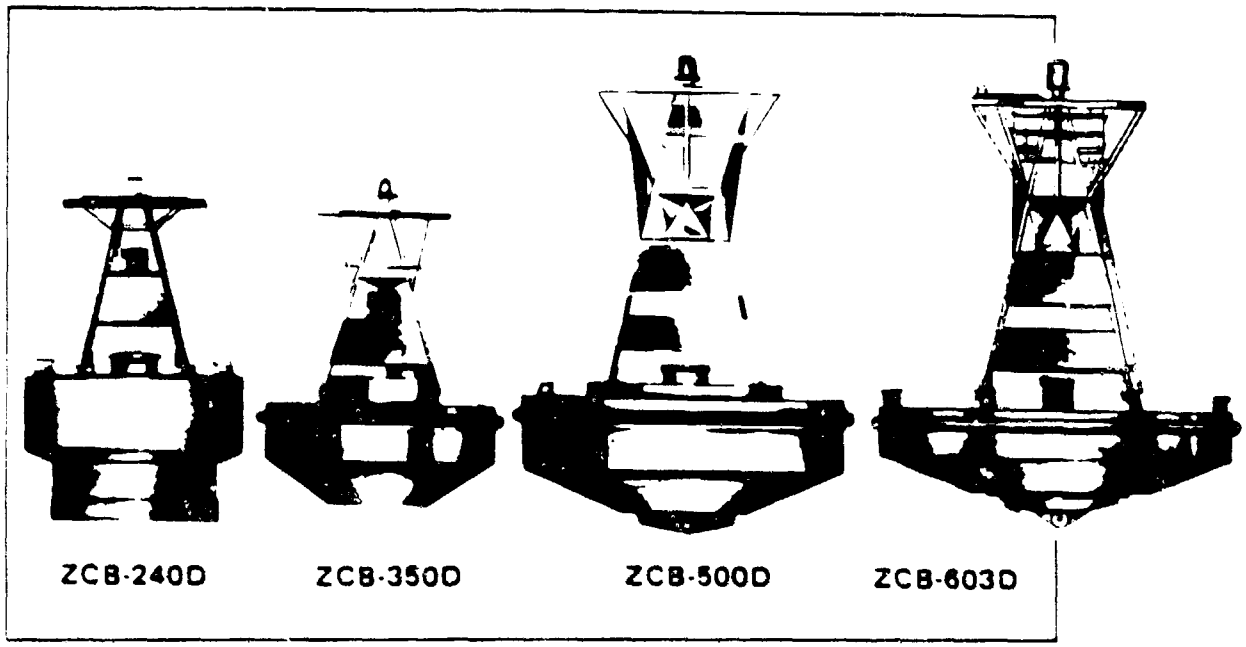

Item \ Designation	ZCB-160	ZCB-240D	ZCB-350D	ZCB-500D	ZCB-603D	ZCB-800D	ZCB-1000D	ZCB-1200D
Float Diameter (m)	1.6	2.4	3.5	5.0	6.0	8.0	10.0	12.0
Focal Plane Height (m)	3.7	2.7	3.8	6.1	6.2	8.0	10.0	12.0
Draft (m)	3.15	1.0	0.8	1.1	1.0	2.5	1.1	1.4
Total Weight (ton)	1.25	1.8	5.0	9.7	7.7	38.5	62.0	90.0
Total Buoyancy (ton)	3.33	4.3	11.3	29.1	32.0	92.0	136.0	220.0
Main Material	Steel & Aluminum Alloy	Steel	Steel	Steel	Steel & Aluminum Alloy	Steel & Aluminum Alloy	Steel & Aluminum Alloy	Steel & Aluminum Alloy
Max. Current (kt)	4	4	5	6	7	8	10	12

JAPAN MFG. 3-3

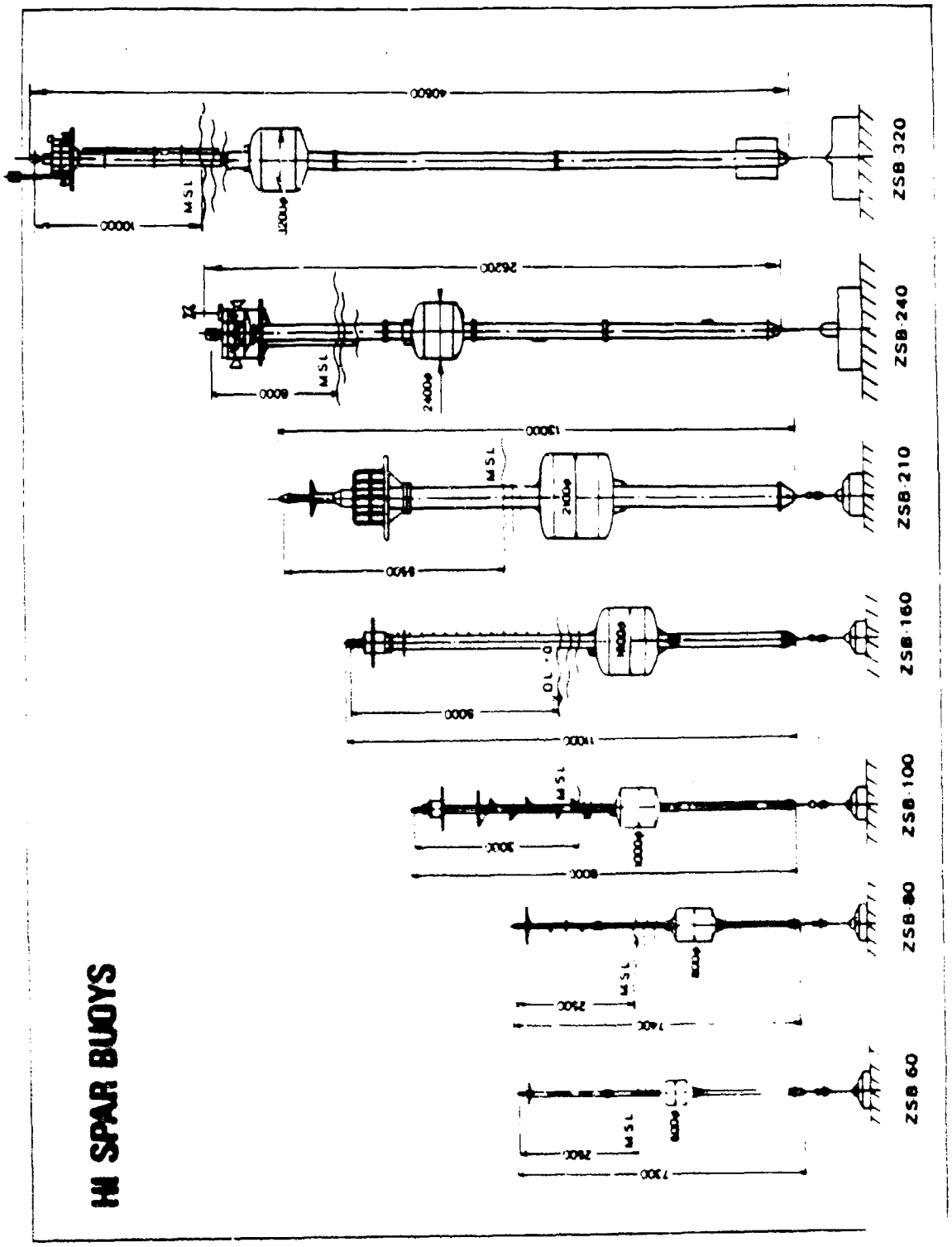
HI SPAR BUOYS
ZSB 320
ZSB-240
ZSB-210
ZSB-160
ZSB-100
ZSB-80
ZSB 60
MSL

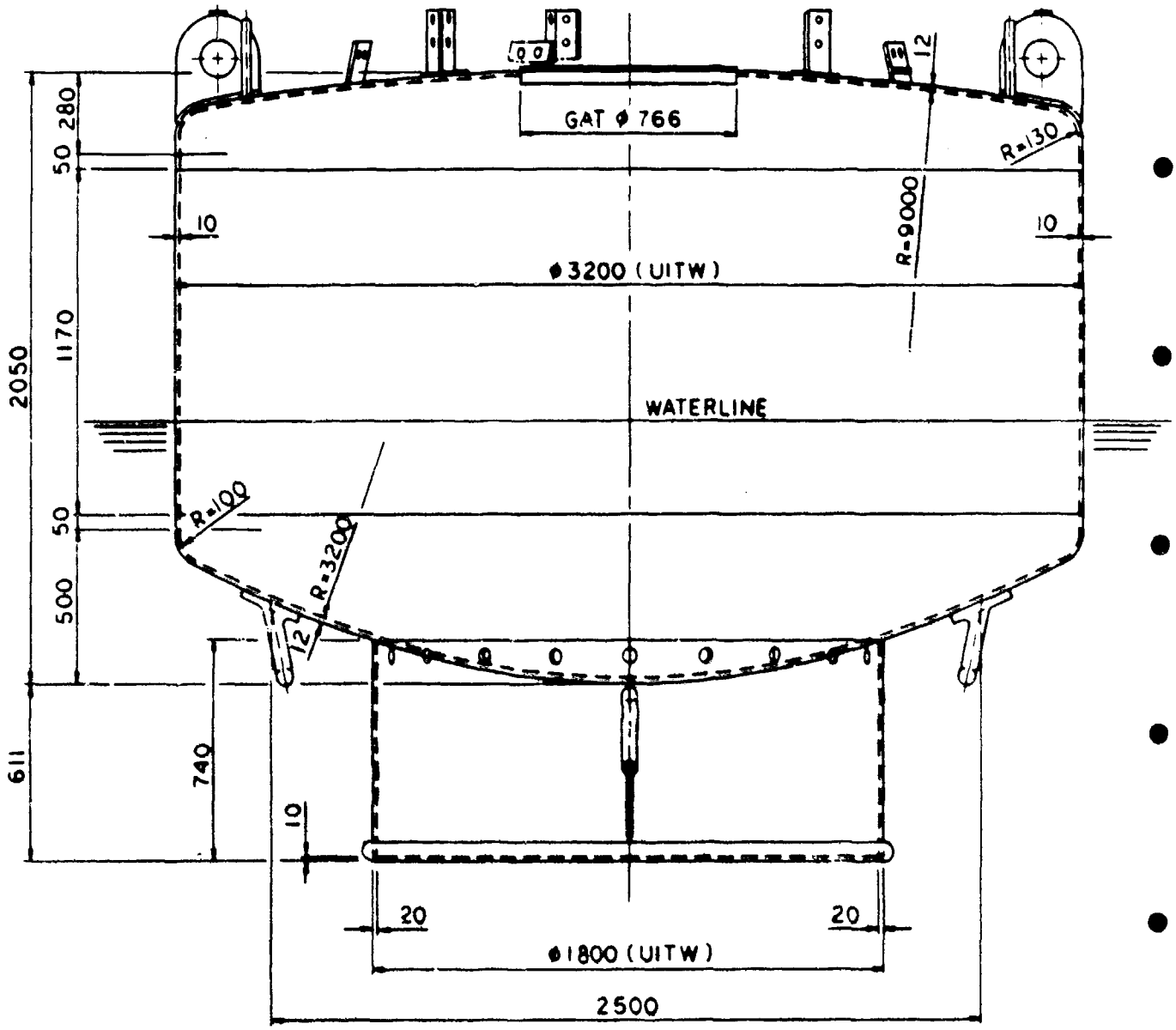
GAT ϕ 766
R=130
12
R=9000
10
10
ϕ3200 (UITW)
WATERLINE
R=100
R=3200
12
280
50
1170
2050
50
500
611
740
10
20
20
ϕ1800 (UITW)
2500

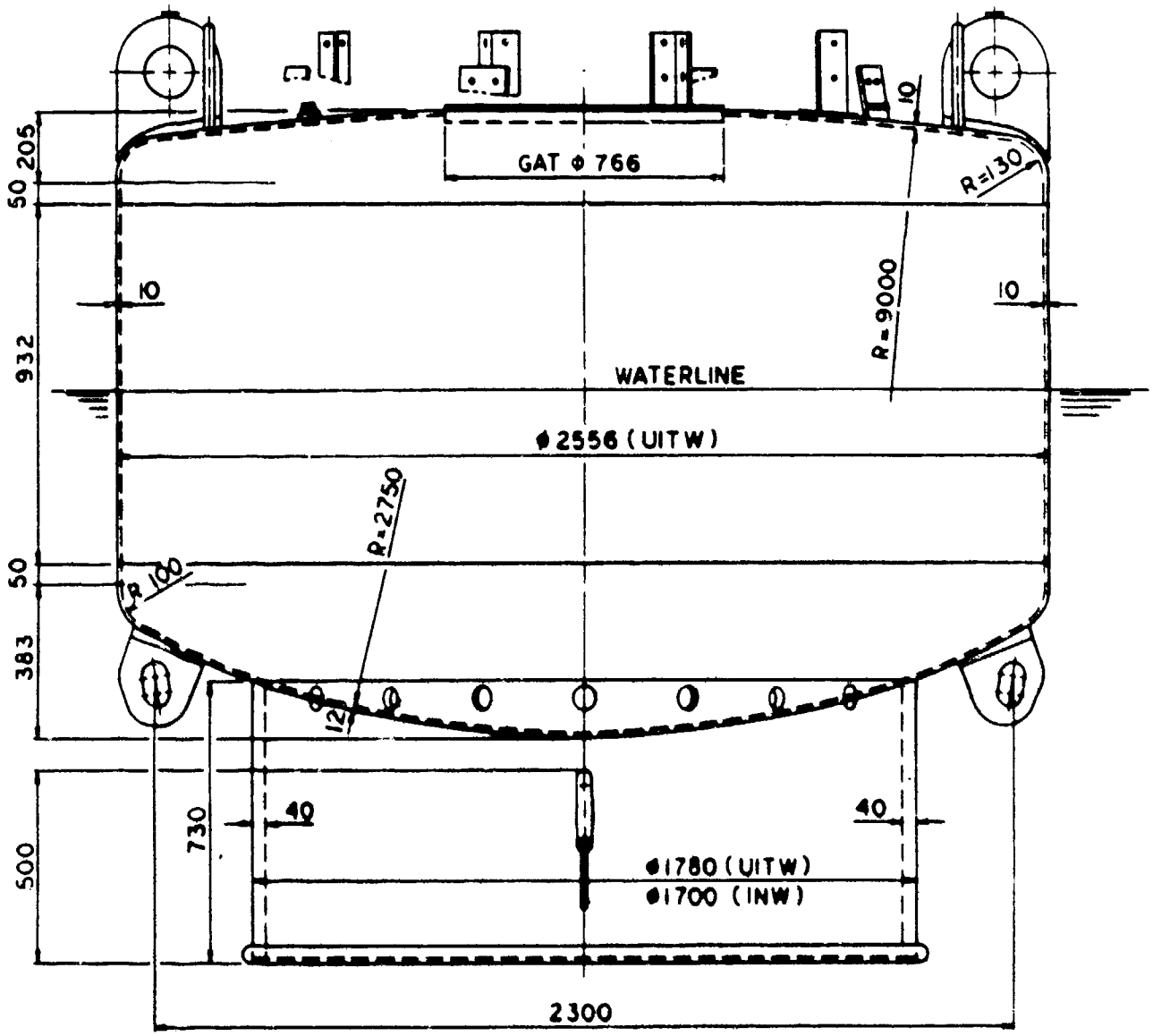
GAT ϕ 766
R=130
10
R=9000
10
10
205
50
932
WATERLINE
ϕ 2556 (UITW)
R=2750
50
R 100
383
12
730
40
40
500
ϕ1780 (UITW)
ϕ1700 (INW)
2300

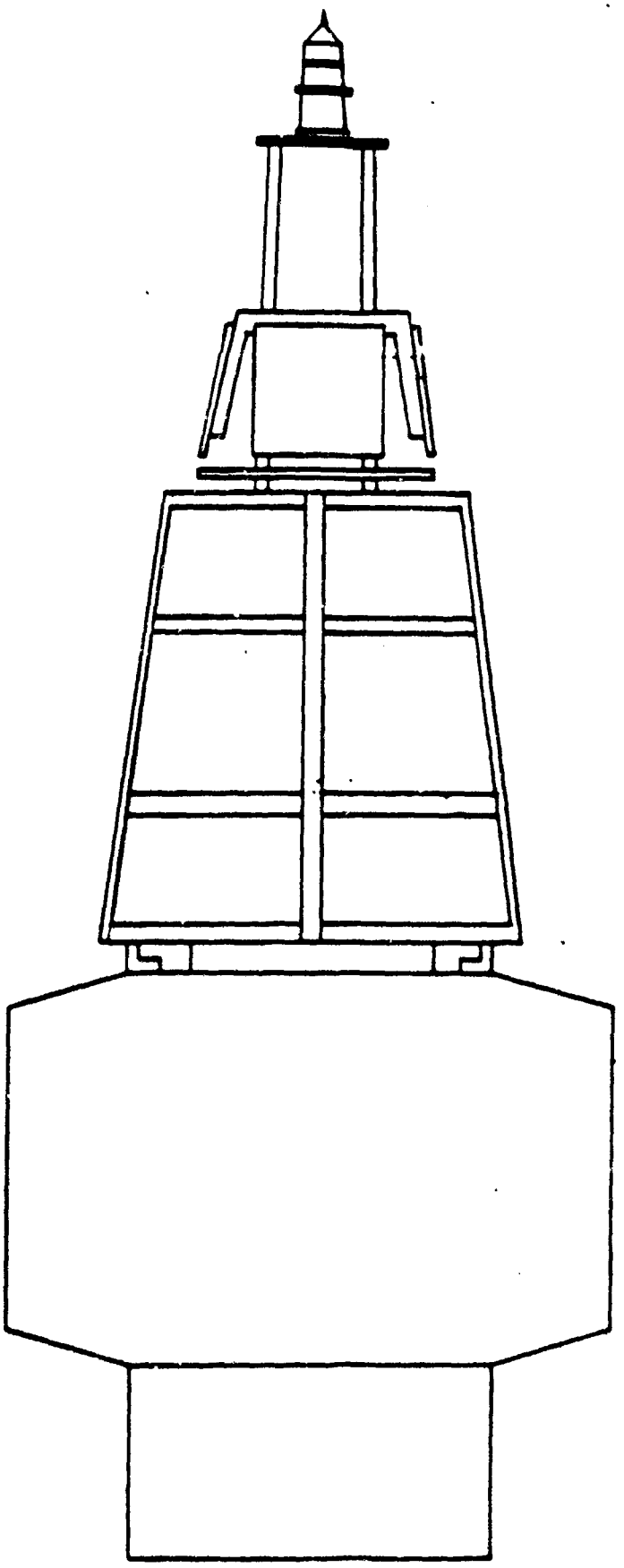

THIS PAGE INTENTIONALLY LEFT BLANK

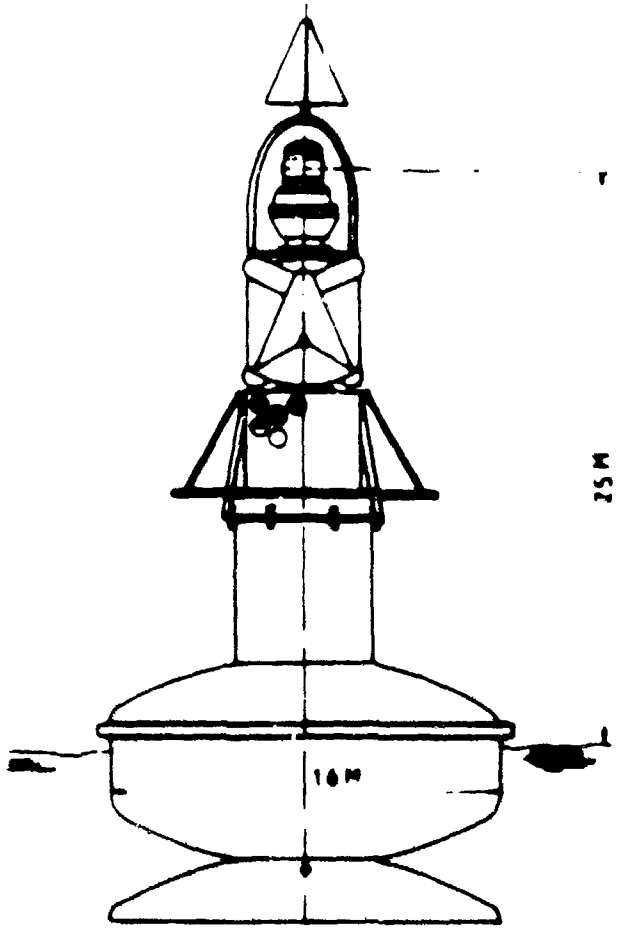

SW 160 EZ

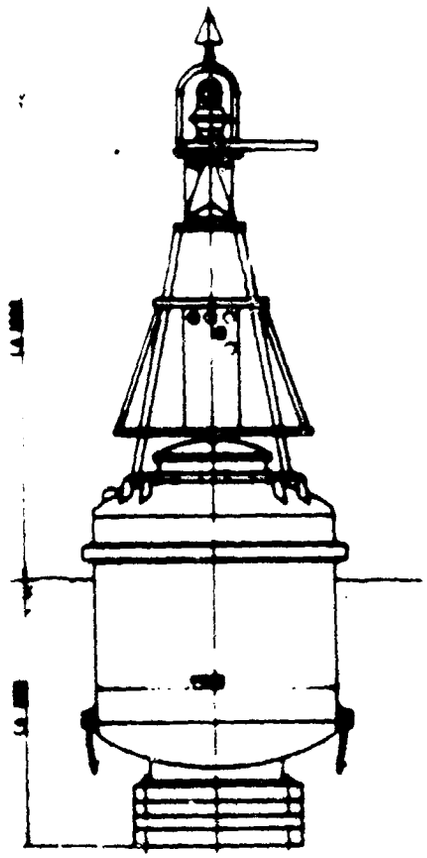

SW 180 BZ

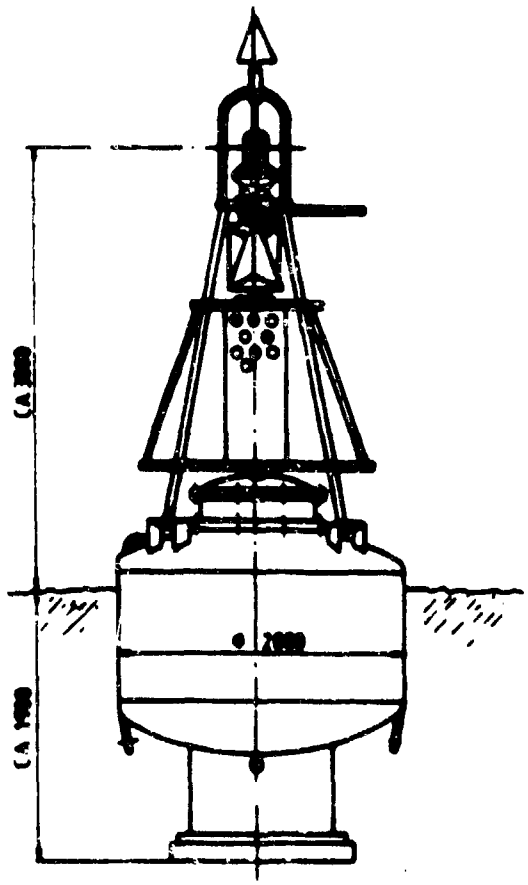

SW 200 EZ

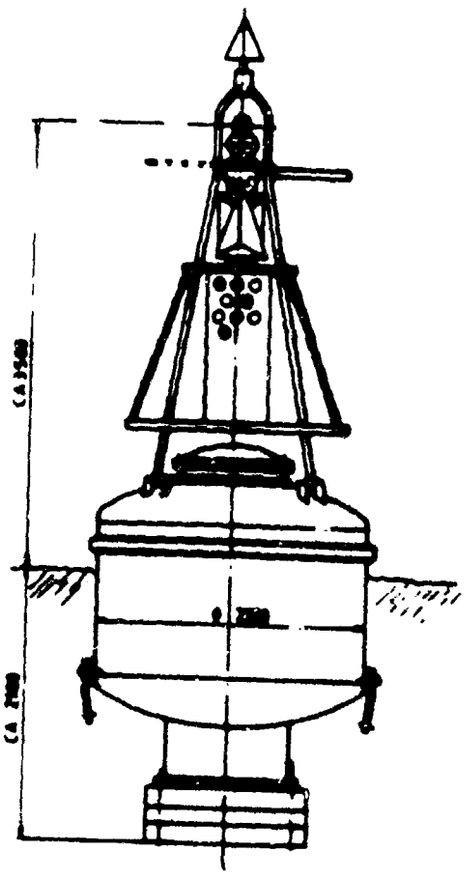

SW 220 EZ

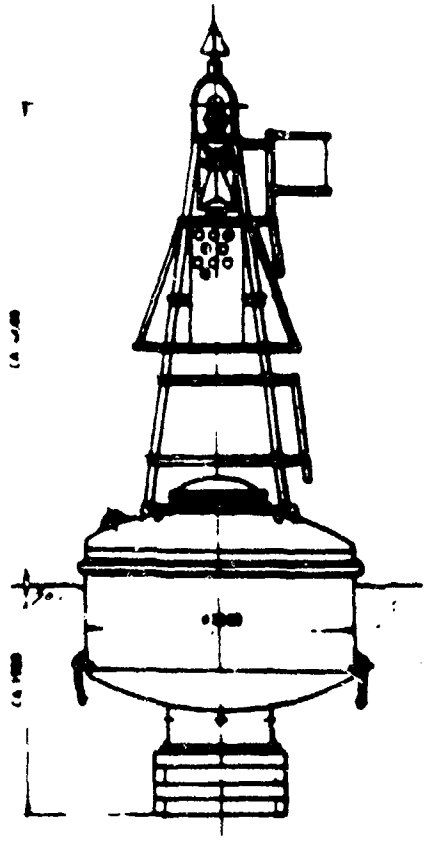

SW 200 EZ

THIS PAGE INTENTIONALLY LEFT BLANK

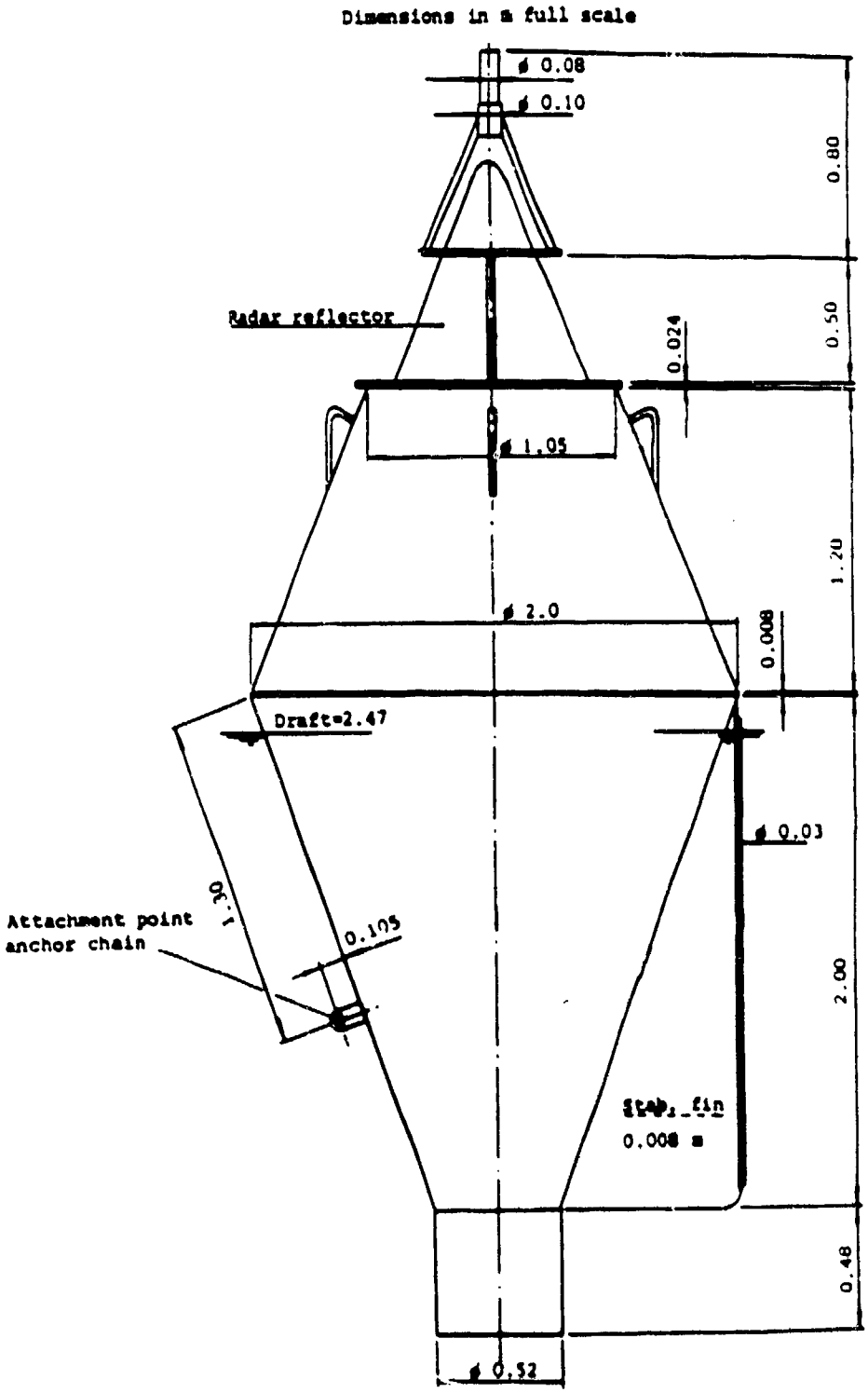

NETHERLANDS MFG 2-1

THIS PAGE INTENTIONALLY LEFT BLANK

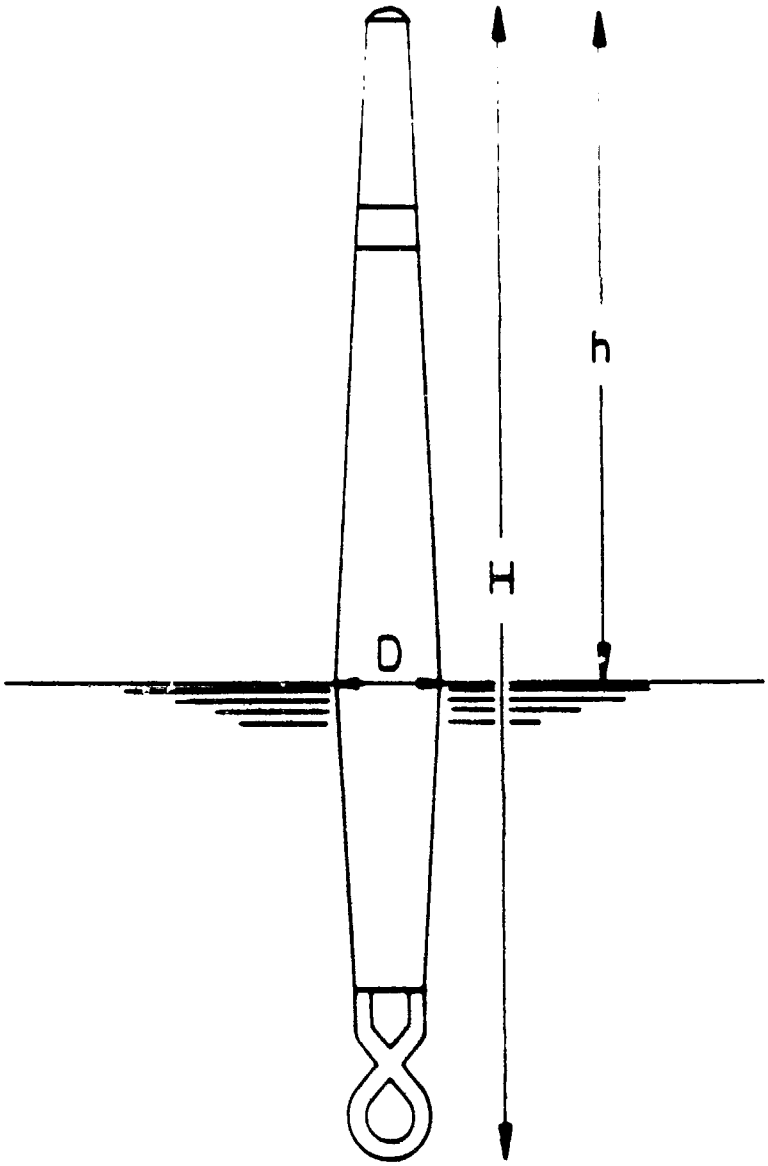
h
H
D

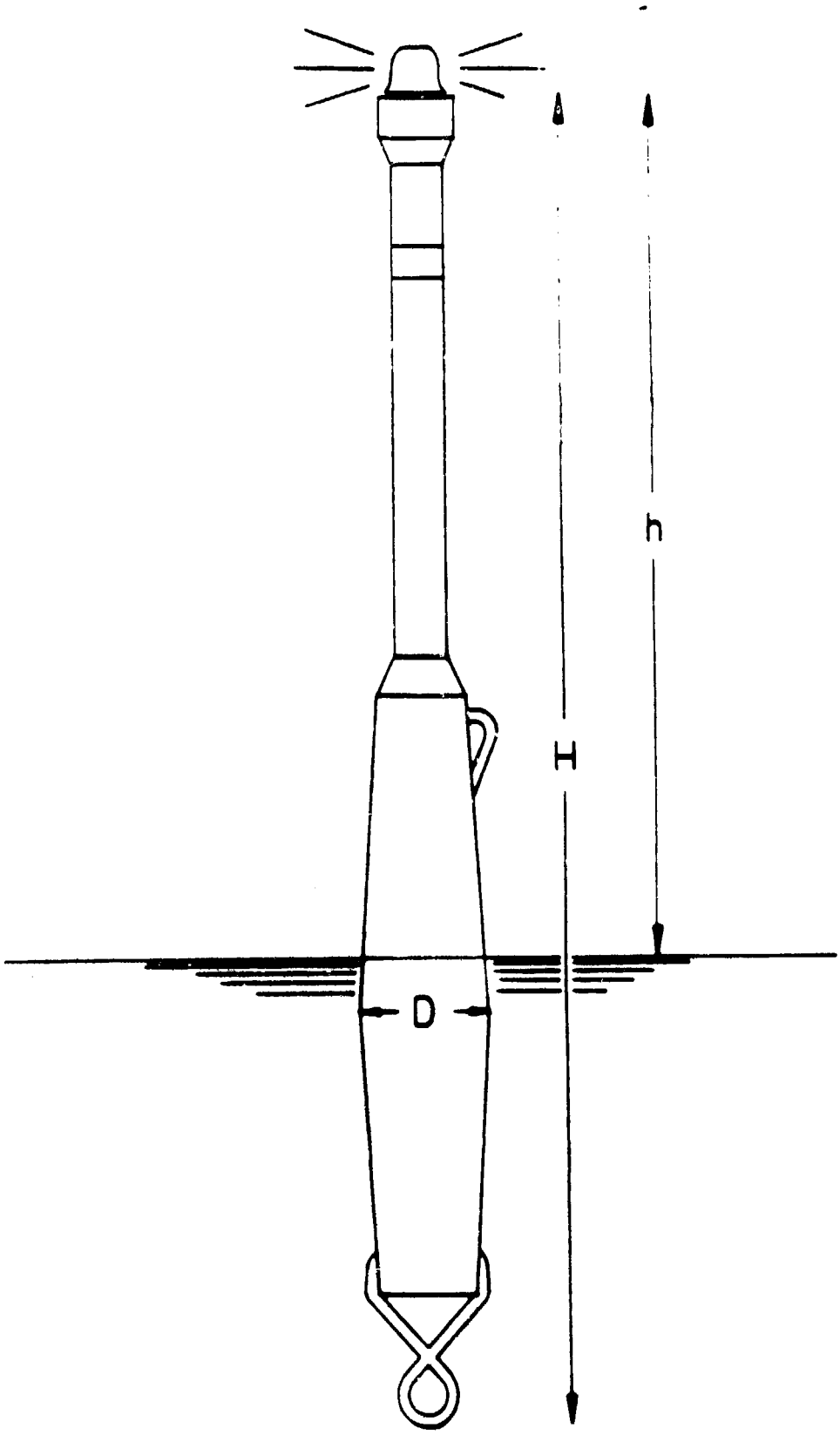
h
H
D

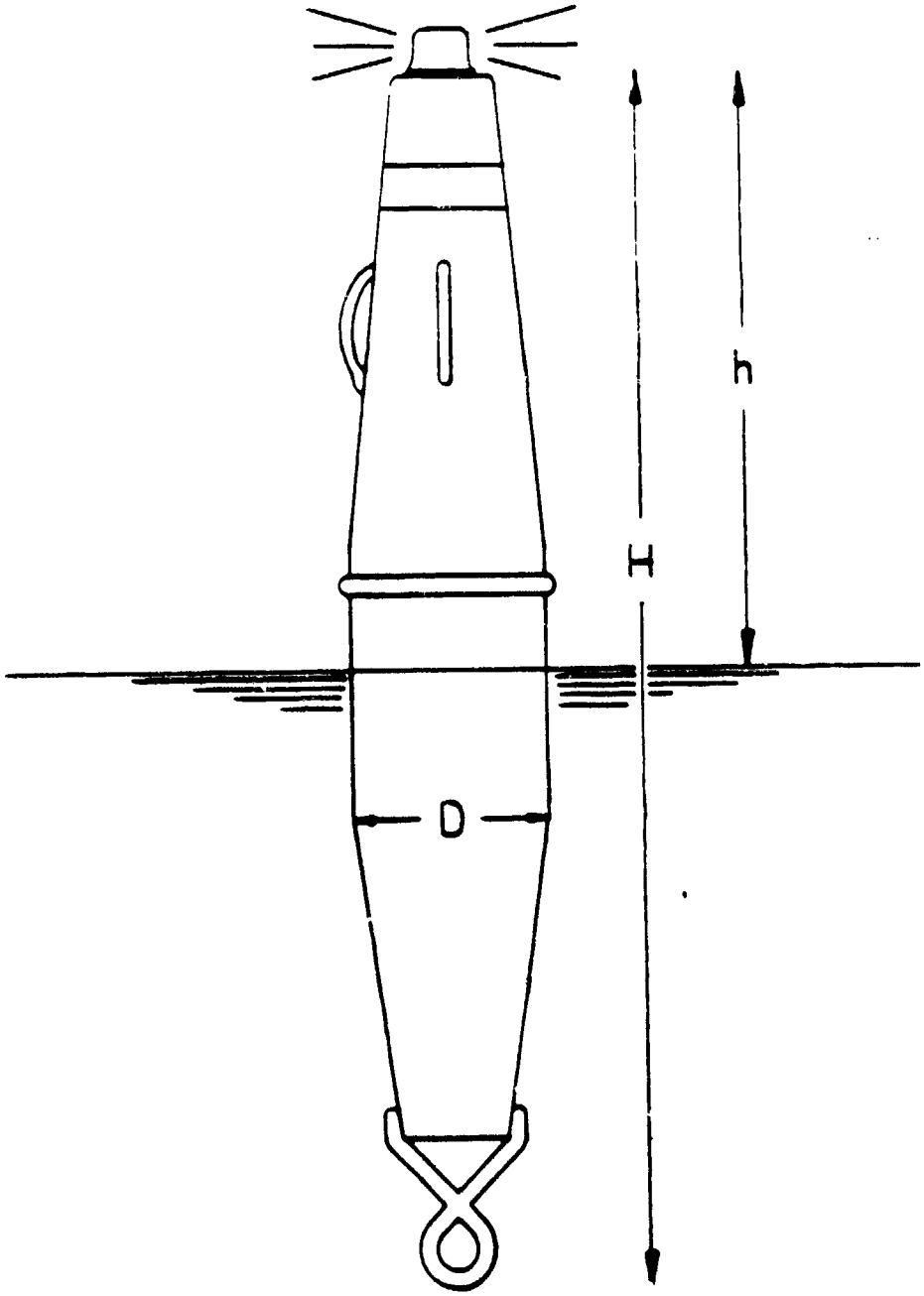
h
H
D

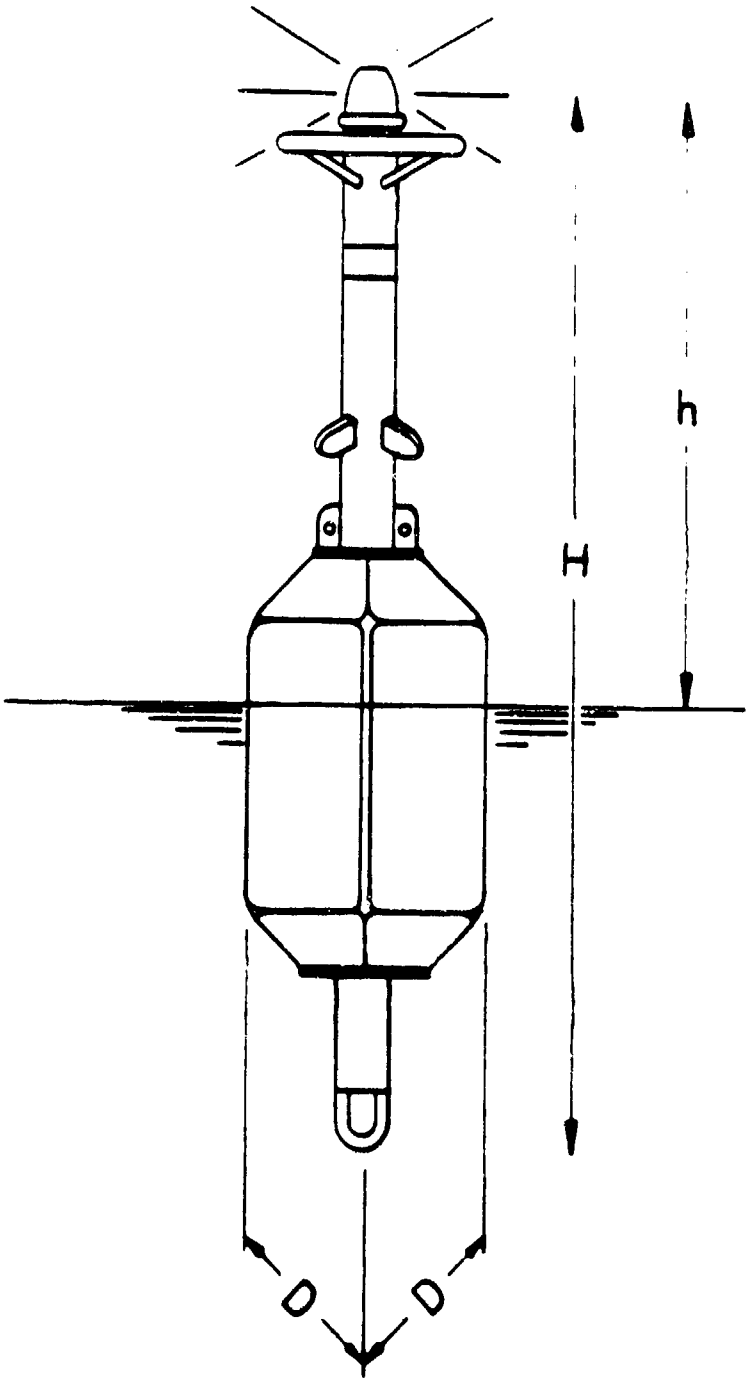
h
H
D
D

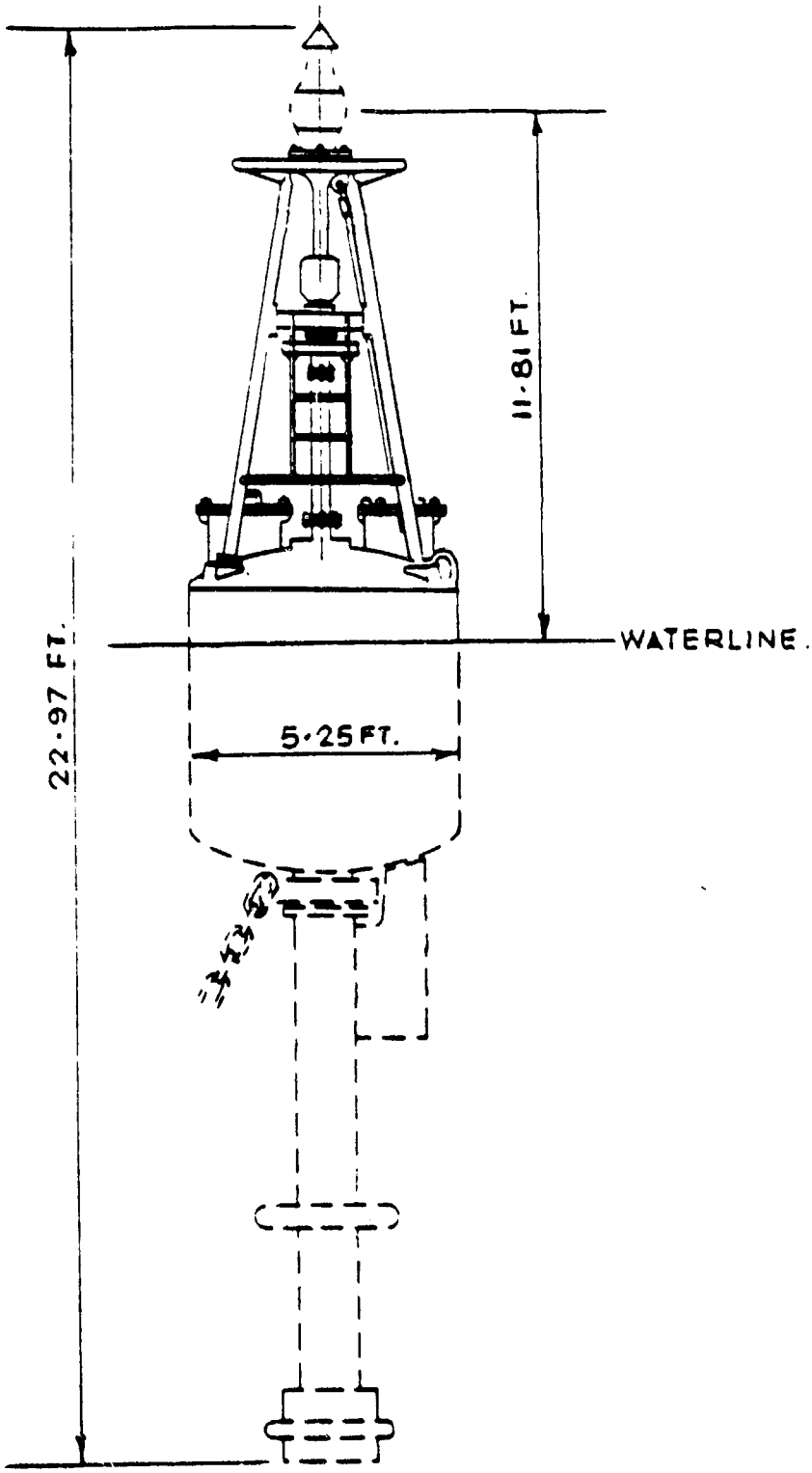

NORWAY -5

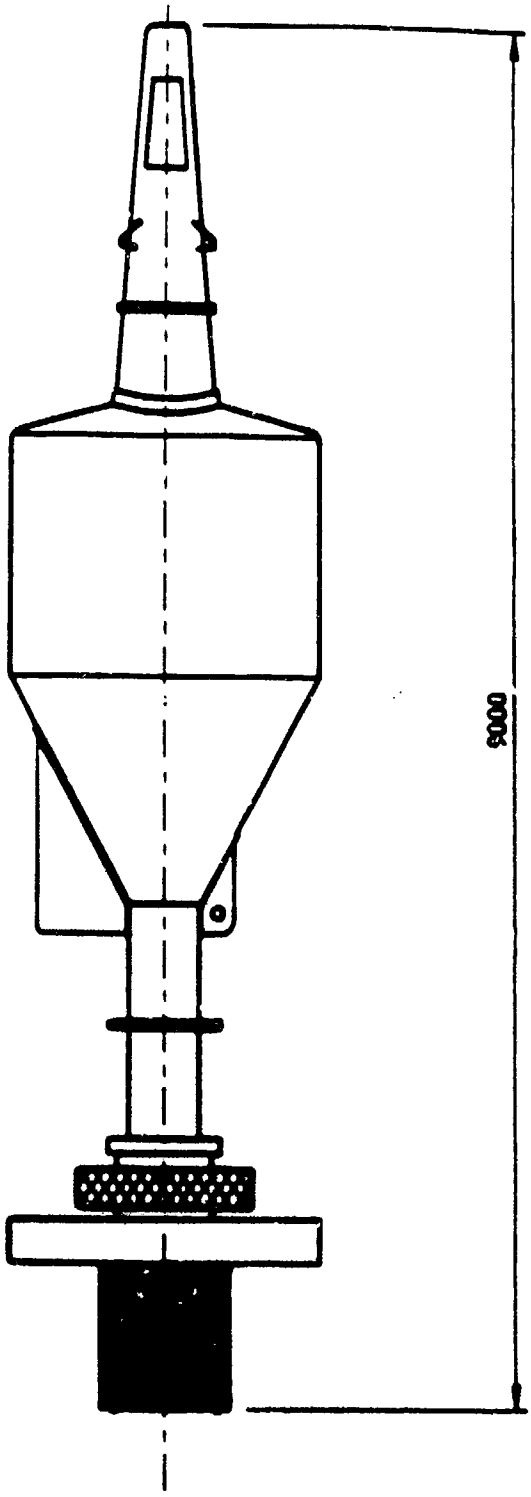
9000

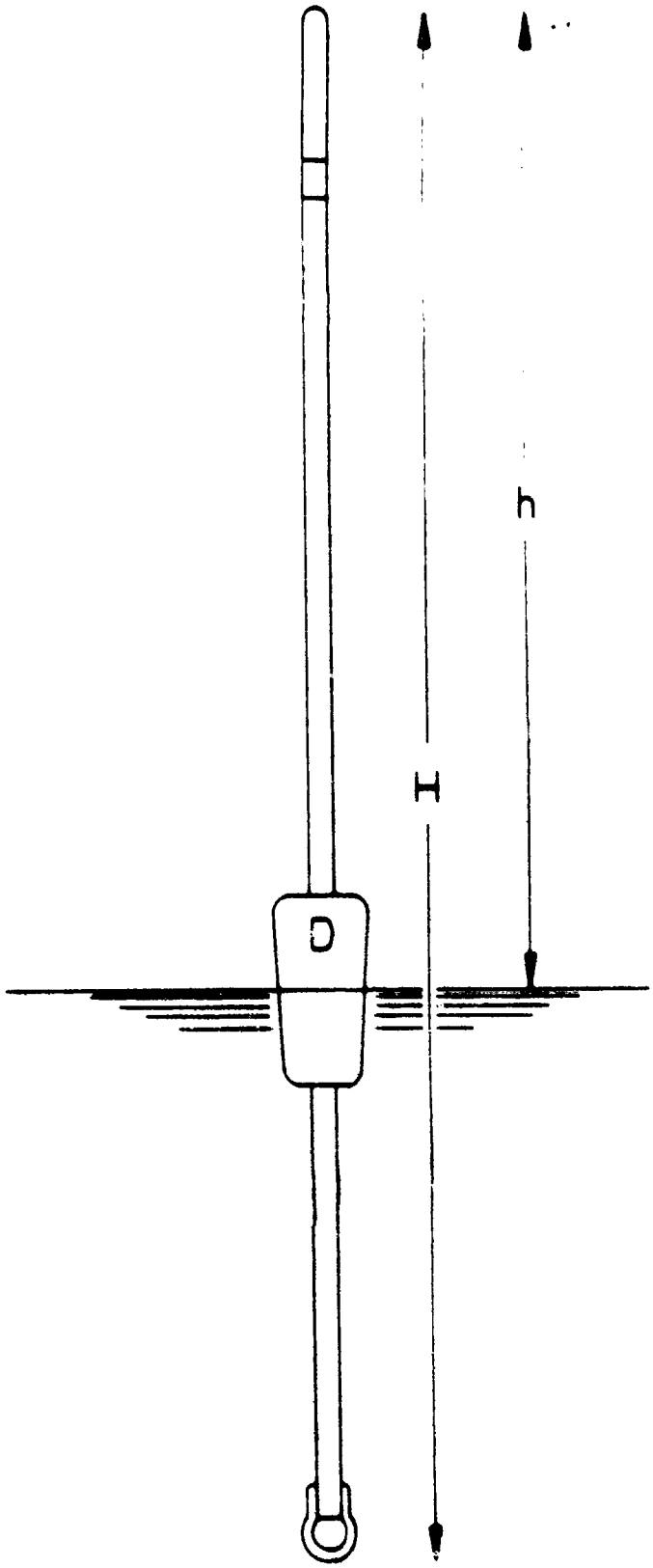
h
H
D

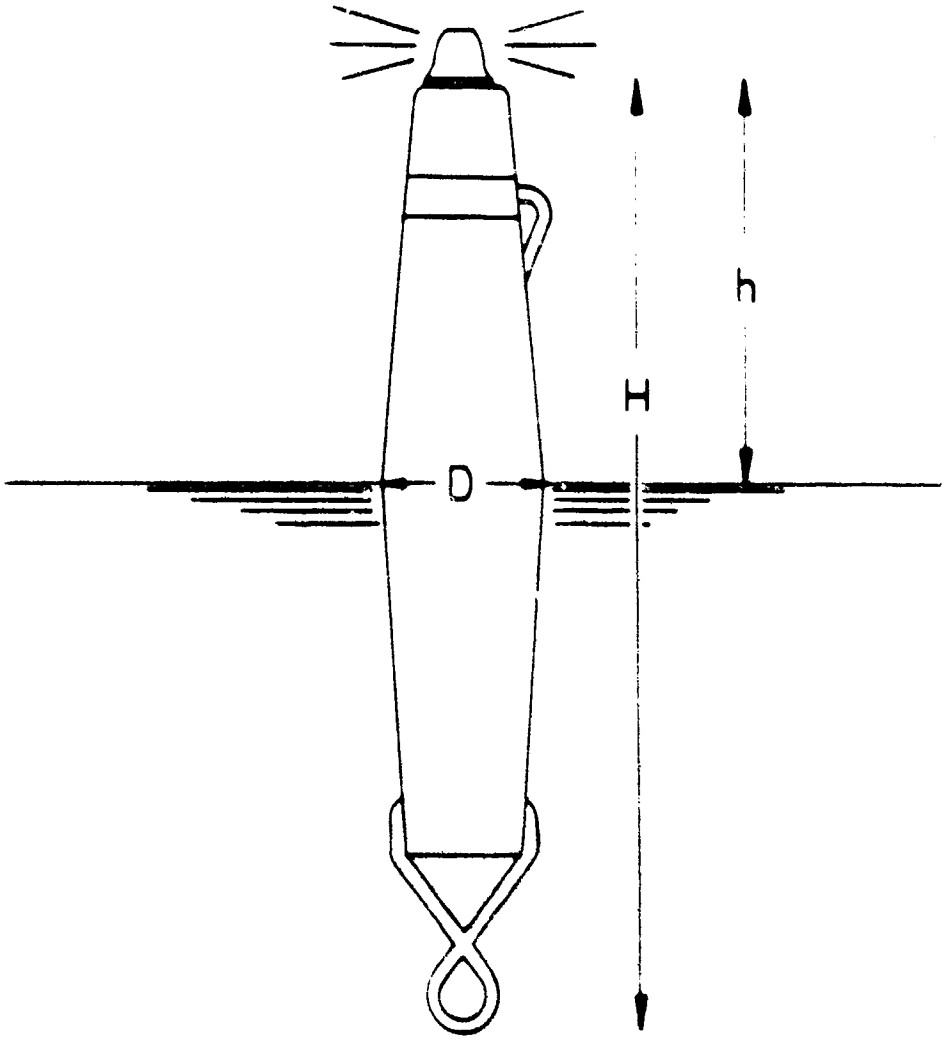
h
H
D

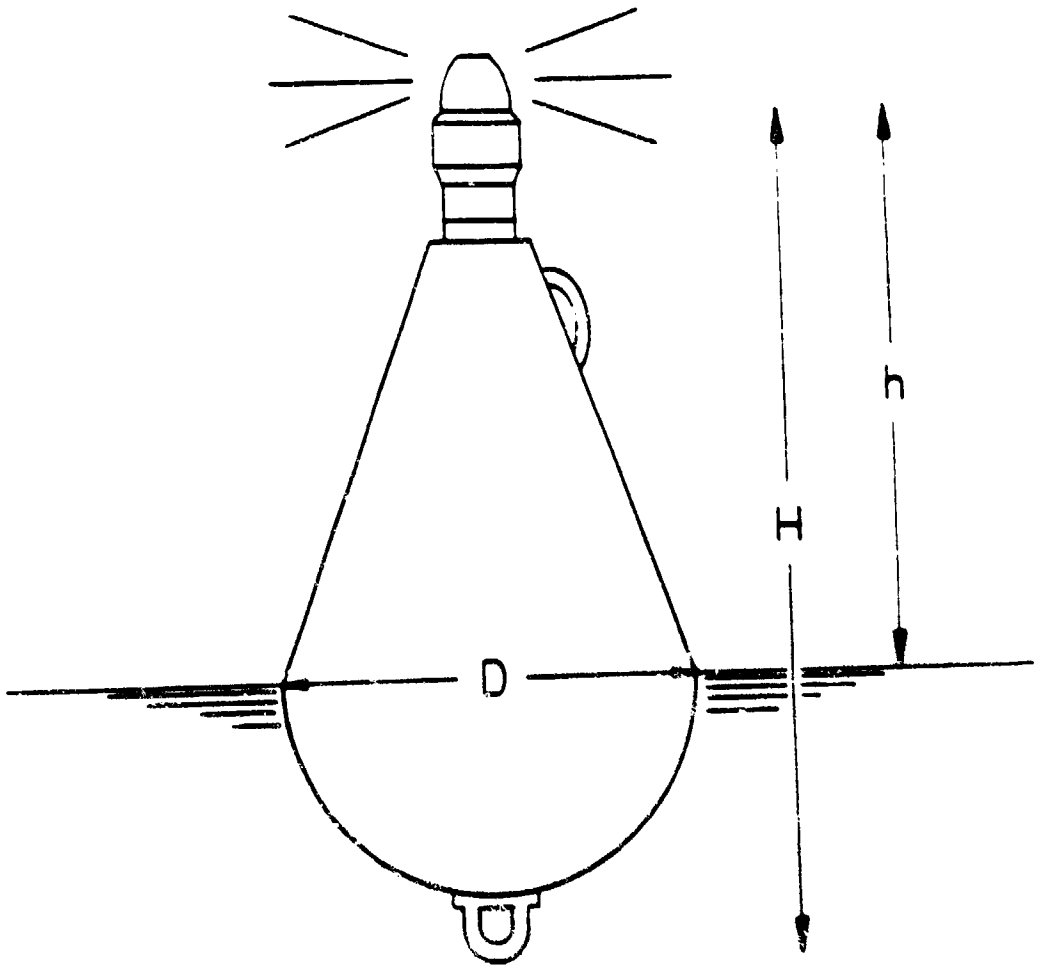
h
H
D

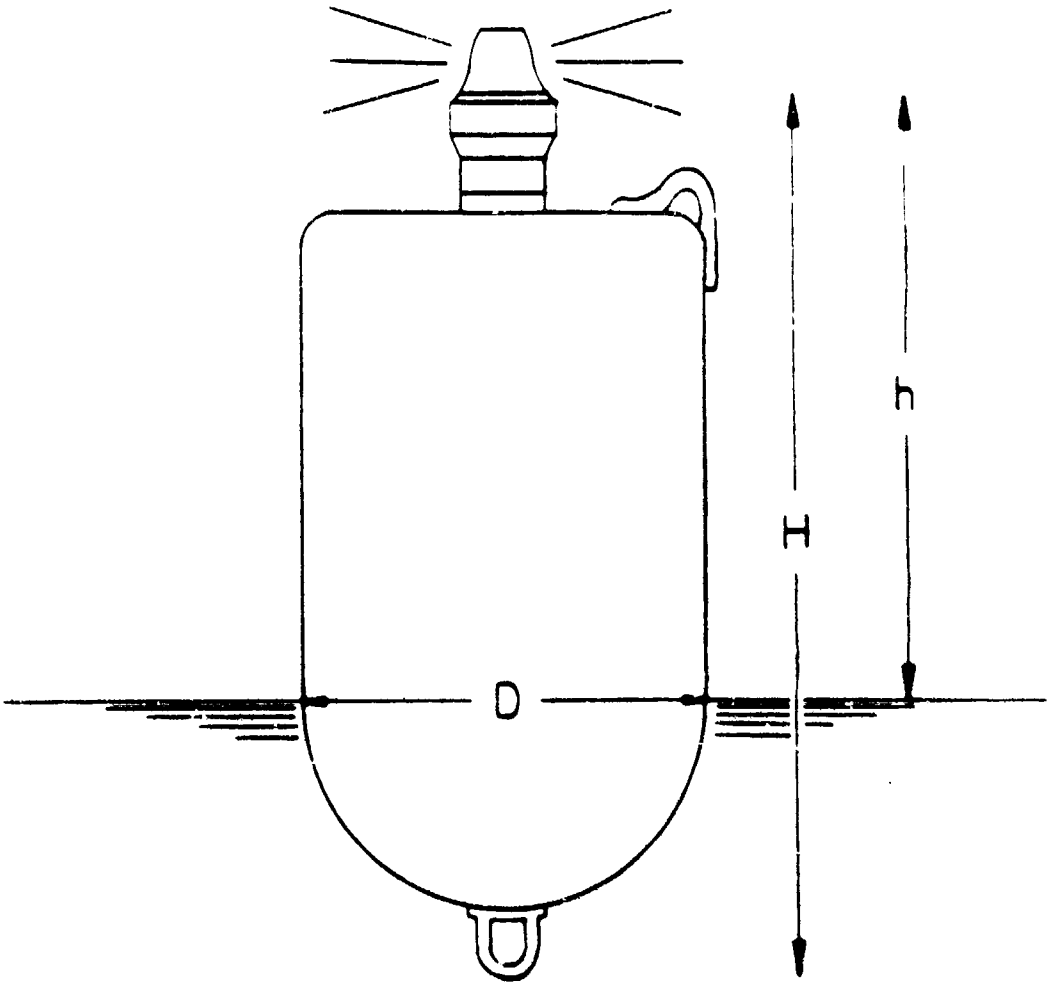

C-219

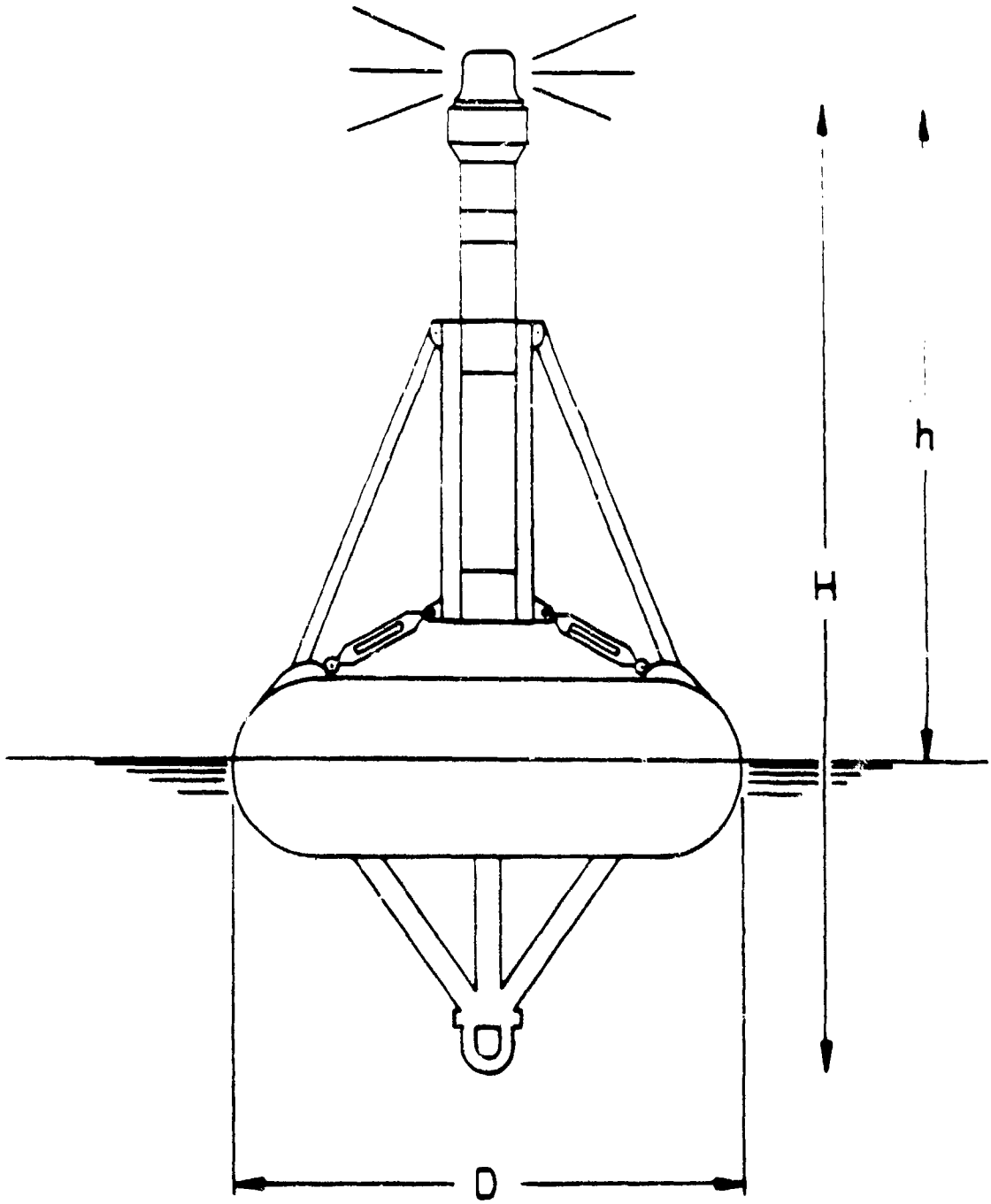

C-220

NORMAY MFG. - 1-5

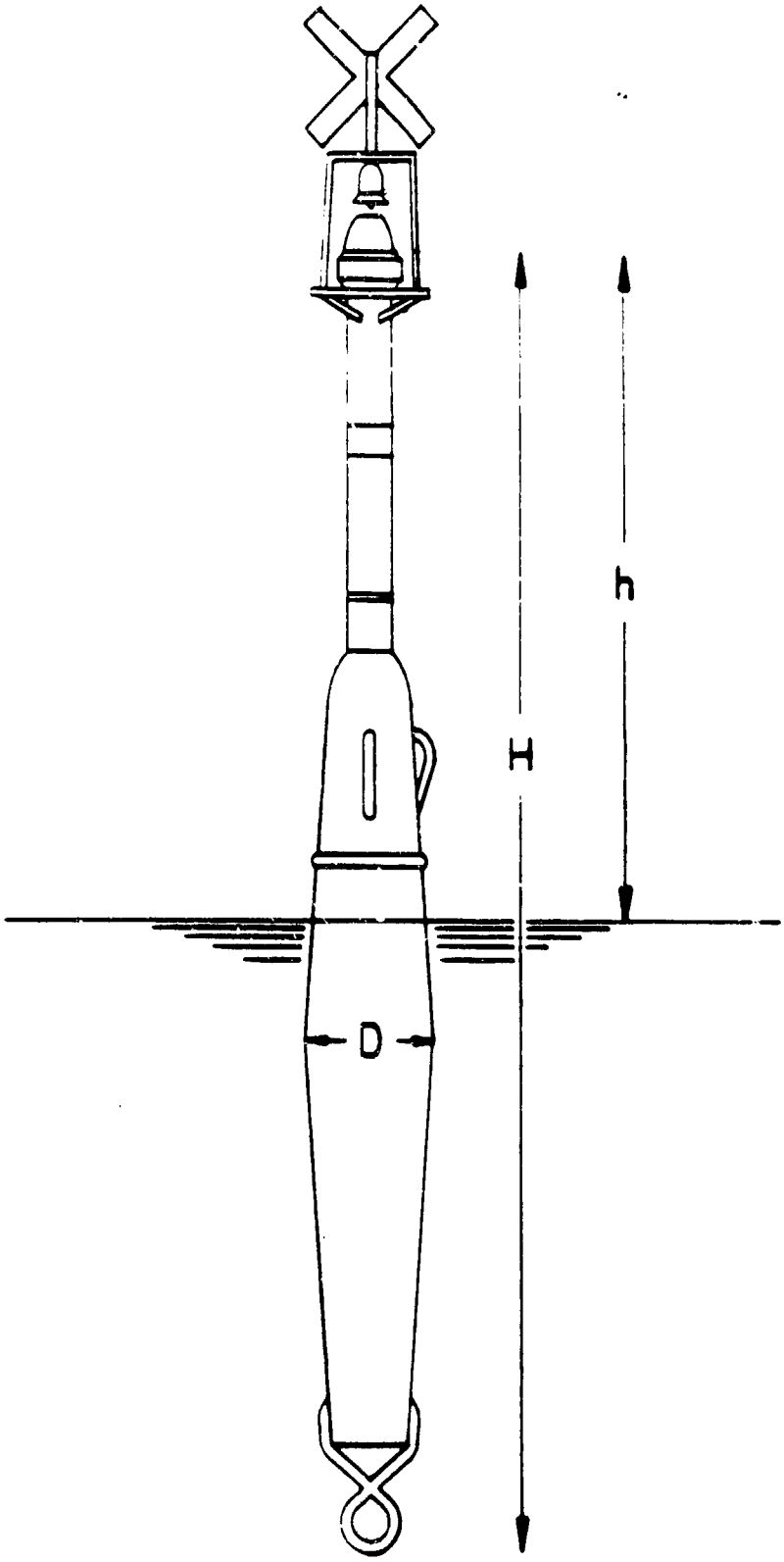

NORWAY MFG. - 1-6

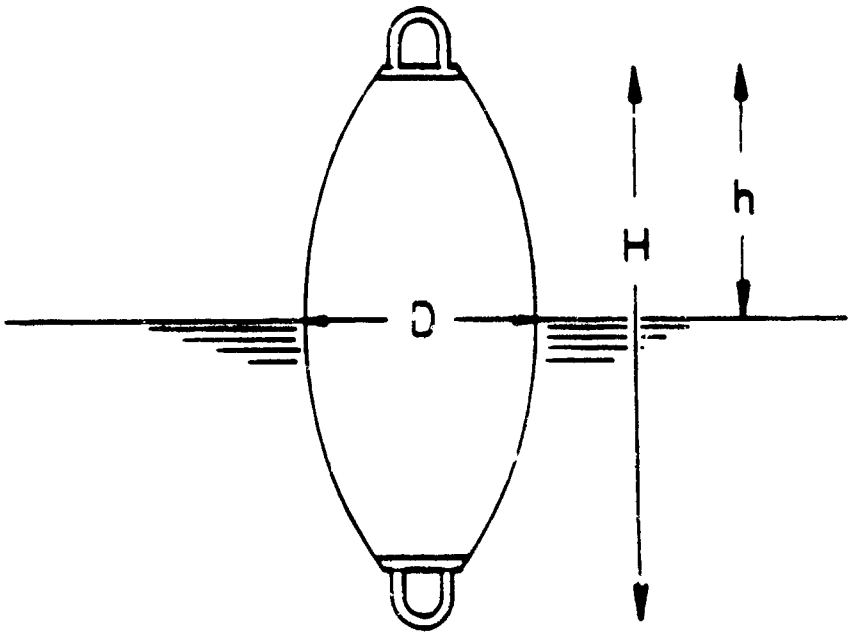
D
H
h

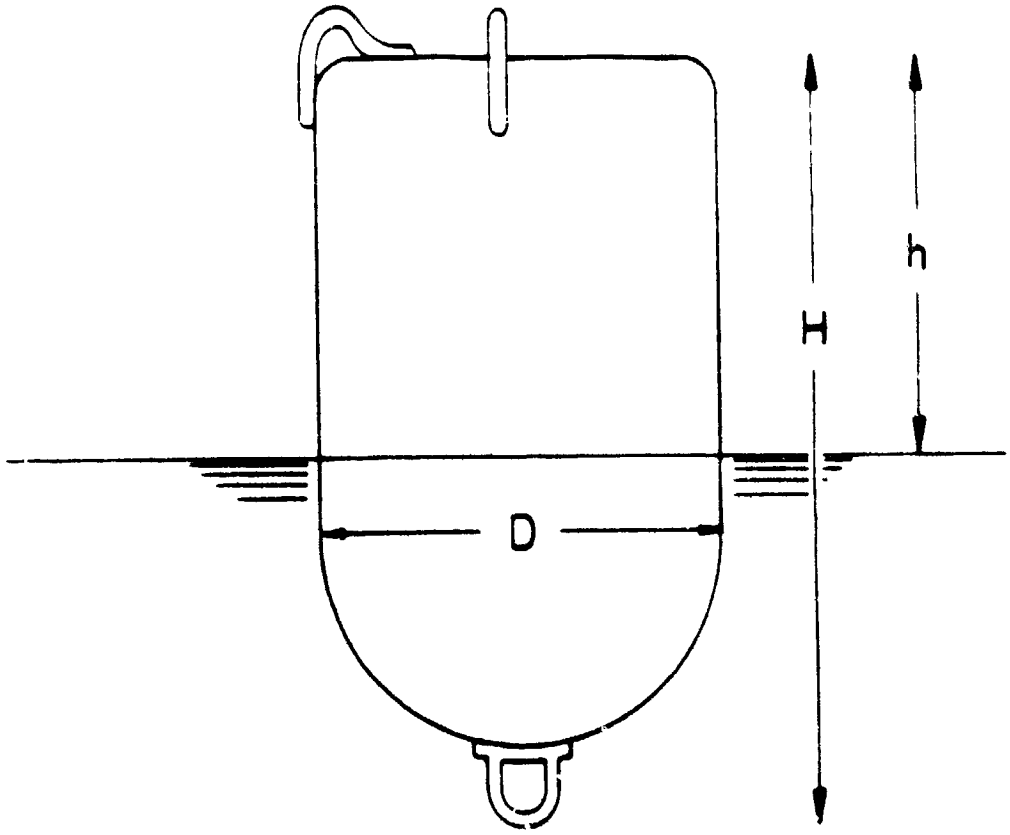
h
H
D

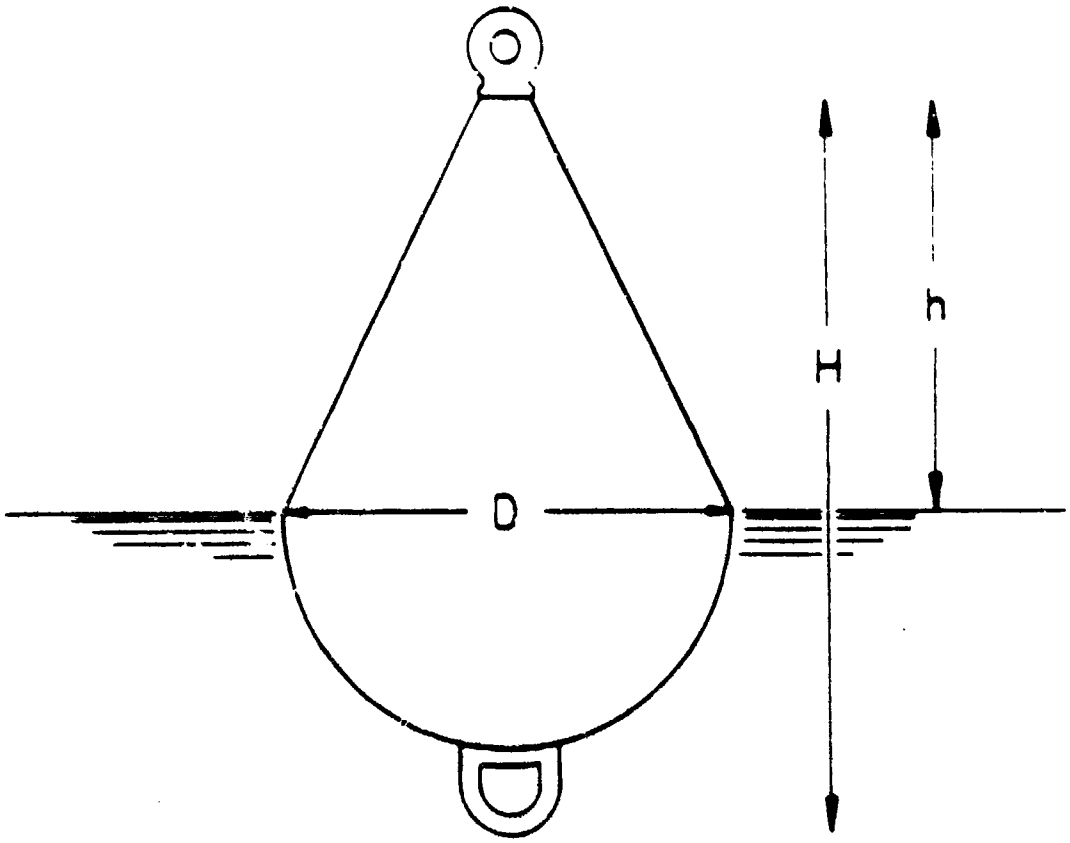
H
h
D

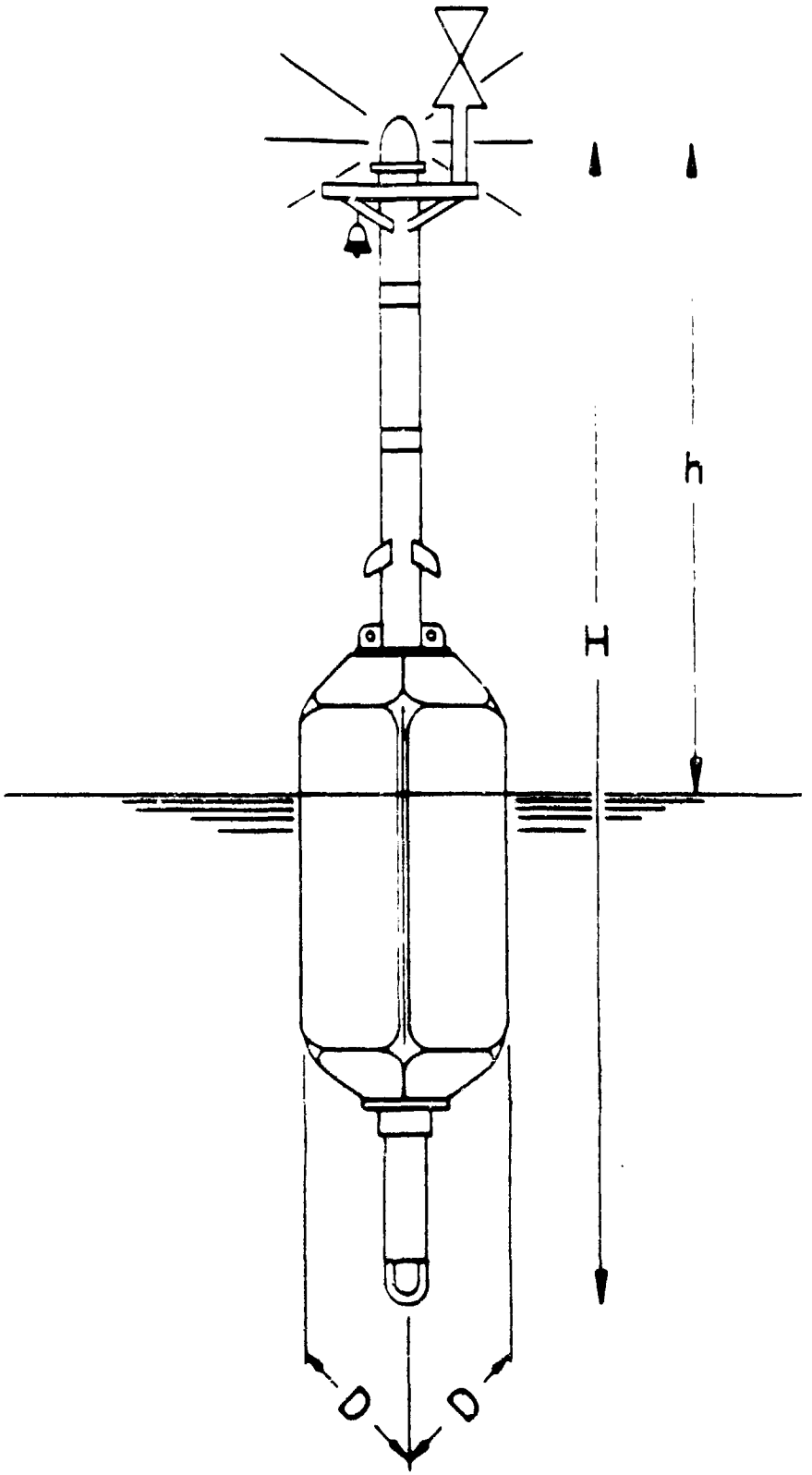

C-225

NORMAY MFG. - 1-10

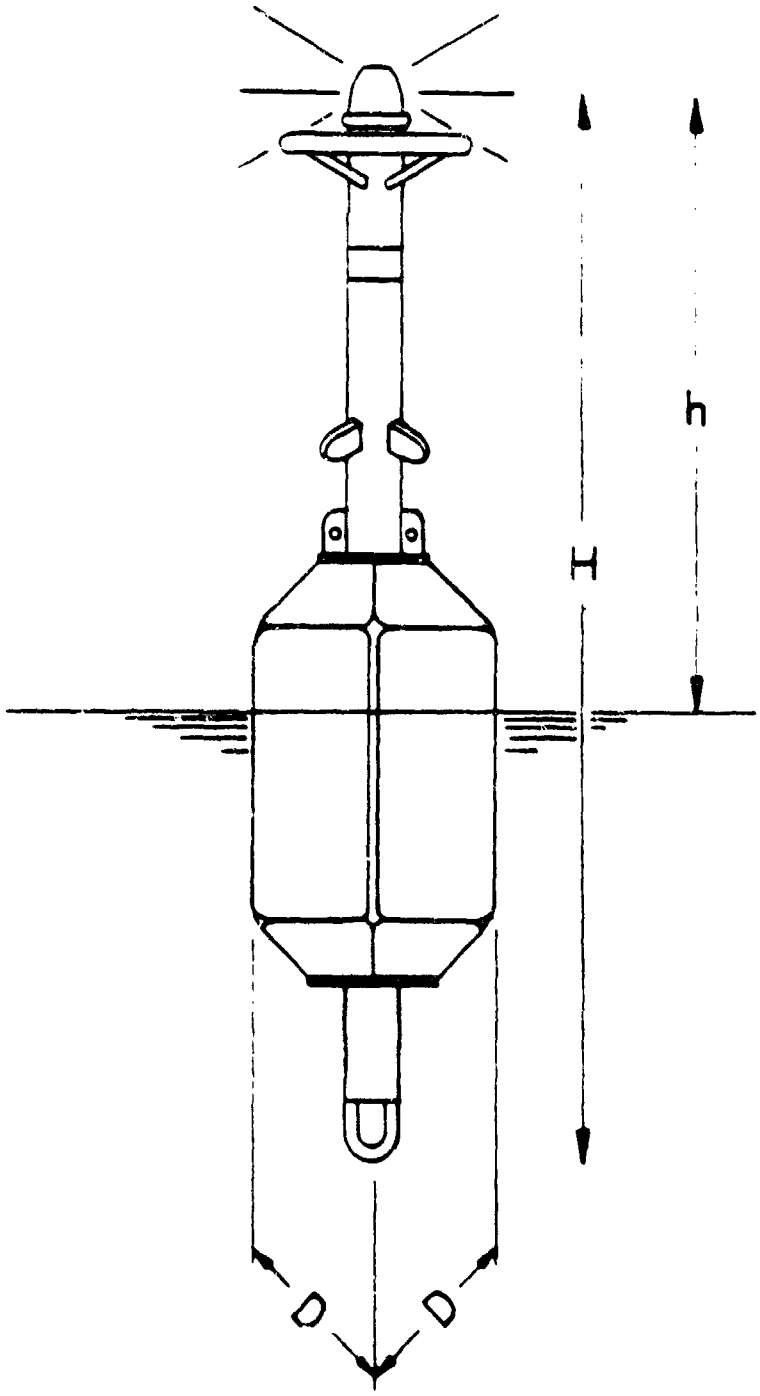

C-226

THIS PAGE INTENTIONALLY LEFT BLANK

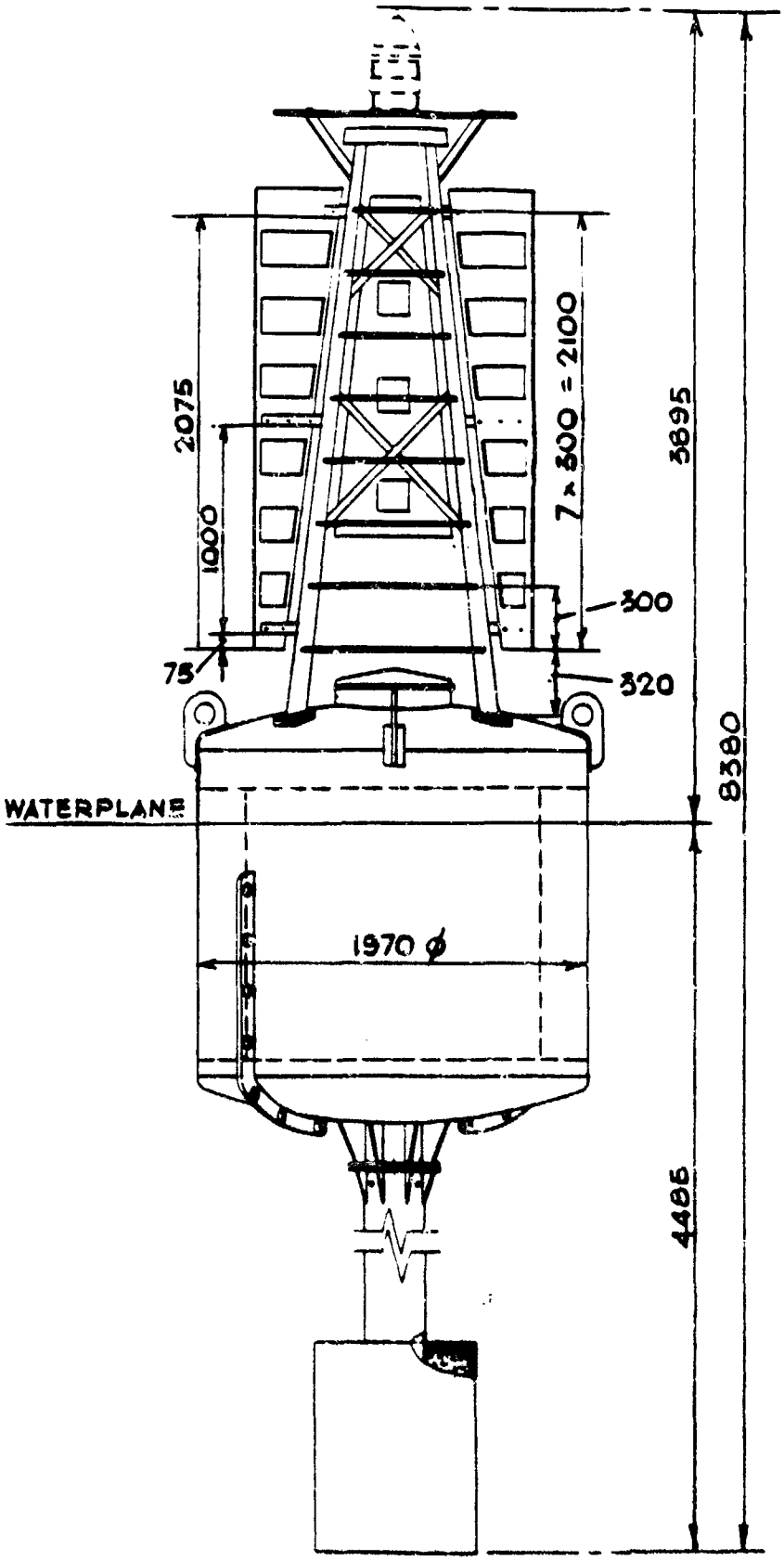
2075
1000
75
7 x 300 = 2100
300
320
3895
8380
WATERPLANE
1970 ϕ
4485

S. AFRICA -1

THIS PAGE INTENTIONALLY LEFT BLANK

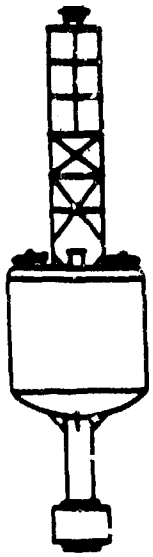

1962 TYPE
STANDARD

Function. The 9X32 LR buoy is designed and constructed for the most exposed locations. This buoy configuration is used when a sound signal is not required.

Physical Characteristics

Buoy weight	17,443 lb
Buoy draft (no mooring)	11 ft-9 in.
Focal height of light (no mooring)	20 ft-2 in.
Freeboard (no mooring)	4 ft-5 in.
Minimum freeboard	1 ft-4 in.
Pounds per inch of immersion	340

Related Equipment

Power units (maximum number and size)	2-B30
Bridle size (chain diameter and length)	1¼ in.X18 ft
Mooring chain size	1¼ in.
Sinker size	12,750 lb

Operational Characteristics

Nominal visual range of daymark	3.8 nmi
Radar range	4.5 nmi
Maximum current	5 kn
Visual range of light	(see Chapter 6)

Operational Characteristics (cont'd)

Minimum mooring depth	30 ft
Maximum mooring depth (B10)	345 ft
(B30)	325 ft

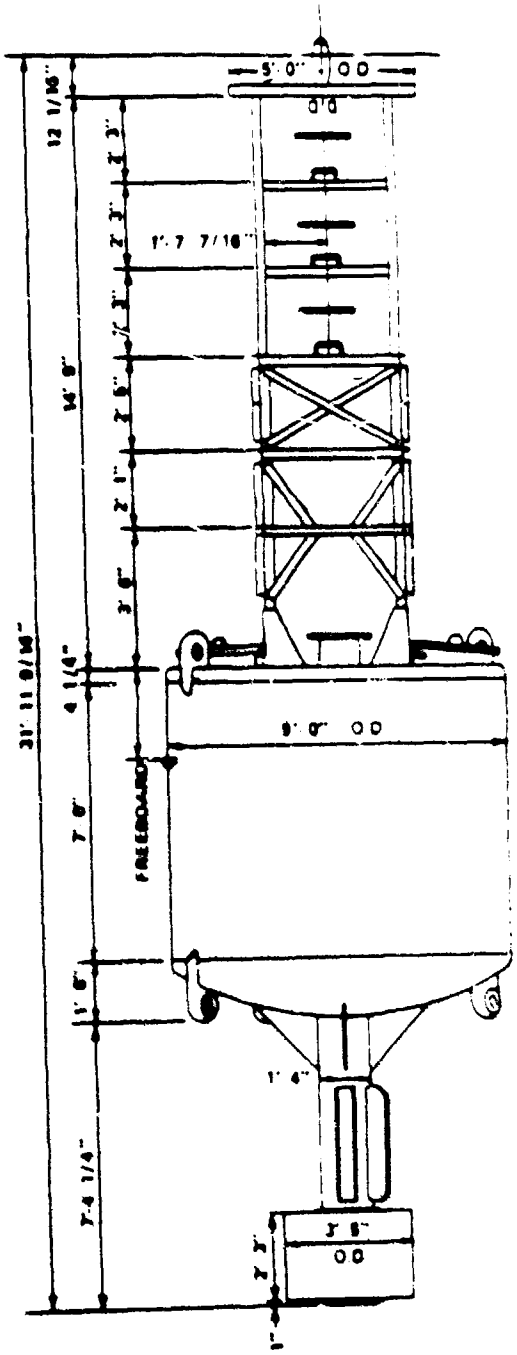

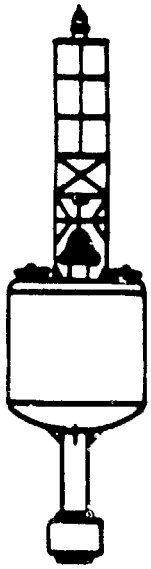

1962 TYPE STANDARD

Function. The 9X32 LBR buoy is designed and constructed for the most exposed locations. This buoy configuration is used with a 1000-lb bell, wave-actuated sound signal. The basic buoy is the same as the 9X32 LR.

Physical Characteristics

Buoy weight	19,091 lb
Buoy draft (no mooring)	12 ft-2 in.
Focal height of light (no mooring)	19 ft-9 in.
Freeboard (no mooring)	4 ft-0 in.
Minimum freeboard	1 ft-4 in.
Pounds per inch of immersion	340

Related Equipment

Power units (maximum number and size)	2-330
Sound equipment	1000-lb bell
Bridle size (chain diameter and length)	1¼ in.X18 ft
Mooring chain size	1¼ in.
Sinker size	12,750 lb

Operational Characteristics

Nominal visual range of daymark	3.8 nmi
Radar range	4.5 nmi

Operational Characteristics (cont'd)

Maximum current	5
Visual range of light	(see Chapte
Minimum mooring depth	
Maximum mooring depth (B10A)	
(B30A)	

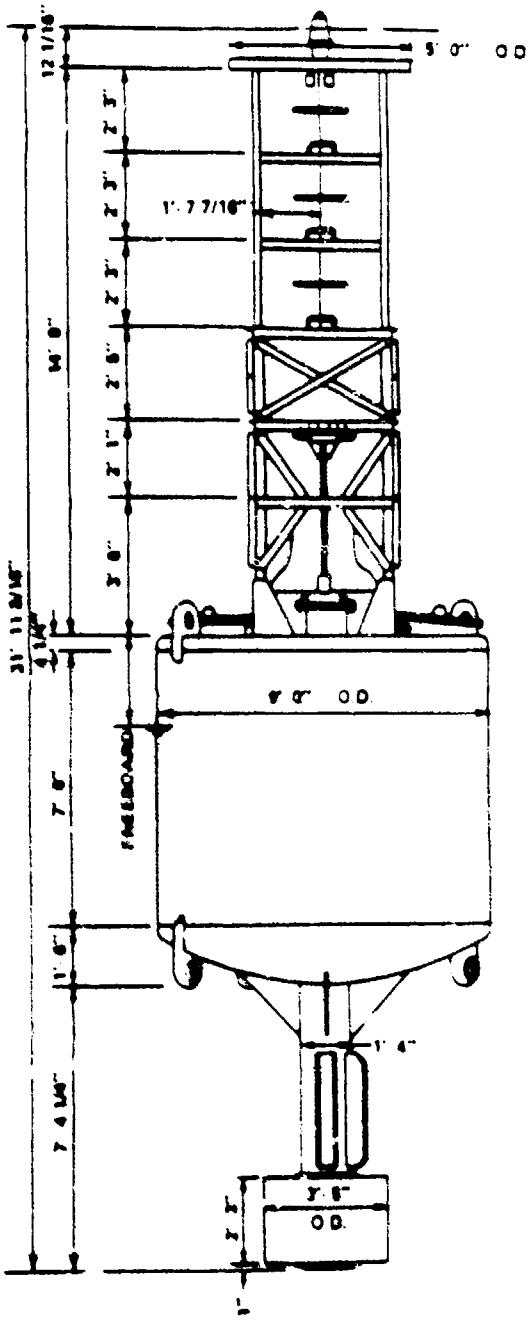

9X32 LGR

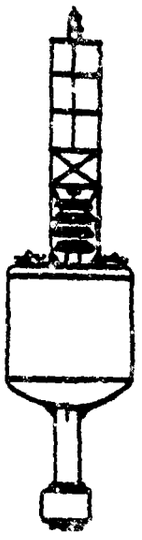

1962 TYPE
STANDARD

Function. The 9X32 LGR buoy is designed and constructed for the most exposed locations. This buoy configuration is used with a 36-in. diameter, four-gong, wave-actuated sound signal. The basic buoy is the same as the 9X32 LR.

Physical Characteristics

Buoy weight	19,391 lb
Buoy draft (no mooring)	12 ft-3 in.
Focal height of light (no mooring)	19 ft-8 in.
Freeboard (no mooring)	3 ft-11 in.
Minimum freeboard	1 ft-4 in.
Pounds per inch of immersion	340

Related Equipment

Power units (maximum number and size)	2-B30
Sound equipment	4 36-in. gongs
Bridle size (chain diameter and length)	1½ in.X18 ft
Mooring chain size	1½ in.
Sinker size	12,750 lb

Operational Characteristics

Nominal visual range of daymark	3.8 nmi

Operational Characteristics (cont'd)

Radar range	4.5 nmi
Maximum current	5
Visual range of light	(see Chapter
Minimum mooring depth	30
Maximum mooring depth (B10A)	285
(B30A)	265 f

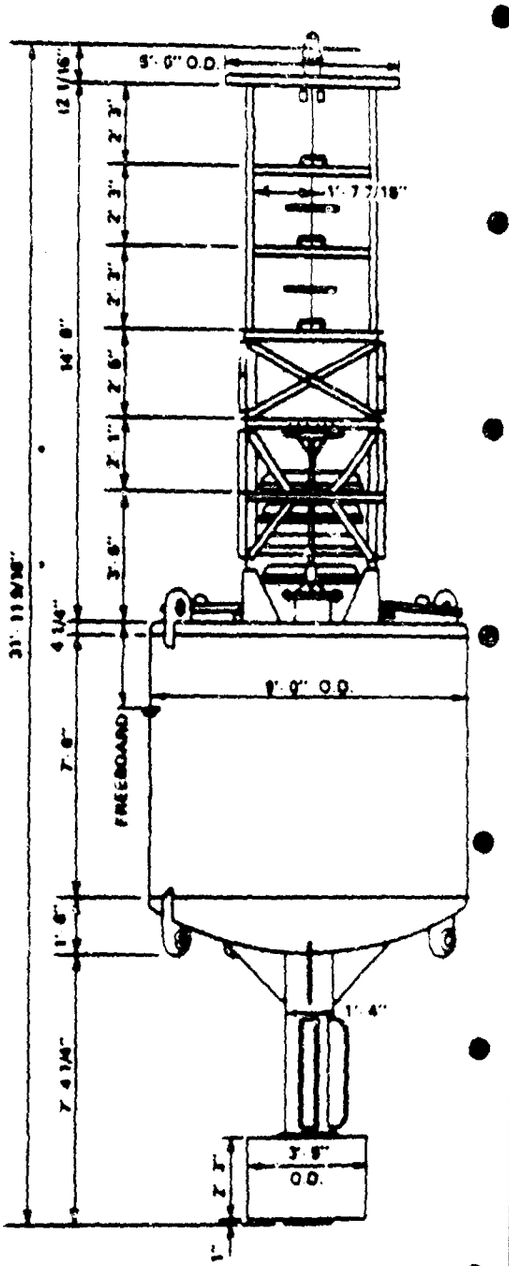

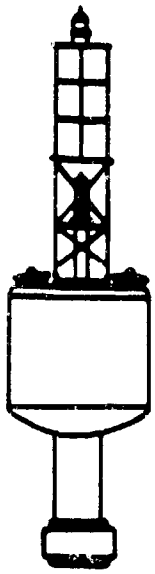

1962 TYPE STANDARD

Function. The 9X32 LWR buoy is designed and constructed for the most exposed locations. This buoy configuration is used with a four-ball whistle and whistle valve for the wave-actuated sound signal. The buoy body differs from the 9X32 LR in that it has an open tube running through it to activate the whistle.

Physical Characteristics

Buoy weight	18,616 lb
Buoy draft (no mooring)	12 ft-11 in.
Focal height of light (no mooring)	19 ft-0 in.
Freeboard (no mooring)	3 ft-3 in.
Minimum freeboard	1 ft-4 in.
Pounds per inch of immersion	300

Related Equipment

Power units (maximum number and size)	2-830
Sound equipment	4-ball whistle
Bridle size (chain diameter and length)	1¼ in.X18 ft
Mooring chain size	1¼ in.
Sinker size	12,750 lb

Operational Characteristics

Nominal visual range of daymark	3.3 nmi

Operational Characteristics (cont'd)

Radar range	4 5 nm
Maximum current	5
Visual range of light	(see Chapter
Minimum mooring depth	
Maximum mooring depth (B10A)	1
(B30A)	15

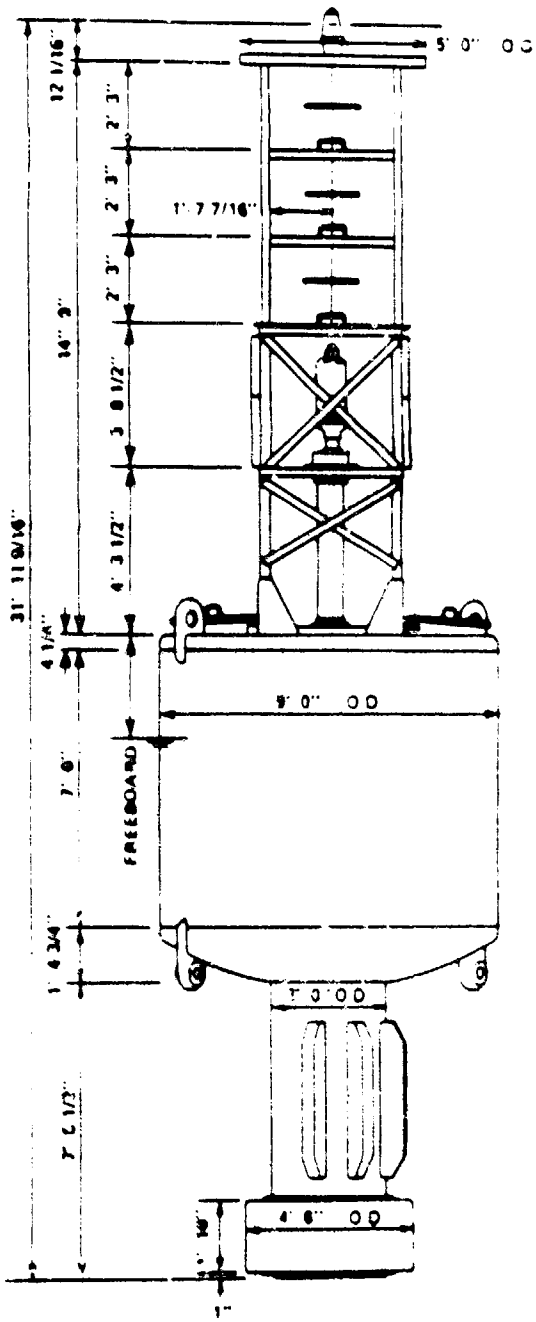

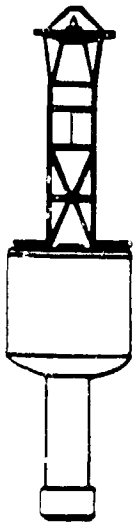

1983 TYPE STANDARD

Function. The 9x35 LR buoy is designed and constructed for use in the most exposed locations. This buoy is used with an electronic horn. It may be equipped with main and passing lights, a racon, and a wave-activated generator. A weather sensing package may also be installed.

Physical Characteristics.

Buoy weight	17,700 lb
Buoy draft (no mooring)	15 ft-10 in
Focal height of main light (no mooring)	18 ft-9 in
Freeboard (no mooring)	3 ft-0 in
Minimum freeboard	1 ft-3 in
Pounds per inch immersion	300

Related Equipment.

Power units (maximum number and size)	2-B30
Sound equipment	SA850/1
Bridle size (in x ft)	1-1/2x18
Mooring chain size	1-1/2 in
Sinker size	12,750 lb

Operational Characteristics.

Nominal visual range of daymark	3.8 nmi
Radar range	2.5 nmi
Minimum mooring depth	35 ft
Maximum mooring depth	190 ft

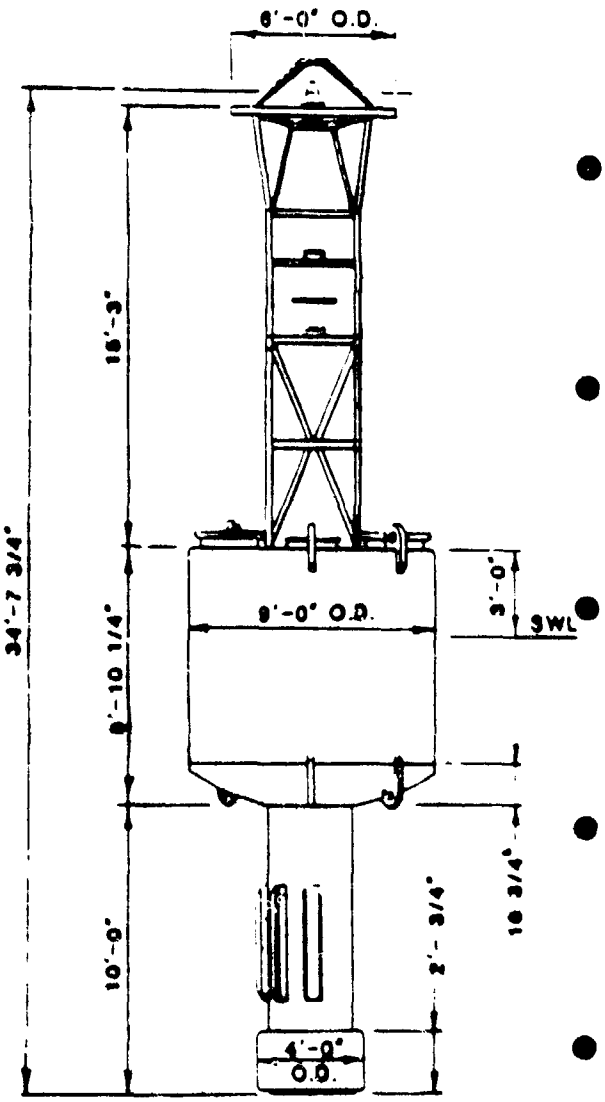

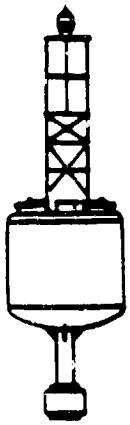

1962 TYPE STANDARD

Function. The 8X26 LR buoy is designed and constructed for exposed or semiexposed locations. This buoy configuration is used when a sound signal is not required.

Physical Characteristics

Buoy weight	11,382 lb
Buoy draft (no mooring)	10 ft-1 in.
Focal height of light (no mooring)	15 ft-10 in.
Freeboard (no mooring)	3 ft-3 in.
Minimum freeboard	1 ft-3 in.
Pounds per inch of immersion	270

Related Equipment

Power units (maximum number and size)	2-830
Bridle size (chain diameter and length)	1¼ in.x15 ft
Mooring chain size	1¼ in.
Sinker size	8,500 lb

Operational Characteristics

Nominal visual range of daymark	3.2 nmi
Radar range	3.7 nmi
Maximum current	4 kn
Visual range of light	(see Chapter 6)

Operational Characteristics (cont'd)

Minimum mooring depth		25 ft
Maximum mooring depth	(810)	240 ft
	(830)	210 ft

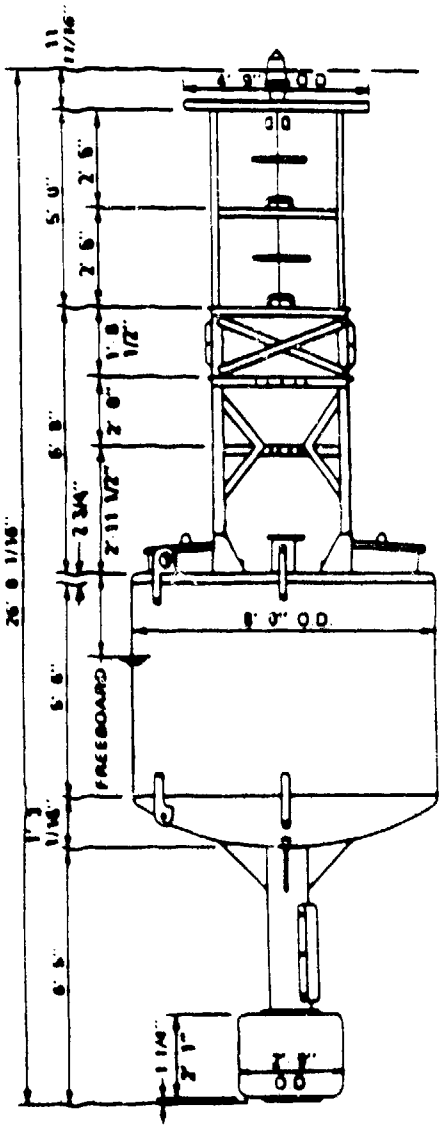

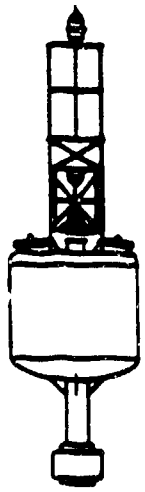

1962 TYPE STANDARD

Function. The 8X26 LBR buoy is designed and constructed for exposed or semiexposed locations. This buoy configuration is used with a 225-lb bell, wave-actuated sound signal. The basic buoy is the same as the 8X26 LR.

Physical Characteristics

Buoy weight	11,917 lb
Buoy draft (no mooring)	10 ft-3 in.
Focal height of light (no mooring)	15 ft-8 in.
Freeboard (no mooring)	3 ft-1 in.
Minimum freeboard	1 ft-3 in.
Pounds per inch of immersion	270

Related Equipment

Power units (maximum number and size)	2-830
Sound equipment	225-lb bell
Bridle size (chain diameter and length)	1¼ in.X15 ft
Mooring chain size	1¼ in.
Sinker size	8,500 lb

Operational Characteristics

Nominal visual range of daymark	3.2 nmi
Radar range	3.7 nmi

Operational Characteristics (cont'd)

Maximum current		4 kn
Visual range of light		(see Chapter 6)
Minimum mooring depth		25 ft
Maximum mooring depth	(B10)	220 ft
	(B30)	190 ft

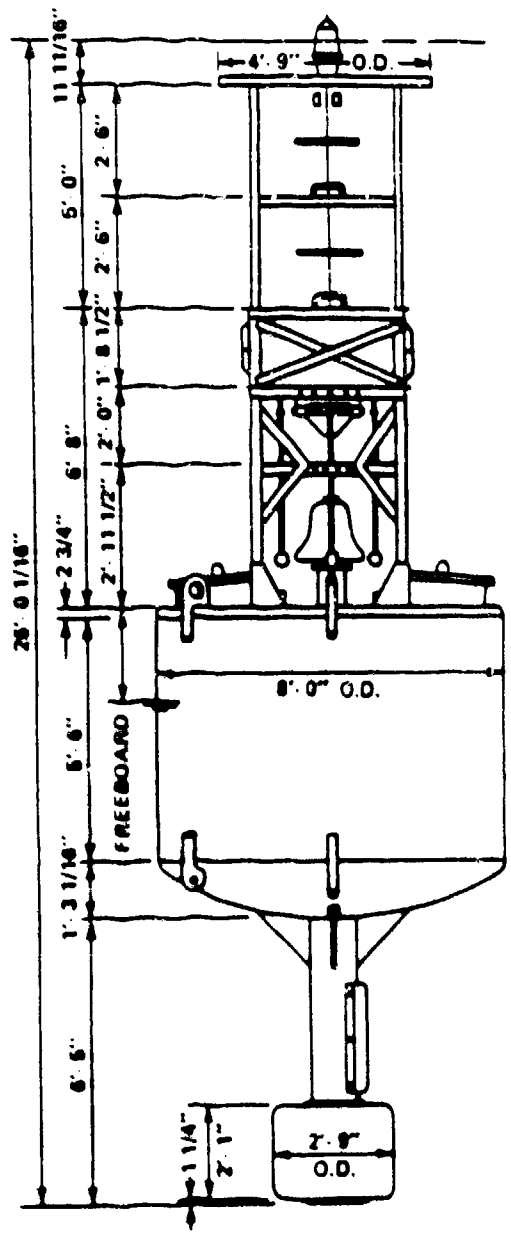

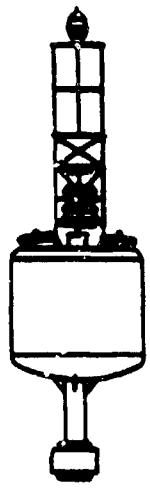

1962 TYPE STANDARD

Function. The 8X26 LGR buoy is designed and constructed for exposed or semiexposed locations. This buoy configuration is used with a 20-in. diameter, three-gong, wave-actuated sound signal. The basic buoy is the same as the 8X26 LR.

Physical Characteristics

Buoy weight	11,853 lb
Buoy draft (no mooring)	10 ft-3 in.
Focal height of light (no mooring)	15 ft-8 in.
Freeboard (no mooring)	3 ft-1 in.
Minimum freeboard	1 ft-3 in.
Pounds per inch of immersion	270

Related Equipment

Power units (maximum number and size)	2-B30
Sound equipment	3 20-in. gongs
Bridle size (chain diameter and length)	1¼ in.X15 ft
Mooring chain size	1¼ in.
Sinker size	8,500 lb

Operational Characteristics

Nominal visual range of daymark	3.2 nmi
Radar range	3.7 nmi

Operational Characteristics (cont'd)

Maximum current	4 kn
Visual range of light	(see Chapter 6)
Minimum mooring depth	25 ft
Maximum mooring depth (B10)	220 ft
(B30)	190 ft

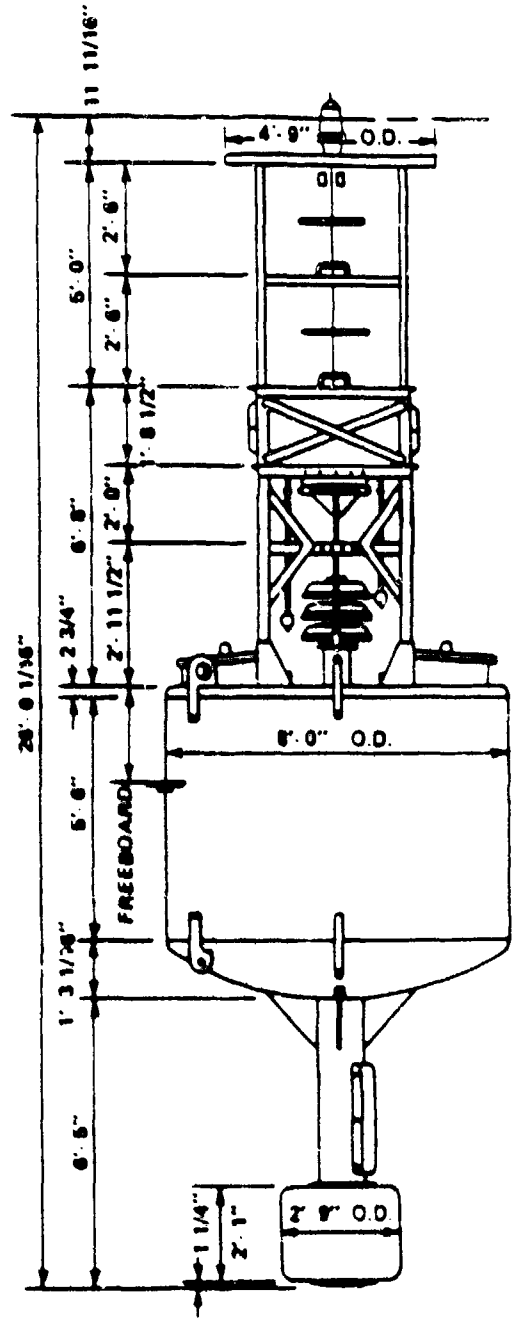

1962 TYPE STANDARD

Function. The 8X26 LWR buoy is designed and constructed for exposed or semiexposed locations. This buoy configuration is used with a four-ball whistle and whistle valve for the wave-actuated sound signal. The buoy body differs from the 8X26 LR in that it has an open tube running through it to activate the whistle.

Physical Characteristics

Buoy weight	12,131 lb
Buoy draft (no mooring)	10 ft-9 in.
Focal height of light (no mooring)	15 ft-2 in.
Freeboard (no mooring)	2 ft-2 in.
Minimum freeboard	1 ft-3 in.
Pounds per inch of immersion	250

Related Equipment

Power units (maximum number and size)	2-830
Sound equipment	4-ball whistle
Bridle size (chain diameter and length)	1¼ in.X15 ft
Mooring chain size	1¼ in.
Sinker size	8,500 lb

Operational Characteristics

Nominal visual range of daymark	3.2 nmi

Operational Characteristics (cont'd)

Radar range	3.7 nmi
Maximum current	4 kn
Visual range of light	(see Chapter 6)
Minimum mooring depth	25 ft
Maximum mooring depth (B10)	120 ft
(B30)	90 ft

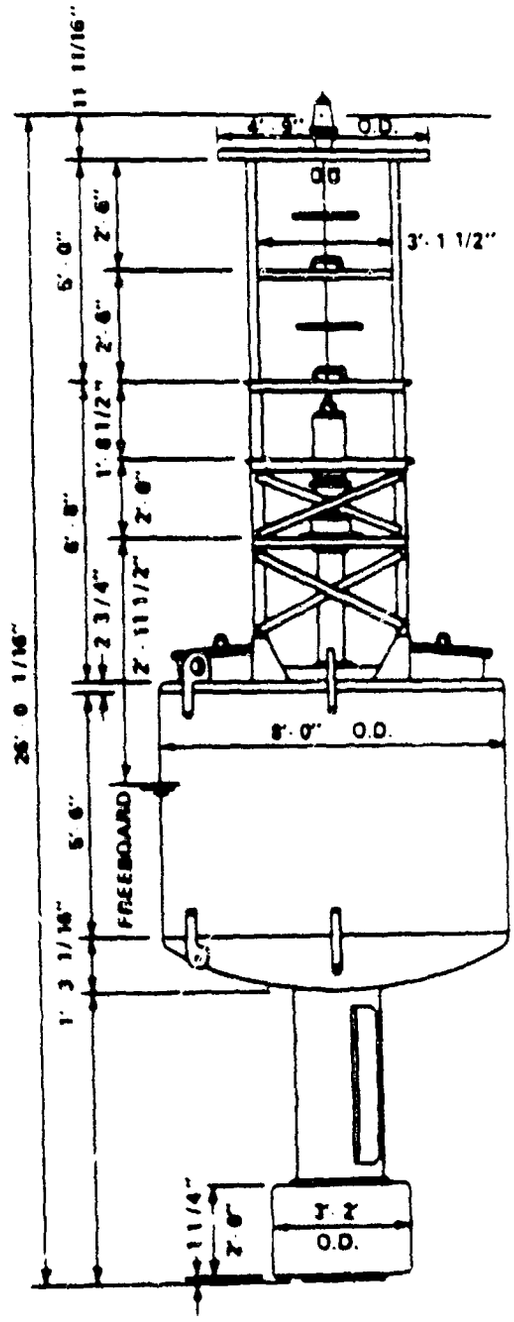

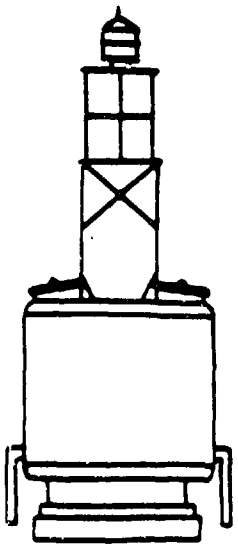

1962 TYPE
STANDARD

Function. The 7X17 LR buoy is designed and constructed for semiexposed locations. **This buoy can be modifind to install an 85 lb. bell.** The 7X17 LR is very effective in shallow water areas due to its flat bottom.

Physical Characteristics

Buoy weight	7,810 lb
Buoy draft (no mooring)	5 ft-6 in.
Focal height of light (no mooring)	11 ft-8 in.
Freeboard (no mooring)	3 ft-0 in.
Minimum freeboard	12 in.
Pounds per inch of immersion	205

Related Equipment

Power units (maximum number and size)	2-830
Bridle size (chain diameter and length)	1¼ in.X15 ft
Mooring chain size	1 1/8 in.
Sinker size	6,500 lb

Operational Characteristics

Nominal visual range of daymark	2.3 nmi
Radar range	2.7 nmi
Maximum current	4 kn

Operational Characteristics (cont'd)

Visual range of light	(see Chapter 6)
Minimum mooring depth	15 ft
Maximum mooring depth (810)	220 ft
(830)	185 ft

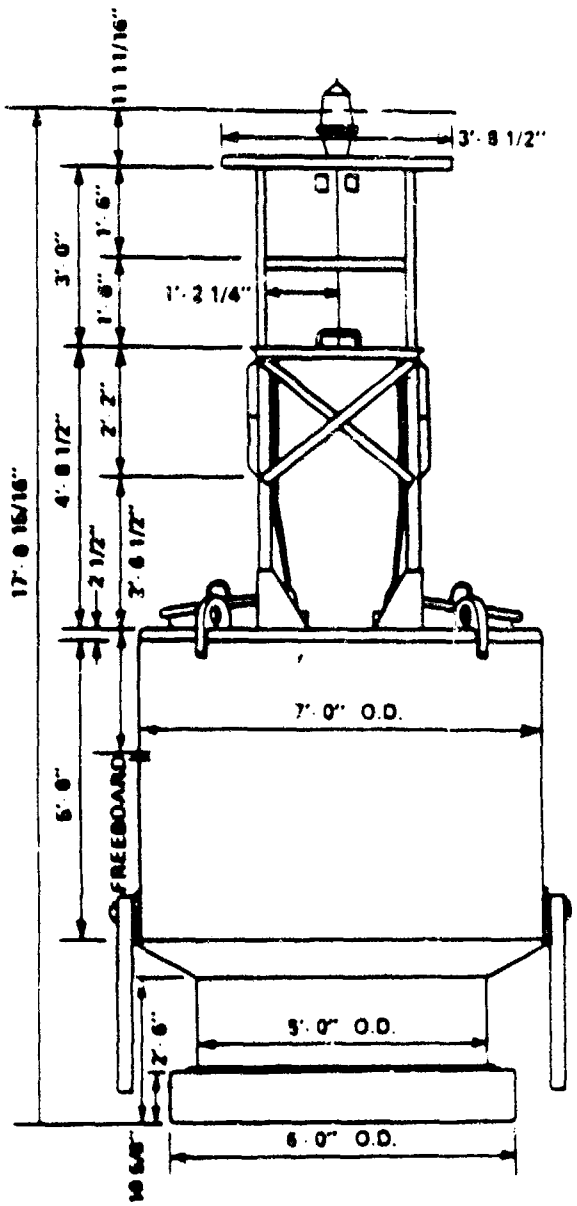

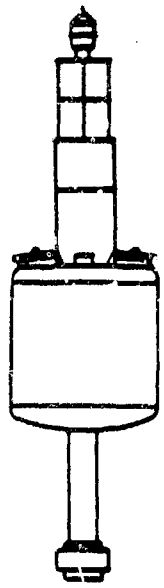

1962-TYPE
STANDARD

Function. The 6X20 LR buoy is designed and constructed for semiexposed or protected locations. This buoy configuration is used when a sound signal is not required.

Physical Characteristics

Buoy weight	6,023 lb
Buoy draft (no mooring)	8 ft-8 in.
Focal height of light (no mooring)	10 ft-10 in.
Freeboard (no mooring)	2 ft-5 in.
Minimum freeboard	12 in.
Pounds per inch of immersion	150

Related Equipment

Power units (maximum number and size)	2-630
Bridle size (chain diameter and length)	1 in.X12 ft
Mooring chain size	1 1/8 in.
Sinker size	5,000 lb

Operational Characteristics

Nominal visual range of daymark	2.1 nmi
Radar range	2.4 nmi
Maximum current	4 kn

Operational Characteristics (cont'd)

Minimum mooring depth	20 ft
Maximum mooring depth (810)	110 ft
(830)	85 ft

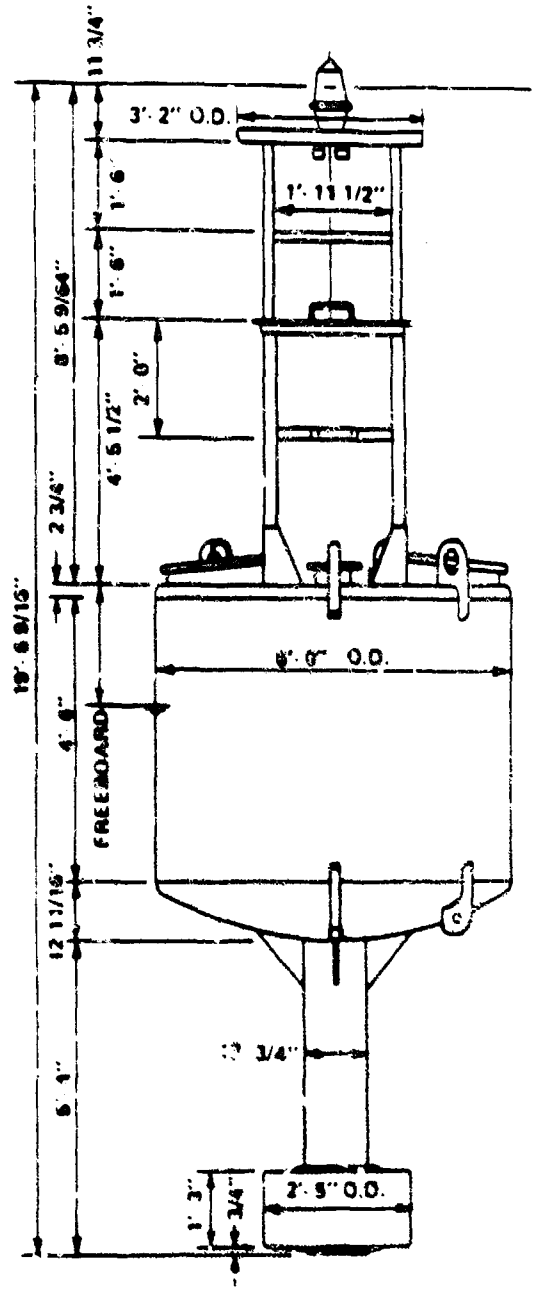

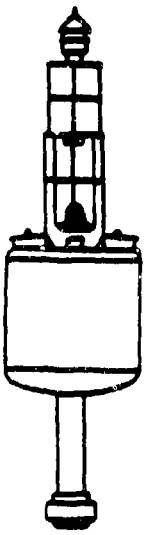

1962 TYPE
STANDARD

Function. The 6X20 LBR buoy is designed and constructed for semiexposed or protected locations. This buoy configuration is used with an 85-lb bell, wave-actuated sound signal. The basic buoy is the same as the 6X20 LR.

Physical Characteristics

Buoy weight	6,270 lb
Buoy draft (no mooring)	8 ft-10 in.
Focal height of light (no mooring)	10 ft-8 in.
Freeboard (no mooring)	2 ft-3 in.
Minimum freeboard	12 in.
Pounds per inch of immersion	150

Related Equipment

Power units (maximum number and size)	2-B30
Sound equipment	85-lb bell
Bridle size (chain diameter and length)	1 in.X12 ft
Mooring chain size	1 1/8 in.
Sinker size	5,000 lb

Operational Characteristics

Nominal visual range of daymark	2.1 nmi
Radar range	2.4 nmi

Operational Characteristics (cont'd)

Maximum current	4 kn
Visual range of light	(see Chapter 6)
Minimum mooring depth	20 ft
Maximum mooring depth (B10)	95 ft
(B30)	90 ft

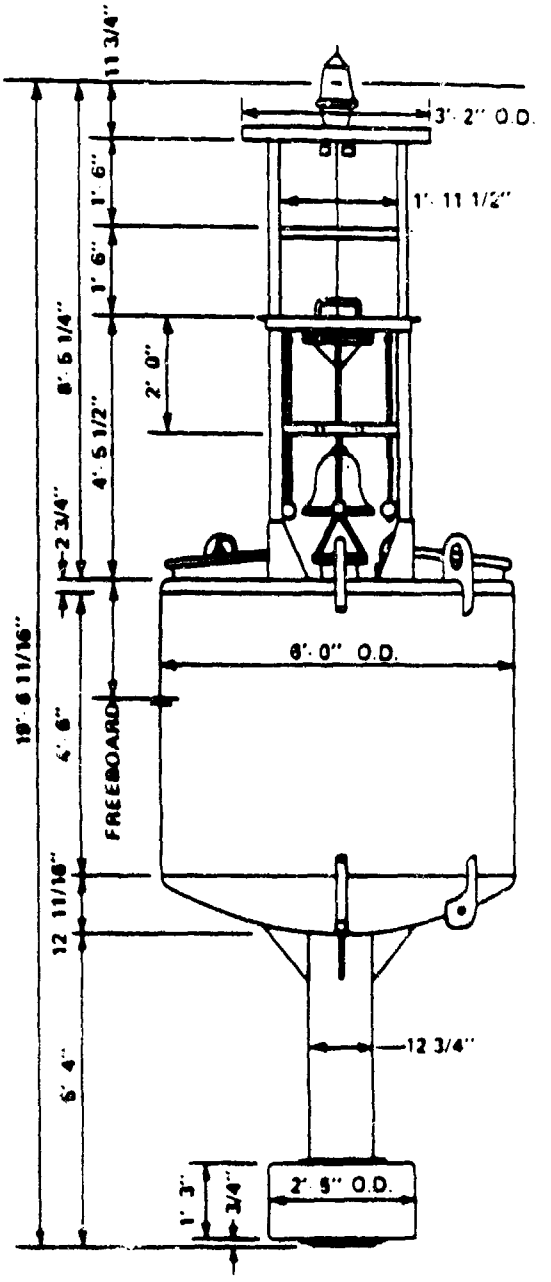

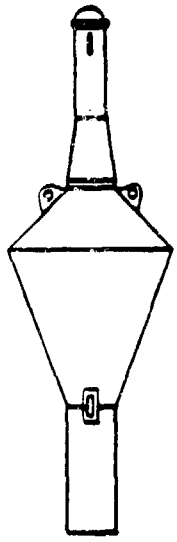

1962 TYPE
STANDARD

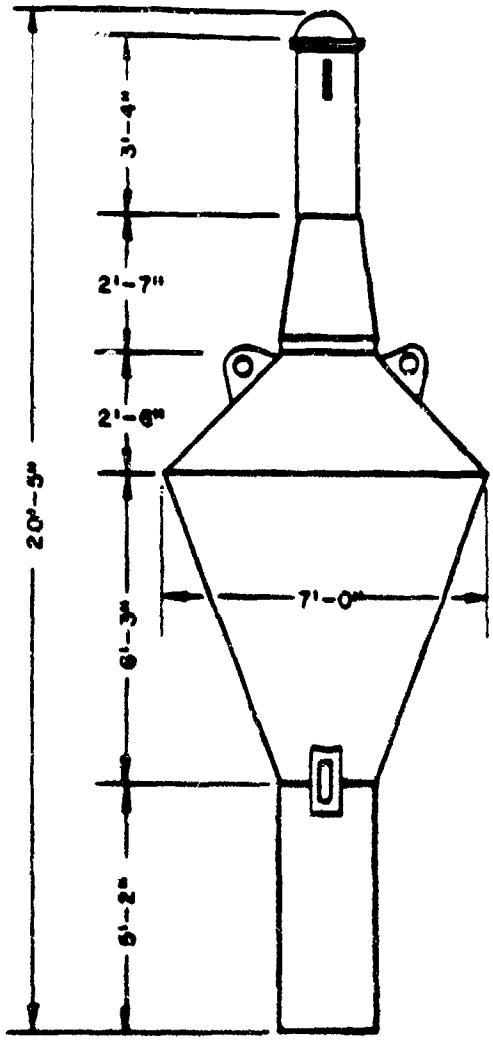

Function. The 7X20 LI buoy is designed and constructed for use as a seasonal aid on stations subjected to ice conditions.

Physical Characteristics.

Buoy weight	6,010 lb
Buoy draft (no mooring)	10 ft-4 in
Focal height of light (no mooring)	9 ft-10 in
Freeboard (no mooring)	3 ft-7 in
Minimum freeboard	3 ft-0 in
Pounds per inch immersion	170

Related Equipment.

Power unit	ice buoy dry cell
Mooring chain size	Retain mooring of permanent aid and add 3/4 in chain riser
Sinker	
Optic	Hemispherical Lexan dome with optional modified 155 mm lens

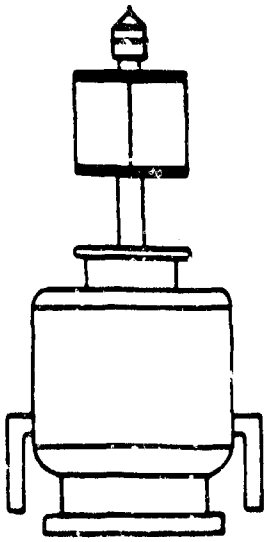

1966 TYPE
STANDARD

Function. The 5X11 LR buoy is designed and constructed for protected locations. This buoy configuration cannot have a sound signal installed.

Physical Characteristics

Buoy weight	3,004 lb
Buoy draft (no mooring)	4 ft-1 in.
Focal height of light (no mooring)	7 ft-5 in.
Freeboard (no mooring)	2 ft-2 in.
Minimum freeboard	9 in.
Pounds per inch of immersion	105

Related Equipment

Power units (maximum number and size)	1-B10
Bridle size (chain diameter and length)	1 in.X12 ft
Mooring chain size	3/4 in.
Sinker size	4,000 lb

Operational Characteristics

Nominal visual range of daymark	1.4 nmi
Radar range	1.7 nmi
Maximum current	3 kn

Operational Characteristics (cont'd)

Minimum mooring depth	10 ft
Maximum mooring depth (B10)	160 ft

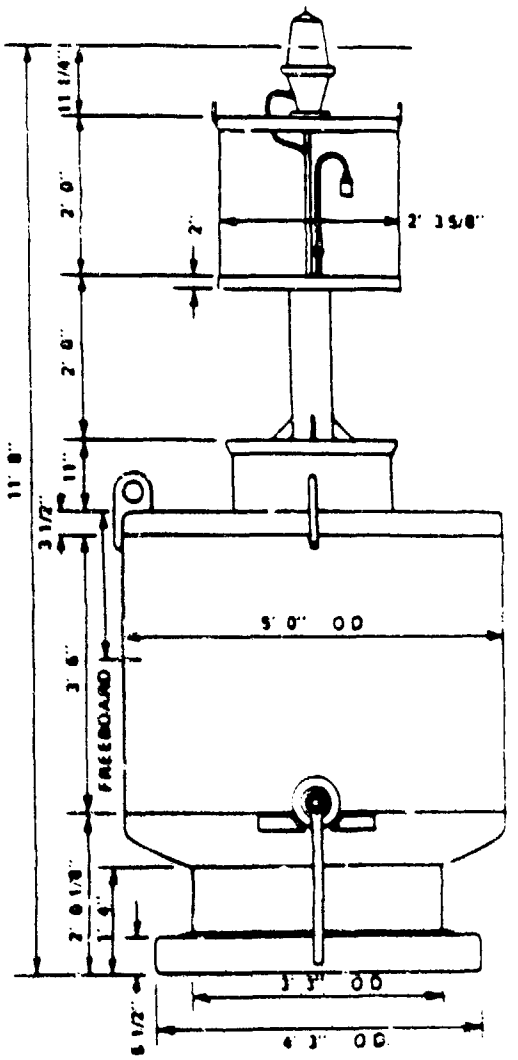

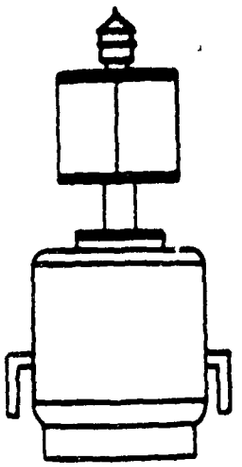

1965 TYPE STANDARD

Function. The 3½X8 LR buoy is designed and constructed for protected locations. This buoy configuration cannot have a sound signal installed.

Physical Characteristics

Buoy weight	1,487 lb
Buoy draft (no mooring)	2 ft-9 in.
Focal height of light (no mooring)	5 ft-6 in.
Freeboard (no mooring)	1 ft-4 in.
Minimum freeboard	6 in.
Pounds per inch of immersion	50

Related Equipment

Power units (maximum number and size)	1-810
Bridle size (chain diameter and length)	7/8 in. X10 ft
Mooring chain size	3/4 in.
Sinker size	3,000 lb

Operational Characteristics

Nominal visual range of daymark	1.4 nmi
Radar range	1.3 nmi
Maximum current	3 kn

Operational Characteristics (cont'd)

Minimum mooring depth	10 ft
Maximum mooring depth (810)	30 ft

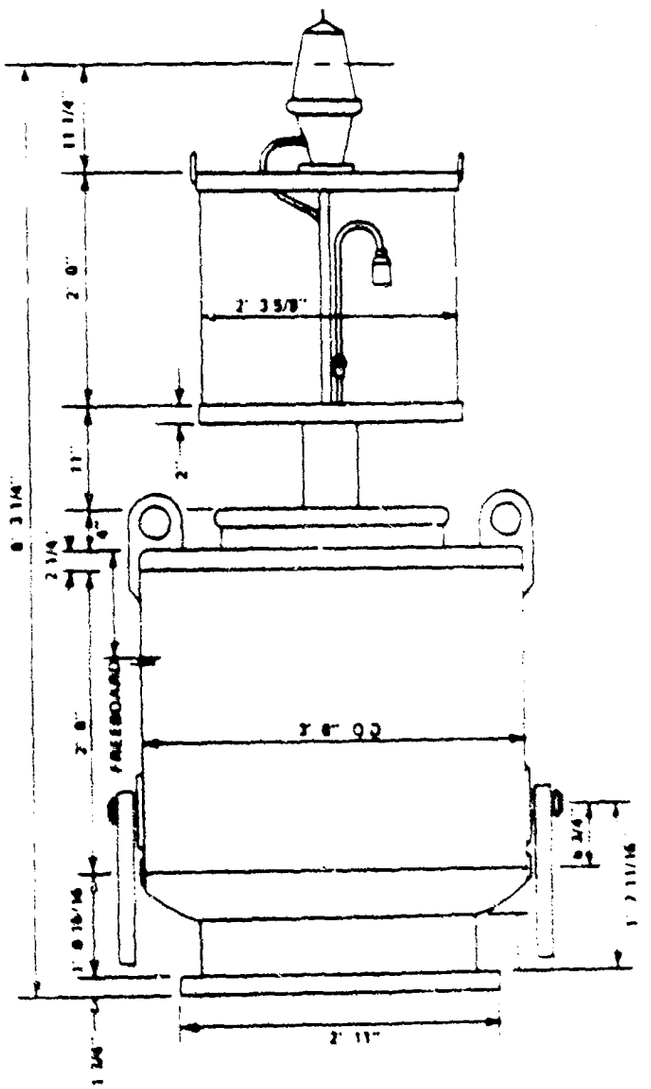

DISCREPANCY BUOY

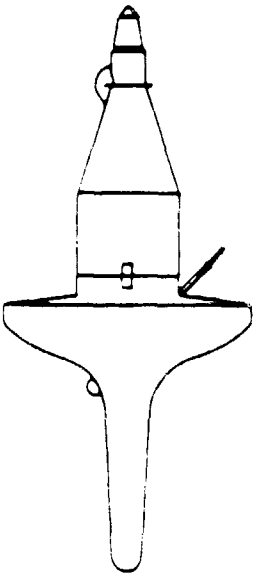

Ordering Data. Order from SICP using the following NSK's:

Can daymark	2050 01 222 3938
Nun daymark	2050 01 224 6042
Hull assembly	2050 01 F78 0153
Radar reflector	2050 01 F78 0154

Discrepancy buoy batteries may be ordered from SUPCEN Brooklyn under NSN 6135 01 117 7658.

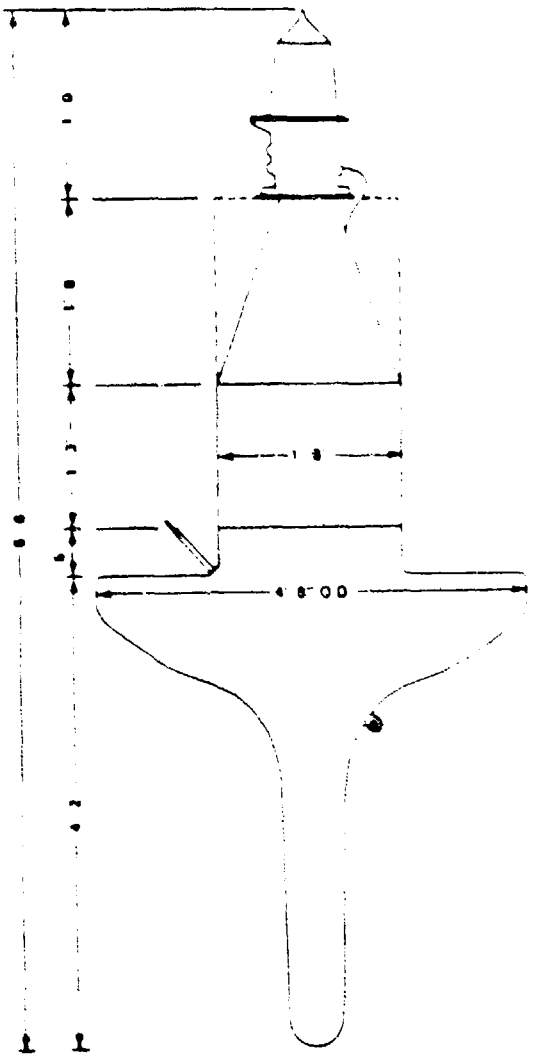

Function. The discrepancy buoy is designed to temporarily replace damaged or missing buoys or structures until the discrepancy can be corrected.

Physical Characteristics.

Buoy weight	220 lb
Buoy draft (no mooring)	4 ft
Focal height of light (no mooring)	4 ft-6 in

Related Equipment.

Power units	"hot-shot" or discrepancy buoy battery
Mooring chain size	1/2 in
Sinker size	150-250 lb

Operational Characteristics.

Nominal visual range of daymark	1 nmi
Radar range	1 nmi
Maximum current	5 kts
Visual range of light	(see Chap. 6)
Minimum mooring depth	5 ft
Maximum mooring depth	100 ft

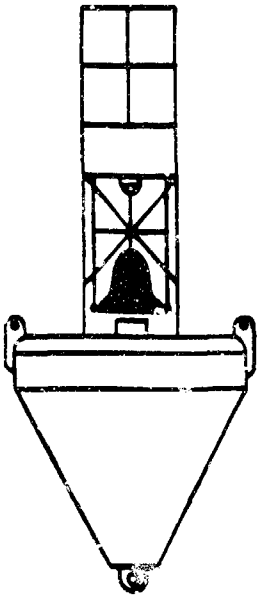

1962 TYPE
STANDARD

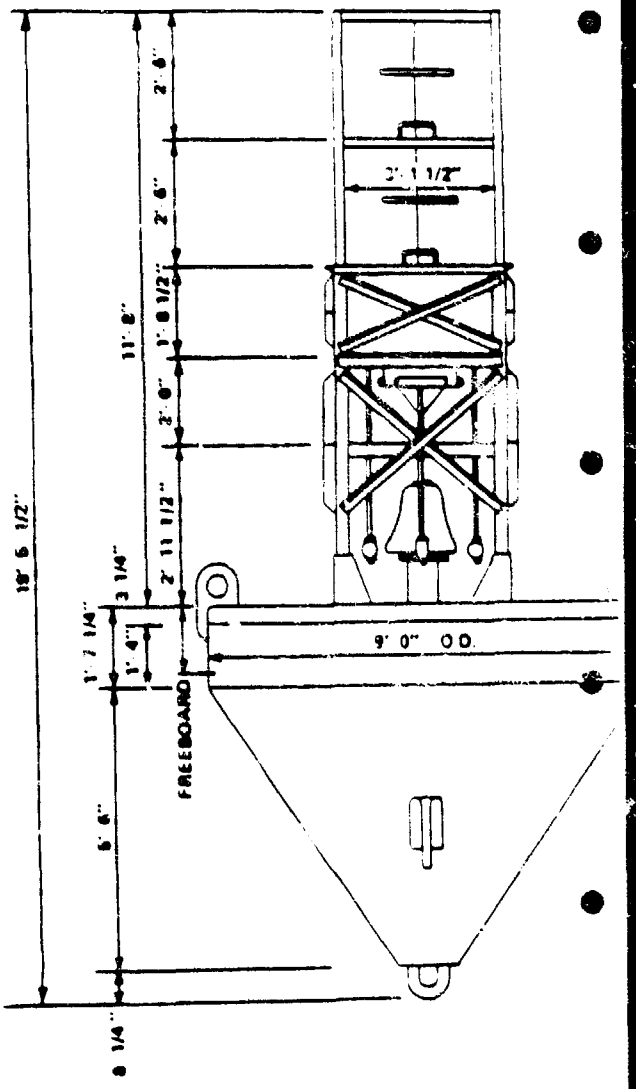

Function. The 9X20 BR buoy is designed and constructed for exposed locations where a lighted buoy is not necessary. This buoy configuration is used with a 225-lb bell, wave-actuated sound signal.

Physical Characteristics

Buoy weight	8,110 lb
Buoy draft (no mooring)	5 ft-5 in.
Freeboard (no mooring)	2 ft-0 in.
Minimum freeboard	9 in.
Pounds per inch of immersion	340

Related Equipment

Sound equipment	225-lb bell
Bridle size (chain diameter and length)	1¼ in.X15 ft
Mooring chain size	1¼ in.
Sinker size	5,000 lb

Operational Characteristics

Nominal visual range of daymark	3 nmi
Radar range	3.7 nmi
Maximum current	4 kn
Minimum mooring depth	15 ft
Maximum mooring depth	200 ft

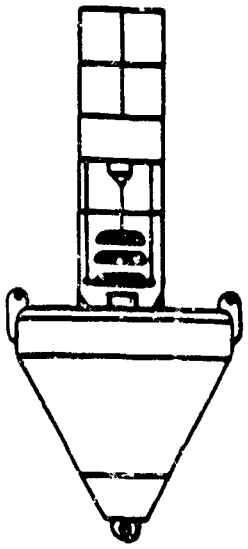

1962 TYPE
STANDARD

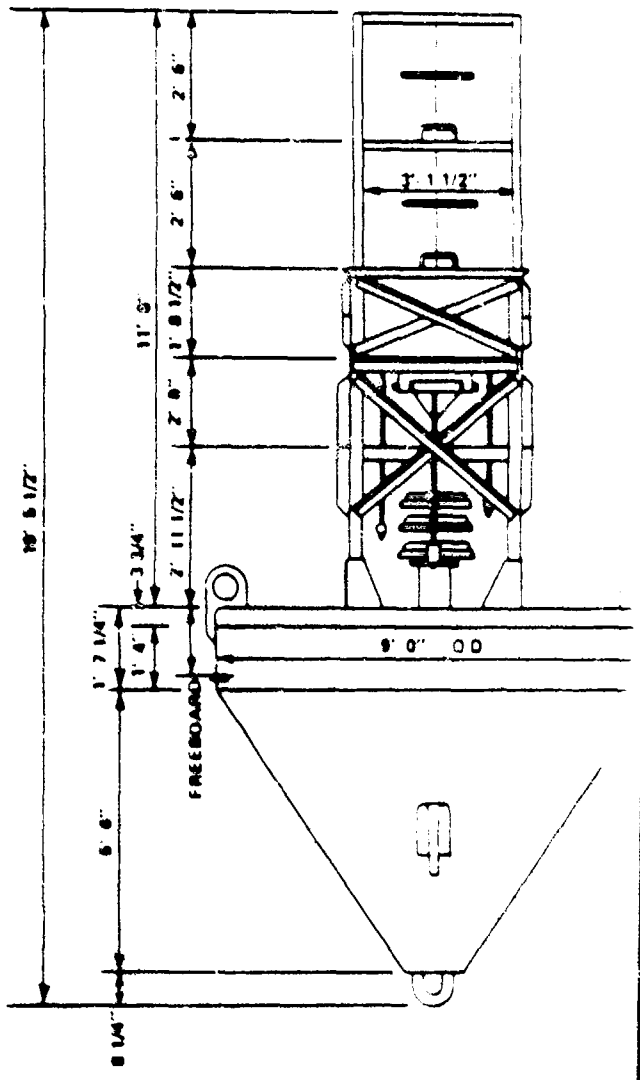

Function. The 9X20 CR buoy is designed and constructed for exposed locations where a lighted buoy is not necessary. This buoy configuration is used with a 20-in. diameter, three-gong, wave-actuated sound signal.

Physical Characteristics

Buoy weight	8,110 lb
Buoy draft (no mooring)	5 ft-5 in.
Freeboard (no mooring)	2 ft-0 in.
Minimum freeboard	9 in.
Pounds per inch of immersion	340

Related Equipment

Sound equipment	3 20-in. gongs
Bridle size (chain diameter and length)	1¼ in.X15 ft
Mooring chain size	1¼ in.
Sinker size	5,000 lb

Operational Characteristics

Nominal visual range of daymark	3 nmi
Radar range	3.7 nmi
Maximum current	4 kn
Minimum mooring depth	15 ft
Maximum mooring depth	200 ft

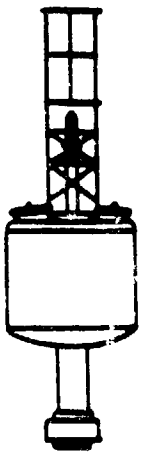

1962 TYPE STANDARD

Function. The 8X26 WR buoy is designed and constructed for exposed or semiexposed locations. It is the same as the 8X26 LWR (Data Sheet 2-D(8)), except that the lighting equipment is not installed. This buoy configuration is used with a four-ball whistle and whistle valve for the wave-actuated sound signal.

Physical Characteristics

Buoy weight	12,131 lb
Buoy draft (no mooring)	10 ft-9 in.
Freeboard (no mooring)	2 ft-2 in.
Minimum freeboard	1 ft-3 in.
Pounds per inch of immersion	250

Related Equipment

Sound equipment	4-ball whistle
Bridle size (chain diameter and length)	1¼ in.X15 ft
Mooring chain size	1¼ in.
Sinker size	8,500 lb

Operational Characteristics

Nominal visual range of daymark	3.2 nmi
Radar range	3.7 nmi
Maximum current	4 kn

Operational Characteristics (cont'd)

Minimum mooring depth	25
Maximum mooring depth	117

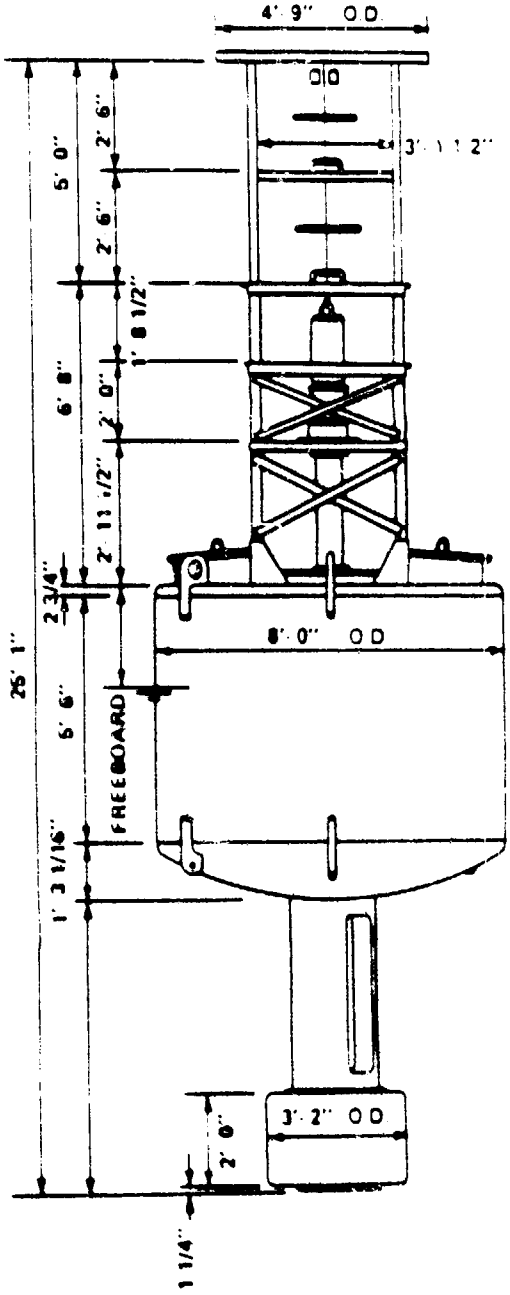

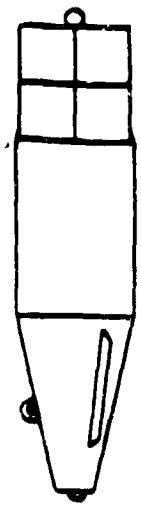

1952 TYPE

STANDARD

Function. The 1 CR buoy is designed and constructed for the most exposed locations, where an unlighted CAN buoy is required.

Physical Characteristics

Buoy weight	5,600 lb
Buoy draft (no mooring)	8 ft-0 in.
Freeboard (no mooring)	6 ft-0 in.
Minimum freeboard	2 ft-5 in.
Pounds per inch of immersion	105

Related Equipment

Mooring chain size	1 1/8 in.
Sinker size	5,000 lb

Operational Characteristics

Nominal visual range of daymark	3.8 nmi
Radar range	3.5 nmi
Maximum current	6 kn
Minimum mooring depth	15 ft
Maximum mooring depth	236 ft

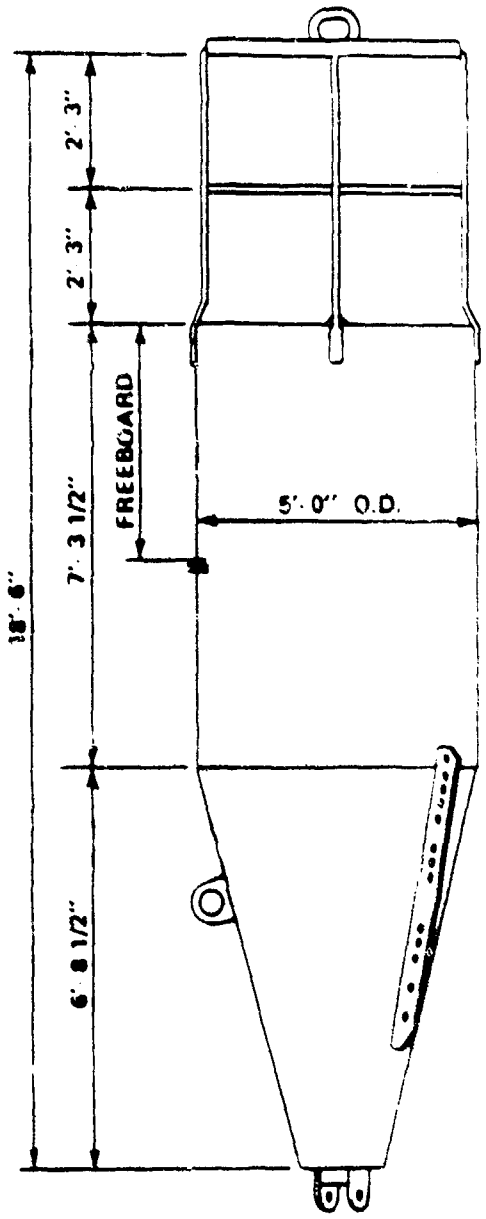

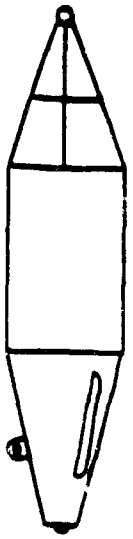

1952 TYPE STANDARD

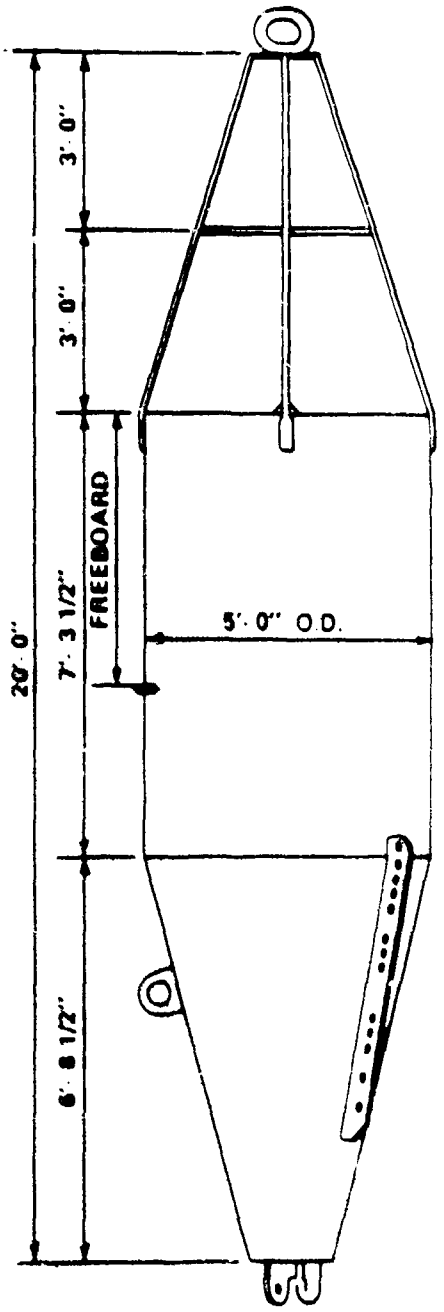

Function. The 1 NR buoy is designed and constructed for the most exposed locations, where an unlighted NUN buoy is required.

Physical Characteristics

Buoy weight	5,400 lb
Buoy draft (no mooring)	7 ft-11 in.
Freeboard (no mooring)	6 ft-1 in.
Minimum freeboard	2 ft-5 in.
Pounds per inch of immersion	105

Related Equipment

Mooring chain size	1 1/8 in.
Sinker size	5,000 lb

Operational Characteristics

Nominal visual range of daymark	3.5 nmi
Radar range	3.5 nmi
Maximum current	6 kn
Minimum mooring depth	15 ft
Maximum mooring depth	241 ft

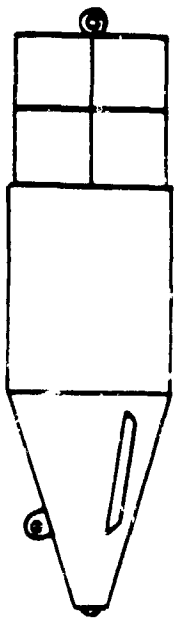

1952 TYPE
STANDARD

Function. The 2 CR buoy is designed and constructed for exposed or semiexposed locations, where an unlighted CAN buoy is required.

Physical Characteristics

Buoy weight	2,700 lb
Buoy draft (no mooring)	6 ft-1 in.
Freeboard (no mooring)	3 ft-11 in.
Minimum freeboard	1 ft-0 in.
Pounds per inch of immersion	67

Related Equipment

Mooring chain size	7/8 in.
Sinker size	4,000 lb

Operational Characteristics

Nominal visual range of daymark	2.8 nmi
Radar range	2.5 nmi
Maximum current	6 kn
Minimum mooring depth	15 ft
Maximum mooring depth	200 ft

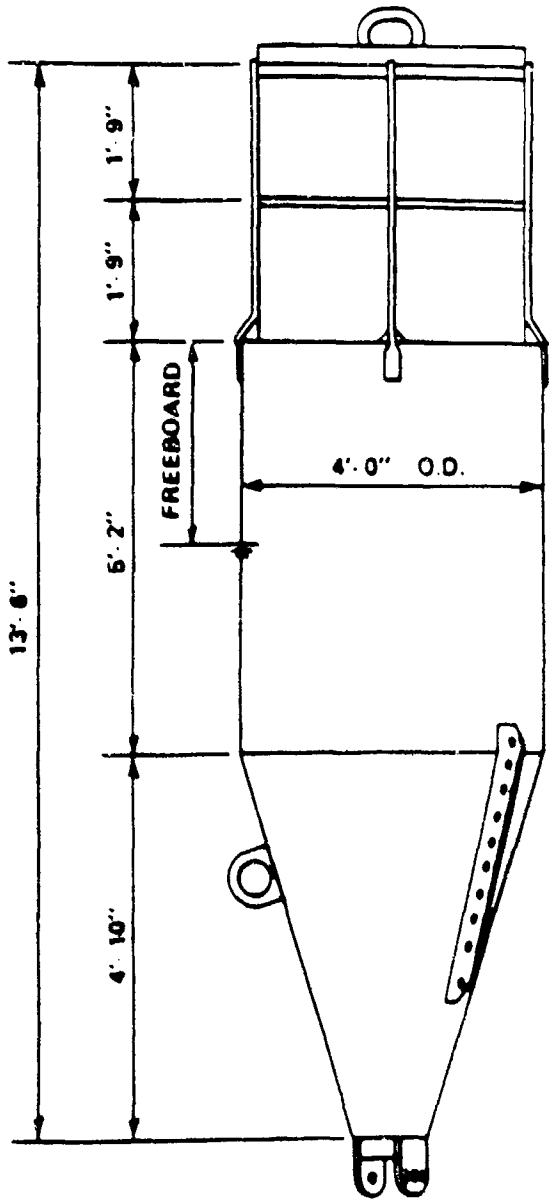

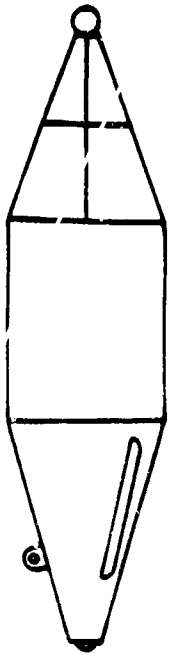

1952 TYPE
STANDARD

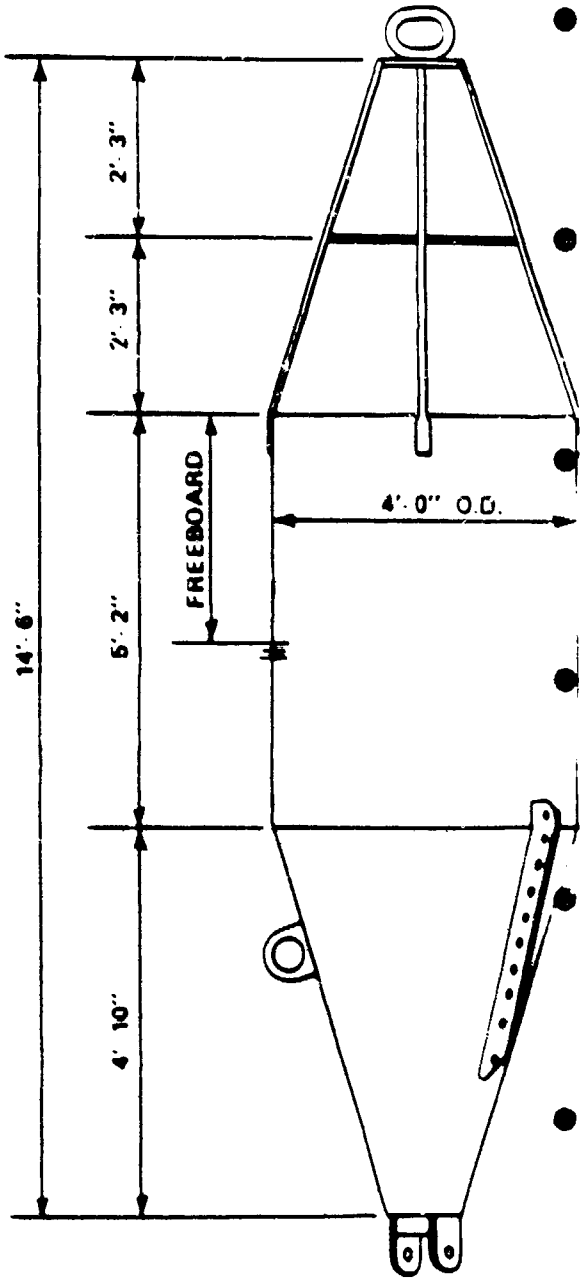

Function. The 2 NR buoy is designed and constructed for exposed or semiexposed locations, where an unlighted NUN buoy is required.

Physical Characteristics

Buoy weight	2,600 lb
Buoy draft (no mooring)	6 ft-0 in.
Freeboard (no mooring)	4 ft-0 in.
Minimum freeboard	1 ft-0 in.
Pounds per inch of immersion	67

Related Equipment

Mooring chain size	7/8 in.
Sinker size	4,000 lb

Operational Characteristics

Nominal visual range of daymark	2.6 nmi
Radar range	3 nmi
Maximum current	6 kn
Minimum mooring depth	15 ft
Maximum mooring depth	205 ft

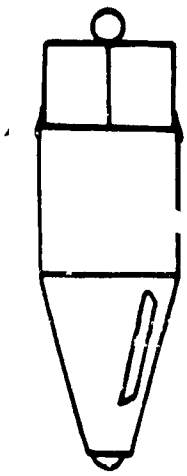

1952 TYPE
STANDARD

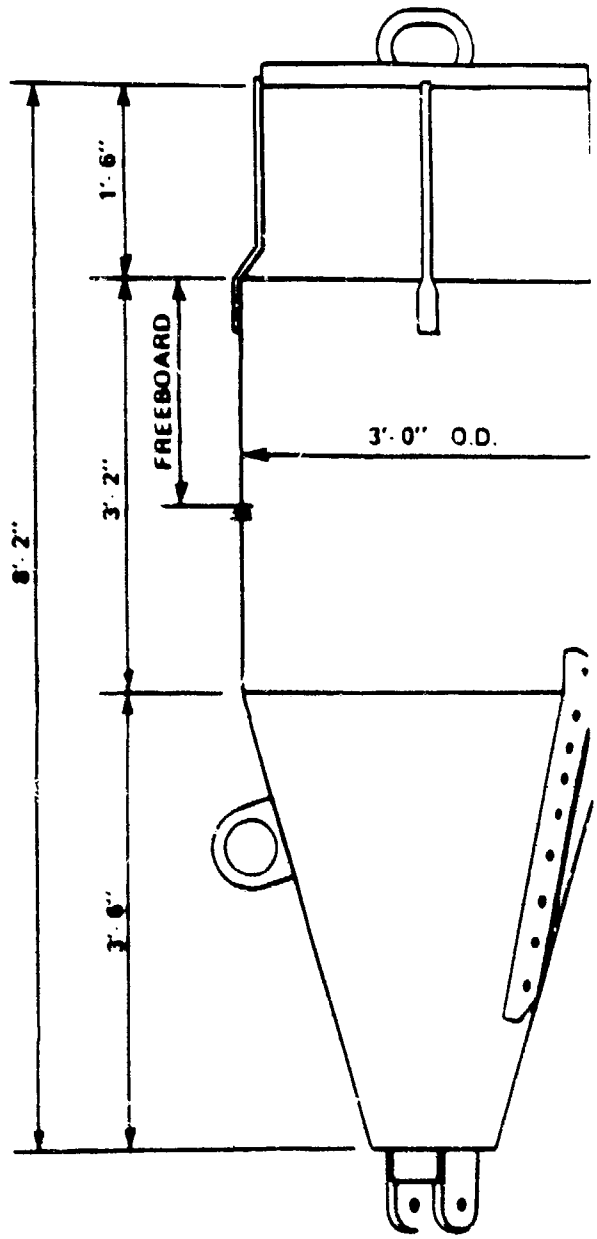

Function. The 3 CR buoy is designed and constructed for semiexposed or protected locations, where an unlighted CAN buoy is required.

Physical Characteristics

Buoy weight	955 lb
Buoy draft (no mooring)	4 ft-0 in.
Freeboard (no mooring)	2 ft-8 in.
Minimum freeboard	9 in.
Pounds per inch of immersion	38

Related Equipment

Mooring chain size	3/4 in.
Sinker size	3,000 lb

Operational Characteristics

Nominal visual range of daymark	1.4 nmi
Radar range	1.5 nmi
Maximum current	5 kn
Minimum mooring depth	10 ft
Maximum mooring depth	102 ft

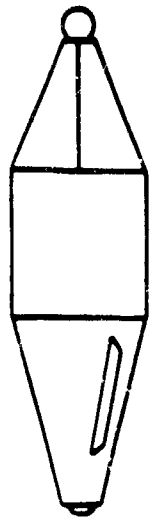

1952 TYPE STANDARD

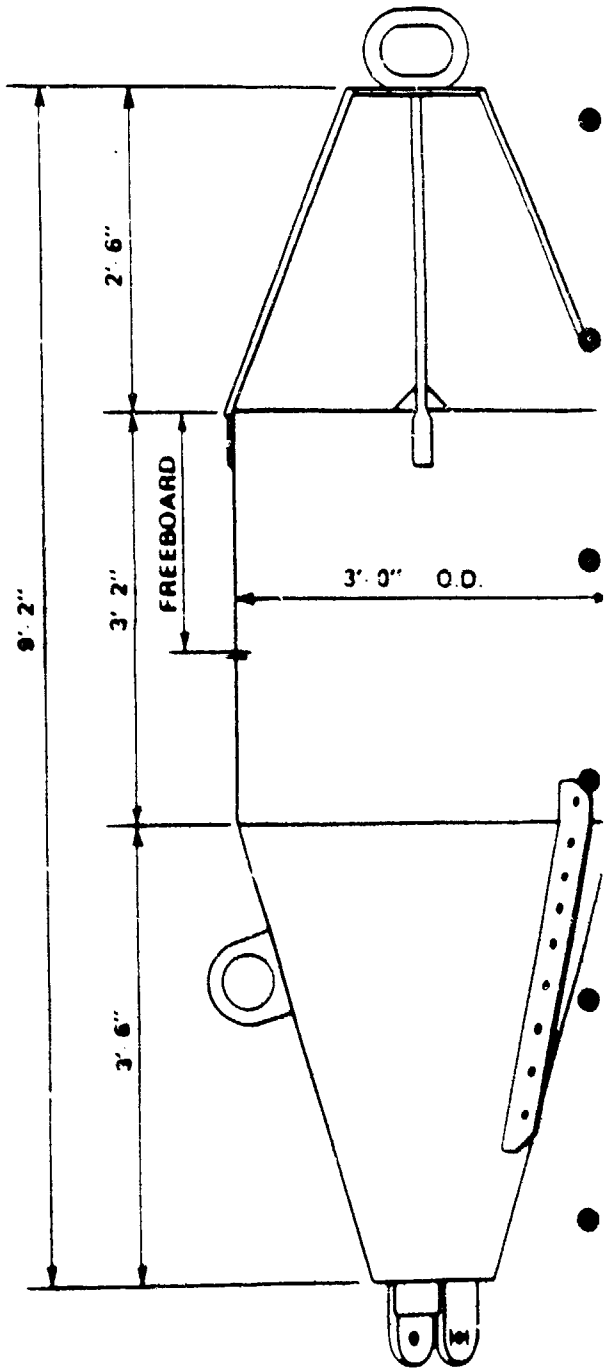

Function. The 3 NR buoy is designed and constructed for semiexposed or protected locations, where an unlighted NUN buoy is required.

Physical Characteristics

Buoy weight	935 lb
Buoy draft (no mooring)	3 ft-11 in.
Freeboard (no mooring)	2 ft-9 in.
Minimum freeboard	9 in.
Pounds per inch of immersion	38

Related Equipment

Mooring chain size	3/4 in.
Sinker size	3,000 lb

Operational Characteristics

Nominal visual range of daymark	1.4 nmi
Radar range	1.75 nmi
Maximum current	5 kn
Minimum mooring depth	10 ft
Maximum mooring depth	107 ft

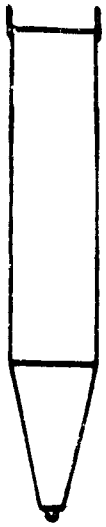

1982 TYPE STANDARD

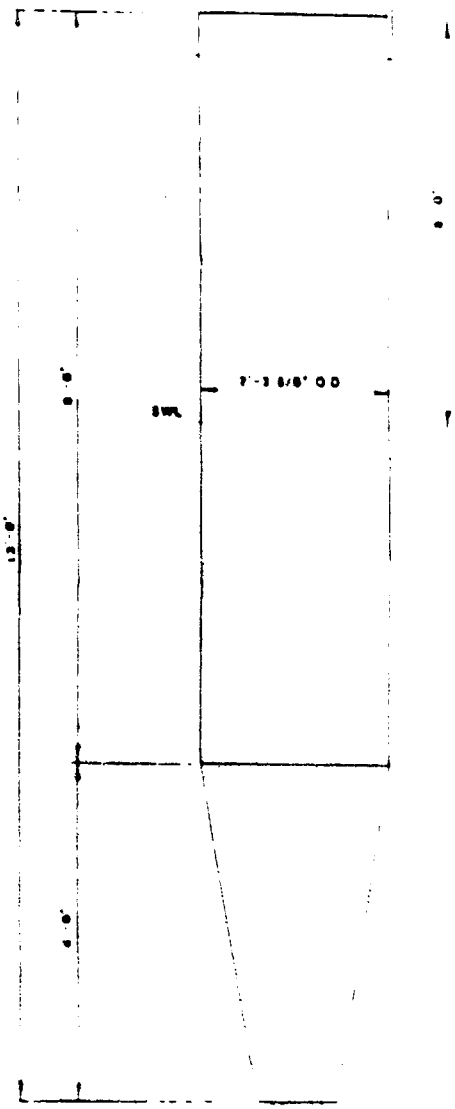

Function. The 3CI buoy is designed and constructed for use in ice conditions where an unlighted buoy is required.

Physical Characteristics.

Buoy weight	1,565 lb
Buoy draft (no mooring)	8 ft-0 in
Freeboard (no mooring)	5 ft-0 in
Minimum freeboard	3 ft-6 in
Pounds per inch immersion	22.2

Related Equipment.

Mooring chain size	3/4 in
Sinker size	3,000 lb

Operational Characteristics.

Nominal visual range of daymark	1 nmi
Maximum current	3 kts
Minimum mooring depth	10 ft
Maximum mooring depth	
1/2 inch chain	150 ft
3/4 inch chain	75 ft

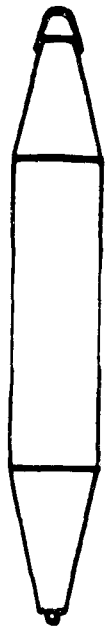

1982 TYPE
STANDARD

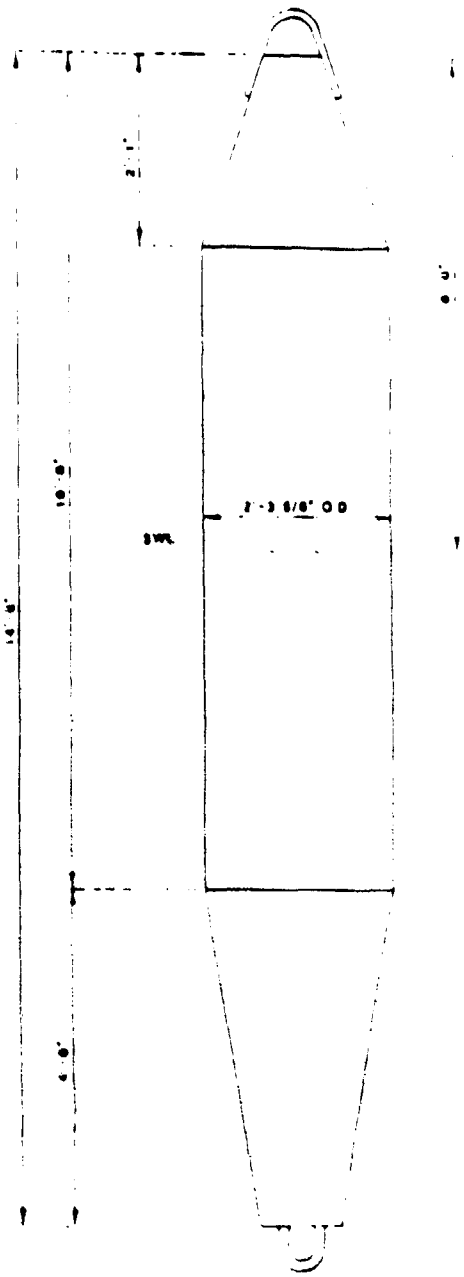

Function. The 3MI buoy is designed and constructed for use in ice conditions where an unlighted buoy is required.

Physical Characteristics.

Buoy weight	1,565 lb
Buoy draft (no mooring)	8 ft-0 in
Freeboard (no mooring)	6 ft-0 in
Minimum freeboard	4 ft-6 in
Pounds per inch immersion	22.2

Related Equipment.

Mooring chain size	3/4 in
Sinker size	3,000 lb

Operational Characteristics.

Nominal visual range of daymark	1 nmi
Maximum current	3 kts
Minimum mooring depth	10 ft
Maximum mooring depth	
1/2 inch chain	150 ft
3/4 inch chain	75 ft

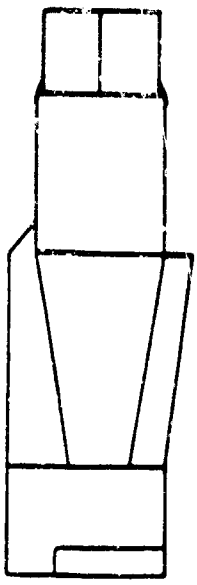

1952 TYPE
STANDARD

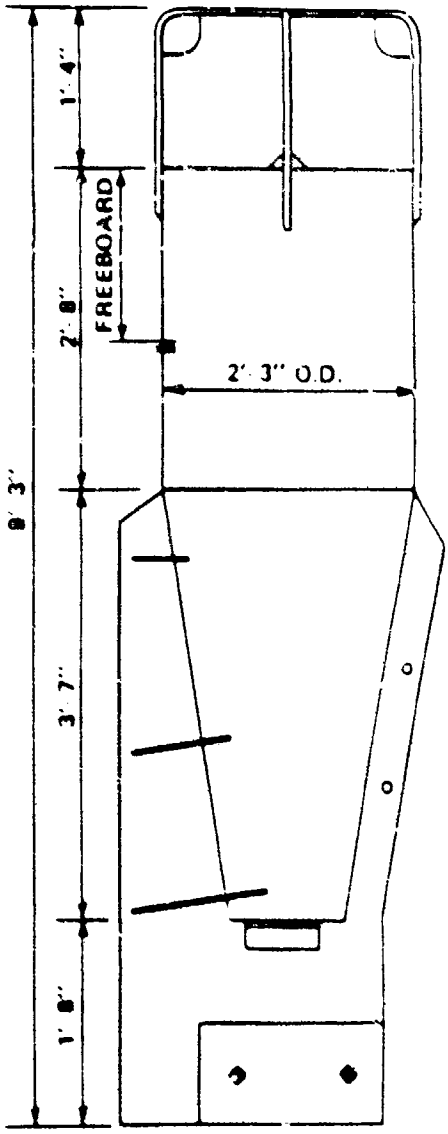

Function. The 4 CR buoy is designed and constructed for river environments and protected locations, where an unlighted CAN buoy is required. This buoy is foam filled.

Physical Characteristics

Buoy weight	465 lb
Buoy draft (no mooring)	5 ft-0 in.
Freeboard (no mooring)	2 ft-11 in.
Minimum freeboard	1 ft-0 in.
Pounds per inch of immersion	21

Related Equipment

Mooring chain size	7/16 or ½ in.
Mooring wire rope size	½ in.
Sinker size	2,000 lb

Operational Characteristics

Nominal visual range of daymark	1.4 nmi
Radar range	1.5 nmi
Maximum current	5 kn
Minimum mooring depth	10 ft
Maximum mooring depth	132 ft

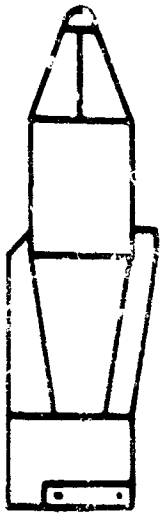

1962 TYPE

STANDARD

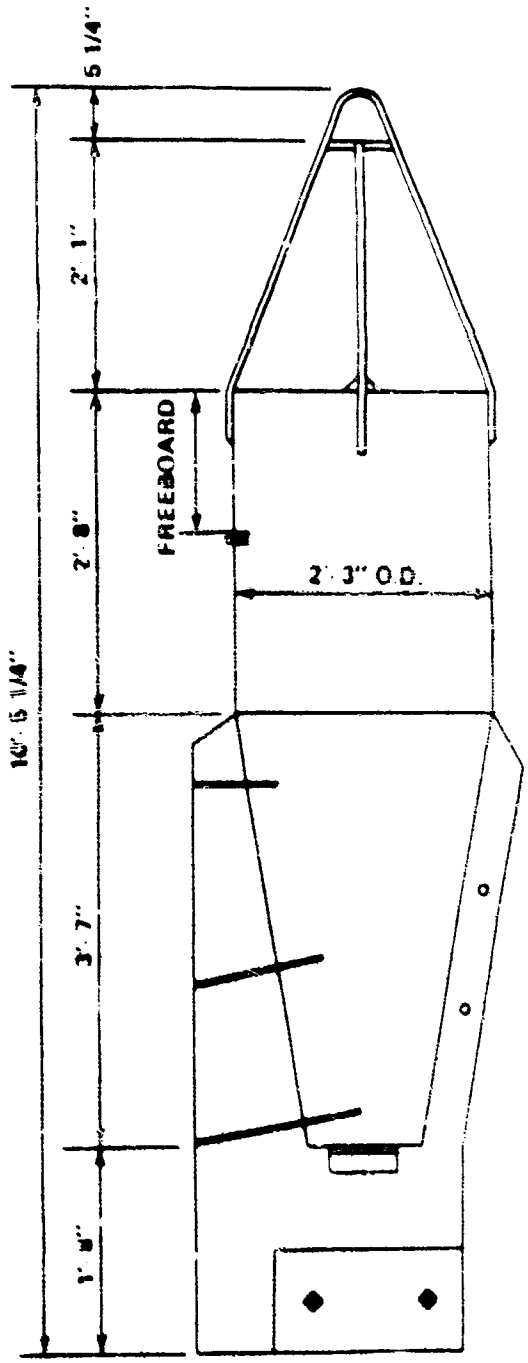

Function. The 4 NR buoy is designed and constructed for river environments and protected locations, where an unlighted NUN buoy is required. This buoy is foam filled.

Physical Characteristics

Buoy weight	470 lb
Buoy draft (no mooring)	5 ft-0 in.
Freeboard (no mooring)	2 ft-8 in.
Minimum freeboard	1 ft-0 in.
Pounds per inch of immersion	21

Related Equipment

Mooring chain size	7/16 or ½ in.
Mooring wire rope size	½ in.
Sinker size	2,000 lb

Operational Characteristics

Nominal visual range of daymark	1.4 nmi
Radar range	1.5 nmi
Maximum current	5 kn
Minimum mooring depth	10 ft
Maximum mooring depth	115 ft

1981 TYPE STANDARD

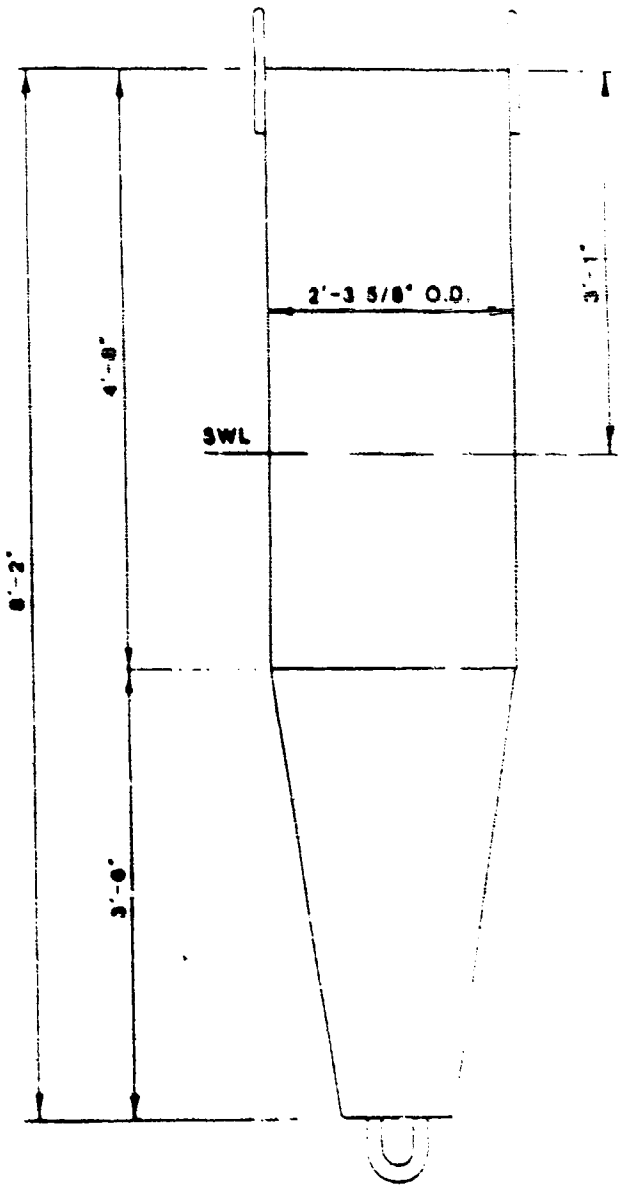

Function. The 5CI buoy is designed and constructed for use in ice conditions where an unlighted buoy is required.

Physical Characteristics.

Buoy weight	700 lb
Buoy draft (no mooring)	5 ft-1 in.
Freeboard (no mooring)	3 ft-1 in.
Minimum freeboard	2 ft-4 in.
Pounds per inch of immersion	22.2

Related Equipment.

Mooring chain size	1/2 in.
Sinker size	2,000 lb

Operational Characteristics.

Nominal visual range of daymark	1 nmi
Maximum current	3 kts
Minimum mooring depth	10 ft
Maximum mooring depth	
3/4 inch chain	25 ft
1/2 inch chain	50 ft

1981 TYPE
STANDARD

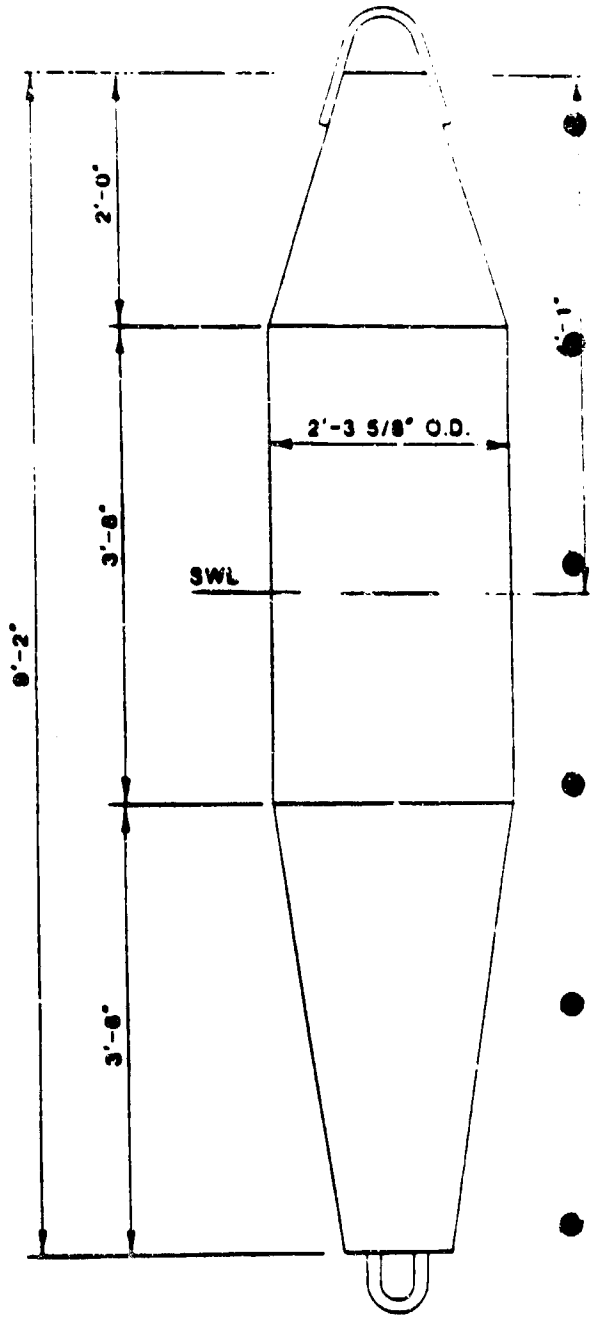

Function. The 5NI buoy is designed and constructed for use in ice conditions where an unlighted nun buoy is required.

Physical Characteristics.

Buoy weight	695 lb
Buoy draft (no mooring)	5 ft-1 in.
Freeboard (no mooring)	4 ft-1 in.
Minimum freeboard	3 ft-4 in.
Pounds per inch of immersion	22.2

Related Equipment.

Mooring chain size	1/2 in.
Sinker size	2,000 lb

Operational Characteristics.

Nominal visual range of daymark	1 nmi
Maximum current	3 kts
Minimum mooring depth	10 ft
Maximum mooring depth	
3/4 inch chain	25 ft
1/2 inch chain	50 ft

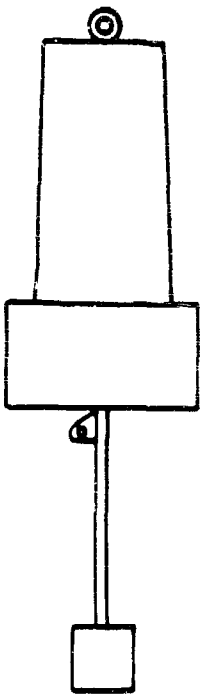

1972 TYPE
STANDARD

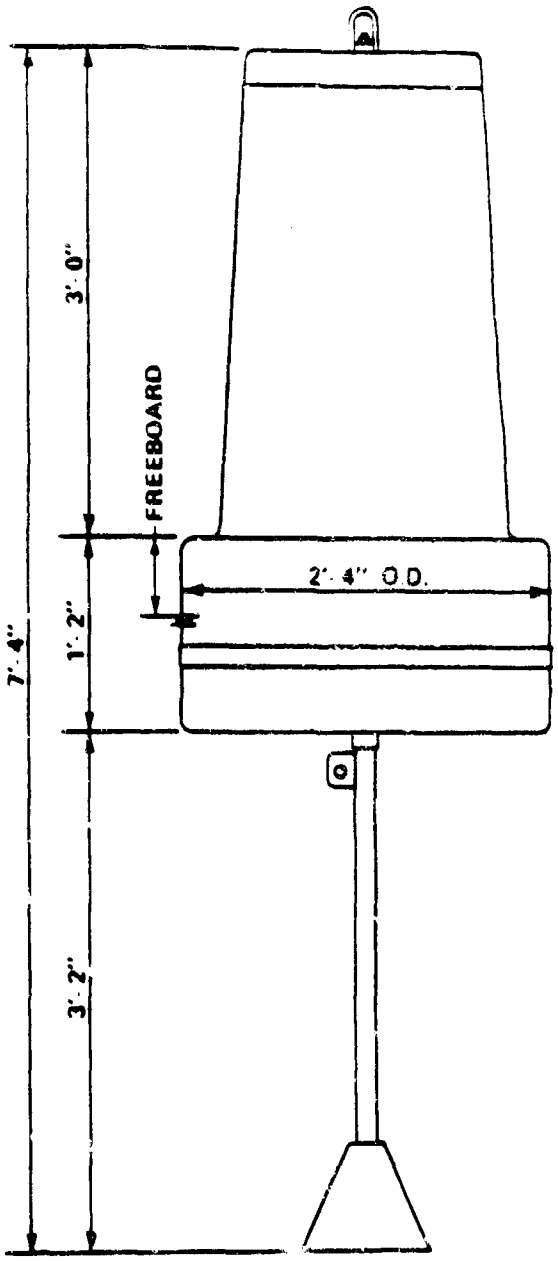

Function. The 5 CPR buoy is designed and constructed for protected locations, where an unlighted CAN buoy is required. This buoy is foam filled. It should not be used in ice.

Physical Characteristics

Buoy weight	150 lb
Buoy draft (no mooring)	4 ft-0 in.
Freeboard (no mooring)	8 in.
Minimum freeboard	3 in.
Pounds per inch of immersion	22

Related Equipment

Mooring chain size	7/16 or ½ in.
Sinker size	500 lb

Operational Characteristics

Nominal visual range of daymark	1 nmi
Radar range	1 nmi
Maximum current	3 kn
Minimum mooring depth	5 ft
Maximum mooring depth	35 ft

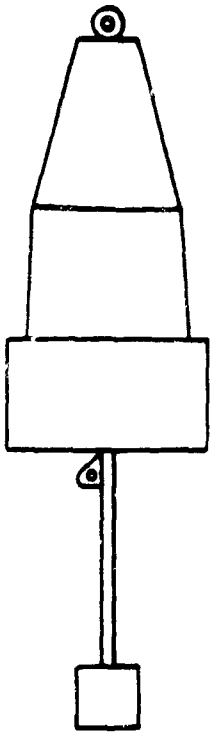

1972 TYPE
STANDARD

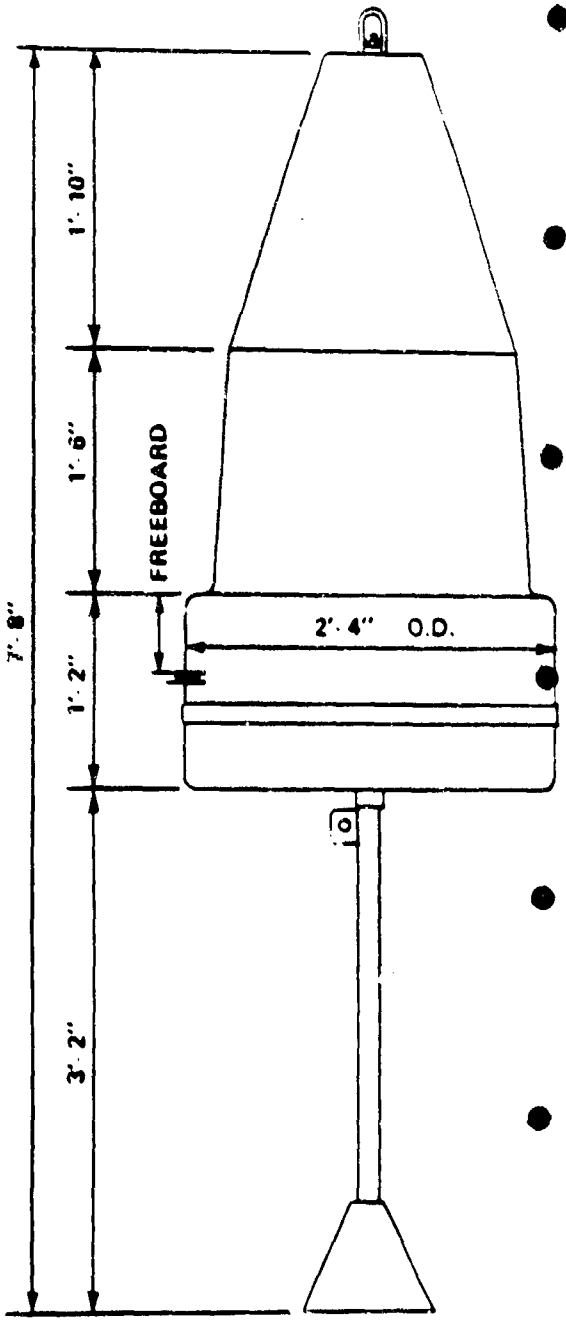

Function. The 5 NPR buoy is designed and constructed for protected locations, where an unlighted NUN buoy is required. This buoy is foam filled. It should not be used in ice.

Physical Characteristics

Buoy weight	150 lb
Buoy draft (no mooring)	4 ft-0 in.
Freeboard (no mooring)	8 in.
Minimum freeboard	3 in.
Pounds per inch of immersion	22

Related Equipment

Mooring chain size	7/16 or ½ in.
Sinker size	500 lb

Operational Characteristics

Nominal visual range of daymark	1 nmi
Radar range	1 nmi
Maximum current	3 kn
Minimum mooring depth	5 ft
Maximum mooring depth	35 ft

1952 TYPE STANDARD

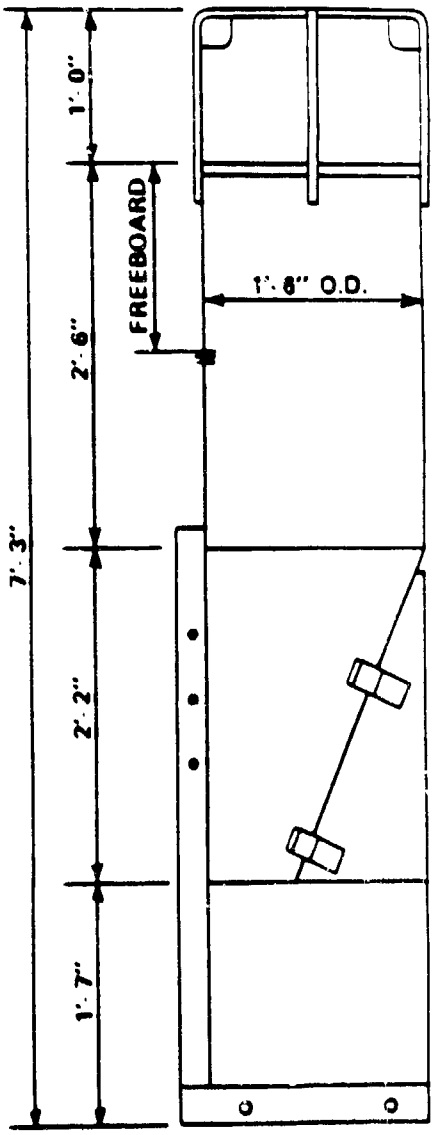

Function. The 6 CR buoy is designed and constructed for river environments and protected locations, where an unlighted CAN buoy is required. This buoy is foam filled.

Physical Characteristics

Buoy weight	160 lb
Buoy draft (no mooring)	3 ft-10 in.
Freeboard (no mooring)	2 ft-6 in.
Minimum freeboard	6 in.
Pounds per inch of immersion	9

Related Equipment

Mooring chain size	7/16 or ½ in.
Mooring wire rope size	3/8 in.
Sinker size	500 lb

Operational Characteristics

Nominal visual range of daymark	1 nmi
Radar range	1 nmi
Maximum current	2.5 kn
Minimum mooring depth	6 ft
Maximum mooring depth	60 ft

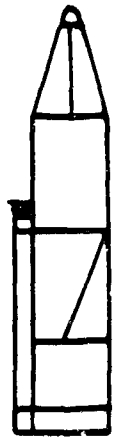

1952 TYPE STANDARD

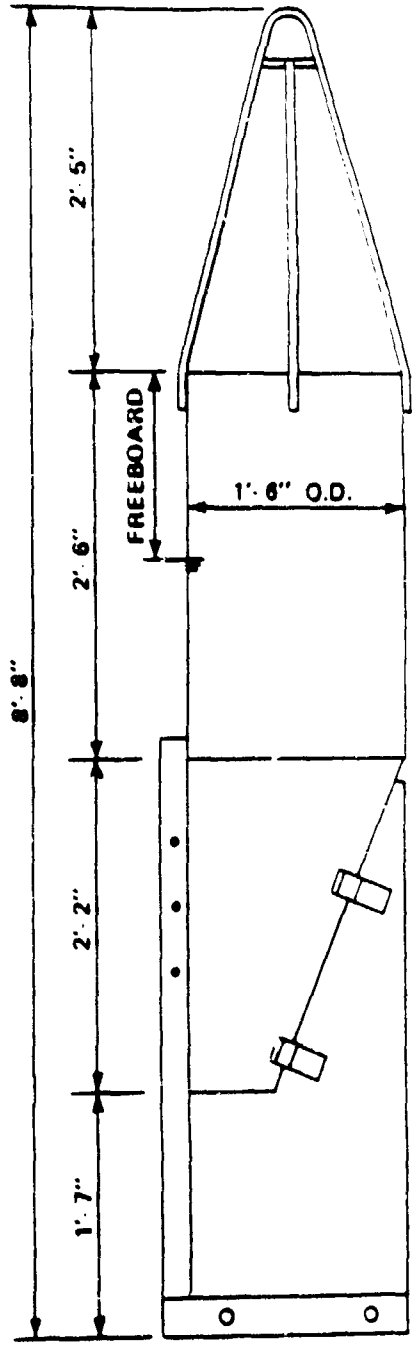

Function. The 6 NR buoy is designed and constructed for river environments and protected locations, where an unlighted NUN buoy is required. This buoy is foam filled.

Physical Characteristics

Buoy weight	165 lb
Buoy draft (no mooring)	4 ft-0 in.
Freeboard (no mooring)	2 ft-8 in.
Minimum freeboard	6 in.
Pounds per inch of immersion	9

Related Equipment

Mooring chain size	7/16 or ½ in.
Mooring wire rope size	3/8 in.
Sinker size	500 lb

Operational Characteristics

Nominal visual range of daymark	1 nmi
Radar range	1 nmi
Maximum current	2.5 kn
Minimum mooring depth	6 ft
Maximum mooring depth	64 ft

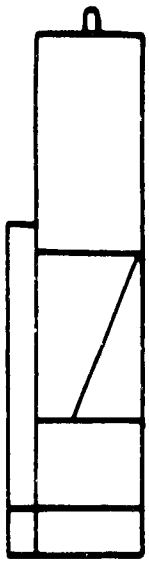

1952 TYPE STANDARD

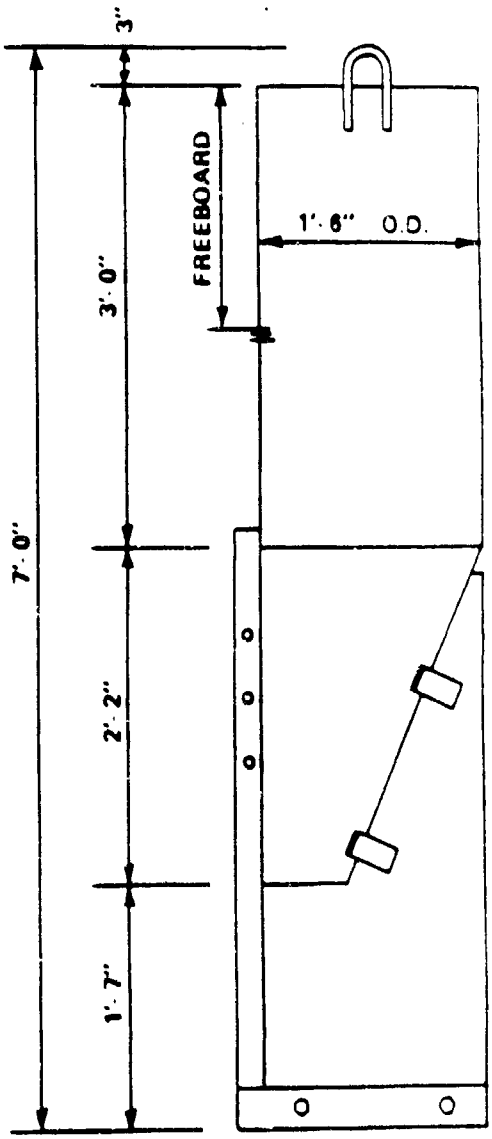

Function. The 6 CT buoy is designed and constructed for river environments, where a radar reflector is not required. This buoy is foam filled.

Physical Characteristics

Buoy weight	165 lb
Buoy draft (no mooring)	4 ft-0 in.
Freeboard (no mooring)	2 ft-9 in.
Minimum freeboard	1 ft-6 in.
Pounds per inch of immersion	9

Related Equipment

Mooring chain size	7/16 or ½ in.
Mooring wire rope size	3/8 in.
Sinker size	500 lb

Operational Characteristics

Nominal visual range of daymark	1 nmi
Radar range	.5 nmi
Maximum current	2.5 kn
Minimum mooring depth	6 ft
Maximum mooring depth	37 ft

1952 TYPE STANDARD

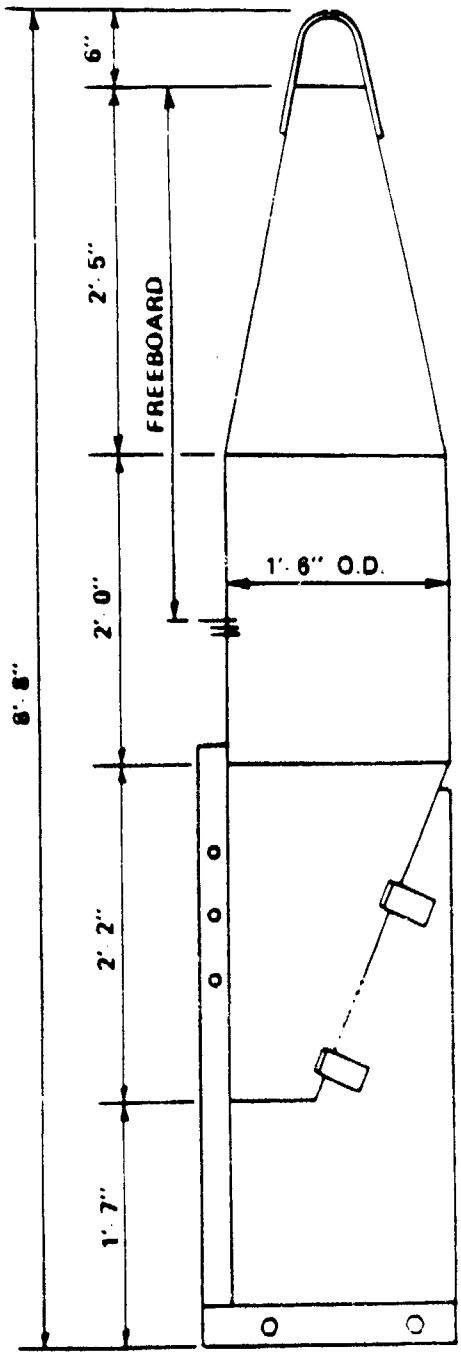

Function. The 6 NT buoy is designed and constructed for river environments, where a radar reflector is not required. This buoy is foam filled.

Physical Characteristics

Buoy weight	170 lb
Buoy draft (no mooring)	4 ft-0 in.
Freeboard (no mooring)	4 ft-2 in.
Minimum freeboard	2 ft-6 in.
Pounds per inch of immersion	6

Related Equipment

Mooring chain size	7/16 or ½ in.
Mooring wire rope size	3/8 in.
Sinker size	500 lb

Operational Characteristics

Nominal visual range of daymark	1 nmi
Radar range	.5 nmi
Maximum current	2.5 kn
Minimum mooring depth	6 ft
Maximum mooring depth	49 ft

6 CPR

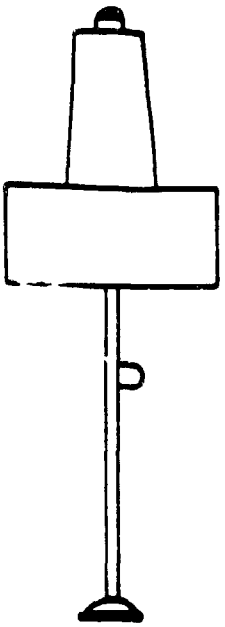

1972 TYPE
STANDARD

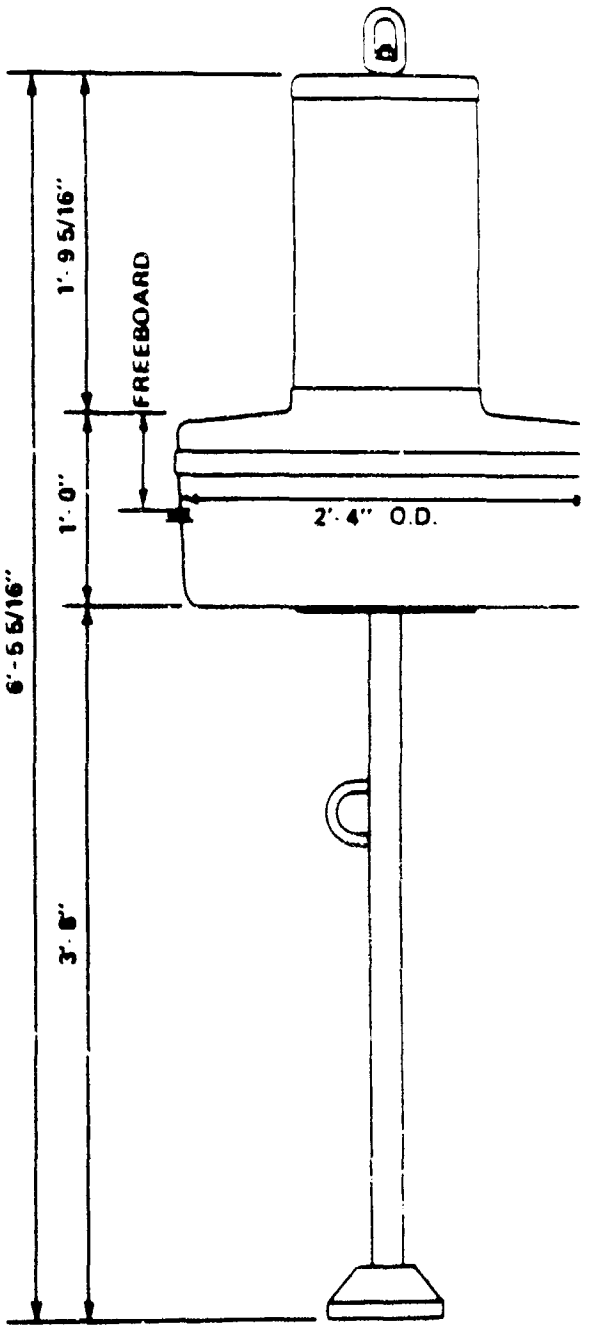

Function. The 6 CPR buoy is designed and constructed for protected locations, where an unlighted CAN buoy is required. This buoy is foam filled. It should not be used in ice.

Physical Characteristics

Buoy weight	85 lb
Buoy draft (no mooring)	4 ft-0 in.
Freeboard (no mooring)	8½ in.
Minimum freeboard	3 in.
Pounds per inch of immersion	22

Related Equipment

Mooring chain size	7/16 or ½ in.
Sinker size	500 lb

Operational Characteristics

Nominal visual range of daymark	.5 nmi
Radar range	.75 nmi
Maximum current	3 kn
Minimum mooring depth	5 ft
Maximum mooring depth	35 ft

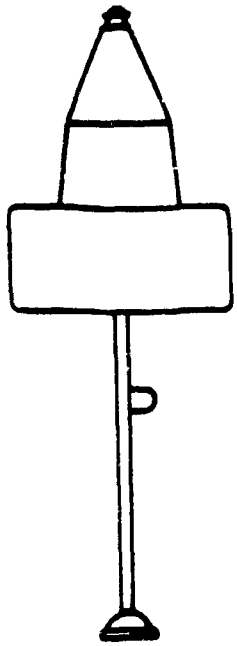

1972 TYPE
STANDARD

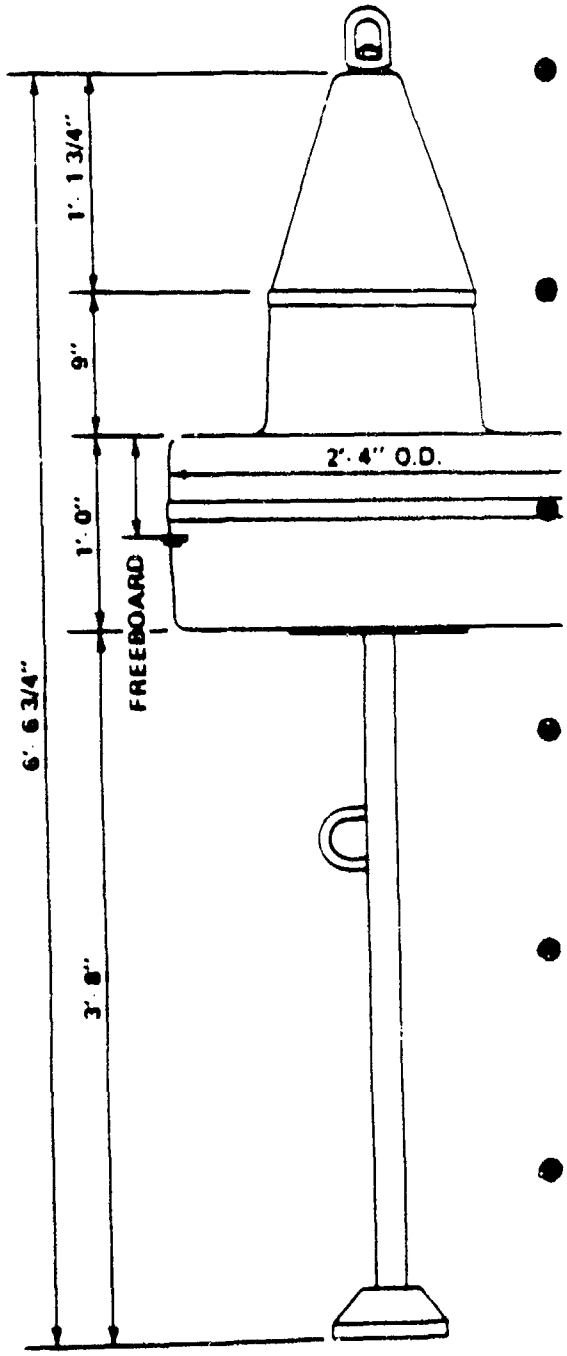

Function. The 6 NPR buoy is designed and constructed for protected locations, where an unlighted NUN buoy is required. This buoy is foam filled. It should not be used in ice.

Physical Characteristics

Buoy weight	85 lb
Buoy draft (no mooring)	4 ft-0 in.
Freeboard (no mooring)	8½ in.
Minimum freeboard	3 in.
Pounds per inch of immersion	22

Related Equipment

Mooring chain size	7/16 or ½ in.
Sinker size	500 lb

Operational Characteristics

Nominal visual range of daymark	.5 nmi
Radar range	.75 nmi
Maximum current	3 kn
Minimum mooring depth	5 ft
Maximum mooring depth	35 ft

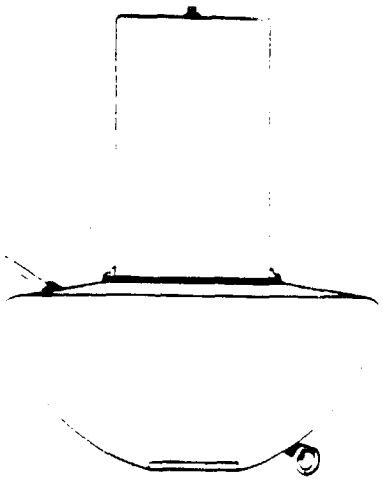

Function. The FCPR buoy is designed and constructed for fast water locations where an unlighted CAN buoy is required. The hull portion of the buoy is foam filled.

Physical Characteristics

Buoy weight	161 lb
Buoy draft (no mooring)	3 in.
Freeboard (no mooring)	21 in.
Minimum freeboard	1 in.
Pounds per inch of immersion	29

Related Equipment

Mooring chain size	½ in.
Wire rope size	½ in.
Sinker size	500 lb or larger (depending on current)

Operational Characteristics

Nominal visual range of daymark	1 nmi
Radar range	.75 nmi
Maximum current	7 kn
Minimum mooring depth	3 ft
Maximum mooring depth	100 ft

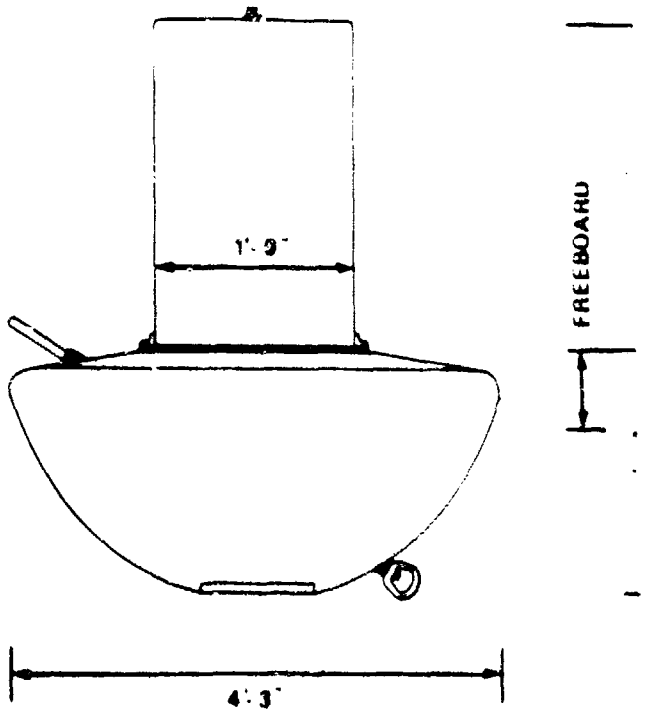

Figure 2-72. Dimensions of the FCPR.

Additional Data. Two sizes of fast water buoys were bought in quantity for evaluation. These buoys were called FCR3 and FCR4. The FCR3 buoy is the same size as the FCPR buoy. The FCR4 buoy has a hull that is 5 ft in diameter and a daymark that is somewhat larger than the FCR3 daymark.

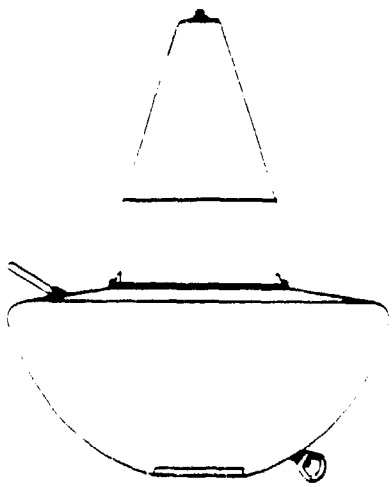

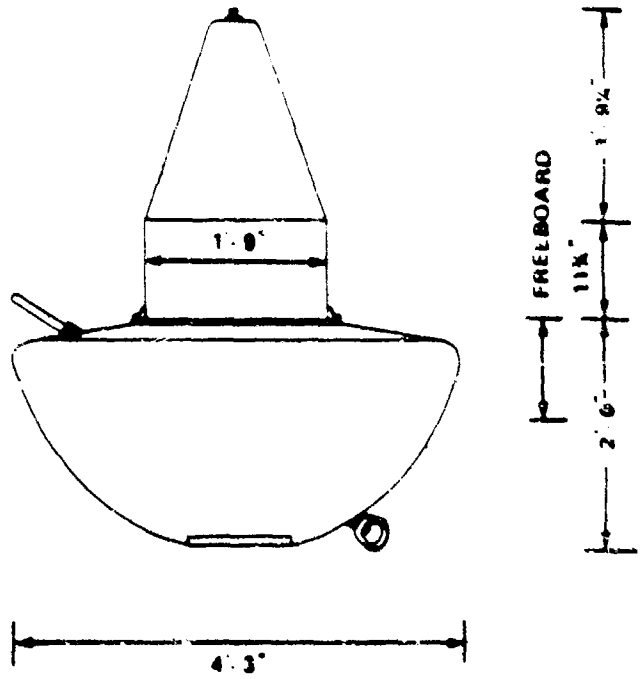

Function. The FNPR buoy is designed and constructed for fast water locations where an unlighted NUN buoy is required. The hull portion of the buoy is foam filled.

Physical Characteristics

Buoy weight	161 lb
Buoy draft (no mooring)	3 in.
Freeboard (no mooring)	21 in.
Minimum freeboard	1 in.
Pounds per inch of immersion	29

Related Equipment

Mooring chain size	½ in.
Wire rope size	½ in.
Sinker size	500 lb or larger (depending on current)

Operational Characteristics

Nominal visual range of daymark	1 nmi
Radar range	.75 nmi
Maximum current	7 kn
Minimum mooring depth	3 ft
Maximum mooring depth	100 ft

Additional Data. Two sizes of fast water buoys were bought in quantity for evaluation. These buoys were called FNR3 and FNR4. The FNR3 buoy is the same size as the FNPR buoy except that the daymark is slightly shorter. The FNR4 buoy has a hull that is 5 ft in diameter and a daymark that is somewhat larger than the FNR3 daymark.

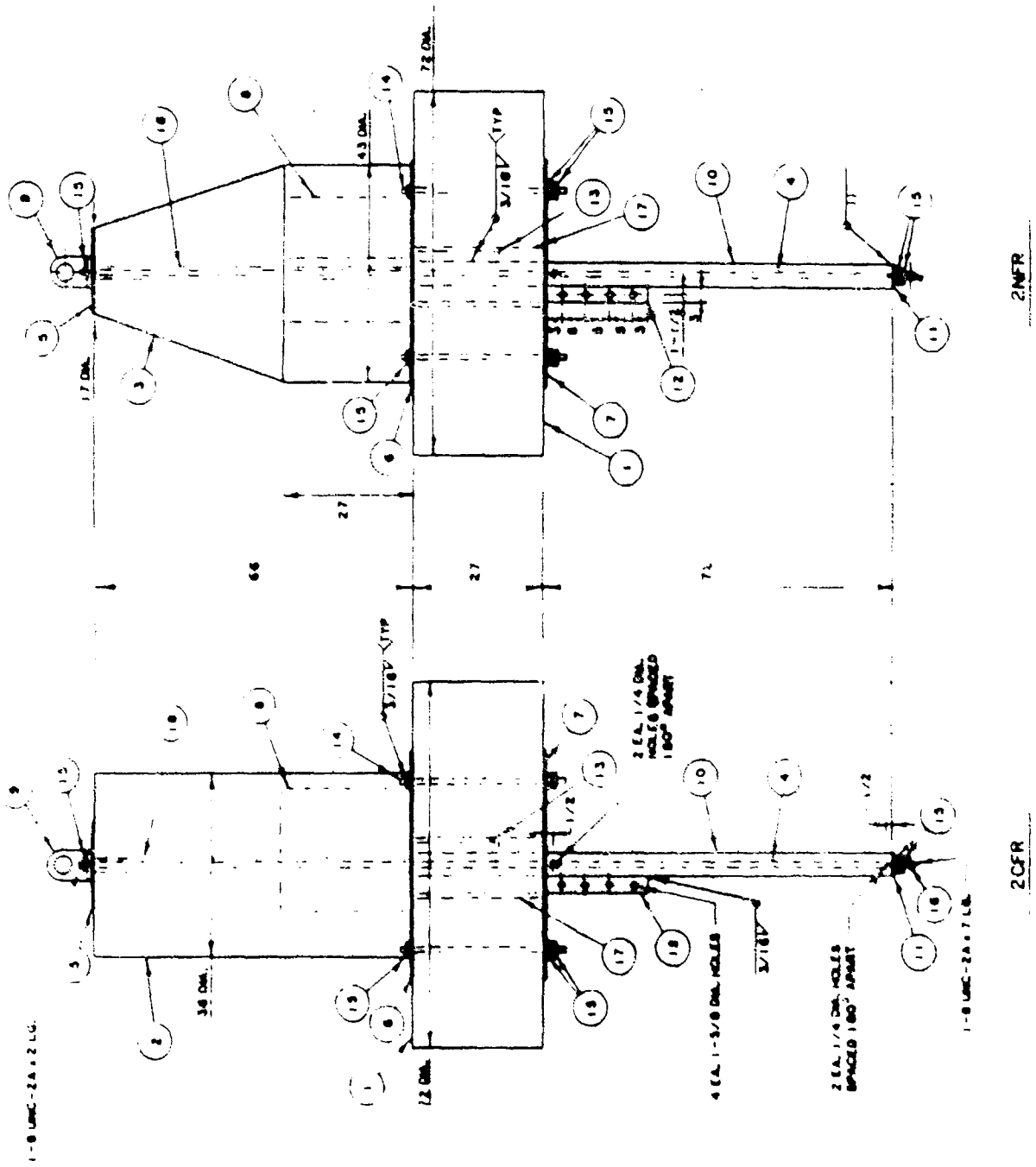
2NFR
2CFR
1-8 UNC-2A x 2 LG.
1-8 UNC-2A x 1 LG.
3/16
TYP
1/2
27
66
71
4 EA. 1-3/8 DIA. HOLES
2 EA. 1/4 DIA. HOLES SPACED 180° APART

C-271

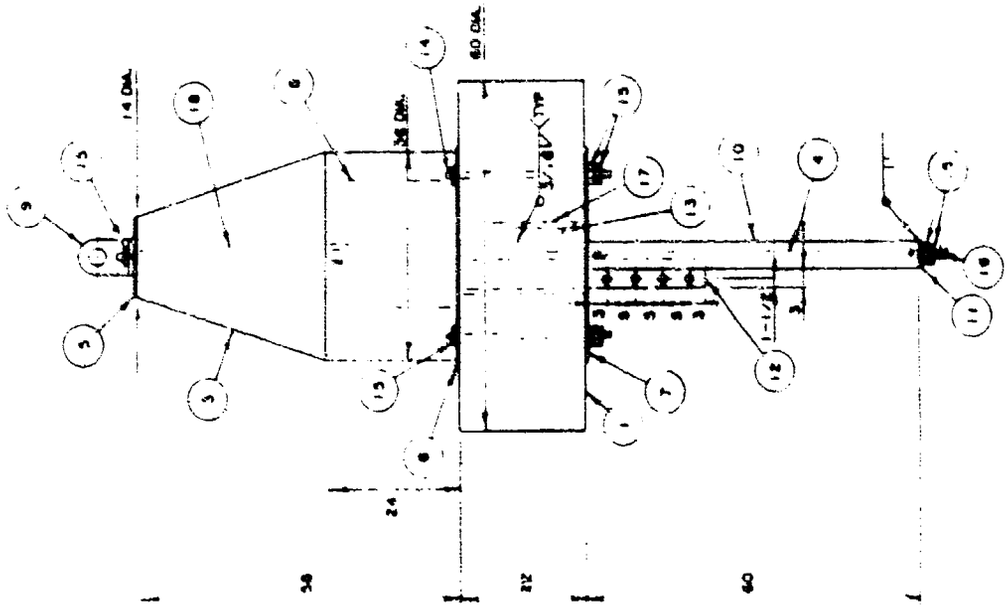

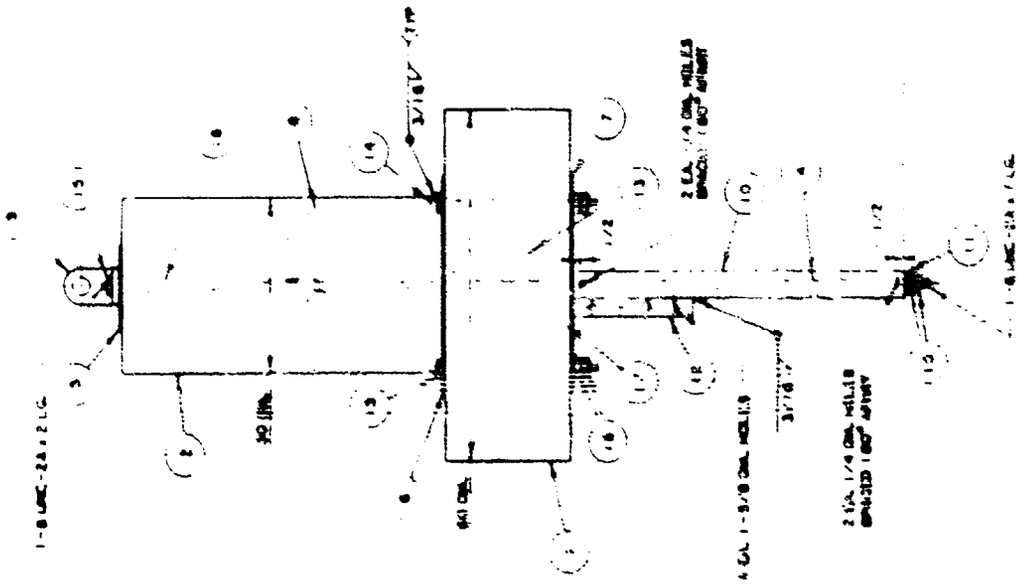

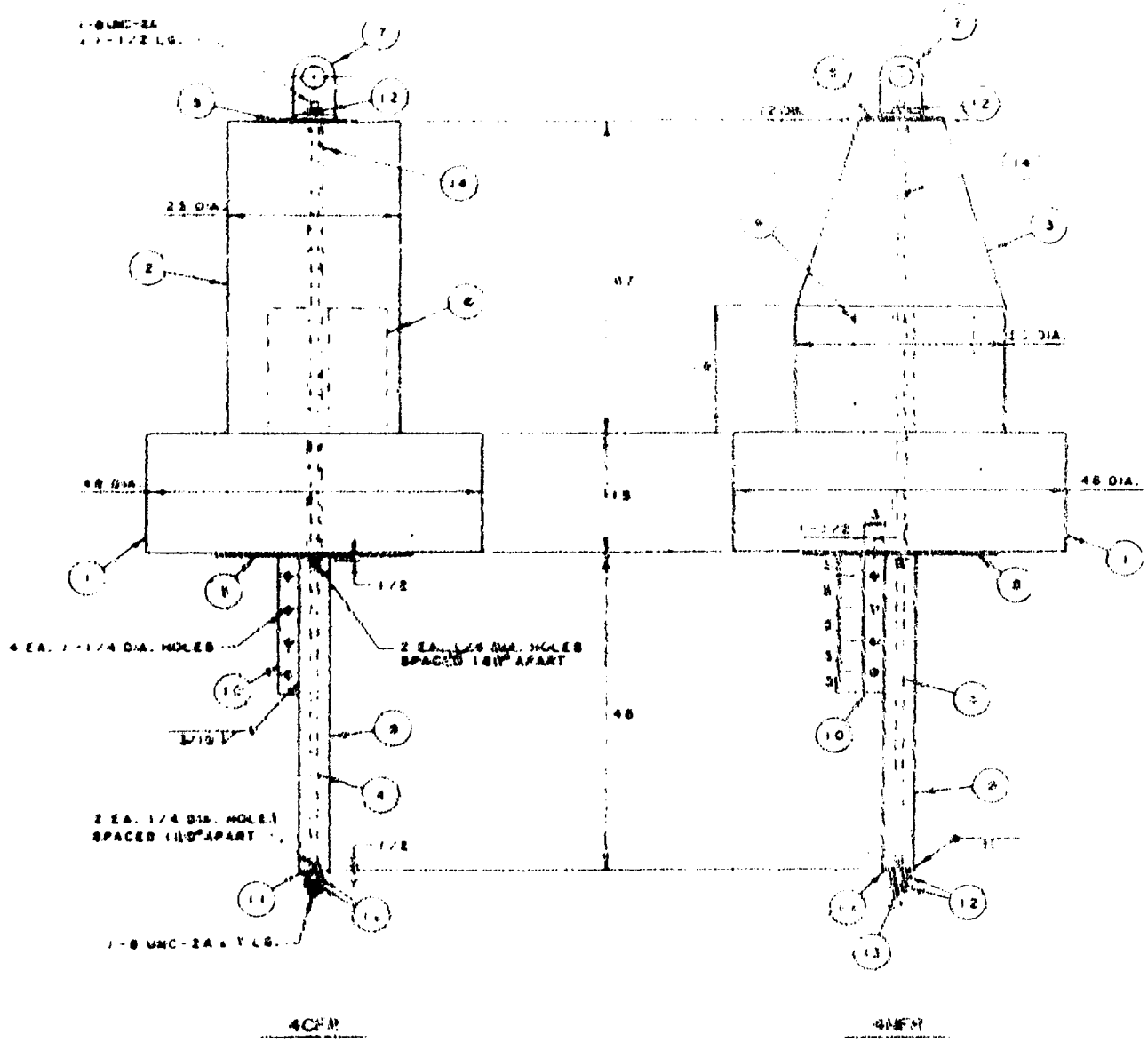
4 EA. 1-1/4 DIA. HOLES
2 EA. 1/4 DIA. HOLES SPACED 1.81" APART
2 EA. 1/4 DIA. HOLES SPACED 1.10" APART
1-8 UNC-2A x 7 LG.
2.5 DIA.
4.8 DIA.
1/2
48
115
4.8 DIA.

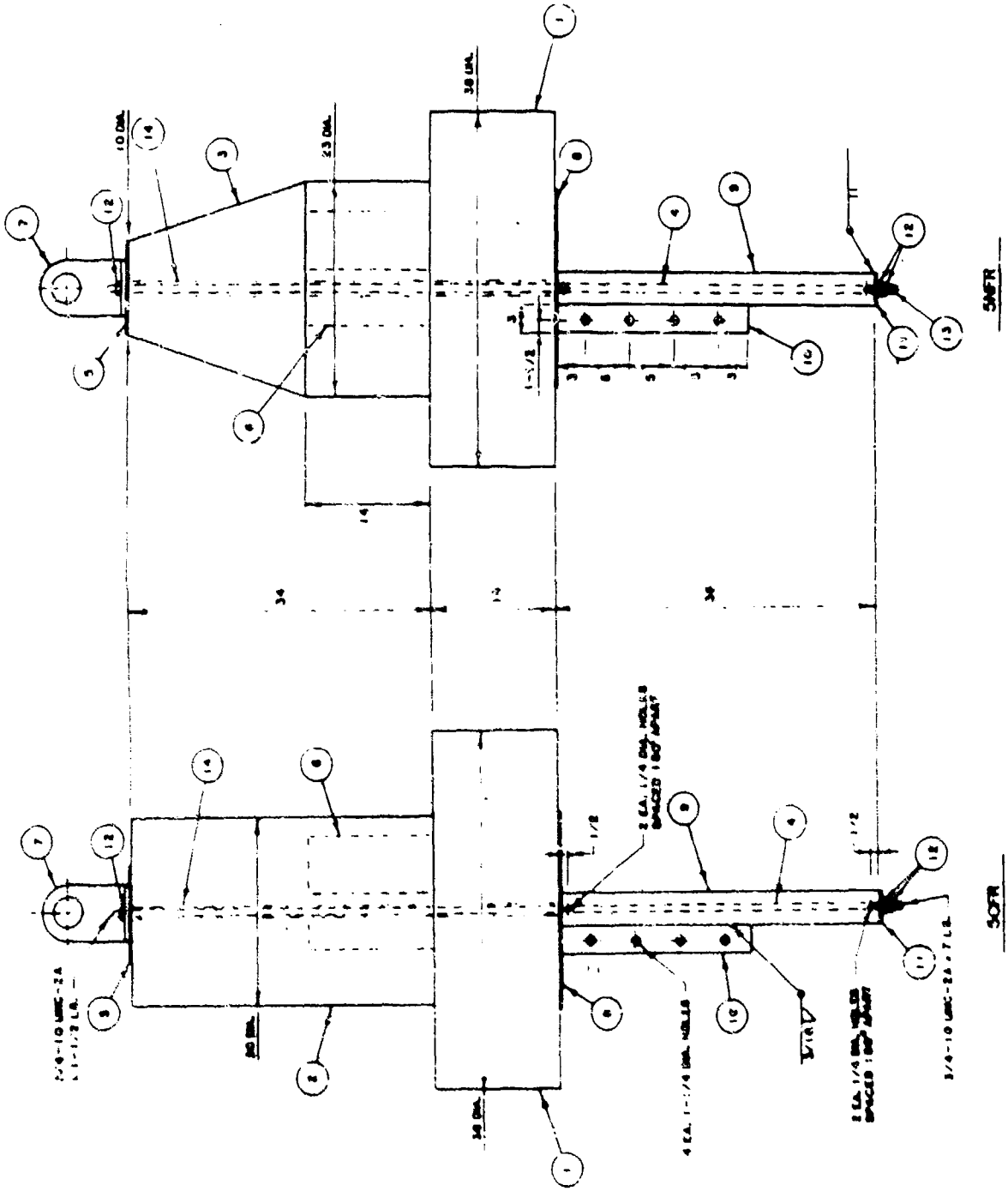

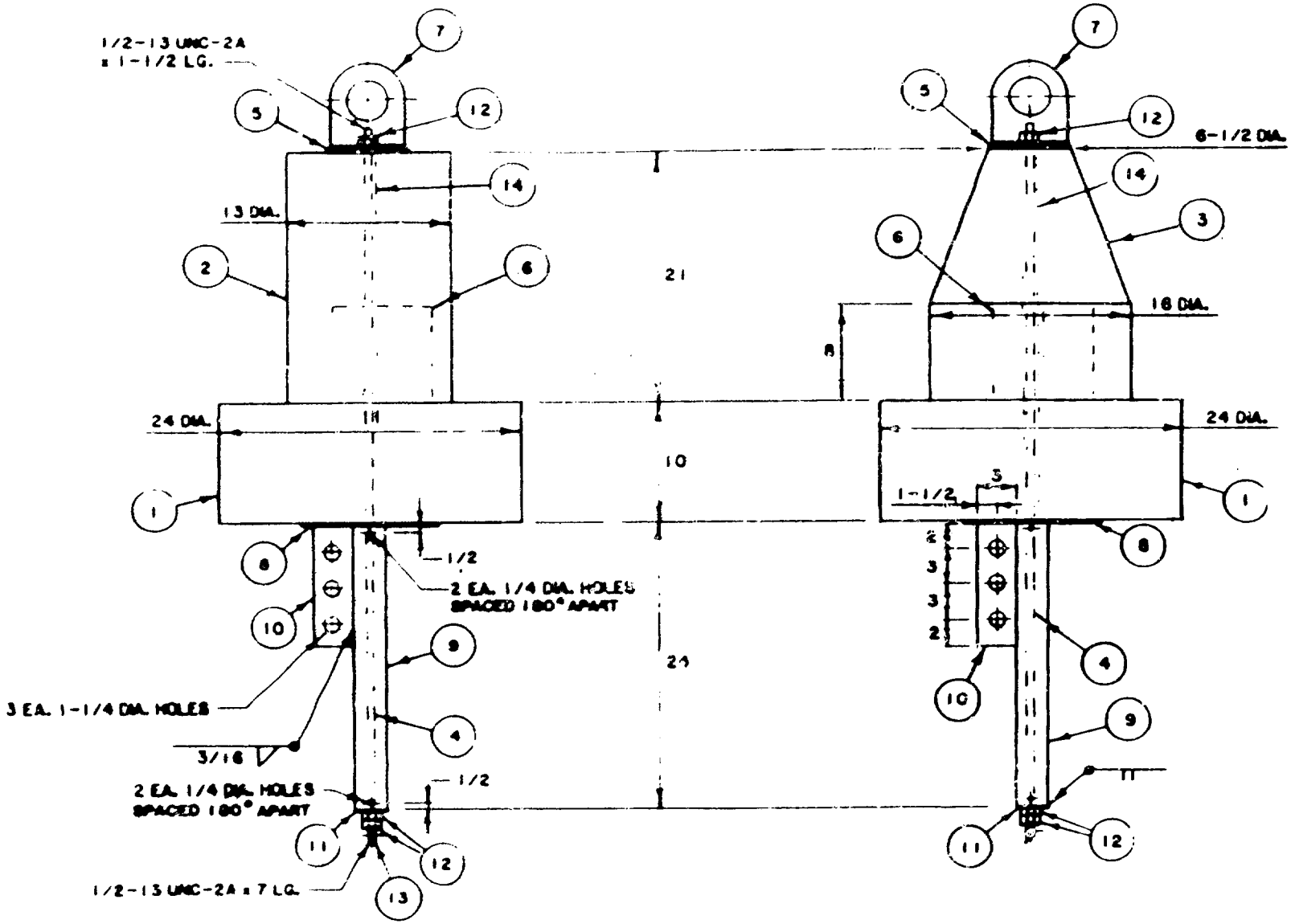
1/2-13 UNC-2A
x 1-1/2 LG.
13 DIA.
24 DIA.
21
10
24
1/2
2 EA. 1/4 DIA. HOLES
SPACED 180° APART
3 EA. 1-1/4 DIA. HOLES
3/16
2 EA. 1/4 DIA. HOLES
SPACED 180° APART
1/2
1/2-13 UNC-2A x 7 LG.
6-1/2 DIA.
18 DIA.
8
24 DIA.
1-1/2
3
2
3
3
2

6CFR

6NFR

SB-826 Sentinel™ Series C

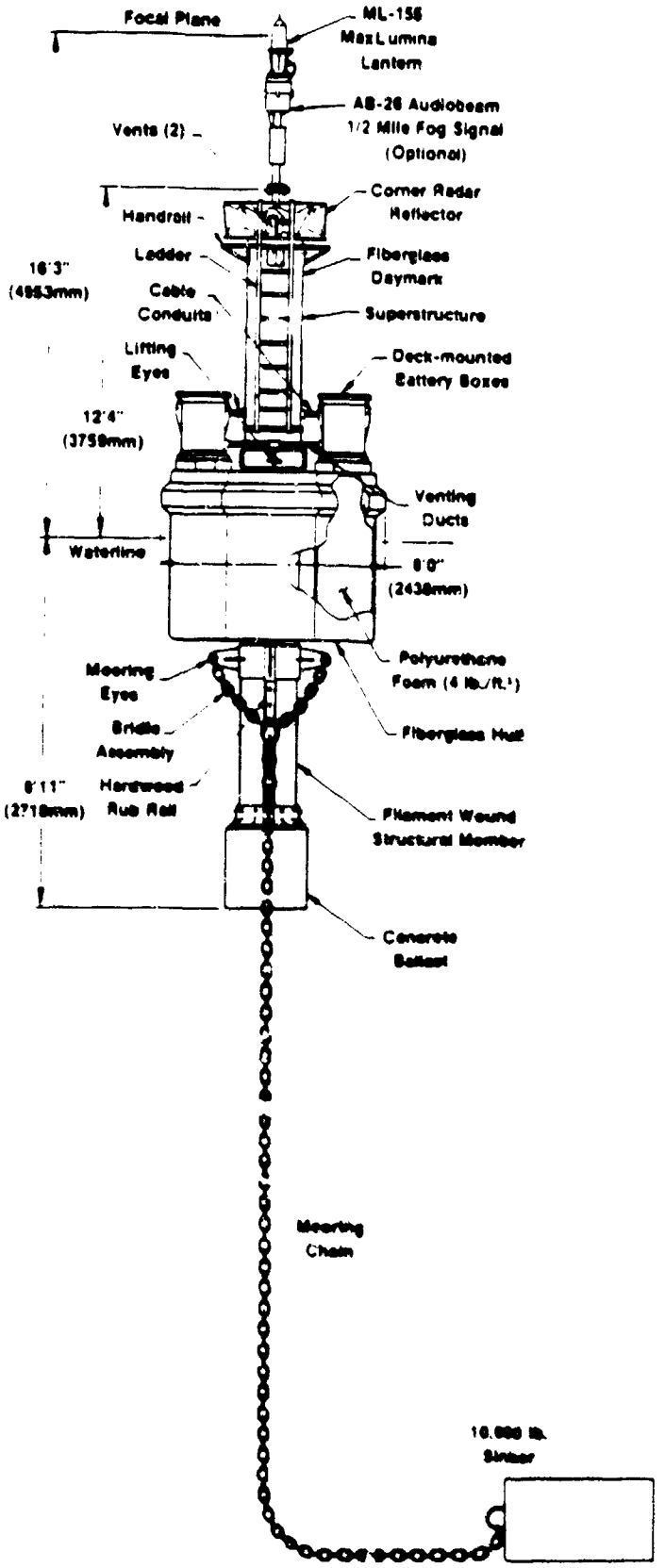

SB-612 Sentinel™

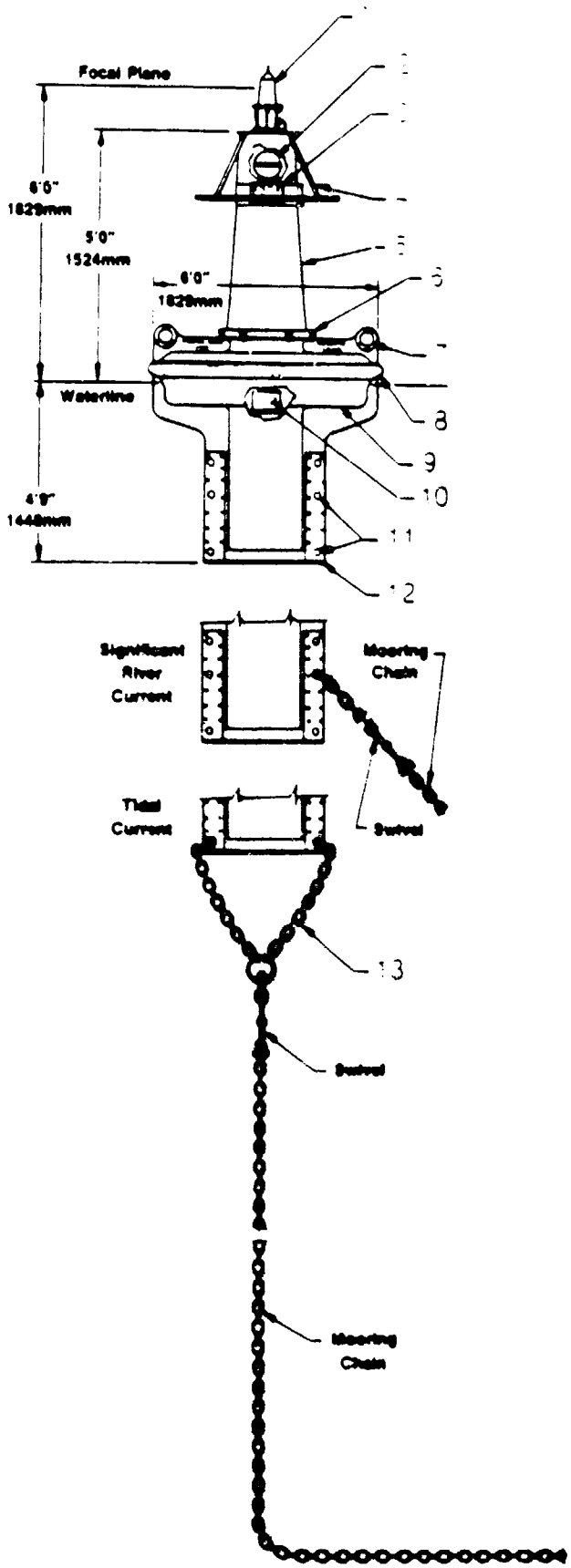

SB-510 Sentinel

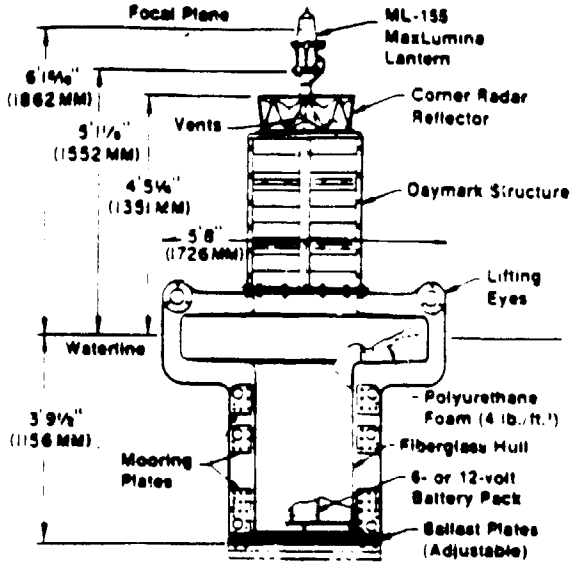

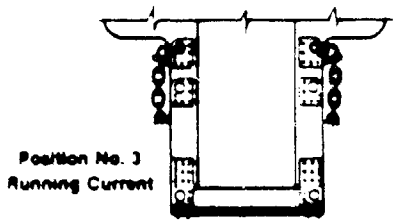

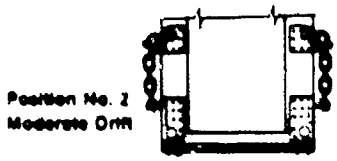

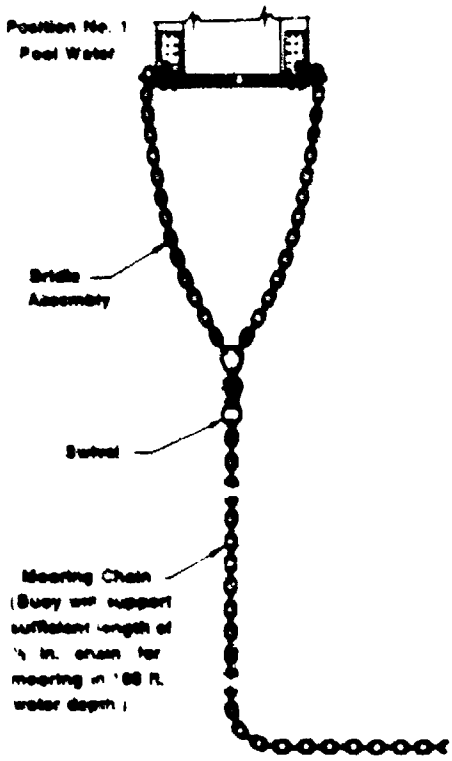

SB-138 Sentinel™ Navigational Buoy

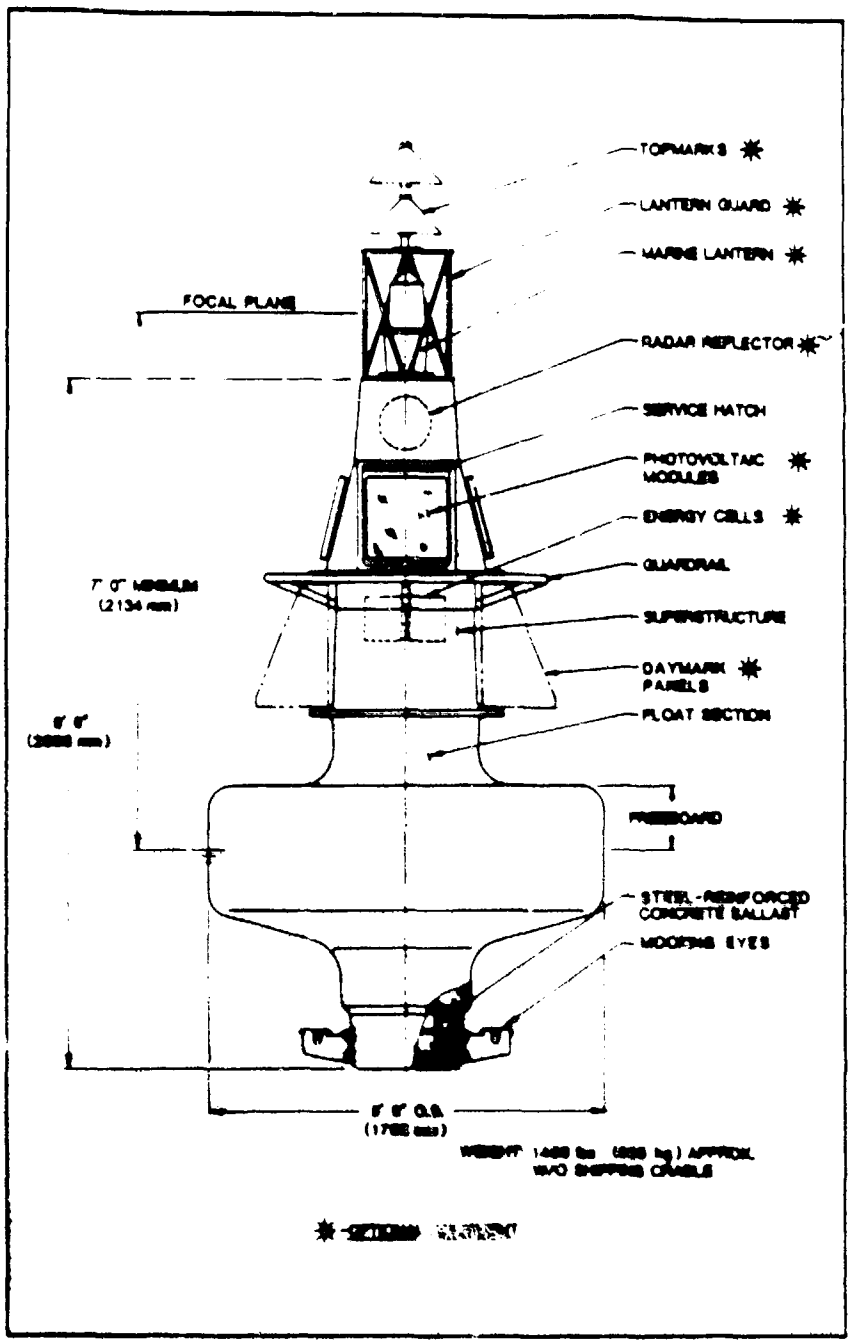

NAVIGATION BUOY SB2M

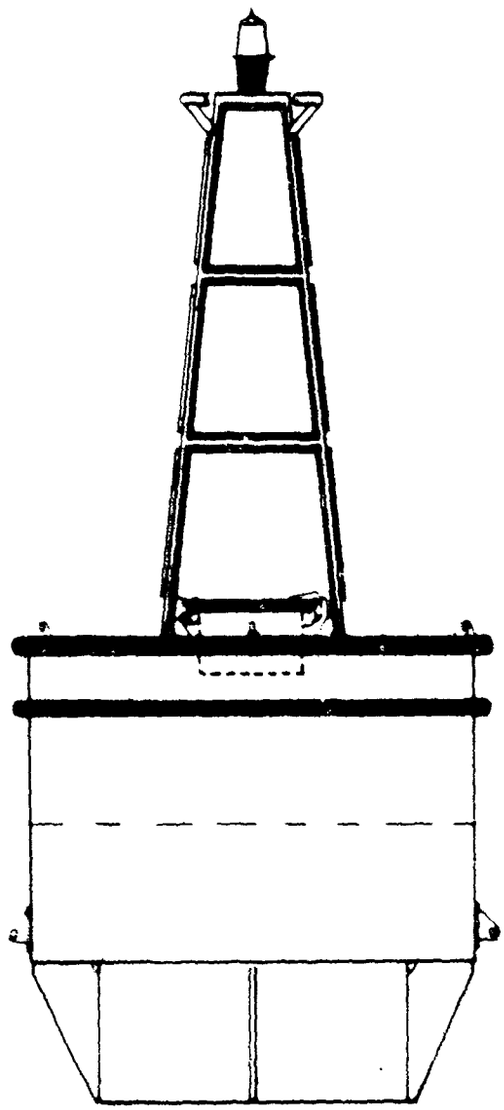

C-280

U.S.A. MFG. - 1-5

NAVIGATION BUOY SB2.5M

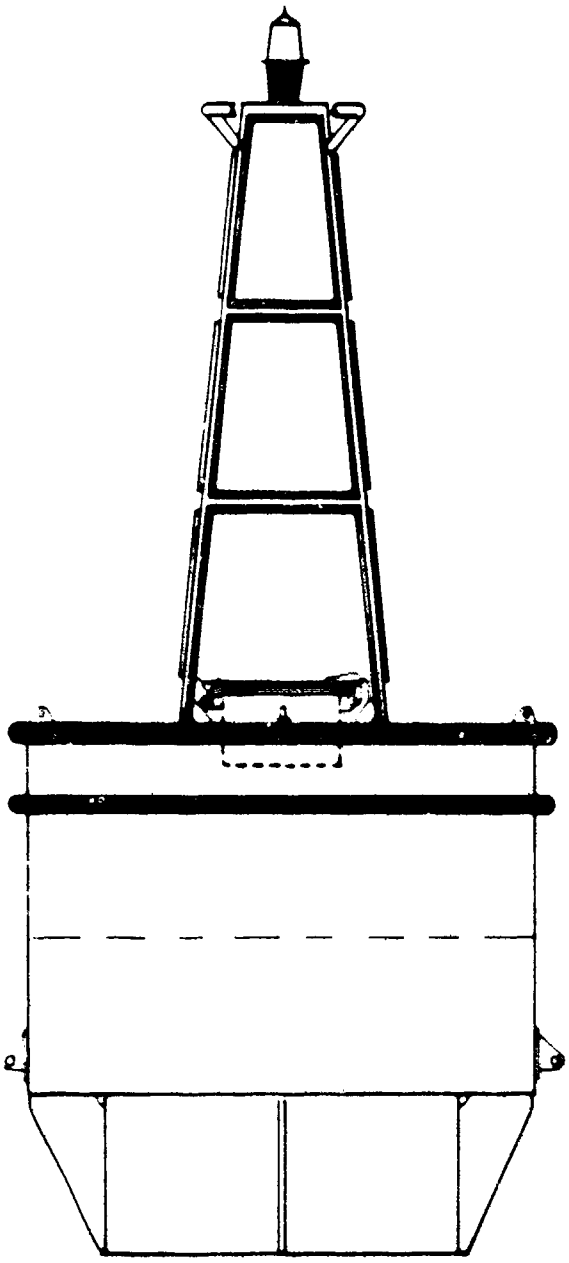

U.S.A. MFG. 1-6

NAVIGATION BUOY SB3M

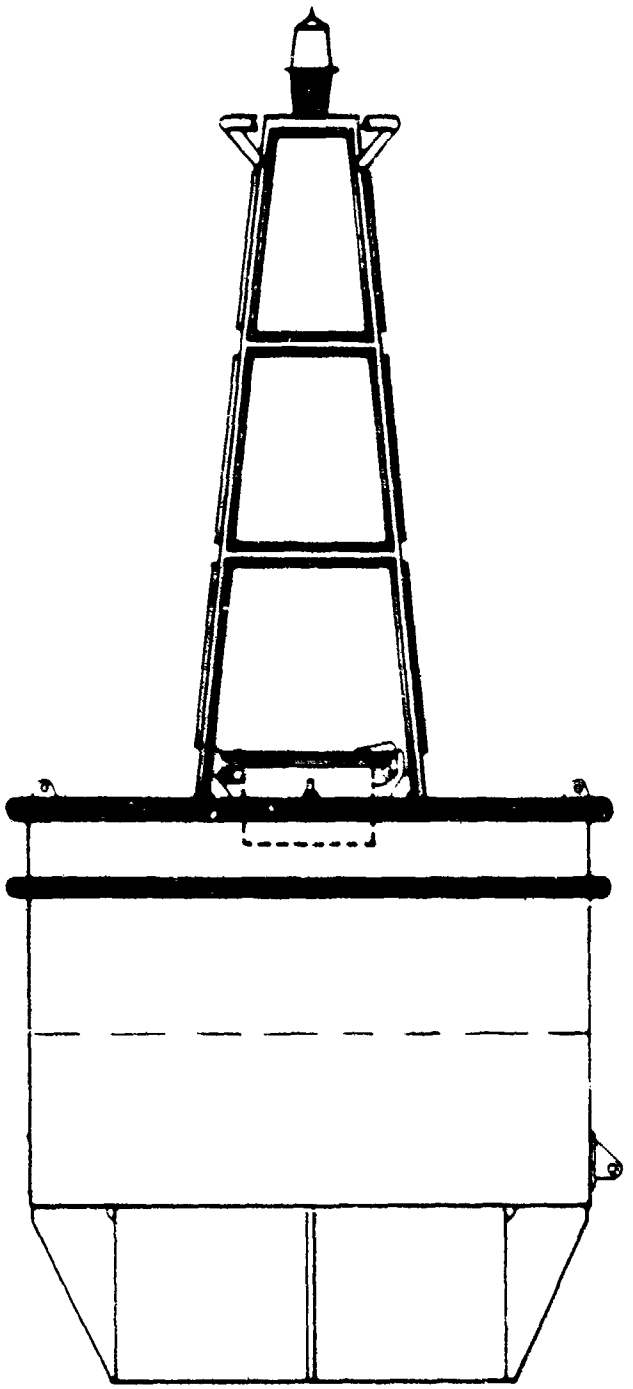

NAVIGATION BUOY SB1M

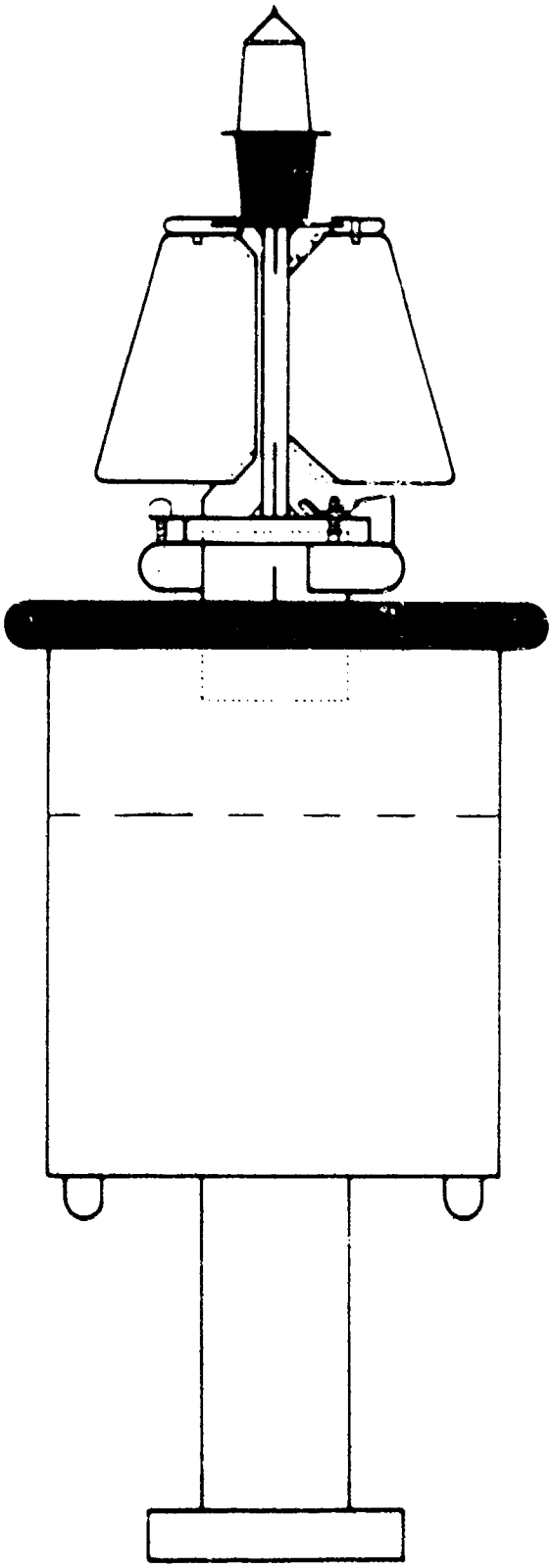

SMB-12 Sentinel™ Articulated Buoy

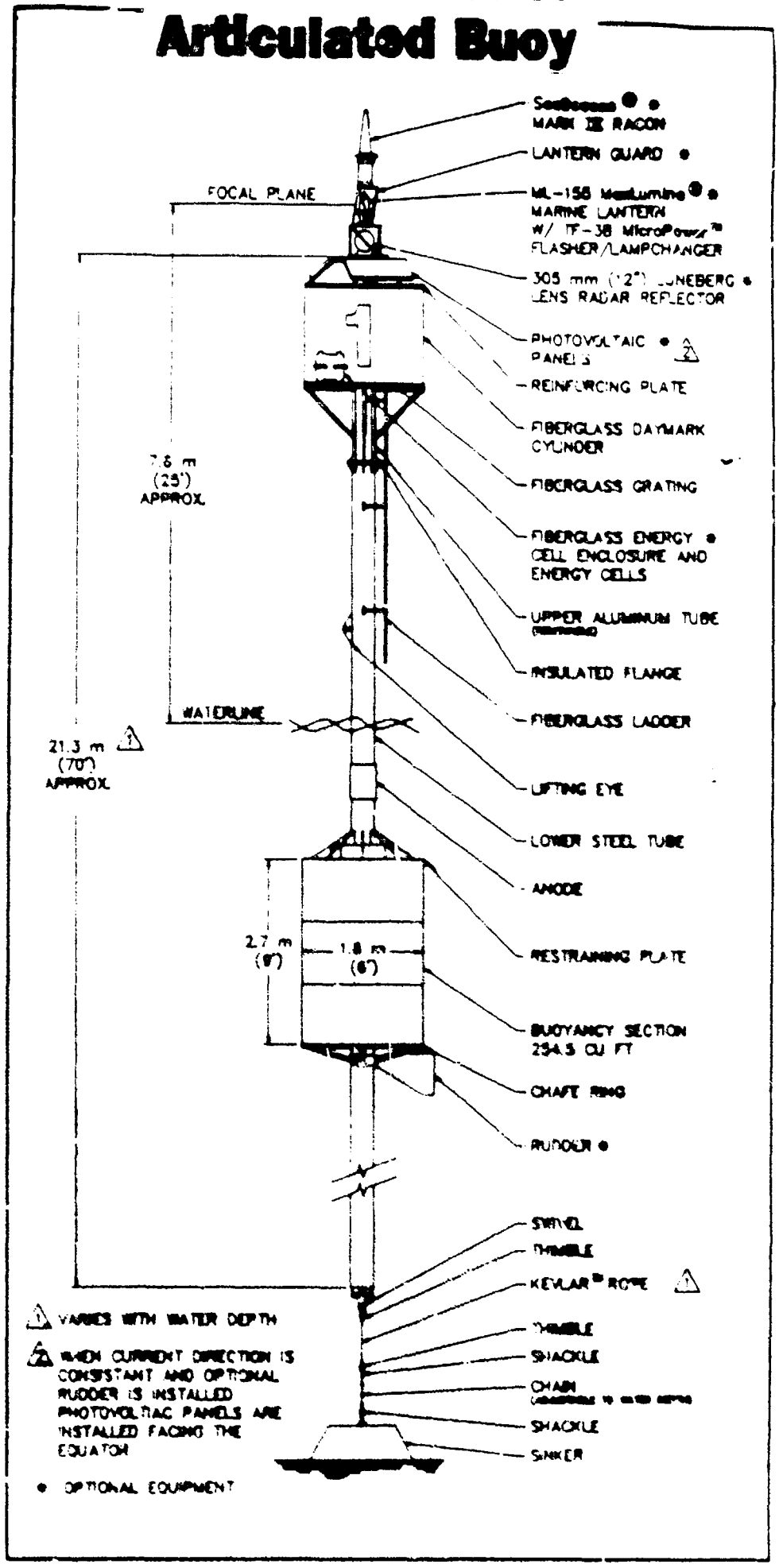

U.S.A. MFG. 1-9

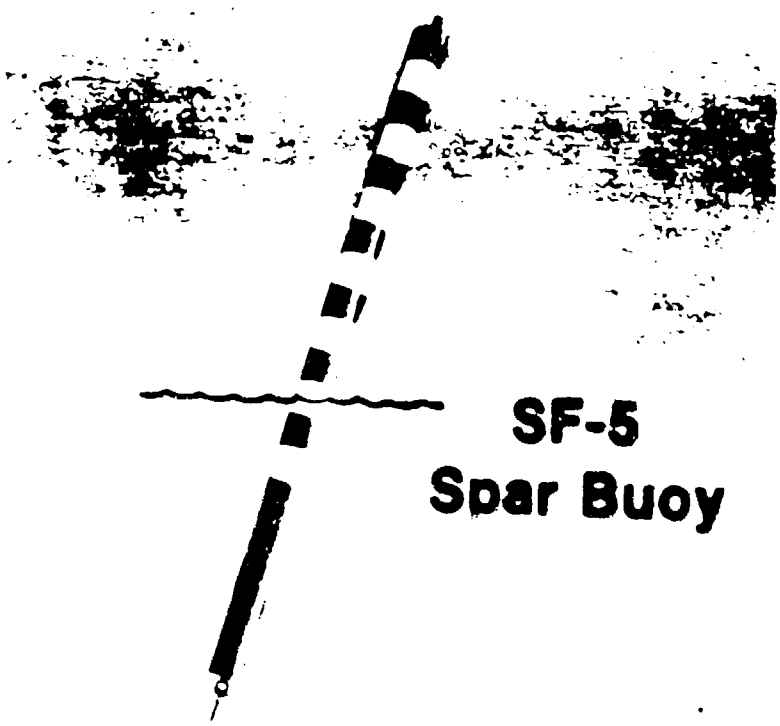
SF-5
Spar Buoy

UF-210
Sphere Buoy

U.S.A. MFG. 1-11

THIS PAGE INTENTIONALLY LEFT BLANK

Buoys

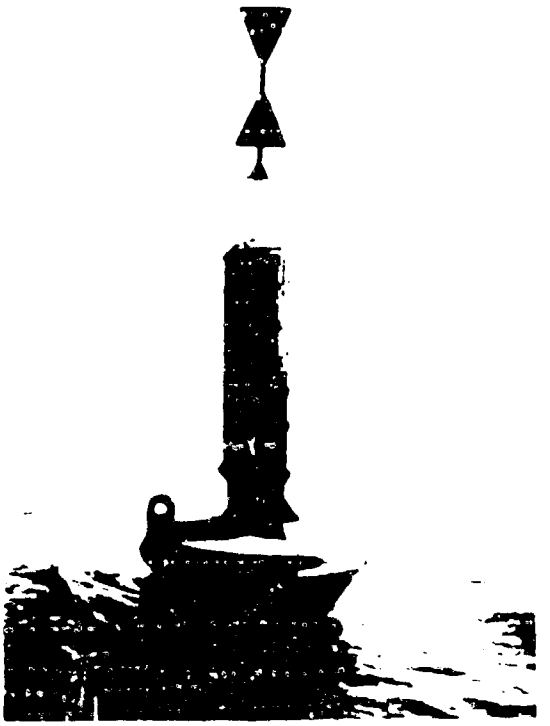

AUTOMATIC POWER, INC.

C-208 Modifications Reserved Without Prior Notice

Post Office Box [illegible] • Houston Texas [illegible] • [illegible] 228-5208 Telex [illegible] • Fax [illegible]

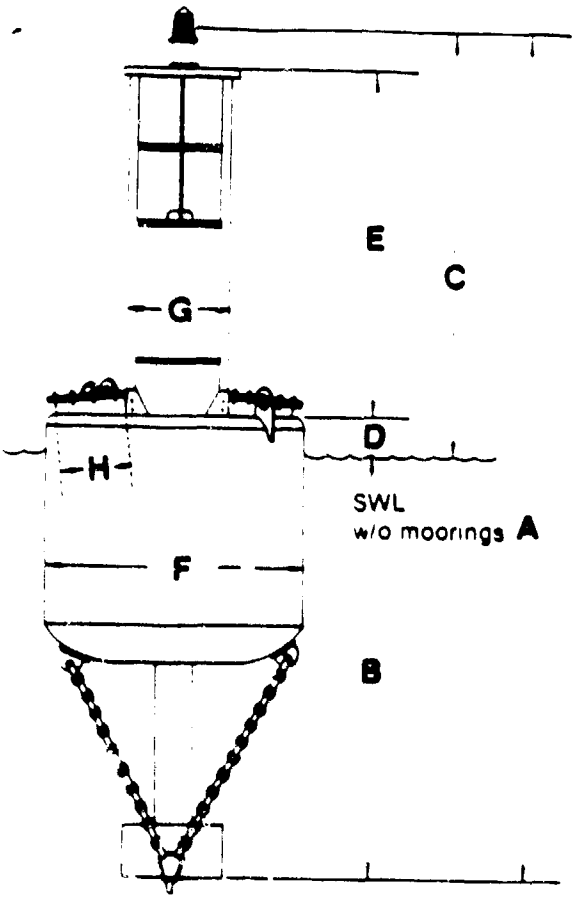

Specifications	BL-420	BL-826
Dimensions		
A	19'7"	26'0"
B	9'2"	10'11"
C	10'5"	15'1"
D	2'0"	2'5"
E	7'6"	11'8"
F	8'0"	8'0"
G	2'4"	3'6"
H	1'10"	2'0"

BL-717

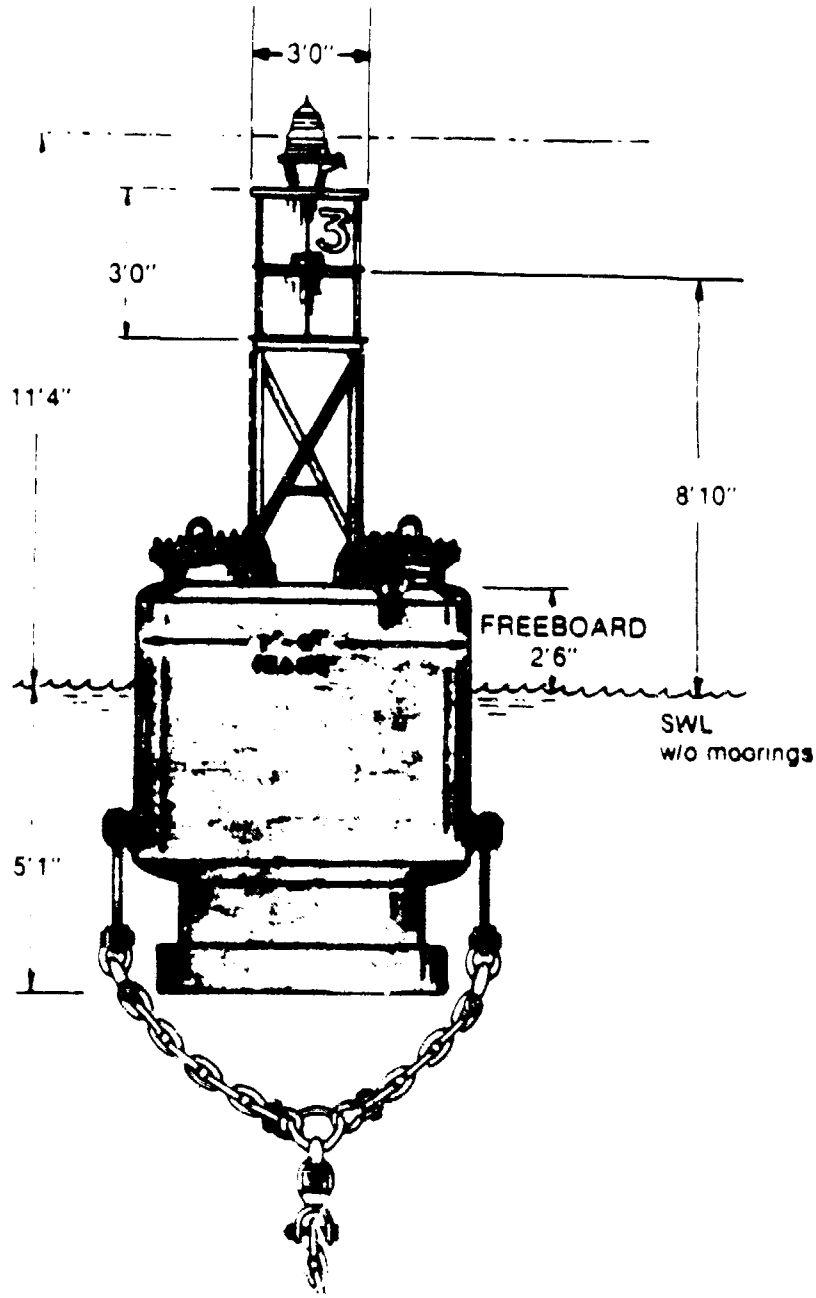

BL-511

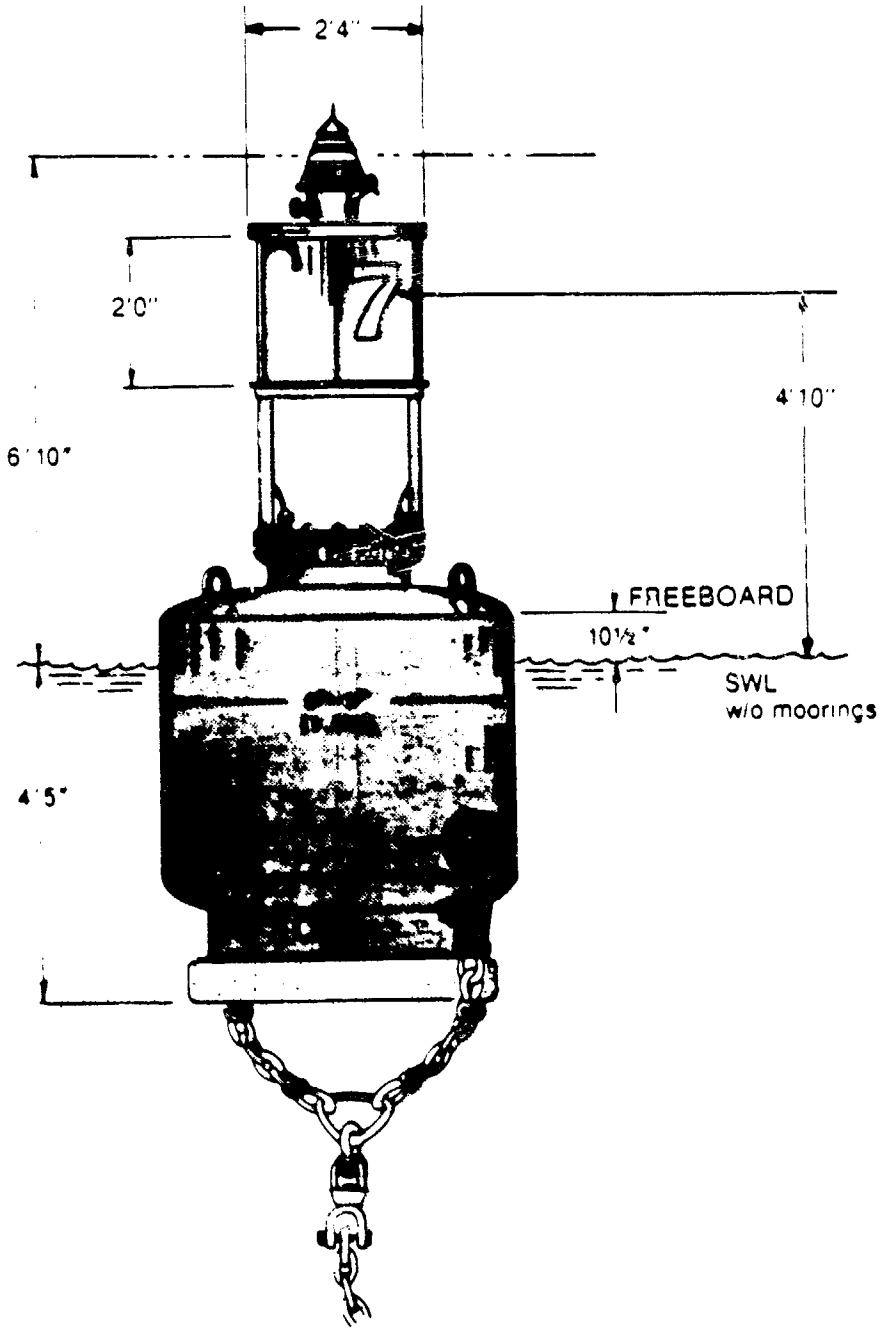

BL-358

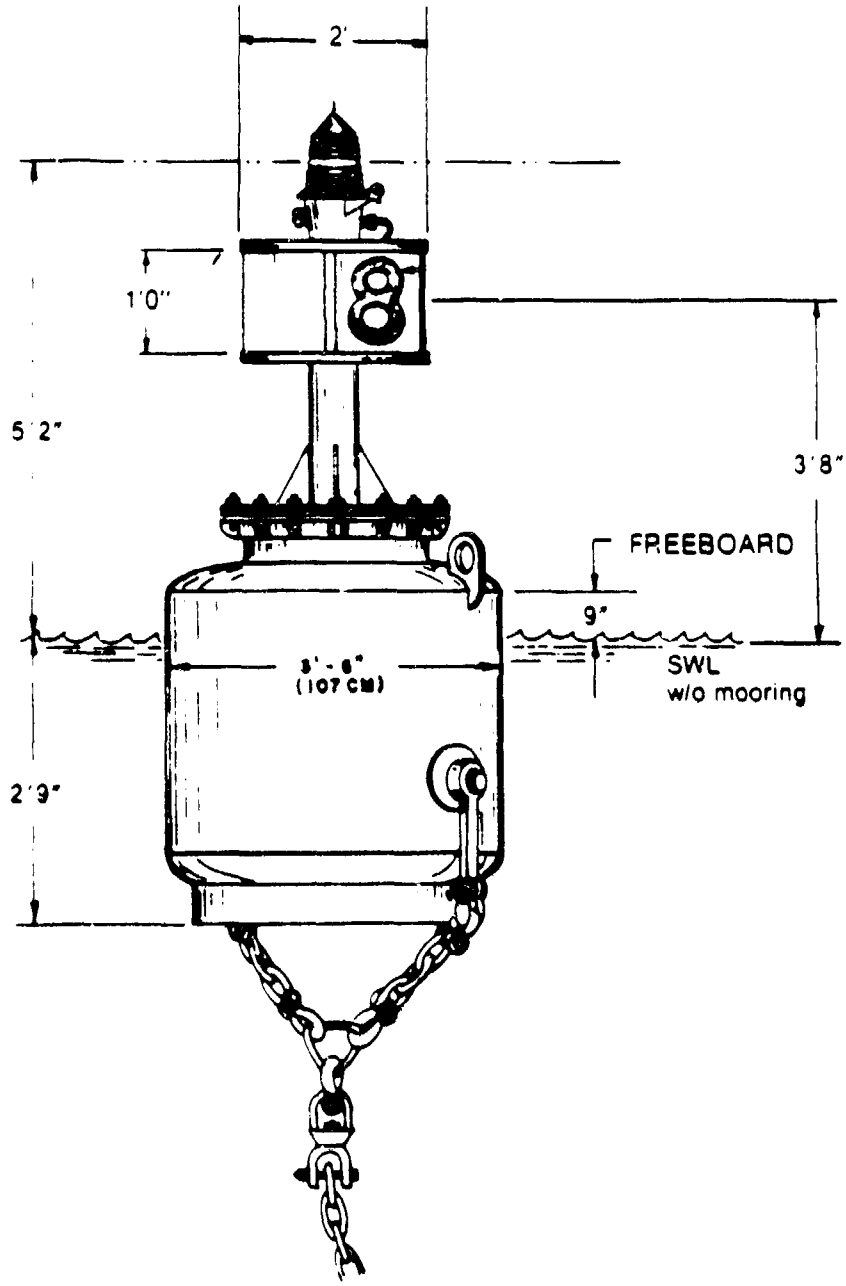

BL-250

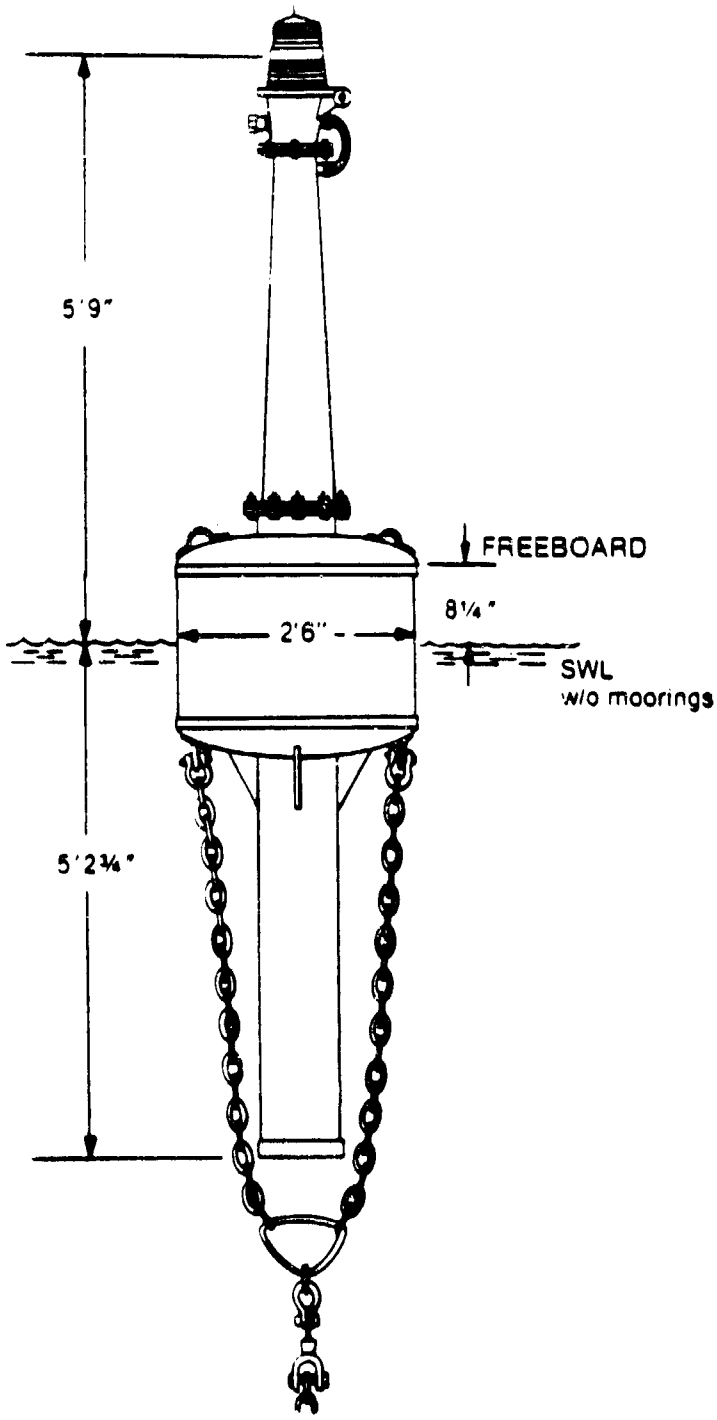

U.S.A. MFG. 2-6

Unlighted Steel Buoys
Can Type

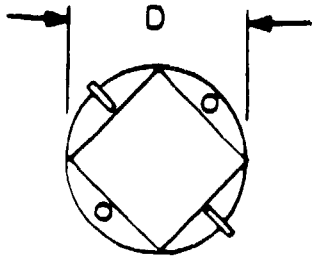

Buoy Classification
BC-3 — Third Class
BC-4 — Second Class
BC-5 — First Class

Specifications:	BC-3	BC-4	BC-5
Dimensions:			
A	8'0"	13'6"	18'3'
B	3'9"	6'0"	7'9"
C	4'3"	7'6"	10'6"
D	3'0"	4'0"	5'0"
Recommended Moorings			
Anchor, concrete	3,000 lbs.	4,000 lbs.	5,000 lbs.
Chain	¾"	1⅛"	1⅛"
Body Material	Steel	Steel	Steel
Day Mark	12¾ ft.²	30 ft²	52½ ft.²
Buoys can be filled with buoyant foam			
Weight less moorings	875 lbs.	2,565 lbs.	5,150 lbs.
Reserve buoyancy	1,254 lbs.	3,216 lbs.	7,560 lbs.
Pounds/inch Immersion	38 lbs./in.	67 lbs./in.	105 lbs./in.
Freeboard (to top of can)	33"	48"	72"

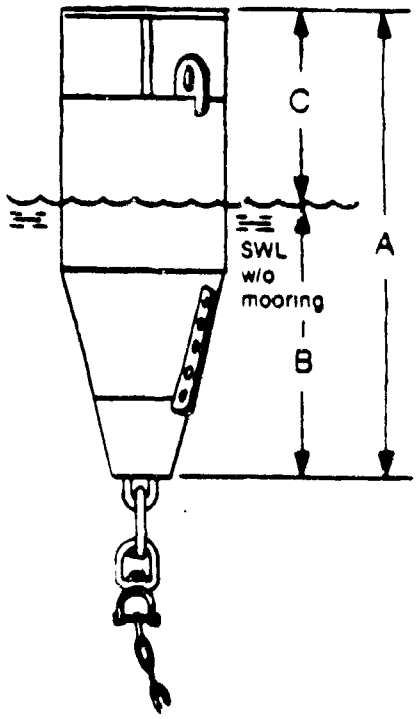

Unlighted Steel Buoys
Nun Type

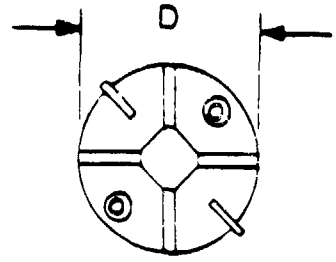

Buoy Classification
BN-3 — Third Class
BN-4 — Second Class
BN-5 — First Class

Specifications:	BN-3	BN-4	BN-5
Dimensions:			
A	9'0"	14'6"	19'9"
B	3'9"	5'11"	7'6½"
C	5'3"	8'7"	12'2½"
D	3'0"	4'0"	5'0"
Recommended Moorings			
Anchor, concrete	3,000 lbs.	4,000 lbs.	5,000 lbs.
Chain	¾"	1⅛"	1⅛"
Body Material	Steel	Steel	Steel
Day Mark	13.25 ft.³	27½ ft³	49 ft.³
Buoys can be filled with buoyant foam			
Weight less moorings	865 lbs.	2,465 lbs.	4,875 lbs.
Reserve buoyancy	1,254 lbs.	3,283 lbs.	7,822 lbs
Pounds/inch immersion	38 lbs./in.	67 lbs./in.	105 lbs./in.
Freeboard (to top of can)	33"	49"	74½"

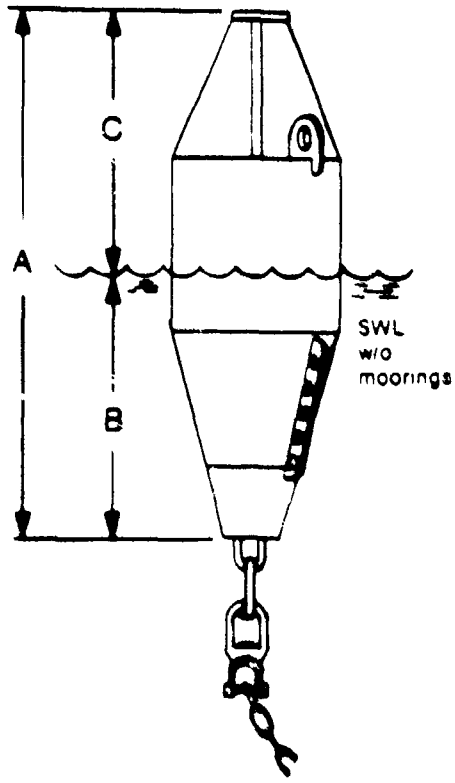

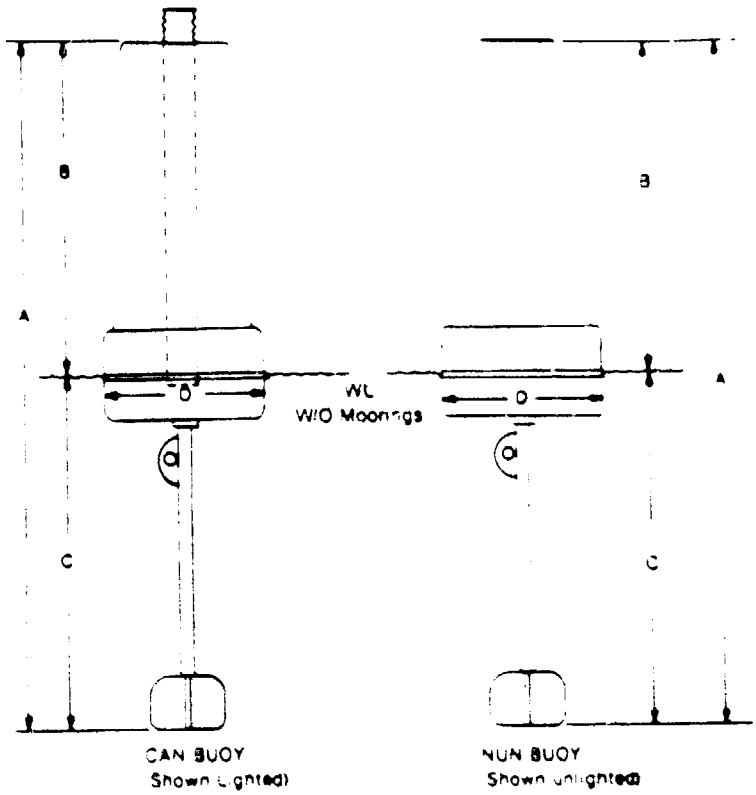

Can Buoys

	BA-323C	BA-17C	BA-28C
Dimensions			
A	66"	80½"	88"
B	36"	38¼"	44"
C	30"	42¼"	44"
D	20"	20"	28"

Nun Buoys

Specifications	BA-323N	BA-17N	BA-28N
Dimensions			
A	66"	86½"	92"
B	36"	44½"	48"
C	30"	42"	44"
D	20"	20"	28"

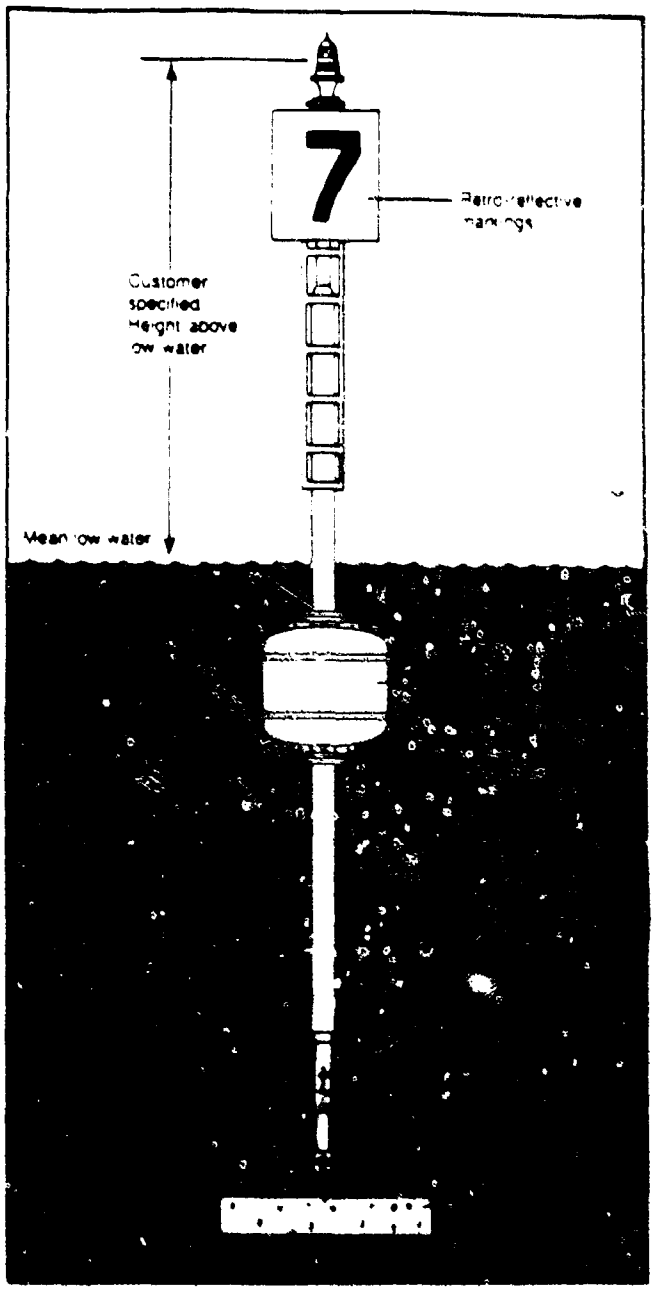
7
Customer
specified
Height above
ow water
Mean ow water

GILMAN SOFTLITE 5CFLR

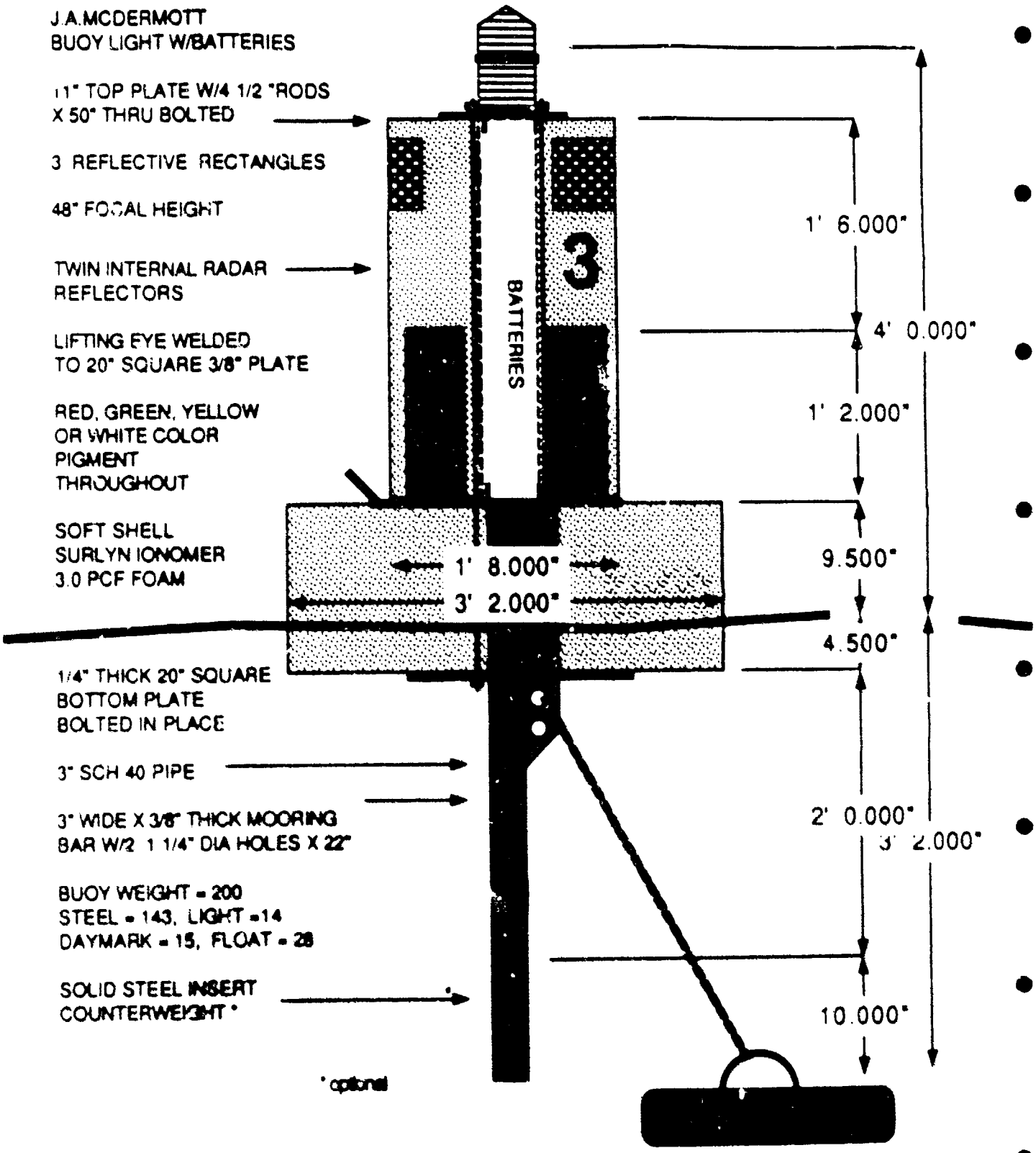

U.S.A. MFG. 3-1

THIS PAGE INTENTIONALLY LEFT BLANK

"We tame the tough ones"

FLOATATION DEVICES CATALOG

URETHANE TECHNOLOGIES, Inc.

P. O. Box 616 • Port Allen, Louisiana 70767

Telephone: (504) 346-8780

FAX: (504) 346-0104

An Affiliate of Lining Technologies, Inc

C-300

MOORING/MARKER BUOYS - MBP SERIES

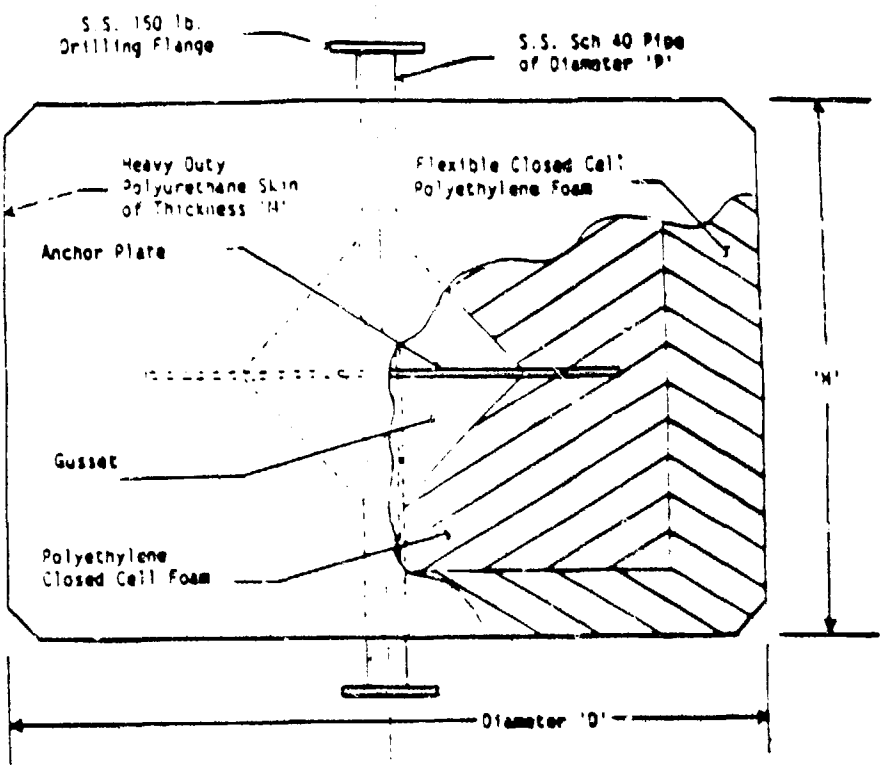

Model Number	Diameter 'D'	Height 'H'	Pipe & Flange Size 'P'	Overall Height	Approx. Weight	Approx. Net Buoyancy
MBP24	24"	16"	1"	22"	40#	215#
MBP36	36"	24"	1½"	30"	115#	750#
MBP48	48"	32"	2"	39"	220#	1,825#
MBP60	60"	40"	3"	48"	410#	3,575#
MBP72	72"	48"	4"	57"	650#	6,250#
MBP96	96"	60"	6"	70"	1,225#	14,100#
MBP96X*	96"	96"	8"	108"	2,205#	22,500#

*Two Anchor Plates in a MBP96X.

REEF MARKER BUOYS - RM SERIES

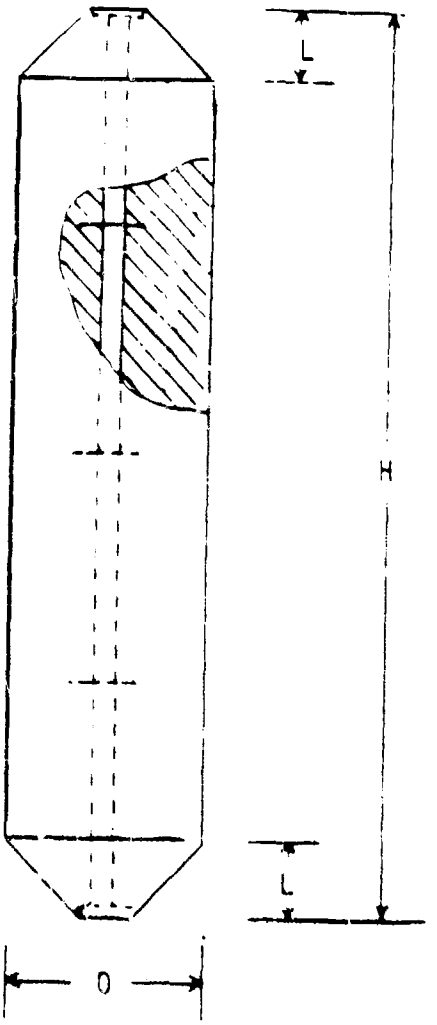

Model Number	Diameter 'D'	Height 'H'	Peg Length 'L'	Pipe and Flange Size	Skin Thickness	Approximate Net Wt.	Approximate Net Buoyancy
RM-12	12"	4'-6"	4"	3/4"	80 mil	25 lbs.	180 lbs.
RM-18	18"	6'-9"	7"	1"	125 mil	80 lbs.	605 lbs.
RM-24	24"	9'-0"	9"	2"	140 mil	180 lbs.	1450 lbs.
RM-30	30"	11'-3"	11½"	3"	160 mil	350 lbs.	2830 lbs.

MARKER BUOYS - CM SERIES

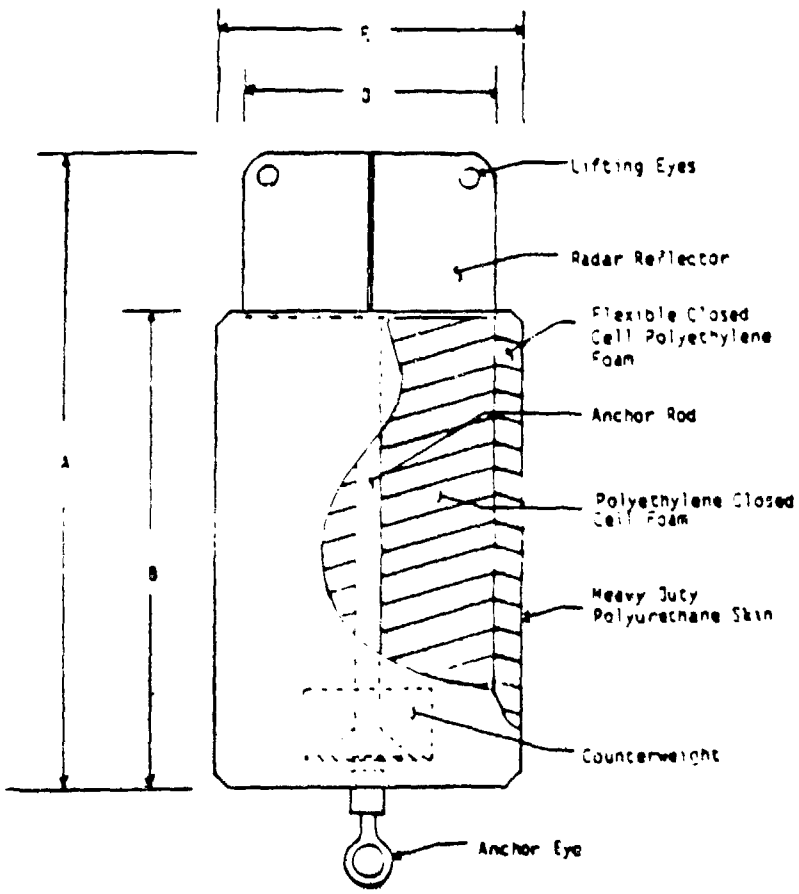

Item Number	'D' Diameter	'E' Diameter	'A' Height	'B' Height	Approx. Net Buoyancy	Approx. Weight
CM12	12"	10"	24"	18"	51 lbs.	22 lbs.
CM18	18"	15"	36"	27"	181 lbs.	67 lbs.
CM24	24"	20"	48"	36"	449 lbs.	139 lbs.
CM30	30"	26"	60"	45"	858 lbs.	290 lbs.

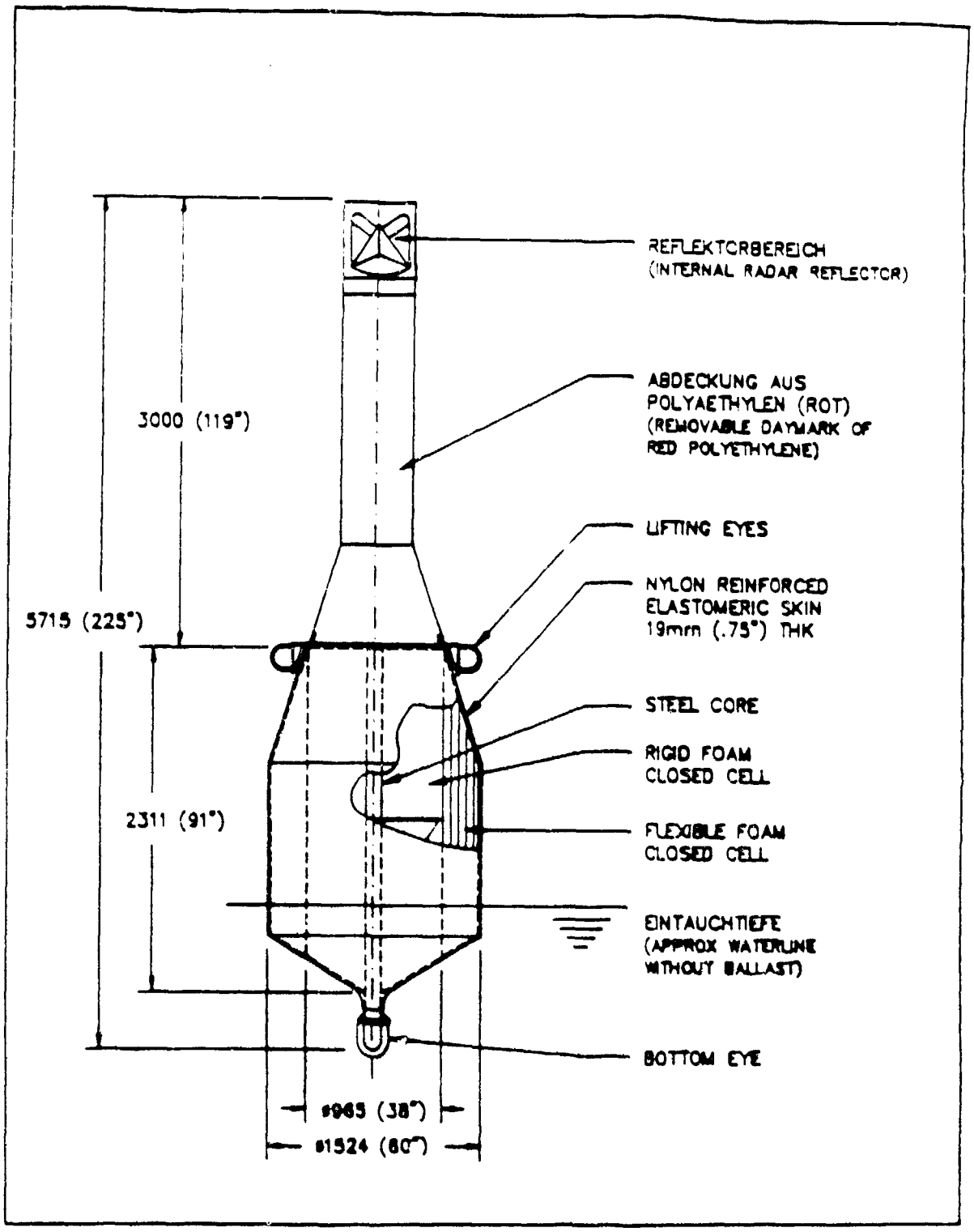
REFLEKTORBEREICH
(INTERNAL RADAR REFLECTOR)
ABDECKUNG AUS
POLYAETHYLEN (ROT)
(REMOVABLE DAYMARK OF
RED POLYETHYLENE)
LIFTING EYES
NYLON REINFORCED
ELASTOMERIC SKIN
19mm (.75") THK
STEEL CORE
RIGID FOAM
CLOSED CELL
FLEXIBLE FOAM
CLOSED CELL
EINTAUCHTIEFE
(APPROX WATERLINE
WITHOUT BALLAST)
BOTTOM EYE
3000 (119")
5715 (225")
2311 (91")
ø965 (38")
ø1524 (60")

USA MFG 5-1