20030220213

AD-A244 010

Report No. AMXTH-TE-CR-88016
Final Report

USATHAMA

U.S. Army Toxic and Hazardous Materials Agency

LABORATORY-SCALE SOIL WASHING TEST ON ROCKY MOUNTAIN ARSENAL BASIN F MATERIAL

(TASK ORDER NO. 8)

August 1988
Contract No. DAAK11-85-D-0008

Prepared by:

Arthur D. Little, Inc.
Acorn Park
Cambridge, Massachusetts 02140-2390

and

MTA Remedial Resources, Inc.
Golden, Colorado 80401

Prepared for:

U.S. Army Toxic and Hazardous Materials Agency
Process Development Branch
Aberdeen Proving Ground, MD 21010-5401

DISTRIBUTION UNLIMITED

DTIC

The views, opinions, and/or findings contained in this report should not be construed as an official Department of the Army position, policy, or decision, unless so designated by other documentation.

The use of trade names in this report does not constitute an official endorsement or approval of the use of such commercial products. This report may not be cited for purposes of advertisement.

Final Report to
United States Army Toxic and Hazardous Materials Agency
August 1988

Laboratory-Scale Soil Washing Test on Rocky Mountain Arsenal Basin F Material

(Task Order Number 8)

Final Report

A.A. Balasco
Program Manager

J.I. Stevens — Task Leader
J.W. Adams
D.L. Cerundolo
S. Rickard (MTA Remedial Resources)
P.B. Trost (MTA Remedial Resources)
Principal Investigators

Distribution Unlimited

Arthur D. Little, Inc.
Contract No. DAAK11-85-D-0008
Reference 54148
USATHAMA Reference AMXTH-TE-CR-88016

91-18796

UNCLASSIFIED
SECURITY CLASSIFICATION OF THIS PAGE

REPORT DOCUMENTATION PAGE

1a. REPORT SECURITY CLASSIFICATION UNCLASSIFIED	1b. RESTRICTIVE MARKINGS
2a. SECURITY CLASSIFICATION AUTHORITY 2b. DECLASSIFICATION / DOWNGRADING SCHEDULE	3. DISTRIBUTION / AVAILABILITY OF REPORT Unlimited
4. PERFORMING ORGANIZATION REPORT NUMBER(S) Reference: 54148	5. MONITORING ORGANIZATION REPORT NUMBER(S) AMXTH-TE-CR-88016
6a. NAME OF PERFORMING ORGANIZATION Arthur D. Little, Inc. 6b. OFFICE SYMBOL (If applicable)	7a. NAME OF MONITORING ORGANIZATION U.S. Army Toxic and Hazardous Materials Agency
6c. ADDRESS (City, State, and ZIP Code) Acorn Park Cambridge, Massachusetts 02140-2390	7b. ADDRESS (City, State, and ZIP Code) Attn: CETH-TE-D Aberdeen Proving Ground, Maryland 21010-5401
8a. NAME OF FUNDING / SPONSORING ORGANIZATION U.S. Army Toxic & Hazardous Materials Agency 8b. OFFICE SYMBOL (If applicable) CETH-TE-D	9. PROCUREMENT INSTRUMENT IDENTIFICATION NUMBER Contract No. DAAK11-85-D-0008 Task Order No. 8
8c. ADDRESS (City, State, and ZIP Code) Attn: CETH-TE-D Aberdeen Proving Ground, Maryland 21010-5401	10. SOURCE OF FUNDING NUMBERS PROGRAM ELEMENT NO. / PROJECT NO. / TASK NO. 8 / WORK UNIT ACCESSION NO.

11. TITLE (Include Security Classification)
Laboratory-Scale Soil Washing Test on Rocky Mountain Arsenal Basin F Material

12. PERSONAL AUTHOR(S) A.A. Balasco, J.I. Stevens, J.W. Adams, D.L. Cerundolo, S. Rickard and P.B. Trost

13a. TYPE OF REPORT	13b. TIME COVERED	14. DATE OF REPORT (Year, Month, Day)	15. PAGE COUNT
Final	FROM 7/86 TO 12/88	31 August 1988	[illegible]

16. SUPPLEMENTARY NOTATION

17. COSATI CODES			18. SUBJECT TERMS (Continue on reverse if necessary and identify by block number)
FIELD	GROUP	SUB-GROUP	• Rocky Mountain Arsenal • Basin F • Soil Washing • Technology Evaluation • Technology Development/Testing • Soil Decontamination • Site Remediation

19. ABSTRACT (Continue on reverse if necessary and identify by block number) The U.S. Army Toxic and Hazardous Materials Agency (USATHAMA) under its program for Innovative Technology Development for Rocky Mountain Arsenal (RMA) issued Task Order No. 8 under Contract No. DAAK11-85-D-0008 to Arthur D. Little, Inc. to evaluate and rank innovative technologies for applicability in treating Basin F Materials at the Arsenal. As a result of that ranking (Final Report on Evaluation/Selection of Innovative Technologies for Testing with Basin F materials prepared by Arthur D. Little), soil washing was among the technologies chosen for laboratory-scale testing and MTA Remedial Resources, Inc. (MTARRI) was awarded a subcontract to perform the work.

To initiate the evaluation of the soil washing process, MTARRI designed and carried out a laboratory program to determine: the applicability of the process; and the conditions that would remove both the organic and inorganic contaminants from the Basin F materials to yield a clean soil that could be placed in a fill on-site. The process was then proven by a demonstration run, at the bench-scale, with Arthur D. Little personnel observing and

20. DISTRIBUTION / AVAILABILITY OF ABSTRACT ☒ UNCLASSIFIED/UNLIMITED ☐ SAME AS RPT ☐ DTIC USERS	21. ABSTRACT SECURITY CLASSIFICATION UNCLASSIFIED
22a. NAME OF RESPONSIBLE INDIVIDUAL Craig W. MacPhee	22b. TELEPHONE (Include Area Code) (301) 671-2054 22c. OFFICE SYMBOL CETH-TE-D

DD FORM 1473, 84 MAR 83 APR edition may be used until exhausted. All other editions are obsolete

SECURITY CLASSIFICATION OF THIS PAGE
UNCLASSIFIED

sampling the demonstration run product streams. Using the laboratory and demonstration run data, a process flowsheet and material balance was produced for a plant to treat approximately 950 tons per day of contaminated Basin F material.

Laboratory Development Program - MTARRI had previously shown that the soil washing process could remove organics and inorganics from soils; however, no work had been done with a material having the particular contaminants contained in Basin F. Therefore, a laboratory development program was required to establish the necessary physical and chemical conditions that would remove these contaminants from the Basin F material.

At the time the scope of work for this program was developed, there were no guidelines available on the degree of contaminant removal that the soil wash should achieve. Therefore, the laboratory program's objectives were to: develop a process to remove as much as possible of all the contaminants (both organic and inorganic); establish the technical feasibility of the process; and determine the operating parameters within some ranges. Therefore, the laboratory's sope of work was limited to process development.

The results of the laboratory development program established a process that can eliminate the majority of the aldrin, and presumably the other organic contaminants of concern. To accomplish this removal, an organic prewash of an aqueous slurry of Basin F material is needed prior to the flotation.

During the laboratory test work no unusual problems or conditions were evident that would cause difficulties when the process is applied on a large scale. Overall, the laboratory program was successful in developing a process to clean up Basin F material. It now only remains to demonstrate this when the conditions established, from the prior test work, are employed in a test run continuously from start to finish. The acid wash section that was initially assumed not to need testing is also a part of this complete demonstration run.

As part of MTARRI's task, a laboratory demonstration run of the process developed during the laboratory test program phase was carried out. Arthur D. Little personnel observed the demonstration run and were responsible for the collection of samples and their analysis. Data generated during the demonstration run were used as the basis for developing the process flowsheet and material balance. Sample collection and analysis by Arthur D. Little was to be detailed, in that major compounds of concern were to be tracked, as far as practicable, throughout the entire process. Analytical methods used were approved and certified by USATHAMA.

In addition, the sampling and analytical program was performed to obtain sufficient data to confirm certain aspects of the process that had not been studied extensively during the laboratory development program. For example, the number of stages in the organic wash section and organic flow requirement were to be evaluated from the demonstration run data; as was the need for a final acid wash of the Basin F material.

At the time this program was developed, there were no guidelines available on the degree of contaminant removal that the soil washing process should achieve. Therefore, our objective was to remove as much as possible of all the organic and inorganic contaminants. This caused us to use a more extensive process during the demonstration run than was necessary based upon the data subsequently obtained from the demonstration run. Therefore, the soil washing process for the full-scale treatment of Basin F material has fewer unit operations than were employed in the demonstration run. It has been assumed that if the clean washed Basin F material meets the criteria set forth in the EPA's proposed toxic characteristic leaching procedure (TCLP), we would have achieved the required goal of contaminant removal.

Overall, the demonstration run showed that soil washing of Basin F material can eliminate the contaminants, both organic and inorganic, and yield a final clean soil that passes or exceeds the proposed TCLP criteria set by the EPA.

During the demonstration run no problems were encountered that were insurmoutable or would make this a difficult process to implement on a large scale. The required equipment is currently manufactured so no new equipment design or development is required. Reagents used are all available in large quantities. (Continued on separate page)

Although some data was not obtained during the demonstration run and some problems with the calculated material balances were observed, these were resolved by the described assumptions and adjusting the mass flow and analysis. These adjustments were necessary so that material balances could be developed and equipment sized, but in no way detracts from the conclusion that this process will clean up Basin F material. In addition, analysis of the data from the demonstration run showed where some process simplifications could be made. These changes were incorporated into the full-scale process flowsheet.

Full-Scale Basin F Soil Washing Process - Using the data collected and numerous flowsheet/material balance studies, a processing plant was designed that will produce clean soil (as defined by the EPA's TCLP procedure) that can be returned to a fill on-site. This plant would employ equipment currently available and reagents that are readily available in large quantities.

The largest flow stream in the plant is about 800 gpm (slurry to the organic wash area) and the largest piece of equipment, other than tanks, are the four flotation cells at 1500 cu. ft. each.

Overall, a full-scale soil washing plant would be easy to operate, require a minimum of maintenance, and would have an above average on-line factor.

Instrumentation and control loops would be minimal. The major control would be tank levels.

The plant would be relatively safe to operate since neither high pressure or high temperatures are employed. The plant would be environmentally acceptable since it is temporary and all emissions, air, water, and soil would comply with current emission standards.

If in the final evaluation of innovative technology to clean up Basin F, soil washing continues to be a viable technology both from an environmental and cost standpoint, additional work is needed to finalize the process, engineer the plant and finalize the costs for the overall project. This additional work would be in three steps: laboratory studies, pilot plant demonstration, and engineering design.

Additional laboratory studies would consist of two parts. First, the process would be defined in detail. For example, can toluene be eliminated from the wash solvent, and is there a better solvent system that would make the distillation system more effective in eliminating the organic contaminants. Second, data for engineering design needs to be gathered to more accurately size the equipment. Such items needed are size distribution of the feed material to a detailed analysis of flotation variables for scale-up design.

Pilot/demonstration testing would be required since it would not be prudent to scale up the proposed process from laboratory bench-scale studies to the full-scale plant (950 tons per day). Therefore, a pilot/demonstration plant should be built and operated for two to four months. This small-scale plant (1000 lb/hr) would be built based upon additional detailed laboratory work which would fix the flowsheet so little or no equipment arrangement testing will be needed. Therefore, this would be more a demonstration plant with only limited testing on the effect of process water recirculation, distillation and quality of the clean soil produced. All data needed for scaling up to a full-scale plant will be obtained by a month's run at steady state conditions.

During the preceding two steps, the work should be subjected to engineering optimization as the data becomes available. This would require establishing an engineering team to assist in program design prior to the start of either phase of work. During the additional data collection the engineers could evaluate data and make recommendations for changes, new tests, additional data so that upon completion of the pilot/demonstration run there would be sufficient and complete data for the final and detailed engineering of the full-scale soil washing process plant.

This report was prepared by MTA Remedial Resources, Inc. for Arthur D. Little, Inc. in fulfillment of a requirement for Task Order Number 8 under Contract DAAK11-85-D-0008.

TABLE OF CONTENTS

	Page No.
SUMMARY	S-1
1. INTRODUCTION	1
1.1 Laboratory Development Program	1
1.2 Demonstration Run	2
1.3 Program Analysis and Engineering Design	3
2. DESCRIPTION OF TEST FACILITIES	4
2.1 Analytical Support	4
2.2 Health and Safety	4
2.2.1 Worker Protection	4
2.2.2 Environmental Protection	6
3. LABORATORY DEVELOPMENT PROGRAM PROCEDURES AND RESULTS	7
3.1 Introduction	7
3.2 Sample (Basin F Material)	8
3.3 Surfactant Scoping Tests	8
3.3.1 Results of Surfactant Scoping Tests	9
3.4 Flotation/Chemistry Variables Evaluation	9
3.4.1 Discussion of Results of Flotation Variables Evaluation	9
3.5 Basic Flotatior Process Modification Studies	12
3.5.1 Discussion of Results for Flotation Process Modification	14
3.6 Solvent Prewashing Process Evaluation	14
3.6.1 Solvent Prewash Test Procedure	14
3.6.2 Discussion of Results of Solvent Washing Evaluation	16
3.7 Summary and Conclusions of the Laboratory Development Program	17
4. DEMONSTRATION RUN	19
4.1 Introduction	19
4.2 Demonstration Run Procedure	20
4.2.1 Organic Wash Steps	20
4.2.2 Flotation Step	22
4.2.3 Acid Wash Steps	23
4.2.4 Demonstration Run Samples	23
4.2.5 Problems During Demonstration Run	24
4.3 Demonstration Run Product Analysis and Material Balance	24
4.3.1 Analytical Results	24
4.3.2 Material Balance Calculations	26
4.3.3 Discussion of Sampling, Analytical and Material Balance Results	29
4.4 Demonstration Run Data Adjustments	29
4.4.1 Assumptions Used to Adjust Data	29
4.4.2 Discussion of Adjusted Results	32
4.5 Process Calculations and Flowsheet Analysis	33
4.5.1 Acid (Counter-Current Decantation) Wash Section (Inorganic Contaminant Removal)	33
4.5.2 Organic Wash Section	33
4.5.3 Non-Pesticide Organic Contaminant Removal	35
4.5.4 Heat Balance	35
4.6 Summary of Demonstration Run	36

5. BASIN F SOIL WASHING PROCESS.....37
5.1 Introduction.....37
5.2 Process Description.....39
5.2.1 Feed Preparation Area.....39
5.2.2 Organic Wash Area.....41
5.2.3 Organic Filtration.....41
5.2.4 Organic Distillation.....42
5.2.5 Flotation Area.....42
5.2.6 Froth Liquid/Solid Separation.....42
5.2.7 Clean Soil (Tails) Liquid/Solid Separation.....43
5.2.8 Carbon Adsorption.....43
5.2.9 Wastewater Treatment.....43
5.2.10 Volatile Organic Control.....44
5.3 Summary of Basin F Soil Washing Process.....44

6. RECOMMENDATIONS FOR FUTURE WORK.....46
6.1 Additional Laboratory Studies.....46
6.2 Pilot/Demonstration Testing.....46
6.3 Engineering Optimization.....47

APPENDIX A
- Soil Wash Plant Flowsheet for Basin F Material
- Table A - Material Balance Basin F Soil Washing Plant

LIST OF TABLES AND FIGURES

TABLE — Page No.

1 Surfactant Screening Test Results....10
2 Flotation Process Variable Tests....11
3 Organic Addition to the Basic Flotation Process....13
4 Solvent Washing-Flotation Process Parameter Studies....15
5 Important Process Parameters for Solvent Prewash/Flotation for the Removal of Pesticides from Basin F Soils....18
6 Demonstration Run Product Analysis Data....25
7 Pesticides Material Balance Calculations....27
8 Inorganic Material Balance Example Calculation....28
9 Calculated and Estimated Analysis and Material Wts....31
10 Generalized Material Balance for Basin F Soil Washing Process....40

FIGURE

1 Manufacturer's Drawing of Flotation Cell....5
2 Demonstration Run Process Steps and Material Flow....21
3 Generalized Flowsheet for Basin F Soil Wash....38

SUMMARY

The U.S. Army Toxic and Hazardous Material Agency (USATHAMA) under its program for Innovative Technology Development for Rocky Mountain Arsenal (RMA) issued Task Order No. 8 under Contract No. DAAK-11-85-D0008 to Arthur D. Little, Inc. to evaluate and rank innovative technologies for applicability in treating Basin F Materials at the Arsenal. As a result of that ranking (Final Report on Evaluation/Selection of Innovative Technologies for Testing with Basin F Materials prepared by Arthur D. Little) soil washing was among the technologies chosen for laboratory-scale testing and MTA Remedial Resources, Inc. (MTARRI) was awarded a subcontract to perform the work.

To initiate the evaluation of the soil washing process, MTARRI designed and carried out a laboratory program to determine: the applicability of the process; and the conditions that would remove both the organic and inorganic contaminants from the Basin F materials to yield a clean soil that could be placed in a fill on-site. The process was then proven by a demonstration run, at the bench-scale, with Arthur D. Little personnel observing and sampling the demonstration run product streams. Using the laboratory and demonstration run data a process flowsheet and material balance was produced for a plant to treat approximately 950 tons per day of contaminated Basin F material.

Laboratory Development Program

MTARRI had previously shown that the soil washing process could remove organics and inorganics from soils; however, no work had been done with a material having the particular contaminants contained in Basin F. Therefore, a laboratory development program was required to establish the necessary physical and chemical conditions that would remove these contaminants from the Basin F material.

At the time the scope of work for this program was developed, there were no guidelines available on the degree of contaminant removal that the soil wash should achieve. Therefore, the laboratory program's objectives were to: develop a process to remove as much as possible of all the

contaminants (both organic and inorganic); establish the technical feasibility of the process; and determine the operating parameters within some ranges. Therefore, the laboratory's scope of work was limited to process development.

The results of the laboratory development program established a process that can eliminate the majority of the aldrin, and presumably the other organic contaminants of concern. To accomplish this removal an organic pre-wash of an aqueous slurry of Basin F material is needed, prior to the flotation.

During the laboratory test work no unusual problems or conditions were evident that would cause difficulties when the process is applied on a large scale. Overall, the laboratory program was successful in developing a process to clean up Basin F material. It now only remains to demonstrate this when the conditions established, from the prior test work, are employed in a test run continuously from start to finish. The acid wash section that was initially assumed not to need testing is also a part of this complete demonstration run.

Demonstration Test

As part of MTAPRI's task, a laboratory demonstration run of the process developed during the laboratory test program phase was carried out. Arthur D. Little personnel observed the demonstration run and were responsible for the collection of samples and their analysis. Data generated during the demonstration run were used as the basis for developing the process flowsheet and material balance. Sample collection and analysis by Arthur D. Little was to be detailed, in that major compounds of concern were to be tracked, as far as practicable, throughout the entire process. Analytical methods used were approved and certified by USATHAMA.

In addition, the sampling and analytical program was performed to obtain sufficient data to confirm certain aspects of the process that had not been studied extensively during the laboratory development program. For

example, the number of stages in the organic wash section and organic flow requirement were to be evaluated from the demonstration run data; as was the need for a final acid wash of the Basin F material.

At the time this program was developed, there were no guidelines available on the degree of contaminant removal that the soil washing process should achieve. Therefore, our objective was to remove as much as possible of all the organic and inorganic contaminants. This caused us to use a more extensive process during the demonstration run than was necessary based upon the data subsequently obtained from the demonstration run. Therefore, the soil washing process for the full-scale treatment of Basin F material has fewer unit operations than were employed in the demonstration run. It has been assumed that if the clean washed Basin F material meets the criteria set forth in the EPA's proposed toxic characteristic leaching procedure (TCLP), we will have achieved the required goal of contaminant removal.

Overall, the demonstration run showed that soil washing of Basin F material can eliminate the contaminants, both organic and inorganic and yield a final clean soil that passes or exceeds the proposed TCLP criteria set by the EPA.

During the demonstration run no problems were encountered that were insurmountable or would make this a difficult process to implement on a large scale. The required equipment is currently manufactured so no new equipment design or development is required. Reagents used are all available in large quantities.

Although some data was not obtained during the demonstration run and some problems with the calculated material balances were observed, these were resolved by the described assumptions and adjusting the mass flow and analysis. These adjustments were necessary so that material balances could be developed and equipment sized, but in no way detracts from the

conclusion that this process will clean up Basin F material. In addition, analysis of the data from the demonstration run showed where some process simplifications could be made. These changes were incorporated into the full-scale process flowsheet.

Full-Scale Basin F Soil Washing Process

Using the data collected and numerous flowsheet/material balance studies, a processing plant was designed that will produce clean soil (as defined by the EPA's TCLP procedure) that can be returned to a fill on-site. This plant would employ equipment currently available and reagents that are readily available in large quantities.

The largest flow stream in the plant is about 800 gpm (slurry to the organic wash area) and the largest piece of equipment, other than tanks, are the four flotation cells at 1500 cu. ft. each.

Overall, a full-scale soil washing plant would be easy to operate, require a minimum of maintenance, and would have an above average on-line factor. Instrumentation and control loops would be minimal. The major control would be tank levels.

The plant would be relatively safe to operate since neither high pressure or high temperatures are employed. The plant would be environmentally acceptable since it is temporary and all emissions, air, water, and soil would comply with current emission standards.

RECOMMENDATIONS FOR FUTURE WORK

If in the final evaluation of innovative technology to clean up Basin F, soil washing continues to be a viable technology both from an environmental and cost standpoint, additional work is needed to finalize the process, engineer the plant and finalize the costs for the overall project. This additional work would be in three steps: laboratory studies, pilot plant demonstration, and engineering design.

Additional laboratory studies would consist of two parts. First, the process would be defined in detail. For example, can toluene be eliminated from the wash solvent, and is there a better solvent system that would make the distillation system more effective in eliminating the organic contaminants. Second, data for engineering design needs to be gathered to more accurately size the equipment. Such items needed are size distribution of the feed material to a detailed analysis of flotation variables for scale-up design.

Pilot/demonstration testing would be required since it would not be prudent to scale up the proposed process from laboratory bench-scale studies to the full-scale plant (350 tons per day). Therefore, a pilot/demonstration plant should be built and operated for two to four months. This small-scale plant (1000 lb/hr) would be built based upon additional detailed laboratory work which would fix the flowsheet so little or no equipment arrangement testing will be needed. Therefore, this would be more a demonstration plant with only limited testing on the effect of process water recirculation, distillation and quality of the clean soil produced. All data needed for scaling up to a full-scale plant will be obtained by a month's run at steady state conditions.

During the preceding two steps, the work should be subjected to engineering optimization as the data becomes available. This would require establishing an engineering team to assist in program design prior to the start of either phase of work. During the additional data collection the engineers could evaluate data and make recommendations for changes, new tests, additional data so that upon completion of the pilot/demonstration run there would be sufficient and complete data for the final and detailed engineering of the full-scale soil washing process plant.

1. INTRODUCTION

The U.S. Army Toxic and Hazardous Material Agency (USATHAMA) under its program for Innovative Technology Development for Rocky Mountain Arsenal (RMA) issued Task Order No. 8 under Contract No. DAAK-11-85-D0008 to Arthur D. Little, Inc. to evaluate and rank innovative technologies for applicability in treating Basin F Materials at the Arsenal. As a result of that ranking (Final Report on Evaluation/Selection of Innovative Technologies for Testing with Basin F Materials prepared by Arthur D. Little) soil washing was among the technologies chosen for laboratory-scale testing and MTA Remedial Resources, Inc. (MTARRI) was awarded a subcontract to perform the work.

To initiate the evaluation of the soil washing process, MTARRI designed and carried out a laboratory program to determine: the applicability of the process; and the conditions that would remove both the organic and inorganic contaminants from the Basin F materials to yield a clean soil that could be placed in a fill on-site. The process was then proven by a demonstration run, at the bench-scale, with Arthur D. Little personnel observing and sampling the demonstration run product streams. Using the laboratory and demonstration run data a process flowsheet and material balance was produced for a plant to treat approximately 950 tons per day of contaminated Basin F material.

From the laboratory data, demonstration run results and the flowsheet and material balance calculations, capital and operating costs were then developed. This cost data is reported in a separate memorandum report for incorporation into the Final Project Report being prepared by Arthur D. Little, Inc.

1.1 Laboratory Development Program

MTARRI had previously shown that the soil washing process could remove organics and inorganics from soils; however, no work had been done with a material having the particular contaminants contained in Basin F. Therefore, a laboratory development program was required to establish the necessary physical and chemical conditions that would remove these contaminants from the Basin F material.

At the time the scope of work for this program was developed, there were no guidelines available on the degree of contaminant removal that the soil wash should achieve. Therefore, the laboratory program's objectives were to: develop a process to remove as much as possible of all the contaminants (both organic and inorganic); establish the technical feasibility of the process; and determine the operating parameters within some ranges. Therefore, the laboratory's scope of work was limited to process development.

The data from the laboratory program and demonstration run along with engineering judgment were used in the preparation of the preliminary process flowsheet and the specification and selection of equipment for a full-scale (950 ton per day) treatment plant. The flowsheet and equipment specified were then used to estimate the capital and operating costs for the full-scale soil washing plant.

Process conditions established during laboratory development program are presented in Section 3 of this report. The optimum conditions were then used in the subsequent demonstration run.

1.2 Demonstration Run

During the week of April 6, 1987, MTARRI carried out the demonstration run using the techniques and reagents which provided the best removal of the contaminants from Basin F material based upon the laboratory program.

During this demonstration period, Arthur D. Little, Inc. personnel observed the run and collected the samples to be analyzed to determine clean up effectiveness and to obtain data for material balance. These samples were analyzed in the Arthur D. Little, Inc. laboratory which has been certified by USATHAMA for the chemical compounds of concern. The results were reported to MTARRI, and are incorporated in the discussion of the demonstration run (Section 4).

1.3 Program Analysis and Engineering Design

The scope of the laboratory program did not provide for the collection of all the data necessary to design a full-scale plant since this program was a preliminary technical assessment of the soil washing process as applied to Basin F material. In addition, some data was not obtained during the demonstration run. These factors created the need for extensive treatment of the data, flowsheet analysis, and engineering estimates to complete the process evaluation. The calculations and assumptions used for this data treatment are discussed briefly as part of the evaluation of the demonstration run. The results of the overall analysis of the program data were used to complete the detailed flowsheet and to develop the capital and operating costs for a Basin F material washing plant.

2. DESCRIPTION OF TEST FACILITIES

The laboratory development program and the bench-scale demonstration run were carried out in a 300 square foot laboratory. For health and safety concerns this laboratory, with its contained equipment, was totally dedicated to this single project.

Other than the flotation machine, all laboratory procedures were carried out in standard glassware and with conventional laboratory equipment, such as pH meters and balances. The flotation machine used was a Denver Equipment D-12 Lab float machine (Figure 1 is the manufacturer's drawing). In all tests, a 1000 gram tank was used. This machine provides agitation and aeration, to separate hydrophobic materials from the bulk of a slurry.

2.1 Analytical Support

The laboratory development program was supported by three different levels of analysis. Initial analyses used methylene chloride extraction in Soxhlet extractors to produce data to determine the degree of removal of the gross organics. This was followed with detailed analysis, by an independent analytical laboratory, to determine the disposition of aldrin in the test products. Also, MTAPRI used its own analytical capabilities to aid in the laboratory program.

For the demonstration run, analytical work was performed by Arthur D. Little using USATHAMA certified procedures.

2.2 Health and Safety

Handling and containment of Basin F material was necessary to safeguard workers and the environment. Specific procedures followed are summarized below.

2.2.1 Worker Protection

When working with, and around Basin F material, several steps were taken to protect the employees. Medical surveillance was established for the employees who would be in contact with the material by

FIGURE 1

MANUFACTURER'S DRAWING OF FLOTATION CELL

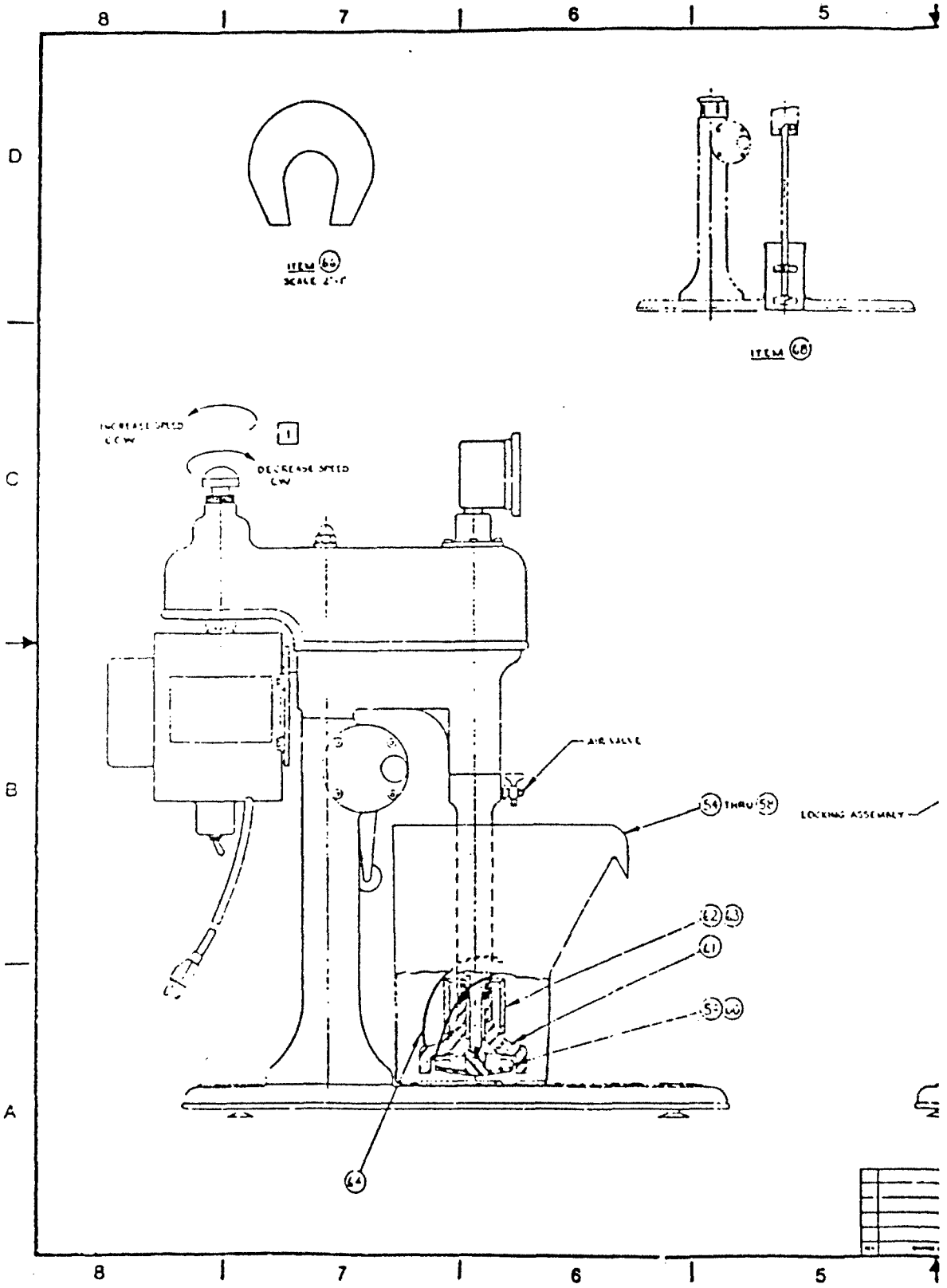

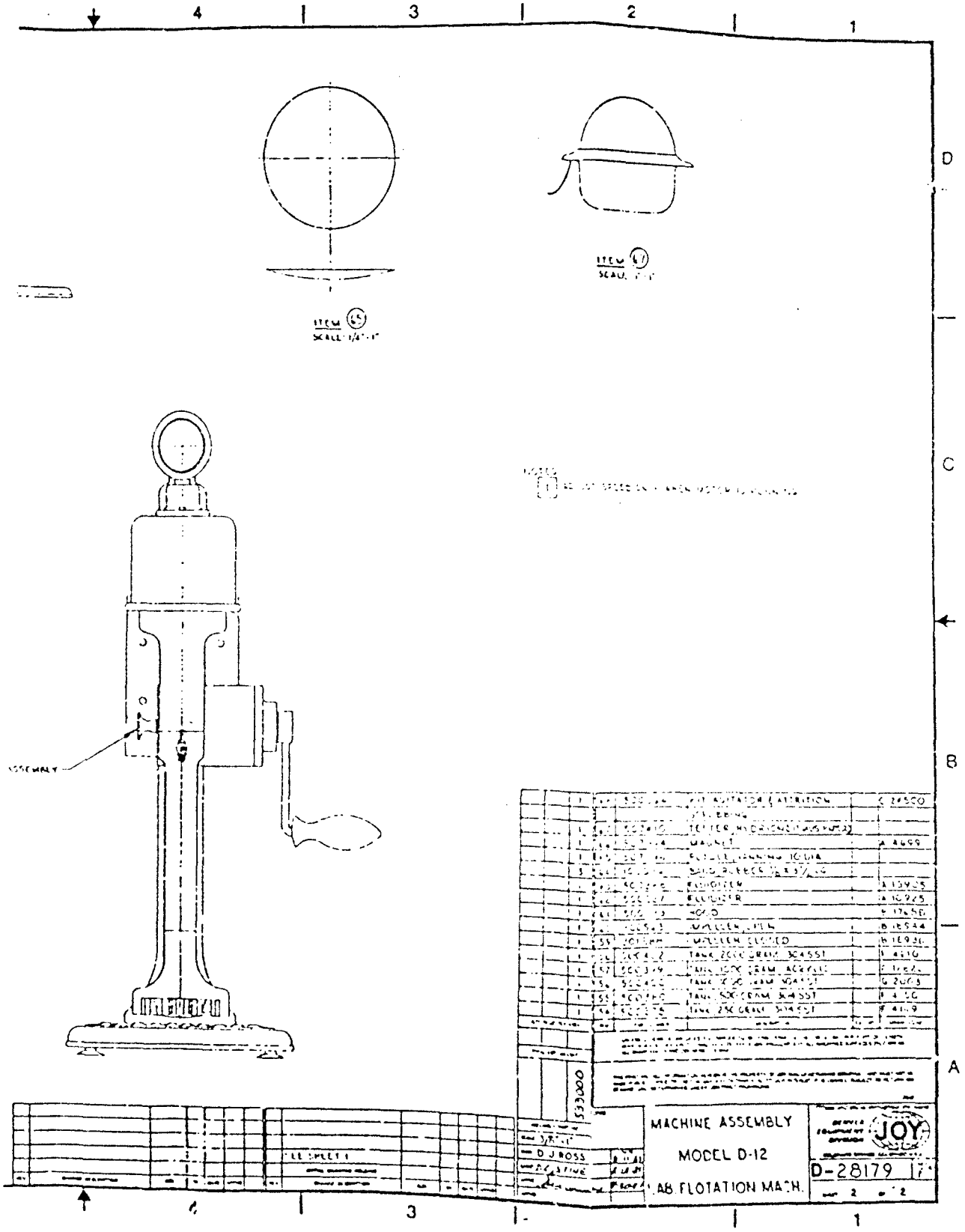
MACHINE ASSEMBLY
MODEL D-12
LAB FLOTATION MACH.
JOY
D-28179

pre-exposure physical examinations, including extensive blood chemistry analysis. Upon completion of the work, they were examined once again to make sure they had not been exposed to excessive levels of chlorinated organics.

While working in the dedicated laboratory, complete changes of fresh clothing were provided daily. The clothing was covered by Tyvek® coveralls and Tyvek® shoe covers. Hands were protected by two gloves, both of which were solvent resistant. Respirators approved for organic vapor and dust protection were utilized at all times in the laboratory, as were safety glasses.

2.2.2 Environmental Protection

The dedicated laboratory was provided with a negative pressure ventilation system to prevent release of any toxic materials outside the laboratory. The heating and cooling system was isolated to eliminate diffusion. All equipment in the laboratory remained in the laboratory for the duration of the entire program. Lab wastes and cleaning materials were placed in a sealed container in the laboratory; when the laboratory is decontaminated all waste will be drummed and shipped back to RMA.

3. LABORATORY DEVELOPMENT PROGRAM PROCEDURES AND RESULTS

This section discusses the work completed during the laboratory development program to evaluate the soil washing process on Basin F material.

3.1 Introduction

MTARRI's prior work on other contaminated soils provided base line information on the soil washing process and reagents which had predicable probability of success on Basin F material. Initially, it was assumed that the inorganic contaminants would be easily removed using a counter-current acid wash; this assumption was based upon previous work with soils contaminated with the same type of inorganic contaminants. Therefore, this step was not examined during the laboratory phase of the program but would be tested during the demonstration run.

Previous work by MTARRI on other projects indicated that organic contaminants could be freed from soil particles and subsequently separated using froth flotation by reacting an aqueous slurry of contaminated soil with a mixture of caustic, silicate and a surfactant. This served as the starting point of this investigation. In order to expedite the program and control costs, it was assumed that if the major contaminant (aldrin) could be removed from the contaminated material then the other organic contaminants could be also. Therefore, during this laboratory program aldrin was the only contaminant monitored.

Since gathering engineering data was not one of the objectives of this assignment, we did not, for example, study in detail the settling rates of the slurry after flocculation to carefully size thickeners. We only determined if the material could be flocculated, and by observation determine if settling was within acceptable rates. Consequently, engineering judgments were used in the selection and sizing of much of the equipment for the preliminary process flowsheet design.

To summarize: the objective of the laboratory program was simply to determine the physical/chemical conditions that would remove the contaminants from Basin F material using equipment that, based upon our professional engineering judgments, could be applied on a large scale.

3.2 Sample (Basin F Material)

The contaminated Basin F material used in this program was received in two 5 gallon sealed plastic pails, early in January 1987, from Rocky Mountain Arsenal. This sample was a wet mass with the consistency of moist modeling clay. The two pails were mixed together by emptying them onto a plastic sheet and combining them into a single pile. This pile was remixed five times and then split in half and returned to the original plastic pails. The two pails were then stored at room temperature.

Several observations were made during the mixing operation. First, the sample appeared to be homogeneous. Second, there were no coarse rocks or sand. Third, there were lumps of a black material (up to 1/2 inch in size) which resembled asphalt.

Four samples of the Basin F material were taken during the mixing process. One of these samples was sent to Arthur D. Little, Inc. for analysis. Two of the samples were sent to an independent laboratory for aldrin analysis, while the fourth was held in reserve.

3.3 Surfactant Scoping Tests

Of the numerous surfactants available, three (each of a different type) were selected to be tested. The selection of these three was based upon past experience with surfactants that have performed well, each for differing types of contaminants. These three were: 1) Biosoft EA4®, an alkyl ethoxyelated alcohol, nonionic, soluble in water and organic solvents, which has seemed to perform well for a wide range of contaminating materials, 2) Makon NF5®, an alkyl aryl ethoxyelated surfactant, oil soluble, which removes heavy oils, and 3) Stephanflo 20®, an anionic olefin sulfonate, which removes light oils.

In these scoping tests, 700 g of wet feed (heads) was mixed with one liter of water to which sodium hydroxide (to pH 9.5), sodium silicate (7 lb/ton) and surfactant (3 lb/ton) had been added. This slurry was then mixed at room temperature for twenty minutes. The slurry was transferred to the 1000 g float cell, diluted to 2.5 liters and floated for 30 minutes. The tails (washed material) from tests 1, 2 and 3 were then submitted for aldrin analysis.

3.3.1 Results of Surfactant Scoping Tests

Table 1 presents the results of the surfactant scoping tests (tests 1 through 3). As can be seen, the Biosoft EA4 achieved greater removal of aldrin than the other two and was therefore selected to be used throughout the remainder of this program.

3.4 Flotation/Chemistry Variables Evaluation

The next series of tests was directed at evaluating the process variables for flotation removal. Table 2 presents the data for these tests (tests 4 through 10).

These tests were similar in nature to the scoping tests, in that a known amount of wet feed (heads) and 2.5 liters of water were added to the 1000 g flotation cell. This slurry was mixed using the flotation machine, without air, during which time reagents were added. After a suitable time of mixing (20 to 30 min.), air was introduced and the froth collected. The variables tested are shown in Table 2.

In tests 8 and 9, the Basin F feed material was slurried with water then the solids flocculated and the liquid decanted. This was done to see if removal of soluble salts would aid in the flotation removal of the pesticides (aldrin, etc.).

3.4.1 Discussion of Results of Flotation Variables Evaluation

Variables examined were not all inclusive, but were the ones that were believed to have the greatest effect upon organics removal from Basin F material. As can be seen from Table 2, flotation alone was not effective in eliminating aldrin to a level of more than a few hundred

TABLE 1

SURFACTANT SCREENING TEST RESULTS

TEST NO.	SURFACTANT USED	TAIL (WASHED FEED MATERIAL) ANALYSIS (ppm)		
		Aldrin	Dieldrin	Isodrin
1	BioSoft EA 4	465	203	62
2	Makon NF 5	875	415	31
3	Stephanflo 20	711	277	6
Head (Contaminated Feed Material)		1190 ± 200	460 ± ?	42 ± ?

Source: MTA Remedial Resources, Inc.

TABLE 2

FLOTATION PROCESS VARIABLE TESTS

TEST NO.	VARIABLE TESTED	% SOLIDS IN DRY TAIL	ppm ALDRIN IN DRY TAIL	% DISTRIBUTION OF ALDRIN IN TAILS
4	Repeat Test 1	91	not analyzed	----
5	Flotation Time	78	310	20.3
6	Flotation Time	91	520	39.7
7	Org. Modifier	87	570	41.8
8	Prewash	88	420	30.9
9	Prewash-Carbon	92	660	51.1
10	Caustic Addition	88	850	62.8

Head (Contaminated Feed Material) 1190 ± 200

Source: MTA Remedial Resources, Inc.

parts per million. None of the process variables studied reduced aldrin below a few hundred parts per million so it appeared that flotation alone would not effectively clean up Basin F material. However, aldrin removal achieved by flotation was greater than the solids in the froth; therefore, it was concluded that if aldrin could be freed from the substrate it could be selectively removed. During these tests, it was observed that some black, asphaltic type particles were not removed by flotation, and the assumption was made that these black organic lumps were holding the balance of the pesticides. Therefore, a technique to cause the removal of this black, asphaltic material needed to be developed. This led to the next phase of the study, in which organic solvents were used to dissolve these black particles and/or to cause them to float.

3.5 Basic Flotation Process Modification Studies

The third series of tests used organic solvents to determine whether the black, asphaltic material, observed in prior tests, could be made to float or dissolve so as to release the pesticides (aldrin) and thus improve the degree of decontamination of the Basin F material. Various solvents and techniques were tried in tests 11 through 15 to examine this modification to the basic soil washing process. Table 3 presents the summary data for these tests.

For tests 11, 12 and 14, the Basin F material was combined with water and reagents, as before, in the flotation cell during agitation. Organic solvent was added to the agitated slurry and mixed for 10 to 30 minutes. Once thoroughly mixed, air was introduced and the resultant froth removed.

In tests 13 and 15 the Basin F material, water, and the reagents used in the flotation chemistry studies were mixed together. After approximately 30 minutes of mixing, the organic solvent was added and agitation continued for an additional 30 minutes. The agitation was then stopped, the mixer removed and the slurry allowed to settle during which time the organic phase floated to the top and was removed by decantation. The residual slurry was transferred to the flotation machine and floated as in all previous tests.

TABLE 3

ORGANIC ADDITION TO THE BASIC FLOTATION PROCESS

TEST NO.	ORGANIC SOLVENT USED	METHOD OF SOLVENT RECOVERY	% SOLIDS IN DRY TAIL	ppm ALDRIN IN DRY TAIL	% DISTRIBUTION OF ALDRIN IN TAILS
11	Hexane	Flotation	72	570	34.4
12	Diesel Fuel	Flotation-Carbon	88	1200	88.1
13	Diesel Fuel	Stage Decant-Flotation	86	280	20.1
14	Acetone	Flotation	78	760	49.8
15	KO* Mixture	Stage Decant-Flotation	92	160	12.3
Head (Contaminated Feed Material)				1190 ± 200	

* Solvent mixture = 74% Kerosene plus 26% Octanol

Source: MTA Remedial Resources, Inc.

3.5.1 Discussion of Results For Flotation Process Modification

Data from tests 11, 12 and 14 indicate that the addition of organic solvent and the recovery of the solvent by flotation, was not an effective way to reduce the aldrin concentration in the tail solids. However, addition of the organic solvent with removal prior to flotation (tests 13 and 15) produced better removal of aldrin from the soil (tails) than all previous tests. (Note also that with the pre-organic wash followed by flotation, the amount of solids reporting to the tails was greater than when flotation was used alone.)

These five tests suggested that pre-treatment of Basin F feed material with an organic solvent prior to flotation would improve the effectiveness of the process: that is, a greater degree of aldrin removal was achieved. The next series of tests were performed to gather data on organic solvent washing in combination with flotation.

3.6 Solvent Prewashing Process Evaluation

Twelve additional tests (16 through 27) were conducted to define the process operating conditions prior to the scheduled demonstration run. These tests centered mainly upon the organic solvent pre-wash section. Table 4 presents the data from these tests.

3.6.1 Solvent Pre-wash Test Procedures

Organic solvent pre-wash was accomplished by mixing varying amounts and types of organic solvents with an aqueous slurry of Basin F feed material. Subsequent to mixing, the bulk of the solvent was removed by settling and decanting of the floating solvent/emulsion. In the staged tests, this step was repeated two or more times. Following the last decantation, the required flotation reagents (caustic, silicate and surfactants) were added to the slurry and this slurry subjected to flotation to remove any trace of the added organic solvents and additional Basin F contaminant. In one test (test 12), flotation was employed between each stage of solvent washing to enhance solvent removal.

TABLE 4

SOLVENT WASHING FLOTATION PROCESS
PARAMETER STUDIES

	SOIL WASHING PARAMETERS					FLOTATION PARAMETERS			WASHED SOIL		
TEST NO.	SOLVENT USED (Composition)	NO. OF STAGES	ml SOLVENT PER STAGE	MIXING TIME PER STAGE (min)	MIXING TEMP (°C)	FLOTATION TIME (min)	FLOTATION TEMP (°.)	FLOTATION FEED (% Solids)	% FEED SOLIDS REC AS WASHED SOIL	WASHED SOIL ppm ALDRIN	% FEED ALDRIN REMOVED
16	62% Kerosene, 38% Toluene	7	100	20	75	60	40	12.4	92	140	89.2
17	62% Kerosene, 33% Toluene	2	30	20	20	55*	20	13.5	91	140	83.5
18	70% Kerosene, 20% Toluene, 10% Octanal	4	150	30	58	80	40	15.7	84	31	97.3
19	66% Kerosene, 25% Toluene, 9% Octanal	1	400	45	20	90	30	20.2	88	50	96.3
20	70% Kerosene, 20% Toluene, 10% Octanal	3	200	20	20	> 60	20	13.7	87	123	91.6
21	lost during testing - not completed										
22	70% Kerosene, 20% Toluene, 10% Octanal	5	100	20	70	80	50	20.5	84	15	98.6
23	lost during testing - not completed										
24	lost during testing - not completed										
25	lost during testing - not completed										
26	70% Kerosene, 20% Toluene, 10% Octanal	5	200	20	20	30	50	20.5	86	50	96.4
27	70% Kerosene, 20% Toluene, 10% Octanol	1	325	130	20	30	40	22.1	92	108	91.6

* Total including interstage

Source: MTA Remedial Resources, Inc.

3.6.2 Discussion of Results of Solvent Washing Evaluation

Tests 16 through 27 were scoping in nature and as such have certain limitations in determining the extent of removal of aldrin that can be achieved using the solvent pre-wash; however, even with this limitation, several important conclusions and observations could be made. The major conclusion is that organic solvent prewashing does effect a good removal of aldrin.

Test 16 was run to compare the kerosene-toluene mixture with the kerosene-octanol mixture used in test 15 (Table 3). The results appeared to be the same but better than diesel (kerosene) alone (test 13, Table 3). Remaining unanswered was the question "Did these two mixtures remove aldrin attached to different constituents in the Basin F material?"

Therefore, a toluene, kerosene, octanol-1 (TKO) solvent was tried in test 18. The three component solvent removed more aldrin, therefore in all subsequent tests this TKO mixture was used. No other solvent mixtures were tried but it is very likely that other combinations could be found that work as well or better.

Test 17 was carried out with a very small amount of organic solvent mixture, with flotation to recover it between mixing stages. The results show that this technique yields the same results as decanting, but uses less solvent and fewer stages. This may be the preferred method to be employed in a full-scale plant. This method was not employed in the laboratory because of testing difficulties at this small scale.

Test 19 was run to see if staging could be eliminated using a larger volume of solvent. It seemed this was true. However, a repeat of single stage test (test 27) indicated poorer results, which could have also been the result of a shorter flotation time used in this test.

Tests 18 and 22 were comparable tests but the level of agitation used in test 22 was higher than test 18. This indicated that mixing speed was an important variable. However, time of mixing, at least beyond 20 minutes, does not appear to offer any advantage.

By comparing data from tests 19, 20, 22, 26 and 27 it appears that the total flotation time was an important process parameter. To achieve good removal of pesticides flotation times in excess of 60 minutes or more will be required. This data also indicates that heating during the solvent washing is not necessary to achieve good pesticide (aldrin) removal.

This series of tests did elicit the major important process variables for treating Basin F material via a soil washing process. Table 5 presents these variables in an order of importance over the ranges tested.

3.7 Summary and Conclusion of the Laboratory Development Program

The results of the laboratory development program established a process that can eliminate the majority of the aldrin, and presumably the other organic contaminants of concern. To accomplish this removal an organic pre-wash of an aqueous slurry of Basin F material is needed, prior to the flotation.

During the laboratory test work no unusual problems or conditions were evident that would cause difficulties when the process is applied on a large scale.

Overall, the laboratory program was successful in developing a process to clean up Basin F material. It now only remains to demonstrate this when the conditions established, from the prior test work, are employed in a test run continuously from start to finish. The acid wash section that was initially assumed not to need testing is also a part of this complete demonstration run.

TABLE 5

IMPORTANT PROCESS PARAMETERS FOR SOLVENT PREWASH/FLOTATION FOR THE REMOVAL OF PESTICIDES FROM BASIN F SOILS
(in apparent order of importance)

PARAMETER	COMMENT	RANGE STUDIED	PROBABLE MINIMUM REQUIRED
Flotation Time	Needed after solvent wash to achieve removal of all organics.	30-130 min	> 60 min
Stage Addition	Will reduce amount of solvent required (counter current).	1-7 stages	2 to 4
Amount of Solvent	With better interstage removal can reduce amount used.	30 ml-400 ml per 2 liter slurry	< 30 ml per 2 liter slurry
Interstage Separation	Can be achieved by long settling time or flotation.	1-48 hrs.	use flotation
Mixing	Greater mixing energy will improve removal of contaminants.	very low to low	unknown
Mixing Time	Mixing energy input and mixing time must go hand in hand.	20-130 min	unknown
Solvent Mixture	Mixture used probably unnecessary. Maybe, with what is now known, use kerosene alone or with 1-2% Octanol-1.	up to 40% other than kerosene	kerosene alone or or 1-2% octanol
Temperature	Unimportant in solvent wash, but needed in flotation.	Room to 75°C	none in solvent wash, approx. 50°C in flotation.

Source: MTA Remedial Resources, Inc.

4. DEMONSTRATION RUN

This section describes the demonstration run procedures, presents and discusses the results and how they were used to develop the process flowsheet and material balance for the "Soil Wash Decontamination Process for Basin F Materials."

4.1 Introduction

As part of MTARRI's task, a laboratory demonstration run of the process developed during the laboratory test program phase was carried out. Arthur D. Little personnel observed the demonstration run and were responsible for the collection of samples and their analysis. Data generated during the demonstration run were used as the basis for developing the process flowsheet and material balance. This data in turn led to the development of the capital and operating cost estimates (presented in a separate memorandum report). Sample collection and analysis by Arthur D. Little was to be detailed, in that major compounds of concern were to be tracked, as far as practicable, throughout the entire process. Analytical methods used were approved and certified by USATHAMA.

In addition, the sampling and analytical program was performed to obtain sufficient data to confirm certain aspects of the process that had not been studied extensively during the laboratory development program. For example, the number of stages in the organic wash section and organic flow requirement were to be evaluated from demonstration run data; as was the need for a final acid wash of the Basin F material.

At the time this program was developed, there were no guidelines available on the degree of contaminant removal that the soil washing process should achieve. Therefore, our objective was to remove as much as possible of all the organic and inorganic contaminants. This caused us to use a more extensive process during the demonstration run than was necessary based upon the data subsequently obtained from the demonstration run. Therefore, the soil washing process for the full-scale treatment of Basin F material has fewer unit operations than were employed in the demonstration run. It has been assumed that if the clean washed Basin F material meets the

criteria set forth in the EPA's proposed toxic characteristic leaching procedure (TCLP), we would have achieved the required goal of contaminant removal.

4.2 Demonstration Run Procedure

Figure 2 shows the demonstration run steps used and the material flows.

4.2.1 Organic Wash Steps

In step 1, 686.8 grams of mixed wet feed sample was taken from the 5-gallon storage container and put into the round bottom mixing tank. To this 2 liters of tap water from Golden, Colorado municipal water system was added. Mixing was begun using a 2 1/2" diameter three blade marine type propeller turning at 900 rpm. When the solids had been dispersed the organic solvent mixture (TKO) was added. This organic mixture consisted of 69.4% kerosene, 20.0% toluene and 10.6% octanol on a weight basis. The slurry was heated, and the temperature reached 47°C. (Due to the fact that there were tight time constraints, not all of the data obtained during the laboratory development phase of the program was completely analyzed prior to the demonstration phase testing. This is true with respect to the data indicating that heating during solvent washing is not a necessity to achieve good aldrin removal. As a result, heating was used during the demonstration phase testing.) Mixing was continued for 60 minutes. Mixing was stopped and the agitator removed from the slurry and the slurry settled for 60 minutes. The organic layer on taop was then carefully decanted (158 ml) from the aqueous slurry.

In step 2, 200 ml of fresh TKO mixture was added to the mixing tank containing the aqueous slurry from the previous wash step, the agitator replaced, heaters turned on and mixed for 60 minutes. During this second period of mixing the temperature reached 69°C. As before, the mixer was stopped, removed and the slurry settled for 60 minutes and the organic layer (90 ml) carefully decanted off. In this step the recovery of organic solvent was poor.

Figure 2

Demonstration Run Process Steps and Material Flow

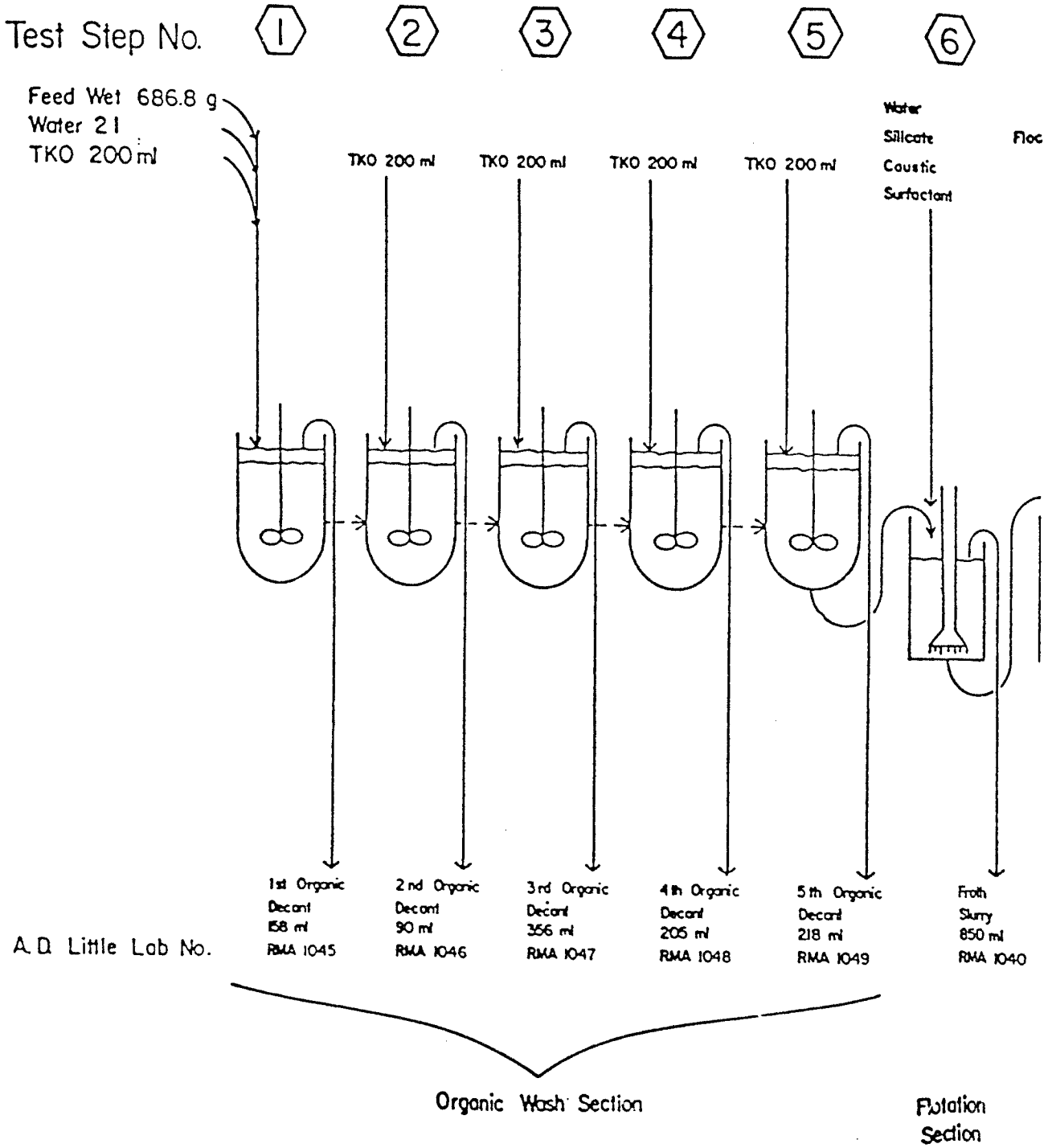

cess Steps

W

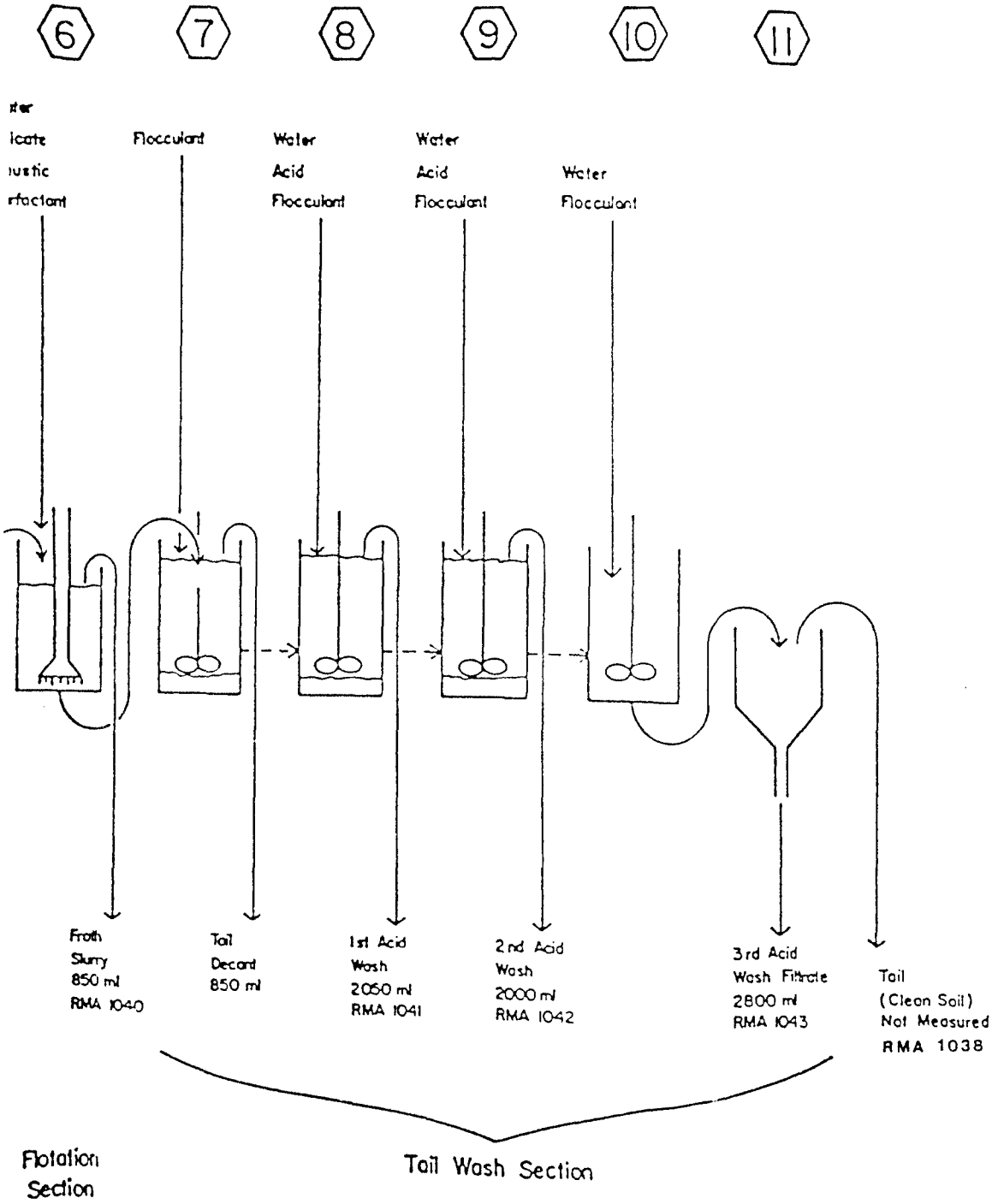
6
7
8
9
10
11
ter
icate
ustic
rfactant
Flocculant
Water
Acid
Flocculant
Water
Acid
Flocculant
Water
Flocculant
Froth
Slurry
850 ml
RMA 1040
Tail
Decant
850 ml
1st Acid
Wash
2050 ml
RMA 1041
2nd Acid
Wash
2000 ml
RMA 1042
3rd Acid
Wash Filtrate
2800 ml
RMA 1043
Tail
(Clean Soil)
Not Measured
RMA 1038
Flotation
Section
Tail Wash Section

Step 3 was started similar to step 2 but it was observed that the system was flocculated. Therefore, 2.7 g D grade sodium silicate was added which broke up the flocculants. Mixing was continued for 60 minutes and in this step the temperature rose to 44°C. Again the mixer was stopped and the agitator removed and the slurry allowed to separate for 60 minutes. After settling, the organic layer was decanted off and 356 ml of organic solvent were recovered.

Step 4 was run the same as step 2 and no additional silicate was required. In this step, the temperature reached 68°C during mixing; 205 ml of organic solvent was decanted.

In step 5, 200 ml of TKO mixture was again added to the aqueous slurry from the prior step and mixed for 60 minutes as in the previous steps; in this step the temperature rose to 69°C. After the mixing the mixer was stopped and removed; the slurry was allowed to settle overnight before the organic solvent (218 ml) was decanted.

4.2.2 Flotation Step

After as much organic solvent as possible was removed, the entire volume of aqueous slurry was transferred into the 1000 g flotation cell and placed in the laboratory flotation machine. About 1 liter of water was added to this mixture and the flotation machine agitator was started and the slurry heated with immersion heaters. Then the following reagents were added:

3.50 g Caustic (NaOH)
2.00 g D grade Sodium Silicate
0.19 g Biosoft EA4®

The slurry was mixed and heated for 15 minutes prior to the start of flotation. After mixing, the slurry was at 49°C and had a pH of 11.

Flotation was started by the injection of air with the machine rpm at 1200. The froth was continuously removed for 30 minutes at which time additional surfactant (0.16 g Biosoft EA4®) was added and the rpm increased to 1500. Flotation and froth removal was continued for a total of 60 minutes. The froth volume was measured at 850 ml, and the tail (clean soil) slurry at 2200 ml.

The tail slurry was transferred to a 4 liter beaker where flocculants were added so the solids could settle and clear water recovered. The flocculants used in this step consisted of both organic and inorganic compounds: 100 ml of 0.1 g/l Superfloc 84® solution and magnesium chloride. Recovered water was 850 ml after settling for 1 hour and 22 minutes.

4.2.3 Acid Wash Steps

The settled solids remaining were then acid washed in three stages using hydrochloric acid (steps 8 through 11).

In the same beaker used to initially decant off tail water, tap water was added to bring the total slurry volume to 3600 ml. HCl was then added during mixing to bring the pH down to 5.0; this required 7.3 ml of reagent grade acid (37% HCl). The solids were flocculated again using Superfloc 84® and allowed to settle for 30 minutes. After settling, 2.05 l of clear solution was recovered.

For the second wash (step 8) tap water was added in the same beaker to bring the slurry volume back to 3600 ml. Again HCl was added to pH 4.3 (1.3 ml reagent grade acid, 37% HCl) during mixing. The slurry was flocculated using the same reagents and allowed to settle: 2.0 l of clear solution were recovered.

The last wash (step 9) was carried out as before, except no acid was added; the volume was brought up to 3600 ml with tap water and mixed briefly. The pH was 4.9. Flocculant was added and allowed to settle. In this step, the clear liquid was decanted off and the settled solids were transferred to two Buchner filters to remove additional solution. The filtrate and decanted solution were combined for a total volume of 2800 ml. The wet filter cake was transferred to sample jars.

4.2.4 Demonstration Run Samples

During this demonstration run samples of the products were collected by the Arthur D. Little observer. The Arthur D. Little laboratory numbers assigned to these samples are shown in Figure 2.

The organic solvent material and tails (washed Basin F material) were taken in their entirety as samples. In the case of the tails, the sample was placed in two containers. Only a portion of the other streams were taken for a sample and the remainder discarded; this includes the froth slurry, 1st, 2nd, and 3rd acid wash solutions. The tail decant liquid was not sampled.

4.2.5 Problems During Demonstration Run

One process problem which arose during the demonstration run was flocculation that occurred during the organic wash (step 3) and prevented complete recovery of the TKO (organic wash solution). This problem was resolved by adding sodium silicate which improved TKO solution recovery in the last three wash steps.

Several problems arose in data acquisition for the demonstration run that created gaps in the data. First, the failure to sample the tail decant liquid. Second, failure to measure the volume and weight of the tail slurry. Third, failure to analyze all the products for all the contaminants of concern, especially the washed Basin F material (tail). Fourth, the failure to determine the solids in the test product samples. To compensate for these data gaps, some assumptions and calculations were made to fill in the missing data. This is discussed more in the following sections.

4.3 Demonstration Run Product Analysis and Material Balance

Analysis of the products and the material balances arising from the demonstration run data are presented in this section.

4.3.1 Analytical Results

Samples of the various output streams from the demonstration run were analyzed by Arthur D. Little using USATHAMA-approved and certified procedures. These results are presented in Table 6. Also, included in Table 6 are the analysis of the fresh TKO organic mixture and tap water used. In Table 6 the results of a TCLP leachate test run on the

TABLE 6

[illegible] PROBE ANALYSIS DATA

	Feed	1st Digester Liquor	2nd Digester Liquor	3rd Digester Liquor	4th Digester Liquor	5th Digester Liquor	Fourth Stage Total	1st Acid Leach	2nd Acid Leach	3rd Acid Leach	Clean Product	Leachate	TKO	Tap Water
[illegible] No.	RM41035	RM41036	RM41037	RM41038	RM41039	RM41040	RM41041	RM41042	RM41043	RM41038	RM41038	RM41044	RM41037
[illegible]														
[illegible]	75.7	3.2	3.1	4.3	3.1	0.1	--	--	--	--	--	--	--	--
	ug/g	ug/l	ug/l	ug/l	ug/l	ug/l	ug/l	ug/l	--	ug/l	ug/g	ug/l	ug/ml	ug/l
[illegible]	830	3100	630	430	87	20	210	0.21	--	0.74	7.2	0.095	ND (<0.125)	ND (<0.0095)
[illegible]	35	120	34	15	3	1	93	ND (<0.0116)	--	0.0157	0.294	0.00643	ND (<0.125)	ND (<0.0077)
[illegible]	360	1[illegible]3	420	150	33	7	55	0.[illegible]3	--	0.[illegible]1	1.24	0.9[illegible]	ND (<3.29)	ND (<0.0[illegible])
[illegible]	43	173	48	14	3	[illegible]	73	ND (<0.115)	--	ND (<0.115)	ND (<0.[illegible]24)	0.1[illegible]8	ND (<2.24)	ND (<0.0[illegible])
[illegible]	ND (<1.88)	45	51	52	52	53	ND (<13.3)	10	--	ND (<3.14)	ND (<1.88)	ND (<2.77)	49	ND (<5.54)
[illegible]	100	ND (<80)	ND (<80)	ND (<80)	ND (<80)	ND (<80)	7[illegible]	1,[illegible]	--	<80	ND (<18.2)	18.1	ND (<80)	ND (<24.4)
[illegible]	203	434	ND (<80)	147	182	118	11[illegible]	1,[illegible]	--	280	ND (5.24)	12.4	ND (<80)	ND (<10.7)
[illegible]	ND (<1.97)	ND (<2.45)	--	--	--	ND (<2.45)	ND (<[illegible])	ND (<13.7)	--	ND (<13.7)	ND (<1.97)	ND (<4.14)	ND (<2.45)	ND (<8.19)
[illegible]	2.04	ND (<2.52)	--	--	--	ND (<2.52)	ND (<[illegible])	140	--	18.7	ND (<1.34)	ND (<2.45)	ND (<2.52)	ND (<4.95)
[illegible]	3.157	--	--	--	--	--	--	ND (<0.[illegible])	--	1.64	--	ND (<0.838)	--	ND (<0.824)
[illegible]	12.1	--	--	--	--	--	--	48	--	12.	--	ND (<5.44)	--	ND (<5.44)
[illegible]	230	--	--	--	--	--	--	350	--	130	--	110	--	8.06
[illegible]	[illegible]	--	--	--	--	--	--	9[illegible]	--	150	--	129	--	ND (<16.7)
[illegible]	2[illegible]0	--	--	--	--	--	--	6[illegible]	--	20,[illegible]	--	12,000	--	4,100
[illegible]	52	--	--	--	--	--	--	[illegible]	--	1,3[illegible]	--	165	--	702
[illegible]	2[illegible]	--	--	--	--	--	--	2,[illegible]	--	25[illegible]	--	NA	--	22,000
[illegible]	220	--	--	--	--	--	--	14[illegible]	--	96,[illegible]	--	ND (<12,900)	--	79,000
Total Na		--	--	--	--	--	--	370	--	420	--	2,700	--	400
Total P		--	--	--	--	--	--	[illegible]	--	1,[illegible]	--	1,350	--	ND (<100)
Total Cl	ND (<5.0)	--	--	--	--	--	--	--	--	ND (<50.6)	--	ND (<25.3)	--	ND (<50.6)
Total		--	--	--	--	--	--	--	1[illegible] ppm	771 ppm	--	--	--	--
Dissolved Solids														
Organic C		--	--	--	--	--	415 ppm	--	--	--	--	--	--	--
[illegible]anic C		--	--	--	--	--	2[illegible] ppm	--	--	--	--	--	--	--

[illegible] - below detection limit
-- - not analyzed

[illegible]: Arthur D. Little, Inc.

tails (washed Basin F material) are given in the column labelled Leachate. The blanks in this table are where no analyses were performed.

4.3.2 Material Balance Calculations

A measure of how carefully laboratory tests were run and analyses were performed is how well the amount of material in the feed can be accounted for in the test products, that is, a material balance. Using the analytical data in Table 6 and the volumes of outflowing streams given in Figure 2, material balance calculations were made.

Material balance calculation for the pesticides is shown in Table 7. For all the pesticides there is excess (15 to 28%) material, when the five organic wash solutions are compared to the feed. The cause for this discrepancy is unknown; possible sources contributing to this excess include imprecise measurement of volumes and/or weights or lack of precision and accuracy of the chemical analyses.

Material balance calculations for some of the inorganic materials are shown in Table 8. In these calculations, the concentration of material in the solution from the tail decant (step 7) and the 2nd Acid Wash solutions had to be estimated as part of the material balance calculations.

Notice that with the exception of fluorine, the material balances for inorganics are poor. In these cases, the discrepancies in the material balance are considerable such that neither errors in sample volume measurements or analytical results could explain them; the unaccounted for material is either in the froth, or tail slurry which were not analyzed for these inorganic compounds.

TABLE 7

PESTICIDES MATERIAL BALANCE CALCULATIONS

AOL Sample No. / Vol./Wt.	RMA 1036 Feed 666.8 g		RMA 1045 1st Organic Wash Sol'n 158 ml		RMA 1046 2nd Organic Wash Sol'n 90 ml		RMA 1047 3rd Organic Wash Sol'n 366 ml		RMA 1048 4th Organic Wash Sol'n 205 ml		RMA 1049 5th Organic Wash Sol'n 218 ml		Other	Total	Percent Material Balance
	ug/g	ug	ug/ml	ug	ug/ml	ug	ug/ml	ug	ug/ml	ug	ug/ml	ug	ug	ug	(ug Total/ug Feed X 100)
Aldrin	830	570,000	3,100	490,000	860	77,000	400	142,000	87	18,000	20	4,000	negligible	731,000	128
Isodrin	35	24,000	130	19,000	34	3,100	15	5,300	3	600	1	200	negligible	28,200	118
Dieldrin	380	261,000	1,400	221,000	400	36,000	150	53,000	33	7,000	7	2,000	negligible	319,000	122
Endrin	49	33,700	170	26,900	48	4,300	19	6,800	3	600	0	0	negligible	38,600	115

Source: MEA Remedial Resources, Inc.

TABLE 8

INORGANIC MATERIAL BALANCE EXAMPLE CALCULATION

Product	Vol. (liter)	Conc.	Arsenic ug/l	Arsenic ug	Copper ug/l	Copper ug	Magnesium ug/l	Magnesium ug	Sulfate ug/l	Sulfate ug	Fluorine ug/l	Fluorine ug	Added by Tap Water
Float Tails	2.21	Cx	120.4		865.		230		254		10,200		
Vol. Removed by Decantation	.85	Cx	120.4	102.3	865.	735.6	230	195.1	254	216.3	10,200	8,670	
Remaining	1.36	Cx	120.4		865.		230		254		10,200		
Water Added	2.05	C_{TU}	0.0		8.1		4.1		79		702		1,440
Total	3.41	C_1	48		350		94.		149		4,500		
1st Acid Wash Sol'n Removed	2.05	C_1	48	98.4	350	717.5	94	192.7	149	305.4	4,500	9,220	
Remaining	1.36	C_1	48		350		94		149		4,500		
Water Added	2.05	C_{TU}	0.0		8.1		4.1		79		702		1,440
Total	3.410	C_2	19.1		144.		40		107		2,200		
2nd Acid Wash Sol'n Removed	2.00	C_2	19.1	38.3	144	288.9	40	79.9	107	213.8	2,200	4,400	
Remaining	1.41	C_2	19.1		144		40		107		2,200		
Water Added	2.00	C_{TU}	0		8.1		4.1		79		702		1,440
Total	3.41	C_3	7.91		64.4		19		90.5		1,300		
3rd Acid Wash Sol'n Removed	2.80	C_3	7.91	22.2	64.4	180.4	19	53.0	90.5	253.5	1,300	3,640	
Remaining	.61	C_3	7.91	4.8	64.4	39.3	19	11.5	90.5	52.2	1,300	790	
Total ug				265.		1,921.7		532.2		1,041.2		26,720 - 4,250 = 22,440	
Feed 885.8 g			12.1 ug/g	8,310	200 ug/g	137,360	2,400	1,648,320	200 ug/g	151,096	52	35,710	
Material Bal. $\frac{\text{ug Total}}{\text{ug Feed}} \times 100$				3.2%		1.4%		0.03%		0.67%		62.6%	
Removed in Froth Sol'n	0.85										10,200	8,670	
Total Out												31,110	
Material Balance												87.1%	

Source: MTA Remedial Resources, Inc.

In the case of fluorine, the material balance approaches 90% when the amount that could have been contained in froth slurry liquid is added to the total.

4.3.3 Discussion of Sampling, Analytical and Material Balance Results

As in most research programs where considerable amounts of data are collected, some data is overlooked and some does not fit because of inaccuracies made in measurements or in analysis. When this occurs, the data that has been obtained must be normalized for use in developing overall material balance.

The data obtained was adjusted using assumptions in order that a process material balance could be developed. This normalization and the assumptions used are discussed in the following section.

4.4 Demonstration Run Data Adjustments

In the preceding section specific data gaps were identified in the data to be used for material balance calculations. Therefore, adjustments were made to the data collected so as to compile a consistent data set for subsequent material balance calculation and process equipment sizing.

4.4.1 Assumptions Used to Adjust Data

The data gap of most concern involved the lack of information regarding the distribution of solids in the froth and tails. To resolve this issue, several assumptions were made based upon previous test data. These assumptions included:

1) the feed sample was 75% solids;
2) the specific gravity of the froth slurry was 1.02;
3) the tail slurry was 1 liter in volume and contained 36% solids.

The first assumption was based upon the percent solids determined in the preliminary laboratory program. The specific gravity of the froth slurry estimate was based upon a measurement made by Arthur D. Little which was measured in the laboratory and found to be about 1.98. It

was assumed that the technique used had an error of about ±0.04 points and so 1.02 was used since the slurry density had to be greater than water. Using a solids density of 2.65, the weight of solids in the froth slurry was then calculated. It was necessary for the last assumption to be made since the tail slurry was collected in two containers and was not remixed (homogenized). Consequently, measurements on a single container alone (as was done) was not sufficient to accurately determine the percent solids. However, a measurement on one of the containers (believed to have the lowest percent solids) determined the percent solids to be 32%; so the assumption of 36% solids seems reasonable.

The results of these calculations and assumptions are presented in Table 9.

The next assumptions made were that the solution in the tail slurry had the same concentration as the 3rd Acid Wasn solution and that the TCLP leaching process removed all of the compounds of interest remaining adsorbed on the solids. The first assumption is reasonable; the second is questionable. Using the volumes of filtrate and volumes of leach solution, the total amount of the compounds of interest were then calculated and the excess over that in solution was assumed to be associated with the solids.

The solids may have more of the compounds of interest than calculated by this method; however, this does not affect the material balance used for flowsheet development.

Results of this calculation of the tail slurry, tail (clean soil) and tail solution analysis are presented in Table 9 in the columns headed Tail Slurry (Total, Solids and Soln).

The balance of the adjustments were made based upon volume of solution added and removed, and the assumption that no inorganic salts were contained in the organic wash solutions. The final normalized data is

TABLE 9

Calculated and Estimated Analysis and Material Wts

(EXCLUDING PARTICULATE BAGASSE)

	Feed	1st Wash	2nd Wash	3rd Wash	4th Wash	5th Wash	Froth Slurry Total	Solids	Sol'n	Tail Bagasse	1st Acid	2nd Acid	3rd Acid	Tail Slurry Total	Solids	Sol'n
Sp gr							1.02**	2.65						1.289**	2.65	
Wt.	606.8*						867	27.3	839.7					1,289.1 g	464.3 g**	824.8 g**
Vol.		158 ml*	90 ml*	356 ml*	205 ml*	218 ml*	850 ml*	10.3 ml	839.7 ml	0.850 l*	2.05 l*	2.00 l*	2.80 l*	1.00 l**	175.2 ml	824.8l
% Solids	85**	3.2	3.1	4.0	3.1	0.1	3.1							36.0**		
Wt Solids	515.1	4.1	2.5	11.6	5.2	.2		27.3							464.3	--
	ug/g	ug/ml	ug/ml	ug/ml	ug/ml	ug/ml	ug/l	ug/g	ug/l	ug/l	ug/l	ug/l	ug/l	ug/l	ug/g	ug/l
Aldrin	1,084.	5,100	840	400	87	20	2,100	65.0	11.2	11.2	4.43	1.79	0.74	1.08	0.001	0.74
Endrin	41.2	130	34	15	3	1	83	2.57	.559	.559	.223	.089	0.0367	.123	0.0002	0.0367
Dieldrin	465.0	1,400	400	120	33	7	535	15.9	8.83	8.83	3.52	1.40	.581	12.6	0.026	0.581
Endrin	56.2	170	48	19	3	ND	73	2.27	ND	ND	ND	ND	ND	2.32	0.005	ND
DiDiazoe	5.35	46	51	52	52	53	24.8	0.00	25.1	25.1	10.0	3.99	5.65	4.64	0.010	5.62
Solfonic							7,330	93.1	4,241	4,241	1,700	678	280	236.5	0.012	280
Solfone	295	294	230	180	142	118	11,000	234.	3,510	3,510	1,400	558	231	190.5	0.0000	231
DDE	ND	ND	ND	ND	ND	ND	ND	ND	ND	ND	ND	ND	ND	ND	ND	ND
DDD	1.57	ND	ND	ND	ND	ND	546.7	0.00	93	93	140	55.7	23.2	19.1	0.0000	23.2
Hg	0.157	ND	ND	ND	ND	ND	55.77	0.813	28.0	28.0	11.1	4.45	1.84	1.52	ND	1.84
As	12.1	ND	ND	ND	ND	ND	9,462.4	280.9	120	120	48	19.1	7.9	6.52	ND	7.9
Cu	200	ND	ND	ND	ND	ND	157,049	4,801.9	865	865	520	144	64.4	1,437.	2.98	64.4
Fe	12,000	ND	ND	ND	ND	ND	9,484,412	301,413.	3,700	3,700	1,500	590	247	1,685	3.19	247
Mg	2,400	82	ND	ND	ND	ND	1,959,280	60,070	10,000	10,000	96,000***	39,900	18,900	157,000	304.	18,900
F	53.8	ND	ND	ND	ND	ND	10,076	0.000	10,200	10,200	4,500	2,200	1,300	2,419	2.90	1,300
Cl	2,000	ND	ND	ND	ND	ND	1,616,000	0.000	1,635,822	1,635,822	***				ND	90,540
SO_4	220	ND	ND	ND		ND	240,920	0.000	254,000	254,000	149,000	107,000	90,540	74,640	72.3	400
															36.6	791
Total N	49.5	ND	ND	ND	ND	ND	1,905	49.5	400	400	600	400	400	34,000	ND	ND
Total P	78.8	ND	ND	ND	ND	ND	14,305	78.8	12,000	12,000	4,800	1,910	791	18,000	--	616
Total ON	ND	ND	ND	ND	ND	ND			ND	ND	ND	ND	ND	ND		
NH_3									9,367	9,367	5,736	1,490	616	-		

* MEASURED measurements during demonstration run
** Estimates
*** Reagents added

Source: MIA Remedial Resources, Inc.

shown in Table 9. Where ND occurs, zero values were assumed rather than detection limit values in performing the material balance calculations.

4.4.2 Discussion of Adjusted Results

Comparison of Table 9 with Table 5 indicates that even though assumptions and estimates had to be made, there is considerable agreement between the data. Consequently, the assumptions and subsequent calculations based on these assumptions did not result in any major disagreement with the actual data that was obtained. During the course of these calculations, no cases were encountered where the assumptions were shown to be invalid.

Assumptions used and subsequent calculations do imply, however, that a considerable quantity of inorganic material went with the froth solids. Flotation was carried out at a pH of 11, where even magnesium would form a solid hydroxide; consequently, the assumption and resulting material balance calculation may not be too far from what actually happened. Hydroxides are known to gather organics from solution and it is postulated that this is what occurred.

The actual distribution of solids between all the products from the test is unknown since no accurate determination of the percent solids was made at the time of analysis of the demonstration run samples by Arthur D. Little. If the real distribution is considerably different than that developed using the assumption then there may be some impact upon the operating costs of the process.

Overall, the adjustments made to the data do not detract from the results and conclusion of the demonstration run. The washed soil was shown to meet the criteria of EPA's TCLP test. The material balance and flowsheet developed using these data are reasonable and no major changes will occur even if some changes in analytical or mass distribution were made. This is due to the fact that all of the assumptions and calculations were reasonable and conservative.

4.5 Process Calculations and Flowsheet Analysis

The analysis of the compounds of concern indicated that some process simplifications could be made from those tested in the demonstration run and would not effect the final results. These changes reduced the capital and operating costs (including the cost of ancillary functions such as organic distillation and wastewater treatment) for a full-scale treatment system.

4.5.1 Acid (Counter-Current Decantation) Wash Section (Inorganic Contaminant Removal)

Material balance calculations indicated that the majority of the inorganic contaminants were eliminated in the flotation section and any additional elimination of heavy metals accomplished by acid washing was insignificant. For example, only 1.9% additional arsenic was eliminated by acid washing. Flowsheet/material balance studies indicated that this same reduction could be achieved by a single filtration step of the tail slurry with adequate water wash on the filter. This change reduced the number of equipment items as well as reduced the volume of wastewater that eventually had to be treated. Therefore the acid, counter-current decantation section was eliminated.

4.5.2 Organic Wash Section

The laboratory development program had not defined either the minimum number of stages or the organic to slurry ratio required in the soil washing process. The analytical results from the demonstration run of the contaminant organics in the organic wash operation produced data that defined this area of the process.

Using the unadjusted data for the pesticides it can be seen that the distribution coefficient of the pesticides between the TKO organic phase and the aqueous slurry is very large. For example, for the first step there was 200 ml of TKO with a concentration of 3100 ug/ml aldrin, which accounts for all the aldrin in the feed (620,000 ug in TKO vs. 570,000 in the feed). This suggests that aldrin may be completely absorbed into the TKO mixture. The other pesticides show

similar results. Therefore, the removal of pesticides, at least theoretically, can be accomplished in a single stage if the organic phase can be completely separated from the aqueous slurry provided the solubility of the pesticides in the TKO mixture is not exceeded.

Since the separation of the organic phase from the aqueous slurry will not be complete due to the solubility of the TKO and very fine droplets in the slurry, three stages of counter-current organic wash have been provided. To achieve the maximum organic removal, coalescing type oil/water separators would be employed. These units typically reduce the level of entrained organics to 10 mg/l; which for the flows in this process amounts to a 99.9% removal per stage.

No data was obtained from the laboratory tests or demonstration run to determine the minimum organic to slurry flow ratio. Solubility of the feed organics in the organic solvent was at least 3100 ug/ml for aldrin, as determined in the demonstration run. However, this did not appear to be the maximum based upon published data of solubilities in organic solvents. Therefore, a value of 15,000 ug/ml was used as the solubility of the feed organics in the TKO organic solvent to set the organic (TKO) to aqueous slurry flow ratio at 0.023.

One other point about the organic wash section that should be discussed is the fate of the organic contaminants other than pesticides. The TKO solvent loaded with pesticides and other organic contaminants is to be distilled to recover the TKO. Analysis of the distillation unit operation by Arthur D. Little personnel pointed out the fact that the majority of the organic contaminants, other than the pesticides, would report in the returned organic solvent. The demonstration run data shows that the distribution coefficient between the TKO solvent and the aqueous slurry is low for these compounds, so that they would be washed out of the TKO solvent into the aqueous phase and would have to be removed by the following processing steps.

4.5.3 Non-Pesticide Organic Contaminant Removal

The developed flowsheet, based upon the preceding information, required that all of the dithiane, sulfoxide, sulfone, and DMMP would have to be removed either in the flotation area or by other means.

The adjusted data presented in Table 9 suggests that about two thirds of these other organic contaminants would be removed by flotation; the balance remain in solution. Therefore, an activated carbon adsorption system was added to the process to treat a bleed stream of water to eliminate the balance of these other organic contaminants. The loaded carbon would be disposed of with the flotation froth solids and distillation bottoms.

4.5.4 Heat Balance

Data from the laboratory development program indicated that heat was not required during solvent washing and it appeared that heat was not an important variable during flotation. However, no studies were done to establish the effect of heat in the reactor prior to flotation. In addition, heat was used in every step in the demonstration run. A compromise was used to estimate the heat required for the soil washing plant. It was assumed that a temperature of 180°F would be required in the pre-flotation reactor only.

Therefore, in the process flowsheet provisions were included to heat the pre-flotation reactor to 180°F and to recover heat from the slurry exiting the tank in a single pass heat exchanger to heat the incoming slurry. In addition, heating panels are incorporated in the reactor to add the additional heat. Overall, the heat balance calculation showed that 30×10^6 BTU's per hour would be required during very cold periods. This heat load allows for heat losses, boiler efficiency and will be used throughout the year to calculate the operating costs.

The flotation feed slurry will be maintained at 78°F.

4.6 Summary of Demonstration Run

Overall, the demonstration run showed that soil washing of Basin F material can eliminate the contaminants, both organic and inorganic and yield a final clean soil that passes or exceeds the proposed TCLP criteria set by the EPA.

During the demonstration run no problems were encountered that were insurmountable or would make this a difficult process to implement on a large scale. The required equipment is currently manufactured so no new equipment design or development is required. Reagents used are all available in large quantities.

Although some data was not obtained during the demonstration run and some problems with the calculated material balances were observed, these were resolved by the described assumptions and adjusting the mass flow and analysis. These adjustments were necessary so that material balances could be developed and equipment sized, but in no way detracts from the conclusion that this process will clean up Basin F material.

Analysis of the data, from the demonstration run, showed where some process simplifications could be made. These changes were incorporated into the process flowsheet presented in the following section.

5. BASIN F SOIL WASHING PROCESS

From the information obtained during the laboratory program, a soil washing process was developed. This process was further refined based on the analytical results and flowsheet analysis using the demonstration run data.

5.1 Introduction

Soil washing of Basin F contaminated material was studied in the laboratory with the emphasis on pesticide removal. It was initially assumed that: 1) the other organic contaminants would follow the pesticides; and 2) the inorganics would have to be eliminated by an acid wash of the organic free soil. The data from the demonstration run showed both of these pre-conceived ideas to be incorrect. The other organic contaminants could not be eliminated along with the pesticides; therefore an activated carbon adsorption unit was added to the process for the elimination of these other organic contaminants. The inorganics, principally the heavy metals were found to be concentrated and removed with the froth solids, probably as metal hydroxides. Since the anions and the cations such as chloride and sodium can not be eliminated by this method, a water bleed stream will be needed to control these contaminants.

With all these factors considered, a process flowsheet was developed along with a material balance for soil, water, pesticides, other organic, and inorganic contaminants.

The generalized process flow diagram is illustrated in Figure 3. This diagram shows the individual operational process areas and how they are interconnected by the material flows, the inputs (feed, reagents, water, etc.) and outputs of the process. The process has five output streams containing various contaminants that currently are anticipated to be disposed of by incineration. One aqueous output, free of organics, must be treated to eliminate the dissolved salts. It is anticipated that a portion of this aqueous output stream can be used, as required, as process water in the incinerator and the balance evaporated with the recovered water being returned to the soil washing plant.

FIGURE 3

GENERALIZED FLOWSHEET FOR BASIN F SOIL WASH

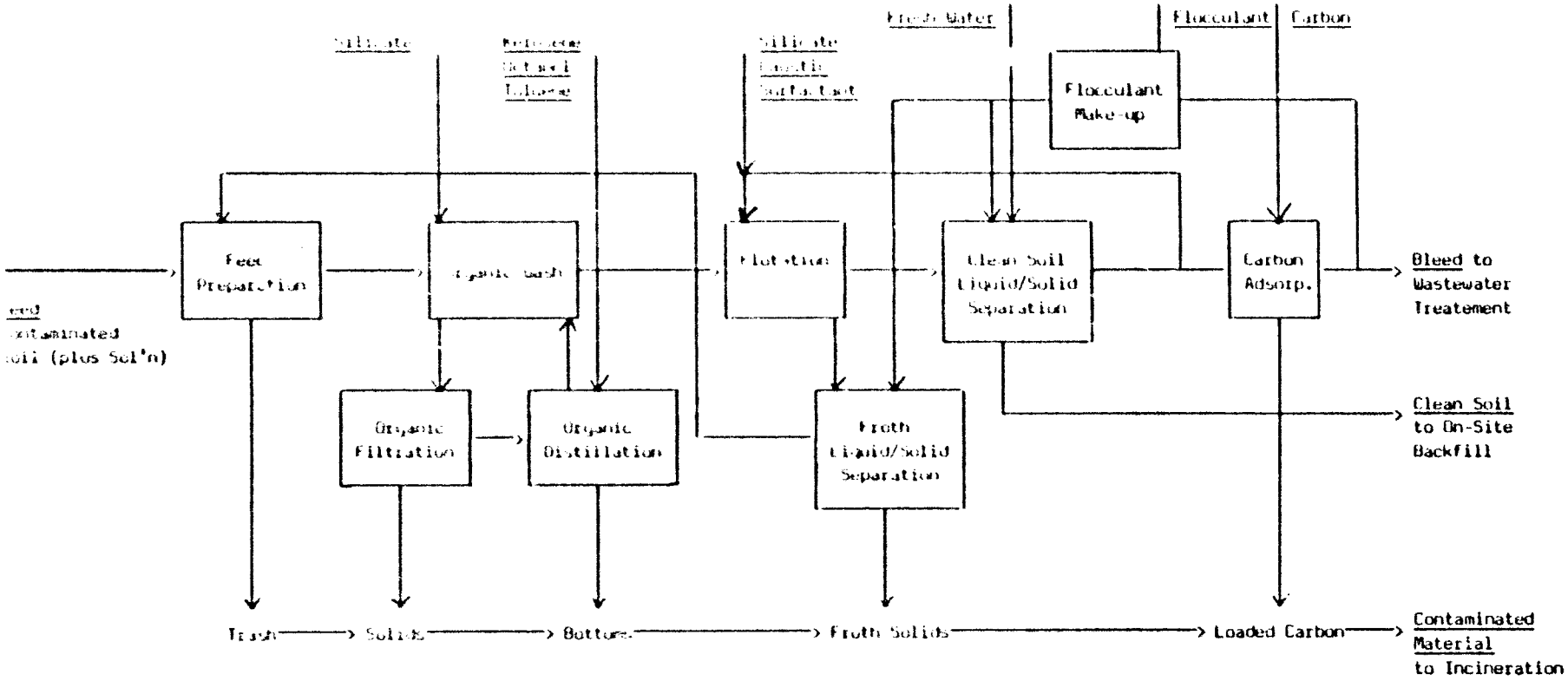

Source: MTA Remedial Resources, Inc.

Table 10 summarizes the material balance for the various constituents for the generalized flow diagram (Figure 3).

The generalized flowsheet and material balance resulted from a more detailed flowsheet which was completed to size the various pieces of equipment. While these details are not pertinent to the understanding of this report, the detailed flowsheet and material balance are included in Appendix A.

5.2 Process Description

The following is a brief discussion of what is to be accomplished in each process areas, shown in the generalized flowsheet, and how it is to be accomplished, and with what equipment.

5.2.1 Feed Preparation Area

In this area the feed is received by dump trucks at a rate of approximately 20 tons every 30 minutes and dumped onto a 3" opening fixed bar grizzly to remove large rock to protect the log washer downstream. The sticky material is washed through the grizzly using return process water. Material passing through the grizzly drops into a log washer to break up the material. The log washer levels out the feed surges. The pulp discharged from the log washer is passed over a screen to remove the coarse material. Screen and grizzle oversized material is crushed in a jaw crusher that will accept 6" rocks. The crushed material is returned to the feed end of the log washer. Screen undersized material goes to a large holding tank where it is adjusted to the correct slurry density in preparation for the organic wash section. The combined holding capacity of the log washer and feed surge tank is about 34 tons of solids or a little over 2 hours operating time.

Because of the nature of the material, sticky and plastic, it was deemed necessary to store slurry rather than excavated feed material.

TABLE 10

GENERAL MATERIAL BALANCE FOR BASIN F SOIL WASHING PROCESS

Stream	Inputs: Feed	Inputs: Reagents	Inputs: Heat	Inputs: Wash Water	Inputs: Activated Carbon	Outputs: Trash	Outputs: Organic Filter Solids	Outputs: Distillation Bottoms	Outputs: Froth Solids	Outputs: Loaded Carbon	Outputs: Bleed Water	Outputs: Clean Soil
Slurry												
TPD	962.9	22.0		418.0	1.3	0.1	3.1	8.1	107.0	2.3	82.9	1200.7
% Solids	85.4											
GPM												
Solids												
TPD	822				1.3	0.1	2.9		38.1	1.3		780.9
GPM												
Water												
TPD	123	7.4		418.0					52.1	0.9	77.4	418.0
GPM	20.5								8.7			
Kerosene												
TPD		6.8					0.2	6.6				0.0
TPM												
Pesticides												
TPD	1.5							1.5				0.0
Other Organics												
Contaminants TPD	0.3								0.2	0.1		0.0
Flocculant		0.6										0.6
Surfactant		0.6							0.4			0.2
Inorganic												
Contaminants TPD	16.1								13.8		2.3	0.0
Silicate TPD		1.0										1.0
Caustic TPD		5.6							2.4		3.2	

Reagents	
Kerosene TPD	6.6
Octanol TPD	.2 to Kerosene Above
Toluene lb/day	6.0
N Silicate cwt/day	56.0 (37% Solids) (1.8 TPD Water to Above)
Caustic TPD	11.2 (50% Sol'n) (5.6 TPD Water to Above)
Surfactant lb/day	1120
Flocculant lb/day	1230
Other	30×10^6 BTU/hr

Source: MTA Remedial Resources, Inc.

Although no coarse material (+ 1/4") was seen in the Basin F material sample received, MTARRI has provided this oversize protection and size reduction as an insurance against large material being present. The downstream process, especially the flotation section will operate better on a sized feed.

5.2.2 Organic Wash Area

The feed slurry at 20% solids is pumped to the first mix tank in the organic wash area at 596 gpm where it is mixed with 12.7 gpm of TKO (organic solvent) moving counter-current to the slurry from the second stage of organic wash. The organic/aqueous slurry mix is then pumped to a settling tank to allow the majority of the solids to settle out. From this tank the top portion of the slurry consisting of water, TKO and fine solids is pumped at 300 gpm through an oil/water coalescing separator. Leaving the separator are two streams: 1) the pesticide bearing TKO solvent; and 2) the aqueous slurry, which contains about 10 mg/l TKO. The aqueous slurry is combined with the underflow solids being pumped from the settling tank and becomes the feed for the second organic wash. The organic phase containing the pesticides is pumped to the organic filtration area.

The second organic wash tank receives the combined aqueous slurry from the first wash stage and TKO solvent from the third organic wash stage and is processed as in the first stage of organic wash.

Third and last organic wash stage receives the combined aqueous slurry from the second wash step and TKO solvent which has had the pesticides removed by distillation (plus make-up). This step operates the same as the first two. The TKO is advanced to the second stage of organic wash and the aqueous phase slurry is sent to the flotation section for additional cleanup.

5.2.3 Organic Filtration

From the first step of organic wash the pesticide containing TKO organic solvent, which contains some entrapped solids, is filtered with a recessed plate and frame filter to eliminate these solids.

This is necessary to prevent problems in the organic distillation unit. The TKO is then sent to distillation while the solids removed from the press would be and comingled with other contaminated streams from the soil washing plant and incinerated.

5.2.4 Organic Distillation

Solid free TKO organic solvent is distilled to recover the majority of the TKO organic solvent and to concentrate the pesticide in a distillation column bottoms stream. The pesticide free organic stream is returned to the soil washing plant where fresh organic reagents are added to make up for distillation losses. This TKO organic solvent is used in the third organic wash stage. The bottoms consisting of pesticides, tars, and kerosene (about 13,000 lb/day) is sent to the incinerator for destruction.

5.2.5 Flotation Area

The pesticide free slurry from the organic wash area is heated and sent to a mix tank reactor where reagents are added to free additional organic contaminants to be recovered by flotation. In this reactor, sodium silicate, caustic, and a surfactant are added and held for 30 minutes at 180°F, with high agitation.

The reacted slurry is pumped through a heat exchanger to recover heat and sent to the flotation cells. In these cells air is blown through the pulp and the hydrophobic material (organics) is collected in a froth which floats to the top and is mechanically removed. The bulk of the slurry (tails) passes through the cells and is now free of most of the organic and inorganic contaminants.

5.2.6 Froth Liquid/Solid Separation

Froth from the flotation section contains about 3% solids so water is recovered and returned to the process. Also water removal reduces the heat load in the incinerator. Water removal is accomplished by adding a non-ionic polyacrylamide flocculant reagents to increase the settling and filtering rate of the solids. Flocculated slurry is settled in a high efficiency thickener; the overflow water being

returned to the process. The underflow solids still contain a lot of water (± 80%) so this stream is filtered on a small belt press filter. The filtrate water is returned to the wash process and the solid cake (50% solids) sent to incineration.

5.2.7 Clean Soil (Tails) Liquid/Solid Separation

The slurry containing the clean soil (tails) must also be separated to recover water and produce a solid cake with no apparent free moisture. Flocculant was added to the slurry which aided in settling the solids in the thickener, and the thickener underflow was filtered. The thickener overflow and filtrate water are recycled back into the process. The clean soil filter cake is washed with fresh water to eliminate the final contaminants remaining dissolved in solution in the cake. Finally, the clean soil, containing about 65% solids is placed in a fill on-site.

5.2.8 Carbon Adsorption

Several of the organic contaminants are not completely removed by the preceding process steps. Therefore, these remaining organic contaminants are eliminated by activated carbon adsorption of a bleed stream of water from the plant. A two stage fully automated counter flow carbon adsorption system is proposed to accomplish this final removal. The water leaving this unit will be free of organics and is sent to a wastewater treatment system because of the inorganic salts still remaining in it. The carbon, when fully loaded, is sent to incineration along with the other contaminated streams from the washing plant.

5.2.9 Wastewater Treatment

Arthur D. Little is developing the wastewater treatment process. At present, about half of the water in the bleed stream will be treated to eliminate dissolved salts and returned to the soil washing plant as fresh water with the balance of the bleed stream water being used in the incineration unit.

5.2.10 Volatile Organic Control

To control emissions of volatile organics from the plant, several designs were incorporated in the process flowsheet to reduce the amount of air to be scrubbed. Where possible, process equipment will be sealed so no volatile organic will escape. Emission from equipment that cannot be sealed will be enclosed in a building which will be air swept.

Areas where volatile organic control will be required are principally in the truck unloading, screening, and filter presses. Truck unloading and screening operations will be in a building with air sweep. The organic filter press and the froth belt press will be housed in another enclosure with an air sweep. The flotation cell will need to be covered with a hood. It is reported that the flotation cells will leak at 0.1 SCFM per barrel of material processed, or in this case about 2.4 SCFM.

Overall, the volatile organic control would be small, about 100 SCFM. This assumes 5 air exchanges per hour of two buildings having a total volume of 10,000 cu. ft. plus that from the flotation cell, 70 SCFM.

5.3 Summary of Basin F Soil Washing Process

Using the data collected and numerous flowsheet/material balance studies, a processing plant was designed that will produce clean soil (as defined by the EPA's TCLP procedure) that can be returned to a fill on-site. This plant would employ equipment currently available and reagents that are readily available in large quantities.

The largest flow stream in the plant is about 800 gpm (slurry to the organic wash area) and the largest piece of equipment, other than tanks, are the four flotation cells at 1500 cu. ft. each.

Overall, a full-scale soil washing plant would be easy to operate, require a minimum of maintenance, and would have an above average on-line factor.

Instrumentation and control loops would be minimal. The major control would be tank levels.

The plant would be relatively safe to operate since neither high pressure or high temperatures are employed. The plant would be environmentally acceptable since it is temporary and all emissions, air, water, and soil would comply with current emission standards.

6. RECOMMENDATIONS FOR FUTURE WORK

If in the final evaluation of innovative technology to clean up Basin F, soil washing continues to be a viable technology both from an environmental and cost standpoint, additional work is needed to finalize the process, engineer the plant and finalize the costs for the overall project. This additional work would be in three steps: laboratory studies, pilot plant demonstration, and engineering design.

6.1 Additional Laboratory Studies

These studies would consist of two parts. First, the process would be defined in detail. For example, can toluene be eliminated from the wash solvent, and is there a better solvent system that would make the distillation system more effective in eliminating the organic contaminants. Second, data for engineering design needs to be gathered to more accurately size the equipment. Such items needed are size distribution of the feed material to a detailed analysis of flotation variables for scale-up design.

This program could be completed within three to six months. The controlling factor for completing this program will be analytical data requirements. Analytical requirements will also be the major cost to complete the work.

6.2 Pilot/Demonstration Testing

It would not be prudent to scale up the proposed process from laboratory bench-scale studies to the full-scale plant (950 tons per day) even with additional laboratory data. Therefore, a pilot/demonstration plant should be built and operated for two to four months. This small scale plant (1000 lb/hr) would be built based upon additional detailed laboratory work which would fix the flowsheet so little or no equipment arrangement testing will be needed. Therefore, this would be more a demonstration plant with only limited testing on the effect of process water recirculation, distillation and quality of the clean soil produced. All data needed for scaling up to a full-scale plant will be obtained by a months run at steady state conditions.

6.3 Engineering Optimization

During the preceding two steps, the work should be subjected to engineering optimization as the data becomes available. This would require establishing an engineering team to assist in program design prior to the start of either phase of work. During the additional data collection the engineers could evaluate data and make recommendations for changes, new tests, additional data so that upon completion of the pilot/demonstration run there would be sufficient and complete data for the final and detailed engineering of the full-scale soil washing process plant.

APPENDIX A

- Soil Wash Plant Flowsheet for Basin F Material
  - Material Balance Basin F Soil Wash Plant

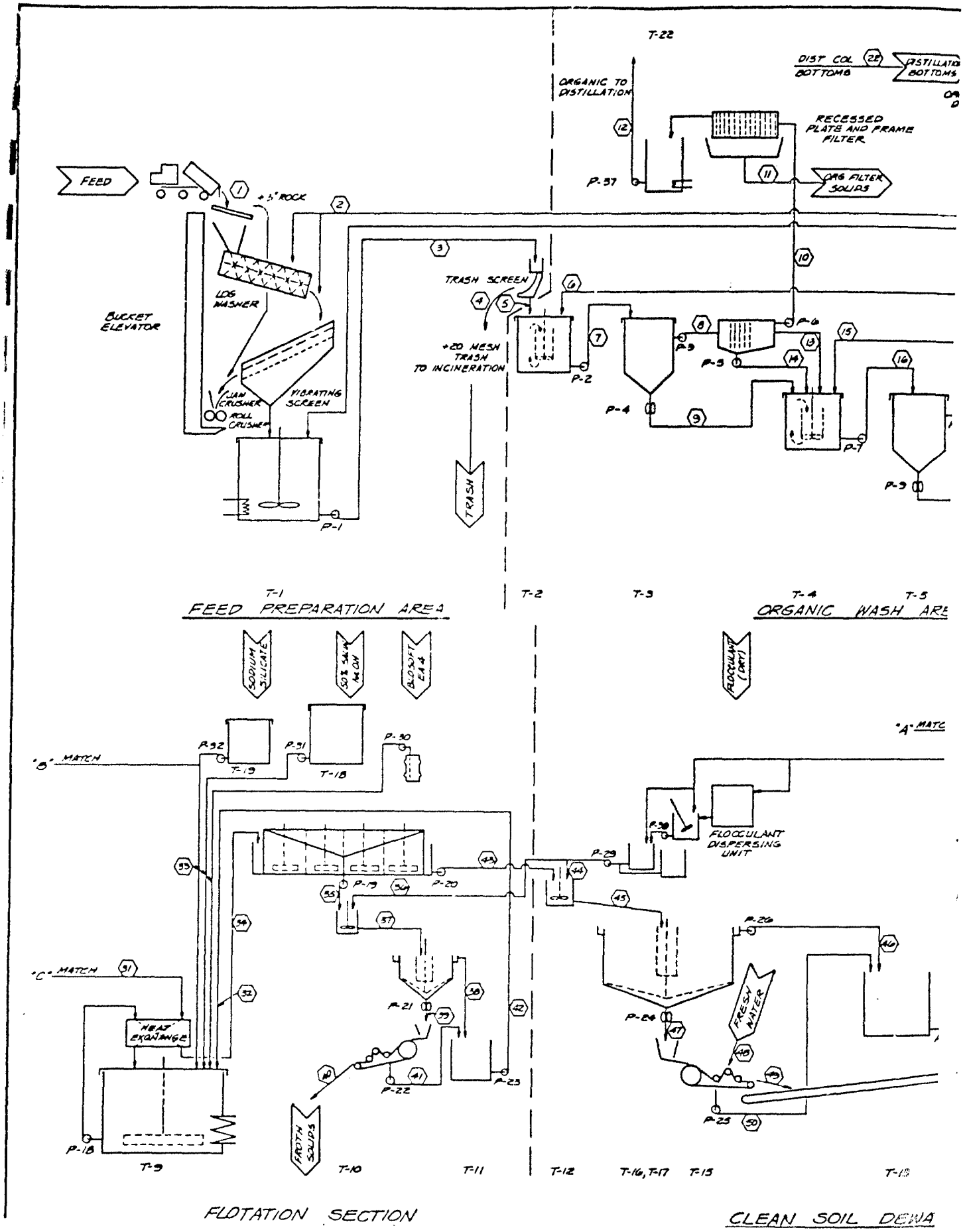
T-22
DIST COL BOTTOMS
DISTILLATION BOTTOMS
ORGANIC TO DISTILLATION
RECESSED PLATE AND FRAME FILTER
P-37
ORG FILTER SOLIDS
FEED
+3" ROCK
LOG WASHER
BUCKET ELEVATOR
JAW CRUSHER
ROLL CRUSHER
VIBRATING SCREEN
P-1
TRASH SCREEN
+20 MESH TRASH TO INCINERATION
TRASH
P-2
P-3
P-4
P-5
P-6
P-7
P-9
T-1
T-2
T-3
T-4
T-5
FEED PREPARATION AREA
ORGANIC WASH ARE
SODIUM SILICATE
SOIL SALIN MOD
BLOSOFT EA 4
FLOCCULANT (DRY)
"A" MATC
"B" MATCH
"C" MATCH
P-32
P-31
P-30
T-19
T-18
FLOCCULANT DISPERSING UNIT
P-29
P-19
P-20
P-26
P-21
P-24
P-22
P-23
P-25
HEAT EXCHANGE
FRESH WATER
FROTH SOLIDS
P-18
T-9
T-10
T-11
T-12
T-16, T-17
T-15
T-13
FLOTATION SECTION
CLEAN SOIL DEWA

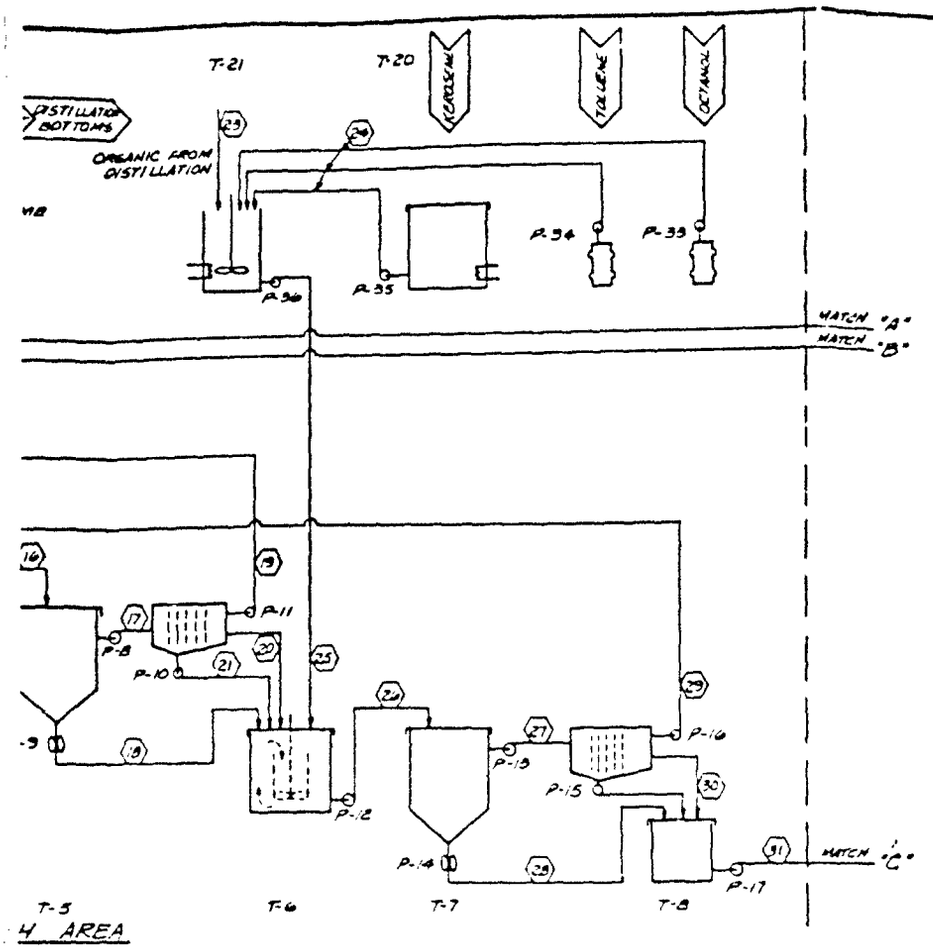

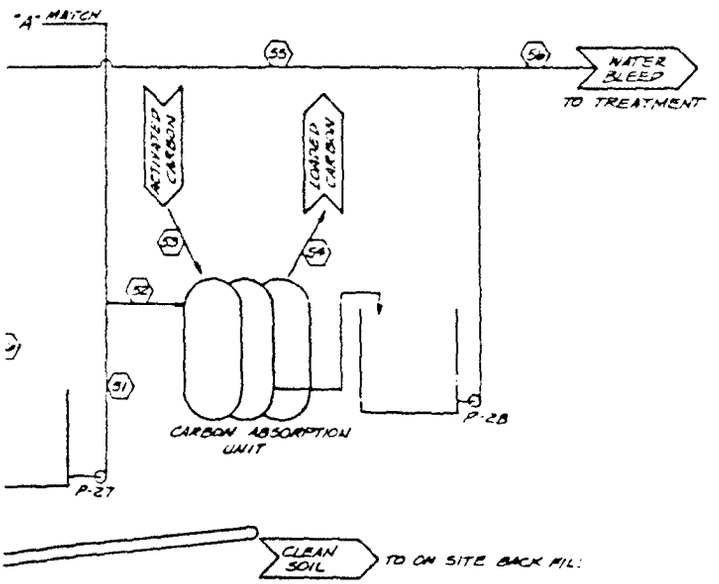

XXXXX INPUTS AND OUTPUTS

(XX) STEAM Nº

T-13 T-14

SOIL WASH PLANT FLOWSHEET FOR BASIN F MATERIAL

by MTA Remedial Resources

TABLE A

MATERIAL BALANCE BASIN F SOIL WASHING PLANT

Stream No.	1 Feed	2 Recycled Process Water	3 Feed to Organic Wash	4 Trash	5 Screened Feed to Org. Wash	6 TKO Mixture to 1st Mix Tank	7 To Settling Tank #1	8 Overflow From ST #1	9 Underflow From ST #1
Slurry									
TPD	962.9	3,147.1	4,110.0	0.1	4,111.5	64.9	4,176.4	1,903.8	2,272.6
% Solids	85.4	0.0	20.0		20.0		19.8	10.3	27.6
gpm	72.2	524.1	596.3		396.3	12.9	609.2	297.4	311.8
sp gr									
Water									
TPD	123.0	3,147.1	3,270.1		3,271.1		3,271.1	1,635.0	1,636.1
gpm	20.5	524.1	544.6		544.6		544.6	272.3	272.3
Solids									
TPD	822.0	0.0	822.0	0.1	821.9	2.9	824.8	197.1	627.7
gpm	51.7		51.7		51.7	0.2	51.9	12.4	39.5
TKO Mixture									
TPD						62.0	62.0	62.0	nil
gpm						12.7	12.7	12.7	---
Pesticides	1.5		1.5		1.5		1.5	1.5	nil
Other Organics	0.3		0.3		0.3		0.3	0.15	0.15
Inorganics	16.1		16.1		16.1		16.1	8.05	8.05
Silicate Sol'n TPD			1.6						
Solids			0.6		0.6		0.6		0.6
Sol'n			1.0 (to water)						

TABLE A (Continued)

MATERIAL BALANCE BASIN F SOIL WASHING PLANT

Stream No.	10 1st Coal. Organics Out (Filter Feed)	11 Filter Cake	12 Filtered Org. (TKO) to Dist.	13 Coalesser Aq Slurry Out	14 Second Mixer Aq Feed	15 TKO to 2nd Mixer	16 To Second Settling Tank	17 Overflow from Settling Tank #2
Slurry								
TPD	66.4	3.1	63.3	1,837.4	4,110.0	64.9	4,174.9	1,902.3
% Solids	4.4			10.6	20.0		19.8	10.4
gpm	12.4			284.5	596.3	12.9	609.2	297.4
sp gr								
water								
TPD	0.0			1,635.0	3,271.1		3,271.1	1,635.0
gpm	0.0			272.3	544.6		544.6	272.3
Solids								
TPD	2.9	2.9		194.2	821.9	2.9	824.8	197.1
gpm	0.2	0.2		12.2	51.7	0.2	51.9	12.4
TKO Mixture								
TPD	62.0	0.2	61.8	nil	nil	62.0	62.0	62.0
gpm	12.7					12.7	12.7	12.7
Pesticides	1.5	---	1.5	nil			nil	nil
Other Organics	nil			0.15	0.3		0.3	0.15
Inorganics	nil			8.05	16.1		16.1	8.05
Silicate Sol'n TPD								
Solids					0.6			
Sol'n								
Silicate							0.6	

TABLE A (Continued)

MATERIAL BALANCE BASIN F SOIL WASHING PLANT

Stream No.	18 Underflow from Settling Tank #2	19 #2 Coalesser Org. Out	20 #2 Coalesser Aq Slurry Out	21 3rd Mixer Aq Feed	22 Dist. Bottoms	23 Org. Return from Dist.	24 TKO Reagents Make up
Slurry							
TPD	2,272.6	64.9	1,837.4	4,110.0	8.1	55.2	
% Solids	27.6	4.5	10.7	20.0			
gpm	311.8	12.9	284.5	596.3			
sp gr							
Water							
TPD	1,636.1	nil	1,635.0	3,271.1			
gpm	272.3	---	272.3	544.6			
Solids							
TPD	627.7	2.9	194.2	821.9			
gpm	39.5	0.2	12.2	51.7			
TKO Mixture							
TPD	nil	62.0	nil	nil	6.6	55.2	6.8
gpm		12.7					
Pesticides	nil	nil	nil	nil	1.5	nil	
Other Organics	0.15	nil	0.15	0.3			
Inorganics	8.05	nil	8.05	16.1			
Silicate	0.6	nil		.6			
TKO Reagents							
Kerosene TPD							6.6
Octanol TPD							.2
Toluene lb/day							6. lb/day

TABLE A (Continued)

MATERIAL BALANCE BASIN F SOIL WASHING PLANT

Stream No.	25 3rd Mixer TKO Feed	26 To 3rd Settling Tank	27 Overflow from 3rd Settling Tank	28 Underflow from 3rd Settling Tank	29 3rd Coal Org. Out	30 3rd Coal Aqueous Out	31 Reactor Feed	32 Recycled Process Water
Slurry								
TPD	62.0	4,172.0	1,902.3	2,269.7	64.9	1,837.4	4,107.1	
% Solids							19.9	
gpm	12.7	609.0	297.4	311.6	12.9	284.5	596.1	
sp gr								
Water								
TPD		3,271.1	1,635.0	1,636.1	nil	1,635.0	3,271.1	1,338.1
gpm		544.6	272.3	272.3		272.3	544.6	222.8
Solids								
TPD		821.9	197.1	624.8	2.9	194.2	819.0	
gpm		51.7	12.4	39.3	0.2	12.2	51.5	
TKO Mixture								
TPD	62.0	62.0	62.0	nil	62.0	nil		
gpm	12.7	12.7	12.7		12 7			
Pesticides								
Other Organics		0.3	0.15	0.15	nil	0.15	0.3	
Inorganics		16.1	8.05	8.05	nil	8.05	16.1	
Silicate		.6		.6	nil		.6	

TABLE A (Continued)

MATERIAL BALANCE BASIN F SOIL WASHING PLANT

Stream No.	33 Reagents	34 Flotation Feed	35 Flotation Froth	36 Flocculant Sol'n (0.25%)	37 Froth Thickener Feed	38 Froth Thickener Overflow	39 Froth Thickener Underflow (Filter Feed)	40 Froth Filter Cake
Slurry								
TPD		546.0	1,351.9	12.2	1,364.1	1,182.2	181.9	107.0
% Solids		15.0						
gpm		820.2	218.4	2.0	220.4	196.9	23.5	11.1
sp gr								
Water								
TPD		4,615.6	1,297.0	12.2	1,309.2	1,182.2	127.0	52.1
gpm		768.7	216.0	2.0	218.0	196.9	21.1	8.7
Solids								
TPD		819.0	38.1	nil	38.1	nil	38.1	38.1
gpm		51.5	2.4		2.4		2.4	2.4
TKO Mixture								
TPD		nil	nil	nil				
gpm								
Pesticides		nil	nil	nil	nil	nil	nil	nil
Other Organics		0.3	0.2	nil	0.2	nil	0.2	0.2
Inorganics		16.1	13.8	nil	13.8	nil	13.8	13.8
Silicate TPD		1.0	nil	nil		nil	nil	
Caustic TPD		5.6	2.4	nil	2.4	nil	2.4	2.4
Surfactant TPD		0.6	0.4	nil	0.4	nil	0.4	0.4
Flocculant TPD				0.03	0.03	nil	0.03	0.03
Silicate Sol'n TPD	1.2							
(37%) Solids TPD	.4							
Sol'n TPD	.8							
Caustic 50% Sol'n TPD	11.2							
Solids TPD	5.6							
Sol'n TPD	5.6							

TABLE A (Continued)

MATERIAL BALANCE BASIN F SOIL WASHING PLANT

Stream No.	41 Froth Filter Filtrate	42 Process Water From Froth	43 Flotation Tails (Clean Soil)	44 Flocculant Sol'n (0.25%)	45 Tailings Thickener Feed	46 Tailings Thickener Overflow	47 Tailings Thickener Underflow	48 Wash Water Tailings Filter
Slurry								
TPD	74.9	1,257.1	4,106.3	250.5	4,356.8	2,618.2	1,738.6	418.0
% Solids								
gpm	12.4	209.3	601.8	41.6	643.4	435.4	208.0	69.6
sp gr								
Water								
TPD	74.9	1,257.1	3,318.6	249.9	3,568.5	2,614.1	954.4	418.0
gpm	12.4	209.3	552.7	41.6	594.3	435.4	158.9	69.6
Solids								
TPD	nil	nil	780.9	nil	780.9	nil	780.9	nil
gpm			49.1		49.1		49.1	
TKO Mixture								
TPD								
gpm								
Pesticides	nil	nil	nil	nil	nil			
Other Organics	nil	nil	0.1	nil	0.1	0.1	nil	
Inorganics	nil	nil	2.3	nil	2.3	1.7	0.6	
Silicate TPD	nil	nil	1.0	nil	1.0	nil	1.0	
Caustic TPD	nil	nil	3.2	nil	3.2	2.3	0.9	
Surfactant TPD	nil	nil	0.2	nil	0.2	nil	0.2	
Flocculant TPD	nil	nil	nil	0.6	0.6	nil	0.6	

TABLE A (Continued)

MATERIAL BALANCE BASIN F SOIL WASHING PLANT

Stream No.	49 Tailing Filter Cake	50 Tailing Filter Filtrate	51 Tailing Process Water	52 Carbon Column Feed	53 Fresh Act. Carbon	54 Loaded Carbon	55 Flocculant Make up Water	56 Bleed Water
Slurry								
TPD	1,200.7	955.9	3,574.1	345.0	1.3	2.3		82.9
% Solids	65.1			56.5				
gpm	118.7	158.9	594.3					
Sp gr								
Water								
TPD	418.0	954.4	3,568.5	340.4		0.9	262.1	77.4
gpm	69.6	158.9	594.3	56.5			43.6	12.9
Solids								
TPD	780.9	nil	nil					
gpm	49.1							
TKO Mixture								
TPD								
gpm								
Pesticides	nil							
Other Organics	nil	nil	0.1	0.1		0.1		
Inorganics	nil	0.6	2.3	2.3				2.3
Silicate TPD	1.0	nil	nil	nil				
Caustic TPD	nil	0.9	3.2	3.2				3.2
Surfactant TPD	0.2	nil	nil	nil				
Flocculant TPD	0.6	nil	nil	nil				
Carbon TPD					1.3	1.3		
						Loading 0.077/g g Carbon		TDS 6.63%

Source: MTA Remedial Resources, Inc.

DISTRIBUTION LIST

Defense Technical Information Center Cameron Station Alexandria, Virginia 22314	12
Defense Logistics Studies Information Exchange U.S. Army Logistics Management Center Fort Lee, Virginia 23801	2
Commander U.S. Army Toxic and Hazardous Materials Agency Attn: AMXTH-CO-P Aberdeen Proving Ground, Maryland 21010-5401	2
Commander U.S. Army Toxic and Hazardous Materials Agency Attn: AMXTH-TE-D Aberdeen Proving Ground, Maryland 21010-5401	14