(2)

AD-A242 224

NAVSWC TR 91-86

ZEUS USER MANUAL
"REAL GAS" EFFECTS

BY F. J. PRIOLO AND A. B. WARDLAW, JR

RESEARCH AND TECHNOLOGY DEPARTMENT

6 MAY 1991

Approved for public release; distribution is unlimited.

91-14550

NAVAL SURFACE WARFARE CENTER

Dahlgren, Virginia 22448-5000 • Silver Spring, Maryland 20903-5000

NAVSWC TR 91-86

ZEUS USER MANUAL
"REAL GAS" EFFECTS

BY F. J. PRIOLO AND A. B. WARDLAW, JR
RESEARCH AND TECHNOLOGY DEPARTMENT

6 MAY 1991

A-1

Approved for public release, distribution is unlimited.

NAVAL SURFACE WARFARE CENTER
Dahlgren, Virginia 22448-5000 • Silver Spring, Maryland 20903-5000

INSPECTED 4

FOREWORD

The extension and application of the ZEUS code to high, hypersonic Mach numbers by incorporating high-temperature equilibrium air effects is described. The ZEUS code is a space-marching Euler solver. It uses an automatic multiple zone grid generation technique and a finite volume, second-order Godunov scheme for steady supersonic flow. High-temperature effects are achieved by using curve fits of the thermodynamic properties of equilibrium air. Sample calculations for a sharp cone and a blunt nosed cylinder are provided.

This work was supported by the Naval Weapons Center at China Lake.

CARL W. LARSON, Head
Physics & Technology Division

CONTENTS

Chapter		Page
1	INTRODUCTION	1
2	HIGH-TEMPERATURE EQUILIBRIUM AIR	3
2.1	COMPUTED THERMODYNAMIC PROPERTIES	3
2.2	EFFECTIVE GAMMA	4
3	NUMERICAL PROCEDURE	5
3.1	GOVERNING EQUATIONS	5
3.2	DECODING	6
3.3	NEW DENSITY	7
3.4	OBLIQUE SHOCKS	9
3.5	EXPANSION WAVES	10
3.6	SHOCK ANGLE	10
4	ZEUS INPUT FILE (TAPE 5)	13
4.1	INTEGRATION CONTROL	13
4.2	BOUNDARY CONDITIONS	14
4.3	OUTPUT CONTROL	15
4.4	AERODYNAMIC DATA	16
4.5	SEPARATION MODELING	16
4.6	GAS TYPE	17
4.7	UNITS	17
4.8	INITIAL PLANE DATA	17
4.9	MESH CLUSTERING	18
5	PRE-PROCESSING PROGRAMS	19
5.1	BLUNT2	19

CONTENTS (Cont.)

Chapter		Page
6	SAMPLE CASES	21
6.1	HYPERSONIC SHARP CONE	21
6.1.1	Geometry	21
6.1.2	ZEUS Input File — I	23
6.1.3	ZEUS Input File — II	27
6.1.4	Results	31
6.2	HYPERSONIC BLUNT NOSE CYLINDER	31
6.2.1	Geometry	31
6.2.2	START File	33
6.2.3	ZEUS Input File	34
6.2.4	Results	38
6.3	HYPERSONIC AIRCRAFT	39
6.3.1	Geometry — Nose Section	39
6.3.2	Zeus Input File — Nose Section	41
6.3.3	Geometry — Wing Section	45
6.3.4	CONVERT Input File	49
6.3.5	Zeus Input File — Wing Section	50
6.3.6	Results	54
6.4	CONCLUDING REMARKS	54
REFERENCES		65
APPENDIX		
A	ZEUS INPUT FILE	A-1
B	SAMPLE CASE OUTPUT	B-1
B.1	HYPERSONIC SHARP CONE	B-1
B.1.1	ZEUS Output — II	B-1
B.2	HYPERSONIC BLUNT NOSE CYLINDER	B-6
B.2.1	BLUNT2 Output	B-6
B.2.2	ZEUS Output	B-11

ILLUSTRATIONS

Figure		Page
1	CARTESIAN AND CYLINDRICAL COORDINATE SYSTEM FOR ZEUS, A SPACE-MARCHING EULER SOLVER	55
2	CONTROL VOLUME NOMENCLATURE	56
3	FLOW DISCONTINUITIES IN THE CASE $\frac{V_-}{a} > 1$ (A.) OBLIQUE SHOCK WAVE (B.) EXPANSION FAN	57
4	SURFACE (A.) PRESSURES (B.) DENSITIES (C.) TEMPERATURES ON CONES AT AN ALTITUDE OF 100,000 FT. A COMPARISON BETWEEN CALORICALLY PERFECT AND EQUILIBRIUM AIR RESULTS FOR ZEUS AND HUDGINS[15] COMPUTATIONS	58
5	COMPUTED PRESSURE CONTOURS FOR A SHARP CONE WITH A 25° HALF-ANGLE AT MACH 20, AN INCIDENCE OF 20°, AND AN ALTITUDE OF 100,000 FT. RESULTS ARE COMPARED BETWEEN (A.) EQUILIBRIUM AIR AND (B.) CALORICALLY PERFECT	59
6	DENSITY CONTOURS FOR A HYPERSONIC SPHERICALLY BLUNT NOSED CYLINDER AT MACH 20 AND AN INCIDENCE OF 0° FOR (A.) CALORICALLY PERFECT AND (B.) EQUILIBRIUM CHEMICALLY REACTING AIR. RESULTS ARE COMPARED WITH COMPUTATIONS OF ZEUS AND PALMER[16]	60
7	TEMPERATURE CONTOURS FOR A HYPERSONIC SPHERICALLY BLUNT NOSED CYLINDER AT MACH 20 AND AN INCIDENCE OF 0° FOR (A.) CALORICALLY PERFECT AND (B.) EQUILIBRIUM CHEMICALLY REACTING AIR. RESULTS ARE COMPARED WITH COMPUTATIONS OF ZEUS AND PALMER[16]	61
8	COMPUTED DENSITY CONTOURS FOR A HYPERSONIC SPHERICALLY BLUNT NOSED CYLINDER AT MACH 20 AND AN INCIDENCE OF 20° FOR EQUILIBRIUM AIR AT AN AXIAL STATION 9.5 DIAMETERS DOWNSTREAM	62

ILLUSTRATIONS (CONT.)

Figure | Page

9 COMPARISON OF COMPUTED PRESSURE PROFILES FOR EQUILIBRIUM AIR ON THE WINDWARD SYMMETRY PLANE AT MACH 24.5, AN INCIDENCE OF 1° AND Z = 108.67 FT FOR ZEUS AND THE PNS SOLUTIONS OF KORTE[17] 63

10 COMPARISON OF COMPUTED PRESSURE CONTOURS FOR EQUILIBRIUM AIR AT MACH 24.5, AN INCIDENCE OF 1° AND Z = 108.67 FT FOR ZEUS AND THE PNS SOLUTIONS OF KORTE[17] 64

CHAPTER 1

INTRODUCTION

This report describes the extension and application of the ZEUS code to high, hypersonic Mach numbers by incorporating high-temperature equilibrium air or "real gas" effects. This approach is important for accurate aerodynamic predictions in support of atmospheric reentry vehicles with high maneuverability and future hypersonic weapons. The program employs an automatic multiple zone grid generation technique which is particularly suited to describing missile-type geometries in supersonic flight. The ZEUS code,[1-9] whose numerical algorithm is well described in References 1–2 and applications in References 2–9, is a supersonic/hypersonic space-marching Euler solver which is capable of computing internal as well as external flows. The present report provides recent modifications to the program (described in Reference 2) for real gas effects and user instructions for its application.

The ZEUS code uses a zonal, finite volume, second order Godunov scheme to integrate the Euler equations. The computation proceeds for an initial data plane on which the flow field is specified, as shown in Figure 1, and marches in a streamwise direction until the end of the region of interest is encountered. In the case of a missile, the initial data plane is taken near the nose of the missile, and the flow field on this plane can be defined using conical flow, a blunt body solution, or uniform flow. The calculation is marched down the axis of the missile until the base of the missile is encountered. Throughout the computation, the flow field must remain supersonic everywhere.

At high flight Mach numbers and altitudes, computation of the flow field in local chemical and thermodynamic equilibrium is necessary to account for the high-temperature or real gas effects. These high temperature effects are taken into account by using the curve fits of Scrinivansan et. al.[10] to compute the thermodynamic properties of equilibrium air as well as modifying parts of the ZEUS code.

CHAPTER 2

HIGH-TEMPERATURE EQUILIBRIUM AIR

The computation of missiles or atmospheric reentry bodies at high hypersonic Mach numbers and high altitudes requires the flow field to be calculated in local thermodynamic and chemical equilibrium. To solve an equilibrium flow field, two thermodynamic state variables (such as T and p) need to be expressed in terms of two other state variables (such as ρ and h).[11] The high-temperature thermodynamic properties of equilibrium chemically reacting air are obtained from statistical thermodynamics as discussed in Reference 11. To simplify matters, tables of thermodynamic properties of high-temperature air have been constructed (see Hilsenrath and Klein[12]) which can be used in numerical flow field calculations via a "table look-up" procedure which interpolates between discrete entries from the tables. Furthermore, polynomial curve fits of the tabulated thermodynamic data for equilibrium air as discussed in Reference 10 have been correlated for computational convenience and efficiency. This latter method is the approach implemented in the ZEUS code.

2.1 COMPUTED THERMODYNAMIC PROPERTIES

The tabulated thermodynamic properties of equilibrium air are curve fit as discussed in Refence 10 and are implemeted in ZEUS through the equilibrium air subroutines used in NASA Langley's CFL3DE program,[13] a time-dependent Navier-Stokes program. Each subroutine correlates different properties. For instance, subroutine:

- TGAS1 — computes p,a,T as a function of e and ρ.
- TGAS2 — computes s as a function of e and ρ.
- TGAS4 — computes h as a function of p and ρ.
- TGAS5 — computes ρ as a function of p and s.
- TGAS7 — computes a as a function of p and s.

where, p = pressure, ρ = density, T = temperature, e = internal energy, h = enthalpy, s = entropy, and a = sound speed.

2.2 EFFECTIVE GAMMA

It is convenient to define an "effective gamma" as follows:

$$\Gamma = 1/\left(1 - \frac{p}{\rho h}\right) \tag{1}$$

This is used in decoding the flow variables as discussed in Section 3.2.

CHAPTER 3

NUMERICAL PROCEDURE

3.1 GOVERNING EQUATIONS

Using the notation and coordinates of Figure 2, control volume mass and momentum conservation equations are given by:

$$\bar{U}^{n+1}_{i,j} = \bar{U}^{n}_{i,j} - \bar{F}_{i+\frac{1}{2},j} + \bar{F}_{i-\frac{1}{2},j} - \bar{F}_{i,j+\frac{1}{2}} + \bar{F}_{i,j-\frac{1}{2}} \tag{2}$$

where:

$$\bar{U}^{n}_{i,j} = A^{n}_{i,j} \begin{bmatrix} \rho w \\ \rho w^2 + p \\ \rho w u \\ \rho w v \end{bmatrix}_{i,j} = \begin{bmatrix} U_1 \\ U_2 \\ U_3 \\ U_4 \end{bmatrix}_{i,j} \tag{3}$$

$$\bar{F}_{i+\frac{1}{2},j} = \begin{bmatrix} \rho V \\ \rho w V + n_z p \\ \rho u V + n_x p \\ \rho v V + n_y p \end{bmatrix}_{i+\frac{1}{2},j} \tag{4}$$

$$V = \bar{n}_{i+\frac{1}{2},j} \bullet (u, v, w)_{i+\frac{1}{2},j} \tag{5}$$

Here, $\bar{U}$ is the flux in the z-direction which passes through the shaded cell ends while the $\bar{F}$'s are the fluxes associated with the remaining cell edges. The A's are the cell edge areas, $\bar{n}$ is the vector normal to the cell, and u, v, w are the cartesian velocity components. Equations (2) – (5) are closed using the constant total enthalpy condition

$$H_0 = h + \frac{1}{2}(u^2 + v^2 + w^2) \tag{6}$$

where $h=h(p,\rho)$.

3.2 DECODING

After the corrector step, the flow variables ρ, p, u, v, w must be determined or decoded from the computed conservative variables U_1 , U_2 , U_3 , U_4, as displayed in Equation (3). This is done using an iterative procedure similar to that used by Solomon et. al.[14]

By definition, we have

$$u = U_3/U_1 \tag{7}$$

$$v = U_4/U_1 \tag{8}$$

$$p = (U_2 - U_1 w)/A \tag{9}$$

$$\rho = U_1/w/A \tag{10}$$

Substitute Equations (7) – (10) into Equation (6) which yields:

$$h = \frac{1}{2}\left[H' - w^2\right] \tag{11}$$

where:

$$H' = 2H_0 - \frac{U_3^2 + U_4^2}{U_1^2} \tag{12}$$

Substitue Equations (9–11) into Equation (1) to get a quadratic for w. The root of this equation corresponding to $w^2 > \Gamma p/\rho$ is

$$w = \frac{U_2\left[\Gamma + \sqrt{1 - \Phi}\right]}{U_1[\Gamma + 1]} \tag{13}$$

where:

$$\Phi = (\Gamma^2 - 1)\left[H'\left(\frac{U_1}{U_2}\right)^2 - 1\right] \tag{14}$$

In the case of a perfect gas, $\Gamma = \gamma$, which is known, and Equations (7) – (10), and (13) provide the desired decoding formulas. For a more general gas (such as equilibrium air) where $h=h(p,\rho)$ is curve fit to thermodynamic data, Γ is not known a-priori, and the decoding can not be done in closed form. In this case, the decoding is done by solving the nonlinear equation

$$h(p,\rho) - \frac{1}{2}\left[H' - w^2\right] = 0 \tag{15}$$

for w. In the code, Equation (15) is solved iteratively using the Secant Method. This is done in the following manner:

(a.) Guess a value of Γ_1 from p, ρ, h computed in the predictor step and substitute Γ_1 into Equation (13) to get w.

(b.) Decode values of u, v and compute new values of p, ρ with the value of w computed in Step (a.)

(c.) Solve Equation (15) by using the equilibrium air subroutine, TGAS4, for $h(p,\rho)$. This gives the first error estimate, $f(\Gamma_1)$.

(d.) Use the values of p, ρ, h from Step (b.) to compute second guess value of Γ_2 using Equation (1).

(e.) Use Γ_2 to compute new values of w from Equation (13) and p, ρ from Equations (9) and (10) which gives a new value of $h(p,\rho)$ using subroutine TGAS4.

(f.) Solve Equation (15) using the new values of w, p, ρ, h to get second error estimate, $f(\Gamma_2)$.

(g.) Compute new value of Γ_3 by

$$\Gamma_3 = \frac{\Gamma_1 f(\Gamma_2) - \Gamma_2 f(\Gamma_1)}{f(\Gamma_2) - f(\Gamma_1)} \tag{16}$$

(h.) Use Γ_3 to compute new values of w, p, ρ, h as in Step (e.) and solve Equation (15) to get $f(\Gamma_3)$.

(i.) If $\left|\frac{f(\Gamma_3)}{h(p,\rho)}\right| < 10^{-3}$ is true, then the solution for w is converged. If it is false, then go to Step (e.) and continue until converged.

3.3 NEW DENSITY

The predictor step uses Euler's equations in non-conservation form to predict the properties of u, v, w, and p. For a perfect gas computation, the known total enthalpy constraint is used to determine ρ. For equilibrium air, the density must be obtained by numerically solving the differential equation for ρ.

To construct the differential equation, $d\rho$, the equation for total enthalpy is written as

$$H_0 = h(p,\rho) + \frac{q^2}{2} \tag{17}$$

where q is the velocity. Rearranging Equation (17) for $h(p,\rho)$ gives

$$h(p,\rho) = H_0 - \frac{q^2}{2} \tag{18}$$

Casting Equation (18) in terms of differentials which gives

$$\left(\frac{\partial h}{\partial p}\right)_\rho dp + \left(\frac{\partial h}{\partial \rho}\right)_p d\rho = -q\,dq \tag{19}$$

and rearranging Equation (19) for $d\rho$ yields

$$d\rho = \frac{\left[-qdq - \left(\frac{\partial h}{\partial p}\right)_\rho dp\right]}{\left(\frac{\partial h}{\partial \rho}\right)_p} \tag{20}$$

Using the following finite difference expressions for the differentials, Equation (20) can be computed in closed form:

$$\left(\frac{\partial h}{\partial \rho}\right)_p = \frac{h(p,\rho) - h(p,\rho + \Delta\rho)}{\Delta\rho} \tag{21}$$

$$\left(\frac{\partial h}{\partial p}\right)_\rho = \frac{h(p,\rho) - h(p + \Delta p,\rho)}{\Delta p} \tag{22}$$

$$dp = p_2 - p_1 \tag{23}$$

$$d\rho = \rho_2 - \rho_1 \tag{24}$$

$$dq = q_2 - q_1 \tag{25}$$

$$\Delta p = .001 p_1 \tag{26}$$

$$\Delta\rho = .001\rho_1 \tag{27}$$

Equations (21) – (27) are substituted into Equation (20) and solved for the new density, ρ_2 with p_1, ρ_1, q_1, p_2, q_2, h given. Here the values of h are determined using the equilibrium air subroutine, TGAS4. This yields the following expression for ρ_2

$$\rho_2 = \rho_1 - \left\{ \frac{q_1(q_2 - q_1) + \left[\frac{h(p_1,\rho_1) - h(1.001p_1,\rho_1)}{.001p_1}\right](p_2 - p_1)}{\left[\frac{h(p_1,\rho_1) - h(p_1,1.001\rho_1)}{.001\rho_1}\right]} \right\} \tag{28}$$

where

$$q_1 = \sqrt{u_1^2 + v_1^2 + w_1^2}$$
$$q_2 = \sqrt{u_2^2 + v_2^2 + w_2^2} \tag{29}$$

3.4 OBLIQUE SHOCKS

The inviscid boundary conditions at a surface require that the flow be tangent to the surface. ZEUS requires that the velocity vector be turned through either a shock or an expansion wave to align the velocity with the surface as illustrated in Figure 3. To solve for flow properties across an oblique shock wave in equilibrium air, a closed form solution does not exist. Refering to Figure 3(a), the following energy equation is solved iteratively:

$$u_-^2 + 2h_-(p_-, \rho_-) = u_+^2 + 2h_+(p_+, \rho_+) \tag{30}$$

where for an oblique shock,

$$\begin{aligned} u_- &= V_- \sin\beta \\ u_+ &= V_- \cos\beta \, \frac{(1 - \tan\theta \cot\beta)}{(\tan\theta + \cot\beta)} \\ \rho_+ &= \rho_- u_- / u_+ \\ p_+ &= \rho_- u_-(u_- - u_+) + p_- \\ \theta &= \cos^{-1}\left[(\vec{n}_+ \cdot \vec{n}_-)/|\vec{n}_+||\vec{n}_-|\right] \end{aligned} \tag{31}$$

and β is the shock wave angle to be determined. Here the $-$ and $+$ subscripts denote the upstream and downstream conditions, respectively. V_- is the upstream velocity component tangent to the surface, u_- and u_+ are the velocity components normal to the shock, $\vec{n}_-$, $\vec{n}_+$ are the surface normal vectors, p_-, p_+ are the pressures, and ρ_-, ρ_+ are the densities, and θ is the deflection angle.

To solve Equations (30) – (31), the Secant Method iterative procedure is implemented in a similar fashion as in Section 3.2 for decoding. Computations proceed by initializing

$$\sin\beta > \max\left[\sin\theta, \sin(1/M_-)\right] \tag{32}$$

where M_- is the upstream Mach number. The error is estimated using Equation (30) as follows:

$$f(\sin\beta) = u_-^2 + 2h_-(p_-, \rho_-) - u_+^2 - 2h_+(p_+, \rho_+) \tag{33}$$

The value of $\sin\beta$ is increased until the relative error is less than 10^{-3} or

$$\left| \frac{f(\sin \beta)}{h_+(p_+, \rho_+)} \right| < 10^{-3} \tag{34}$$

This results in the final properties behind the shock, p_+, ρ_+, V_+ for which the velocity is tangent to the surface.

3.5 EXPANSION WAVES

To satisfy the inviscid boundary condition at a surface, often the velocity vector must be turned through a Prandtl-Meyer expansion to align the flow tangent to the surface. As in the case for oblique shock turns, a closed form solution does not exists for equilibrium air conditions; therefore, the expansion must be computed iteratively.

Referring to Figure 3(b), the equation for a centered expansion can be written in differential form:

$$\frac{dp}{d\phi} = \frac{-\rho q^2}{\sqrt{q^2/a^2 - 1}} \qquad for \;\; 0 \leq \phi \leq \theta \tag{35}$$

where

$$\begin{aligned} q^2 &= 2H_0 - 2h(p, \rho) \\ s_- &= s(p_-, \rho_-) \\ \rho &= \rho(s_-, p) \\ a^2 &= a^2(p, \rho) \\ \theta &= \cos^{-1}\left[(\vec{n}_+ \cdot \vec{n}_-)/|\vec{n}_+||\vec{n}_-|\right] = turn \;\; angle \end{aligned} \tag{36}$$

The – and + subscripts represent upstream and downstream conditions, respectively. The unsubscripted variables are integrated values. Computations proceed by integrating Equations (35) – (36) on the interval $0 \leq \phi \leq \theta$ subject to the initial conditions $p = p_-$ and $q = V_-$ at ϕ=0 using the second-order Improved Euler method. Subdivisions are every .377°. The final results at $\phi=\theta$ give $p_+ = p_{\phi=\theta}$, $\rho_+ = \rho_{\phi=\theta}$, $V_+ = q_{\phi=\theta}$.

3.6 SHOCK ANGLE

The computation of the bow shock angle is determined using information along the positive characteristic at the cell adjacent to the bow shock. The shock angle is

$$\beta_+ = \tan^{-1}\left[\theta + \frac{1}{\sqrt{M^2 - 1}}\right] \tag{37}$$

or in terms of velocities

$$\beta_+ = \tan^{-1}\left[\frac{V_n}{w} + \frac{1}{\sqrt{\frac{V_n^2+w^2}{a^2} - 1}}\right]_{av} \tag{38}$$

Here, the variables are Roe averaged in the following manner:

$$V_{n_{av}} = \frac{\left(\rho_+^{\frac{1}{2}} V_{n+} + \rho_-^{\frac{1}{2}} V_{n-}\right)}{\rho_+^{\frac{1}{2}} + \rho_-^{\frac{1}{2}}}$$

$$w_{av} = \frac{\left(\rho_+^{\frac{1}{2}} w_+ + \rho_-^{\frac{1}{2}} w_-\right)}{\rho_+^{\frac{1}{2}} + \rho_-^{\frac{1}{2}}}$$

$$a_{av}^2 = (\Gamma_{av} - 1)\left[H_{0_{av}} - \frac{1}{2}(V_{n_{av}}^2 + w_{av}^2)\right] \tag{39}$$

$$H_{0_{av}} = \frac{\left(\rho_+^{\frac{1}{2}} H_{0+} + \rho_-^{\frac{1}{2}} H_{0-}\right)}{\rho_+^{\frac{1}{2}} + \rho_-^{\frac{1}{2}}}$$

$$\Gamma_{av} = \frac{\left(\rho_+^{\frac{1}{2}} \Gamma_+ + \rho_-^{\frac{1}{2}} \Gamma_-\right)}{\rho_+^{\frac{1}{2}} + \rho_-^{\frac{1}{2}}}$$

The + and − subscripts represent properties in the free stream and at the cell adjacent to the shock, respectively. V_n is the velocity component normal to the cell edge; w is the velocity component in the streamwise direction; a is the speed of sound; H_0 is the total enthalpy; and Γ is the effective gamma.

CHAPTER 4

ZEUS INPUT FILE (TAPE 5)

The ZEUS input file, as described in Reference 2, allows the user to:

1. Control the manner in which ZEUS integrates the Euler equations;
2. Select boundary condition options;
3. Specify the amount of output generated;
4. Choose the separation model;
5. Select the type of initial data to be used;
6. Specify mesh size and clustering.

The set up commands and options for the current version of ZEUS include the items outlined above from Reference 2. However, two more options are included which are inserted between items 4 and 5 above in the input file. They are:

- Selection of the gas type;
- Specification of the dimensional units.

Moreover, two input parameters are added to item 1 and one parameter to item 3 above. The complete input file is listed in Appendix A. The following sections give a description of the input variables, in order of their occurrance in file **zeuse.da**.

4.1 INTEGRATION CONTROL

ZETAEND — Terminate the calculation when ZETA ≥ ZETAEND. The last step size is adjusted to place the final integration plane at ZETAEND.
KEND — Terminate the calculation after executing KEND steps. If the initial step number is STEPI, the termination step number if STEPI+KEND.
FCFL — Step size safety factor. The step size is determined by multiplying the allowed step size, based on the CFL condition, by FCFL. For values of FCFL > 1, the calculation should be unstable. A value of .9 is typically used. Program abort can sometimes be rectified by using a smaller value. Also, oscillations in surface properties may be reduced by decreasing FCFL.

XKI — Limiting constant for cells not adjacent to a surface. The recommend value for this quantity is 1, however, XKI may be assigned any value between 2 and 0. Increasing XKI promotes increased accuracy and sharper shock capturing but may lead to oscillations in the solution. If XKI = 0, the scheme reduces to the first order Godunov method.

IAPR — The Davis approximate Riemann problem is applied if IAPR = 0, while the complete Riemann problem is solved if IAPR = 1. On most computing systems IAPR = 0 is faster, more robust and gives nearly the same results as IAPR = 1. However, IAPR = 0 is more dissipative, and differences between these solvers can be noted in solutions featuring strong crossflow shocks. For equilibrium air (IGAS = 1), IAPR must be set to 0.

ISHFLUX — The flux at the cell edge next to the bow shock is determined using the full Riemann problem if ISHFLUX = 0 or the free stream conditions if ISHFLUX = 1. For most cases, a value of 0 can be used; however, use 1 if wiggles occur at the shock.

ISHANG — The bow shock angle is determined using information from the full Riemann problem if ISHANG = 0 or determined from Roe averaged variables as described in Section 3.6 if ISHANG = 1. In general, a value of 0 can be used; however, for equilibrium air a value of 1 is recommended.

4.2 BOUNDARY CONDITIONS

NXKE — Number of edges at which the default limiter setting will not be applied. Cells adjacent to a surface use different limiter values than the interior point setting of XKI. Increasing the limiter values improve the solution accuracy in smooth flow regions, but can lead to surface pressure oscillations near shocks and fin edges. Different limiter values can be selected for each edge of each zone. If NXKE = 0, default limiter values will be applied at all edges. These are 2 on edges 1 and 3 and 0 on edges 2 and 4. The presumption here is that a smooth flow, such as that generated by a tangent ogive body, will occur near edges 1 or 3. However, shocks or expansions may occur near edges 2 and 4 as a consequence of surface slope discontinuities and fin edges. If these default values do not fit the case under consideration, set NXKE to the number of edges at which default values are to be changed. List the zone number, edge number, and limiter value for each edge which is to be changed at the indicated position in the input file.

NSUR — Number of edges which do not feature the default surface type. The user has the latitude of specifying the type of surface which occurs on each zone edge. The possibilities are:

0 — interior; do not apply boundary conditions;
1 — solid surface; apply tangent flow boundary conditions;
2 — free stream boundary; cell value fixed at free stream conditions;
3 — fitted shock or expansion.

If NSUR = 0, edge 1 will be type 1 and edge 3 will be type 1 unless a shock is being fitted (i.e., ISHOCK = 1). In this case edge 3 will automatically be set to 3. If edge 3 is defined outside the bow shock in the free stream, set to 2. Edges 2 and 4 will be set to 0, however, a surface will be assumed to occur for $\omega < s < \Omega$. To change these options, set NSUR to the number of

edges to be altered and for each edge list zone number, edge number and option number. Insert this list at the indicated position in the input file.
DFAC — At locations where local Mach number is too small to allow the flow to be turned parallel to the wall, the turn angle is diminished. This is accomplished by computing the maximum turn angle associated with this Mach number. The turn angle to be used in the calculation is calculated by multiplying this maximum angle by DFAC. DFAC should be set between 0 and 1 and is typically taken to be .9.

4.3 OUTPUT CONTROL

Tape 6 (output file) The first and last crossflow planes are always written to tape 6.

IPRINT — Print the crossflow plane if the step number is evenly divisible by IPRINT. If IPRINT = 100, the crossflow plane will be printed at step 100, 200, etc. The crossflow plane at the first and last step of the calculation will also be printed.
NSKIP — The crossflow plane output only contains those N planes which are evenly divisible by NSKIP. Set NSKIP to 1 if all n planes are to be printed.
MSKIP — The crossflow plane output only contains those M planes which are evenly divisible by MSKIP. Set MSKIP to 1 if all m planes are to be printed.
ISKIP — Print the step size if the step number is evenly divisible by ISKIP. Set ISKIP to 1 if the step size is to be printed after every step.

PLOTZA (Force and Surface Pressure Summary)

JSPPR — Following the completion of the final computational step, PLOTZA, which contains a list of forces and pressures at zone edges for each step, is read, and surface pressures along each edge may be printed. The default option is to list pressures only along edge 1 of each zone. JSPPR is the number of edges at which this output convention is to be changed. For each altered edge, list the zone number, edge number and the print option; 1 print, 0 don't print this edge. Insert this list at the indicated postion in the input file.
JSPDIS — Print the location of each grid point on the edges specified by JSPPR in addition to the surface pressures if JSPDIS is 1 (does not appear on PLOTZA). Do not print if JSPDIS is 0.
KSKIP — Write the surface pressures, forces and moments to PLOTZA at steps with numbers which are evenly divisible by KSKIP.
NPRT — On edges 2 and 4, only list the surface pressures for n planes less than NPRT.
DELZA — Write surface pressures,forces and moments to PLOTZA at step zeta intervals of DELZA.

PLOTZC (Plot tape) Crossflow plane at first and last step is always written to PLOTZC

IPLOT — Write the crossflow plane to PLOTZC at step numbers which are evenly divisible by IPLOT.
DELZC — Write the crossflow plane to DELZC at zeta intervals of DELZC.
IPLOTN — Number of target zeta stations at which crossflow plane will be written to PLOTZC. If IPLOTN > 0, a list of these stations, in ascending order should be included as indicated in the input file.

4.4 AERODYNAMIC DATA

AREF — Reference area to be used in the force and moment calculations.
XLREF— Reference length to be used in the force and moment calculations.
IEFORCE — Controls the output of forces on individual edges. Application of this option allows forces on individual fins to be determined. Set IEFORCE = 1 to invoke this option. Otherwise let IEFORCE = 0.

4.5 SEPARATION MODELING

IVIS — Type of separation model:

0 — no separation modeling;
1 — clipping;
2 — forced separation.

If options 0 or 1 are selected, the remainder of the information in this section is unnecessary. Note that option 2 can only be used with cylindrical coordinates. If option 2 is used, the information listed below is needed:

1 **NSEP** — The number of separation lines. Use of more than one separation line is necessary if separation on a body without pitch plane symmetry is to be modeled. Additional separation lines can also be used to model secondary separation.
2. For each separation line specify:
   - **ISSIDE** — the side of the body on which separation occurs; 0 – 0 °≤ ϕ_s ≤ 180°, 1 – 180° ≤ ϕ_s ≤ 360°, where ϕ_s is the location of the separation line;
   - **ISEP** — number of points used to define the separation line;
   - **ZSSEP** — Zeta value at which separation is started;
   - **ZESEP** — Zeta value at which separation is terminated;
   - **PHICD, PHIAD, BETACD,BETAAD** — Flow direction in degrees. Typical values are 20°, 20°, 20°, 5°, respectively.
   - A list of ISEP pairs of separation line coordinates (**ZEPZ, ZEPP**), where ZEPZ and ZEPP are the z and ϕ coordinates for each point.

4.6 GAS TYPE

IGAS — Type of gas

0 — Air is treated as a perfect gas;
1 — Air is treated in chemical equilibrium. Thermodynamic properties are determined using the subroutines for equilibrium air. IAPR must equal 0. Use of CONES is not recommended, and the flowfield must be initialized from uniform conditions (IMOD = 0) or using the blunt body program, BLUNT2.

4.7 UNITS

IUNITS — Dimensional units of problem. All input units must be consistant. Output units are the same.

0 — English units are used for input and output.
(p = lbf / ft**2 ; ρ = slug / ft**3 ; T = °R ; x,y,z = ft);
1 — Metric units are used for input and output.
(p = N / m**2 ; ρ = kg / m**3 ; T = °K ; x,y,z = m).

4.8 INITIAL PLANE DATA

IMOD

0 — Use a uniform initial flow field to start the calculation.
1 — Read the initial flow field from file START. This flow field can be generated by:

- The RESTART file from another ZEUS run;
- Program CONVERT which rezones RESTART files;
- Program CONES which generates an approximate conical flow field;
- Program NOSETIP or BLUNT2 which generates the starting data plane from a blunt body solution for flow over a sphere.

If IMOD =1, the remainder of the data in this section is unnecessary. Instructions for applying CONVERT, CONES and NOSETIP are given in Reference 2. For IMOD = 0, the initial flow field and mesh size are defined using the following information:

IZN — Number of zones;
NA — Number of cells in the ξ direction;

MA — Number of cells in the η direction summed over all zones. This information is followed by a list of the number of cells in the η direction in each zone;
ZETA — z coordinate of initial data plane;
ALPHA — Angle of attack in degrees (see Figure 1);
BETA — Yaw angle in degrees (see Figure 1);
XMINF — Free stream Mach number;
PINF — Free stream pressure. The magnitude of the free stream pressure scales out of solution. For example, if the free stream pressure is doubled, all solution pressures are doubled. Setting PINF = 1 insures that solution pressures are scaled by PINF. However, for IGAS = 1, PINF must be dimensional;
DINF — Free stream density. The magnitude of the free stream density also scales out of the solution. However, for IGAS = 1, DINF must be dimensional;
ICORD — 0,1,2 for cartesian, cylindrical or elliptical coordinates.
IASYM — 0 – flow is not symmetric about pitch plane; 1 – flow is symmetric about pitch plane symmetry;
ISHOCK — Set to 1 if edge 3 is to be fitted as a shock or expansion; otherwise set to zero.

4.9 MESH CLUSTERING

IMESHF — 0 if the mesh is to be uniform in the ξ direction, 1 for a clustered mesh. If clustering in this direction is used, a list of the f clustering function values at cell centers must be inserted into the input file as indicated. Start the list at the cell center adjacent to edge 1.
IMESHG — 0 if a the mesh is to be uniform in the η direction, 1 for a clustered mesh. If clustering in this direction is used, a different clustering function may be used in each zone. Hence it is necessary to specify g values at cell centers in each zone. Insert cell center g values into the input file as indicated, starting at zone 1 and ending at the final zone. Start the list at the cell center adjacent to edge 4 .

CHAPTER 5

PRE-PROCESSING PROGRAMS

This section describes the programs used to generate the START file for a ZEUS. Programs CONES, NOSETIP, GEOTEST, and CONVERT are described in Reference 2 and will not be further discussed here.

5.1 BLUNT2

The BLUNT2 program generates the START tape for flow over a sphere for air as both a perfect gas and in chemical equilibrium. The program in turn creates the ZEUS START file. BLUNT2 can be applied for Mach numbers greater than 1.5; however, the freestream Mach number must be large enough to insure that the axial component of the flow is supersonic at the sphere-afterbody junction so that the ZEUS code is marchable.

The BLUNT2 INPUT file is prepared by editing the following file:

```
The following file describes the required input for BLUNT2. To execute BLUNT2,
replace the () symbols in the value column with the desired variable value.
Add information supporting specific options between the lines containing
the >>>>> and <<<<< symbols.  Do not eliminate any lines from this file.
                                  ------------------
VALUE  VARIABLE          DESCRIPTION
-------------------------------------------------------------------------------
                    *****TITLE*****
Read in the title of computaton using A-format with a maximum of 72 characters.
               >>>>>start title
               <<<<<end title
-------------------------------------------------------------------------------
             *****FREESTREAM CONDITIONS*****
()      AMINF   Mach number
()      PINF    Pressure used if IATMP=0; otherwise, set PINF=1. For English
                units (IUNITS=0) use lbf/ft**2, and for metric units (IUNITS=1)
                use N/m**2.
()      TINF    Temperature used if IATMP=0; otherwise set TINF=1. For English
                units (IUNITS=0) use Rankine, and for metric units (IUNITS=1)
                use Kelvin.
()      IATMP   0-use input values of PINF and TINF; 59-use 1959 ARDC Tables;
                or 62-use 1962 U.S. Standard Tables to compute PINF and TINF.
```

```
()      ALT      Altitude used if IATMP=59 or 62 to compute PINF and TINF;
                 otherwise, if IATMP=0, set ALT=0. For English units (IUNITS=0)
                 use feet, and for metric units (IUNITS=1) use meters.
-------------------------------------------------------------------------------
                 *****GAS AND UNITS OPTIONS*****
()      IRG      0, 1 - air is a perfect gas or in chemical equilibrium.
()      IUNITS   0, 1 - dimensions are in English or metric units.
-------------------------------------------------------------------------------
                      *****SPHERE DATA*****
()      RN       Nose radius of the sphere in ft for IUNITS=0 or m for IUNITS=1.
()      YMAX     Maximum angle (in degrees) over the sphere for which the flow
                 field will be computed.  The 0 deg line corresponds to the
                 stagnation streamline. (Typically 120.)
()      NMAX     Number of mesh points between the body and the shock.
                 (Typically 18).
()      MMAX     Number of mesh points in the streamwise direction. (Typically 18)
()      IMAX     Number of time steps. Generally at least 500 steps is needed
                 to converge the solution.
-------------------------------------------------------------------------------
                      *****ZEUS DATA*****
()      ZSTART   Axial distance from the nosetip to the starting plane in
                 ft for IUNITS=0 or m for IUNITS=1.
()      Z0       Axial distance from the nosetip to the center of the sphere in
                 ft for IUNITS=0 or m for IUNITS=1
()      IASYM    0, 1 - non symmetric or symmetric flowfield computation.  If
                 BETA not equal to 0, then set IASYM=0.
()      NA       Number of mesh points between the body and shock for the
                 ZEUS starting crossflow plane.
()      MA       Number of mesh points in the circumferential direction for the
                 ZEUS starting crossflow plane.
()      ALPHA    Angle of attack (in degrees).
()      BETA     Angle of yaw (in degrees).
```

CHAPTER 6

SAMPLE CASES

This section discusses the computation of sample cases using ZEUS for equilibrium chemically reacting air.

6.1 HYPERSONIC SHARP CONE

This case compares perfect gas and equilibrium air computations for a sharp cone at 0° incidence and an altitude of 100,000 ft. Solutions were computed for three different hypersonic similarity parameters, $K_c = M_\infty \sin\theta_c$ = 5.18, 8.45, 14.79. Calculations were performed using the geometry described in cylindrical coordinates on a one zone 18 x 18 mesh. The solution was initiated using uniform flow conditions at ZETA = .1 and terminated at ZETA = 50. In addition, results are provided, as well as output found in Appendix B, for the sharp cone at the same altitude for M_∞ = 20 and 20° incidence on a 18 x 36 single zone mesh.

6.1.1 Geometry

A description of the edges of the zone are as follows:

EDGE 1: $b = \zeta \tan\theta_c$, $b_z = \tan\theta_c$, $b_\varphi = 0$.
EDGE 2: $\psi = \pi$, $\psi_z = \psi_r = 0$.
EDGE 3: not needed (shock fitted)
EDGE 4: $\sigma = 0.$, $\sigma_z = \sigma_r = 0$.

The required geometry routines are as follows:

```
      SUBROUTINE BCONST(ZETA,BOFZ,BZOFZ)
C.....THIS SUBROUTINE CALCULATES THE MAJOR AXIS OF AN ELLIPSE
C     (BOFZ) AND ITS Z DERIVATIVE (BZOFZ)
      RETURN
```

```
      END
      SUBROUTINE EDGE1(IN,ZETA,YY,BT,BZT,BYT)
C.....THIS SUBROUTINE DEFINES EDGE1
C.....USER DEFINES BT,BZT AND BYT AS A FUNCTION OF ZETA (ZETA)
C     Y OR PHI (YY) AND ZONE NUMBER (IN).
C          INPUT: IN   - ZONE NUMBER
C                 ZETA - ZETA
C          OUTPUT: BT   - X OR R LOCATION OF EDGE 1
C                  BZT - Z DERIVATIVE OF BT.
C                  BYT     DERIVATIVE OF BT.
C.....CHOOSE CONE ANGLE, THETAC=15,20,25,ETC.
      THETAC=25.
      PI=4.*ATAN(1.)
      RAD=PI/180.
      THETAR=THETAC*RAD
      BT=ZETA*TAN(THETAR)
      BZT=TAN(THETAR)
      BYT=0.
      RETURN
      END
      SUBROUTINE EDGE2(IN,ZETA,XX,THT,THZT,THXT)
C.....THIS SUBROUTINE DEFINES EDGE2
C.....USER DEFINES THT,THZT AND THXT AS A FUNCTION OF ZETA (ZETA)
C     X OR R (XX) AND ZONE NUMBER (IN).
C          INPUT: IN   - ZONE NUMBER
C                 ZETA - ZETA
C          OUTPUT: THT  - Y OR PHI LOCATION OF EDGE 2
C                  THZT - Z DERIVATIVE OF THT
C                  THXT - X DERIVATIVE OF THT.
C
      THT=4.*ATAN(1.)
      THZT=0.
      THXT=0.
      RETURN
      END
      SUBROUTINE EDGE3(IN,ZETA,PHI,CT,CZT,CXT)
C.....USER DEFINES CT,CZT,CYT IF BOW SHOCK IS NOT BEING TRACKED.
C     Y OR PHI (YY) AND ZONE NUMBER (IN).
C          INPUT: IN   - ZONE NUMBER
C                 ZETA - ZETA
C          OUTPUT: CT   - X OR R LOCATION OF EDGE 3
C                  CZT - Z DERIVATIVE OF CT.
C                  CYT - Y DERIVATIVE OF CT.
C
      RETURN
      END
      SUBROUTINE EDGE4(IN,ZETA,XX,SGT,SGZT,SGXT)
C.....THIS SUBROUTINE DEFINES EDGE4
C.....THE USER MUST PROVIDE A DEFINITION OF SGT,SGZT,SGXT, AS A FUNCTION
C     OF ZETA (ZETA), X OR R (YY) AND ZONE NUMBER (IN).
C          INPUT: IN   - ZONE NUMBER
C                 ZETA - ZETA
C          OUTPUT: SGT  - Y OR PHI LOCATION OF EDGE 4
```

```
C                    SGZT - Z DERIVATIVE OF SGT.
C                    SGXT - X DERIVATIVE OF SGT.
C
      SGT=0.
      SGZT=0.
      SGXT=0.
      RETURN
      END
      SUBROUTINE PEDGE(IN,II,ZETA,POUTL,PINL)
C     THIS SUBROUTINE CALCULATES THE FIN EDGE LOCATION
C     REQUIRED INPUT
C          IN - ZONE NUMBER
C          II - 1 FOR EDGE 4, 2 FOR EDGE 2
C          ZETA - ZETA
C
      POUTL=0.
      PINL=0.
C.....USER PROVIDES DEFINITION OF POUTL AND PINL
      RETURN
      END
```

6.1.2 ZEUS Input File — I

The following ZEUS input file is used for the sharp cone with a 25° half-angle at Mach 35 and 0° incidence (note that the flowfield is initiated with uniform conditions and the START file is not needed):

```
The following file describes the required input for ZEUS. To execute ZEUS,
replace the () symbols in the value column with the desired variable value.
Add information supporting specific options between the lines containing
the >>>>> and <<<<< symbols.  Variables enclosed by [] should be placed by
themselves on a line.  Do not eliminate any lines from this file.
                          ------------------
VALUE  VARIABLE          DESCRIPTION
-------------------------------------------------------------------------------
              *****INTEGRATION CONTROL*****
50.    ZETAEND Terminate calculation if ZETA > ZETAEND.
5000.  KEND    Terminate calculation if STEP NUMBER > KEND.
.9     FCFL    Step size safety factor (1. > FCFL > 0.) Typically use .9 .
1.     XKI     Interior point limiting constant (2. > XKI > 0.) Typically use 1.
0      IAPR    0,1 for approximate or complete Riemann Problem. Typically use 0.
               Must use 0 for equilibrium air.
0      ISHFLUX 0,1 for using complete Riemann Problem or freestream properties
               to compute the flux at the cell edge next to the bow shock.
               Typically use 0.
1      ISHANG  0,1 for using complete Riemann Problem or Roe averaged variables
               to compute shock angle. Typically use 0. For equilibrium air, a
               value of 1 is preferred.
-------------------------------------------------------------------------------
              *****BOUNDARY CONDITIONS*****
```

```
0       NXKE    Number of edges at which default limiter setting won't be used.
                Default settings are 2 on edges 1 or 3 and 0 on edges 2 or 4.
                For each edge at which the default limiter is non-standard, add
                a line containing the following information:
                zone number (KEZ), edge number (KEE) and limiter value (XKE)
                   >>>>>start list of [KEZ,KEE,XKE]
                   <<<<<end list
0       NSUR    Number of edges not featuring default surface types.  Default
                values are 1 on edges 1 and 3 and 0 on edge 2 and 4.  Program
                will automatically account a fitted shock on edge 3 or fin
                surfaces on edges 2 or 4. For each edge at which the surface
                type is not of default, add a line that specifies the zone
                number(KSURZ), edge number(KSURE) and surface type (KSUR).
                   >>>>>start list of [KSURZ,KSURE,KSUR]
                   <<<<<end list
.9      DFAC    In case of a local wall Mach number which is to small to allow
                the flow to be turned parallel to the wall, the turn angle is
                multiplied by the constant DFAC ( 1. > DFAC > 0.).
-----------------------------------------------------------------------------
             *****OUTPUT CONTROL*****
.
                ---Printer---
250     IPRINT  Print crossflow plane if step number is evenly divided by IPRINT
3       NSKIP   Print n planes which are evenly divisible by NSKIP
6       MSKIP   Print m planes which are evenly divisible by MSKIP
10      ISKIP   Print step size if step number is evenly divided by ISKIP
.
                ---PLOTZA/Force-Pressure Summary---
0       JSPPR   In default mode, only edge 1 of each zone will be written to
                PLOTZA.  JSPPR is the number of additional edges which are not
                to be written in the default manner.  For each edge added or
                deleted from this print list,include a line which specifies
                zone number (JSPZ), edge number (JSPE) and print code (JSP).
                JSP =  1 will write this zone edge to PLOTZA, 0 will not.
                   >>>>>start list of [JSPZ,JSPE,JSP]
                   <<<<<end list
0       JSPDIS  1 - print grid point locations for the edges specified by JSPPR.
                0 - do not print.
50      KSKIP   Write surface properties on selected edges to PLOTZA if
                if STEP NUMBER is evenly divisible by KSKIP
100     NPRT    On summary sheet, print surface pressures of edges 2 or 4 if
                n < NPRT.
10000.  DELZA   Write to PLOTZA if (ZETA - ZETA at last write) > DELZA
.
                ---PLOTZC (Plot file)
10000   IPLOT   Write to PLOTZC if STEP NUMBER is evenly divisible by IPLOT.
10000.  DELZC   Write to PLOTZC if (ZETA - ZETA at last write) > DELZC
0       IPLOTN  Number of target Z stations (ZTARGET) at which PLOTZC will
                be written.  If IPLOTN > 0,  Include a list of these
                stations on the next line (maximum of 20). Stations must be
                listed in ascending order.
                   >>>>>start ZTARGET list
                   <<<<<end list
-----------------------------------------------------------------------------
            *****AERODYNAMIC DATA*****
1.      AREF    Reference area used in calculating force and moment coefficients.
1.      XLREF   Reference length used in calculating moment coefficients and
                center-of-pressure.
```

```
0       IEFORCE 0, 1 don't, do print force and moments for individual edges.
-------------------------------------------------------------------------------
            *****SEPARATION MODELING*****
0       IVIS    0,1,2 for no modeling, clipping, and forced separation. Clipping
                and forced separation can only be used in conjunction with
                cylindrical coordinates. If IVIS = 2, specify the number of
                separation lines (NSEP).
                 >>>>> NSEP
                 <<<<<
                For each separation line specify:
                ISSIDE - 0 separation line located between 0 and 180 degrees,
                         1 separation line located between 180 and 360 degrees.
                ISEP - number of points used to define the separation line.
                ZSSEP - Zeta value at which separation is started
                ZESEP - Zeta value at which separation is terminated
                PHICD - separation angle phiC (degrees)
                PHIAD - separation angle phiA (degrees)
                BETACD - sparation andgle BetaC (degrees)
                BETAAD - separation angle BetaA (degrees)
                 >>>>> [ISSIDE,ISEP,ZSSEP,ZESEP,PHICD,PHIAD,BETACD,BETAAD]
                 <<<<<
                A list of ISEP pairs of points (ZEPZ,ZEPP) describing the zeta
                and phi coordinates of the separation line.  This list should
                start at the most forward section and move aft. Start the list
                for each separation line on a separate line and list in same
                order as used in the above data.
                  >>>>> start list of ZEPZ,ZEPP
                  <<<<<
-------------------------------------------------------------------------------
            *****GAS TYPE*****
1       IGAS    0-perfect gas; 1-equilibrium air
-------------------------------------------------------------------------------
            *****UNITS *****
1       IUNITS  0-english  (p=lbf/ft**2, rho=slug/ft**3, t=rankine, xyz=ft);
                1-metric   (p=n/m**2,    rho=kg/m**3,    t=kelvin,  xyz=m).
                All input units must be consistant.  Output units are the same.
-------------------------------------------------------------------------------
            *****INITIAL DATA*****
0       IMOD    0,1 for new start or restart respectively. For a restart, the
                initial flow field is read from TAPE3.  Additional information
                is not needed and the remaining entries in this section should
                be disregarded.  A new start assumes a uniform flow field which
                is described in the following section.
.
                  ---Mesh Size---
1       IZN     Number of zones.
18      NA      Number of cells in xi direction (i.e., between edges 1 and 3)
18      MA      Number of cells in eta direction (i.e., between edge 4 of zone 1
                and edge 2 of zone IZN)
.
                List the number of M planes in each zone, starting from zone 1
                and ending at zone MA.
                      >>>>>Start list of MA for each zone
18
                      <<<<<end list
.
                  ---Flow Properties---
.01     ZETA    Zeta coordinate of initial data plane
```

```
0.      ALPHA   Angle of attack (degrees)
0.      BETA    Angle of yaw (degrees)
35.     XMINF   Mach number
1185.5 PINF     Pressure
.017861 DINF     Density
.
                 ---Problem Definition---
                 PROBLEM DEFINITION
1       ICORD   0,1,2 for cartesian, cylindrical or elliptic coordinates
1       IASYM   0 - no pitch plane symmetry; 1 - pitch plane symmetry.
1       ISHOCK  Set to 1 if edge 3 is to be fitted by the calculation
                (either as a shock or sonic line); otherwise set to 0.
                ISHOCK = 1 is only valid for ICORD =1 or 2. If edge 3
                is to be fitted, the r and phi (cylindrical coordinates)
                or s, tau (elliptic coordinates) of the shock location on each
                M plane, (SS, SSZ) must be defined, starting from M = 1.
                etc,.
                       >>>>>Start list of (SS,SSZ)
.20    5.
.20   15.
.20   25.
.20   35.
.20   45.
.20   55.
.20   65.
.20   75.
.20   85.
.20   95.
.20  105.
.20  115.
.20  125.
.20  135.
.20  145.
.20  155.
.20  165.
.20  175.
                       >>>>>End list
-----------------------------------------------------------------------------
*****MESH DEFINITION*****
0       IMESHF  0 for uniform mesh in xi direction.  1 for clustered mesh.  If
                a clustered mesh is to be used, the clustering function (FN) in
                the xi direction at the NA cell centers must be defined
                starting at cell 1, located adjacent to edge 1 and moving to
                edge 3 (usually body to shock).
                     >>>>>start list of FN
                     >>>>>end list
0       IMESHG  0 for uniform mesh in eta direction.  1 for clustered mesh.  If
                a clustered mesh is to be used, the clustering function (GN) in
                the eta direction at the MA(i) cell centers in each zone must
                be defined, starting with zone 1 and ending with zone IZN. Start
                with cell 1, located adjacent to edge 4,and end at the cell
                adjacent to edge 2.  The list for each zone should be started
                on a new card
                     >>>>>>>>start list GN
                             end list<<<<<<<
```

6.1.3 ZEUS Input File — II

The following ZEUS input file is used for the sharp cone with a 25° half-angle at Mach 20 and 20° incidence (note that the flowfield is initiated with uniform conditions and the START file is not needed):

```
The following file describes the required input for ZEUS. To execute ZEUS,
replace the () symbols in the value column with the desired variable value.
Add information supporting specific options between the lines containing
the >>>>> and <<<<< symbols.  Variables enclosed by [] should be placed by
themselves on a line.  Do not eliminate any lines from this file.
                                  ------------------
VALUE  VARIABLE          DESCRIPTION
-------------------------------------------------------------------------------
              *****INTEGRATION CONTROL*****
50.    ZETAEND Terminate calculation if ZETA > ZETAEND.
5000.  KEND    Terminate calculation if STEP NUMBER > KEND.
.9     FCFL    Step size safety factor (1. > FCFL > 0.) Typically use .9 .
1.     XKI     Interior point limiting constant (2. > XKI > 0.) Typically use 1.
0      IAPR    0,1 for approximate or complete Riemann Problem. Typically use 0.
               Must use 0 for equilibrium air.
0      ISHFLUX 0,1 for using complete Riemann Problem or freestream properties
               to compute the flux at the cell edge next to the bow shock.
               Typically use 0.
1      ISHANG  0,1 for using complete Riemann Problem or Roe averaged variables
               to compute shock angle. Typically use 0. For equilibrium air, a
               value of 1 is preferred.
-------------------------------------------------------------------------------
              *****BOUNDARY CONDITIONS*****
1      NXKE    Number of edges at which default limiter setting won't be used.
               Default settings are 2 on edges 1 or 3 and 0 on edges 2 or 4.
               For each edge at which the default limiter is non-standard, add
               a line containing the following information:
               zone number (KEZ), edge number (KEE) and limiter value (XKE)
                  >>>>>start list of [KEZ,KEE,XKE]
1  3  0
                  <<<<<end list
0      NSUR    Number of edges not featuring default surface types.  Default
               values are 1 on edges 1 and 3 and 0 on edge 2 and 4.  Program
               will automatically account a fitted shock on edge 3 or fin
               surfaces on edges 2 or 4. For each edge at which the surface
               type is not of default, add a line that specifies the zone
               number(KSURZ), edge number(KSURE) and surface type (KSUR).
                  >>>>>start list of [KSURZ,KSURE,KSUR]
                  <<<<<end list
.9     DFAC    In case of a local wall Mach number which is to small to allow
               the flow to be turned parallel to the wall, the turn angle is
               multiplied by the constant DFAC ( 1. > DFAC > 0.).
-------------------------------------------------------------------------------
              *****OUTPUT CONTROL*****

               ---Printer---
250    IPRINT  Print crossflow plane if step number is evenly divided by IPRINT
3      NSKIP   Print n planes which are evenly divisible by NSKIP
```

```
6       MSKIP   Print m planes which are evenly divisible by MSKIP
10      ISKIP   Print step size if step number is evenly divided by ISKIP
.
                ---PLOTZA/Force-Pressure Summary---
0       JSPPR   In default mode, only edge 1 of each zone will be written to
                PLOTZA.  JSPPR is the number of additional edges which are not
                to be written in the default manner.  For each edge added or
                deleted from this print list,include a line which specifies
                zone number (JSPZ), edge number (JSPE) and print code (JSP).
                JSP =  1 will write this zone edge to PLOTZA, 0 will not.
                   >>>>>start list of [JSPZ,JSPE,JSP]
                   <<<<<end list
0       JSPDIS  1 - print grid point locations for the edges specified by JSPPR.
                0 - do not print.
50      KSKIP   Write surface properties on selected edges to PLOTZA if
                if STEP NUMBER is evenly divisible by KSKIP
100     NPRT    On summary sheet, print surface pressures of edges 2 or 4 if
                n < NPRT.
10000.  DELZA   Write to PLOTZA if (ZETA - ZETA at last write) > DELZA
.
                ---PLOTZC (Plot file)
10000   IPLOT   Write to PLOTZC if STEP NUMBER is evenly divisible by IPLOT.
10000.  DELZC   Write to PLOTZC if (ZETA - ZETA at last write) > DELZC
0       IPLOTN  Number of target Z stations (ZTARGET) at which PLOTZC will
                be written.  If IPLOTN > 0,  Include a list of these
                stations on the next line (maximum of 20). Stations must be
                listed in ascending order.
                   >>>>>start ZTARGET list
                   <<<<<end list
-----------------------------------------------------------------------------
            *****AERODYNAMIC DATA*****
1.      AREF    Reference area used in calculating force and moment coefficients.
1.      XLREF   Reference length used in calculating moment coefficients and
                center-of-pressure.
0       IEFORCE 0, 1 don't, do print force and moments for individual edges.
-----------------------------------------------------------------------------
            *****SEPARATION MODELING*****
0       IVIS    0,1,2 for no modeling, clipping, and forced separation. Clipping
                and forced separation can only be used in conjunction with
                cylindrical coordinates. If IVIS = 2, specify the number of
                separation lines (NSEP).
                 >>>>> NSEP
                 <<<<<
                For each separation line specify:
                ISSIDE - 0 separation line located between 0 and 180 degrees,
                         1 separation line located between 180 and 360 degrees.
                ISEP - number of points used to define the separation line.
                ZSSEP - Zeta value at which separation is started
                ZESEP - Zeta value at which separation is terminated
                PHICD - separation angle phiC (degrees)
                PHIAD - separation angle phiA (degrees)
                BETACD - sparation andgle BetaC (degrees)
                BETAAD - separation angle BetaA (degrees)
                 >>>>> [ISSIDE,ISEP,ZSSEP,ZESEP,PHICD,PHIAD,BETACD,BETAAD]
                 <<<<<
                A list of ISEP pairs of points (ZEPZ,ZEPP) describing the zeta
                and phi coordinates of the separation line.  This list should
                start at the most forward section and move aft. Start the list
```

```
                for each separation line on a separate line and list in same
                order as used in the above data.
                  >>>>> start list of ZEPZ,ZEPP
                  <<<<<
-----------------------------------------------------------------------------
            *****GAS TYPE*****
1       IGAS    0-perfect gas; 1-equilibrium air
-----------------------------------------------------------------------------
            *****UNITS *****
1       IUNITS  0-english  (p=lbf/ft**2, rho=slug/ft**3, t=rankine, xyz=ft);
                1-metric   (p=n/m**2,    rho=kg/m**3,    t=kelvin,  xyz=m).
                All input units must be consistant.  Output units are the same.
-----------------------------------------------------------------------------
            *****INITIAL DATA*****
0       IMOD    0,1 for new start or restart respectively. For a restart, the
                initial flow field is read from TAPE3.  Additional information
                is not needed and the remaining entries in this section should
                be disregarded.  A new start assumes a uniform flow field which
                is described in the following section.
.
                  ---Mesh Size---
1       IZN     Number of zones.
18      NA      Number of cells in xi direction (i.e., between edges 1 and 3)
36      MA      Number of cells in eta direction (i.e., between edge 4 of zone 1
                and edge 2 of zone IZN)
.
                List the number of M planes in each zone, starting from zone 1
                and ending at zone MA.
                      >>>>>Start list of MA for each zone
36
                      <<<<<end list
.
                  ---Flow Properties---
.1      ZETA    Zeta coordinate of initial data plane
20.     ALPHA   Angle of attack (degrees)
0.      BETA    Angle of yaw (degrees)
20.     XMINF   Mach number
1185.5 PINF     Pressure
.017861 DINF     Density
.
                  ---Problem Definition---
                  PROBLEM DEFINITION
1       ICORD   0,1,2 for cartesian, cylindrical or elliptic coordinates
1       IASYM   0 - no pitch plane symmetry; 1 - pitch plane symmetry.
1       ISHOCK  Set to 1 if edge 3 is to be fitted by the calculation
                (either as a shock or sonic line); otherwise set to 0.
                ISHOCK = 1 is only valid for ICORD =1 or 2. If edge 3
                is to be fitted, the r and phi (cylindrical coordinates)
                or s, tau (elliptic coordinates) of the shock location on each
                M plane, (SS, SSZ) must be defined, starting from M = 1,
                etc,.
                       >>>>>Start list of (SS,SSZ)
.30     2.5
.30     7.5
.30    12.5
.30    17.5
.30    22.5
.30    27.5
```

```
.30   32.5
.30   37.5
.30   42.5
.30   47.5
.30   52.5
.30   57.5
.30   62.5
.30   67.5
.30   72.5
.30   77.5
.30   82.5
.30   87.5
.30   92.5
.30   97.5
.30  102.5
.30  107.5
.30  112.5
.30  117.5
.30  122.5
.30  127.5
.30  132.5
.30  137.5
.30  142.5
.30  147.5
.30  152.5
.30  157.5
.30  162.5
.30  167.5
.30  172.5
.30  177.5
                    >>>>>End list
-----------------------------------------------------------------------------
*****MESH DEFINITION*****
0       IMESHF  0 for uniform mesh in xi direction.  1 for clustered mesh.  If
                a clustered mesh is to be used, the clustering function (FN) in
                the xi direction at the NA cell centers must be defined
                starting at cell 1, located adjacent to edge 1 and moving to
                edge 3 (usually body to shock).
                     >>>>>start list of FN
                     >>>>>end list
0       IMESHG  0 for uniform mesh in eta direction.  1 for clustered mesh.  If
                a clustered mesh is to be used, the clustering function (GN) in
                the eta direction at the MA(i) cell centers in each zone must
                be defined, starting with zone 1 and ending with zone IZN. Start
                with cell 1, located adjacent to edge 4,and end at the cell
                adjacent to edge 2.  The list for each zone should be started
                on a new card
                     >>>>>>>>start list GN
                             end list<<<<<<<
```

6.1.4 Results

Conical flow solutions have been computed for a right circular sharp cone with $\theta_c = 25°$ and for Mach 20 at 0° incidence. Results are compared with tabulated cone properties by Hudgins[15] at an altitude of 100,000 ft. Figure 4 displays surface property comparisons between equilibrium air and calorically perfect results as a function of the hypersonic similarity parameter, K_c. Computed results are in good agreement with tabulated results for values of K_c = 5.18, 8.45, and 14.79. The characteristics of equilibrium chemically reacting air are well predicted which show that for chemically reacting air (1) the pressure is strongly dependent on the mechanical aspects of the flow and not the chemical reactions, (2) the density ratio is higher implying a smaller shock layer thickness, and (3) the equilibrium temperatures are lower than calorically perfect results, a result of the dissociated air. Figure 5 illustrates pressure contours for Mach 20 at 20° incidence. Equilibrium air results demonstate a smaller shock layer thickness as compared to calorically perfect results.

6.2 HYPERSONIC BLUNT NOSE CYLINDER

This case consists of a spherically blunt nosed cylinder at Mach 20, incidences of 0° and 20°, and an altitude of 20,000 meters for equilibrium air. The output for 20° is provided in Appendix B. The calculation, which uses a cylindrical coordinate description of the geometry, is divided into two sections. The first is the spherically blunt nose calculation using the program BLUNT2 on a 18 x 25 mesh which generates a ZEUS starting solution at ZETA = .5. The second computes the cylinder body using a 36 x 36 single zone mesh and is terminated at ZETA = 20.

6.2.1 Geometry

A description of the edges of the zone are as follows:

EDGE 1: $b = .5$, $b_z = b_\phi = 0.$
EDGE 2: $\psi = \pi$, $\psi_z = \psi_r = 0.$
EDGE 3: not needed (shock fitted)
EDGE 4: $\sigma = 0.$, $\sigma_z = \sigma_r = 0.$

The required geometry routines are as follows:

```
      SUBROUTINE BCONST(ZETA,BOFZ,BZOFZ)
C.....THIS SUBROUTINE CALCULATES THE MAJOR AXIS OF AN ELLIPSE
C     (BOFZ) AND ITS Z DERIVATIVE (BZOFZ)
      RETURN
```

```
      END
      SUBROUTINE EDGE1(IN,ZETA,YY,BT,BZT,BYT)
C.....THIS SUBROUTINE DEFINES EDGE1
C.....USER DEFINES BT,BZT AND BYT AS A FUNCTION OF ZETA (ZETA)
C     Y OR PHI (YY) AND ZONE NUMBER (IN).
C          INPUT: IN   - ZONE NUMBER
C                 ZETA - ZETA
C          OUTPUT: BT  - X OR R LOCATION OF EDGE 1
C                  BZT - Z DERIVATIVE OF BT.
C                  BYT - Y DERIVATIVE OF BT.
      BT=.5
      BZT=0.
      BYT=0.
      RETURN
      END
      SUBROUTINE EDGE2(IN,ZETA,XX,THT,THZT,THXT)
C.....THIS SUBROUTINE DEFINES EDGE2
C.....USER DEFINES THT,THZT AND THXT AS A FUNCTION OF ZETA (ZETA)
C     X OR R (XX) AND ZONE NUMBER (IN).
C          INPUT: IN   - ZONE NUMBER
C                 ZETA - ZETA
C          OUTPUT: THT  - Y OR PHI LOCATION OF EDGE 2
C                  THZT - Z DERIVATIVE OF THT.
C                  THXT - X DERIVATIVE OF THT.
C
      THT=4.*ATAN(1.)
      THZT=0.
      THXT=0.
      RETURN
      END
      SUBROUTINE EDGE3(IN,ZETA,PHI,CT,CZT,CXT)
C.....USER DEFINES CT,CZT,CYT IF BOW SHOCK IS NOT BEING TRACKED.
C     Y OR PHI (YY) AND ZONE NUMBER (IN).
C          INPUT: IN   - ZONE NUMBER
C                 ZETA - ZETA
C          OUTPUT: CT  - X OR R LOCATION OF EDGE 3
C                  CZT - Z DERIVATIVE OF CT.
C                  CYT - Y DERIVATIVE OF CT.
C
      RETURN
      END
      SUBROUTINE EDGE4(IN,ZETA,XX,SGT,SGZT,SGXT)
C.....THIS SUBROUTINE DEFINES EDGE4
C.....THE USER MUST PROVIDE A DEFINITION OF SGT,SGZT,SGXT, AS A FUNCTION
C     OF ZETA (ZETA), X OR R (YY) AND ZONE NUMBER (IN).
C          INPUT: IN   - ZONE NUMBER
C                 ZETA - ZETA
C          OUTPUT: SGT  - Y OR PHI LOCATION OF EDGE 4
C                  SGZT - Z DERIVATIVE OF SGT.
C                  SGXT - X DERIVATIVE OF SGT.
C
      SGT=0.
      SGZT=0.
```

```
      SGXT=0.
      RETURN
      END
      SUBROUTINE PEDGE(IN,II,ZETA,POUTL,PINL)
C     THIS SUBROUTINE CALCULATES THE FIN EDGE LOCATION
C     REQUIRED INPUT
C          IN - ZONE NUMBER
C          II - 1 FOR EDGE 4, 2 FOR EDGE 2
C          ZETA - ZETA
C
      POUTL=0.
      PINL=0.
C.....USER PROVIDES DEFINITION OF POUTL AND PINL
      RETURN
      END
```

6.2.2 START File

The start file for 20° incidence is generated using the BLUNT2 program using the following input:

```
The following file describes the required input for BLUNT2. To execute BLUNT2,
replace the () symbols in the value column with the desired variable value.
Add information supporting specific options between the lines containing
the >>>>> and <<<<< symbols.  Do not eliminate any lines from this file.
                                  ------------------
VALUE  VARIABLE          DESCRIPTION
-------------------------------------------------------------------------------
                     *****TITLE*****
Read in the title of computaton using A-format with a maximum of 72 characters.
               >>>>>start title
Hypersonic Blunt Nose Cylinder, M=20, Alpha=0, Alt=20,000 m
               <<<<<end title
-------------------------------------------------------------------------------
             *****FREESTREAM CONDITIONS*****
20.    AMINF   Mach number
1.     PINF    Pressure used if IATMP=0; otherwise, set PINF=1. For English
               units (IUNITS=0) use lbf/ft**2, and for metric units (IUNITS=1)
               use N/m**2.
1.     TINF    Temperature used if IATMP=0; otherwise set TINF=1. For English
               units (IUNITS=0) use Rankine, and for metric units (IUNITS=1)
               use Kelvin.
59     IATMP   0-use input values of PINF and TINF; 59-use 1959 ARDC Tables;
               or 62-use 1962 U.S. Standard Tables to compute PINF and TINF.
20000. ALT     Altitude used if IATMP=59 or 62 to compute PINF and TINF;
               otherwise, if IATMP=0, set ALT=0. For English units (IUNITS=0)
               use feet, and for metric units (IUNITS=1) use meters.
-------------------------------------------------------------------------------
             *****GAS AND UNITS OPTIONS*****
1      IRG     0, 1 - air is a perfect gas or in chemical equilibrium.
1      IUNITS  0, 1 - dimensions are in English or metric units.
-------------------------------------------------------------------------------
```

```
                  *****SPHERE DATA*****
.5      RN       Nose radius of the sphere in ft for IUNITS=0 or m for IUNITS=1.
120.    YMAX     Maximum angle (in degrees) over the sphere for which the flow
                 field will be computed.  The 0 deg line corresponds to the
                 stagnation streamline. (Typically 120.)
18.     NMAX     Number of mesh points between the body and the shock.
                 (Typically 18).
25.     MMAX     Number of mesh points in the streamwise direction. (Typically 18)
2000    IMAX     Number of time steps. Generally at least 500 steps is needed
                 to converge the solution.
-------------------------------------------------------------------------------
                  *****ZEUS DATA*****
.5      ZSTART   Axial distance from the nosetip to the starting plane in
                 ft for IUNITS=0 or m for IUNITS=1.
.5      Z0       Axial distance from the nosetip to the center of the sphere in
                 ft for IUNITS=0 or m for IUNITS=1.
1       IASYM    0, 1 - non symmetric or symmetric flowfield computation.  If
                 BETA not equal to 0, then set IASYM=0.
36      NA       Number of mesh points between the body and shock for the
                 ZEUS starting crossflow plane.
36      MA       Number of mesh points in the circumferential direction for the
                 ZEUS starting crossflow plane.
20.     ALPHA    Angle of attack (in degrees).
0.      BETA     Angle of yaw (in degrees).
```

6.2.3 ZEUS Input File

The following ZEUS input file is used for the afterbody:

```
The following file describes the required input for ZEUS. To execute ZEUS,
replace the () symbols in the value column with the desired variable value.
Add information supporting specific options between the lines containing
the >>>>> and <<<<< symbols.  Variables enclosed by [] should be placed by
themselves on a line.  Do not eliminate any lines from this file.
                          ------------------
VALUE  VARIABLE          DESCRIPTION
-------------------------------------------------------------------------------
              *****INTEGRATION CONTROL*****
10.     ZETAEND Terminate calculation if ZETA > ZETAEND.
5000.   KEND    Terminate calculation if STEP NUMBER > KEND.
.9      FCFL    Step size safety factor (1. > FCFL > 0.) Typically use .9 .
1.      XKI     Interior point limiting constant (2. > XKI > 0.) Typically use 1.
0       IAPR    0,1 for approximate or complete Riemann Problem. Typically use 0.
                Must use 0 for equilibrium air.
1       ISHFLUX 0,1 for using complete Riemann Problem or freestream properties
                to compute the flux at the cell edge next to the bow shock.
```

```
                Typically use 0.
1       ISHANG  0,1 for using complete Riemann Problem or Roe averaged variables
                to compute shock angle. Typically use 0. For equilibrium air, a
                value of 1 is preferred.
-----------------------------------------------------------------------------
              *****BOUNDARY CONDITIONS*****
1       NXKE    Number of edges at which default limiter setting won't be used.
                Default settings are 2 on edges 1 or 3 and 0 on edges 2 or 4.
                For each edge at which the default limiter is non-standard, add
                a line containing the following information:
                zone number (KEZ), edge number (KEE) and limiter value (XKE)
                   >>>>>start list of [KEZ,KEE,XKE]
1 1 1.
                   <<<<<end list
0       NSUR    Number of edges not featuring default surface types.  Default
                values are 1 on edges 1 and 3 and 0 on edge 2 and 4.  Program
                will automatically account a fitted shock on edge 3 or fin
                surfaces on edges 2 or 4. For each edge at which the surface
                type is not of default, add a line that specifies the zone
                number(KSURZ), edge number(KSURE) and surface type (KSUR).
                   >>>>>start list of [KSURZ,KSURE,KSUR]
                   <<<<<end list
.9      DFAC    In case of a local wall Mach number which is to small to allow
                the flow to be turned parallel to the wall, the turn angle is
                multiplied by the constant DFAC ( 1. > DFAC > 0.).
-----------------------------------------------------------------------------
              *****OUTPUT CONTROL*****
.
                ---Printer---
250     IPRINT  Print crossflow plane if step number is evenly divided by IPRINT
6       NSKIP   Print n planes which are evenly divisible by NSKIP
6       MSKIP   Print m planes which are evenly divisible by MSKIP
10      ISKIP   Print step size if step number is evenly divided by ISKIP
.
                ---PLOTZA/Force-Pressure Summary---
0       JSPPR   In default\mode, only edge 1 of each zone will be written to
                PLOTZA.  JSPPR is the number of additional edges which are not
                to be written in the default manner.  For each edge added or
                deleted from this print list,include a line which specifies
                zone number (JSPZ), edge number (JSPE) and print code (JSP).
                JSP =  1 will write this zone edge to PLOTZA, 0 will not.
                   >>>>>start list of [JSPZ,JSPE,JSP]
                   <<<<<end list
```

```
0       JSPDIS  1 - print grid point locations for the edges specified by JSPPR.
                0 - do not print.
40      KSKIP   Write surface properties on selected edges to PLOTZA if
                if STEP NUMBER is evenly divisible by KSKIP
100     NPRT    On summary sheet, print surface pressures of edges 2 or 4 if
                n < NPRT.
10000.  DELZA   Write to PLOTZA if (ZETA - ZETA at last write) > DELZA
.
                ---PLOTZC (Plot file)
10000   IPLOT   Write to PLOTZC if STEP NUMBER is evenly divisible by IPLOT.
10000.  DELZC   Write to PLOTZC if (ZETA - ZETA at last write) > DELZC
2       IPLOTN  Number of target Z stations (ZTARGET) at which PLOTZC will
                be written.  If IPLOTN > 0,  Include a list of these
                stations on the next line (maximum of 20). Stations must be
                listed in ascending order.
                   >>>>>start ZTARGET list
.5   10.
                   <<<<<end list
-----------------------------------------------------------------------------
            *****AERODYNAMIC DATA*****
1.      AREF    Reference area used in calculating force and moment coefficients.
1.      XLREF   Reference length used in calculating moment coefficients and
                center-of-pressure.
0       IEFORCE 0, 1 don't, do print force and moments for individual edges.
-----------------------------------------------------------------------------
            *****SEPARATION MODELING*****
0       IVIS    0,1,2 for no modeling, clipping, and forced separation. Clipping
                and forced separation can only be used in conjunction with
                cylindrical coordinates. If IVIS = 2, specify the number of
                separation lines (NSEP).
                 >>>>> NSEP
                 <<<<<
                For each separation line specify:
                ISSIDE - 0 separation line located between 0 and 180 degrees,
                         1 separation line located between 180 and 360 degrees.
                ISEP - number of points used to define the separation line.
                ZSSEP - Zeta value at which separation is started
                ZESEP - Zeta value at which separation is terminated
                PHICD - separation angle phiC (degrees)
                PHIAD - separation angle phiA (degrees)
                BETACD - sparation andgle BetaC (degrees)
                BETAAD - separation angle BetaA (degrees)
                 >>>>> (ISSIDE,ISEP,ZSSEP,ZESEP,PHICD,PHIAD,BETACD,BETAAD)
```

```
                <<<<<
                A list of ISEP pairs of points (ZEPZ,ZEPP) describing the zeta
                and phi coordinates of the separation line.  This list should
                start at the most forward section and move aft. Start the list
                for each separation line on a separate line and list in same
                order as used in the above data.
                  >>>>> start list of ZEPZ,ZEPP
                  <<<<<
-----------------------------------------------------------------------------
            *****GAS TYPE*****
1       IGAS    0-perfect gas; 1-equilibrium air
-----------------------------------------------------------------------------
            *****UNITS *****
1       IUNITS  0-english  (p=lbf/ft**2, rho=slug/ft**3, t=rankine, xyz=ft);
                1-metric   (p=n/m**2,    rho=kg/m**3,    t=kelvin,  xyz=m).
                All input units must be consistant.  Output units are the same.
-----------------------------------------------------------------------------
            *****INITIAL DATA*****
1       IMOD    0,1 for new start or restart respectively. For a restart, the
                initial flow field is read from TAPE3.  Additional information
                is not needed and the remaining entries in this section should
                be disregarded.  A new start assumes a uniform flow field which
                is described in the following section.
.
                  ---Mesh Size---
()      IZN     Number of zones.
()      NA      Number of cells in xi direction (i.e., between edges 1 and 3)
()      MA      Number of cells in eta direction (i.e., between edge 4 of zone 1
                and edge 2 of zone IZN)
.
                List the number of M planes in each zone, starting from zone 1
                and ending at zone MA.
                      >>>>>Start list of MA for each zone
                      <<<<<end list
.
                  ---Flow Properties---
()      ZETA    Zeta coordinate of initial data plane
()      ALPHA   Angle of attack (degrees)
()      BETA    Angle of yaw (degrees)
()      XMINF   Mach number
()      PINF    Pressure
()      DINF    Density
.
```

```
                ---Problem Definition---
                PROBLEM DEFINITION
()      ICORD   0,1,2 for cartesian, cylindrical or elliptic coordinates
()      IASYM   0 - no pitch plane symmetry; 1 - pitch plane symmetry.
()      ISHOCK  Set to 1 if edge 3 is to be fitted by the calculation
                (either as a shock or sonic line); otherwise set to 0.
                ISHOCK = 1 is only valid for ICORD =1 or 2. If edge 3
                is to be fitted, the r and phi (cylindrical coordinates)
                or s, tau (elliptic coordinates) of the shock location on each
                M plane, (SS, SSZ) must be defined, starting from M = 1,
                etc,.
                       >>>>>Start list of [SS,SSZ]
                       >>>>>End list
-------------------------------------------------------------------------------
*****MESH DEFINITION*****
0       IMESHF  0 for uniform mesh in xi direction.  1 for clustered mesh.  If
                a clustered mesh is to be used, the clustering function (FN) in
                the xi direction at the NA cell centers must be defined
                starting at cell 1, located adjacent to edge 1 and moving to
                edge 3 (usually body to shock).
                     >>>>>start list of FN
                     >>>>>end list
0       IMESHG  0 for uniform mesh in eta direction.  1 for clustered mesh.  If
                a clustered mesh is to be used, the clustering function (GN) in
                the eta direction at the MA(i) cell centers in each zone must
                be defined, starting with zone 1 and ending with zone IZN. Start
                with cell 1, located adjacent to edge 4,and end at the cell
                adjacent to edge 2.  The list for each zone should be started
                on a new card
                     >>>>>>>>start list GN
                             end list<<<<<<<<
```

6.2.4 Results

Computations were performed for a spherically blunt nosed cylinder at an altitude of 20 km for Mach 20 at 0° and 20° incidences. ZEUS computations are compared with computed results of Palmer[16] for 0° incidence. Density and temperature contour plots in Figures 6 and 7 compare well for both calorically perfect and equilibrium air. ZEUS predicts the exhibited higher densities and thinner shock layer and lower temperatures associated with the chemically reacting air. Figure 8 illustrates density contours for the 20° incidence case at an axial station 9.5 diameters downstream.

6.3 HYPERSONIC AIRCRAFT

The hypersonic aircraft configuration[17] of Figure 9 was computed at Mach 24.5 at 1° angle of incidence. A uniform 36 x 18 single zone mesh was implemented over the nose cone. For the wing section, the flow field was rezoned into two zones with each zone containing a 72 x 36 uniform mesh. Here, the outer boundary, edge 3, was defined outside the bow shock in the free stream.

6.3.1 Geometry — Nose Section

A description of the edges of the zone are as follows:

EDGE 1: $b = \zeta \tan\theta_c$, $b_z = \tan\theta_c$, $b_\phi = 0$.
EDGE 2: $\psi = \pi$, $\psi_z = \psi_r = 0$.
EDGE 3: not needed (shock fitted)
EDGE 4: $\sigma = 0.$, $\sigma_z = \sigma_r = 0$.

The required geometry routines are as follows:

```
      SUBROUTINE BCONST(ZETA,BOFZ,BZOFZ)
C.....THIS SUBROUTINE CALCULATES THE MAJOR AXIS OF AN ELLIPSE
C     (BOFZ) AND ITS Z DERIVATIVE (BZOFZ)
      RETURN
      END
      SUBROUTINE EDGE1(IN,ZETA,YY,BT,BZT,BYT)
C.....THIS SUBROUTINE DEFINES EDGE1
C.....USER DEFINES BT,BZT AND BYT AS A FUNCTION OF ZETA (ZETA)
C     Y OR PHI (YY) AND ZONE NUMBER (IN).
C          INPUT: IN   - ZONE NUMBER
C                 ZETA - ZETA
C          OUTPUT: BT  - X OR R LOCATION OF EDGE 1
C                  BZT - Z DERIVATIVE OF BT.
C                  BYT - Y DERIVATIVE OF BT.
      BYT=0.
      BZT=0.
      BT=5.08333
      IF(ZETA.LE.63.0)THEN
      THETAC=4.6
      PI=4.*ATAN(1.)
      RAD=PI/180.
      THETAR=THETAC*RAD
      BT=ZETA*TAN(THETAR)
      BZT=TAN(THETAR)
      BYT=0.
      ENDIF
```

```
      RETURN
      END
      SUBROUTINE EDGE2(IN,ZETA,XX,THT,THZT,THXT)
C.....THIS SUBROUTINE DEFINES EDGE2
C.....USER DEFINES THT,THZT AND THXT AS A FUNCTION OF ZETA (ZETA)
C     X OR R (XX) AND ZONE NUMBER (IN).
C          INPUT: IN   - ZONE NUMBER
C                 ZETA - ZETA
C          OUTPUT: THT  - Y OR PHI LOCATION OF EDGE 2
C                  THZT - Z DERIVATIVE OF THT.
C                  THXT - X DERIVATIVE OF THT.
C
      THT=4.*ATAN(1.)
      THXT=0.
      THZT=0.
      RETURN
      END
      SUBROUTINE EDGE3(IN,ZETA,PHI,CT,CZT,CXT)
C.....USER DEFINES CT,CZT,CYT IF BOW SHOCK IS NOT BEING TRACKED.
C     Y OR PHI (YY) AND ZONE NUMBER (IN).
C          INPUT: IN   - ZONE NUMBER
C                 ZETA - ZETA
C          OUTPUT: CT  - X OR R LOCATION OF EDGE 3
C                  CZT - Z DERIVATIVE OF CT.
C                  CYT - Y DERIVATIVE OF CT.
C
      RETURN
      END
      SUBROUTINE EDGE4(IN,ZETA,XX,SGT,SGZT,SGXT)
C.....THIS SUBROUTINE DEFINES EDGE4
C.....THE USER MUST PROVIDE A DEFINITION OF SGT,SGZT,SGXT, AS A FUNCTION
C     OF ZETA (ZETA), X OR R (YY) AND ZONE NUMBER (IN).
C          INPUT: IN   - ZONE NUMBER
C                 ZETA - ZETA
C          OUTPUT: SGT  - Y OR PHI LOCATION OF EDGE 4
C                  SGZT - Z DERIVATIVE OF SGT.
C                  SGXT - X DERIVATIVE OF SGT.
C
      SGT=0.
      SGXT=0.
      SGZT=0.
      RETURN
      END
      SUBROUTINE PEDGE(IN,II,ZETA,POUTL,PINL)
C     THIS SUBROUTINE CALCULATES THE FIN EDGE LOCATION
C     REQUIRED INPUT
C          IN - ZONE NUMBER
C          II - 1 FOR EDGE 4, 2 FOR EDGE 2
C          ZETA - ZETA
C
C.....USER PROVIDES DEFINITION OF POUTL AND PINL
      POUTL=0.
      PINL=0.
```

```
      RETURN
      END
```

6.3.2 Zeus Input File - - Nose Section

The following input file is used for the hypersonic aircraft nose section run at Mach 24.5 and 1° incidence. Computations were initiated from uniform free stream conditions.

```
The following file describes the required input for ZEUS. To execute ZEUS,
replace the () symbols in the value column with the desired variable value.
Add information supporting specific options between the lines containing
the >>>>> and <<<<< symbols.  Variable enclosed by [] should be placed by
themselves on a line.  Do not eliminate any lines from this file.
                                  ------------------
VALUE  VARIABLE          DESCRIPTION
-------------------------------------------------------------------------------
              *****INTEGRATION CONTROL*****
48.    ZETAEND Terminate calculation if ZETA > ZETAEND.
5000.  KEND    Terminate calculation if STEP NUMBER > KEND.
.9     FCFL    Step size safety factor (1. > FCFL > 0.) Typically use .9 .
1.     XKI     Interior point limiting constant (2. > XKI > 0.) Typically use 1.
0      IAPR    0,1 for approximate or complete Riemann Problem. Typically use 0.
               Must use 0 for equilibrium air.
0      ISHFLUX 0,1 for using complete Riemann Problem or freestream properties
               to compute the flux at the cell edge next to the bow shock.
               Typically use 0.
1      ISHANG  0,1 for using complete Riemann Problem or Roe averaged variables
               to compute shock angle. Typically use 0. For equilibrium air, a
               value of 1 is preferred.
-------------------------------------------------------------------------------
              *****BOUNDARY CONDITIONS*****
0      NXKE    Number of edges at which default limiter setting won't be used.
               Default settings are 2 on edges 1 or 3 and 0 on edges 2 or 4.
               For each edge at which the default limiter is non-standard, add
               a line containing the following information:
               zone number (KEZ), edge number (KEE) and limiter value (XKE)
                  >>>>>start list of [KEZ,KEE,XKE]
                  <<<<<end list
0      NSUR    Number of edges not featuring default surface types.  Default
               values are 1 on edges 1 and 3 and 0 on edge 2 and 4.  Program
               will automatically account a fitted shock on edge 3 or fin
               surfaces on edges 2 or 4. For each edge at which the surface
               type is not of default, add a line that specifies the zone
               number(KSURZ), edge number(KSURE) and surface type (KSUR).
                  >>>>>start list of [KSURZ,KSURE,KSUR]
                  <<<<<end list
.9     DFAC    In case of a local wall Mach number which is to small to allow
               the flow to be turned parallel to the wall, the turn angle is
```

```
                multiplied by the constant DFAC ( 1. > DFAC > 0.).
-----------------------------------------------------------------------------
              *****OUTPUT CONTROL*****
.
                ---Printer---
250     IPRINT  Print crossflow plane if step number is evenly divided by IPRINT
1       NSKIP   Print n planes which are evenly divisible by NSKIP
3       MSKIP   Print m planes which are evenly divisible by MSKIP
1       ISKIP   Print step size if step number is evenly divided by ISKIP
.
                ---PLOTZA/Force-Pressure Summary---
0       JSPPR   In default mode, only edge 1 of each zone will be written to
                PLOTZA.  JSPPR is the number of additional edges which are not
                to be written in the default manner.  For each edge added or
                deleted from this print list,include a line which specifies
                zone number (JSPZ), edge number (JSPE) and print code (JSP).
                JSP =  1 will write this zone edge tc PLOTZA, 0 will not.
                   >>>>>start list of [JSPZ,JSPE,JSP]
                   <<<<<end list
0       JSPDIS  1 - print grid point locations for the edges specified by JSPPR.
                0 - do not print.
5       KSKIP   Write surface properties on selected edges to PLOTZA if
                if STEP NUMBER is evenly divisible by KSKIP
100     NPRT    On summary sheet, print surface pressures of edges 2 or 4 if
                n < NPRT.
1000.   DELZA   Write to PLOTZA if (ZETA - ZETA at last write) > DELZA
.
                ---PLOTZC (Plot file)
1000    IPLOT   Write to PLOTZC if STEP NUMBER is evenly divisible by IPLOT.
1000.   DELZC   Write to PLOTZC if (ZETA - ZETA at last write) > DELZC
2       IPLOTN  Number of target Z stations (ZTARGET) at which PLOTZC will
                be written.  If IPLOTN > 0,  Include a list of these
                stations on the next line (maximum of 20). Stations must be
                listed in ascending order.
                   >>>>>start ZTARGET list
21.33   48.
                   <<<<<end list
-----------------------------------------------------------------------------
             *****AERODYNAMIC DATA*****
1.      AREF    Reference area used in calculating force and moment coefficients.
1.      XLREF   Reference length used in calculating moment coefficients and
                center-of-pressure.
0       IEFORCE 0, 1 don't, do print force and moments for individual edges.
-----------------------------------------------------------------------------
             *****SEPARATION MODELING*****
0       IVIS    0,1,2 for no modeling, clipping, and forced separation. Clipping
                and forced separation can only be used in conjunction with
                cylindrical coordinates. If IVIS = 2, specify the number of
                separation lines (NSEP).
                 >>>>> NSEP
                 <<<<<
                For each separation line specify:
                ISSIDE - 0 separation line located between 0 and 180 degrees,
```

```
                    1 separation line located between 180 and 360 degrees.
            ISEP - number of points used to define the separation line.
            ZSSEP - Zeta value at which separation is started
            ZESEP - Zeta value at which separation is terminated
            PHICD - separation angle phiC (degrees)
            PHIAD - separation angle phiA (degrees)
            BETACD - sparation andgle BetaC (degrees)
            BETAAD - separation angle BetaA (degrees)
             >>>>> [ISSIDE,ISEP,ZSSEP,ZESEP,PHICD,PHIAD,BETACD,BETAAD]
             <<<<<
            A list of ISEP pairs of points (ZEPZ,ZEPP) describing the zeta
            and phi coordinates of the separation line.  This list should
            start at the most forward section and move aft. Start the list
            for each separation line on a separate line and list in same
            order as used in the above data.
              >>>>> start list of ZEPZ,ZEPP
              <<<<<
-----------------------------------------------------------------------------
          *****GAS TYPE*****
1     IGAS    0-perfect gas; 1-equilibrium air
-----------------------------------------------------------------------------
          *****UNITS *****
0     IUNITS  0-english  (p=lbf/ft**2, rho=slug/ft**3, t=rankine, xyz=ft);
              1-metric   (p=n/m**2,    rho=kg/m**3,    t=kelvin,  xyz=m).
              All input units must be consistant.  Output units are the same.
-----------------------------------------------------------------------------
          *****INITIAL DATA*****
0     IMOD    0,1 for new start or restart respectively. For a restart, the
              initial flow field is read from TAPE3.  Additional information
              is not needed and the remaining entries in this section should
              be disregarded.  A new start assumes a uniform flow field which
              is described in the following section.
.
                ---Mesh Size---
1     IZN     Number of zones.
36    NA      Number of cells in xi direction (i.e., between edges 1 and 3)
18    MA      Number of cells in eta direction (i.e., between edge 4 of zone 1
              and edge 2 of zone IZN)
.
              List the number of M planes in each zone, starting from zone 1
              and ending at zone MA.
                    >>>>>Start list of MA for each zone
18
                    <<<<<end list
.
                ---Flow Properties---
.01   ZETA    Zeta coordinate of initial data plane
1.    ALPHA   Angle of attack (degrees)
0.    BETA    Angle of yaw (degrees)
24.5  XMINF   Mach number
1.543 PINF    Pressure
1.9135e-06  DINF    Density
.
```

```
                  ---Problem Definition---
                  PROBLEM DEFINITION
1       ICORD   0,1,2 for cartesian, cylindrical or elliptic coordinates
1       IASYM   0 - no pitch plane symmetry; 1 - pitch plane symmetry.
1       ISHOCK  Set to 1 if edge 3 is to be fitted by the calculation
                (either as a shock or sonic line); otherwise set to 0.
                ISHOCK = 1 is only valid for ICORD =1 or 2. If edge 3
                is to be fitted, the r and phi (cylindrical coordinates)
                or s, tau (elliptic coordinates) of the shock location on each
                M plane, (SS, SSZ) must be defined, starting from M = 1,
                etc,.
                       >>>>>Start list of [SS,SSZ]
.01    5.
 01   15.
.01   25.
.01   35.
.01   45.
.01   55.
.01   65.
.01   75.
.01   85.
.01   95.
.01  105.
.01  115.
.01  125.
.01  135.
.01  145.
.01  155.
.01  165.
.01  175.
                       >>>>>End list
-------------------------------------------------------------------------------
*****MESH DEFINITION*****
0       IMESHF  0 for uniform mesh in xi direction.  1 for clustered mesh.  If
                a clustered mesh is to be used, the clustering function (FN) in
                the xi direction at the NA cell centers must be defined
                starting at cell 1, located adjacent to edge 1 and moving to
                edge 3 (usually body to shock).
                     >>>>>start list of FN
                     >>>>>end list
0       IMESHG  0 for uniform mesh in eta direction.  1 for clustered mesh.  If
                a clustered mesh is to be used, the clustering function (GN) in
                the eta direction at the MA(i) cell centers in each zone must
                be defined, starting with zone 1 and ending with zone IZN. Start
                with cell 1, located adjacent to edge 4,and end at the cell
                adjacent to edge 2.  The list for each zone should be started
                on a new card
                     >>>>>>>>start list GN
                             end list<<<<<<<
```

6.3.3 Geometry — Wing Section

This section of the hypersonic aircraft is run using a two zone model with NA=72, MAZ(1)=36 and MAZ(2)=36 mesh. The geometry is as follows:

ZONE 1, EDGE 1: $b = \zeta \tan\theta_c$, $b_z = \tan\theta_c$, $b_\phi = 0$.
ZONE 1, EDGE 2: top of the wing surface, OFFSET = $\pi/2$.
ZONE 1, EDGE 3: outer boundary defined outside the bow shock in the free stream.
ZONE 1, EDGE 4: leeward pitch plane symmetry.
ZONE 2, EDGE 1: $b = \zeta \tan\theta_c$, $b_z = \tan\theta_c$, $b_\phi = 0$.
ZONE 2, EDGE 2: windward pitch plane symmetry.
ZONE 2, EDGE 3: outer boundary defined outside the bow shock in the free stream.
ZONE 2, EDGE 4: bottom of the wing surface, OFFSET = $\pi/2$.

The top of the wing surface is described in terms of b_I, b_{I_z} and x_m parameters for a flat fin surface (described in Reference 2) as follows:

$$
\begin{aligned}
x_0 &= -2.048642 \\
x_{LE} &= x_0 - (\zeta - 33.75)\tan 1^o \\
y_{LE} &= (\zeta - 33.75)\tan 12^o \\
x_{ru} &= 2x_0 - x_{LE} \\
y_{ru} &= 0 \\
x_m &= (x_{LE} - x_{ru})/(y_{LE} - y_{ru}) \\
b_I &= x_{ru} \\
b_{I_z} &= \tan 1^o
\end{aligned}
$$

Similarly, for the bottom of the wing surface,

$$
\begin{aligned}
x_0 &= -2.048642 \\
x_{LE} &= x_0 - (\zeta - 33.75)\tan 1^o \\
x_m &= 0 \\
b_I &= x_{LE} \\
b_{I_z} &= -\tan 1^o
\end{aligned}
$$

Knowledge of b_I, b_{I_z} and x_m allows the appropriate σ and ω functions to be calculated using coding described in Reference 2. The wing edges are computed as follows:

$$\textit{Inner Edge}: \quad \omega = 0$$

$$\textit{Outer Edge}: \quad \begin{array}{ll} \Omega = 0 & if\ z < 48.717 \\ \Omega = \sqrt{x_{LE}^2 + y_{LE}^2} & otherwise \end{array}$$

The required geometry routines for the wing section are as follows:

```
      SUBROUTINE BCONST(ZETA,BOFZ,BZOFZ)
C.....THIS SUBROUTINE CALCULATES THE MAJOR AXIS OF AN ELLIPSE
C     (BOFZ) AND ITS Z DERIVATIVE (BZOFZ)
      RETURN
      END
      SUBROUTINE EDGE1(IN,ZETA,YY,BT,BZT,BYT)
C.....THIS SUBROUTINE DEFINES EDGE1
C.....USER DEFINES BT,BZT AND BYT AS A FUNCTION OF ZETA (ZETA)
C     Y OR PHI (YY) AND ZONE NUMBER (IN).
C          INPUT: IN   - ZONE NUMBER
C                 ZETA - ZETA
C          OUTPUT: BT  - X OR R LOCATION OF EDGE 1
C                  BZT - Z DERIVATIVE OF BT.
C                  BYT - Y DERIVATIVE OF BT.
      BYT=0.
      BZT=0.
      BT=5.08333
      IF(ZETA.LE.63.0)THEN
      THETAC=4.6
      PI=4.*ATAN(1.)
      RAD=PI/180.
      THETAR=THETAC*RAD
      BT=ZETA*TAN(THETAR)
      BZT=TAN(THETAR)
      BYT=0.
      ENDIF
      RETURN
      END
      SUBROUTINE EDGE2(IN,ZETA,XX,THT,THZT,THXT)
C.....THIS SUBROUTINE DEFINES EDGE2
C.....USER DEFINES THT,THZT AND THXT AS A FUNCTION OF ZETA (ZETA)
C     X OR R (XX) AND ZONE NUMBER (IN).
C          INPUT: IN   - ZONE NUMBER
C                 ZETA - ZETA
C          OUTPUT: THT  - Y OR PHI LOCATION OF EDGE 2
C                  THZT - Z DERIVATIVE OF THT.
C                  THXT - X DERIVATIVE OF THT.
C
      PI=4.*ATAN(1.)
      RAD=PI/180.
      IF(IN.EQ.1)THEN
```

```
        OFFSET=PI/2.
        TAN12=TAN(12.*RAD)
        TAN1=TAN(1.*RAD)
        Y0=0.
        X0=-2.048642
        YLE=(ZETA-33.75)*TAN12
        XLE=X0-(ZETA-33.75)*TAN1
        RLE=SQRT(XLE*XLE+YLE*YLE)
        XBWI=XLE
        XRU=2.*X0-XBWI
        YRU=0.
        IF(XX.LE.RLE.AND.ZETA.GE.48.717)THEN
          XM=(XLE-XRU)/(YLE-YRU)
          BI=XRU
          BIZ=TAN1
        ELSE
          XM=(XLE-X0)/(YLE-Y0)
          BI=X0
          BIZ=0.
        ENDIF
      ELSE IF(IN.EQ.2)THEN
        OFFSET=PI
        XM=0.
        BI=0.
        BIZ=0.
      ENDIF
      XM2P1=XM*XM+1.
      SINT=(BI/XX+XM*SQRT(XM2P1-(BI/XX)**2))/XM2P1
      COST=SQRT(1.-SINT*SINT)
      C1=COST+XM*SINT
      THT=OFFSET-ASIN(SINT)
      THXT=BI/(XX*XX*C1)
      THZT=-BIZ/(XX*C1)
      RETURN
      END
      SUBROUTINE EDGE3(IN,ZETA,PHI,CT,CZT,CXT)
C.....USER DEFINES CT,CZT,CYT IF BOW SHOCK IS NOT BEING TRACKED.
C     Y OR PHI (YY) AND ZONE NUMBER (IN).
C          INPUT: IN   - ZONE NUMBER
C                 ZETA - ZETA
C          OUTPUT: CT  - X OR R LOCATION OF EDGE 3
C                  CZT - Z DERIVATIVE OF CT.
C                  CYT - Y DERIVATIVE OF CT.
C
      PI=4.*ATAN(1.)
      RAD=PI/180.
      BT=5.08333
      IF(ZETA.LE.63.0)THEN
        TAN4P6=TAN(4.6*RAD)
        BT=ZETA*TAN4P6
      ENDIF
      CFAC1=1.3
      CT1=BT*CFAC1
```

```
      CZT=TAN4P6*CFAC1
      CXT=0.
      CT2=0.
      IF(ZETA.GT.48.717)THEN
        CFAC2=1.1
        TAN12=TAN(12.*RAD)
        TAN1=TAN(1.*RAD)
        X0=-2.048642
        YLE=(ZETA-33.75)*TAN12
        XLE=X0-(ZETA-33.75)*TAN1
        RLE=SQRT(XLE*XLE+YLE*YLE)
        CT2=RLE*CFAC2
        CZT2=CFAC2*(-TAN1*XLE+TAN12*YLE)/RLE
      ENDIF
      CT=AMAX1(CT1,CT2)
      IF(CT2.GE.CT1)CZT=CZT2
      RETURN
      END
      SUBROUTINE EDGE4(IN,ZETA,XX,SGT,SGZT,SGXT)
C.....THIS SUBROUTINE DEFINES EDGE4
C.....THE USER MUST PROVIDE A DEFINITION OF SGT,SGZT,SGXT, AS A FUNCTION
C     OF ZETA (ZETA), X OR R (YY) AND ZONE NUMBER (IN).
C          INPUT: IN   - ZONE NUMBER
C                 ZETA - ZETA
C          OUTPUT: SGT  - Y OR PHI LOCATION OF EDGE 4
C                  SGZT - Z DERIVATIVE OF SGT.
C                  SGXT - X DERIVATIVE OF SGT.
C
      PI=4.*ATAN(1.)
      RAD=PI/180.
      IF(IN.EQ.1)THEN
        OFFSET=0.
        XM=0.
        BI=0.
        BIZ=0.
      ELSE IF(IN.EQ.2)THEN
        OFFSET=PI/2.
        TAN12=TAN(12.*RAD)
        TAN1=TAN(1.*RAD)
        Y0=0.
        X0=-2.048642
        YLE=(ZETA-33.75)*TAN12
        XLE=X0-(ZETA-33.75)*TAN1
        RLE=SQRT(XLE*XLE+YLE*YLE)
        IF(XX.LE.RLE.AND.ZETA.GE.48.717)THEN
          XM=0.
          BI=XLE
          BIZ=-TAN1
        ELSE
          XM=(XLE-X0)/(YLE-Y0)
          BI=X0
          BIZ=0.
        ENDIF
```

```
      ENDIF
      XM2P1=XM*XM+1.
      SINT=(BI/XX+XM*SQRT(XM2P1-(BI/XX)**2))/XM2P1
      COST=SQRT(1.-SINT*SINT)
      C1=COST+XM*SINT
      SGT=OFFSET-ASIN(SINT)
      SGXT=BI/(XX*XX*C1)
      SGZT=-BIZ/(XX*C1)
      RETURN
      END
      SUBROUTINE PEDGE(IN,II,ZETA,POUTL,PINL)
C     THIS SUBROUTINE CALCULATES THE FIN EDGE LOCATION
C     REQUIRED INPUT
C          IN - ZONE NUMBER
C          II - 1 FOR EDGE 4, 2 FOR EDGE 2
C          ZETA - ZETA
C
C.....USER PROVIDES DEFINITION OF POUTL AND PINL
      POUTL=0.
      PINL=0.
      IF(ZETA.GE.48.717)THEN
        IF((IN.EQ.1.AND.II.EQ.2).OR.(IN.EQ.2.AND.II.EQ.1))THEN
          PI=4.*ATAN(1.)
          RAD=PI/180.
          TAN12=TAN(12.*RAD)
          TAN1=TAN(1.*RAD)
          X0=-2.048642
          YLE=(ZETA-33.75)*TAN12
          XLE=X0-(ZETA-33.75)*TAN1
          POUTL=SQRT(XLE*XLE+YLE*YLE)
        ENDIF
      ENDIF
      RETURN
      END
```

6.3.4 CONVERT Input File

The flow field is rezoned from a one zone 36 x 18 mesh into two zones each with a 72 x 36 mesh using the program CONVERT. The input file for CONVERT is as follows:

```
INPUT file for CONVERT. To execute, append the geometry subroutines
BCONST, EDGE1, EDGE2, EDGE3, EDGE4, and PEDGE to CONVERT and execute
using this file as input, with () replaced by the desired values and
required lists inserted between lines containing >>>>> and <<<<<.  Do
not delete or add any lines to this file.
-----------------------------------------------------------------
VALUE  VARIABLE   DESCRIPTION
1       IASYMN   symmetry of the final flow field; 1 - symmetric
```

```
                  0 - asymmetric
2       IZNN      number of new zones
72      NAN       Number of cells between edge 1 and  3 of new mesh.
72      MAN       Number of cells between edge 4, zone 1 and edge2,
                  zone IZNN.  The number of cells in each zone between
                  edges 4 and 2 must also be specified, starting at
                  zone 1 .
                  >>>>>Start MAZ(1), MAZ(2), ... MAZ(IZZN)
36   36
                  <<<<<End list
0       ISHOCKN   0 - Edge 3 will not be fitted with a shock
                  1 - Shock fitted on edge 3
0       IMESHF    0 - uniform mesh in xi direction of new mesh.
                  1 - clustered mesh.  If a clustered mesh is used,
                  the clustering (FNN) must be specified, starting
                  at the cell center adjacent to  edge 1 and ending
                  at the cell center adjacent to edge 3.
                  >>>>>Start list FNN
                  <<<<<End list of FNN
0       IMESHG    0 - uniform mesh between edges 2 and 4 of new mesh.
                  1 - clustered mesh.  If a clustered mesh is used,
                  the clustering (GNN) for each zone must be
                  specified, starting with zone 1 and ending at zone
                  IZN. The clustering for each zone should be started
                  on a new card. Beginning this list at the cell
                  center adjacent to edge 4 and terminate it at the
                  cell center next to edge 2.
                  >>>>>Start list GNN
                  <<<<<End list of GNN
```

6.3.5 Zeus Input File — Wing Section

The following ZEUS input file is used for the wing section:

```
The following file describes the required input for ZEUS. To execute ZEUS,
replace the () symbols in the value column with the desired variable value.
Add information supporting specific options between the lines containing
the >>>>> and <<<<< symbols.  Variable enclosed by [] should be placed by
themselves on a line.  Do not eliminate any lines from this file.
                          ------------------
VALUE  VARIABLE          DESCRIPTION
-------------------------------------------------------------------------------
              *****INTEGRATION CONTROL*****
114.25 ZETAEND Terminate calculation if ZETA > ZETAEND.
5000.  KEND    Terminate calculation if STEP NUMBER > KEND.
.9     FCFL    Step size safety factor (1. > FCFL > 0.) Typically use .9 .
1.     XKI     Interior point limiting constant (2. > XKI > 0.) Typically use 1.
0      IAPR    0,1 for approximate or complete Riemann Problem. Typically use 0.
```

```
                Must use 0 for equilibrium air.
0       ISHFLUX 0,1 for using complete Riemann Problem or freestream properties
                to compute the flux at the cell edge next to the bow shock.
                Typically use 0.
1       ISHANG  0,1 for using complete Riemann Problem or Roe averaged variables
                to compute shock angle. Typically use 0. For equilibrium air, a
                value of 1 is preferred.
-----------------------------------------------------------------------------
              *****BOUNDARY CONDITIONS*****
0       NXKE    Number of edges at which default limiter setting won't be used.
                Default settings are 2 on edges 1 or 3 and 0 on edges 2 or 4.
                For each edge at which the default limiter is non-standard, add
                a line containing the following information:
                zone number (KEZ), edge number (KEE) and limiter value (XKE)
                   >>>>>start list of [KEZ,KEE,XKE]
                   <<<<<end list
2       NSUR    Number of edges not featuring default surface types.  Default
                values are 1 on edges 1 and 3 and 0 on edge 2 and 4.  Program
                will automatically account a fitted shock on edge 3 or fin
                surfaces on edges 2 or 4. For each edge at which the surface
                type is not of default, add a line that specifies the zone
                number(KSURZ), edge number(KSURE) and surface type (KSUR).
                   >>>>>start list of [KSURZ,KSURE,KSUR]
1  3  2
2  3  2
                   <<<<<end list
.9      DFAC    In case of a local wall Mach number which is to small to allow
                the flow to be turned parallel to the wall, the turn angle is
                multiplied by the constant DFAC ( 1. > DFAC > 0.).
-----------------------------------------------------------------------------
              *****OUTPUT CONTROL*****
.
                ---Printer---
200     IPRINT  Print crossflow plane if step number is evenly divided by IPRINT
1       NSKIP   Print n planes which are evenly divisible by NSKIP
6       MSKIP   Print m planes which are evenly divisible by MSKIP
1       ISKIP   Print step size if step number is evenly divided by ISKIP
.
                ---PLOTZA/Force-Pressure Summary---
2       JSPPR   In default mode, only edge 1 of each zone will be written to
                PLOTZA.  JSPPR is the number of additional edges which are not
                to be written in the default manner.  For each edge added or
                deleted from this print list,include a line which specifies
                zone number (JSPZ), edge number (JSPE) and print code (JSP).
                JSP =  1 will write this zone edge to PLOTZA, 0 will not.
                   >>>>>start list of [JSPZ,JSPE,JSP]
1  2  1
2  4  1
                   <<<<<end list
0       JSPDIS  1 - print grid point locations for the edges specified by JSPPR.
                0 - do not print.
1       KSKIP   Write surface properties on selected edges to PLOTZA if
                if STEP NUMBER is evenly divisible by KSKIP
```

```
100     NPRT     On summary sheet, print surface pressures of edges 2 or 4 if
                 n < NPRT.
1000.   DELZA    Write to PLOTZA if (ZETA - ZETA at last write) > DELZA
.
                 ---PLOTZC (Plot file)
1000    IPLOT    Write to PLOTZC if STEP NUMBER is evenly divisible by IPLOT.
1000.   DELZC    Write to PLOTZC if (ZETA - ZETA at last write) > DELZC
2       IPLOTN   Number of target Z stations (ZTARGET) at which PLOTZC will
                 be written.  If IPLOTN > 0,  Include a list of these
                 stations on the next line (maximum of 20). Stations must be
                 listed in ascending order.
                    >>>>>start ZTARGET list
63.917  108.67
                    <<<<<end list
-------------------------------------------------------------------------------
             *****AERODYNAMIC DATA*****
1.      AREF     Reference area used in calculating force and moment coefficients.
1.      XLREF    Reference length used in calculating moment coefficients and
                 center-of-pressure.
0       IEFORCE  0, 1 don't, do print force and moments for individual edges.
-------------------------------------------------------------------------------
             *****SEPARATION MODELING*****
0       IVIS     0,1,2 for no modeling, clipping, and forced separation. Clipping
                 and forced separation can only be used in conjunction with
                 cylindrical coordinates. If IVIS = 2, specify the number of
                 separation lines (NSEP).
                  >>>>> NSEP
                  <<<<<
                 For each separation line specify:
                 ISSIDE - 0 separation line located between 0 and 180 degrees,
                          1 separation line located between 180 and 360 degrees.
                 ISEP - number of points used to define the separation line.
                 ZSSEP - Zeta value at which separation is started
                 ZESEP - Zeta value at which separation is terminated
                 PHICD - separation angle phiC (degrees)
                 PHIAD - separation angle phiA (degrees)
                 BETACD - sparation andgle BetaC (degrees)
                 BETAAD - separation angle BetaA (degrees)
                  >>>>> [ISSIDE,ISEP,ZSSEP,ZESEP,PHICD,PHIAD,BETACD,BETAAD]
                  <<<<<
                 A list of ISEP pairs of points (ZEPZ,ZEPP) describing the zeta
                 and phi coordinates of the separation line.  This list should
                 start at the most forward section and move aft. Start the list
                 for each separation line on a separate line and list in same
                 order as used in the above data.
                   >>>>> start list of ZEPZ,ZEPP
                   <<<<<
-------------------------------------------------------------------------------
             *****GAS TYPE*****
1       IGAS     0-perfect gas; 1-equilibrium air
-------------------------------------------------------------------------------
             *****UNITS *****
0       IUNITS   0-english  (p=lbf/ft**2, rho=slug/ft**3, t=rankine, xyz=ft);
```

```
                1-metric   (p=n/m**2,    rho=kg/m**3,    t=kelvin,  xyz=m).
                All input units must be consistant.  Output units are the same.
-----------------------------------------------------------------------------
            *****INITIAL DATA*****
1       IMOD    0,1 for new start or restart respectively. For a restart, the
                initial flow field is read from TAPE3.  Additional information
                is not needed and the remaining entries in this section should
                be disregarded.  A new start assumes a uniform flow field which
                is described in the following section.
.
                  ---Mesh Size---
()      IZN     Number of zones.
()      NA      Number of cells in xi direction (i.e., between edges 1 and 3)
()      MA      Number of cells in eta direction (i.e., between edge 4 of zone 1
                and edge 2 of zone IZN)
.
                List the number of M planes in each zone, starting from zone 1
                and ending at zone MA.
                      >>>>>Start list of MA for each zone
                      <<<<<end list
.
                  ---Flow Properties---
()      ZETA    Zeta coordinate of initial data plane
()      ALPHA   Angle of attack (degrees)
()      BETA    Angle of yaw (degrees)
()      XMINF   Mach number
()      PINF    Pressure
()      DINF    Density
.
                  ---Problem Definition---
                  PROBLEM DEFINITION
()      ICORD   0,1,2 for cartesian, cylindrical or elliptic coordinates
()      IASYM   0 - no pitch plane symmetry; 1 - pitch plane symmetry.
()      ISHOCK  Set to 1 if edge 3 is to be fitted by the calculation
                (either as a shock or sonic line); otherwise set to 0.
                ISHOCK = 1 is only valid for ICORD =1 or 2. If edge 3
                is to be fitted, the r and phi (cylindrical coordinates)
                or s, tau (elliptic coordinates) of the shock location on each
                M plane, (SS, SSZ) must be defined, starting from M = 1,
                etc,.
                       >>>>>Start list of [SS,SSZ]
                       >>>>>End list
-----------------------------------------------------------------------------
*****MESH DEFINITION*****
0       IMESHF  0 for uniform mesh in xi direction.  1 for clustered mesh.  If
                a clustered mesh is to be used, the clustering function (FN) in
                the xi direction at the NA cell centers must be defined
                starting at cell 1, located adjacent to edge 1 and moving to
                edge 3 (usually body to shock).
                     >>>>>start list of FN
                     >>>>>end list
0       IMESHG  0 for uniform mesh in eta direction.  1 for clustered mesh.  If
                a clustered mesh is to be used, the clustering function (GN) in
```

```
the eta direction at the MA(i) cell centers in each zone must
be defined, starting with zone 1 and ending with zone IZN. Start
with cell 1, located adjacent to edge 4,and end at the cell
adjacent to edge 2.  The list for each zone should be started
on a new card
     >>>>>>>>start list GN
             end list<<<<<<<
```

6.3.6 Results

Computations were performed for the hypersonic airplane configuration of Figure 9 at Mach 24.5 and 1° incidence. A comparison of pressure profiles between ZEUS and the Parabolized Navier-Stokes computations of Korte[17] on the windward symmetry plane at z = 108.67 feet shows good agreement except near the surface where viscous effects are not predicted by ZEUS. In Figure 10, pressure contours are also computed at an axial station near the end of the body (z = 108.67 feet) for equilibrium air. Computations illustrate good agreement except in the vicinity of the wing tip where ZEUS does not effectively predict the viscous layer.

6.4 CONCLUDING REMARKS

The ZEUS code has been extended to high Mach numbers by incorporating the high-temperature effects of air in chemical equilibrium. These high-temperature effects are accounted for by using the curve fits of Reference 10 to compute the thermodymamic properties of equilibrium air.

Various hypersonic missile-type bodies were computed including sharp cones, a spherically blunt nosed cylinder and a hypersonic aircraft. ZEUS predicted the smaller shock layer thickness and lower temperatures characteristic of equilibrium chemically reacting air. The computed ZEUS results compare well with measured high-temperature effects and other computational efforts except in regions where viscous effects are dominant. This enhanced version of ZEUS is an economic predictive tool for missiles and will help provide accurate predictions in support of future hypersonic weapons.

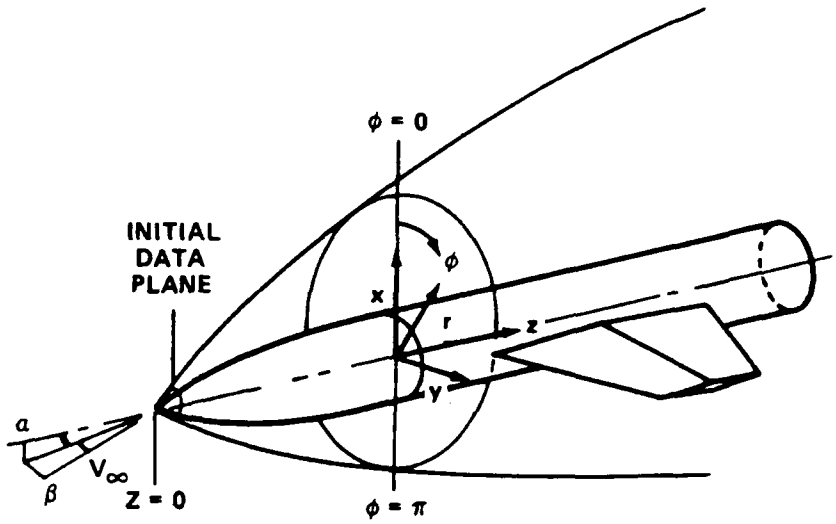

FIGURE 1. CARTESIAN AND CYLINDRICAL COORDINATE SYSTEM FOR ZEUS, A SPACE-MARCHING EULER SOLVER

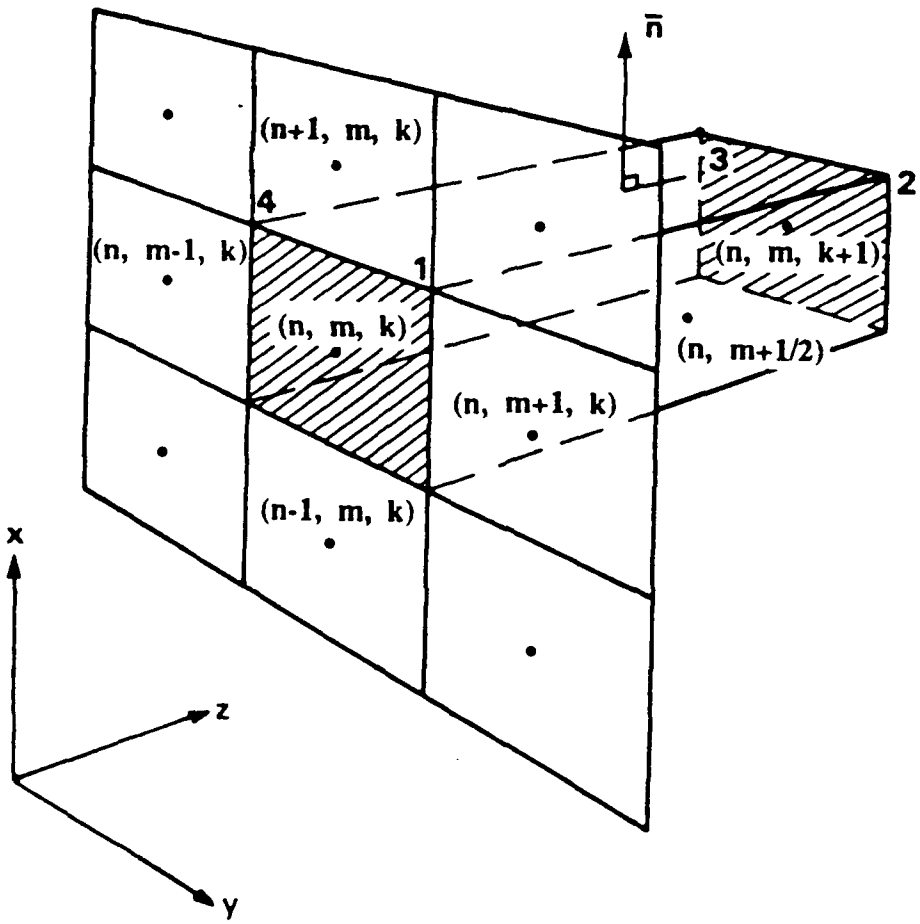

FIGURE 2. CONTROL VOLUME NOMENCLATURE

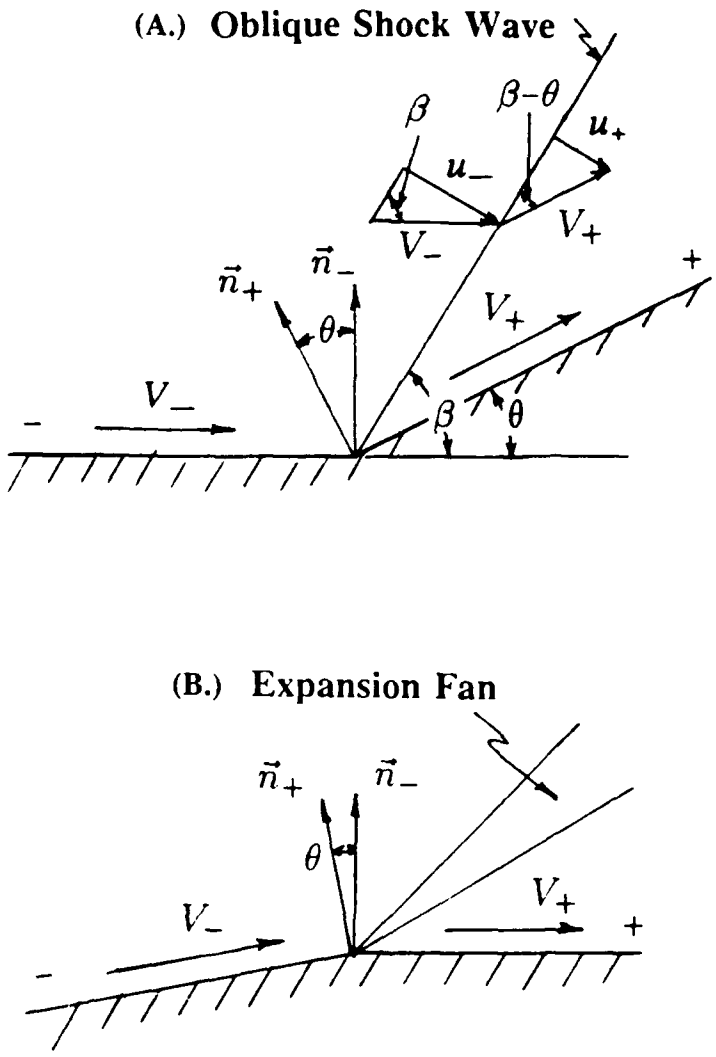

FIGURE 3. FLOW DISCONTINUITIES IN THE CASE $\frac{V_-}{a} > 1$ (A.) OBLIQUE SHOCK WAVE (B.) EXPANSION FAN

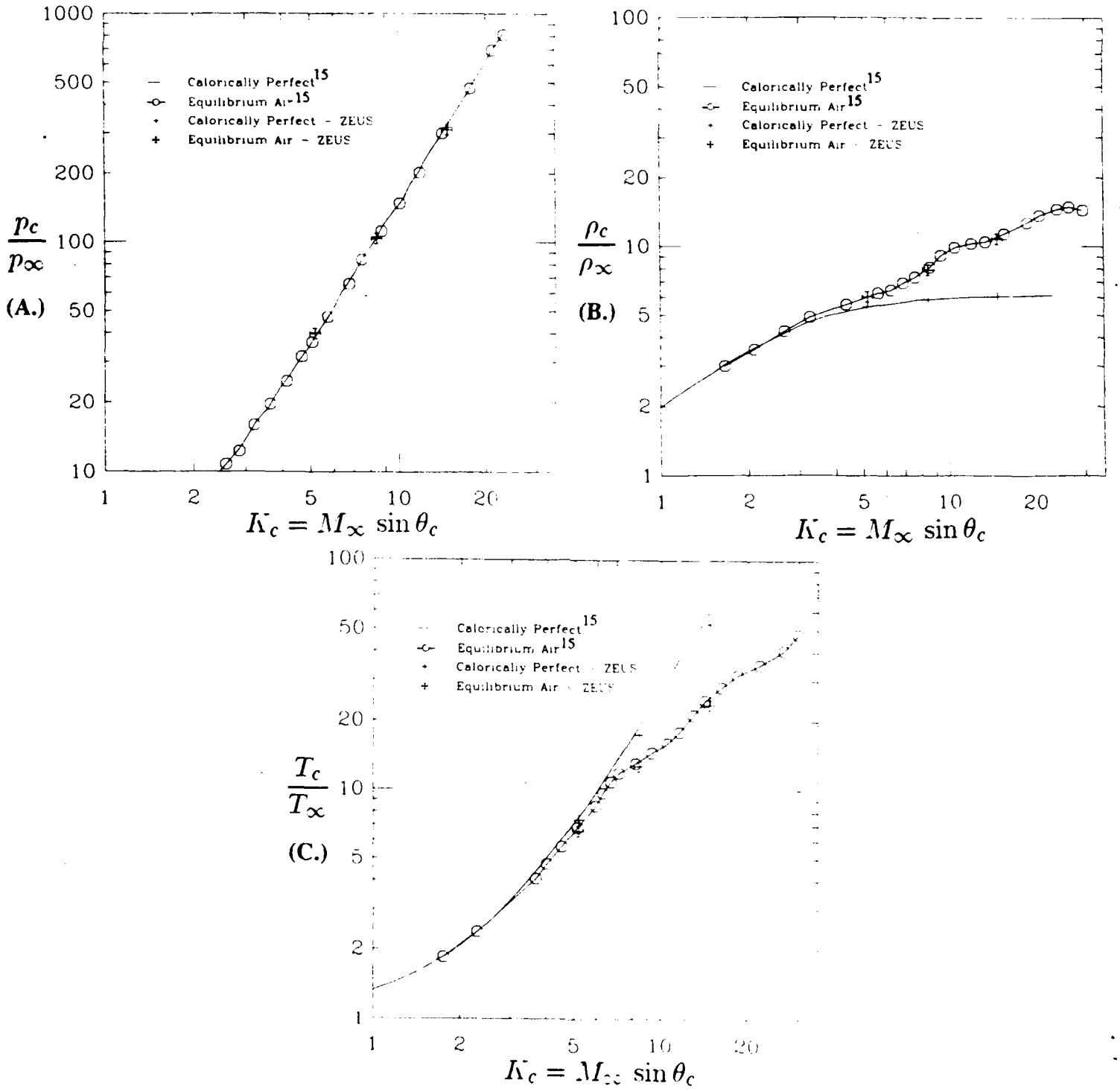

FIGURE 4. SURFACE (A.) PRESSURES (B.) DENSITIES (C.) TEMPERATURES ON CONES AT AN ALTITUDE OF 100,000 FT. A COMPARISON BETWEEN CALORICALLY PERFECT AND EQUILIBRIUM AIR RESULTS FOR ZEUS AND HUDGINS[15] COMPUTATIONS

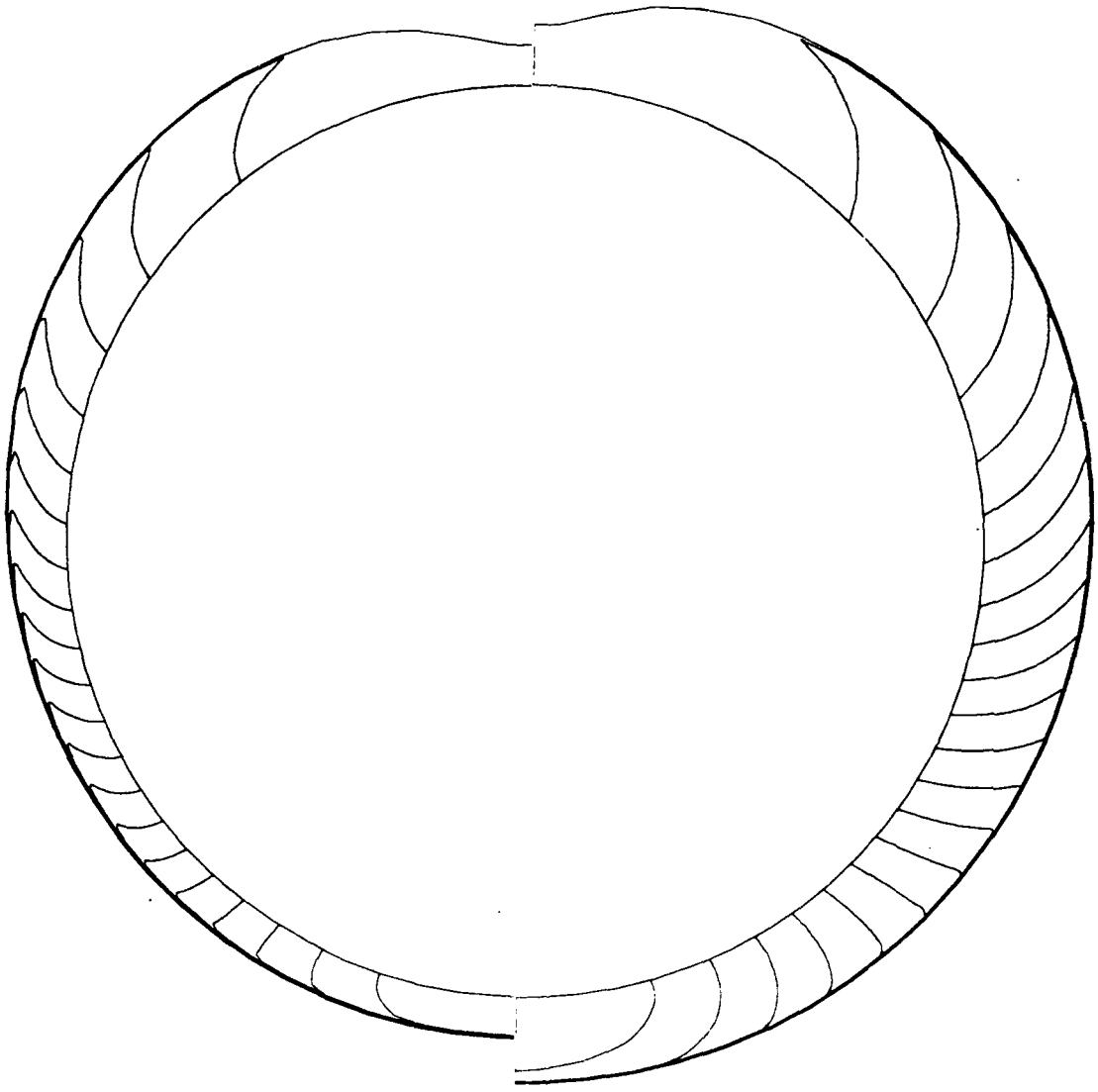

(A.) EQUILIBRIUM AIR (B.) CALORICALLY PERFECT AIR

FIGURE 5. COMPUTED PRESSURE CONTOURS FOR A SHARP CONE WITH A 25° HALF-ANGLE AT MACH 20, AN INCIDENCE OF 20°, AND AN ALTITUDE OF 100,000 FT. RESULTS ARE COMPARED BETWEEN (A.) EQUILIBRIUM AIR AND (B.) CALORICALLY PERFECT

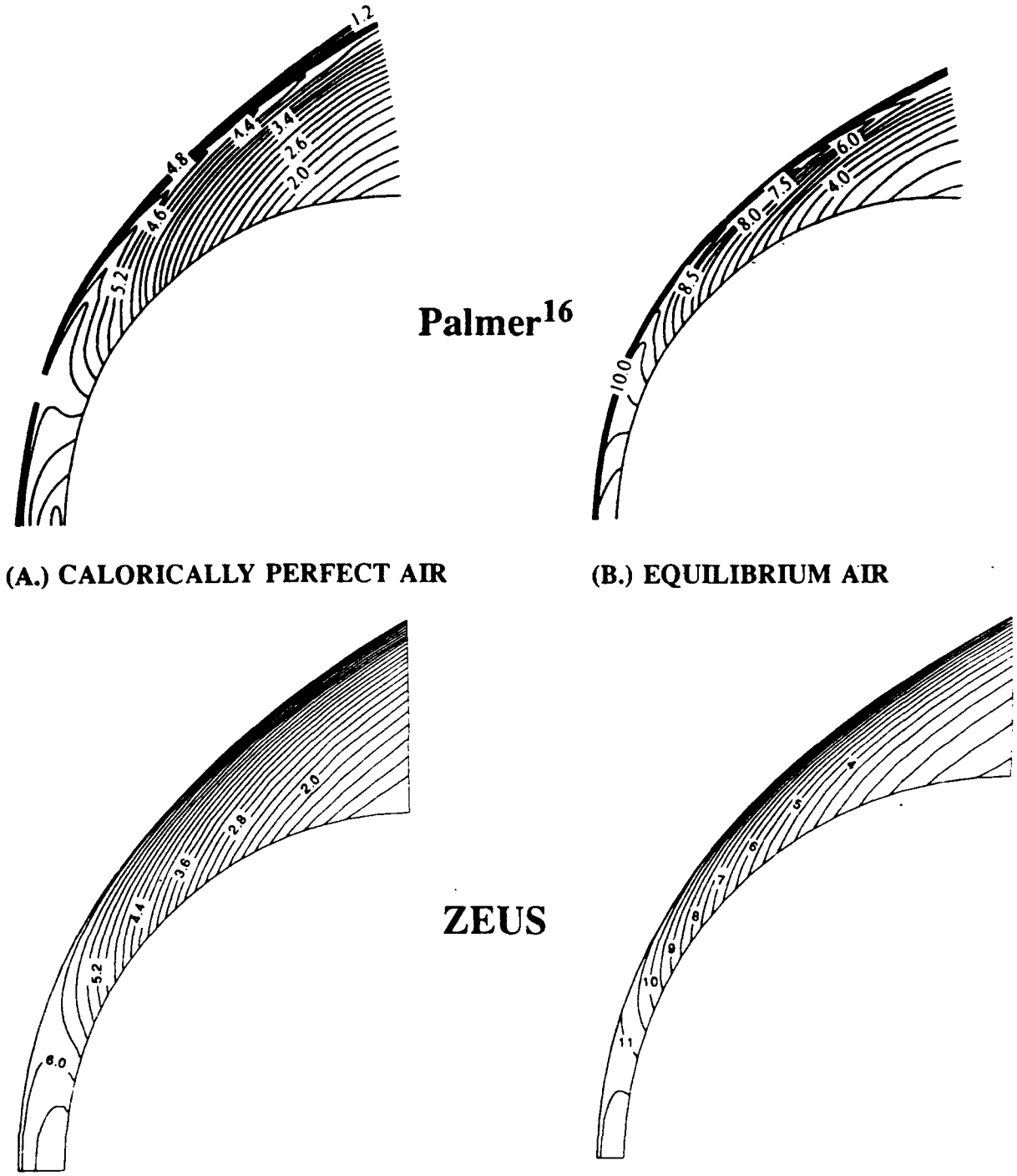

FIGURE 6. DENSITY CONTOURS FOR A HYPERSONIC SPHERICALLY BLUNT NOSED CYLINDER AT MACH 20 AND AN INCIDENCE OF 0° FOR (A.) CALORICALLY PERFECT AND (B.) EQUILIBRIUM CHEMICALLY REACTING AIR. RESULTS ARE COMPARED WITH COMPUTATIONS OF ZEUS AND PALMER[16]

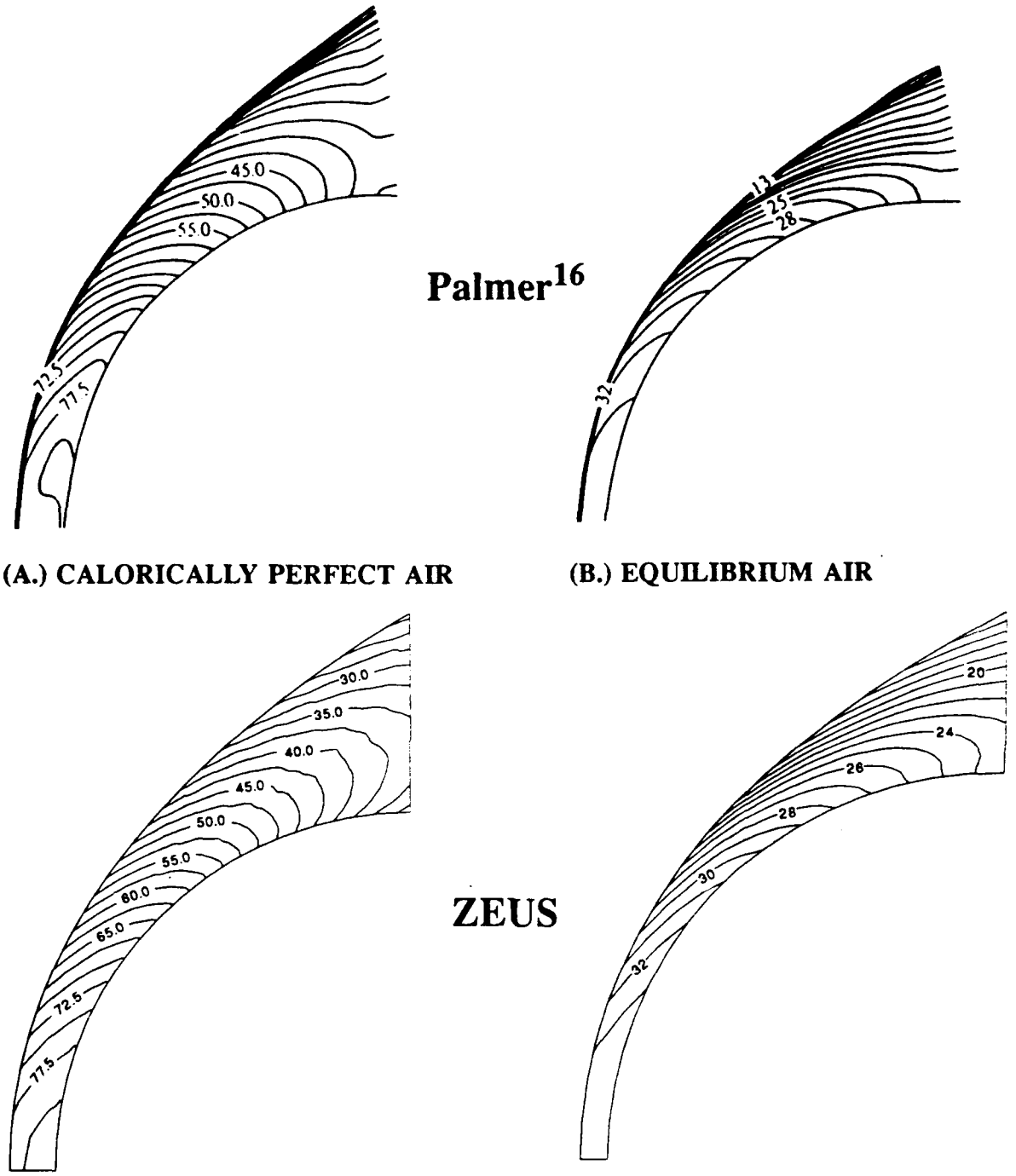

FIGURE 7. TEMPERATURE CONTOURS FOR A HYPERSONIC SPHERICALLY BLUNT NOSED CYLINDER AT MACH 20 AND AN INCIDENCE OF 0° FOR (A.) CALORICALLY PERFECT AND (B.) EQUILIBRIUM CHEMICALLY REACTING AIR. RESULTS ARE COMPARED WITH COMPUTATIONS OF ZEUS AND PALMER[16]

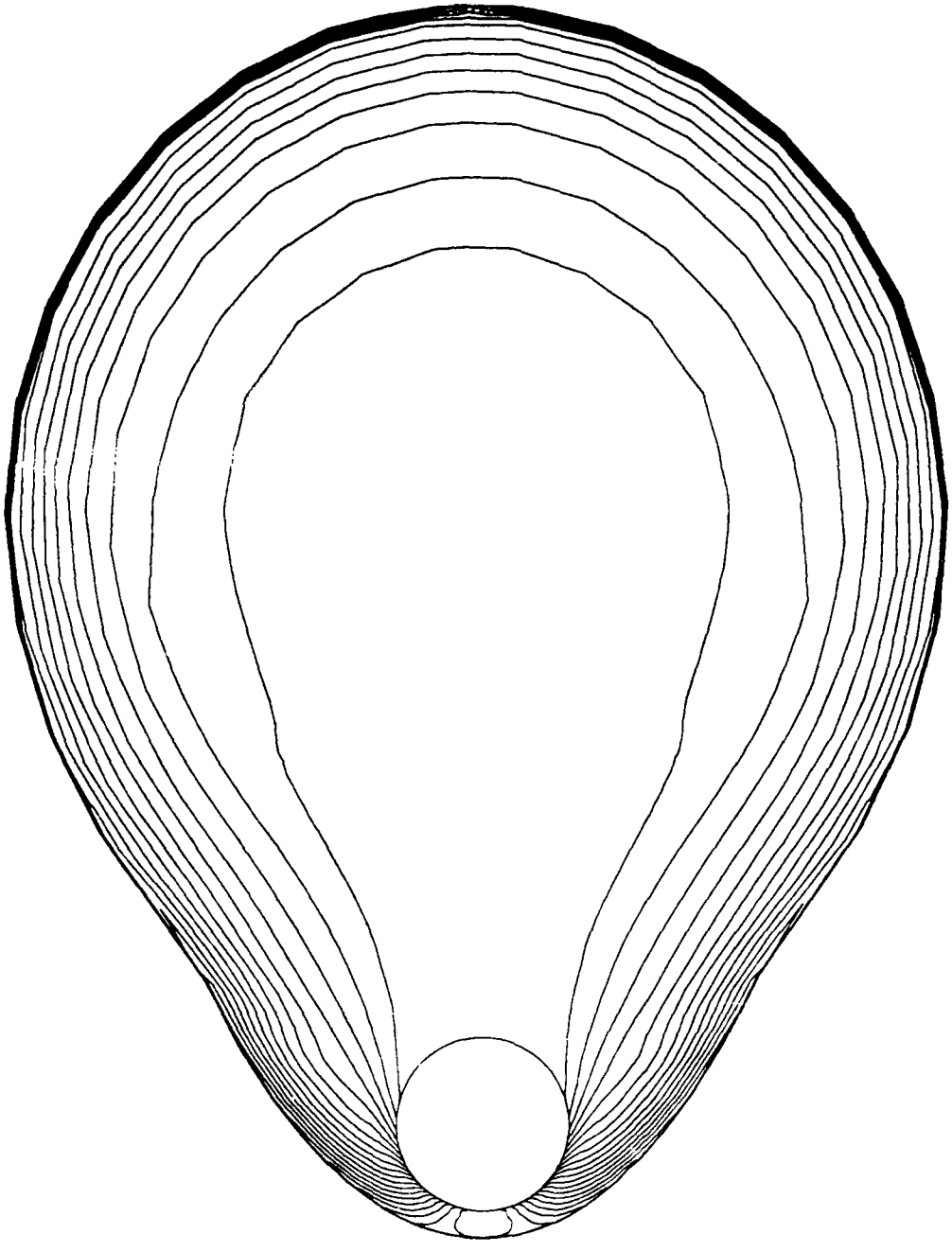

FIGURE 8. COMPUTED DENSITY CONTOURS FOR A HYPERSONIC SPHERICALLY BLUNT NOSED CYLINDER AT MACH 20 AND AN INCIDENCE OF 20° FOR EQUILIBRIUM AIR AT AN AXIAL STATION 9.5 DIAMETERS DOWNSTREAM

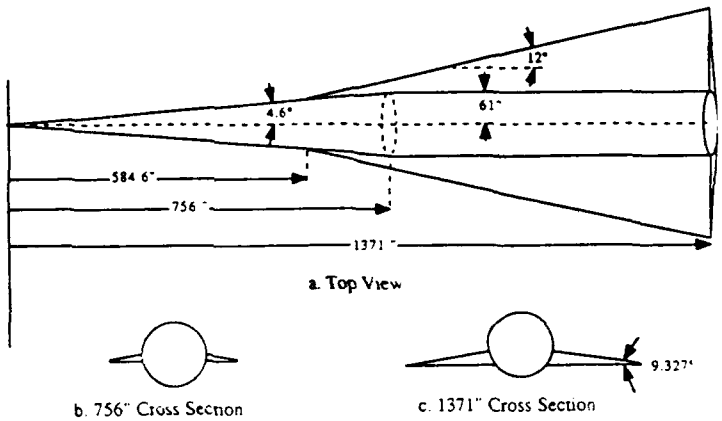

Generic hypersonic airplane configuration.[17]

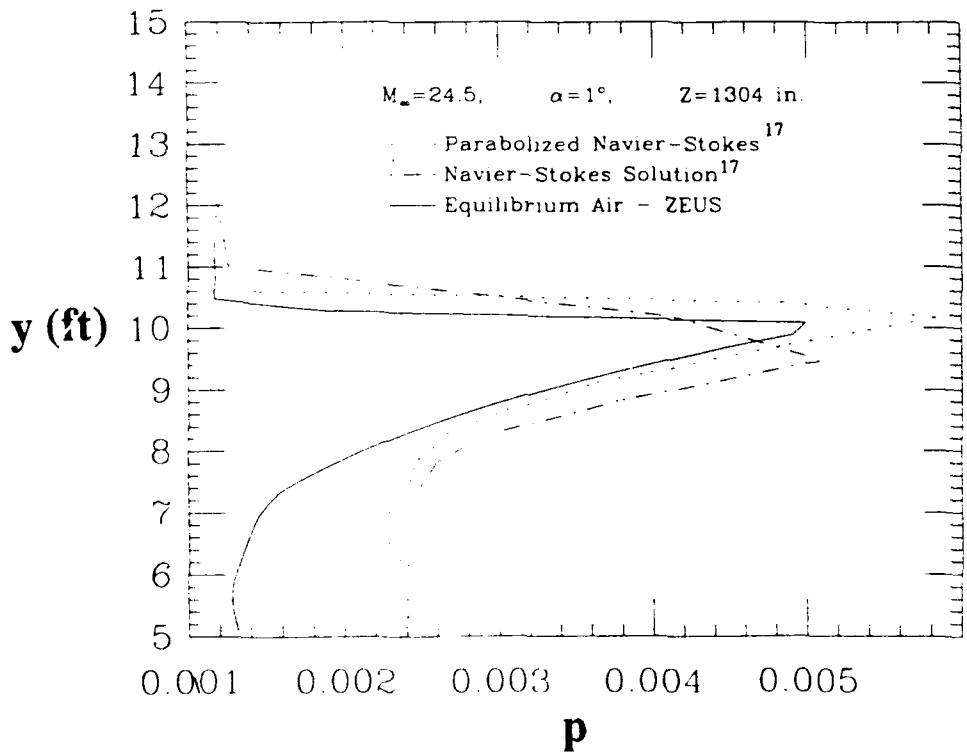

FIGURE 9. COMPARISON OF COMPUTED PRESSURE PROFILES FOR EQUILIBRIUM AIR ON THE WINDWARD SYMMETRY PLANE AT MACH 24.5, AN INCIDENCE OF 1° AND Z = 108.67 FT FOR ZEUS AND THE PNS SOLUTIONS OF KORTE[17]

ZEUS (Euler)

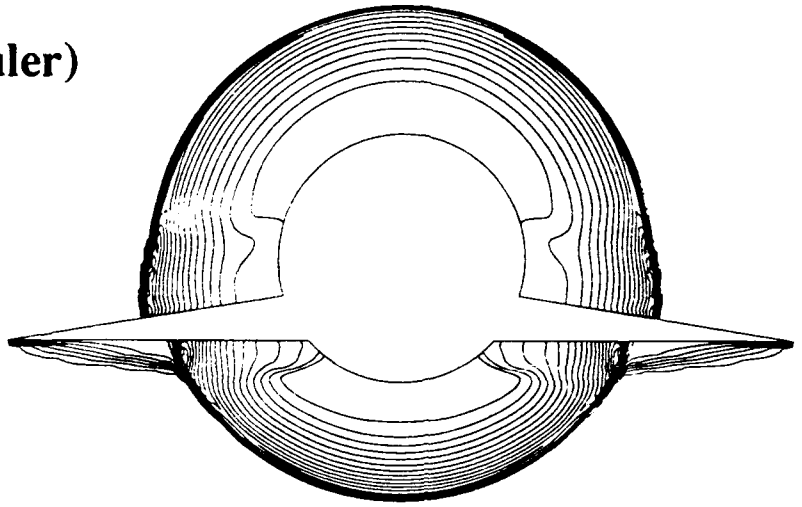

Korte[17] (PNS)

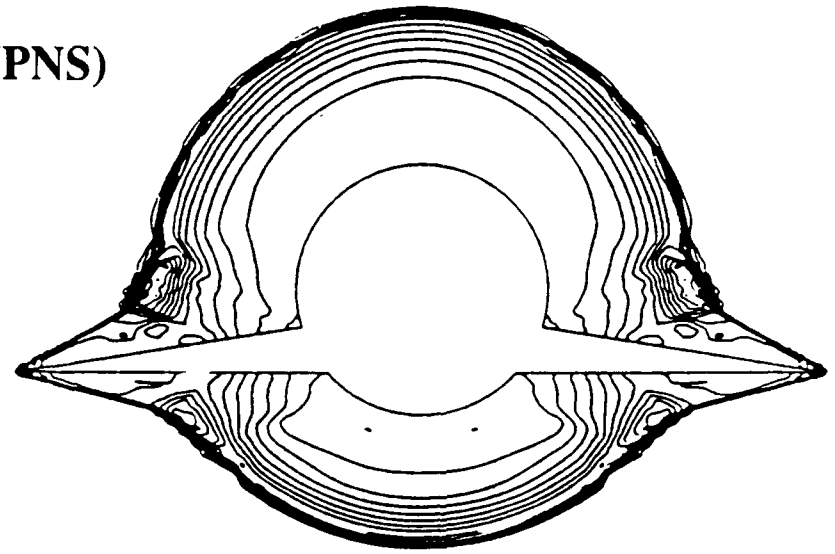

FIGURE 10. COMPARISON OF COMPUTED PRESSURE CONTOURS FOR EQUILIBRIUM AIR AT MACH 24.5, AN INCIDENCE OF 1° AND Z = 108.67 FT FOR ZEUS AND THE PNS SOLUTIONS OF KORTE[17]

REFERENCES

1. Wardlaw, A. B. Jr. and Davis, S. F., ***A Second Order Godunov Method for Supersonic Tactical Missiles***, NSWC TR 86-506, Dec 1986.
2. Wardlaw, A. B. Jr., Priolo, F. J. and Baltakis, F., "ZEUS User Manual," NSWC, private communications.
3. Priolo, F. J. and Wardlaw, A. B. Jr., "A Comparison of Inviscid Computational Methods for Supersonic Tactical Missiles," AIAA Paper 87–0113, Jan 1987.
4. Priolo, F. J. and Wardlaw, A. B. Jr., "Supersonic Non-Circular Missile Computations," ***Journal of Spacecraft and Rockets***, May-Jun 1989, pp. 151–157 (also AIAA Paper 88-0278, Jan 1988).
5. Evans, J. and Wardlaw, A. B. Jr., "Prediction of Tubular Aerodynamics Using the ZEUS Euler Code," ***Journal of Spacecraft and Rockets***, Sep-Oct. 1989, pp. 314–321.
6. Priolo, F. J. and Wardlaw, A. B. Jr., "Induced Roll Computations for Conventional Missile," ***Journal of Spacecraft and Rockets***, Sep-Oct 1990, pp. 486–492 (also AIAA Paper 89-0331, Jan 1989).
7. Priolo, F. J. and Wardlaw, A. B. Jr., "Euler Space-Marching Computations With Crossflow Separation for Missile-Type Bodies," AIAA Paper 90-0616, Jan 1990.
8. Priolo, F. J. and Wardlaw, A. B. Jr., "Supersonic Tactical Missile Computations Using Euler's Equations with Crossflow Separation Modeling," AGARD-CP-493, Apr 1990, pp. 6.1–6.11.
9. Jones D., Evans J., Priolo F., Sturek W. and Wardlaw A., "Application of Euler and Navier-Stokes Codes to Missile Type Bodies With High L/D Ratios," AGARD-CP-493, Apr 1990, pp. 8.1–8.15.
10. Srinivasan, S., Tannehill, J. C., ? ' Weilmuenster, K. J., ***Simplified Curve Fits for the Thermodynamic Properties of Equilibrium Air***, Report ISU-ERI-Ames- 86401, Engineering Research Institute, Iowa State University, Ames, Iowa, Jun 1986.
11. Anderson, J. D. Jr., ***Hypersonic and High Temperature Gas Dynamics***, McGraw-Hill Book Co., 1989, pp. 413–467.
12. Hilsenrath, J. and Klein, M., ***Tables of Thermodynamic Properties of Air in Chemical Equilibrium Including Second Virial Corrections from 1500 to 15,00K***, Arnold Engineering Development Center Report No. AEDC-TR-65–68, 1965.
13. Thomas, J. L., Walters, R. W., Reu T., Ghaffini, S., Weston R. P., and Duckering, J. M., "Patched Grid Algorithm for Complex Configurations Directed Toward F-18 Aircraft," AIAA Paper 89–0121, Jan 1989.
14. Solomon, J. M., Ciment, M., Ferguson, R. E., Bell, J. B., and Wardlaw, A. B., Jr., ***A Program for Computing Steady Inviscid Three-Dimensional Supersonic Flow on Reentry Vehicles - Vol. I: Analysis and Programming***, NSWC/WOL/TR 77–28, Feb 1977.
15. Hudgins, H. E., ***Supersonic Flow About Right Circular Cones at Zero Yaw in Air at Chemical Equilibrium. Part I. Correlation of Flow Properties***, TM 1493, Picatinny Arsenal, Dover, New

Jersey, Aug 1965.

16. Palmer, G., "In Implicit Flux-Split Algorithm to Calculate Hypersonic Flowfields In Chemical Equilibrium," AIAA Paper No. 87-1580, Jun 1987.
17. Korte, J. J. and McRae, D. S., "Numerical Simulation of Flow Over a Hypersonic Aircraft Using An Explicit Upwind PNS Solver," AIAA Paper 89–1829, Jun 1989.

APPENDIX A

ZEUS INPUT FILE

The following file describes the required input for ZEUS. To execute ZEUS, replace the () symbols in the value column with the desired variable value. Add information supporting specific options between the lines containing the >>>>> and <<<<< symbols. Variables enclosed by [] should be placed by themselves on a line. Do not eliminate any lines from this file.

```
                          ------------------
VALUE  VARIABLE          DESCRIPTION
-------------------------------------------------------------------------------
              *****INTEGRATION CONTROL*****
()      ZETAEND Terminate calculation if ZETA > ZETAEND.
()      KEND    Terminate calculation if STEP NUMBER > KEND.
()      FCFL    Step size safety factor (1. > FCFL > 0.) Typically use .9 .
()      XKI     Interior point limiting constant (2. > XKI > 0.) Typically use 1.
()      IAPR    0,1 for approximate or complete Riemann Problem. Typically use 0.
                Must use 0 for equilibrium air.
()      ISHFLUX 0,1 for using complete Riemann Problem or freestream properties
                to compute the flux at the cell edge next to the bow shock.
                Typically use 0.
()      ISHANG  0,1 for using complete Riemann Problem or Roe averaged variables
                to compute shock angle. Typically use 0. For equilibrium air, a
                value of 1 is preferred.
-------------------------------------------------------------------------------
              *****BOUNDARY CONDITIONS*****
()      NXKE    Number of edges at which default limiter setting won't be used.
                Default settings are 2 on edges 1 or 3 and 0 on edges 2 or 4.
                For each edge at which the default limiter is non-standard, add
                a line containing the following information:
                zone number (KEZ), edge number (KEE) and limiter value (XKE)
                   >>>>>start list of [KEZ,KEE,XKE]
                   <<<<<end list
()      NSUR    Number of edges not featuring default surface types.  Default
                values are 1 on edges 1 and 3 and 0 on edge 2 and 4.  Program
                will automatically account a fitted shock on edge 3 or fin
                surfaces on edges 2 or 4. For each edge at which the surface
                type is not of default, add a line that specifies the zone
                number(KSURZ), edge number(KSURE) and surface type (KSUR).
                   >>>>>start list of [KSURZ,KSURE,KSUR]
                   <<<<<end list
()      DFAC    In case of a local wall Mach number which is to small to allow
                the flow to be turned parallel to the wall, the turn angle is
                multiplied by the constant DFAC ( 1. > DFAC > 0.).
-------------------------------------------------------------------------------
              *****OUTPUT CONTROL*****
```

```
                ---Printer---
()      IPRINT  Print crossflow plane if step number is evenly divided by IPRINT
()      NSKIP   Print n planes which are evenly divisible by NSKIP
()      MSKIP   Print m planes which are evenly divisible by MSKIP
()      ISKIP   Print step size if step number is evenly divided by ISKIP
.
                ---PLOTZA/Force-Pressure Summary---
()      JSPPR   In default mode, only edge 1 of each zone will be written to
                PLOTZA.  JSPPR is the number of additional edges which are not
                to be written in the default manner.  For each edge added or
                deleted from this print list,include a line which specifies
                zone number (JSPZ), edge number (JSPE) and print code (JSP).
                JSP =  1 will write this zone edge to PLOTZA, 0 will not.
                   >>>>>start list of [JSPZ,JSPE,JSP]
                   <<<<<end list
()      JSPDIS  1 - print grid point locations for the edges specified by JSPPR.
                0 - do not print.
()      KSKIP   Write surface properties on selected edges to PLOTZA if
                if STEP NUMBER is evenly divisible by KSKIP
()      NPRT    On summary sheet, print surface pressures of edges 2 or 4 if
                n < NPRT.
()      DELZA   Write to PLOTZA if (ZETA - ZETA at last write) > DELZA
.
                ---PLOTZC (Plot file)
()      IPLOT   Write to PLOTZC if STEP NUMBER is evenly divisible by IPLOT.
()      DELZC   Write to PLOTZC if (ZETA - ZETA at last write) > DELZC
()      IPLOTN  Number of target Z stations (ZTARGET) at which PLOTZC will
                be written.  If IPLOTN > 0,  Include a list of these
                stations on the next line (maximum of 20). Stations must be
                listed in ascending order.
                   >>>>>start ZTARGET list
                   <<<<<end list
-----------------------------------------------------------------------------
            *****AERODYNAMIC DATA*****
()      AREF    Reference area used in calculating force and moment coefficients.
()      XLREF   Reference length used in calculating moment coefficients and
                center-of-pressure.
()      IEFORCE 0, 1 don't, do print force and moments for individual edges.
-----------------------------------------------------------------------------
            *****SEPARATION MODELING*****
()      IVIS    0,1,2 for no modeling, clipping, and forced separation. Clipping
                and forced separation can only be used in conjunction with
                cylindrical coordinates. If IVIS = 2, specify the number of
                separation lines (NSEP).
                 >>>>> NSEP
                 <<<<<
                For each separation line specify:
                ISSIDE - 0 separation line located between 0 and 180 degrees,
                         1 separation line located between 180 and 360 degrees.
                ISEP - number of points used to define the separation line.
                ZSSEP - Zeta value at which separation is started
                ZESEP - Zeta value at which separation is terminated
                PHICD - separation angle phiC (degrees)
                PHIAD - separation angle phiA (degrees)
                BETACD - sparation andgle BetaC (degrees)
                BETAAD - separation angle BetaA (degrees)
                 >>>>> [ISSIDE,ISEP,ZSSEP,ZESEP,PHICD,PHIAD,BETACD,BETAAD]
                 <<<<<
```

```
                A list of ISEP pairs of points (ZEPZ,ZEPP) describing the zeta
                and phi coordinates of the separation line.  This list should
                start at the most forward section and move aft. Start the list
                for each separation line on a separate line and list in same
                order as used in the above data.
                  >>>>> start list of ZEPZ,ZEPP
                  <<<<<
-----------------------------------------------------------------------------
            *****GAS TYPE*****
()      IGAS    0-perfect gas; 1-equilibrium air
-----------------------------------------------------------------------------
            *****UNITS *****
()      IUNITS  0-english  (p=lbf/ft**2, rho=slug/ft**3, t=rankine, xyz=ft);
                1-metric   (p=n/m**2,    rho=kg/m**3,    t=kelvin,  xyz=m).
                All input units must be consistant.  Output units are the same.
-----------------------------------------------------------------------------
            *****INITIAL DATA*****
()      IMOD    0,1 for new start or restart respectively. For a restart, the
                initial flow field is read from TAPE3.  Additional information
                is not needed and the remaining entries in this section should
                be disregarded.  A new start assumes a uniform flow field which
                is described in the following section.
.
                  ---Mesh Size---
()      IZN     Number of zones.
()      NA      Number of cells in xi direction (i.e., between edges 1 and 3)
()      MA      Number of cells in eta direction (i.e., between edge 4 of zone 1
                and edge2 of zone IZN)
.
                List the number of M planes in each zone, starting from zone 1
                and ending at zone MA.
                      >>>>>Start list of MA for each zone
                      <<<<<end list
.
                  ---Flow Properties---
()      ZETA    Zeta coordinate of initial data plane
()      ALPHA   Angle of attack (degrees)
()      BETA    Angle of yaw (degrees)
()      XMINF   Mach number
()      PINF    Pressure
()      DINF    Density
.
                  ---Problem Definition---
                  PROBLEM DEFINITION
()      ICORD   0,1,2 for cartesian, cylindrical or elliptic coordinates
()      IASYM   0 - no pitch plane symmetry; 1 - pitch plane symmetry.
()      ISHOCK  Set to 1 if edge 3 is to be fitted by the calculation
                (either as a shock or sonic line); otherwise set to 0.
                ISHOCK = 1 is only valid for ICORD =1 or 2. If edge 3
                is to be fitted, the r and phi (cylindrical coordinates)
                or s, tau (elliptic coordinates) of the shock location on each
                M plane, (SS, SSZ) must be defined, starting from M = 1,
                etc,.
                      >>>>>Start list of [SS,SSZ]
                      >>>>>End list
-----------------------------------------------------------------------------
*****MESH DEFINITION*****
()      IMESHF  0 for uniform mesh in xi direction.  1 for clustered mesh.  If
```

a clustered mesh is to be used, the clustering function (FN) in the xi direction at the NA cell centers must be defined starting at cell 1, located adjacent to edge 1 and moving to edge 3 (usually body to shock).

```
>>>>>start list of FN
>>>>>end list
```

() IMESHG 0 for uniform mesh in eta direction. 1 for clustered mesh. If a clustered mesh is to be used, the clustering function (GN) in the eta direction at the MA(i) cell centers in each zone must be defined, starting with zone 1 and ending with zone IZN. Start with cell 1, located adjacent to edge 4,and end at the cell adjacent to edge 2. The list for each zone should be started on a new card

```
>>>>>>>>start list GN
        end list<<<<<<<
```

APPENDIX B

SAMPLE CASE OUTPUT

B.1 HYPERSONIC SHARP CONE

B.1.1 ZEUS Output — II

```
1                 P R O G R A M   Z E U S


                 **** INTEGRATION CONTROL ****
                 ICORD   =          1              (0-CARTESIAN, 1-CYLINDRICAL COORDINATES)
                 ZETA    =        0.10000          (INITIAL ZETA)
                 ZETAEND =       50.00000          (MAXIMUM ZETA)
                 KSTART  =          0              (INITIAL STEP NUMBER)
                 KEND    =       5000              (MAXIMUM STEP NUMBER)
                 FCFL    =        0.90000          (CFL SAFETY FACTOR)
                 XKI     =       1.000000          (INTERIOR POINT LIMITER)
                 IAPR    =          0              (0-APPROXIMATE RIEMANN PROBLEM
                                                    1-COMPLETE RIEMANN PROBLEM)
                 ISHFLUX =          0              (FLUX AT SHOCK- 0-RIEMANN PROBLEM
                                                                   1-FREESTREAM PROPERTIES)
                 ISHANG  =          1              (SHOCK ANGLE  - 0-RIEMANN PROBLEM
                                                                   1-ROE AVERAGED VARIABLES)


                 **** BOUNDARY CONDITIONS ****
                 NXKE    =   0        (NUMBER OF EDGES WITH NON-DEFAULT LIMITER SETTINGS)
                 NSUR    =   0        (NUMBER OF EDGES WITH NON-DEFAULT SURFACE TYPE)
                 DFAC    =    0.9000  (REDUCE TURNS WHICH ARE TOO LARGE BY DFAC)
                 ISHOCK  =   1        (1-SHOCK, 0-NO SHOCK ON EDGE 3)
                 IASYM   =   1        (0-NO SYMMETRY,1-PITCH PLANE SYMMETRY)


                 SURFACE POINT LIMITER
                    ZONE      EDGE 1     EDGE 2     EDGE 3     EDGE 4
                     1      2.000      0.000      0.000      0.000


                 SURFACE TYPE
                    ZONE      EDGE 1     EDGE 2     EDGE 3     EDGE 4
                     1          1          0          1          0


                 **** OUTPUT CONTROL ****

                     PRINTER (file 6)
                 IPRINT  =   250      (PRINT FLOW FIELD IF STEP NUMBER IS EVENLY DIVISIBLE BY IPRINT)
                 ISKIP   =    10      (PRINT STEP SIZE IF STEP NUMBER IS EVENLY DIVISIBLE BY ISKIP)
                 NSKIP   =     3      (PRINT N PLANES WHICH ARE EVENLY DIVISIBLE BY NSKIP)
                 MSKIP   =     6      (PRINT M PLANES WHICH ARE EVENLY DIVISIBLE BY MSKIP)
```

```
PRESSURE SUMMARY (PLOTZA)
KSKIP   =    50     (PRINT SURFACE PRESSURE IF STEP NUMBER IS EVENLY DIVISIBLE BY KSKIP)
NPRT    =   100     (DON'T PRINT POINTS IF N>NPRT)
DELZA   = 10000.000 (PRINT SURFACE PRESSURE EVERY ZETA = DELZA)
JSPPR   =     0     (NUMBER OF NON-DEFAULT EDGES)
JSPDIS  =     0     (PRINT SURFACE GRID POINT LOCATIONS)
SURFACE PRESSURE OUTPUT CONTROL: 0-DON'T PRINT,1-PRINT.
   ZONE     EDGE 1    EDGE 2    EDGE 3    EDGE 4
    1         1         0         0         0


PLOT FILE (PLOTZC)
IPLOT   = 10000     WRITE TO PLOTZC IF STEP NUMBER IS EVENLY DIVISIBLE BY IPLOT
DELZC   = 10000.000 (WRITE PLOT TAPE EVERY ZETA = DELZC),
IPLOTN  =     0     NUMBER OF TARGET PLOT STATIONS



*****AERODYNAMICS DATA*****
AREF    =    1.0000 (REFERENCE AREA)
ALREF   =    1.0000 (REFERENCE LENGTH)
IEFORCE =     0     (0 - DONT;1 - DO PRINT EDGE LOADS)



*****SEPARATION MODELING*****
IVIS    =     0     (0 - INVISCID, 1 - CLIPPING, 2 - FORCED SEPARATION)



*****GAS TYPE*****
IGAS    =     1     (0-PERFECT, 1-EQUILIBRIUM AIR)



******UNITS******
IUNITS  =     1     (0-ENGLISH, 1-METRIC)



0        **** INITIAL DATA PLANE ****
IMOD    =     0      (0 SELF START;1 FROM TAPE START)
MACH    =    20.0000(FREE-STREAM MACH NUMBER)
ALPHA   =    20.0000(ANGLE OF ATTACK)
BETA    =     0.0000(YAW ANGLE)
PINF    =  1185.5000(FREE-STREAM PRESSURE)
DINF    =  1.7861E-02(FREE-STREAM DENSITY)
HO      =  1.7269E+12(STAGNATION ENTHALPY)
SINF    =     0.0000(FREE-STREAM ENTROPY)
IZN     =     1      (NUMBER OF ZONES)
NA      =    18      (CELLS BETWEEN EDGES 1 AND 3)
MA      =    36      (TOTAL CELLS BETWEEN EDGES 2 AND 4)
  MA/ZONE:   36
IMESHF  =     0     (0-UNIFORM MESH,1-CLUSTERED MESH
                    BETWEEN EDGES 1 AND 3)
IMESHG  =     0     (0-UNIFORM,1-CLUSTERED MESH
                    BETWEEN EDGES 2 AND 4)


1        STEP =     0     ZETA =   1.0000000E-01     DZETA =   0.0000000E+00
         MACH NO. =   2.0000000E+01     ALPHA =   2.0000000E+01     BETA =   0.0000000E+00
0
0          ZONE NO.     1

  CELL PLANE  M =     1
  C =   3.0000001E-01  CZ =  -3.1076.36E-01  CT =   0.0000000E+00   VX =   9.99048233E-01  4.36193906E-02  0.00000000E+00 ISUR  3
  B =   4.6630766E-02  BZ =   4.6630764E-01  BT =   0.0000000E+00   VX =   0.00000000E+00  0.00000000E+00  0.00000000E+00 ISUR  1

  N          S          T          P          D          U          V          W          E          M
 18.5  2.929620E-01  4.363323E-02  1.185500E+03  1.786100E-02  2.079097E+03 -9.077533E+01  5.717713E+03  7.887008E+03  2.027047E+01
 16.5  2.648098E-01  4.363323E-02  1.185500E+03  1.786100E-02  2.079097E+03 -9.077533E+01  5.717713E+03  7.887008E+03  2.027047E+01
 13.5  2.225816E-01  4.363323E-02  1.185500E+03  1.786100E-02  2.079097E+03 -9.077533E+01  5.717713E+03  7.887008E+03  2.027047E+01
 10.5  1.803534E-01  4.363323E-02  1.185500E+03  1.786100E-02  2.079097E+03 -9.077533E+01  5.717713E+03  7.887008E+03  2.027047E+01
  7.5  1.381252E-01  4.363323E-02  1.185500E+03  1.786100E-02  2.079097E+03 -9.077533E+01  5.717713E+03  7.887008E+03  2.027047E+01
  4.5  9.589700E-02  4.363323E-02  1.185500E+03  1.786100E-02  2.079097E+03 -9.077533E+01  5.717713E+03  7.887008E+03  2.027047E+01
  1.5  5.366880E-02  4.363323E-02  1.185500E+03  1.786100E-02  2.079097E+03 -9.077533E+01  5.717713E+03  7.887008E+03  2.027047E+01
```

```
CELL PLANE  M =    12
C =   3.0000001E-01  CZ =  -3.1076136E-01  CT =   0.0000000E+00   VX =   5.37299573E-01  8.43391478E-01  0.00000000E+00 ISUR  3
B =   4.6630766E-02  BZ =   4.6630764E-01  BT =   0.0000000E+00   VX =   0.00000000E+00  0.00000000E+00  0.00000000E+00 ISUR  1

N            S            T            P            D            U            V            W            E            M
18.5  2.929620E-01  1.003564E+00  1.185500E+03  1.786100E-02  1.118162E+03 -1.755163E+03  5.717713E+03  7.887008E+03  2.027047E+01
16.5  2.648098E-01  1.003564E+00  1.185500E+03  1.786100E-02  1.118162E+03 -1.755163E+03  5.717713E+03  7.887008E+03  2.027047E+01
13.5  2.225816E-01  1.003564E+00  1.185500E+03  1.786100E-02  1.118162E+03 -1.755163E+03  5.717713E+03  7.887008E+03  2.027047E+01
10.5  1.803534E-01  1.003564E+00  1.185500E+03  1.786100E-02  1.118162E+03 -1.755163E+03  5.717713E+03  7.887008E+03  2.027047E+01
 7.5  1.381252E-01  1.003564E+00  1.185500E+03  1.786100E-02  1.118162E+03 -1.755163E+03  5.717713E+03  7.887008E+03  2.027047E+01
 4.5  9.589700E-02  1.003564E+00  1.185500E+03  1.786100E-02  1.118162E+03 -1.755163E+03  5.717713E+03  7.887008E+03  2.027047E+01
 1.5  5.366880E-02  1.003564E+00  1.185500E+03  1.786100E-02  1.118162E+03 -1.755163E+03  5.717713E+03  7.887008E+03  2.027047E+01

CELL PLANE  M =    24
C =   3.0000001E-01  CZ =  -3.1076136E-01  CT =   0.0000000E+00   VX =  -4.61748660E-01  8.87010813E-01  0.00000000E+00 ISUR  3
B =   4.6630766E-02  BZ =   4.6630764E-01  BT =   0.0000000E+00   VX =   0.00000000E+00  0.00000000E+00  0.00000000E+00 ISUR  1

N            S            T            P            D            U            V            W            E            M
18.5  2.929620E-01  2.050762E+00  1.185500E+03  1.786100E-02 -9.609347E+02 -1.845938E+03  5.717713E+03  7.887008E+03  2.027047E+01
16.5  2.648098E-01  2.050762E+00  1.185500E+03  1.786100E-02 -9.609347E+02 -1.845938E+03  5.717713E+03  7.887008E+03  2.027047E+01
13.5  2.225816E-01  2.050762E+00  1.185500E+03  1.786100E-02 -9.609347E+02 -1.845938E+03  5.717713E+03  7.887008E+03  2.027047E+01
10.5  1.803534E-01  2.050762E+00  1.185500E+03  1.786100E-02 -9.609347E+02 -1.845938E+03  5.717713E+03  7.887008E+03  2.027047E+01
 7.5  1.381252E-01  2.050762E+00  1.185500E+03  1.786100E-02 -9.609347E+02 -1.845938E+03  5.717713E+03  7.887008E+03  2.027047E+01
 4.5  9.589700E-02  2.050762E+00  1.185500E+03  1.786100E-02 -9.609347E+02 -1.845938E+03  5.717713E+03  7.887008E+03  2.027047E+01
 1.5  5.366880E-02  2.050762E+00  1.185500E+03  1.786100E-02 -9.609347E+02 -1.845938E+03  5.717713E+03  7.887008E+03  2.027047E+01

CELL PLANE  M =    36
C =   3.0000001E-01  CZ =  -3.1076136E-01  CT =   0.0000000E+00   VX =  -9.99048233E-01  4.36192900E-02  0.00000000E+00 ISUR  3
B =   4.6630766E-02  BZ =   4.6630764E-01  BT =   0.0000000E+00   VX =   0.00000000E+00  0.00000000E+00  0.00000000E+00 ISUR  1

N            S            T            P            D            U            V            W            E            M
18.5  2.929620E-01  3.097960E+00  1.185500E+03  1.786100E-02 -2.079097E+03 -9.077512E+01  5.717713E+03  7.887008E+03  2.027047E+01
16.5  2.648098E-01  3.097960E+00  1.185500E+03  1.786100E-02 -2.079097E+03 -9.077512E+01  5.717713E+03  7.887008E+03  2.027047E+01
13.5  2.225816E-01  3.097960E+00  1.185500E+03  1.786100E-02 -2.079097E+03 -9.077512E+01  5.717713E+03  7.887008E+03  2.027047E+01
10.5  1.803534E-01  3.097960E+00  1.185500E+03  1.786100E-02 -2.079097E+03 -9.077512E+01  5.717713E+03  7.887008E+03  2.027047E+01
 7.5  1.381252E-01  3.097960E+00  1.185500E+03  1.786100E-02 -2.079097E+03 -9.077512E+01  5.717713E+03  7.887008E+03  2.027047E+01
 4.5  9.589700E-02  3.097960E+00  1.185500E+03  1.786100E-02 -2.079097E+03 -9.077512E+01  5.717713E+03  7.887008E+03  2.027047E+01
 1.5  5.366880E-02  3.097960E+00  1.185500E+03  1.786100E-02 -2.079097E+03 -9.077512E+01  5.717713E+03  7.887008E+03  2.027047E+01
0STEP =    10  ZETA =   1.66340232E-01  DZETA =   7.32434215E-03  NCFL,MCFL =    1   27
0STEP =    20  ZETA =   2.46382982E-01  DZETA =   7.83461425E-03  NCFL,MCFL =    2   32
0STEP =    30  ZETA =   3.14146966E-01  DZETA =   5.60534699E-03  NCFL,MCFL =    3   34
0STEP =    40  ZETA =   3.61406982E-01  DZETA =   3.79312504E-03  NCFL,MCFL =    5   34
0STEP =    50  ZETA =   3.89135122E-01  DZETA =   1.99062913E-03  NCFL,MCFL =    9   36
0STEP =    60  ZETA =   4.02772427E-01  DZETA =   1.00138236E-03  NCFL,MCFL =   16   36
0STEP =    70  ZETA =   4.14162219E-01  DZETA =   1.27577584E-03  NCFL,MCFL =   14   30
0STEP =    80  ZETA =   4.27247405E-01  DZETA =   1.31077075E-03  NCFL,MCFL =   15   28
0STEP =    90  ZETA =   4.42338258E-01  DZETA =   1.54344493E-03  NCFL,MCFL =   15   26
0STEP =   100  ZETA =   4.59667981E-01  DZETA =   1.76806981E-03  NCFL,MCFL =    5   35
0STEP =   500  ZETA =   2.12085581E+00  DZETA =   7.79856928E-03  NCFL,MCFL =    1   35
0STEP =   510  ZETA =   2.20042610E+00  DZETA =   8.08693748E-03  NCFL,MCFL =    1   35
0STEP =   520  ZETA =   2.28293014E+00  DZETA =   8.38514324E-03  NCFL,MCFL =    1   35
0STEP =   530  ZETA =   2.36848688E+00  DZETA =   8.69592931E-03  NCFL,MCFL =    1   35
0STEP =   540  ZETA =   2.45721507E+00  DZETA =   9.02224984E-03  NCFL,MCFL =    1   35
0STEP =   550  ZETA =   2.54922724E+00  DZETA =   9.35304537E-03  NCFL,MCFL =    1   35
0STEP =  1000  ZETA =   1.32442169E+01  DZETA =   4.83423956E-02  NCFL,MCFL =    1   35
0STEP =  1010  ZETA =   1.37375603E+01  DZETA =   5.01389466E-02  NCFL,MCFL =    1   35
0STEP =  1020  ZETA =   1.42492847E+01  DZETA =   5.20309620E-02  NCFL,MCFL =    1   35
0STEP =  1030  ZETA =   1.47800245E+01  DZETA =   5.39502650E-02  NCFL,MCFL =    1   35
0STEP =  1040  ZETA =   1.53305435E+01  DZETA =   5.59661500E-02  NCFL,MCFL =    1   35
0STEP =  1050  ZETA =   1.59015741E+01  DZETA =   5.80477230E-02  NCFL,MCFL =    1   35
0STEP =  1300  ZETA =   3.96720963E+01  DZETA =   1.44775480E-01  NCFL,MCFL =    1   35
0STEP =  1310  ZETA =   4.11496048E+01  DZETA =   1.50181472E-01  NCFL,MCFL =    1   35
0STEP =  1320  ZETA =   4.26822090E+01  DZETA =   1.55758888E-01  NCFL,MCFL =    1   35
0STEP =  1330  ZETA =   4.42718430E+01  DZETA =   1.61552802E-01  NCFL,MCFL =    1   35
0STEP =  1340  ZETA =   4.59206314E+01  DZETA =   1.67567953E-01  NCFL,MCFL =    1   35
0STEP =  1350  ZETA =   4.76309128E+01  DZETA =   1.73890367E-01  NCFL,MCFL =    1   35
0STEP =  1360  ZETA =   4.94047623E+01  DZETA =   1.80341914E-01  NCFL,MCFL =    1   35
1                    STEP =  1364     ZETA =   5.0000000E+01     DZETA =   5.0300598E-02
                   MACH NO. =   2.0000000E+01     ALPHA =   2.0000000E+01     BETA =   0.0000000E+00
0
0                    ZONE NO.     1
0
LEFT EDGE PLANE GEOMETRY
N            X            Y            SG           SG2          SGS          VE1          VE2          VE3          ISUR
18.5  2.536409E+01  0.000000E+00  0.000000E+00  0.000000E+00  0.000000E+00  0.000000E+00  5.885727E-03  0.000000E+00   0
16.5  2.512995E+01  0.000000E+00  0.000000E+00  0.000000E+00  0.000000E+00  0.000000E+00  5.885727E-03  0.000000E+00   0
13.5  2.477875E+01  0.000000E+00  0.000000E+00  0.000000E+00  0.000000E+00  0.000000E+00  5.885679E-03  0.000000E+00   0
10.5  2.442754E+01  0.000000E+00  0.000000E+00  0.000000E+00  0.000000E+00  0.000000E+00  5.885727E-03  0.000000E+00   0
 7.5  2.407633E+01  0.000000E+00  0.000000E+00  0.000000E+00  0.000000E+00  0.000000E+00  5.885727E-03  0.000000E+00   0
 4.5  2.372512E+01  0.000000E+00  0.000000E+00  0.000000E+00  0.000000E+00  0.000000E+00  5.885727E-03  0.000000E+00   0
 1.5  2.337392E+01  0.000000E+00  0.000000E+00  0.000000E+00  0.000000E+00  0.000000E+00  5.885727E-03  0.000000E+00   0
0
0   LEFT EDGE PLANE  CEF =  2.5422626E+01  BEF =  2.3315382E+01
N            S            T            P            D            U            V            W            E            M
18.5  2.536409E+01  0.000000E+00  7.529634E+03  5.602545E-02  2.518240E+03  0.000000E+00  5.495166E+03  8.065181E+03  1.402778E+01
16.5  2.512995E+01  0.000000E+00  7.736206E+03  5.708840E-02  2.522448E+03  0.000000E+00  5.492869E+03  8.065892E+03  1.397147E+01
13.5  2.477875E+01  0.000000E+00  7.635601E+03  5.796134E-02  2.517731E+03  0.000000E+00  5.497313E+03  8.040668E+03  1.417292E+01
10.5  2.442754E+01  0.000000E+00  7.555978E+03  5.702781E-02  2.502159E+03  0.000000E+00  5.501538E+03  8.049583E+03  1.422739E+01
 7.5  2.407633E+01  0.000000E+00  7.490213E+03  5.923714E-02  2.506906E+03  0.000000E+00  5.510096E+03  8.004216E+03  1.448658E+01
 4.5  2.372512E+01  0.000000E+00  7.489551E+03  5.776165E-02  2.522607E+03  0.000000E+00  5.517053E+03  8.029995E+03  1.433513E+01
 1.5  2.337392E+01  0.000000E+00  7.561136E+03  5.035129E-02  2.551719E+03  0.000000E+00  5.518031E+03  8.095816E+03  1.389353E+01
```

```
CELL PLANE  M =     1
C =   2.5422626E+01  CZ =   5.0808942E-01  CT =   3.2884135E+00   VX =   1.12653807E-01 -9.50830709E-03 -5.72629124E-02 ISUR  3
B =   2.3315382E+01  BZ =   4.6630764E-01  BT =   0.0000000E+00   VX =   1.02162898E-01  4.46052663E-03 -4.76371348E-02 ISUR  1

 N            S            T            P            D            U            V            W            E            M
19.0  2.542263E+01  4.363323E-02  1.185500E+03  1.786100E-02  2.079097E+03 -9.077533E+01  5.717713E+03  7.887008E+03  2.027047E+01
18.5  2.536409E+01  4.363323E-02  7.529713E+03  5.602494E-02  2.515650E+03 -1.439398E+02  5.495166E+03  8.065197E+03  1.402926E+01
16.5  2.512995E+01  4.363323E-02  7.736723E+03  5.708947E-02  2.520995E+03 -1.409128E+02  5.492065E+03  8.065921E+03  1.397012E+01
13.5  2.477875E+01  4.363323E-02  7.636763E+03  5.638063E-02  2.514873E+03 -1.327365E+02  5.495119E+03  8.069142E+03  1.397467E+01
10.5  2.442754E+01  4.363323E-02  7.556172E+03  5.534533E-02  2.509848E+03 -1.236716E+02  5.496924E+03  8.080334E+03  1.391816E+01
 7.5  2.407633E+01  4.363323E-02  7.490260E+03  5.475292E-02  2.510205E+03 -1.111874E+02  5.496849E+03  8.084900E+03  1.390301E+01
 4.5  2.372512E+01  4.363323E-02  7.480650E+03  5.335860E-02  2.521093E+03 -8.984129E+01  5.490033E+03  7.988110E+03  1.457410E+01
 1.5  2.337392E+01  4.363323E-02  7.515809E+03  4.711765E-02  2.540626E+03 -7.808256E+01  5.468434E+03  8.192176E+03  1.316598E+01
 1.0  2.331538E+01  4.363323E-02  7.524885E+03  4.558864E-02  2.544866E+03 -7.793466E+01  5.462936E+03  8.243973E+03  1.283707E+01

CELL PLANE  M =    12
C =   2.7497099E+01  CZ =   5.4949588E-01  CT =  -1.8066899E+00   VX =   5.81143498E-02  1.05959825E-01 -6.62183762E-02 ISUR  3
B =   2.3315382E+01  BZ =   4.6630764E-01  BT =   0.0000000E+00   VX =   5.49443252E-02  8.62453654E-02 -4.76394892E-02 ISUR  1

 N            S            T            P            D            U            V            W            E            M
19.0  2.749710E+01  1.003564E+00  1.185500E+03  1.786100E-02  1.118162E+03 -1.755163E+03  5.717713E+03  7.887008E+03  2.027047E+01
18.5  2.738094E+01  1.003564E+00  5.095232E+04  9.814434E-02  2.461871E+03 -1.620774E+03  4.976275E+03  9.182064E+03  6.841063E+00
16.5  2.691631E+01  1.003564E+00  4.870170E+04  9.022895E-02  2.450539E+03 -1.571799E+03  4.979076E+03  9.239487E+03  6.734838E+00
13.5  2.621935E+01  1.003564E+00  4.401868E+04  7.431101E-02  2.405281E+03 -1.468554E+03  4.984081E+03  9.378059E+03  6.485871E+00
10.5  2.552240E+01  1.003564E+00  4.066099E+04  6.220026E-02  2.362587E+03 -1.360251E+03  4.974688E+03  9.525863E+03  6.219797E+00
 7.5  2.482545E+01  1.003564E+00  3.830177E+04  5.270589E-02  2.318820E+03 -1.247093E+03  4.942063E+03  9.699641E+03  5.912765E+00
 4.5  2.412849E+01  1.003564E+00  3.661623E+04  4.465511E-02  2.263812E+03 -1.126602E+03  4.859703E+03  9.943349E+03  5.510729E+00
 1.5  2.343154E+01  1.003564E+00  3.557748E+04  3.702518E-02  2.177514E+03 -1.005357E+03  4.676496E+03  1.031587E+04  4.977870E+00
 1.0  2.331538E+01  1.003564E+00  3.540671E+04  3.575058E-02  2.159746E+03 -9.831878E+02  4.635984E+03  1.039148E+04  4.882626E+00

CELL PLANE  M =    24
C =   2.5741262E+01  CZ =   5.1437604E-01  CT =  -8.7557518E-01   VX =  -5.55456318E-02  9.83904079E-02 -5.80633879E-02 ISUR  3
B =   2.3315382E+01  BZ =   4.6630764E-01  BT =   0.0000000E+00   VX =  -4.72184531E-02  9.07058865E-02 -4.76386547E-02 ISUR  1

 N            S            T            P            D            U            V            W            E            M
19.0  2.574126E+01  2.050762E+00  1.185500E+03  1.786100E-02 -9.609347E+02 -1.845938E+03  5.717713E+03  7.887008E+03  2.027047E+01
18.5  2.567388E+01  2.050762E+00  1.781103E+05  1.476145E-01  1.738169E+03 -1.709724E+03  4.283757E+03  1.028196E+04  4.047510E+00
16.5  2.540434E+01  2.050762E+00  2.019468E+05  1.624689E-01  1.853336E+03 -1.633532E+03  4.191143E+03  1.031568E+04  3.925658E+00
13.5  2.500002E+01  2.050762E+00  1.974213E+05  1.557487E-01  1.855684E+03 -1.491412E+03  4.182808E+03  1.037886E+04  3.838576E+00
10.5  2.459571E+01  2.050762E+00  1.941177E+05  1.489927E-01  1.858733E+03 -1.333302E+03  4.157729E+03  1.045551E+04  3.729683E+00
 7.5  2.419139E+01  2.050762E+00  1.916110E+05  1.408848E-01  1.863031E+03 -1.158393E+03  4.118698E+03  1.054066E+04  3.608327E+00
 4.5  2.378708E+01  2.050762E+00  1.898341E+05  1.307118E-01  1.860083E+03 -9.694445E+02  4.059790E+03  1.063963E+04  3.467702E+00
 1.5  2.338277E+01  2.050762E+00  1.886289E+05  1.214036E-01  1.846912E+03 -7.718042E+02  3.974862E+03  1.075421E+04  3.305039E+00
 1.0  2.331538E+01  2.050762E+00  1.884866E+05  1.199857E-01  1.843947E+03 -7.381380E+02  3.958180E+03  1.077506E+04  3.276075E+00

CELL PLANE  M =    36
C =   2.5460409E+01  CZ =   5.0951618E-01  CT =   1.6851434E-02   VX =  -1.11555427E-01  4.94450005E-03 -5.68562150E-02 ISUR  3
B =   2.3315382E+01  BZ =   4.6630764E-01  BT =   0.0000000E+00   VX =  -1.02162883E-01  4.46052663E-03 -4.76371348E-02 ISUR  1

 N            S            T            P            D            U            V            W            E            M
19.0  2.546041E+01  3.097960E+00  1.185500E+03  1.786100E-02 -2.079097E+03 -9.077512E+01  5.717713E+03  7.887008E+03  2.027047E+01
18.5  2.540083E+01  3.097960E+00  2.826340E+05  1.583696E-01  1.354601E+03 -8.783905E+01  3.891533E+03  1.090033E+04  2.891081E+00
16.5  2.516249E+01  3.097960E+00  3.314338E+05  1.809442E-01  1.520436E+03 -8.345345E+01  3.752207E+03  1.090203E+04  2.806444E+00
13.5  2.480499E+01  3.097960E+00  3.339543E+05  1.820482E-01  1.559446E+03 -7.420601E+01  3.731489E+03  1.090281E+04  2.801837E+00
10.5  2.444748E+01  3.097960E+00  3.358455E+05  1.828575E-01  1.596512E+03 -6.469098E+01  3.712040E+03  1.090362E+04  2.797826E+00
 7.5  2.408998E+01  3.097960E+00  3.371473E+05  1.832652E-01  1.631025E+03 -5.556303E+01  3.691342E+03  1.090629E+04  2.791395E+00
 4.5  2.373247E+01  3.097960E+00  3.379689E+05  1.833719E-01  1.663145E+03 -4.636639E+01  3.670344E+03  1.091007E+04  2.785327E+00
 1.5  2.337497E+01  3.097960E+00  3.383808E+05  1.840850E-01  1.700140E+03 -3.665276E+01  3.663723E+03  1.090272E+04  2.795253E+00
 1.0  2.331538E+01  3.097960E+00  3.384338E+05  1.842610E-01  1.706701E+03 -3.497089E+01  3.663687E+03  1.090061E+04  2.797570E+00
0
0   RIGHT EDGE PLANE  CEF =   2.5460409E+01  BEF =   2.3315382E+01
 N            S            T            P            D            U            V            W            E            M
18.5  2.540083E+01  3.141593E+00  2.831531E+05  1.584500E-01  1.359465E+03 -1.188552E-04  3.889310E+03  1.090287E+04  2.888619E+00
16.5  2.516249E+01  3.141593E+00  3.320027E+05  1.810446E-01  1.525419E+03 -1.333642E-04  3.749913E+03  1.090430E+04  2.804468E+00
13.5  2.480499E+01  3.141593E+00  3.345346E+05  1.821877E-01  1.564752E+03 -1.368030E-04  3.729273E+03  1.090459E+04  2.799585E+00
10.5  2.444748E+01  3.141593E+00  3.363885E+05  1.830209E-01  1.601616E+03 -1.400259E-04  3.710251E+03  1.090482E+04  2.796546E+00
 7.5  2.408998E+01  3.141593E+00  3.376875E+05  1.834504E-01  1.635668E+03 -1.430030E-04  3.689932E+03  1.090714E+04  2.791149E+00
 4.5  2.373247E+01  3.141593E+00  3.384210E+05  1.835633E-01  1.667296E+03 -1.457682E-04  3.669750E+03  1.091027E+04  2.785576E+00
 1.5  2.337497E+01  3.141593E+00  3.388041E+05  1.842960E-01  1.703438E+03 -1.489280E-04  3.663629E+03  1.090246E+04  2.795472E+00
0
   RIGHT EDGE PLANE GEOMETRY
 N            X            Y            TH           THZ          THS          VE1          VE2          VE3          ISUR
18.5  2.540083E+01  3.141593E+00  3.141593E+00  0.000000E+00  0.000000E+00  5.237989E-10 -5.991213E-03 -9.936496E-15   0
16.5  2.516249E+01  3.141593E+00  3.141593E+00  0.000000E+00  0.000000E+00  5.237989E-10 -5.991166E-03 -1.720846E-15   0
13.5  2.480499E+01  3.141593E+00  3.141593E+00  0.000000E+00  0.000000E+00  5.237989E-10 -5.991213E-03  1.115774E-14   0
10.5  2.444748E+01  3.141593E+00  3.141593E+00  0.000000E+00  0.000000E+00  5.237989E-10 -5.991213E-03 -2.525757E-14   0
 7.5  2.408998E+01  3.141593E+00  3.141593E+00  0.000000E+00  0.000000E+00  5.237932E-10 -5.991166E-03 -4.662937E-15   0
 4.5  2.373247E+01  3.141593E+00  3.141593E+00  0.000000E+00  0.000000E+00  5.237989E-10 -5.991213E-03 -2.442491E-15   0
 1.5  2.337497E+01  3.141593E+00  3.141593E+00  0.000000E+00  0.000000E+00  5.237932E-10 -5.991166E-03  1.809664E-14   0
1    ZONE =  1    EDGE =  1    MACH NO. =  20.000    ANGLE OF ATTACK =   20.000    YAW ANGLE =    0.000
                                        S U R F A C E   P R E S S U R E S
OSTEP   ZETA        1            2            3            4            5            6            7            8            9           10
    1   0.104  8.366E+03S  8.703E+03S  9.399E+03S  1.050E+04S  1.206E+04S  1.417E+04S  1.692E+04S  2.040E+04S  2.473E+04S  3.001E+04S
  100   0.459  7.342E+03S  7.854E+03S  9.040E+03S  1.042E+04S  1.343E+04S  1.205E+04S  1.386E+04S  1.669E+04S  1.971E+04S  2.202E+04S
  200   0.683  1.075E+04S  9.332E+03S  7.550E+03S  7.318E+03S  9.424E+03S  1.082E+04S  1.277E+04S  1.530E+04S  1.822E+04S  2.227E+04S
  300   1.005  7.656E+03S  7.094E+03S  7.061E+03S  7.741E+03S  8.610E+03S  1.025E+04S  1.247E+04S  1.494E+04S  1.843E+04S  2.384E+04S
  400   1.463  8.009E+03S  7.186E+03S  6.967E+03S  7.554E+03S  8.802E+03S  1.091E+04S  1.382E+04S  1.701E+04S  1.994E+04S  2.418E+04S
  500   2.117  7.964E+03S  6.826E+03S  7.017E+03S  8.252E+03S  9.732E+03S  1.114E+04S  1.330E+04S  1.612E+04S  1.963E+04S  2.388E+04S
  600   3.057  8.278E+03S  7.099E+03S  7.498E+03S  8.132E+03S  9.089E+03S  1.093E+04S  1.321E+04S  1.608E+04S  1.949E+04S  2.395E+04S
  700   4.411  8.031E+03S  7.451E+03S  7.294E+03S  7.879E+03S  9.084E+03S  1.087E+04S  1.328E+04S  1.605E+04S  1.955E+04S  2.398E+04S
  800   6.361  7.666E+03S  7.419E+03S  7.213E+03S  7.896E+03S  9.167E+03S  1.084E+04S  1.320E+04S  1.611E+04S  1.955E+04S  2.398E+04S
```

900	9.170	7.683E+03S	7.350E+03S	7.172E+03S	7.985E+03S	9.099E+03S	1.090E+04S	1.328E+04S	1.611E+04S	1.957E+04S	2.401E+04S
1000	13.220	7.604E+03S	7.242E+03S	7.167E+03S	7.961E+03S	9.073E+03S	1.092E+04S	1.327E+04S	1.614E+04S	1.955E+04S	2.402E+04S
1100	19.057	7.577E+03S	7.244E+03S	7.167E+03S	7.963E+03S	9.092E+03S	1.090E+04S	1.329E+04S	1.613E+04S	1.957E+04S	2.401E+04S
1200	27.471	7.531E+03S	7.250E+03S	7.157E+03S	7.969E+03S	9.100E+03S	1.089E+04S	1.330E+04S	1.612E+04S	1.958E+04S	2.401E+04S
1300	39.600	7.539E+03S	7.239E+03S	7.155E+03S	7.979E+03S	9.098E+03S	1.090E+04S	1.330E+04S	1.612E+04S	1.959E+04S	2.400E+04S
1364	49.975	7.525E+03S	7.240E+03S	7.148E+03S	7.968E+03S	9.089E+03S	1.091E+04S	1.330E+04S	1.612E+04S	1.958E+04S	2.401E+04S

1 ZONE = 1 EDGE = 1 MACH NO. = 20.000 ANGLE OF ATTACK = 20.000 YAW ANGLE = 0.000

S U R F A C E P R E S S U R E S

0STEP	ZETA	11	12	13	14	15	16	17	18	19	20
1	0.104	3.635E+04S	4.382E+04S	5.250E+04S	6.245E+04S	7.362E+04S	8.598E+04S	9.933E+04S	1.137E+05S	1.292E+05S	1.455E+05S
100	0.459	2.470E+04S	3.255E+04S	3.952E+04S	4.697E+04S	5.498E+04S	6.231E+04S	7.014E+04S	8.043E+04S	9.274E+04S	1.074E+05S
200	0.683	2.730E+04S	3.317E+04S	4.000E+04S	4.735E+04S	5.626E+04S	6.942E+04S	8.630E+04S	9.739E+04S	1.089E+05S	1.229E+05S
300	1.005	3.071E+04S	3.694E+04S	4.320E+04S	5.100E+04S	5.971E+04S	6.968E+04S	8.109E+04S	9.362E+04S	1.072E+05S	1.219E+05S
400	1.463	2.919E+04S	3.529E+04S	4.239E+04S	5.053E+04S	5.976E+04S	6.994E+04S	8.118E+04S	9.353E+04S	1.070E+05S	1.222E+05S
500	2.117	2.911E+04S	3.525E+04S	4.248E+04S	5.070E+04S	5.986E+04S	6.995E+04S	8.111E+04S	9.354E+04S	1.073E+05S	1.224E+05S
600	3.057	2.912E+04S	3.533E+04S	4.255E+04S	5.075E+04S	5.984E+04S	6.992E+04S	8.116E+04S	9.363E+04S	1.073E+05S	1.223E+05S
700	4.411	2.917E+04S	3.536E+04S	4.257E+04S	5.073E+04S	5.985E+04S	6.995E+04S	8.123E+04S	9.364E+04S	1.073E+05S	1.222E+05S
800	6.361	2.917E+04S	3.537E+04S	4.258E+04S	5.074E+04S	5.988E+04S	6.997E+04S	8.122E+04S	9.365E+04S	1.073E+05S	1.222E+05S
900	9.170	2.921E+04S	3.537E+04S	4.259E+04S	5.075E+04S	5.988E+04S	6.996E+04S	8.123E+04S	9.366E+04S	1.073E+05S	1.221E+05S
1000	13.220	2.921E+04S	3.539E+04S	4.258E+04S	5.076E+04S	5.988E+04S	6.996E+04S	8.122E+04S	9.366E+04S	1.073E+05S	1.221E+05S
1100	19.057	2.920E+04S	3.540E+04S	4.259E+04S	5.077E+04S	5.987E+04S	6.997E+04S	8.120E+04S	9.368E+04S	1.073E+05S	1.222E+05S
1200	27.471	2.922E+04S	3.540E+04S	4.259E+04S	5.076E+04S	5.987E+04S	6.996E+04S	8.121E+04S	9.368E+04S	1.073E+05S	1.222E+05S
1300	39.600	2.922E+04S	3.540E+04S	4.258E+04S	5.076E+04S	5.987E+04S	6.996E+04S	8.120E+04S	9.367E+04S	1.073E+05S	1.222E+05S
1364	49.975	2.918E+04S	3.541E+04S	4.257E+04S	5.076E+04S	5.986E+04S	6.996E+04S	8.120E+04S	9.368E+04S	1.073E+05S	1.221E+05S

1 ZONE = 1 EDGE = 1 MACH NO. = 20.000 ANGLE OF ATTACK = 20.000 YAW ANGLE = 0.000

S U R F A C E P R E S S U R E S

0STEP	ZETA	21	22	23	24	25	26	27	28	29	30
1	0.104	1.628E+05S	1.807E+05S	1.990E+05S	2.175E+05S	2.358E+05S	2.547E+05S	2.737E+05S	2.914E+05S	3.078E+05S	3.228E+05S
100	0.459	1.245E+05S	1.440E+05S	1.633E+05S	1.843E+05S	2.035E+05S	2.224E+05S	2.415E+05S	2.639E+05S	2.826E+05S	3.098E+05S
200	0.683	1.382E+05S	1.545E+05S	1.711E+05S	1.882E+05S	2.051E+05S	2.219E+05S	2.393E+05S	2.571E+05S	2.739E+05S	2.891E+05S
300	1.005	1.386E+05S	1.557E+05S	1.721E+05S	1.885E+05S	2.052E+05S	2.221E+05S	2.394E+05S	2.568E+05S	2.732E+05S	2.883E+05S
400	1.463	1.387E+05S	1.555E+05S	1.719E+05S	1.885E+05S	2.052E+05S	2.221E+05S	2.394E+05S	2.568E+05S	2.733E+05S	2.883E+05S
500	2.117	1.387E+05S	1.554E+05S	1.719E+05S	1.885E+05S	2.053E+05S	2.222E+05S	2.395E+05S	2.569E+05S	2.733E+05S	2.884E+05S
600	3.057	1.386E+05S	1.553E+05S	1.719E+05S	1.885E+05S	2.053E+05S	2.222E+05S	2.394E+05S	2.569E+05S	2.733E+05S	2.883E+05S
700	4.411	1.386E+05S	1.553E+05S	1.719E+05S	1.885E+05S	2.053E+05S	2.222E+05S	2.396E+05S	2.569E+05S	2.733E+05S	2.884E+05S
800	6.361	1.386E+05S	1.553E+05S	1.719E+05S	1.884E+05S	2.053E+05S	2.222E+05S	2.394E+05S	2.568E+05S	2.733E+05S	2.883E+05S
900	9.170	1.385E+05S	1.553E+05S	1.719E+05S	1.885E+05S	2.053E+05S	2.222E+05S	2.395E+05S	2.568E+05S	2.733E+05S	2.884E+05S
1000	13.220	1.385E+05S	1.553E+05S	1.719E+05S	1.884E+05S	2.052E+05S	2.222E+05S	2.395E+05S	2.568E+05S	2.733E+05S	2.884E+05S
1100	19.057	1.385E+05S	1.553E+05S	1.719E+05S	1.886E+05S	2.053E+05S	2.222E+05S	2.395E+05S	2.568E+05S	2.733E+05S	2.884E+05S
1200	27.471	1.385E+05S	1.553E+05S	1.719E+05S	1.884E+05S	2.051E+05S	2.222E+05S	2.395E+05S	2.569E+05S	2.733E+05S	2.885E+05S
1300	39.600	1.385E+05S	1.553E+05S	1.720E+05S	1.885E+05S	2.053E+05S	2.223E+05S	2.394E+05S	2.568E+05S	2.733E+05S	2.883E+05S
1364	49.975	1.385E+05S	1.553E+05S	1.719E+05S	1.885E+05S	2.053E+05S	2.222E+05S	2.395E+05S	2.568E+05S	2.732E+05S	2.884E+05S

1 ZONE = 1 EDGE = 1 MACH NO. = 20.000 ANGLE OF ATTACK = 20.000 YAW ANGLE = 0.000

S U R F A C E P R E S S U R E S

0STEP	ZETA	31	32	33	34	35	36
1	0.104	3.360E+05S	3.474E+05S	3.567E+05S	3.638E+05S	3.687E+05S	3.711E+05S
100	0.459	3.365E+05S	3.363E+05S	3.357E+05S	3.381E+05S	3.434E+05S	3.467E+05S
200	0.683	3.023E+05S	3.134E+05S	3.229E+05S	3.306E+05S	3.363E+05S	3.388E+05S
300	1.005	3.016E+05S	3.131E+05S	3.229E+05S	3.304E+05S	3.359E+05S	3.383E+05S
400	1.463	3.018E+05S	3.133E+05S	3.229E+05S	3.305E+05S	3.359E+05S	3.384E+05S
500	2.117	3.018E+05S	3.133E+05S	3.228E+05S	3.305E+05S	3.361E+05S	3.384E+05S
600	3.057	3.017E+05S	3.133E+05S	3.229E+05S	3.305E+05S	3.360E+05S	3.384E+05S
700	4.411	3.017E+05S	3.133E+05S	3.229E+05S	3.306E+05S	3.361E+05S	3.384E+05S
800	6.361	3.018E+05S	3.133E+05S	3.229E+05S	3.305E+05S	3.361E+05S	3.384E+05S
900	9.170	3.017E+05S	3.133E+05S	3.229E+05S	3.305E+05S	3.360E+05S	3.385E+05S
1000	13.220	3.017E+05S	3.133E+05S	3.229E+05S	3.305E+05S	3.358E+05S	3.384E+05S
1100	19.057	3.017E+05S	3.133E+05S	3.229E+05S	3.306E+05S	3.360E+05S	3.385E+05S
1200	27.471	3.018E+05S	3.133E+05S	3.229E+05S	3.305E+05S	3.360E+05S	3.385E+05S
1300	39.600	3.017E+05S	3.132E+05S	3.229E+05S	3.305E+05S	3.360E+05S	3.384E+05S
1364	49.975	3.017E+05S	3.133E+05S	3.228E+05S	3.305E+05S	3.360E+05S	3.384E+05S

1 A E R O D Y N A M I C D A T A

0 F R E E S T R E A M C O N D I T I O N S

MACH NO. = 20.000 ANGLE OF ATTACK = 20.0000 ANGLE OF SIDE SLIP = 0.0000

REF AREA = 1.000000E+00 REF LENGTH = 1.000000E+00

0STEP	ZETA	CX	CY	CZ	CMX	CMY	CMZ	XCP	YCP
1	0.107	5.88457E-04	0.00000E+00	4.70158E-04	0.00000E+00	7.41649E-05	0.00000E+00	1.26033E-01	0.00000E+00
100	0.460	7.01070E-02	0.00000E+00	5.50821E-02	0.00000E+00	2.75195E-02	0.00000E+00	3.92535E-01	0.00000E+00
200	0.685	1.63137E-01	0.00000E+00	1.26780E-01	0.00000E+00	9.30832E-02	0.00000E+00	5.70584E-01	0. 0000E+00
300	1.007	3.59929E-01	0.00000E+00	2.79272E-01	0.00000E+00	2.98114E-01	0.00000E+00	8.28259E-01	0.00000E+00
400	1.465	7.68080E-01	0.00000E+00	5.96013E-01	0.00000E+00	9.19218E-01	0.00000E+00	1.19677E+00	0.00000E+00
500	2.121	1.61481E+00	0.00000E+00	1.25340E+00	0.00000E+00	2.78758E+00	0.00000E+00	1.72626E+00	0.00000E+00
600	3.063	3.37413E+00	0.00000E+00	2.61921E+00	0.00000E+00	8.39841E+00	0.00000E+00	2.48906E+00	0.00000E+00
700	4.419	7.02909E+00	0.00000E+00	5.45666E+00	0.00000E+00	2.52216E+01	0.00000E+00	3.58817E+00	0.00000E+00
800	6.372	1.46236E+01	0.00000E+00	1.13508E+01	0.00000E+00	7.56375E+01	0.00000E+00	5.17228E+00	0.00000E+00
900	9.187	3.04037E+01	0.00000E+00	2.35981E+01	0.00000E+00	2.26676E+02	0.00000E+00	7.45556E+00	0.00000E+00
1000	13.244	6.31926E+01	0.00000E+00	4.90456E+01	0.00000E+00	6.79121E+02	0.00000E+00	1.07468E+01	0.00000E+00
1100	19.092	1.31327E+02	0.00000E+00	1.01922E+02	0.00000E+00	2.03441E+03	0.00000E+00	1.54912E+01	0.00000E+00
1200	27.521	2.72901E+02	0.00000E+00	2.11790E+02	0.00000E+00	6.09393E+03	0.00000E+00	2.23302E+01	0.00000E+00
1300	39.672	5.67081E+02	0.00000E+00	4.40088E+02	0.00000E+00	1.82535E+04	0.00000E+00	3.21885E+01	0.00000E+00
1364	50.000	9.00777E+02	0.00000E+00	6.99054E+02	0.00000E+00	3.65426E+04	0.00000E+00	4.05679E+01	0.00000E+00

NORMAL STOP

B.2 HYPERSONIC BLUNT NOSE CYLINDER

B.2.1 BLUNT2 Output

```
1Hypersonic Blunt Nose Cylinder, M=20, Alpha=0, Alt=20,000 m

                    EXTERNAL PARAMETERS-KENSE-   0   0   1   0   0   0   0   0   0   0


                    TEST( 1) =   1.0000E-04
                    TEST( 2) =   4.0000E-03
                    TEST( 3) =   5.0000E-02
                    TEST( 4) =   5.0000E-04
                    TEST( 5) =   5.0000E-04
                    TEST(11) =   1.0000E-04
                    TEST(12) =   1.0000E-04

                                                  IRG =  1                    AIR
            RIDEAL      ZIDEAL      GIDEAL      RREAL         P0          H0          G0          PREF        TREF        SRREF
           2.8705E+02  1.0000E+00  1.3990E+00                          2.3255E+03  1.0000E+00  2.0265E+01  2.3222E+02  3.1450E+01
+                                                2.8705E+02  1.0133E+05
   DEL   =  1.0000000E+00
   IMAX  =2000                      IMIN  =2000                    IMOD  =  25                    IPRINT=2000
   IRSPCE=   0                      ISTART=  -1
   JMAX  =  50                      JPRINT=2000
   MMAX  =  25                      MMAXI =  25
   NMAX  =  18
   RN    =  5.0000000E-01
   STAB  =  1.0000000E+00
   X0    =  5.0000000E-01          XSTAG =  0.0000000E+00
   YMAX  =  1.2000000E+02          YSTAR =  4.5000000E+01

  ZEUS RELATED INPUT:
    NA = 36     MA = 36     IASYM =  1
    ZSTART =  5.0000000E-01     Z0 =  5.0000000E-01     ALPHA =  2.0000000E+01     BETA =  0.0000000E+00
    IBL = 0     NSTREM =  9     FTCONV =  1.0000000E+00     IUNITS =  1


                              FREE STREAM CONDITIONS
+                                                        ALTITUDE =   20000.
+                                                                                  1959 ARDC TABLES
      P           S/R           H            Q            M           RHO           T            Z            G          QQ
  5.52988E+03  2.53209E+01  2.16967E+05  5.87380E+03  2.00000E+01  8.89148E-02  2.16662E+02  1.00000E+00  1.38687E+00  1.53385E+06

                   91  ENTRIES IN SHOCK TABLE          UW1/Q1(MIN) =  1.000000E-01          UW1/Q1(MAX) =  1.100000E+00

    PSTAG=  2.9485E+06     TSTAG=  7.3519E+03     RHOSTG=  1.0549E+00     GSTAG=  1.1845E+00     HTOT=  1.7468E+07

    PSH=  2.8032E+06     TSH=  7.3119E+03     RHOSH=  1.0101E+00     GSH=  1.1839E+00     HSH=  1.7334E+07

    SRSH=  3.9222E+01     AMSH=  2.8524E-01

   DSH   =  7.0793211E-01

1Hypersonic Blunt Nose Cylinder, M=20, Alpha=0, Alt=20,000 m

         DEFAULT SPHERICAL GEOMETRY USED

         RN = 5.00000E-01

1Hypersonic Blunt Nose Cylinder, M=20, Alpha=0, Alt=20,000 m

                                M      Y              RB             RBTH
                                1  0.0000000E+00  5.0000000E-01  0.0000000E+00
                                2  8.7266468E-02  5.0000000E-01  0.0000000E+00
                                3  1.7453294E-01  5.0000000E-01  0.0000000E+00
                                4  2.6179940E-01  5.0000000E-01  0.0000000E+00
                                5  3.4906587E-01  5.0000000E-01  0.0000000E+00
                                6  4.3633235E-01  5.0000000E-01 -1.5355615E-08
                                7  5.2359879E-01  5.0000000E-01  0.0000000E+00
                                8  6.1086529E-01  5.0000000E-01  0.0000000E+00
                                9  6.9813174E-01  5.0000000E-01  0.0000000E+00
                               10  7.8539819E-01  5.0000000E-01  2.5692719E-08
                               11  8.7266469E-01  5.0000000E-01  0.0000000E+00
                               12  9.5993114E-01  5.0000000E-01  0.0000000E+00
                               13  1.0471976E+00  5.0000000E-01  0.0000000E+00
                               14  1.1344640E+00  5.0000000E-01  0.0000000E+00
                               15  1.2217306E+00  5.0000000E-01  0.0000000E+00
                               16  1.3089970E+00  4.9999997E-01  0.0000000E+00
                               17  1.3962635E+00  5.0000000E-01  0.0000000E+00
```

```
                          18  1.4835299E+00  5.0000000E-01  0.0000000E+00
                          19  1.5707964E+00  5.0000000E-01  0.0000000E+00
                          20  1.6580629E+00  5.0000000E-01  0.0000000E+00
                          21  1.7453294E+00  5.0000000E-01  0.0000000E+00
                          22  1.8325958E+00  5.0000000E-01  0.0000000E+00
                          23  1.9198623E+00  5.0000000E-01  0.0000000E+00
                          24  2.0071287E+00  5.0000000E-01  0.0000000E+00
                          25  2.0943952E+00  5.0000000E-01  0.0000000E+00
1Hypersonic Blunt Nose Cylinder, M=20, Alpha=0, Alt=20,000 m
        STEP      TIME            DELTA           PSTAG           WRMS
          1  5.5728725E-07  6.5766737E-02  2.9429010E+06  5.0127559E+00
          2  1.1144186E-06  6.5759756E-02  2.9360023E+06  9.4505558E+00
          3  1.6714025E-06  6.5748170E-02  2.9278905E+06  1.4038545E+01
          4  2.2283821E-06  6.5731928E-02  2.9186713E+06  1.8675589E+01
          5  2.7853721E-06  6.5711141E-02  2.9084403E+06  2.3286003E+01
       UW1/Q1(MIN) =  4.752480E-01          UW1/Q1(MAX) =  1.003999E+00
1Hypersonic Blunt Nose Cylinder, M=20, Alpha=0, Alt=20,000 m
        STEP      TIME            DELTA           PSTAG           WRMS
        201  1.0931705E-04  4.0710162E-02  2.9427413E+06  2.6345813E+02
        202  1.0978320E-04  4.0722951E-02  2.9403565E+06  2.6139301E+02
        203  1.1024878E-04  4.0736869E-02  2.9376098E+06  2.5923465E+02
        204  1.1071380E-04  4.0751837E-02  2.9345803E+06  2.5699255E+02
        205  1.1117827E-04  4.0767789E-02  2.9313635E+06  2.5467589E+02
       MMAX = 25          NMAX = 18
       UW1/Q1(MIN) =  3.239257E-01          UW1/Q1(MAX) =  9.966639E-01
        STEP      TIME            DELTA           PSTAG           WRMS
        401  1.9852728E-04  3.7458688E-02  2.9282870E+06  4.5209958E+02
        402  1.9895344E-04  3.7450656E-02  2.9283540E+06  4.4930344E+02
        403  1.9937946E-04  3.7442811E-02  2.9284715E+06  4.4651422E+02
        404  1.9980536E-04  3.7435144E-02  2.9286308E+06  4.4373187E+02
        405  2.0023114E-04  3.7427694E-02  2.9288178E+06  4.4095642E+02
       MMAX = 25          NMAX = 18
       UW1/Q1(MIN) =  3.434784E-01          UW1/Q1(MAX) =  9.983664E-01
        STEP      TIME            DELTA           PSTAG           WRMS
        601  2.8191469E-04  3.6079410E-02  2.9361170E+06  9.7029724E+01
        602  2.8232345E-04  3.6075525E-02  2.9360975E+06  9.6875244E+01
        603  2.8273216E-04  3.6071673E-02  2.9360833E+06  9.6731621E+01
        604  2.8314081E-04  3.6067858E-02  2.9360750E+06  9.6598328E+01
       MMAX = 25          NMAX = 18
       UW1/Q1(MIN) =  3.616154E-01          UW1/Q1(MAX) =  9.991269E-01
        STEP      TIME            DELTA           PSTAG           WRMS
        801  3.6272925E-04  3.5485916E-02  2.9385738E+06  8.2728256E+01
        802  3.6312939E-04  3.5483882E-02  2.9385738E+06  8.2704887E+01
        803  3.6352949E-04  3.5481848E-02  2.9385738E+06  8.2679306E+01
        804  3.6392955E-04  3.5479810E-02  2.9385738E+06  8.2651451E+01
        805  3.6432958E-04  3.5477776E-02  2.9385738E+06  8.2621193E+01
       MMAX = 25          NMAX = 18
       UW1/Q1(MIN) =  3.575845E-01          UW1/Q1(MAX) =  9.995127E-01
        STEP      TIME            DELTA           PSTAG           WRMS
       1001  4.4225689E-04  3.5176776E-02  2.9396670E+06  4.5741180E+01
       1002  4.4265250E-04  3.5175651E-02  2.9396725E+06  4.5658882E+01
       1003  4.4304808E-04  3.5174560E-02  2.9396838E+06  4.5577564E+01
       1004  4.4344366E-04  3.5173472E-02  2.9396923E+06  4.5497143E+01
       1005  4.4383921E-04  3.5172381E-02  2.9396978E+06  4.5417595E+01
       MMAX = 25          NMAX = 18
       UW1/Q1(MIN) =  3.552338E-01          UW1/Q1(MAX) =  9.997421E-01
        STEP      TIME            DELTA           PSTAG           WRMS
       1201  5.2111130E-04  3.5010364E-02  2.9405473E+06  2.7454748E+01
       1202  5.2150449E-04  3.5009783E-02  2.9405500E+06  2.7373650E+01
       1203  5.2189769E-04  3.5009202E-02  2.9405500E+06  2.7293016E+01
       1204  5.2229088E-04  3.5008620E-02  2.9405528E+06  2.7212839E+01
       1205  5.2268407E-04  3.5008039E-02  2.9405585E+06  2.7133110E+01
       1246  5.3879584E-04  3.4985255E-02  2.9406680E+06  2.4211784E+01
       1247  5.3918862E-04  3.4984749E-02  2.9406680E+06  2.4147606E+01
       1248  5.3958141E-04  3.4984238E-02  2.9406708E+06  2.4083683E+01
       1249  5.3997413E-04  3.4983728E-02  2.9406735E+06  2.4020014E+01
       1250  5.4036686E-04  3.4983221E-02  2.9406735E+06  2.3956598E+01
       MMAX = 25          NMAX = 18
       UW1/Q1(MIN) =  3.547883E-01          UW1/Q1(MAX) =  9.997761E-01

       CONVERGENCE CRITERIA SATISFIED AT STEP  1258
1Hypersonic Blunt Nose Cylinder, M=20, Alpha=0, Alt=20,000 m
        STEP      TIME            DELTA           PSTAG           WRMS
       1251  5.4075959E-04  3.4982711E-02  2.9406763E+06  2.3893423E+01
       1252  5.4115232E-04  3.4982204E-02  2.9406790E+06  2.3830505E+01
       1253  5.4154504E-04  3.4981694E-02  2.9406790E+06  2.3767822E+01
       1254  5.4193777E-04  3.4981187E-02  2.9406790E+06  2.3705353E+01
       1255  5.4233044E-04  3.4980677E-02  2.9406820E+06  2.3643064E+01
       1256  5.4272311E-04  3.4980170E-02  2.9406848E+06  2.3581018E+01
       1257  5.4311578E-04  3.4979660E-02  2.9406875E+06  2.3519159E+01
       1258  5.4350845E-04  3.4979153E-02  2.9406933E+06  2.3457474E+01
       MMAX = 25          NMAX = 18
       UW1/Q1(MIN) =  3.547164E-01          UW1/Q1(MAX) =  9.997822E-01
1Hypersonic Blunt Nose Cylinder, M=20, Alpha=0, Alt=20,000 m
                STEP ***          DT =   3.9266E-07    AT N = 18    M =  7

                                   TIME =   5.4351E-04

                          I =1258

        M    Y       RST          RSTH  PRESSURE CHECK    XB          YB          XS          YS        SIGMA
```

1	0.00	-1.2791E+00	0.0000E+00	2.6385E-03	0.0000E+00	0.0000E+00	-3.4979E-02	0.0000E+00		90.00
2	5.00	-1.3049E+00	-4.5730E-03	2.6157E-03	1.9026E-03	4.3578E-02	-3.3136E-02	4.6643E-02		85.49
3	10.00	-1.3283E+00	-9.5072E-03	2.5038E-03	7.5961E-03	8.6824E-02	-2.7650E-02	9.3039E-02		81.02
4	15.00	-1.3744E+00	-1.4586E-02	2.4143E-03	1.7037E-02	1.2941E-01	-1.8539E-02	1.3094E-01		76.56
5	20.00	-1.5935E+00	-2.0505E-02	2.4132E-03	3.0254E-02	1.7101E-01	-5.8889E-03	1.8413E-01		72.10
6	25.00	-1.3975E+00	-2.7470E-02	2.2751E-03	4.6846E-02	2.1131E-01	1.0201E-02	2.2840E-01		67.91
7	30.00	-1.9017E+00	-3.5874E-02	2.3108E-03	6.6987E-02	2.5000E-01	2.9581E-02	2.7160E-01		63.78
8	35.00	-2.3294E+00	-4.5470E-02	2.9303E-03	9.0424E-02	2.8679E-01	5.2150E-02	3.1359E-01		59.75
9	40.00	-1.7411E+00	-5.7176E-02	1.9174E-03	1.1698E-01	3.2139E-01	7.7770E-02	3.5429E-01		55.92
10	45.00	-2.7134E+00	-7.1186E-02	2.1361E-03	1.4645E-01	3.5355E-01	1.0631E-01	3.9369E-01		52.29
11	50.00	-4.5933E+00	-8.7775E-02	2.4802E-03	1.7861E-01	3.8302E-01	1.3768E-01	4.3180E-01		48.85
12	55.00	-3.3941E+00	-1.0751E-01	2.3172E-03	2.1321E-01	4.0958E-01	1.7181E-01	4.6871E-01		45.64
13	60.00	-3.5115E+00	-1.3068E-01	2.5401E-03	2.5000E-01	4.3301E-01	2.0875E-01	5.0445E-01		42.64
14	65.00	-6.1584E+00	-1.6037E-01	1.1400E-03	2.8869E-01	4.5315E-01	2.4846E-01	5.3944E-01		40.08
15	70.00	-5.6121E+00	-1.9358E-01	1.0881E-03	3.2899E-01	4.6985E-01	2.9118E-01	5.7373E-01		37.59
16	75.00	-9.6899E+00	-2.3484E-01	5.8347E-04	3.7059E-01	4.8296E-01	3.3714E-01	6.0778E-01		35.47
17	80.00	-9.7146E+00	-2.8222E-01	-1.4887E-04	4.1318E-01	4.9240E-01	3.8683E-01	6.4180E-01		33.41
18	85.00	-1.4621E+01	-3.3966E-01	-6.0058E-04	4.5642E-01	4.9810E-01	4.4084E-01	6.7615E-01		31.58
19	90.00	-1.5556E+01	-4.0856E-01	-2.8661E-04	5.0000E-01	5.0000E-01	5.0000E-01	7.1131E-01		29.87
20	95.00	-1.3845E+01	-4.9055E-01	-6.9174E-04	5.4358E-01	4.9810E-01	5.6540E-01	7.4749E-01		28.18
21	100.00	-2.0175E+01	-5.9399E-01	-1.0921E-03	5.8682E-01	4.9240E-01	6.3848E-01	7.8535E-01		26.68
22	105.00	-2.9370E+01	-7.2331E-01	-1.3102E-03	6.2941E-01	4.8296E-01	7.2121E-01	8.2556E-01		25.24
23	110.00	-4.1586E+01	-8.8911E-01	-1.0894E-03	6.7101E-01	4.6985E-01	8.1622E-01	8.6881E-01		23.88
24	115.00	-5.7368E+01	-1.1055E+00	-8.0395E-04	7.1131E-01	4.5315E-01	9.2737E-01	9.1650E-01		22.55
25	120.00	-8.0531E+01	-1.3984E+00	-4.0456E-04	7.5000E-01	4.3301E-01	1.0601E+00	9.7018E-01		21.30

I =1258 N = 1

M	P	RHO	T	U	V	S/R	MACH	R	DH
1	2.9407E+06	1.0525E+00	7.3498E+03	0.0000E+00	0.0000E+00	3.9222E+01	0.0000E+00	5.0000E-01	-4.0048E-04
3	2.8326E+06	1.0192E+00	7.3201E+03	0.0000E+00	-4.5719E+02	3.9222E+01	2.5203E-01	5.0000E-01	-9.4771E-05
5	2.5264E+06	9.2372E-01	7.2308E+03	0.0000E+00	-9.1623E+02	3.9222E+01	5.0941E-01	5.0000E-01	8.4126E-04
7	2.0794E+06	7.8100E-01	7.0835E+03	0.0000E+00	-1.3754E+03	3.9222E+01	7.7578E-01	5.0000E-01	2.5986E-03
9	1.5688E+06	6.1345E-01	6.8633E+03	0.0000E+00	-1.8346E+03	3.9222E+01	1.0570E+00	5.0000E-01	2.0270E-03
11	1.0832E+06	4.4664E-01	6.5813E+03	0.0000E+00	-2.2804E+03	3.9222E+01	1.3508E+00	5.0000E-01	8.9502E-04
13	6.8541E+05	3.0129E-01	6.2570E+03	0.0000E+00	-2.7094E+03	3.9222E+01	1.6594E+00	5.0000E-01	5.2810E-04
15	4.0303E+05	1.9171E-01	5.8679E+03	0.0000E+00	-3.1077E+03	3.9222E+01	1.9815E+00	5.0000E-01	7.1990E-04
17	2.2305E+05	1.1603E-01	5.4763E+03	0.0000E+00	-3.4701E+03	3.9222E+01	2.3149E+00	5.0000E-01	-3.9634E-03
19	1.1817E+05	6.7846E-02	5.0097E+03	0.0000E+00	-3.7843E+03	3.9222E+01	2.6512E+00	5.0000E-01	-2.8210E-03
21	5.9394E+04	3.8522E-02	4.4836E+03	0.0000E+00	-4.0726E+03	3.9222E+01	3.0285E+00	5.0000E-01	-2.6614E-03
23	2.8834E+04	2.1455E-02	3.9683E+03	0.0000E+00	-4.3188E+03	3.9222E+01	3.4323E+00	5.0000E-01	5.0437E-04
25	1.3531E+04	1.1435E-02	3.5627E+03	0.0000E+00	-4.5277E+03	3.9222E+01	3.8230E+00	5.0000E-01	-2.0030E-03

I =1258 N = 3

M	P	RHO	T	U	V	S/R	MACH	R	DH
1	2.9391E+06	1.0539E+00	7.3421E+03	-4.4882E+01	0.0000E+00	3.9200E+01	2.4696E-02	5.0412E-01	-3.0492E-03
3	2.8330E+06	1.0223E+00	7.3088E+03	-4.4156E+01	-5.1143E+02	3.9187E+01	2.8339E-01	5.0421E-01	-2.6464E-03
5	2.5329E+06	9.3160E-01	7.2077E+03	-4.1267E+01	-1.0179E+03	3.9144E+01	5.6814E-01	5.0451E-01	-2.2354E-03
7	2.0948E+06	7.9465E-01	7.0467E+03	-3.4719E+01	-1.5112E+03	3.9085E+01	8.5697E-01	5.0508E-01	-8.1640E-04
9	1.5948E+06	6.3329E-01	6.8020E+03	-2.1201E+01	-1.9874E+03	3.9018E+01	1.1540E+00	5.0602E-01	-1.2001E-03
11	1.1192E+06	4.7046E-01	6.5109E+03	5.0937E+00	-2.4271E+03	3.8946E+01	1.4517E+00	5.0749E-01	-4.3458E-03
13	7.2884E+05	3.2722E-01	6.1742E+03	5.1610E+01	-2.8294E+03	3.8910E+01	1.7510E+00	5.0970E-01	-3.7591E-03
15	4.4979E+05	2.1752E-01	5.8088E+03	1.2701E+02	-3.1785E+03	3.8880E+01	2.0444E+00	5.1301E-01	-5.7803E-03
17	2.6949E+05	1.4134E-01	5.4506E+03	2.3867E+02	-3.4732E+03	3.8864E+01	2.3306E+00	5.1785E-01	-1.2101E-02
19	1.6075E+05	9.1805E-02	5.0526E+03	3.9716E+02	-3.7015E+03	3.8854E+01	2.5997E+00	5.2486E-01	-1.6260E-02
21	9.6596E+04	6.0473E-02	4.6395E+03	6.1060E+02	-3.8742E+03	3.8825E+01	2.8647E+00	5.3500E-01	-2.3673E-02
23	6.0575E+04	4.1569E-02	4.2749E+03	8.8010E+02	-3.9783E+03	3.8802E+01	3.1123E+00	5.4995E-01	-2.8008E-02
25	4.0098E+04	2.9842E-02	3.9864E+03	1.2237E+03	-4.0071E+03	3.8771E+01	3.3276E+00	5.7297E-01	-3.5580E-02

I =1258 N = 6

M	P	RHO	T	U	V	S/R	MACH	R	DH
1	2.9378E+06	1.0508E+00	7.3451E+03	-1.2024E+02	0.0000E+00	3.9214E+01	6.6130E-02	5.1029E-01	-1.3214E-03
3	2.8307E+06	1.0225E+00	7.3045E+03	-1.1757E+02	-5.9218E+02	3.9176E+01	3.3348E-01	5.1053E-01	-1.1870E-03
5	2.5420E+06	9.4018E-01	7.1864E+03	-1.0815E+02	-1.1710E+03	3.9069E+01	6.5771E-01	5.1128E-01	-6.0230E-04
7	2.1205E+06	8.1596E-01	6.9876E+03	-8.8132E+01	-1.7191E+03	3.8902E+01	9.8299E-01	5.1270E-01	-2.7817E-04
9	1.6390E+06	6.6554E-01	6.7143E+03	-4.9154E+01	-2.2224E+03	3.8720E+01	1.3053E+00	5.1505E-01	-1.6170E-03
11	1.1794E+06	5.1021E-01	6.4027E+03	1.9901E+01	-2.6712E+03	3.8545E+01	1.6209E+00	5.1873E-01	-4.1646E-03
13	7.9853E+05	3.7144E-01	6.0353E+03	1.3360E+02	-3.0415E+03	3.8417E+01	1.9166E+00	5.2426E-01	-5.6229E-03
15	5.2025E+05	2.5947E-01	5.6957E+03	3.0099E+02	-3.3522E+03	3.8347E+01	2.1955E+00	5.3252E-01	-5.2820E-03
17	3.3557E+05	1.8019E-01	5.3587E+03	5.2957E+02	-3.5852E+03	3.8339E+01	2.4525E+00	5.4462E-01	-4.5436E-03
19	2.1828E+05	1.2672E-01	5.0034E+03	8.2006E+02	-3.7288E+03	3.8310E+01	2.6850E+00	5.6215E-01	-9.8028E-03
21	1.4518E+05	9.0471E-02	4.6880E+03	1.1743E+03	-3.8062E+03	3.8327E+01	2.9003E+00	5.8749E-01	-1.1181E-02
23	1.0063E+05	6.6689E-02	4.4217E+03	1.5813E+03	-3.7862E+03	3.8360E+01	3.0791E+00	6.2487E-01	-9.1432E-03
25	7.2984E+04	5.1977E-02	4.1586E+03	2.0401E+03	-3.6727E+03	3.8275E+01	3.2645E+00	6.8243E-01	-1.7842E-02

I =1258 N = 9

M	P	RHO	T	U	V	S/R	MACH	R	DH
1	2.9185E+06	1.0462E+00	7.3420E+03	-2.0472E+02	0.0000E+00	3.9217E+01	1.1263E-01	5.1646E-01	-9.9379E-04
3	2.8219E+06	1.0219E+00	7.2936E+03	-1.9923E+02	-6.7443E+02	3.9150E+01	3.8095E-01	5.1684E-01	-9.8628E-04
5	2.5484E+06	9.5020E-01	7.1550E+03	-1.8067E+02	-1.3269E+03	3.8965E+01	7.5215E-01	5.1805E-01	-6.1482E-04
7	2.1487E+06	8.4179E-01	6.9127E+03	-1.4293E+02	-1.9360E+03	3.8679E+01	1.1187E+00	5.2033E-01	-3.6591E-04
9	1.6904E+06	7.0490E-01	6.6104E+03	-7.3319E+01	-2.4778E+03	3.8374E+01	1.4753E+00	5.2409E-01	-8.8006E-04
11	1.2495E+06	5.5987E-01	6.2539E+03	4.3484E+01	-2.9358E+03	3.8113E+01	1.8124E+00	5.2996E-01	1.7344E-03
13	8.7742E+05	4.2687E-01	5.8596E+03	2.2114E+02	-3.2964E+03	3.7845E+01	2.1260E+00	5.3882E-01	-4.4641E-03
15	5.9751E+05	3.1633E-01	5.4558E+03	4.6562E+02	-3.5632E+03	3.7638E+01	2.4117E+00	5.5202E-01	-9.4227E-03
17	4.0624E+05	2.3301E-01	5.0903E+03	7.8308E+02	-3.7504E+03	3.7558E+01	2.6751E+00	5.7139E-01	-6.5944E-03
19	2.7940E+05	1.7698E-01	4.6726E+03	1.1433E+03	-3.8098E+03	3.7343E+01	2.9149E+00	5.9944E-01	-2.7275E-02
21	1.9422E+05	1.2637E-01	4.5456E+03	1.6106E+03	-3.8471E+03	3.7634E+01	3.0986E+00	6.3998E-01	9.2082E-03

23	1.3941E+05	1.0048E-01	4.1654E+03	2.0684E+03	-3.7363E+03	3.7316E+01	3.3324E+00	6.9979E-01	-1.4117E-02
25	1.0335E+05	7.7825E-02	4.0067E+03	2.5941E+03	-3.5538E+03	3.7367E+01	3.5057E+00	7.9189E-01	-2.5703E-03

I =1258 N = 12

M	P	RHO	T	U	V	S/R	MACH	R	DH
1	2.8938E+06	1.0385E+00	7.3357E+03	-2.9875E+02	0.0000E+00	3.9218E+01	1.6445E-01	5.2263E-01	-7.7492E-04
3	2.8043E+06	1.0188E+00	7.2788E+03	-2.8960E+02	-7.5843E+02	3.9120E+01	4.4980E-01	5.2316E-01	-7.6270E-04
5	2.5505E+06	9.6040E-01	7.1164E+03	-2.5948E+02	-1.4886E+03	3.8843E+01	8.5303E-01	5.2482E-01	-7.7415E-04
7	2.1790E+06	8.7156E-01	6.8265E+03	-1.9974E+02	-2.1602E+03	3.8427E+01	1.2633E+00	5.2795E-01	8.1182E 05
9	1.7506E+06	7.5803E-01	6.4521E+03	-9.4250E+01	-2.7449E+03	3.7929E+01	1.6656E+00	5.3312E-01	-3.7701E-03
11	1.3337E+06	6.3671E-01	5.9857E+03	7.4652E+01	-3.2300E+03	3.7415E+01	2.0575E+00	5.4120E-01	-9.2729E-03
13	9.7204E+05	5.1322E-01	5.5162E+03	3.1809E+02	-3.5871E+03	3.7012E+01	2.4111E+00	5.5338E-01	-1.3239E-02
15	6.9337E+05	4.0760E-01	5.0299E+03	6.3818E+02	-3.8333E+03	3.6665E+01	2.7421E+00	5.7153E-01	-1.6039E-02
17	4.9392E+05	3.1355E-01	4.7034E+03	1.0425E+03	-3.9969E+03	3.6569E+01	3.0261E+00	5.9816E-01	-2.5350E-04
19	3.5390E+05	2.4280E-01	4.4065E+03	1.4920E+03	-4.0296E+03	3.6446E+01	3.2688E+00	6.3673E-01	4.5977E-03
21	2.5599E+05	1.9352E-01	4.0808E+03	1.9865E+03	-3.9646E+03	3.6125E+01	3.5320E+00	6.9248E-01	-8.8475E-03
23	1.8764E+05	1.5147E-01	3.8735E+03	2.5371E+03	-3.8222E+03	3.5992E+01	3.7680E+00	7.7472E-01	-1.9[illegible]85E-03
25	1.3991E+05	1.2227E-01	3.6449E+03	3.0949E+03	-3.5721E+03	3.5668E+01	4.0254E+00	9.0135E-01	-5.9186E-03

I =1258 N = 15

M	P	RHO	T	U	V	S/R	MACH	R	DH
1	2.8565E+06	1.0269E+00	7.3256E+03	-4.0274E+02	0.0000E+00	3.9218E+01	2.2191E-01	5.2881E-01	-5.7846E-04
3	2.7757E+06	1.0127E+00	7.2596E+03	-3.8924E+02	-8.4172E+02	3.9086E+01	5.1494E-01	5.2947E-01	-5.9706E-04
5	2.5465E+06	9.7107E-01	7.0611E+03	-3.4549E+02	-1.6493E+03	3.8704E+01	9.5743E-01	5.3159E-01	-8.5163E-04
7	2.2104E+06	9.0622E-01	6.7247E+03	-2.6005E+02	-2.3855E+03	3.8134E+01	1.4150E+00	5.3557E-01	-6.4486E-04
9	1.8209E+06	8.2604E-01	6.2450E+03	-1.1452E+02	-3.0212E+03	3.7430E+01	1.8759E+00	5.4215E-01	-4.5486E-03
11	1.4361E+06	7.3726E-01	5.6735E+03	1.0967E+02	-3.5387E+03	3.6698E+01	2.3361E+00	5.5243E-01	-1.1452E-02
13	1.0943E+06	6.4275E-01	5.0715E+03	4.2374E+02	-3.9181E+03	3.6065E+01	2.7769E+00	5.6793E 01	-8.2090E-03
15	8.2020E+05	5.4821E-01	4.5670E+03	8.2885E+02	-4.1806E+03	3.5513E+01	3.1961E+00	5.9104E-01	-1.5545E-03
17	6.1567E+05	4.5984E-01	4.1911E+03	1.3090E+03	-4.3013E+03	3.5035E+01	3.5532E+00	6.2493E-01	-5.4294E-04
19	4.6403E+05	3.8540E-01	3.8677E+03	1.8491E+03	-4.3141E+03	3.4534E+01	3.8968E+00	6.7402E-01	-4.0585E-03
21	3.4983E+05	3.2132E-01	3.5817E+03	2.4218E+03	-4.2172E+03	3.4037E+01	4.2256E+00	7.4497E-01	-6.2888E-03
23	2.6439E+05	2.6775E-01	3.3154E+03	3.0232E+03	-4.0086E+03	3.3561E+01	4.5577E+00	8.4964E-01	-4.3620E-03
25	1.9887E+05	2.2716E-01	2.9998E+03	3.6303E+03	-3.6902E+03	3.2972E+01	4.9568E+00	1.0108E+00	-4.2408E-03

I =1258 N = 18

M	P	RHO	T	U	V	S/R	MACH	R	DH
1	2.8019E+06	1.0100E+00	7.3106E+03	-5.1827E+02	0.0000E+00	3.9219E+01	2.8597E-01	5.3498E-01	-3.9011E-04
3	2.7316E+06	1.0020E+00	7.2347E+03	-4.9969E+02	-9.2620E+02	3.9047E+01	5.8601E-01	5.3579E-01	-3.8892E-04
5	2.5323E+06	9.8003E-01	6.9953E+03	-4.4002E+02	-1.8155E+03	3.8549E+01	1.0694E+00	5.3836E-01	-4.3017E-04
7	2.2407E+06	9.4535E-01	6.6073E+03	-3.2508E+02	-2.6224E+03	3.7804E+01	1.5811E+00	5.4319E-01	-7.8297E-04
9	1.9032E+06	9.0989E-01	6.0172E+03	-1.3488E+02	-3.3228E+03	3.6885E+01	2.1174E+00	5.5118E-01	-3.9637E-04
11	1.5671E+06	8.8496E-01	5.2654E+03	1.5160E+02	-3.8880E+03	3.5864E+01	2.6885E+00	5.6367E-01	-1.1504E-03
13	1.2667E+06	8.6562E-01	4.5359E+03	5.4399E+02	-4.3059E+03	3.4769E+01	3.2852E+00	5.8249E-01	-6.8939E-04
15	1.0201E+06	8.1823E-01	4.0263E+03	1.0310E+03	-4.5557E+03	3.3787E+01	3.8089E+00	6.1055E-01	-9.3299E-04
17	8.2228E+05	7.5790E-01	3.6203E+03	1.5928E+03	-4.6531E+03	3.2946E+01	4.2720E+00	6.5170E-01	-1.4128E-03
19	6.6379E+05	6.9963E-01	3.2391E+03	2.2042E+03	-4.6077E+03	3.2191E+01	4.7114E+00	7.1131E-01	-1.9228E-03
21	5.3255E+05	6.4705E-01	2.8490E+03	2.8333E+03	-4.4339E+03	3.1499E+01	5.1739E+00	7.9747E-01	-2.0699E-03
23	4.2331E+05	6.0219E-01	2.4439E+03	3.4514E+03	-4.1324E+03	3.0850E+01	5.6880E+00	9.2456E-01	-3.4659E-03
25	3.3099E+05	5.6701E-01	2.0336E+03	4.0352E+03	-3.7159E+03	3.0189E+01	6.3132E+00	1.1203E+00	-5.1491E-03

1ZEUS INITIAL DATA GENERATED BY 2IT

IZN = 1 NA = 36 MA = 36
PINF = 5.52988E+03 DINF = 8.89148E-02 XMINF = 20.00 ALPHA =20.00 BETA = 0.00
KSTART = 0 ZSTART = 5.00000E-01 IASYM = 1 ICORD = 1 ISHOCK = 1

XFX, XFY, XFZ = 7.56896E+04 0.00000E+00 2.33032E+05 XMX, XMY, XMZ = 0.00000E+00 1.24163E+05 0.00000E+00

PLANE M = 1 PHI = 2.500

N	R	P	RHO	U	V	W
1	5.05893E-01	4.50897E+04	3.11471E-02	1.27880E+02	-6.06103E+01	4.19273E+03
3	5.29464E-01	6.19923E+04	4.17315E-02	5.95243E+02	-3.78768E+01	4.11372E+03
5	5.53036E-01	7.76170E+04	5.07866E-02	9.17566E+02	-2.24753E+01	4.00558E+03
7	5.76607E-01	9.20749E+04	5.89468E-02	1.18508E+03	-1.02045E+01	3.89545E+03
9	6.00179E-01	1.05993E+05	6.75026E-02	1.38283E+03	-6.58090E-01	3.82352E+03
11	6.23750E-01	1.19354E+05	7.60630E-02	1.57321E+03	7.79345E+00	3.75556E+03
13	6.47322E-01	1.32654E+05	8.66395E-02	1.75642E+03	1.61820E+01	3.73176E+03
15	6.70893E-01	1.46549E+05	9.94741E-02	1.89733E+03	2.27478E+01	3.75253E+03
17	6.94464E-01	1.61006E+05	1.11496E-01	2.03713E+03	2.86028E+01	3.73170E+03
19	7.18036E-01	1.76311E+05	1.24023E-01	2.17855E+03	3.43416E+01	3.69344E+03
21	7.41607E-01	1.92797E+05	1.39335E-01	2.32558E+03	4.01628E+01	3.67679E+03
23	7.65179E-01	2.10943E+05	1.59588E-01	2.47622E+03	4.60887E+01	3.70605E+03
25	7.88750E-01	2.31518E+05	1.85743E-01	2.62524E+03	5.17797E+01	3.76957E+03
27	8.12322E-01	2.55723E+05	2.19139E-01	2.77733E+03	5.73931E+01	3.83861E+03
29	8.35893E-01	2.84824E+05	2.61990E-01	2.93297E+03	6.30440E+01	3.89883E+03
31	8.59465E-01	3.20557E+05	3.19316E-01	3.08639E+03	6.86052E+01	3.95446E+03
33	8.83036E-01	3.65237E+05	3.98443E-01	3.23089E+03	7.39098E+01	4.00467E+03
35	9.06607E-01	4.22123E+05	5.11269E-01	3.36008E+03	7.87909E+01	4.05064E+03
36	9.18393E-01	4.56959E+05	5.83705E-01	3.41795E+03	8.11490E+01	4.06414E+03

PLANE M = 6 PHI = 27.500

N		P	RHO	U	V	W
1	5.05443E-01	4.50897E+04	3.11471E-02	4.26613E+02	-5.59446E+02	4.13632E+03
3	5.27213E-01	6.19923E+04	4.17315E-02	7.95129E+02	-3.39193E+02	4.06663E+03

5	5.48983E-01	7.76170E+04	5.07866E-02	1.05281E+03	-1.87350E+02	3.96783E+03
7	5.70754E-01	9.20749E+04	5.89468E-02	1.27470E+03	-6.48887E+01	3.86652E+03
9	5.92524E-01	1.05993E+05	6.75026E-02	1.43884E+03	3.12828E+01	3.80267E+03
11	6.14295E-01	1.19353E+05	7.60629E-02	1.60396E+03	1.18882E+02	3.74064E+03
13	6.36065E-01	1.32654E+05	8.66395E-02	1.75075E+03	1.99872E+02	3.72911E+03
15	6.57835E-01	1.46549E+05	9.94741E-02	1.86776E+03	2.65649E+02	3.75802E+03
17	6.79606E-01	1.61006E+05	1.11496E-01	1.99553E+03	3.29237E+02	3.73975E+03
19	7.01376E-01	1.76311E+05	1.24023E-01	2.12338E+03	3.90662E+02	3.70505E+03
21	7.23147E-01	1.92797E+05	1.39335E-01	2.25462E+03	4.51951E+02	3.69339E+03
23	7.44917E-01	2.10942E+05	1.59588E-01	2.38586E+03	5.12611E+02	3.73007E+03
25	7.66687E-01	2.31518E+05	1.85743E-01	2.51762E+03	5.71610E+02	3.79988E+03
27	7.88458E-01	2.55723E+05	2.19139E-01	2.65474E+03	6.30916E+02	3.87376E+03
29	8.10228E-01	2.84824E+05	2.61990E-01	2.79529E+03	6.90618E+02	3.93911E+03
31	8.31999E-01	3.20557E+05	3.19316E-01	2.93426E+03	7.49587E+02	3.99957E+03
33	8.53769E-01	3.65237E+05	3.98443E-01	3.06557E+03	8.06136E+02	4.05387E+03
35	8.75539E-01	4.22123E+05	5.11269E-01	3.18249E+03	8.58063E+02	4.10360E+03
36	8.86424E-01	4.56959E+05	5.83704E-01	3.23641E+03	8.83128E+02	4.11893E+03

PLANE M = 12 PHI = 57.500

N	R	P	RHO	U	V	W
1	5.04225E-01	6.34664E+04	4.10708E-02	1.04589E+03	-5.64818E+02	3.90466E+03
3	5.21126E-01	8.16284E+04	5.21969E-02	1.19143E+03	-2.72905E+02	3.87758E+03
5	5.38026E-01	9.85473E+04	6.15427E-02	1.30958E+03	-5.89800E+01	3.80134E+03
7	5.54927E-01	1.14405E+05	7.02708E-02	1.41774E+03	1.22095E+02	3.72462E+03
9	5.71827E-01	1.29591E+05	7.96893E-02	1.49515E+03	2.67083E+02	3.69481E+03
11	5.88728E-01	1.44484E+05	8.[illegible]E-02	1.58199E+03	4.04385E+02	3.68475E+03
13	6.05629E-01	1.59635E+05	[illegible]E-01	1.64603E+03	5.17193E+02	3.70446E+03
15	6.22529E-01	1.75028E+05	[illegible]E-01	1.72294E+03	6.30603E+02	3.68213E+03
17	6.39430E-01	1.90641E+05	1.23906E-01	1.81116E+03	7.47163E+02	3.63451E+03
19	6.56330E-01	2.07648E+05	1.39327E-01	1.88523E+03	8.47820E+02	3.65202E+03
21	6.73231E-01	2.26294E+05	1.59374E-01	1.96009E+03	9.45574E+02	3.71328E+03
23	6.90132E-01	2.47109E+05	1.83111E-01	2.03619E+03	1.04083E+03	3.78562E+03
25	7.07032E-01	2.70445E+05	2.10358E-01	2.12140E+03	1.14050E+03	3.84431E+03
27	7.23933E-01	2.97344E+05	2.44598E-01	2.21350E+03	1.24370E+03	3.91111E+03
29	7.40833E-01	3.29214E+05	2.89741E-01	2.30849E+03	1.34771E+03	3.99205E+03
31	7.57734E-01	3.68133E+05	3.49240E-01	2.40493E+03	1.45292E+03	4.06844E+03
33	7.74634E-01	4.16310E+05	4.28576E-01	2.49731E+03	1.55553E+03	4.13355E+03
35	7.91535E-01	4.76444E+05	5.38075E-01	2.58180E+03	1.65203E+03	4.19076E+03

PLANE M = 18 PHI = 87.500

N	R	P	RHO	U	V	W
1	5.03028E-01	1.23005E+05	7.08036E-02	1.28778E+03	-1.97149E+00	3.58388E+03
3	5.15138E-01	1.43567E+05	8.31044E-02	1.27554E+03	2.07542E+02	3.61011E+03
5	5.27248E-01	1.63061E+05	9.30635E-02	1.28304E+03	3.79843E+02	3.55344E+03
7	5.39358E-01	1.81443E+05	1.03159E-01	1.29183E+03	5.34189E+02	3.52405E+03
9	5.51468E-01	1.99460E+05	1.14567E-01	1.29398E+03	6.59440E+02	3.54041E+03
11	5.63578E-01	2.17451E+05	1.26178E-01	1.30940E+03	7.87416E+02	3.54576E+03
13	5.75688E-01	2.35613E+05	1.38530E-01	1.32026E+03	8.96784E+02	3.56114E+03
15	5.87798E-01	2.54830E+05	1.54077E-01	1.33812E+03	1.00956E+03	3.61124E+03
17	5.99908E-01	2.74814E+05	1.72582E-01	1.34998E+03	1.10528E+03	3.68427E+03
19	6.12019E-01	2.96206E+05	1.88850E-01	1.37526E+03	1.21367E+03	3.68076E+03
21	6.24129E-01	3.18532E+05	2.05784E-01	1.40528E+03	1.32622E+03	3.66616E+03
23	6.36239E-01	3.43313E+05	2.30763E-01	1.43249E+03	1.43248E+03	3.71679E+03
25	6.48349E-01	3.70979E+05	2.64277E-01	1.46235E+03	1.53979E+03	3.81119E+03
27	6.60459E-01	4.03127E+05	3.05099E-01	1.49569E+03	1.64975E+03	3.91289E+03
29	6.72569E-01	4.40569E+05	3.53783E-01	1.53265E+03	1.76422E+03	4.00332E+03
31	6.84679E-01	4.84861E+05	4.14701E-01	1.57193E+03	1.88136E+03	4.09026E+03
33	6.96789E-01	5.38671E+05	4.94172E-01	1.61135E+03	1.99660E+03	4.17619E+03
35	7.08899E-01	6.03931E+05	5.97105E-01	1.64937E+03	2.10946E+03	4.25181E+03
36	7.14954E-01	6.43207E+05	6.63077E-01	1.66419E+03	2.16115E+03	4.29193E+03

PLANE M = 24 PHI = 117.500

N	R	P	RHO	U	V	W
1	5.02176E-01	2.28381E+05	1.19312E-01	9.28784E+02	5.19228E+02	3.34506E+03
3	5.10878E-01	2.50513E+05	1.32477E-01	8.66217E+02	6.26276E+02	3.40472E+03
5	5.19580E-01	2.72160E+05	1.42805E-01	8.24651E+02	7.28943E+02	3.36917E+03
7	5.28282E-01	2.93069E+05	1.54380E-01	7.84388E+02	8.22790E+02	3.38072E+03
9	5.36984E-01	3.13836E+05	1.66631E-01	7.50668E+02	9.06307E+02	3.40409E+03
11	5.45686E-01	3.34619E+05	1.79596E-01	7.21911E+02	9.97112E+02	3.42983E+03
13	5.54388E-01	3.55826E+05	1.95192E-01	6.93737E+02	1.07126E+03	3.49630E+03
15	5.63090E-01	3.78247E+05	2.10722E-01	6.71876E+02	1.15772E+03	3.52805E+03
17	5.71792E-01	4.01063E+05	2.28749E-01	6.49778E+02	1.23895E+03	3.58100E+03
20	5.84845E-01	4.38841E+05	2.67750E-01	6.17791E+02	1.35704E+03	3.74900E+03
21	5.89196E-01	4.52474E+05	2.80733E-01	6.09400E+02	1.39597E+03	3.78001E+03
23	5.97898E-01	4.81672E+05	3.04456E-01	5.94946E+02	1.48750E+03	3.79640E+03
25	6.06600E-01	5.13473E+05	3.35090E-01	5.80409E+02	1.57746E+03	3.84300E+03
27	6.15302E-01	5.49507E+05	3.76422E-01	5.65184E+02	1.66594E+03	3.92522E+03
29	6.24004E-01	5.90424E+05	4.26995E-01	5.51831E+02	1.75970E+03	4.02243E+03
31	6.32706E-01	6.38042E+05	4.89390E-01	5.40513E+02	1.85747E+03	4.12672E+03
33	6.41408E-01	6.94979E+05	5.68801E-01	5.29407E+02	1.95656E+03	4.23842E+03
35	6.50110E-01	7.62267E+05	6.69329E-01	5.17479E+02	2.05189E+03	4.34954E+03
36	6.54461E-01	8.01766E+05	7.26968E-01	5.10658E+02	2.09835E+03	4.39239E+03

PLANE M = 30 PHI = 147.500

N	R	P	RHO	U	V	W
1	5.01703E-01	4.08408E+05	1.95198E-01	3.04170E+02	5.13634E+02	3.07553E+03
3	5.08516E-01	4.30444E+05	2.08815E-01	2.40892E+02	5.57370E+02	3.16573E+03
5	5.15329E-01	4.52607E+05	2.19100E-01	1.85903E+02	6.06221E+02	3.15583E+03
7	5.22142E-01	4.74431E+05	2.31443E-01	1.32243E+02	6.50613E+02	3.19875E+03
9	5.28954E-01	4.96483E+05	2.44829E-01	8.42503E+01	6.93089E+02	3.25552E+03
11	5.35767E-01	5.19221E+05	2.58831E-01	3.64799E+01	7.38915E+02	3.30857E+03
13	5.42580E-01	5.42419E+05	2.73770E-01	-7.84019E+00	7.80442E+02	3.36065E+03
15	5.49393E-01	5.66474E+05	2.92048E-01	-5.54704E+01	8.27221E+02	3.44004E+03
17	5.56206E-01	5.91772E+05	3.11717E-01	-9.67004E+01	8.69075E+02	3.51383E+03
19	5.63018E-01	6.18997E+05	3.32967E-01	-1.41673E+02	9.19302E+02	3.57623E+03
21	5.69831E-01	6.48039E+05	3.63394E-01	-1.88979E+02	9.65733E+02	3.69532E+03
23	5.76644E-01	6.79971E+05	3.95218E-01	-2.33293E+02	1.01254E+03	3.78615E+03
25	5.83457E-01	7.14208E+05	4.22519E-01	-2.75813E+02	1.06301E+03	3.82090E+03
27	5.90270E-01	7.51810E+05	4.59481E-01	-3.21601E+02	1.11676E+03	3.89004E+03
29	5.97082E-01	7.94100E+05	5.13409E-01	-3.68408E+02	1.17146E+03	4.00891E+03
31	6.03895E-01	8.42786E+05	5.76693E-01	-4.15074E+02	1.22720E+03	4.12177E+03
33	6.10708E-01	8.99287E+05	6.50744E-01	-4.63621E+02	1.28481E+03	4.23323E+03
35	6.17521E-01	9.64052E+05	7.40231E-01	-5.11990E+02	1.34240E+03	4.34964E+03
36	6.20927E-01	1.00107E+06	7.91198E-01	-5.36850E+02	1.37190E+03	4.40335E+03

PLANE M = 36 PHI = 177.500

N	R	P	RHO	U	V	W
1	5.01536E-01	4.08408E+05	1.95198E-01	-1.31155E+01	4.99661E+01	3.13250E+03
3	5.07682E-01	4.30444E+05	2.08815E-01	-7.37718E+01	5.28534E+01	3.22216E+03
5	5.13828E-01	4.52607E+05	2.19100E-01	-1.32389E+02	5.63776E+01	3.21569E+03
7	5.19974E-01	4.74431E+05	2.31443E-01	-1.88779E+02	5.95523E+01	3.26092E+03
9	5.26120E-01	4.96483E+05	2.44829E-01	-2.41482E+02	6.26842E+01	3.32019E+03
11	5.32266E-01	5.19221E+05	2.58831E-01	-2.96377E+02	6.61558E+01	3.37665E+03
13	5.38412E-01	5.42419E+05	2.73770E-01	-3.47417E+02	6.93123E+01	3.43185E+03
15	5.44558E-01	5.66474E+05	2.92048E-01	-4.01517E+02	7.28219E+01	3.51493E+03
17	5.50704E-01	5.91772E+05	3.11717E-01	-4.52259E+02	7.61256E+01	3.59184E+03
19	5.56850E-01	6.18997E+05	3.32967E-01	-5.09706E+02	8.01403E+01	3.65901E+03
21	5.62996E-01	6.48039E+05	3.63394E-01	-5.59717E+02	8.34615E+01	3.78200E+03
23	5.69141E-01	6.79971E+05	3.95219E-01	-6.13079E+02	8.70884E+01	3.87700E+03
25	5.75287E-01	7.14208E+05	4.22519E-01	-6.71988E+02	9.12928E+01	3.91732E+03
27	5.81433E-01	7.51810E+05	4.59481E-01	-7.31551E+02	9.56097E+01	3.99232E+03
29	5.87579E-01	7.94100E+05	5.13409E-01	-7.91341E+02	9.99577E+01	4.11621E+03
31	5.93725E-01	8.42788E+05	5.76695E-01	-8.53208E+02	1.04475E+02	4.23420E+03
33	5.99871E-01	8.99286E+05	6.50744E-01	-9.16009E+02	1.09079E+02	4.35143E+03
35	6.06017E-01	9.64052E+05	7.40230E-01	-9.78731E+02	1.13688E+02	4.47356E+03
36	6.09090E-01	1.00107E+06	7.91198E-01	-1.01152E+03	1.16073E+02	4.53025E+03

1SHOCK DATA FOR ZEUS

M	C	CZ	CPHI	PHI
1	9.24286E-01	9.61111E-01	-1.41036E-02	2.50000E+00
3	9.17666E-01	9.48112E-01	-6.85406E-02	1.25000E+01
5	9.02486E-01	9.18274E-01	-1.15430E-01	2.25000E+01
7	8.79361E-01	8.72594E-01	-1.50059E-01	3.25000E+01
9	8.50172E-01	8.14522E-01	-1.70278E-01	4.25000E+01
11	8.20553E-01	7.56569E-01	-1.79262E-01	5.25000E+01
13	7.88859E-01	6.93760E-01	-1.76687E-01	6.25000E+01
15	7.58857E-01	6.33946E-01	-1.66993E-01	7.25000E+01
17	7.31285E-01	5.79489E-01	-1.52921E-01	8.25000E+01
19	7.05739E-01	5.28376E-01	-1.35594E-01	9.25000E+01
21	6.83649E-01	4.82485E-01	-1.17210E-01	1.02500E+02
23	6.65103E-01	4.42779E-01	-9.90278E-02	1.12500E+02
25	6.49050E-01	4.07447E-01	-8.11792E-02	1.22500E+02
27	6.36596E-01	3.79871E-01	-6.48930E-02	1.32500E+02
29	6.26445E-01	3.56429E-01	-4.94732E-02	1.42500E+02
31	6.19289E-01	3.39007E-01	-3.52838E-02	1.52500E+02
33	6.14146E-01	3.26190E-01	-2.19254E-02	1.62500E+02
35	6.11218E-01	3.18767E-01	-9.25615E-03	1.72500E+02
36	6.10626E-01	3.17255E-01	-3.07567E-03	1.77500E+02

USER TIME = 305.0160
SYSTEM TIME = 1.234340

FORTRAN STOP

B.2.2 ZEUS Output

1 P R O G R A M Z E U S

```
**** INTEGRATION CONTROL ****
ICORD   =        1            (0-CARTESIAN, 1-CYLINDRICAL COORDINATES)
ZETA    =      0.50000        (INITIAL ZETA)
ZETAEND =     10.00000        (MAXIMUM ZETA)
KSTART  =        0            (INITIAL STEP NUMBER)
KEND    =     5000            (MAXIMUM STEP NUMBER)
FCFL    =      0.90000        (CFL SAFETY FACTOR)
XKI     =      1.000000       (INTERIOR POINT LIMITER)
IAPR    =        0            (0-APPROXIMATE RIEMANN PROBLEM
                                1-COMPLETE RIEMANN PROBLEM)
ISHFLUX =        0            (FLUX AT SHOCK- 0-RIEMANN PROBLEM
                                                 1-FREESTREAM PROPERTIES)
ISHANG  =        1            (SHOCK ANGLE  - 0-RIEMANN PROBLEM
                                                 1-ROE AVERAGED VARIABLES)


**** BOUNDARY CONDITIONS ****
NXKE    =  0       (NUMBER OF EDGES WITH NON-DEFAULT LIMITER SETTINGS)
NSUR    =  0       (NUMBER OF EDGES WITH NON-DEFAULT SURFACE TYPE)
DFAC    =   0.9000 (REDUCE TURNS WHICH ARE TOO LARGE BY DFAC)
ISHOCK  =  1       (1-SHOCK, 0-NO SHOCK ON EDGE 3)
IASYM   =  1       (0-NO SYMMETRY,1-PITCH PLANE SYMMETRY)


SURFACE POINT LIMITER
   ZONE     EDGE 1    EDGE 2    EDGE 3    EDGE 4
    1      1.000     0.000     2.000     0.000


SURFACE TYPE
   ZONE     EDGE 1    EDGE 2    EDGE 3    EDGE 4
    1         1         0         1         0


**** OUTPUT CONTROL ****

    PRINTER (file 6)
IPRINT  =   250     (PRINT FLOW FIELD IF STEP NUMBER IS EVENLY DIVISIBLE BY IPRINT)
ISKIP   =    10     (PRINT STEP SIZE IF STEP NUMBER IS EVENLY DIVISIBLE BY ISKIP)
NSKIP   =     6     (PRINT N PLANES WHICH ARE EVENLY DIVISIBLE BY NSKIP)
MSKIP   =     6     (PRINT M PLANES WHICH ARE EVENLY DIVISIBLE BY MSKIP)


PRESSURE SUMMARY (PLOTZA)
KSKIP   =    40     (PRINT SURFACE PRESSURE IF STEP NUMBER IS EVENLY DIVISIBLE BY KSKIP)
NPRT    =   100     (DON'T PRINT POINTS IF N>NPRT)
DELZA   = 10000.000 (PRINT SURFACE PRESSURE EVERY ZETA = DELZA)
JSPPR   =     0     (NUMBER OF NON-DEFAULT EDGES)
JSPDIS  =     0     (PRINT SURFACE GRID POINT LOCATIONS)
SURFACE PRESSURE OUTPUT CONTROL: 0-DON'T PRINT,1-PRINT.
   ZONE     EDGE 1    EDGE 2    EDGE 3    EDGE 4
    1         1         0         0         0


PLOT FILE (PLOTZC)
IPLOT   = 10000     WRITE TO PLOTZC IF STEP NUMBER IS EVENLY DIVISIBLE BY IPLOT
DELZC   = 10000.000 (WRITE PLOT TAPE EVERY ZETA = DELZC).
IPLOTN  =     2     NUMBER OF TARGET PLOT STATIONS
ZPLOT   =    0.50000  10.00000


*****AERODYNAMICS DATA*****
AREF    =    1.0000 (REFERENCE AREA)
ALREF   =    1.0000 (REFERENCE LENGTH)
IEFORCE =     0     (0 - DONT;1 - DO PRINT EDGE LOADS)


*****SEPARATION MODELING*****
IVIS    =     0     (0 - INVISCID, 1 - CLIPPING, 2 - FORCED SEPARATION)


*****GAS TYPE*****
```

```
                IGAS    =     1     (0-PERFECT  ' EQUILIBRIUM AIR)


                ******UNITS******
                IUNITS  =     1     (0-ENGLISH, 1-METRIC)


0                **** INITIAL DATA PLANE ****
                IMOD    =     1       (0 SELF START;1 FROM TAPE START)
                MACH    =    20.0000(FREE-STREAM MACH NUMBER)
                ALPHA   =    20.0000(ANGLE OF ATTACK)
                BETA    =     0.0000(YAW ANGLE)
                PINF    =  5529.8779(FREE-STREAM PRESSURE)
                DINF    =  8.8915E-02(FREE-STREAM DENSITY)
                HO      =  1.5162E+12(STAGNATION ENTHALPY)
                SINF    =     0.0000(FREE-STREAM ENTROPY)
                IZN     =     1       (NUMBER OF ZONES)
                NA      =    36       (CELLS BETWEEN EDGES 1 AND 3)
                MA      =    36       (TOTAL CELLS BETWEEN EDGES 2 AND 4)
                  MA/ZONE:   36
                IMESHF  =     0      (0-UNIFORM MESH,1-CLUSTERED MESH
                                     BETWEEN EDGES 1 AND 3)
                IMESHG  =     0      (0-UNIFORM,1-CLUSTERED MESH
                                     BETWEEN EDGES 2 AND 4)


1                STEP =     0     ZETA =   5.0000000E-01     DZETA =   0.0000000E+00
                MACH NO. =   2.0000000E+01     ALPHA =   2.0000000E+01     BETA =   0.0000000E+00
0
0                  ZONE NO.     1

  CELL PLANE  M =     1
  C =   9.2428601E-01  CZ =   9.6111101E-01  CT =  -1.4103631E-02   VX =   9.98382628E-01  5.88638149E-02  0.00000000E+00 ISUR  3
  B =   5.0000000E-01  BZ =   0.0000000E+00  BT =   0.0000000E+00   VX =   0.00000000E+00  0.00000000E+00  0.00000000E+00 ISUR  1

  N            S            T            P            D            U            V            W            E            M
 36.5  9.183931E-01  4.363323E-02  4.569594E+05  5.837047E-01  3.420235E+03 -6.810439E+01  4.064138E+03  8.944247E+03  5.566885E+00
 31.5  8.594645E-01  4.363323E-02  3.205568E+05  3.193162E-01  3.086448E+03 -6.608672E+01  3.954461E+03  9.694987E+03  4.497383E+00
 25.5  7.887502E-01  4.363323E-02  2.315177E+05  1.857429E-01  2.625004E+03 -6.278110E+01  3.769571E+03  1.027318E+04  3.700651E+00
 19.5  7.180359E-01  4.363323E-02  1.763107E+05  1.240225E-01  2.177979E+03 -6.071832E+01  3.693437E+03  1.063360E+04  3.276337E+00
 13.5  6.473215E-01  4.363323E-02  1.326544E+05  8.663950E-02  1.755453E+03 -6.044731E+01  3.731761E+03  1.085489E+04  3.085242E+00
  7.5  5.766072E-01  4.363323E-02  9.207491E+04  5.894683E-02  1.183502E+03 -6.188703E+01  3.895451E+03  1.102903E+04  3.029335E+00
  1.5  5.058929E-01  4.363323E-02  4.508974E+04  3.114715E-02  1.251147E+02 -6.613063E+01  4.192732E+03  1.114449E+04  3.218029E+00

  CELL PLANE  M =    12
  C =   8.0421042E-01  CZ =   7.2419882E-01  CT =  -1.7878149E-01   VX =   3.49807858E-01  9.62836862E-01  0.00000000E+00 ISUR  3
  B =   5.0000000E-01  BZ =   0.0000000E+00  BT =   0.0000000E+00   VX =   0.00000000E+00  0.00000000E+00  0.00000000E+00 ISUR  1

  N            S            T            P            D            U            V            W            E            M
 36.5  7.999853E-01  1.003564E+00  5.131466E+05  6.080638E-01  2.840198E+03 -1.297386E+03  4.212109E+03  9.046637E+03  5.323775E+00
 31.5  7.577338E-01  1.003564E+00  3.681330E+05  3.492402E-01  2.517548E+03 -1.247642E+03  4.068437E+03  9.747701E+03  4.321056E+00
 25.5  7.070321E-01  1.003564E+00  2.704453E+05  2.103579E-01  2.101715E+03 -1.176383E+03  3.844306E+03  1.030159E+04  3.586752E+00
 19.5  6.563303E-01  1.003564E+00  2.076475E+05  1.393267E-01  1.727978E+03 -1.134454E+03  3.652021E+03  1.064846E+04  3.157021E+00
 13.5  6.056286E-01  1.003564E+00  1.596352E+05  1.019252E-01  1.320608E+03 -1.110360E+03  3.704460E+03  1.083014E+04  3.029101E+00
  7.5  5.549269E-01  1.003564E+00  1.144051E+05  7.027075E-02  8.647255E+02 -1.130109E+03  3.724623E+03  1.103635E+04  2.916554E+00
  1.5  5.042251E-01  1.003564E+00  6.346638E+04  4.107080E-02  8.559204E+01 -1.185570E+03  3.904660E+03  1.114655E+04  3.053542E+00

  CELL PLANE  M =    24
  C =   6.5663689E-01  CZ =   4.2421091E-01  CT =  -8.9929581E-02   VX =  -5.83229065E-01  8.23772132E-01  0.00000000E+00 ISUR  3
  B =   5.0000000E-01  BZ =   0.0000000E+00  BT =   0.0000000E+00   VX =   0.00000000E+00  0.00000000E+00  0.00000000E+00 ISUR  1

  N            S            T            P            D            U            V            W            E            M
 36.5  6.544614E-01  2.050762E+00  8.017663E+05  7.269682E-01  1.625465E+03 -1.421870E+03  4.392387E+03  9.486033E+03  4.264193E+00
 31.5  6.327063E-01  2.050762E+00  6.380416E+05  4.893899E-01  1.398019E+03 -1.337128E+03  4.126717E+03  9.991312E+03  3.595501E+00
 25.5  6.066001E-01  2.050762E+00  5.134731E+05  3.350902E-01  1.131219E+03 -1.243218E+03  3.843002E+03  1.037733E+04  3.103972E+00
 19.5  5.804939E-01  2.050762E+00  4.257402E+05  2.540733E-01  8.791566E+02 -1.165272E+03  3.695823E+03  1.060195E+04  2.856104E+00
 13.5  5.543878E-01  2.050762E+00  3.558261E+05  1.951924E-01  6.298855E+02 -1.110004E+03  3.496295E+03  1.086138E+04  2.584120E+00
  7.5  5.282817E-01  2.050762E+00  2.930691E+05  1.543802E-01  3.676338E+02 -1.075683E+03  3.380723E+03  1.104831E+04  2.431878E+00
  1.5  5.021755E-01  2.050762E+00  2.283814E+05  1.193118E-01  3.169659E+01 -1.063594E+03  3.345056E+03  1.117764E+04  2.384751E+00

  CELL PLANE  M =    36
  C =   6.1062628E-01  CZ =   3.1725460E-01  CT =  -3.0756728E-03   VX =  -9.99267936E-01  3.85871679E-02  0.00000000E+00 ISUR  3
  B =   5.0000000E-01  BZ =   0.0000000E+00  BT =   0.0000000E+00   VX =   0.00000000E+00  0.00000000E+00  0.00000000E+00 ISUR  1

  N            S            T            P            D            U            V            W            E            M
 36.5  6.090898E-01  3.097960E+00  1.001066E+06  7.911978E-01  1.015618E+03 -7.184073E+01  4.530247E+03  9.748788E+03  3.726900E+00
 31.5  5.937250E-01  3.097960E+00  8.427879E+05  5.766953E-01  8.569534E+02 -6.715912E+01  4.234202E+03  1.012967E+04  3.234094E+00
 25.5  5.752873E-01  3.097960E+00  7.142076E+05  4.225185E-01  6.753306E+02 -6.189426E+01  3.917321E+03  1.053936E+04  2.778456E+00
 19.5  5.568496E-01  3.097960E+00  6.189971E+05  3.329672E-01  5.127166E+02 -5.783103E+01  3.659011E+03  1.068942E+04  2.538745E+00
 13.5  5.384119E-01  3.097960E+00  5.424189E+05  2.737695E-01  3.501100E+02 -5.409221E+01  3.431850E+03  1.090889E+04  2.302670E+00
  7.5  5.199742E-01  3.097960E+00  4.744309E+05  2.314432E-01  1.911973E+02 -5.126116E+01  3.260924E+03  1.106457E+04  2.144908E+00
  1.5  5.015365E-01  3.097960E+00  4.084078E+05  1.951976E-01  1.528248E+01 -4.934645E+01  3.132501E+03  1.119398E+04  2.035921E+00
```

```
 SECANT METHOD IN DECODE DID NOT CONVERGE FOR M,N     1   34
 SECANT METHOD IN DECODE DID NOT CONVERGE FOR M,N     2   34
OSTEP =    20  ZETA =   6.10449910E-01  DZETA =   6.26837742E-03  NCFL,MCFL =     1   35
 SECANT METHOD IN DECODE DID NOT CONVERGE FOR M,N    14   35
 SECANT METHOD IN DECODE DID NOT CONVERGE FOR M,N    17   36
OSTEP =    30  ZETA =   6.77150786E-01  DZETA =   7.00617116E-03  NCFL,MCFL =     1   35
 SECANT METHOD IN DECODE DID NOT CONVERGE FOR M,N    15   34
 SECANT METHOD IN DECODE DID NOT CONVERGE FOR M,N    18   36
OSTEP =    40  ZETA =   7.51731277E-01  DZETA =   7.77146500E-03  NCFL,MCFL =     1   36
 SECANT METHOD IN DECODE DID NOT CONVERGE FOR M,N    18   34
 SECANT METHOD IN DECODE DID NOT CONVERGE FOR M,N    20   35
OSTEP =    50  ZETA =   8.33479047E-01  DZETA =   8.54412373E-03  NCFL,MCFL =     1   35
 SECANT METHOD IN DECODE DID NOT CONVERGE FOR M,N    29   36
 SECANT METHOD IN DECODE DID NOT CONVERGE FOR M,N    32   35
OSTEP =    60  ZETA =   9.22998130E-01  DZETA =   9.22467839E-03  NCFL,MCFL =     1   36
 SECANT METHOD IN DECODE DID NOT CONVERGE FOR M,N    27   34
 SECANT METHOD IN DECODE DID NOT CONVERGE FOR M,N    28   34
OSTEP =    70  ZETA =   1.01756394E+00  DZETA =   9.61779151E-03  NCFL,MCFL =     1   36
OSTEP =    80  ZETA =   1.11583364E+00  DZETA =   1.00026354E-02  NCFL,MCFL =     1   35
OSTEP =    90  ZETA =   1.21771550E+00  DZETA =   1.03135379E-02  NCFL,MCFL =     1   36
OSTEP =   100  ZETA =   1.32186139E+00  DZETA =   1.04742153E-02  NCFL,MCFL =     1   36
OSTEP =   110  ZETA =   1.42711949E+00  DZETA =   1.05639528E-02  NCFL,MCFL =     1   35
OSTEP =   120  ZETA =   1.53316963E+00  DZETA =   1.06327394E-02  NCFL,MCFL =     1   35
OSTEP =   130  ZETA =   1.63970387E+00  DZETA =   1.06570804E-02  NCFL,MCFL =     1   36
OSTEP =   140  ZETA =   1.74617064E+00  DZETA =   1.06357168E-02  NCFL,MCFL =     1   35
OSTEP =   150  ZETA =   1.85228038E+00  DZETA =   1.05827358E-02  NCFL,MCFL =     1   35
OSTEP =   160  ZETA =   1.95765221E+00  DZETA =   1.04967644E-02  NCFL,MCFL =     1   35
OSTEP =   170  ZETA =   2.06214452E+00  DZETA =   1.04126129E-02  NCFL,MCFL =     1   35
OSTEP =   180  ZETA =   2.16567969E+00  DZETA =   1.02975955E-02  NCFL,MCFL =     1   35
OSTEP =   190  ZETA =   2.26793265E+00  DZETA =   1.01717506E-02  NCFL,MCFL =     1   35
OSTEP =   200  ZETA =   2.36898994E+00  DZETA =   1.00452183E-02  NCFL,MCFL =     1   36
OSTEP =   210  ZETA =   2.46855021E+00  DZETA =   9.88018699E-03  NCFL,MCFL =     1   36
OSTEP =   220  ZETA =   2.56648564E+00  DZETA =   9.71829426E-03  NCFL,MCFL =     1   36
OSTEP =   230  ZETA =   2.66279626E+00  DZETA =   9.56043880E-03  NCFL,MCFL =     1   35
OSTEP =   240  ZETA =   2.75750709E+00  DZETA =   9.39748995E-03  NCFL,MCFL =     1   36
OSTEP =   250  ZETA =   2.85059977E+00  DZETA =   9.24461149E-03  NCFL,MCFL =     1   36
OSTEP =   260  ZETA =   2.94215298E+00  DZETA =   9.08483285E-03  NCFL,MCFL =     1   36
OSTEP =   270  ZETA =   3.03217936E+00  DZETA =   8.93738307E-03  NCFL,MCFL =     1   36
OSTEP =   280  ZETA =   3.12084389E+00  DZETA =   8.81141145E-03  NCFL,MCFL =     1   36
OSTEP =   290  ZETA =   3.20843863E+00  DZETA =   8.72045569E-03  NCFL,MCFL =     1   36
OSTEP =   300  ZETA =   3.29529333E+00  DZETA =   8.66061728E-03  NCFL,MCFL =     1   36
OSTEP =   310  ZETA =   3.38171387E+00  DZETA =   8.62895790E-03  NCFL,MCFL =     1   36
OSTEP =   320  ZETA =   3.46789980E+00  DZETA =   8.60986672E-03  NCFL,MCFL =     1   36
OSTEP =   330  ZETA =   3.55392647E+00  DZETA =   8.59935209E-03  NCFL,MCFL =     1   36
OSTEP =   340  ZETA =   3.63992476E+00  DZETA =   8.59925617E-03  NCFL,MCFL =     1   36
OSTEP =   350  ZETA =   3.72585368E+00  DZETA =   8.60059541E-03  NCFL,MCFL =     1   36
OSTEP =   360  ZETA =   3.81194711E+00  DZETA =   8.63548182E-03  NCFL,MCFL =     1   36
OSTEP =   370  ZETA =   3.89869714E+00  DZETA =   8.72740336E-03  NCFL,MCFL =     1   36
OSTEP =   380  ZETA =   3.98677015E+00  DZETA =   8.88944138E-03  NCFL,MCFL =     1   36
 SECANT METHOD IN DECODE DID NOT CONVERGE FOR M,N    36    7
OSTEP =   390  ZETA =   4.07670307E+00  DZETA =   9.08970740E-03  NCFL,MCFL =     1   36
 SECANT METHOD IN DECODE DID NOT CONVERGE FOR M,N    36    7
OSTEP =   400  ZETA =   4.16891718E+00  DZETA =   9.32839606E-03  NCFL,MCFL =     1   36
OSTEP =   410  ZETA =   4.26368237E+00  DZETA =   9.58875287E-03  NCFL,MCFL =     1   36
 SECANT METHOD IN DECODE DID NOT CONVERGE FOR M,N    35    6
 SECANT METHOD IN DECODE DID NOT CONVERGE FOR M,N    36    6
OSTEP =   420  ZETA =   4.36092186E+00  DZETA =   9.82640963E-03  NCFL,MCFL =     1   36
OSTEP =   430  ZETA =   4.46059608E+00  DZETA =   1.00939022E-02  NCFL,MCFL =     1   36
OSTEP =   440  ZETA =   4.56333208E+00  DZETA =   1.04226097E-02  NCFL,MCFL =     1   36
OSTEP =   450  ZETA =   4.66950130E+00  DZETA =   1.07863303E-02  NCFL,MCFL =     1   36
 SECANT METHOD IN DECODE DID NOT CONVERGE FOR M,N    35    5
 SECANT METHOD IN DECODE DID NOT CONVERGE FOR M,N    35    5
 SECANT METHOD IN DECODE DID NOT CONVERGE FOR M,N    36    5
OSTEP =   460  ZETA =   4.77955532E+00  DZETA =   1.11917388E-02  NCFL,MCFL =     1   35
OSTEP =   470  ZETA =   4.89393473E+00  DZETA =   1.16407908E-02  NCFL,MCFL =     1   35
OSTEP =   480  ZETA =   5.01288700E+00  DZETA =   1.21093737E-02  NCFL,MCFL =     1   35
 SECANT METHOD IN DECODE DID NOT CONVERGE FOR M,N    35    4
 SECANT METHOD IN DECODE DID NOT CONVERGE FOR M,N    35    4
 SECANT METHOD IN DECODE DID NOT CONVERGE FOR M,N    35    4
 SECANT METHOD IN DECODE DID NOT CONVERGE FOR M,N    36    4
 SECANT METHOD IN DECODE DID NOT CONVERGE FOR M,N    36    4
OSTEP =   490  ZETA =   5.13669157E+00  DZETA =   1.26054632E-02  NCFL,MCFL =     1   35
OSTEP =   500  ZETA =   5.26547289E+00  DZETA =   1.31032886E-02  NCFL,MCFL =     1   35
1                    STEP =   500     ZETA =   5.2654729E+00     DZETA =   1.3103289E-02
                   MACH NO. =   2.0000000E+01     ALPHA =   2.0000000E+01     BETA =   0.0000000E+00
0
0                      ZONE NO.     1
0
   LEFT EDGE PLANE GEOMETRY
   N            X            Y            SG           SGZ          SGS          VE1          VE2          VE3          ISUR
  36.5  3.948509E+00  0.000000E+00  0.000000E+00  0.000000E+00  0.000000E+00  0.000000E+00  1.271564E-03  0.000000E+00   0
  31.5  3.462803E+00  0.000000E+00  0.000000E+00  0.000000E+00  0.000000E+00  0.000000E+00  1.271566E-03  0.000000E+00   0
  25.5  2.879957E+00  0.000000E+00  0.000000E+00  0.000000E+00  0.000000E+00  0.000000E+00  1.271563E-03  0.000000E+00   0
  19.5  2.297110E+00  0.000000E+00  0.000000E+00  0.000000E+00  0.000000E+00  0.000000E+00  1.271566E-03  0.000000E+00   0
  13.5  1.714264E+00  0.000000E+00  0.000000E+00  0.000000E+00  0.000000E+00  0.000000E+00  1.271566E-03  0.000000E+00   0
   7.5  1.131417E+00  0.000000E+00  0.000000E+00  0.000000E+00  0.000000E+00  0.000000E+00  1.271566E-03  0.000000E+00   0
   1.5  5.485706E-01  0.000000E+00  0.000000E+00  0.000000E+00  0.000000E+00  0.000000E+00  1.271565E-03  0.000000E+00   0
0
0   LEFT EDGE PLANE   CEF =  3.9970794E+00   BEF =  5.0000000E-01
   N            S            T            P            D            U            V            W            E            M
  36.5  3.948509E+00  0.000000E+00  5.273677E+04  3.019022E-01  2.569173E+03  0.000000E+00  5.224500E+03  7.728162E+03  1.217545E+01
```

```
 31.5  3.462803E+00  0.000000E+00  2.202334E+04  6.423993E-02  2.237354E+03  0.000000E+00  5.251650E+03  8.908890E+03  8.044763E+00
 25.5  2.879957E+00  0.000000E+00  2.501182E+04  3.115077E-02  2.041357E+03  0.000000E+00  4.868468E+03  1.001343E+04  5.368529E+00
 19.5  2.297110E+00  0.000000E+00  2.791483E+04  2.495513E-02  1.690490E+03  0.000000E+00  4.419418E+03  1.077295E+04  4.206345E+00
 13.5  1.714264E+00  0.000000E+00  3.215629E+04  2.529749E-02  1.317421E+03  0.000000E+00  4.251283E+03  1.104708E+04  3.571992E+00
  7.5  1.131417E+00  0.000000E+00  2.793257E+04  2.115690E-02  4.214730E+02  0.000000E+00  4.379603E+03  1.116279E+04  3.487218E+00
  1.5  5.485706E-01  0.000000E+00  1.920391E+04  1.518229E-02 -7.475690E+01  0.000000E+00  4.446773E+03  1.122167E+04  3.609775E+00

 CELL PLANE  M =     1
 C =   3.9970794E+00  CZ =   5.4630756E-01  CT =  -2.1438050E-01   VX =   4.53934819E-03  4.42986522E-04 -2.47700280E-03 ISUR  3
 B =   5.0000000E-01  BZ =   0.0000000E+00  BT =   0.0000000E+00   VX =   5.71013428E-04  2.49308396E-05  0.00000000E+00 ISUR  1

  N            S            T            P            D            U            V            W            E            M
 37.0  3.997079E+00  4.363323E-02  5.529878E+03  8.891485E-02  2.012553E+03 -8.786999E+01  5.534712E+03  7.379570E+03  2.025339E+01
 36.5  3.948509E+00  4.363323E-02  5.273540E+04  3.021779E-01  2.564426E+03 -5.788649E+01  5.226327E+03  7.726613E+03  1.218586E+01
 31.5  3.462803E+00  4.363323E-02  2.202091E+04  6.451037E-02  2.236015E+03 -6.924432E+01  5.252910E+03  8.903811E+03  8.060996E+00
 25.5  2.879957E+00  4.363323E-02  2.478445E+04  3.111924E-02  2.039936E+03 -5.978442E+01  4.874799E+03  9.999036E+03  5.393028E+00
 19.5  2.297110E+00  4.363323E-02  2.791492E+04  2.495840E-02  1.695213E+03 -5.701541E+01  4.420810E+03  1.077262E+04  4.209551E+00
 13.5  1.714264E+00  4.363323E-02  3.213380E+04  2.530545E-02  1.334913E+03 -7.568957E+01  4.256738E+03  1.104527E+04  3.582257E+00
  7.5  1.131417E+00  4.363323E-02  2.766521E+04  2.084335E-02  4.296613E+02 -8.523690E+01  4.363805E+03  1.117456E+04  3.469384E+00
  1.5  5.485706E-01  4.363323E-02  1.916898E+04  1.512489E-02 -7.183366E+01  4.609303E+01  4.446430E+03  1.122607E+04  3.606447E+00
  1.0  5.000000E-01  4.363323E-02  2.044163E+04  1.594067E-02  1.239777E-05  4.786615E+01  4.428868E+03  1.122467E+04  3.565625E+00

 CELL PLANE  M =    12
 C =   2.2698357E+00  CZ =   1.2464654E-01  CT =  -2.5217483E+00   VX =  -1.03046116E-03  3.73550295E-03 -3.23832966E-04 ISUR  3
 B =   5.0000000E-01  BZ =   0.0000000E+00  BT =   0.0000000E+00   VX =   3.07097391E-04  4.82046336E-04  0.00000000E+00 ISUR  1

  N            S            T            P            D            U            V            W            E            M
 37.0  2.269836E+00  1.003564E+00  5.529878E+03  8.891485E-02  1.082374E+03 -1.698987E+03  5.534712E+03  7.379570E+03  2.025339E+01
 36.5  2.245255E+00  1.003564E+00  6.943661E+04  3.561593E-01  1.576275E+03 -1.140037E+03  5.473394E+03  7.823369E+03  1.120743E+01
 31.5  1.999444E+00  1.003564E+00  4.758683E+04  1.962632E-01  1.448847E+03 -1.177382E+03  5.467701E+03  8.257305E+03  9.649740E+00
 25.5  1.704472E+00  1.003564E+00  3.610051E+04  1.003784E-01  1.336081E+03 -1.228663E+03  5.399285E+03  8.838265E+03  7.811549E+00
 19.5  1.409499E+00  1.003564E+00  3.073950E+04  5.858904E-02  1.256304E+03 -1.313848E+03  5.266307E+03  9.321718E+03  6.619675E+00
 13.5  1.114526E+00  1.003564E+00  2.595551E+04  3.752777E-02  1.218603E+03 -1.495716E+03  5.067339E+03  9.723487E+03  5.863513E+00
  7.5  8.195537E-01  1.003564E+00  1.878327E+04  2.367537E-02  1.191168E+03 -1.917458E+03  4.777876E+03  1.007396E+04  5.410516E+00
  1.5  5.245811E-01  1.003564E+00  4.965557E+03  6.155840E-03  4.426134E+02 -2.957131E+03  4.291173E+03  1.052813E+04  5.333321E+00
  1.0  5.000000E-01  1.003564E+00  2.435716E+03  3.271021E-03 -2.441406E-04 -3.032494E+03  4.359388E+03  1.055487E+04  5.635487E+00

 CELL PLANE  M =    24
 C =   7.7768797E-01  CZ =  -2.9416770E-02  CT =  -4.2291144E-01   VX =  -8.41408968E-04  5.68058749E-04  2.42916867E-05 ISUR  3
 B =   5.0000000E-01  BZ =   0.0000000E+00  BT =   0.0000000E+00   VX =  -2.63915746E-04  5.06977551E-04  0.00000000E+00 ISUR  1

  N            S            T            P            D            U            V            W            E            M
 37.0  7.776880E-01  2.050762E+00  5.529878E+03  8.891485E-02 -9.301791E+02 -1.786857E+03  5.534712E+03  7.379570E+03  2.025339E+01
 36.5  7.738312E-01  2.050762E+00  1.710458E+05  4.670250E-01  1.514464E+02 -1.186505E+03  5.565351E+03  8.221758E+03  8.294338E+00
 31.5  7.352634E-01  2.050762E+00  1.698592E+05  4.514147E-01  1.346068E+02 -1.131142E+03  5.569876E+03  8.252963E+03  8.190520E+00
 25.5  6.889821E-01  2.050762E+00  1.630559E+05  4.213221E-01  1.007591E+02 -1.070628E+03  5.574574E+03  8.294351E+03  8.086326E+00
 19.5  6.427008E-01  2.050762E+00  1.545377E+05  3.888446E-01  8.120139E+01 -1.044015E+03  5.570907E+03  8.589527E+03  7.288208E+00
 13.5  5.964195E-01  2.050762E+00  1.418794E+05  3.239850E-01  6.818683E+01 -1.079013E+03  5.533795E+03  8.727136E+03  6.979320E+00
  7.5  5.501381E-01  2.050762E+00  1.254745E+05  2.085441E-01  6.318884E+01 -1.264988E+03  5.360826E+03  9.134972E+03  6.098162E+00
  1.5  5.038568E-01  2.050762E+00  1.027455E+05  9.935740E-02  1.394836E+01 -1.780916E+03  4.613887E+03  1.012782E+04  4.445147E+00
  1.0  5.000000E-01  2.050762E+00  1.002207E+05  9.341722E-02 -3.051758E-04 -1.833005E+03  4.525642E+03  1.021808E+04  4.291087E+00

 CELL PLANE  M =    36
 C =   6.3154739E-01  CZ =   1.1087256E-02  CT =  -5.3487187E-03   VX =  -7.21694028E-04  2.53912494E-05 -8.01097121E-06 ISUR  3
 B =   5.0000000E-01  BZ =   0.0000000E+00  BT =   0.0000000E+00   VX =  -5.71013312E-04  2.49308396E-05  0.00000000E+00 ISUR  1

  N            S            T            P            D            U            V            W            E            M
 37.0  6.315474E-01  3.097960E+00  5.529878E+03  8.891485E-02 -2.012553E+03 -8.786978E+01  5.534712E+03  7.379570E+03  2.025339E+01
 36.5  6.297203E-01  3.097960E+00  3.182085E+05  5.426152E-01 -2.792198E+02 -7.145551E+01  5.513780E+03  8.616888E+03  6.546313E+00
 31.5  6.114499E-01  3.097960E+00  3.419219E+05  5.813736E-01 -2.039548E+02 -6.440948E+01  5.515732E+03  8.601406E+03  6.530947E+00
 25.5  5.895253E-01  3.097960E+00  3.500373E+05  6.174279E-01 -1.585223E+02 -5.546131E+01  5.534923E+03  8.547185E+03  6.652716E+00
 19.5  5.676007E-01  3.097960E+00  3.554863E+05  6.759090E-01 -1.214980E+02 -4.856411E+01  5.569305E+03  8.448100E+03  6.906699E+00
 13.5  5.456762E-01  3.097960E+00  3.590069E+05  6.875332E-01 -8.845501E+01 -4.616547E+01  5.573000E+03  8.436517E+03  6.931144E+00
  7.5  5.237516E-01  3.097960E+00  3.616938E+05  5.646593E-01 -5.514233E+01 -4.876560E+01  5.474557E+03  8.701936E+03  6.247940E+00
  1.5  5.018271E-01  3.097960E+00  3.622339E+05  3.185101E-01 -6.563226E+00 -6.632203E+01  4.838916E+03  9.903799E+03  4.080756E+00
  1.0  5.000000E-01  3.097960E+00  3.630869E+05  3.051126E-01  1.025200E-05 -6.835564E+01  4.759313E+03  9.997381E+03  3.927740E+00
0
0   RIGHT EDGE PLANE  CEF =   6.3154739E-01  BEF =   5.0000000E-01
  N            S            T            P            D            U            V            W            E            M
 36.5  6.297203E-01  3.141593E+00  3.201479E+05  5.444122E-01 -2.764165E+02  2.416652E-05  5.513451E+03  8.618904E+03  6.537652E+00
 31.5  6.114499E-01  3.141593E+00  3.431077E+05  5.824809E-01 -2.003571E+02  1.751680E-05  5.515789E+03  8.602415E+03  6.527291E+00
 25.5  5.895253E-01  3.141593E+00  3.511046E+05  6.190424E-01 -1.544773E+02  1.350563E-05  5.535276E+03  8.546843E+03  6.651822E+00
 19.5  5.676007E-01  3.141593E+00  3.568815E+05  6.781964E-01 -1.177091E+02  1.029106E-05  5.569451E+03  8.447686E+03  6.904570E+00
 13.5  5.456762E-01  3.141593E+00  3.602058E+05  6.891600E-01 -8.521702E+01  7.450345E-06  5.572905E+03  8.436807E+03  6.927418E+00
  7.5  5.237516E-01  3.141593E+00  3.627357E+05  5.645319E-01 -5.252833E+01  4.592442E-06  5.473858E+03  8.705418E+03  6.238805E+00
  1.5  5.018271E-01  3.141593E+00  3.637703E+05  3.186427E-01 -2.869228E+00  2.508506E-07  4.833836E+03  9.910045E+03  4.069021E+00
0
   RIGHT EDGE PLANE GEOMETRY
  N            X            Y            TH           THZ          THS          VE1          VE2          VE3          ISUR
 36.5  6.297203E-01  3.141593E+00  3.141593E+00  0.000000E+00  0.000000E+00  4.183765E-12 -4.785408E-05  2.602085E-18   0
 31.5  6.114499E-01  3.141593E+00  3.141593E+00  0.000000E+00  0.000000E+00  4.183789E-12 -4.785408E-05  1.084202E-19   0
 25.5  5.895253E-01  3.141593E+00  3.141593E+00  0.000000E+00  0.000000E+00  4.183765E-12 -4.785408E-05 -6.396793E-18   0
 19.5  5.676007E-01  3.141593E+00  3.141593E+00  0.000000E+00  0.000000E+00  4.183742E-12 -4.785369E-05  3.848918E-18   0
 13.5  5.456762E-01  3.141593E+00  3.141593E+00  0.000000E+00  0.000000E+00  4.183765E-12 -4.785408E-05  9.215718E-19   0
  7.5  5.237516E-01  3.141593E+00  3.141593E+00  0.000000E+00  0.000000E+00  4.183812E-12 -4.785408E-05  1.246832E-18   0
  1.5  5.018271E-01  3.141593E+00  3.141593E+00  0.000000E+00  0.000000E+00  4.183812E-12 -4.785446E-05  4.770490E-18   0
0STEP =   510  ZETA =   5.39954615E+00  DZETA =   1.36473980E-02  NCFL,MCFL =    1   35
0STEP =   520  ZETA =   5.53909492E+00  DZETA =   1.42097995E-02  NCFL,MCFL =    1   35
0STEP =   530  ZETA =   5.68428564E+00  DZETA =   1.47799272E-02  NCFL,MCFL =    1   35
0STEP =   540  ZETA =   5.83527756E+00  DZETA =   1.53615372E-02  NCFL,MCFL =    1   35
0STEP =   550  ZETA =   5.99135590E+00  DZETA =   1.57251675E-02  NCFL,MCFL =   36   35
```

```
0STEP -   560  ZETA -   6.14980888E+00  DZETA -   1.59400385E-02  NCFL,MCFL -    36   35
0STEP -   570  ZETA -   6.31033754E+00  DZETA -   1.61408186E-02  NCFL,MCFL -    36   35
0STEP -   580  ZETA -   6.47278452E+00  DZETA -   1.63221005E-02  NCFL,MCFL -    36   35
0STEP -   590  ZETA -   6.63692427E+00  DZETA -   1.64844971E-02  NCFL,MCFL -    36   35
0STEP -   600  ZETA -   6.80253077E+00  DZETA -   1.66177899E-02  NCFL,MCFL -    36   35
0STEP -   610  ZETA -   6.96941757E+00  DZETA -   1.67439282E-02  NCFL,MCFL -    36   35
0STEP -   620  ZETA -   7.13750696E+00  DZETA -   1.68575849E-02  NCFL,MCFL -    36   35
0STEP -   630  ZETA -   7.30665827E+00  DZETA -   1.69603694E-02  NCFL,MCFL -    36   35
0STEP -   640  ZETA -   7.47673845E+00  DZETA -   1.70457773E-02  NCFL,MCFL -    36   35
0STEP -   650  ZETA -   7.64765215E+00  DZETA -   1.71293113E-02  NCFL,MCFL -    36   35
0STEP -   660  ZETA -   7.81940603E+00  DZETA -   1.72100961E-02  NCFL,MCFL -    36   35
0STEP -   670  ZETA -   7.99185705E+00  DZETA -   1.72719564E-02  NCFL,MCFL -    36   35
0STEP -   680  ZETA -   8.16499519E+00  DZETA -   1.73444562E-02  NCFL,MCFL -    36   35
0STEP -   690  ZETA -   8.33881378E+00  DZETA -   1.74126029E-02  NCFL,MCFL -    36   35
0STEP -   700  ZETA -   8.51332664E+00  DZETA -   1.74790341E-02  NCFL,MCFL -    36   35
0STEP -   710  ZETA -   8.68850803E+00  DZETA -   1.75497290E-02  NCFL,MCFL -    36   35
0STEP -   720  ZETA -   8.86436749E+00  DZETA -   1.76208410E-02  NCFL,MCFL -    36   35
0STEP -   730  ZETA -   9.04093361E+00  DZETA -   1.76907927E-02  NCFL,MCFL -    36   35
0STEP -   740  ZETA -   9.21816254E+00  DZETA -   1.77549366E-02  NCFL,MCFL -    36   35
0STEP -   750  ZETA -   9.39608288E+00  DZETA -   1.78225134E-02  NCFL,MCFL -    36   35
0STEP -   760  ZETA -   9.57468128E+00  DZETA -   1.78908873E-02  NCFL,MCFL -    36   35
0STEP -   770  ZETA -   9.75395012E+00  DZETA -   1.79551002E-02  NCFL,MCFL -    36   35
0STEP -   780  ZETA -   9.93386841E+00  DZETA -   1.80215687E-02  NCFL,MCFL -    36   35
1                    STEP -   784     ZETA -   1.0000000E+01     DZETA -   1.2024879E-02
                   MACH NO. -   2.0000000E+01     ALPHA -   2.0000000E+01     BETA -   0.0000000E+00
0
0                     ZONE NO.     1
0
   LEFT EDGE PLANE GEOMETRY
   N          X          Y          SG         SG2        SGS        VE1        VE2        VE3        ISUR
  36.5  6.369873E+00  0.000000E+00  0.000000E+00  0.000000E+00  0.000000E+00  0.000000E+00  1.987295E-03  0.000000E+00   0
  31.5  5.543130E+00  0.000000E+00  0.000000E+00  0.000000E+00  0.000000E+00  0.000000E+00  1.987295E-03  0.000000E+00   0
  25.5  4.551040E+00  0.000000E+00  0.000000E+00  0.000000E+00  0.000000E+00  0.000000E+00  1.987290E-03  0.000000E+00   0
  19.5  3.558948E+00  0.000000E+00  0.000000E+00  0.000000E+00  0.000000E+00  0.000000E+00  1.987295E-03  0.000000E+00   0
  13.5  2.566857E+00  0.000000E+00  0.000000E+00  0.000000E+00  0.000000E+00  0.000000E+00  1.987297E-03  0.000000E+00   0
   7.5  1.574766E+00  0.000000E+00  0.000000E+00  0.000000E+00  0.000000E+00  0.000000E+00  1.987296E-03  0.000000E+00   0
   1.5  5.826743E-01  0.000000E+00  0.000000E+00  0.000000E+00  0.000000E+00  0.000000E+00  1.987295E-03  0.000000E+00   0
0
0   LEFT EDGE PLANE  CEF -  6.4525476E+00  BEF -  5.0000000E-01
   N          S          T          P          D          U          V          W          E          M
  36.5  6.369873E+00  0.000000E+00  2.835976E+04  2.326600E-01  2.399441E+03  0.000000E+00  5.340361E+03  7.583657E+03  1.429512E+01
  31.5  5.543130E+00  0.000000E 00  1.712667E+04  6.258249E-02  2.263378E+03  0.000000E+00  5.291910E+03  8.699800E+03  9.044283E+00
  25.5  4.551040E+00  0.000000E+00  1.625102E+04  1.801091E-02  1.910288E+03  0.000000E+00  4.723252E+03  1.042361E+04  4.945440E+00
  19.5  3.558948E+00  0.000000E+00  1.535448E+04  1.386239E-02  1.593242E+03  0.000000E+00  4.459707E+03  1.097202E+04  4.303402E+00
  13.5  2.566857E+00  0.000000E+00  1.477381E+04  1.272523E-02  9.965613E+02  0.000000E+00  4.525190E+03  1.110420E+04  4.104843E+00
   7.5  1.574766E+00  0.000000E+00  1.236026E+04  1.036081E-02 -7.418800E+01  0.000000E+00  4.596021E+03  1.124411E+04  4.005785E+00
   1.5  5.826743E-01  0.000000E+00  1.136822E+04  9.580553E-03 -1.492610E+00  0.000000E+00  4.565692E+03  1.126121E+04  4.016198E+00

   CELL PLANE  M -     1
   C -   6.4525476E+00  CZ -   4.9833539E-01  CT -  -4.4835544E-01   VX -   6.71839295E-03  7.63475779E-04 -3.34365666E-03 ISUR  3
   B -   5.0000000E-01  BZ -   0.0000000E+00  BT -   0.0000000E+00   VX -   5.24018658E-04  2.28790159E-05  0.00000000E+00 ISUR  1

   N          S          T          P          D          U          V          W          E          M
  37.0  6.452548E+00  4.363323E-02  5.529878E+03  8.891485E-02  2.012553E+03 -8.786999E+01  5.534712E+03  7.379570E+03  2.025339E+01
  36.5  6.369873E+00  4.363323E-02  2.843150E+04  2.328795E-01  2.395420E+03 -6.075201E+01  5.341506E+03  7.584509E+03  1.428369E+01
  31.5  5.543130E+00  4.363323E-02  1.712721E+04  6.306680E-02  2.257681E+03 -6.177565E+01  5.296678E+03  8.690151E+03  9.083074E+00
  25.5  4.551040E+00  4.363323E-02  1.633682E+04  1.809420E-02  1.916805E+03 -5.579166E+01  4.723445E+03  1.042350E+04  4.947368E+00
  19.5  3.558948E+00  4.363323E-02  1.541495E+04  1.409267E-02  1.607132E+03 -5.958138E+01  4.463837E+03  1.093974E+04  4.331780E+00
  13.5  2.566857E+00  4.363323E-02  1.506393E+04  1.350154E-02  1.110398E+03 -1.128655E+02  4.570978E+03  1.099703E+04  4.264982E+00
   7.5  1.574766E+00  4.363323E-02  1.229905E+04  1.056915E-02  2.377518E+02 -9.104774E+00  4.602365E+03  1.117967E+04  4.104311E+00
   1.5  5.826743E-01  4.363323E-02  1.133518E+04  9.577113E-03  3.455939E-01  6.543094E+00  4.566873E+03  1.125551E+04  4.026333E+00
   1.0  5.000000E-01  4.363323E-02  1.151925E+04  9.710311E-03  2.801418E-06  1.073677E-01  4.562448E+03  1.125556E+04  4.011530E+00

   CELL PLANE  M -    12
   C -   2.1922967E+00  CZ -  -1.3917419E-01  CT -  -5.4829402E+00   VX -  -3.58463288E-03  5.07450337E-03  2.28501856E-04 ISUR  3
   B -   5.0000000E-01  BZ -   0.0000000E+00  BT -   0.0000000E+00   VX -   2.81823071E-04  4.42373625E-04  0.00000000E+00 ISUR  1

   N          S          T          P          D          U          V          W          E          M
  37.0  2.192297E+00  1.003564E+00  5.529878E+03  8.891485E-02  1.082374E+03 -1.698987E+03  5.534712E+03  7.379570E+03  2.025339E+01
  36.5  2.168793E+00  1.003564E+00  5.379106E+04  3.079025E-01  1.327001E+03 -1.101241E+03  5.560495E+03  7.722196E+03  1.217836E+01
  31.5  1.933751E+00  1.003564E+00  5.734669E+04  2.925380E-01  1.328432E+03 -1.074552E+03  5.551104E+03  7.888898E+03  1.114894E+01
  25.5  1.651702E+00  1.003564E+00  4.884989E+04  2.216371E-01  1.254504E+03 -1.094788E+03  5.547774E+03  8.113352E+03  1.026252E+01
  19.5  1.369653E+00  1.003564E+00  4.051941E+04  1.616060E-01  1.134498E+03 -1.114193E+03  5.548768E+03  8.348363E+03  9.459097E+00
  13.5  1.087603E+00  1.003564E+00  3.157511E+04  1.177420E-01  9.766517E+02 -1.152951E+03  5.558644E+03  8.506893E+03  9.108573E+00
   7.5  8.055536E-01  1.003564E+00  2.113138E+04  8.006677E-02  7.888049E+02 -1.278627E+03  5.564006E+03  8.596039E+03  9.214929E+00
   1.5  5.235041E-01  1.003564E+00  4.487952E+03  1.573135E-02  2.863460E+02 -1.909607E+03  5.414955E+03  9.114477E+03  8.945442E+00
   1.0  5.000000E-01  1.003564E+00  2.017152E+03  7.307110E-03 -6.103516E-05 -1.955887E+03  5.426243E+03  9.294407E+03  9.165657E+00

   CELL PLANE  M -    24
   C -   8.1506759E-01  CZ -   1.7268916E-03  CT -  -3.7919417E-01   VX -  -7.48510647E-04  5.77229075E-04 -4.47372440E-06 ISUR  3
   B -   5.0000000E-01  BZ -   0.0000000E+00  BT -   0.0000000E+00   VX -  -2.42195310E-04  4.65252990E-04  0.00000000E+00 ISUR  1

   N          S          T          P          D          U          V          W          E          M
  37.0  8.150676E-01  2.050762E+00  5.529878E+03  8.891485E-02 -9.301791E+02 -1.786857E+03  5.534712E+03  7.379570E+03  2.025339E+01
  36.5  8.106917E-01  2.050762E+00  1.871800E+05  4.677424E-01  2.484109E+02 -1.224342E+03  5.528264E+03  8.295788E+03  7.945295E+00
  31.5  7.669322E-01  2.050762E+00  1.818370E+05  4.318679E-01  2.333861E+02 -1.164260E+03  5.525999E+03  8.360540E+03  7.757398E+00
  25.5  7.144210E-01  2.050762E+00  1.680170E+05  3.795747E-01  1.916971E+02 -1.092590E+03  5.524593E+03  8.697998E+03  6.925679E+00
  19.5  6.619097E-01  2.050762E+00  1.532687E+05  3.372666E-01  1.533927E+02 -1.042682E+03  5.521814E+03  8.763992E+03  6.815301E+00
  13.5  6.093985E-01  2.050762E+00  1.419970E+05  3.010550E-01  1.223891E+02 -1.029058E+03  5.516377E+03  8.814532E+03  6.754023E+00
   7.5  5.568872E-01  2.050762E+00  1.253541E+05  2.745954E-01  8.102298E+01 -1.034079E+03  5.527946E+03  8.806996E+03  6.866468E+00
   1.5  5.043759E-01  2.050762E+00  1.019108E+05  2.181150E-01  9.391754E+00 -1.133734E+03  5.500610E+03  8.885802E+03  6.821244E+00
```

```
  1.0  5.000000E-01  2.050762E+00  9.935689E+04  2.111421E-01 -1.831055E-04 -1.145961E+03  5.496159E+03  8.900356E+03  6.804149E+00

  CELL PLANE  M =    36
  C =   6.5807253E-01  CZ =   2.7095687E-03  CT =  -7.1115894E-03   VX =  -6.90316549E-04  2.26822704E-05 -1.97892587E-06 ISUR  3
  B =   5.0000000E-01  BZ =   0.0000000E+00  BT =   0.0000000E+00   VX =  -5.24018542E-04  2.28790159E-05  0.00000000E+00 ISUR  1

  N            S            T            P            D            U            V            W            E            M
 37.0  6.580725E-01  3.097960E+00  5.529878E+03  8.891485E-02 -2.012553E+03 -8.786978E+01  5.534712E+03  7.379570E+03  2.025339E+01
 36.5  6.558771E-01  3.097960E+00  3.045827E+05  5.367669E-01 -3.203971E+02 -6.794724E+01  5.527374E+03  8.585774E+03  6.658715E+00
 31.5  6.339226E-01  3.097960E+00  3.250288E+05  5.640563E-01 -2.469801E+02 -6.106860E+01  5.523912E+03  8.588305E+03  6.603658E+00
 25.5  6.075771E-01  3.097960E+00  3.315201E+05  5.722141E-01 -1.981648E+02 -5.440464E+01  5.523361E+03  8.590006E+03  6.584314E+00
 19.5  5.812317E-01  3.097960E+00  3.363574E+05  5.780598E-01 -1.521657E+02 -4.991786E+01  5.522771E+03  8.591692E+03  6.569045E+00
 13.5  5.548863E-01  3.097960E+00  3.401503E+05  5.709958E-01 -1.059386E+02 -4.737104E+01  5.519175E+03  8.601271E+03  6.535852E+00
  7.5  5.285408E-01  3.097960E+00  3.427994E+05  5.818673E-01 -5.765707E+01 -4.623574E+01  5.518505E+03  8.602950E+03  6.526002E+00
  1.5  5.021955E-01  3.097960E+00  3.441940E+05  5.712519E-01 -5.029838E+00 -4.718049E+01  5.507557E+03  8.631653E+03  6.451591E+00
  1.0  5.000000E-01  3.097960E+00  3.442662E+05  5.690289E-01  7.152557E-06 -4.732533E+01  5.505655E+03  8.637185E+03  6.438723E+00
0
0   RIGHT EDGE PLANE  CEF =   6.5807253E-01  BEF =   5.0000000E-01
  N            S            T            P            D            U            V            W            E            M
 36.5  6.558771E-01  3.141593E+00  3.059876E+05  5.380911E-01 -3.180764E+02  2.780875E-05  5.527134E+03  8.587212E+03  6.652566E+00
 31.5  6.339226E-01  3.141593E+00  3.262401E+05  5.651340E-01 -2.436019E+02  2.129760E-05  5.523849E+03  8.589589E+03  6.597500E+00
 25.5  6.075771E-01  3.141593E+00  3.327498E+05  5.734701E-01 -1.940851E+02  1.696846E-05  5.523282E+03  8.590962E+03  6.579158E+00
 19.5  5.812317E-01  3.141593E+00  3.374402E+05  5.793388E-01 -1.482357E+02  1.295994E-05  5.522747E+03  8.592255E+03  6.564567E+00
 13.5  5.548863E-01  3.141593E+00  3.413332E+05  5.803013E-01 -1.021664E+02  8.932198E-06  5.519071E+03  8.601974E+03  6.532262E+00
  7.5  5.285408E-01  3.141593E+00  3.439713E+05  5.834245E-01 -5.441161E+01  4.757093E-06  5.518532E+03  8.602936E+03  6.523524E+00
  1.5  5.021955E-01  3.141593E+00  3.452419E+05  5.720574E-01 -2.981076E+00  2.606293E-07  5.507153E+03  8.633156E+03  6.446509E+00
0
  RIGHT EDGE PLANE GEOMETRY
  N            X            Y            TH           TH2          THS          VE1          VE2          VE3          ISUR
 36.5  6.558771E-01  3.141593E+00  3.141593E+00  0.000000E+00  0.000000E+00  4.615678E-12 -5.279425E-05  4.770490E-18   0
 31.5  6.339226E-01  3.141593E+00  3.141593E+00  0.000000E+00  0.000000E+00  4.615721E-12 -5.279461E-05 -4.770490E-18   0
 25.5  6.075771E-01  3.141593E+00  3.141593E+00  0.000000E+00  0.000000E+00  4.615700E-12 -5.279425E-05  1.843144E-18   0
 19.5  5.812317E-01  3.141593E+00  3.141593E+00  0.000000E+00  0.000000E+00  4.615721E-12 -5.279461E-05  1.084202E-19   0
 13.5  5.548863E-01  3.141593E+00  3.141593E+00  0.000000E+00  0.000000E+00  4.615743E-12 -5.279461E-05  2.493665E-18   0
  7.5  5.285408E-01  3.141593E+00  3.141593E+00  0.000000E+00  0.000000E+00  4.615678E-12 -5.279425E-05 -6.559423E-18   0
  1.5  5.021955E-01  3.141593E+00  3.141593E+00  0.000000E+00  0.000000E+00  4.615700E-12 -5.279425E-05 -4.174178E-18   0
1    ZONE =  1    EDGE =  1    MACH NO. =  20.000    ANGLE OF ATTACK =   20.000    YAW ANGLE =    0.000
                                   S U R F A C E   P R E S S U R E S
OSTEP   ZETA        1            2            3            4            5            6            7            8            9           10
   1    0.502   4.029E+04S   4.030E+04S   4.031E+04S   4.033E+04S   4.035E+04S   4.037E+04S   4.041E+04S   4.043E+04S   5.814E+04S   5.824E+04S
  40    0.748   3.677E+04S   3.672E+04S   3.660E+04S   3.691E+04S   3.787E+04S   3.867E+04S   3.850E+04S   3.930E+04S   4.577E+04S   4.919E+04S
  80    1.111   3.792E+04S   3.834E+04S   3.864E+04S   3.817E+04S   3.678E+04S   3.478E+04S   3.205E+04S   3.225E+04S   3.454E+04S   3.554E+04S
 600    6.794   1.565E+04S   1.530E+04S   1.479E+04S   1.457E+04S   1.435E+04S   1.408E+04S   1.151E+04S   2.120E+03S   3.729E+02S   7.667E+02S
 640    7.468   1.346E+04S   1.321E+04S   1.316E+04S   1.323E+04S   1.319E+04S   1.297E+04S   8.017E+03S   9.410E+02S   2.790E+02S   6.699E+02S
 680    8.156   1.218E+04S   1.217E+04S   1.220E+04S   1.229E+04S   1.220E+04S   1.160E+04S   4.900E+03S   1.752E+02S   4.009E+02S   6.930E+02S
 720    8.856   1.184E+04S   1.177E+04S   1.182E+04S   1.166E+04S   1.171E+04S   7.760E+03S   1.666E+03S   1.867E+02S   3.918E+02S   6.748E+02S
 760    9.566   1.172E+04S   1.170E+04S   1.161E+04S   1.135E+04S   9.881E+03S   4.268E+03S   1.313E+02S   1.532E+02S   3.683E+02S   6.382E+02S
 784    9.994   1.152E+04S   1.140E+04S   1.121E+04S   1.094E+04S   8.188E+03S   2.742E+03S   6.873E+01S   1.689E+02S   3.166E+02S   6.126E+02S
1    ZONE =  1    EDGE =  1    MACH NO. =  20.000    ANGLE OF ATTACK =   20.000    YAW ANGLE =    0.000
                                   S U R F A C E   P R E S S U R E S
OSTEP   ZETA       11           12           13           14           15           16           17           18           19           20
   1    0.502   5.831E+04S   5.836E+04S   8.314E+04S   8.329E+04S   8.334E+04S   1.165E+05S   1.167E+05S   1.169E+05S   1.609E+05S   1.612E+05S
  40    0.748   5.102E+04S   5.406E+04S   6.417E+04S   6.785E+04S   7.214E+04S   8.603E+04S   9.284E+04S   9.901E+04S   1.173E+05S   1.275E+05S
  80    1.111   3.616E+04S   3.901E+04S   4.299E+04S   4.498E+04S   4.962E+04S   5.638E+04S   6.076E+04S   6.735E+04S   7.630E+04S   8.268E+04S
 600    6.794   1.118E+03S   1.866E+03S   2.911E+03S   4.473E+03S   6.592E+03S   9.720E+03S   1.392E+04S   1.975E+04S   2.740E+04S   3.732E+04S
 640    7.468   1.139E+03S   1.847E+03S   3.036E+03S   4.620E+03S   6.697E+03S   9.891E+03S   1.408E+04S   1.996E+04S   2.770E+04S   3.759E+04S
 680    8.156   1.159E+03S   1.898E+03S   3.047E+03S   4.665E+03S   6.934E+03S   1.008E+04S   1.443E+04S   2.060E+04S   2.848E+04S   3.805E+04S
 720    8.856   1.194E+03S   1.923E+03S   3.176E+03S   4.781E+03S   7.100E+03S   1.041E+04S   1.501E+04S   2.127E+04S   2.894E+04S   3.830E+04S
 760    9.566   1.169E+03S   1.950E+03S   3.213E+03S   5.002E+03S   7.468E+03S   1.080E+04S   1.543E+04S   2.155E+04S   2.900E+04S   3.850E+04S
 784    9.994   1.157E+03S   2.017E+03S   3.266E+03S   5.164E+03S   7.656E+03S   1.090E+04S   1.555E+04S   2.152E+04S   2.896E+04S   3.867E+04S
1    ZONE =  1    EDGE =  1    MACH NO. =  20.000    ANGLE OF ATTACK =   20.000    YAW ANGLE =    0.000
                                   S U R F A C E   P R E S S U R E S
OSTEP   ZETA       21           22           23           24           25           26           27           28           29           30
   1    0.502   1.615E+05S   2.210E+05S   2.213E+05S   2.217E+05S   3.002E+05S   3.005E+05S   3.008E+05S   3.013E+05S   4.001E+05S   4.006E+05S
  40    0.748   1.387E+05S   1.578E+05S   1.710E+05S   1.853E+05S   2.076E+05S   2.278E+05S   2.402E+05S   2.495E+05S   2.605E+05S   2.808E+05S
  80    1.111   9.074E+04S   1.029E+05S   1.141E+05S   1.268E+05S   1.418E+05S   1.591E+05S   1.756E+05S   1.896E+05S   2.030E+05S   2.168E+05S
 600    6.794   4.955E+04S   6.418E+04S   8.051E+04S   9.896E+04S   1.205E+05S   1.432E+05S   1.665E+05S   1.929E+05S   2.196E+05S   2.457E+05S
 640    7.468   4.919E+04S   6.333E+04S   7.949E+04S   9.818E+04S   1.195E+05S   1.425E+05S   1.656E+05S   1.908E+05S   2.196E+05S   2.458E+05S
 680    8.156   4.939E+04S   6.353E+04S   7.997E+04S   9.870E+04S   1.199E+05S   1.428E+05S   1.661E+05S   1.927E+05S   2.198E+05S   2.460E+05S
 720    8.856   4.979E+04S   6.390E+04S   8.032E+04S   9.925E+04S   1.204E+05S   1.434E+05S   1.666E+05S   1.939E+05S   2.195E+05S   2.456E+05S
 760    9.566   5.030E+04S   6.437E+04S   8.059E+04S   9.934E+04S   1.204E+05S   1.432E+05S   1.662E+05S   1.947E+05S   2.196E+05S   2.451E+05S
 784    9.994   5.049E+04S   6.443E+04S   8.060E+04S   9.936E+04S   1.205E+05S   1.432E+05S   1.660E+05S   1.944E+05S   2.197E+05S   2.451E+05S
1    ZONE =  1    EDGE =  1    MACH NO. =  20.000    ANGLE OF ATTACK =   20.000    YAW ANGLE =    0.000
                                   S U R F A C E   P R E S S U R E S
OSTEP   ZETA       31           32           33           34           35           36
   1    0.502   4.009E+05S   4.012E+05S   4.015E+05S   4.017E+05S   4.017E+05S   4.018E+05S
  40    0.748   2.977E+05S   3.086E+05S   3.164E+05S   3.222E+05S   3.265E+05S   3.290E+05S
  80    1.111   2.320E+05S   2.467E+05S   2.593E+05S   2.683E+05S   2.741E+05S   2.768E+05S
 600    6.794   2.699E+05S   2.927E+05S   3.123E+05S   3.280E+05S   3.392E+05S   3.443E+05S
 640    7.468   2.702E+05S   2.929E+05S   3.129E+05S   3.285E+05S   3.398E+05S   3.450E+05S
 680    8.156   2.710E+05S   2.936E+05S   3.133E+05S   3.291E+05S   3.405E+05S   3.457E+05S
 720    8.856   2.707E+05S   2.937E+05S   3.132E+05S   3.288E+05S   3.401E+05S   3.452E+05S
 760    9.566   2.701E+05S   2.930E+05S   3.128E+05S   3.284E+05S   3.393E+05S   3.445E+05S
 784    9.994   2.699E+05S   2.927E+05S   3.123E+05S   3.280E+05S   3.392E+05S   3.443E+05S
1                                   A E R O D Y N A M I C   D A T A
0                                 F R E E   S T R E A M   C O N D I T I O N S
          MACH NO. =      20.000    ANGLE OF ATTACK =      20.0000    ANGLE OF SIDE SLIP =      0.0000
          REF AREA =    1.000000E+00 REF LENGTH =    1.000000E+00
OSTEP   ZETA          CX           CY           CZ           CMX          CMY          CMZ          XCP          YCP
   1    0.505   4.98029E-02   0.00000E+00   1.50502E-01   0.00000E+00   8.06514E-02   0.00000E+00   1.61941E+00   0.00000E+00
  40    0.752   9.10349E-02   0.00000E+00   1.50502E-01   0.00000E+00   1.06323E-01   0.00000E+00   1.16794E+00   0.00000E+00
```

80	1.116	1.35740E-01	0.00000E+00	1.50502E-01	0.00000E+00	1.47675E-01	0.00000E+00	1.08793E+00	0.00000E+00
600	6.803	8.90488E-01	0.00000E+00	1.50502E-01	0.00000E+00	3.30087E+00	0.00000E+00	3.70681E+00	0.00000E+00
640	7.477	9.89464E-01	0.00000E+00	1.50502E-01	0.00000E+00	4.00754E+00	0.00000E+00	4.05021E+00	0.00000E+00
680	8.165	1.09110E+00	0.00000E+00	1.50502E-01	0.00000E+00	4.80249E+00	0.00000E+00	4.40149E+00	0.00000E+00
720	8.864	1.19486E+00	0.00000E+00	1.50502E-01	0.00000E+00	5.68595E+00	0.00000E+00	4.75869E+00	0.00000E+00
760	9.575	1.30044E+00	0.00000E+00	1.50502E-01	0.00000E+00	6.65938E+00	0.00000E+00	5.12087E+00	0.00000E+00
784	10.000	1.36373E+00	0.00000E+00	1.50502E-01	0.00000E+00	7.27879E+00	0.00000E+00	5.33743E+00	0.00000E+00

. NORMAL STOP

DISTRIBUTION

	Copies
Office of Naval Research Attn: Technical Library 800 N. Quincy Street Arlington, VA 22217-5000	1
Commander Naval Weapons Center Attn: Craig Porter China Lake, CA 93555-6001	1
Defense Technical Information Center Cameron Station Alexandria, VA 22304-6145	2
Commanding General Ballistic Research Laboratory Attn: Walter Sturek Aberdeen Proving Grounds, MD 21005	1
NASA Langley Research Center Attn: Jerry Allen Technical Library Hampton, VA 23365	1 1

	Copies
NASA Langley Research Center Attn: Jerry Allen Technical Library Hampton, VA 23365	1 1
Nielsen Engineering & Research, Inc. Attn: Gary Kuhn 510 Clyde Avenue Mountain View, CA 95043	2
Internal Distribution	
E231	2
E232	3
G23 (Frank Moore)	1
G23 (Leroy Devan)	1
K22	1
K24	1
R44 (Priolo)	10
R44 (Wardlaw)	10

REPORT DOCUMENTATION PAGE

Form Approved
OMB No. 0704-0188

Public reporting burden for this collection of information is estimated to average 1 hour per response, including the time for reviewing instructions, searching existing data sources, gathering and maintaining the data needed, and completing and reviewing the collection of information. Send comments regarding this burden estimate or any other aspect of this collection of information, including suggestions for reducing this burden, to Washington Headquarters Services, Directorate for Information Operations and Reports, 1215 Jefferson Davis Highway, Suite 1204, Arlington, VA 22202-4302, and to the Office of Management and Budget, Paperwork Reduction Project (0704-0188), Washington, DC 20503.

1. AGENCY USE ONLY *(Leave blank)*

2. REPORT DATE
6 May 1991

3. REPORT TYPE AND DATES COVERED
Summary; 8/90 - 2/91

4. TITLE AND SUBTITLE
ZEUS User Manual - "Real Gas" Effects

5. FUNDING NUMBERS

6. AUTHOR(S)
Priolo, F. J. and Wardlaw, A. B., Jr.

7. PERFORMING ORGANIZATION NAME(S) AND ADDRESS(ES)
Naval Surface Warfare Center (Code R44)
10901 New Hampshire Avenue
Silver Spring, Maryland 20903-5000

8. PERFORMING ORGANIZATION REPORT NUMBER
NAVSWC TR 91-86

9. SPONSORING/MONITORING AGENCY NAME(S) AND ADDRESS(ES)
Naval Weapons Center
China Lake, California 93555-6001

10. SPONSORING/MONITORING AGENCY REPORT NUMBER

11. SUPPLEMENTARY NOTES

12a. DISTRIBUTION/AVAILABILITY STATEMENT
Approved for public release; distribution is unlimited.

12b. DISTRIBUTION CODE

13. ABSTRACT *(Maximum 200 words)*

The extension and application of the ZEUS code to high, hypersonic Mach numbers by incorporating high-temperature equilibrium air or "real gas" effects is described. This approach is important for accurate aerodynamic predictions in sonic weapons. The ZEUS code is a space-marching Euler solver. It uses an automatic multiple zone grid generation technique and a finite volume, second-order Godunov scheme for steady supersonic flow. High-temperature effects are achieved by using curve fits of the thermodynamic properties of equilibrium air. Sample calculations for a sharp cone and a blunt-nosed cylinder are provided.

14. SUBJECT TERMS
ZEUS Code
Hypersonic Flight
tactical missile
real gas effects
equilibrium air

15. NUMBER OF PAGES
97

16. PRICE CODE

17. SECURITY CLASSIFICATION OF REPORT
UNCLASSIFIED

18. SECURITY CLASSIFICATION OF THIS PAGE
UNCLASSIFIED

19. SECURITY CLASSIFICATION OF ABSTRACT
UNCLASSIFIED

20. LIMITATION OF ABSTRACT
SAR

GENERAL INSTRUCTIONS FOR COMPLETING SF 298

The Report Documentation Page (RDP) is used in announcing and cataloging reports. It is important that this information be consistent with the rest of the report, particularly the cover and its title page. Instructions for filling in each block of the form follow. It is important to ***stay within the lines*** to meet ***optical scanning requirements***.

Block 1. Agency Use Only *(Leave blank)*.

Block 2. Report Date. Full publication date including day, month, and year, if available (e.g. 1 Jan 88). Must cite at least the year

Block 3. Type of Report and Dates Covered. State whether report is interim, final, etc. If applicable, enter inclusive report dates (e.g. 10 Jun 87 - 30 Jun 88).

Block 4. Title and Subtitle. A title is taken from the part of the report that provides the most meaningful and complete information. When a report is prepared in more than one volume, repeat the primary title, add volume number, and include subtitle for the specific volume. On classified documents enter the title classification in parentheses.

Block 5. Funding Numbers. To include contract and grant numbers; may include program element number(s), project number(s), task number(s), and work unit number(s). Use the following labels:

C	- Contract	**PR**	- Project
G	- Grant	**TA**	- Task
PE	- Program Element	**WU**	- Work Unit Accession No.

BLOCK 6. Author(s). Name(s) of person(s) responsible for writing the report, performing the research, or credited with the content of the report. If editor or compiler, this should follow the name(s).

Block 7. Performing Organization Name(s) and Address(es). Self-explanatory.

Block 8. Performing Organization Report Number Enter the unique alphanumeric report number(s) assigned by the organization performing the report.

Block 9. Sponsoring/Monitoring Agency Name(s) and Address(es). Self-explanatory.

Block 10. Sponsoring/Monitoring Agency Report Number *(If Known)*

Block 11. Supplementary Notes. Enter information not included elsewhere such as: Prepared in cooperation with...; Trans. of...; To be published in... When a report is revised, include a statement whether the new report supersedes or supplements the older report.

Block 12a. Distribution/Availability Statement. Denotes public availability or limitations. Cite any availability to the public. Enter additional limitations or special markings in all capitals (e.g. NOFORN, REL, ITAR).

- **DOD** - See DoDD 5230.24, "Distribution Statements on Technical Documents."
- **DOE** - See authorities.
- **NASA** - See Handbook NHB 2200.2
- **NTIS** - Leave blank.

Block 12b. Distribution Code.

- **DOD** - Leave blank.
- **DOE** - Enter DOE distribution categories from the Standard Distribution for Unclassified Scientific and Technical Reports.
- **NASA** - Leave blank.
- **NTIS** - *Leave blank.*

Block 13. Abstract. Include a brief ***(Maximum 200 words)*** factual summary of the most significant information contained in the report.

Block 14. Subject Terms. Keywords or phrases identifying major subjects in the report.

Block 15. Number of Pages. Enter the total number of pages.

Block 16. Price Code Enter appropriate price code ***(NTIS only)***

Blocks 17.-19. Security Classifications. Self-explanatory. Enter U.S. Security Classification in accordance with U.S. Security Regulations (i.e., UNCLASSIFIED). If form contains classified information, stamp classification on the top and bottom of the page.

Block 20. Limitation of Abstract. This block must be completed to assign a limitation to the abstract. Enter either UL (unlimited) or SAR (same as report). An entry in this block is necessary if the abstract is to be limited. If blank, the abstract is assumed to be unlimited.