AD-A187 815 VITAL SIGNS RATE METER(U) TEXAS A AND M UNIV COLLEGE STATION BIOENGINEERING PROGRAM C S LESSARD ET AL. SEP 87 USAFSAM-TR-87-14 F33615-83-D-0602 1/1

UNCLASSIFIED F/G 6/12 NL

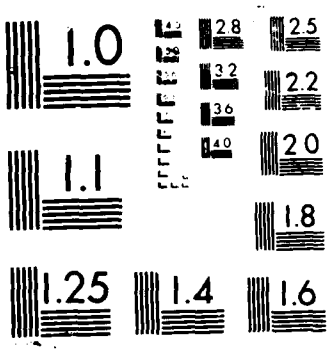
1.0
2.8
2.5
3.2
2.2
3.6
4.0
2.0
1.1
1.8
1.25
1.4
1.6

DTIC FILE COPY

USAFSAM-TR-87-14

AD-A187 015

VITAL SIGNS RATE METER

Charles S. Lessard, Ph.D., P.E.
Wing Chan Wong, M.S.
Eric T. Schorsch, B.S.
Jae-Joong Im, B.S.
Steve Mesibov, B.S.

Bioengineering Program
Industrial Engineering Department
Texas A&M University
College Station, TX 77843

DTIC
ELECTE
NOV 2 5 1987
S D
H

September 1987

Final Report for Period October 1985 - September 1986

Approved for public release; distribution is unlimited.

Prepared for
USAF SCHOOL OF AEROSPACE MEDICINE
Human Systems Division (AFSC)
Brooks Air Force Base, TX 78235-5301

NOTICES

This final report was submitted by the Bioengineering Program, Industrial Engineering Department, Texas A&M University, College Station, Texas 77843, under contract F33615-83-D-0602-17 (task order 017), job order 2729-02-21, with the USAF School of Aerospace Medicine, Human Systems Division, AFSC, Brooks Air Force Base, Texas. Mr. Yasu Tai Chen (USAFSAM/VNC) was the Laboratory Project Scientist-in-Charge.

When Government drawings, specifications, or other data are used for any purpose other than in connection with a definitely Government-related procurement, the United States Government incurs no responsibility nor any obligation whatsoever. The fact that the Government may have formulated or in any way supplied the said drawings, specifications, or other data, is not to be regarded by implication, or otherwise in any manner construed, as licensing the holder or any other person or corporation; or as conveying any rights or permission to manufacture, use, or sell any patented invention that may in any way be related thereto.

The Office of Public Affairs has reviewed this report, and it is releasable to the National Technical Information Service, where it will be available to the general public, including foreign nationals.

This report has been reviewed and is approved for publication.

YASU TAI CHEN, M.S.,P.E.
Project Scientist

F. WESLEY BAUMGARDNER, Ph.D.
Supervisor

JEFFREY G. DAVIS, Colonel, USAF, MC
Commander

UNCLASSIFIED
SECURITY CLASSIFICATION OF THIS PAGE

AD-A187015

REPORT DOCUMENTATION PAGE

1a. REPORT SECURITY CLASSIFICATION Unclassified	1b. RESTRICTIVE MARKINGS
2a. SECURITY CLASSIFICATION AUTHORITY 2b. DECLASSIFICATION / DOWNGRADING SCHEDULE	3. DISTRIBUTION / AVAILABILITY OF REPORT Approved for public release; distribution is unlimited.
4. PERFORMING ORGANIZATION REPORT NUMBER(S)	5. MONITORING ORGANIZATION REPORT NUMBER(S) USAFSAM-TR-87-14
6a. NAME OF PERFORMING ORGANIZATION Bioengineering Program Industrial Engineering Dept. 6b. OFFICE SYMBOL (If applicable)	7a. NAME OF MONITORING ORGANIZATION USAF School of Aerospace Medicine (VNC)
6c. ADDRESS (City, State, and ZIP Code) Texas A&M University College Station, TX 77843	7b. ADDRESS (City, State, and ZIP Code) Human Systems Division (AFSC) Brooks Air Force Base, TX 78235-5301
8a. NAME OF FUNDING / SPONSORING ORGANIZATION 8b. OFFICE SYMBOL (If applicable)	9. PROCUREMENT INSTRUMENT IDENTIFICATION NUMBER F33615-83-D-0602-17 (task order 017)
8c. ADDRESS (City, State, and ZIP Code)	10. SOURCE OF FUNDING NUMBERS PROGRAM ELEMENT NO. 62202F; PROJECT NO. 2729; TASK NO. 02; WORK UNIT ACCESSION NO. 21

11. TITLE (Include Security Classification)
Vital Signs Rate Meter

12. PERSONAL AUTHOR(S)
Lessard, Charles S.; Wong, Wing Chan; Schorsch, Eric T.; Im, Jae-Joong; Mesibov, Steve

13a. TYPE OF REPORT	13b. TIME COVERED	14. DATE OF REPORT (Year, Month, Day)	15. PAGE COUNT
Final	FROM 85 Oct TO 86 Sep	1987 September	53

16. SUPPLEMENTARY NOTATION

17. COSATI CODES			18. SUBJECT TERMS (Continue on reverse if necessary and identify by block number)
FIELD	GROUP	SUB-GROUP	Noninvasive bioinstrumentations; Vital signs; Heart rate; Respiration rate; Rate meter; Detectors, Diagnostic equipment, Triage, Signs and symptoms
23	01		
06	04		

19. ABSTRACT (Continue on reverse if necessary and identify by block number)

The design of the vital signs rate meter described in this report is an outgrowth from previous studies on noninvasive measurement methods and systems for vital signs detection. The purpose of the vital signs rate meter is to assist medical technicians in performance of triage within a toxic environment. Two of the primary physiological measures obtained during an emergency assessment are respiration rate and heart rate. The vital signs rate meter is a combination of hardwired circuits and programmable logic (software).

The prototype rate meter includes a microphone and a set of dry electrodes as the sensor array. A simple holder was designed to hold the sensors. Separate signal lines connect the transducers to the electronic circuits enclosed in an aluminum box. Analog signal detection and preconditioning are accomplished with analog circuitry. The conditioned signal is converted into binary format as input to the digital signal processing part of the device. A microprocessor is used as the basis for a design which provides flexibility and potential for future expansion of the device. Programs were written to perform

20. DISTRIBUTION / AVAILABILITY OF ABSTRACT ☒ UNCLASSIFIED/UNLIMITED ☐ SAME AS RPT ☐ DTIC USERS	21. ABSTRACT SECURITY CLASSIFICATION Unclassified
22a. NAME OF RESPONSIBLE INDIVIDUAL Yasu Tai Chen	22b. TELEPHONE (Include Area Code) (512) 536-2921 22c. OFFICE SYMBOL USAFSAM/VNC

DD FORM 1473, 84 MAR 83 APR edition may be used until exhausted. All other editions are obsolete.

SECURITY CLASSIFICATION OF THIS PAGE

UNCLASSIFIED

19. ABSTRACT (Continued)

additional signal conditioning, identification of signal, calculation of rates, and control of display rate and format. The vital signs rate meter measures and displays heart rate and respiration rate in a digital format.

DTIC COPY INSPECTED

Accession For
NTIS GRA&I ☑
DTIC TAB ☐
Unannounced ☐
Justification
By
Distribution/
Availability Codes
Avail and/or
Dist Special
A-1

TABLE OF CONTENTS

Page

INTRODUCTION 1
Studies at TAMU 3
Rationale for Design of Rate Meter 4

THEORY OF OPERATION 5

ECG Circuit 5
Impedance Matching (Buffer) Stage 5
Electromagnetic Interference Suppression Stage 9
Filter Stages 9
Amplification, Rectification and Level-shifting Stage 11
Respiratory Sound Circuitry 11
Sound Sensor 13
Preamplifier and Prefilter Stage 13
High-pass Filter Stage 13
Envelope Generation Stage 13
Digital Circuitry 13

HARDWARE 18

ECG Circuitry 18
Respiratory Sound Envelope Circuitry 19

SOFTWARE 20

Rotating Stack 22
INIT Routine 22
HRMAIN Routine 24
HROUTPUT Routine 27
DELAY Routine 29
Respiratory Program 29
SMOOTH Routine 32
AUTOGAIN Routine 34
RRDETECTION Routine 34
RROUTPUT Routine 37

CALIBRATION AND TESTING PROCEDURE 38

ECG Circuit Calibration 38
Offset Adjustment of Impedance Matching and CMRR Stage . . . 40
CMRR Gain Setting and CMRR Adjustment 40
Offset Calibration of MF6-50 Chip 41
Balancing of Full-wave Rectification Stage 41
Adjustment of Output Reference Level and Testing 41
Calibration of Respiratory Sound Envelope Circuit 41
Gain Setting of Amplification Stage 42

Page

Corner Frequency Setting of Envelope Generation Stage 42
Level-shifting Setup and Dynamic Testing 42
Calibration of Digital Circuit 42
Sampling Clock Adjustment 42
Zero Offset of S/H Chip 43
LCD Display Contrast Setup 43

OPERATING PROCEDURES 43

CONCLUSION 44

REFERENCES 44

List of Figures

Fig No.		Page
1	Block diagram of dry electrode ECG circuit.	6
2	Block diagram of respiratory sound envelope circuit.	7
3	Block diagram of digital circuitry.	8
4	Detailed schematic diagram of dry electrode.	10
5	Detailed schematic diagram of respiratory sound envelope circuit.	12
6	Schematic diagram of the signal format conversion section in the digital circuitry.	15
7	Schematic diagram of the signal processing section in the digital circuitry.	16
8	Schematic diagram of the output display section in the digital circuitry.	17
9	Overall flow diagram of the vital signs rate meter software program.	21
10	Diagram of a rotating stack.	23
11	Detailed flow diagram of the INIT routine.	25
12	Detailed flow diagram of the HRMAIN routine.	26
13	Detailed flow diagram of the HROUTPUT routine.	28
14	Detailed flow diagram for the DELAY routine.	30
15	A typical respiratory envelope signal.	31
16	Detailed flow chart of the digital smoothing routine, SMOOTH.	33
17	Detailed flow diagram of the automatic gain routine, AUTOGAIN.	35
18	Detailed flow diagram of the respiratory envelope detection routine, RRDETECTION.	36
19	Detailed flow diagram of respiratory rate output routine, RROUTPUT.	39

VITAL SIGNS RATE METER

INTRODUCTION

Modern warfare, with its variety of highly sophisticated technical weapons systems, has the potential of generating an unprecedented number of casualties which can overwhelm the capabilities of forward-deployed combat medical teams to assess and monitor injured combat personnel. Therefore, a requirement exists for a lightweight system to assess vital signs of casualties in a toxic environment. A vital signs rate system could provide a rapid and continuous evaluation of respiration rate and heart rate for triage.

The foundations of respiratory medicine were laid at the beginning of the nineteenth century when Laennec [1] established the clinical relationship between respiratory sound and gross pulmonary pathology by the use of the early stethoscope. Auscultation in respiratory medicine, however, has advanced slowly since Laennec established auscultation of lung sounds as a means of diagnosing the condition of the lungs. The slow progress is due to: (1) a variety of human factor problems, (2) the limitations of the instrumentation, and (3) the lack of total understanding of the source and mechanism of respiratory sounds.

Physicians usually describe the quality of sounds heard with subjective adjectives meant to convey the idea of relative intensity and pitch used to detect pathology. Words often employed to describe respiratory sounds heard through the chest wall are soft, whistling, rough, tearing, rolling, harsh, blowing, musical, scratchy, faint, moderately loud, loud, low pitched, moderately low pitched, moderately high pitched, and high pitched. For adventitious respiratory sounds, words such as dry, wet, fine, coarse, etc. are often used to qualify rales, crepitations, wheezing, rhonchi, and stridor [2]. None of these terms are defined in the language of acoustics, resulting in widely differing opinions as to their characteristics and significance. The diversity of these terms coupled with the nonuniformity of their usage in the medical field creates difficulty and confusion in the use of respiratory sounds as an indicator of the respiratory system condition. Physicians not only differ in the way they interpret the meaning of terms, they also have different perceptions of the sounds heard. This difference in perception is primarily due to the variations in human hearing ability and distortion induced by the detection instrument (stethoscope).

Both the stethoscope and the ear have limitations in their use as instruments for the evaluation of respiratory sounds. Respiratory sounds have a wide spectrum. There is no significant concentration of energy in a particular frequency band except during wheezing. However, this frequency band will differ from one patient to another. In order to compare such relative frequency intensities within a particular sound spectrum, the measuring instrument must not contribute variations in intensity as does the conventional stethoscope. An additional complication in sound evaluation is the nonlinearity of the human auditory system. The

ear recognizes very small differences in pitch, but its sensitivity to intensity variations decreases logarithmically as the intensity increases. In addition, the ear's perception of intensity falls off at both ends of the frequency spectrum [5]. With the introduction of advanced electronic microphones, amplifiers, and filters, the human factor and instrumentation shortcomings can be easily overcome. Electronic instruments can be designed to exhibit a flat frequency response over the entire range of respiratory sound spectrum. It is the lack of complete understanding of the mechanisms and sources from which respiratory sounds are generated, however, which still poses obstacles in the acceptance and advancement of using respiratory sounds as a major clinical tool in pulmonary medicine.

From previous research on the mechanism of respiratory sound generation, one may conclude that respiratory sounds are generated by either turbulence or vortices, or perhaps by both of these phenomena within the tracheo-bronchial tree. Both phenomena occur when the Reynolds number of the air flow is greater than the critical value. The Reynolds number is best applied to smooth cylindrical pipes. The tracheo-bronchial tree is neither smooth nor perfectly cylindrical. There are factors which affect the pattern of air flow and are not included in the calculation of the Reynolds number. Thus the two explanations served as good preliminary models but are still not optimized for accurate prediction. The understanding of the mechanism of respiratory sound generation remains in its infancy.

The correlation of respiratory sound intensity and the distribution of pulmonary ventilation was first studied by Leblanc et al. [7]. From their study they concluded that the intensity of respiratory sounds varied with lung volume, flow rate, body orientation, and the site of the recording. Dosani and Kraman [4] conducted studies to investigate the intensity patterns of lung sound on the chest wall. They concluded that there was a considerable intersubject and intrasubject variability in the amplitude of inspiratory vesicular sounds heard on the chest wall, and that the variability was due to factors other than the distribution of ventilation and chest wall thickness. These variations happen even with normal subjects without any diseases of the lung. They believed that the other factors included the site of production of these sounds and their transmission through the airways and lung tissue. Dosani and Kraman pointed out that the chest wall thickness may not have a predominant effect on intensity. Their results showed that sound intensity at the lateral wall was similar to sound at positions near the spine where the thickness of the chest wall is greater. The variability of acoustic properties of the chest wall accounts for the variability of sound intensity as measured at the chest wall. Previous research indicates that respiratory sounds measured at the trachea undergo very little filtering. Charbonneau [3] stated that the sound level is higher at the trachea than at any other point of the chest or back and the localization of the point is more precise. Therefore, recordings of the respiratory sound here were obtained from the area of the trachea.

Studies at TAMU

Our bioinstrumentation and signal processing laboratory at Texas A&M University has conducted research in noninvasive measurement over the past 6 years. In particular our research team has investigated the utility and application of respiratory sounds acquired from the trachea with a simple microphone.

The objective of one study was to evaluate the correlation of respiratory flow rate with the spectral estimates of respiratory sounds as measured at the trachea of normal young men [8]. From results of the general linear model (GLM) multivariate analysis of variance (ANOVA) for unbalance data, it was inferred that it is highly unlikely that the means of the parameters MPF, FP, and FM at the various constant flow rates are equal. This means that the characterizing parameters are not constant during inspiration nor are they constant during expiration. Because the GLM ANOVA test for more than two means cannot resolve which mean is different from any other mean, both Duncan and Scheffe pairwise tests were performed. The implication from the pairwise test results is that there may be a range of flow rates wherein the characteristic parameters may be constant. Therefore, regression analyses were performed over various ranges of respiratory flow. The parameters MPF and FP were grouped by the Scheffe test from 0.75 L/s to 1.5 L/s; therefore, 0.75 L/s was selected as the break point.

The conclusion reached from the regression analysis was that a direct linear relationship exists between the spectra parameters (MPF, FP, FM) and flow rate in the range from 0.25 L/s to about 0.75 L/s but levels off as the flow rate increases beyond 0.75 L/s during inspiration or expiration. This is in agreement with the finding reported by Forgacs [6] that the respiratory sound intensity was linearly related to respiratory flow rate within certain limits, up to a flow rate of approximately 60 L/min (1.0 L/s) at which point the relationship became nonlinear.

The objective of a second study [9] was to determine whether respiratory sound data of normal volunteers and pulmonary insufficient subjects can be classified as normal or abnormal pulmonary systems by discriminant analyses. For the discriminant analysis, the data were divided into two subsets, a 'training' set and an independent 'test' set for classification with the discriminants obtained from the training set. The terminology "each" is used when discussing data derived from the individual spectrum, and "mean" when discussing data derived from the average variables from numerous breaths measured from a subject. Classification with the mean data results in 80% accuracy whereas classification with individual 1/4 s segments of breath results in about 50% accuracy. The improved accuracy with mean data is the result of better estimators due to smoothing of the spectrum variability by averaging. Also, it was noted that an overall 80% accuracy with both "mean" expiratory data and the pulmonary function test (PFT) data was made possible because the statistical unit for the PFT is one subject or one mean of several breaths; but even more important, the PFT uses forced expirations for its measurements.

A third study [10] investigates the possibility of significant heart sound contribution to respiratory sound data recorded at the trachea for frequencies greater than 100 Hz. Typically, heart sounds have been filtered at cutoff frequencies less than 75 Hz. Segments of breaths from ten subjects with and without heart sounds were analyzed and compared using a paired difference t-test. The data was filtered with a 100 Hz, 8 pole digital filter prior to analysis.

The results show that the presence of heart valve sounds does significantly affect respiratory sound data as described by a set of spectral parameters. Specifically the first three moments of the frequency spectra were significantly affected as shown by pair t-tests. This implies that respiratory sound spectra studies in which heart valve sounds were filtered below 100 Hz could have errors in the findings because of the contribution of higher heart valve sound harmonics.

Rationale for Design of Rate Meter

The design of the vital signs rate meter described in this report is an outgrowth from previous studies on noninvasive measurement methods and systems for vital signs detection [11,12]. The purpose of the vital signs rate meter is to assist medical technicians in performance of triage within a toxic environment. Triage involves assessment and categorization of casualties according to a priority for further assessment and treatment [13-15]. Primary assessment of a casualty includes establishing adequate airway, checking the breathing pattern, and checking for the presence of a pulse for rate and relative strength. The physiological measures obtained during an emergency assessment are respiration rate, heart rate, and blood pressure [16,17]. Recently, Sacco et al. [18-20] presented a measure called the severity of injury index which is derived from respiration rate, heart rate, and mobility or reaction to a stimulus.

The limitations imposed by operations in a toxic environment highly influence the sensor selection, sensor location on the body, and the overall device or system design. The greatest limitation is the protective garment which all personnel must wear. Exposure of incapacitated personnel to the toxic environment must be avoided. The garment is designed to encapsulate and prevent toxic agents from reaching the body, but the garment also limits accessibility to the body for assessment of injury or triage. The area of the throat underneath the protective hood, between the mask and jacket, may be exposed by lifting the front of the hood carefully. The area of the throat provides accessible body surface to obtain vital signs from a combination of sensors.

At least two approaches may be used in the development of a device for measuring heart rate and respiratory rate. One approach is to use only hardwired analog and digital logic circuits. In this approach the discriminating and decision-making elements are fixed by the circuit design. Any change to either the discriminating or decision scheme requires a redesign and modification of the hardware circuit. Since decision making is imbedded in the logic circuits, there is no need for software.

Another approach is a combination of hardwired circuits and programmable logic (software). In this approach the analog signal detection and preconditioning are accomplished with analog circuitry. The conditioned signal is converted into binary format as input to the digital signal processing part of the device. A microprocessor is used as the basis for a design which provides flexibility and potential for future expansion of the device. With a microprocessor, programs can be written to perform addition signal conditioning, identification of signal, calculation, and control of display rate and format. Software programming permits changing parameters and logical schemes with relative ease to accommodate greater range in variance of physiological measurements. Software modifications eliminate the need for redesign and fabrication of hardware. Also, the same digital circuitry and microprocessor may be reprogrammed to function with a different type of analog signal. The second approach was used in development of the prototype vital signs rate meter.

The prototype rate meter includes a microphone and a set of dry electrodes as the sensor array. A simple holder was designed to hold the sensors. Separate signal lines connect the transducers to the electronic circuits enclosed in an aluminum box. The vital signs rate meter measures and displays heart rate and respiration rate in a digital format.

THEORY OF OPERATION

The hardware of the vital signs rate meter consists of analog and digital circuitries. The analog circuits are subdivided into dry electrode electrocardiogram (ECG) and respiratory sound circuits. The ECG circuitry includes an impedance matching (buffer) stage; high common mode rejection ratio (CMRR) electromagnetic interference suppression stage; motion artifact removal stage; high-frequency noise elimination stage; and finally the amplification, rectification, and level shifting stage. The respiratory sound consists of a preamplifier and prefiltering stage, low-frequency noise removal stage, amplification with half-wave rectification stage, and respiratory envelope and level shifting stage. The digital portion of the device is made up of three major subdivisions: (1) the analog-to-digital (A/D) conversion part which includes multiplexing, sample-and-hold, and the A/D conversion part; (2) the signal processing part which consists of the microprocessor and eraseable programmable read only memory (EPROM); and (3) the liquid crystal display and the associated controller circuitry. Figures 1 through 3 are block diagrams showing the signal flow and the relative positions of the vital signs rate meter device circuits. The functions and design realizations of all of the analog circuits, i.e. ECG and respiratory sounds, will be presented prior to the digital circuits.

ECG Circuit

Impedance Matching (Buffer) Stage

The first stage of the dry electrode ECG circuit is the impedance matching or buffer stage. Dry electrodes operate on the principle of

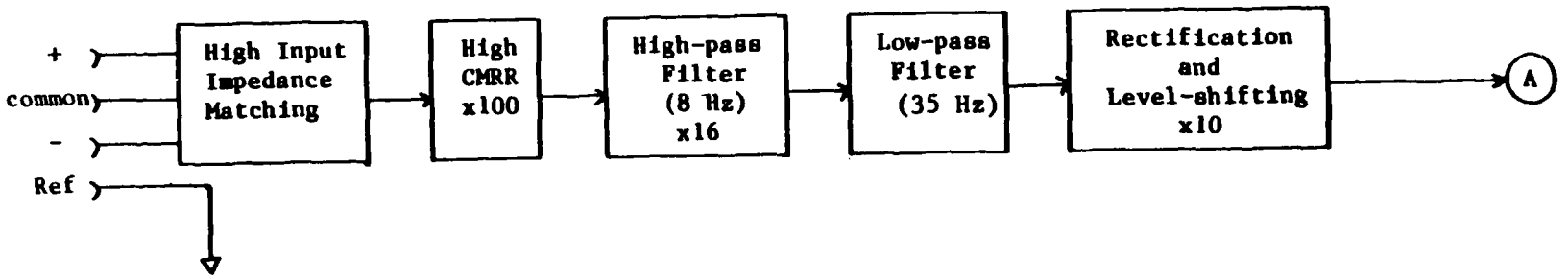

Figure 1. Block diagram of dry electrode ECG circuit.

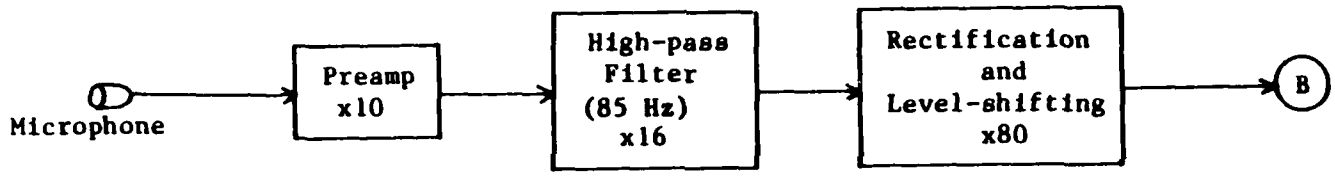

Figure 2. Block diagram of respiratory sound envelope circuit.

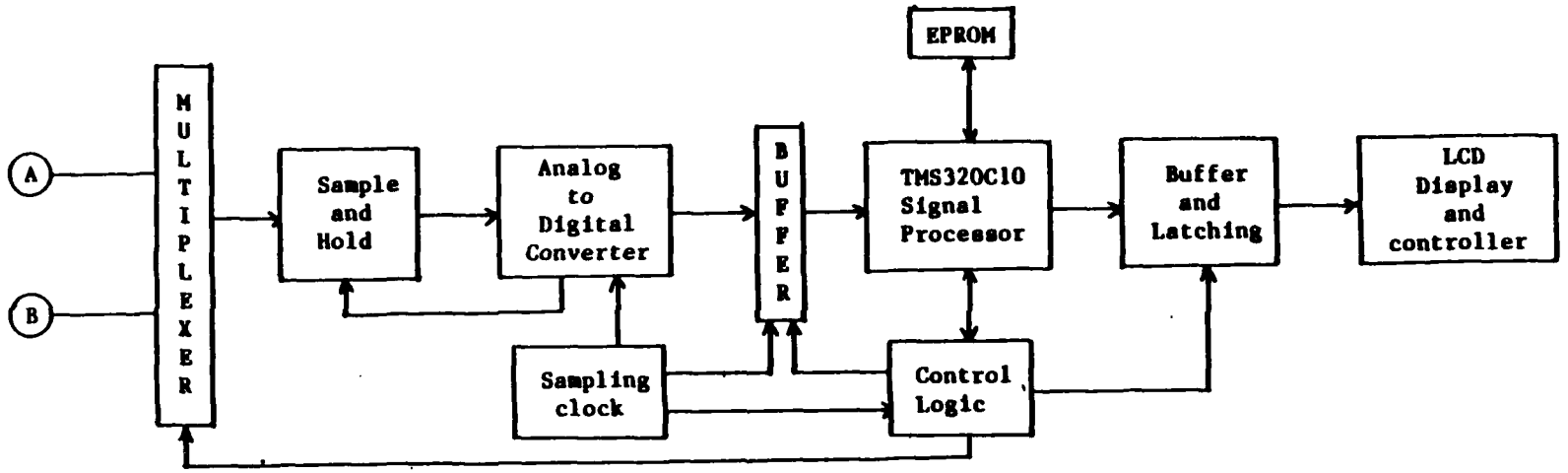

Figure 3. Block diagram of digital circuitry.

displacement current or capacitive coupling with the electrode as one parallel plate and the skin as the other parallel plate. Dry electrodes do not require paste to create a path for ion flow [21], nor is there a need for skin preparation. Without skin preparation and paste, the skin impedance is extremely high, about 10 to 100-megohm resistance. A major factor in the design is the need for an impedance matching or buffer circuit with very high input impedance to accommodate the high magnitude of skin impedance. Another critical factor of this design is the magnitude of the displacement current. The magnitude of the displacement current at the throat area is of the order of a few picoampere. High input impedance precision field effect transistor (FET) operational amplifiers (Op Amp) with low input bias current configured as voltage followers are used to achieve both requirements. National Semiconductor (NS) LH0052CD with the input impedance of 10^{12} ohm and input bias current of 1 pA was selected for the impedance matching stage (Fig. 4). The output impedance of LH0052CD semiconductor is a low, constant 75 ohm which is desirable and necessary to attain a high CMRR for the next stage.

Electromagnetic Interference Suppression Stage

The vital signs rate meter is designed as a self-contained, hand-held device. The device is said to be "floating" in relation to a common grounded reference. This design created two major problems. First, the electromagnetic field generated by the power line induces an overwhelming 60 Hz undesirable (noise) signal at the input of the ECG circuit. This signal is partially nullified by carefully tuning the CMRR stage to reject 60-Hz noise. Also, a fourth distal reference (ground) electrode is used to counter floating. The magnitude of electromagnetic pickup by the person under the examination varies, resulting from residual induced and undesirable noise signals. The ground electrode enables the device to use the distal signal and electromagnetic noise as "ground" reference. Hence, the CMRR stage only has to remove common noise at the active electrodes.

With the majority of the electromagnetic interference suppressed by the fourth electrode, the CMRR stage still has to extract and amplify the extremely weak ECG signal from the relatively strong residual electromagnetic (60-Hz) noise. The magnitude of the ECG signal detected at the throat region is in the order of 1 to 10 μV. The CMRR stage is subdivided into two parts. The first part consists of two precision FET operational amplifiers (Analog Devices AD547 Op Amp) connected in a differential mode. The signals through each Op-Amp are amplified by a factor of 100 (Fig. 4). The outputs of the AD547s are input to the differential input terminals of a National Semiconductor low-noise Op Amp LM0044CH which was chosen for its high CMRR of 120 dB. After the LM0044, the ECG signal is filtered to remove motion and high-frequency noises.

Filter Stages

Following the differential amplifier stage are two active filters. The first filter is a fourth-order Butterworth high-pass filter. The corner frequency for the high-pass filter is set at 8 Hz. The voltage-controlled-voltage-source (VCVS) configuration shown in Figure 4 has an overall gain

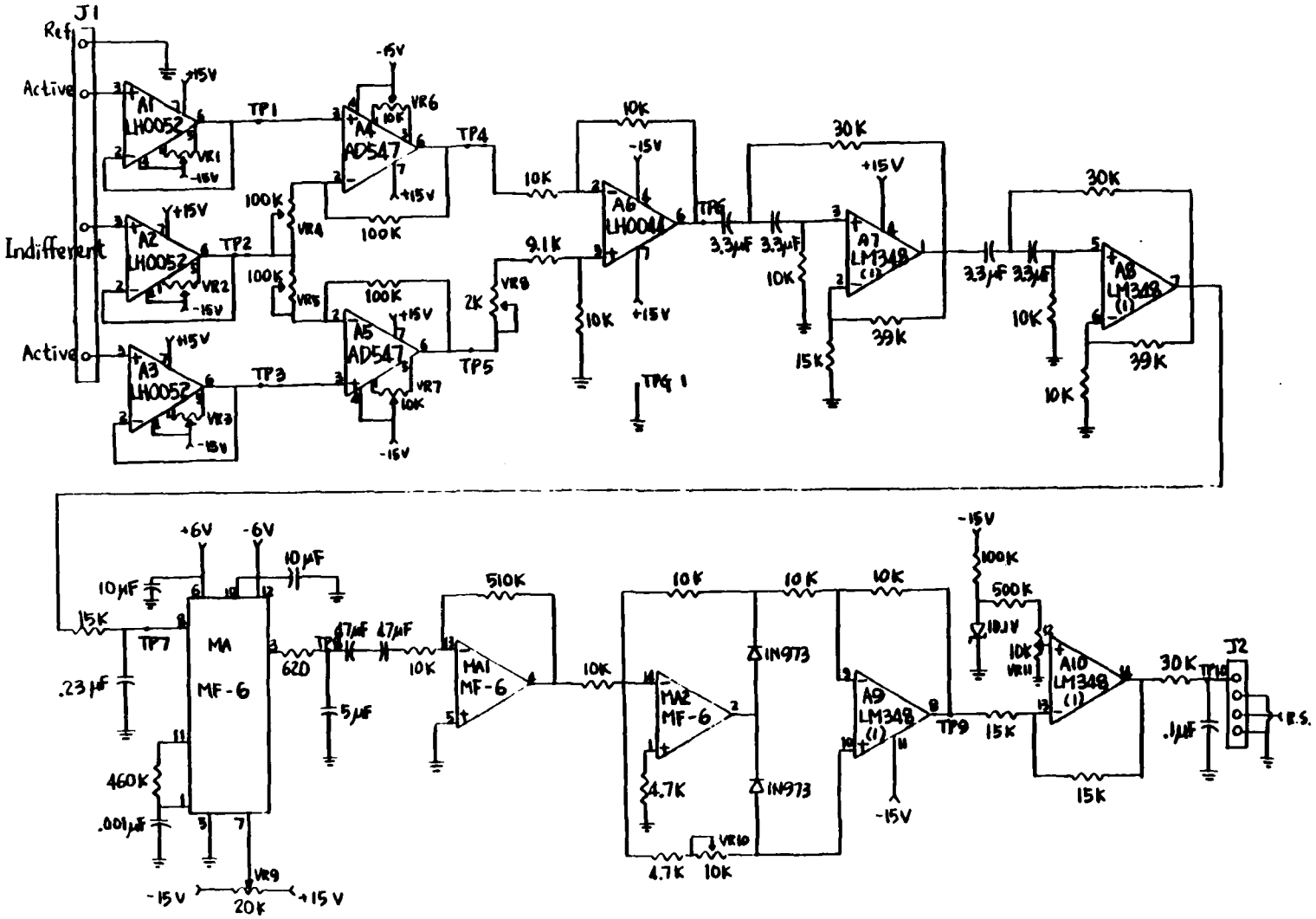

Figure 4. Detailed schematic diagram of dry electrode.

of 16. The output of the high-pass filter is input to the low-pass filter stage.

The National Semiconductor 6th order switched capacitor Butterworth low-pass filter integrated circuit (IC) chip MF6-50 is used for the low-pass filter stage (Fig. 4). The MF6-50 is a hybrid IC chip which takes an analog signal, digitizes the signal, performs digital filtering, and reconverts the digital filtered signal back to analog form.

A simple passive resistance-capacitance (RC) filter with a cutoff frequency at 50 Hz is used to prefilter and reduce aliasing of the signal to be filtered by the MF6-50 chip. The desired cutoff frequency of the MF6-50 is set by choosing the clock frequency of the chip to 50 times of the cutoff frequency. The cutoff frequency for the 6-pole, low-pass, Butterworth filter using the filter section of the MF6-50 is set at 35 Hz by setting the clock frequency at 1750 pulses per second (pps). Since the output of the MF6-50 is a signal that was converted from digital format to analog form (D/A), a passive, low-pass, post filter is used to smooth the waveform by removing high-frequency components of the signal. This filter also removes any noise from the clocking pulses which may have crossed over into the output signal. The post filter cutoff is set at 50 Hz.

Amplification, Rectification and Level-shifting Stage

The input to the single ended Op Amp section of the MF6-50 chip is capacitive coupled through 22 μF to remove any direct current (DC) component in the output signal from the MF6-50 chip (Fig. 4). The signal is amplified by a factor of 5 before full-wave rectification of the processed ECG signal. The rationale for the full-wave rectifier is to ensure detection of the QRS-complex peak regardless of polarity. The level-shifting circuit of the final stage was added to improve the accuracy of software QRS detection by decreasing the baseline from zero volt to a negative voltage not less than -1.5 V. The A/D converter in the digital section converts any negative valued voltage to binary zero, providing a cleaner signal for level detection by the software. The output signal from this stage is connected to the digital portion of the device.

Respiratory Sound Circuitry

The premise behind this circuit is that respiratory rate can be indirectly measured from the sounds of breathing acquired at the trachea. Respiratory sound signals are detected by a microphone, amplified, and filtered to remove undesirable sounds such as heart valve sounds or noise resulting from microphone movement. A half-wave rectifier is used to present the respiratory sound as a positive going signal from which an envelope of respiratory sound can be obtained. From the respiratory envelope, the software program calculates the respiratory rates. The analog portion of the respiratory sound circuits (Fig. 5) consists of a microphone sensor, preamplification and prefiltering stage, a high-pass filter stage, and the amplification, rectification, envelope generation, and level-shifting stage.

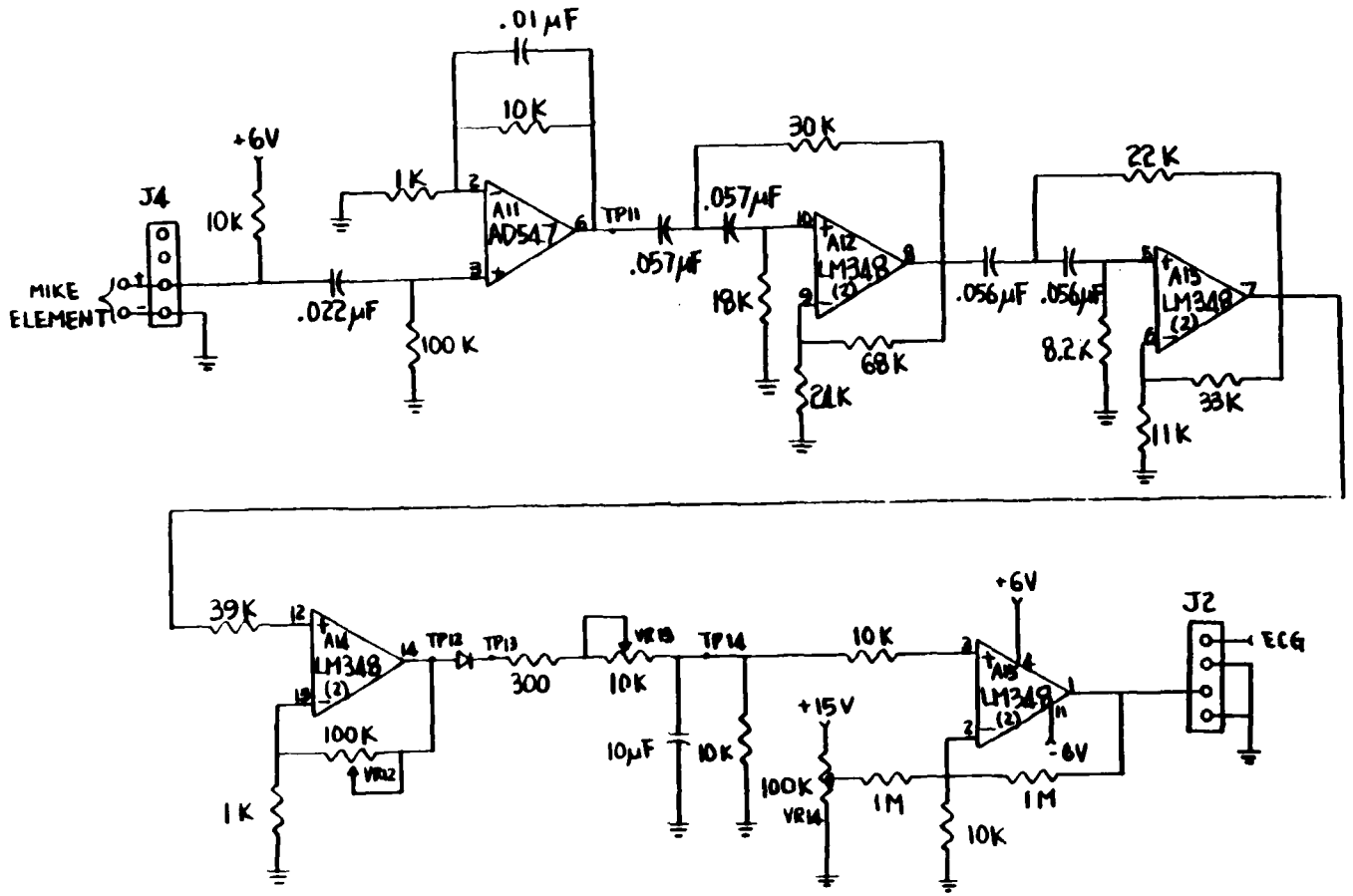

Figure 5. Detailed schematic diagram of respiratory sound envelope circuit.

Sound Sensor

The sensor element for respiration rate meter is an electret condensor microphone, Realistic model ECM WM-063T. The microphone element is powered by 5 V through a 10K ohm resistor as shown in Figure 5. This configuration provides the highest microphone sensitivity. Per manufacturer's specification, the frequency response of the microphone is flat from 30 Hz to 10 kHz. The output of the microphone is input to the preamplifier stage through an active filter.

Preamplifier and Prefilter Stage

The first stage of the respiratory sound circuit is the preamplifier and prefilter stage. The prefilter is an active, low-pass, first order filter with cutoff frequency at 72 Hz. The prefilter removes any DC offset in the microphone signal, eliminates noises from microphone movement, and reduces the intensity of heart valve sound before amplification. Also, the 0.001 μF capacitor in the feedback loop of the amplifier causes attenuation of frequencies above 1600 Hz. The preamplifier amplifies the respiratory sound signal by a factor of 10 and acts as buffer between the microphone and the high-pass filter stage.

High-pass Filter Stage

The magnitude of heart valve sound detected at the trachea is greater than the magnitude of the breath sound. Even after the prefilter, the heart valve sound magnitude is comparable with respiratory sound. The high-pass filter serves to attenuate the residual heart valve sound and amplify the respiratory sound. The filter is a fourth order, high-pass, Butterworth filter with cutoff frequency at 115 Hz and an overall gain of 16 (Fig. 5). The output of the filter is input to the next stage for added amplification and conditioning.

Envelope Generation Stage

The low-level respiratory sound is amplified by a factor of 5 with an operational amplifier before rectification. The signal is half-wave rectified by a diode (Fig. 5). The rectified signal is then smoothed by a passive first order, low-pass filter with variable time constant to generate the respiratory envelope. The level of the envelope is shifted downward (negative) by about 0.2-0.5 V to take advantage of the A/D characteristic discussed in the ECG level-shifting stage. Then, the signal representing the respiratory envelope is sent to the digital circuitry section.

Digital Circuitry

The digital circuitry of the vital signs rate device is divided into three major sections: signal format conversion, signal processing, and output display sections. These circuits are the principal components which convert the ECG and respiratory envelope signals in digital signals,

process the signals to extract rate information, and display the results in alphanumeric characters for easy reading by an operator.

The signal format conversion section (Fig. 6) consists of multiplexer, sample-and-hold, A/D converter, sampling clock and latches/buffers elements. An RCA CD74HC4352 multiplexer is used to multiplex the analog ECG and respiratory envelope signal into a single, mixed, analog signal. Multiplexing is controlled by the software program. The multiplexed signal is input to the sample-and-hold (S/H) circuit of the conversion section. A Burr Brown SHC298AM chip is used to track or sample the multiplexed signal and hold the output at a constant voltage during the A/D conversion period. An Analog Device AD7572 A/D chip converts the signal from the sample and hold chip to a digital format at the clock rate dictated by the sampling clock circuit. A National Semiconductor LM555 clock chip is used to control the A/D conversion and latch the converted output data. Two RCA CD74HC573 latches/buffers isolate (buffer) the signal format conversion section from the data bus of the microprocessor and hold the data for the signal processing section.

The second major section of the digital circuit consists of a Texas Instrument (TI) TMS32010C10 signal processing microprocessor, data-ready circuit, reset-and-hold circuit, and peripheral control circuit (Fig. 7). The TI TMS32010C10 microprocessor reads data from the RCA CD74HC573 latches/buffers in synchronization with the data-ready signal under control of the software. The data-ready signal is generated by the RCA CD74HC74(A2) data-ready circuit after the data is latched into the RCA CD74HC573 latches/buffers. The data-ready signal is cleared after the data is read by the TMS32010C10 microprocessor. A manual reset (start) is incorporated through a reset switch (SW1). When the SW1 is depressed and released, the RCA CD74HC14(2) and CD74HC14(3) reset circuit chips signal the microprocessor to start execution of the software program. Another manual switch (SW2) is provided to hold values in display. When the SW2 hold button is depressed and released, the RCA CD74HC74(A1) hold circuit signals the microprocessor to stop data processing and display refreshing or updating. Hence, the heart and respiration rates in display at the time the hold button is pressed are held in display indefinitely. The software program which controls the microprocessor actions is stored in 2 Cypress Semiconductor CY7C291(H) and CY7C291(L) EPROMs. The EPROMs are arranged in high-byte (upper 8 bits) and low-byte (lower 8 bits) configuration to form the 16-bits word required by the TMS32010C10 microprocessor. The peripheral control circuit is formed by 2 Fairchild 74AC00 and 74AC138 chips which use the addresses, data, and control signals from the microprocessor to direct the control of the microprocessor to the various peripherals, i.e., multiplexer, A/D buffers, and display.

The output display section (Fig. 8) is the last major section of the digital circuits. The display section consists of the latches, clock signal circuit, display controller, and liquid crystal display (LCD). The two latches (CD74HC573 and CD74HC74(B)) hold display data which are sent by the microprocessor to be stroked into the display controller by the clock signal. The clock signal is generated by RCA 74HC123 clock circuit. The display controller purchase from the AND division of William J. Purdy

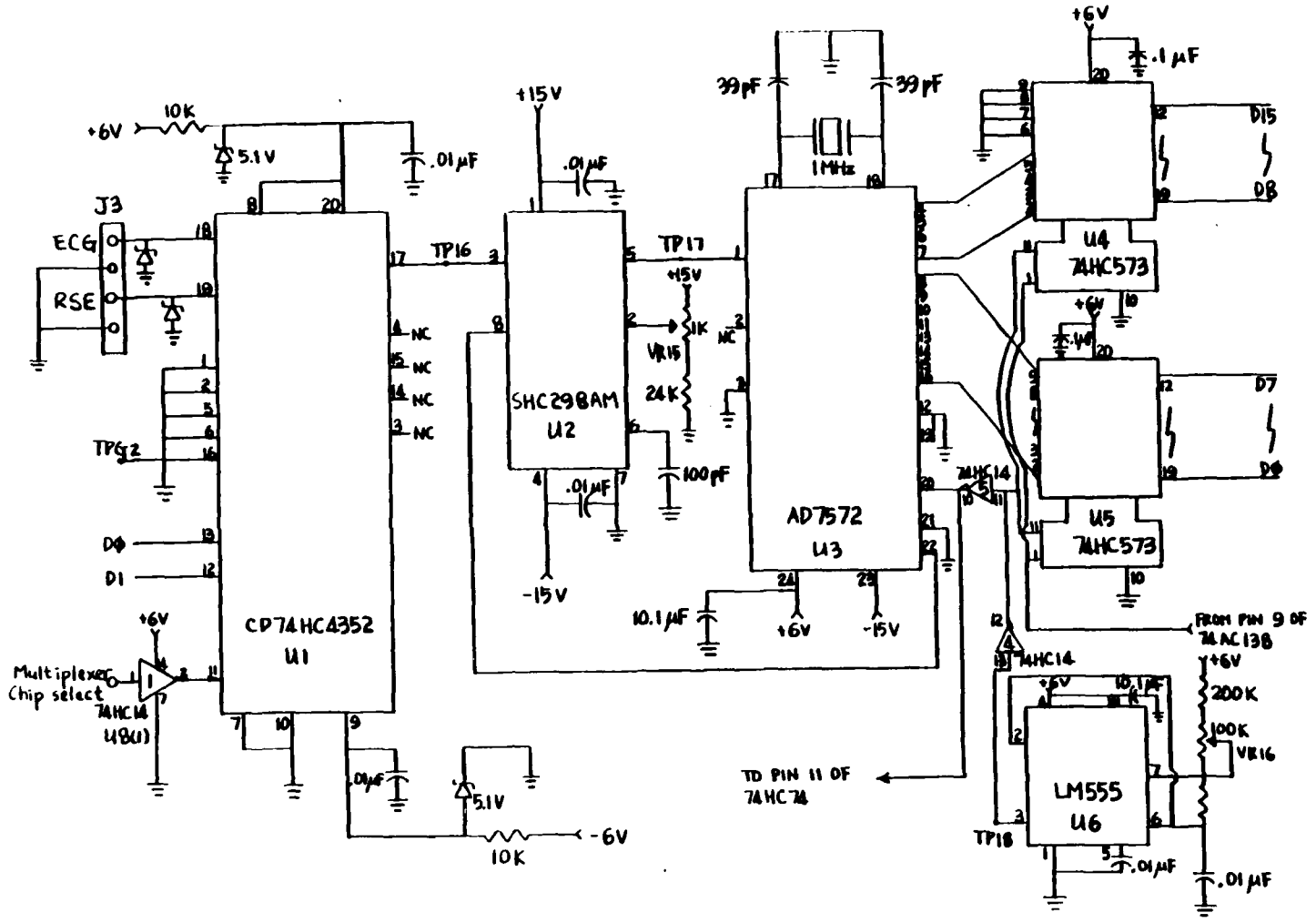

Figure 6. Schematic diagram of the signal format conversion section in the digital circuitry.

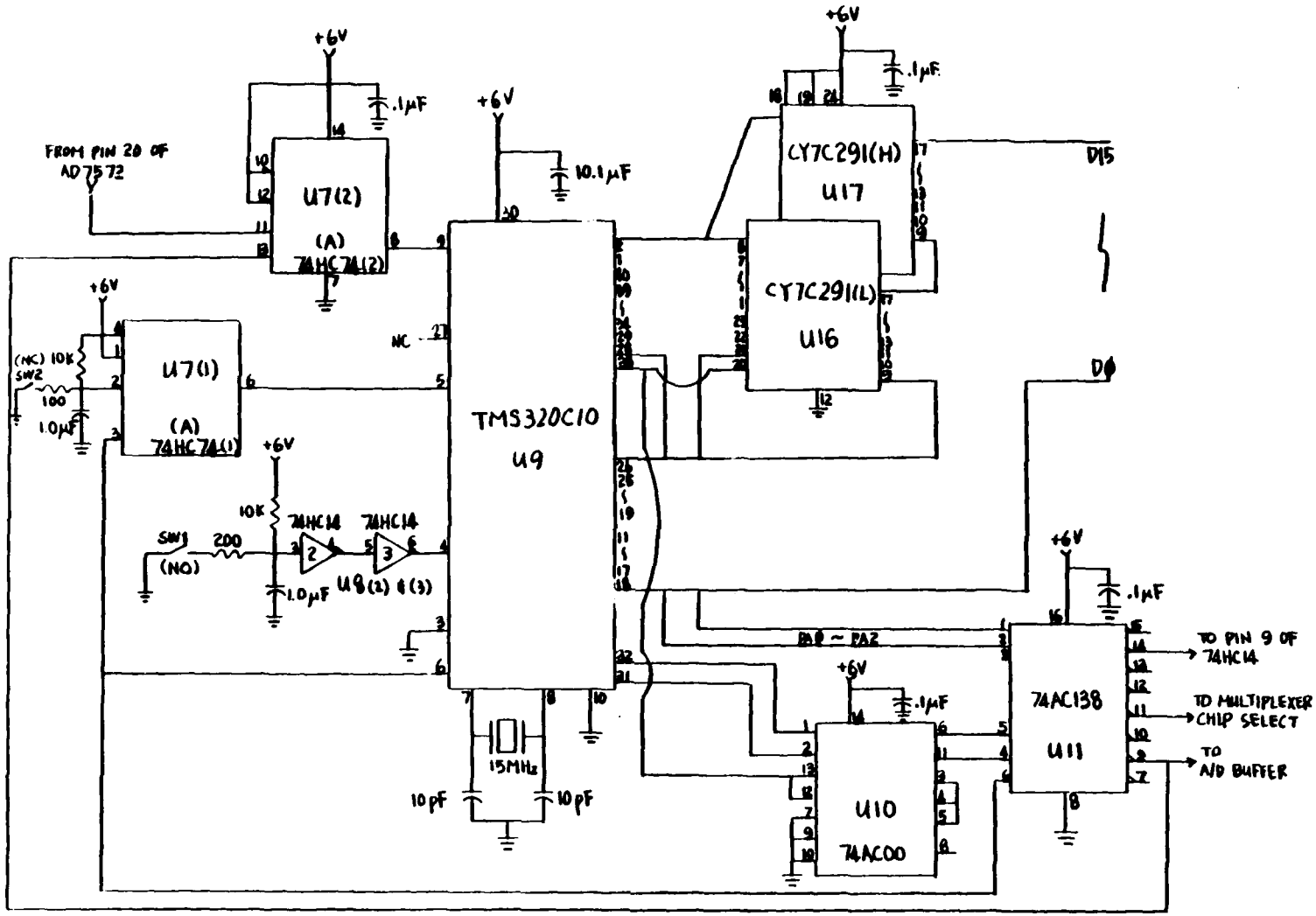

Figure 7. Schematic diagram of the signal processing section in the digital circuitry.

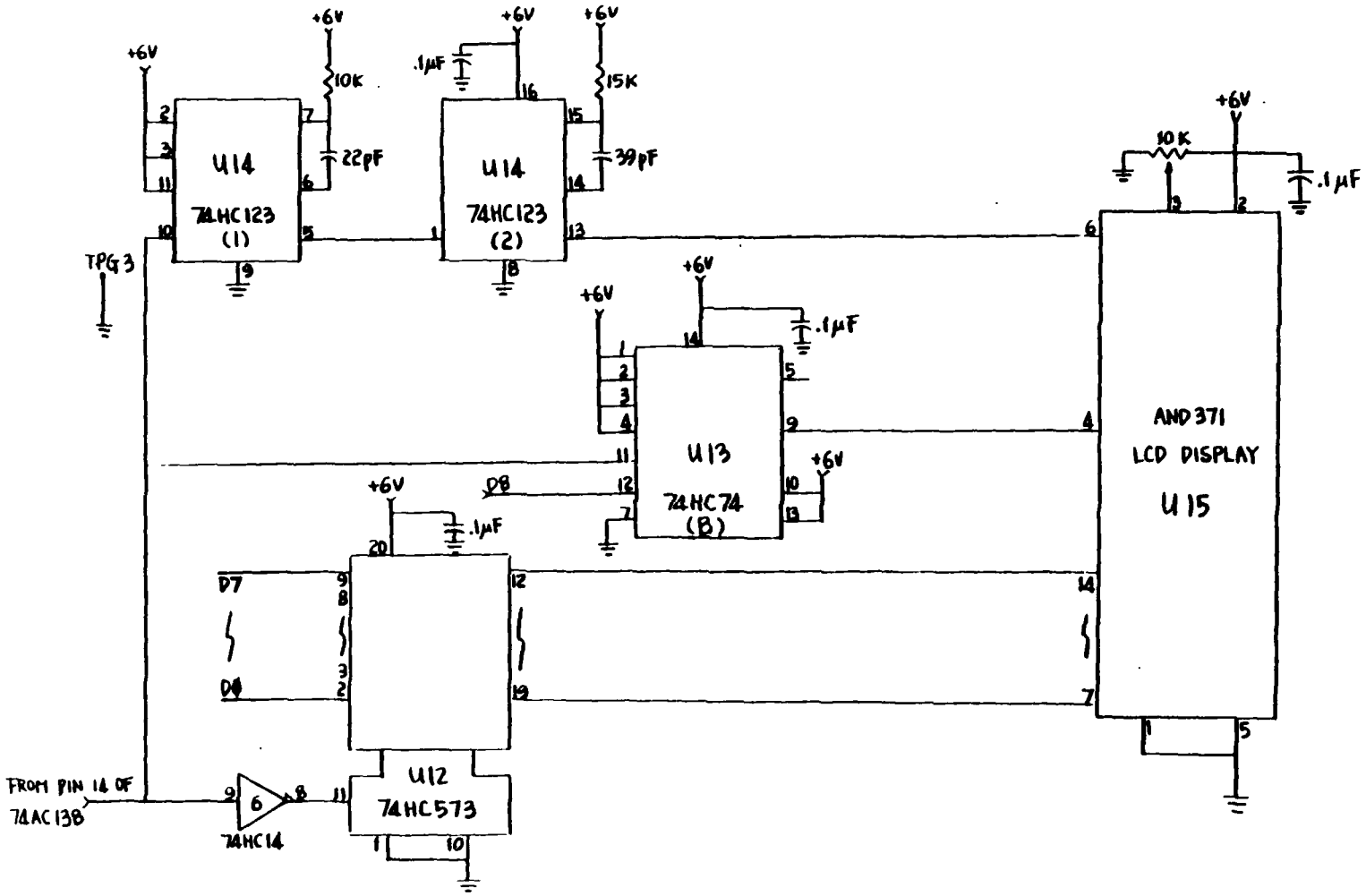

Figure 8. Schematic diagram of the output display section in the digital circuitry.

Company (AND371) converts the data to be displayed into the corresponding 5x7 dot matrix format of the LCD. Also, the display controller controls the mode of display of the cursor and position of the displaying data.

In summary, the digital circuitry section performs conversion of signals, calculation of rates, and displays the results in a numeric format to be read by an operator.

HARDWARE

ECG Circuitry

The dry electrode ECG circuit consists of impedance matching amplifiers, differential amplifiers in high common mode rejection configuration, active analog filters, a digital filtering chip, full-wave rectification and a DC offset circuit. Signals (ECG) from the active electrodes and the indifferent electrodes are input to the noninverting terminal (pin 3) of three National Semiconductor LH0052CH precision FET operational amplifiers A1, A2, and A3 (Fig. 4). The amplifiers are configured in a unity-gain, noninverting mode to serve as high input impedance (10^{15} ohm) buffers by connecting the amplifier output (pin 6) to the inverting input terminal (pin 3). The fourth electrode (distal reference) is connected to the battery reference.

From the buffer stage, the output terminals (pin 6) from A1 and A3 are connected to the noninverting terminals (pin 3) of amplifiers A4 and A5, respectively. The output of amplifier A2 (pin 6) is connected to the inverting terminals of amplifiers A4 and A5 through 100K ohm variable resistors VR4 and VR5, respectively. Maximum common mode rejection (CMR) of the unwanted noise (60 Hz) from the active electrodes is attained by adjustment of the variable resistors VR4 and VR5. The gains of amplifiers A4 and A5 are adjusted to 100 and as close as possible to each other.

A National Semiconductor precision low-noise operation amplifier (A6) in a differential mode is the final amplifier of the common mode rejection stage. The output terminals (pin 6) of amplifier A4 and A5 are connected to the inverting terminal (pin 2) and noninverting terminal (pin 3) of amplifier A6. A 10K ohm variable resistor (VR8) is used as a final adjustment for maximum common mode rejection. The output (pin 6) of amplifier A6 is connected to the positive side of a 3.3 μF polarized tantelum capacitor which forms the high-pass filter stage input.

Amplifier A7 and A8 form a two stage fourth-order, high-pass filter with the cutoff frequency at 8 Hz. The amplifiers are connected in a VCVS configuration with gains of 3.6 for the first stage (A7) and 4.9 for the second stage (A8). One-half of National Semiconductor LM348 low power quad operational amplifier is used for the high-pass filter (A7 and A8). The other two operational amplifiers of the LM348 are used in the rectifier (A9) and level-shifting (A10) stages. The output (pin 7) of amplifier A8 is connected to the 15K ohm resistor of a passive first-order, low-pass filter

(3.75 ms time constant) before the National Semiconductor MF6-50 (MA) sixth-order, low-pass, Butterworth filter with a cutoff frequency at 35 Hz. The input (pin 8) of the MP6-50 chip is digitized, digitally filtered, and output at pin 3 in an analog (D/A converted) waveform. The clock pulsations of the MF6-50 chip are set by adjustment of R14 and C6 connected to pins 9 and 11. The output of the MF6-50 (pin 3) is connected to the 650-ohm resistor of a first-order, low-pass post filter. Two 47 μF capacitors are connected in series to block the DC component of the signal between the output of the post filter and the input of the gain stage. Amplifier MA1 is connected in the standard inverting amplifier configuration. The amplifier amplifies the filtered ECG signal by a factor of 51. The output (pin 4) of the MF6-50 operational amplifier MA1 is input (pin 14) to the second operational amplifier MA2 of the same MF6-50 chip. The amplifier MA2 forms half of the full-wave rectifier stage. Two 1N973 diodes are connected from the output (pin 2) of the amplifier MA2 to the input terminals (inverting pin 9, and noninverting pin 10) of amplifier A9 and to the inverting input (pin 14) of the amplifier MA2 (Fig. 4). The gains of the amplifiers MA2 and A9 are set to unity with 10K ohm resistors. The output of amplifier A9 (pin 8) is input to the DC level-shifting stage. Amplifier A10 (one of the operational amplifiers in the LM348) is used in a unity gain inverting amplifier configuration. A voltage divider is connected from the -15 V supply to the noninverting terminal (pin 12) of the amplifier A10. Desired DC offset is adjusted by the variable resistor VR11. The output (pin 14) of the amplifier A10 is connected to a first order, low-pass filter with a 3-ms time constant. The output of the low-pass filter is input to the A/D converter of the digital circuitry.

Respiratory Sound Envelope Circuitry

The respiratory sound envelope circuitry includes a microphone, filter, gain, half-wave rectification and level-shifting circuits (Fig. 5). The respiratory sound envelope waveform from these circuits is used to calculate the respiration rate of a subject.

The microphone is connected to a single-pole, high-pass filter with a time constant of 2.2 ms. The output of the high-pass filter is connected to the noninverting input terminal of Analog Device AD574 Op Amp (A11) which is configured as a low-pass filter with a gain of 10. The output (pin 6) of A11 of the low-pass filter is connected through two 0.057 μF capacitors to the noninverting input terminal (pin 10 of A12) of a four-pole, high-pass filter with cutoff frequency at 110 Hz and a gain of 16. Two Op Amps (A12 and A13) of a National Semiconductor LM348 quad Op Amp chip are used for the active high-pass filter. The output of the high-pass filter (pin 7 of A13) is connected to the input (pin 12 of A14) of the half-wave rectifier stage. The output (pin 14) of amplifier A14 in the rectifier is connected through the diode D1 to the respiratory envelope generator, a low-pass filter with a variable time constant. The respiratory envelope signal is input to the noninverting terminal (pin 3 of A15) of the level-shifting stage. The DC level of the envelope signal may be adjusted by varying the potentiometer VR14. The output (pin 1 of A15) of the level-shifting circuit is connected to the second pin (left to right) of output jack J2. Output

jack J2 is connected to the input jack J3 of the digital circuit by ribbon cable.

SOFTWARE

The software consists of two independent programs, one to monitor respiration rate (RR) and one to monitor heart rate (HR). A flag controls which program is currently executing. The RR program inputs one sample of respiratory data and completely processes it before the program inputs one sample of ECG data, and vice versa. Heart rate data can be input from any of three routines, i.e., the initialization routine (INIT), the R-peak detection routine (HRMAIN), or the delay routine (DELAY) within the HR program. Once one of these routines inputs HR data, the data is processed and a control flag transfers execution to the RR program.

Both the RR and HR program input data at 256 samples/second. This work is accomplished by using a multiplexer and an A/D converter sampling at 512 samples/second. Before data is input, the address of the data for the other program is sent to the multiplexer to assure the data is latched into the buffer before it is read. As soon as one sample of data is read by either the HR or RR program, the next sample of data is latched from the A/D to the buffer. The programs alternate reading the buffer; thus the actual sampling rate for each program is 256 samples/second, half of the 512 samples/second, the conversion rate of the A/D.

Figure 9 shows the overall flow diagram of the two programs. The RR program consists of four routines: a digital smoothing routine (SMOOTH), an automatic gain routine (AUTOGAIN), an inspiration and expiration envelope detection routine (RRDETECTION), and a respiratory rate calculation and output routine (RROUTPUT). A sample of data is input to the SMOOTH routine. The sample is smoothed by a median and an exponential smoother. The output of the digital smoothers is input to the AUTOGAIN routine. The AUTOGAIN routine has two modes, saturation and unity. If the program is in saturation mode, the output of the smoothers is assigned 4096 or the equivalent of 5 V if it exceeds a software level and a value of zero volt if it does not. If the program is in unity gain mode, the value of the output of the smoothers is not altered. The RRDETECTION routine determines how many samples elapse between each inspiration or expiration cycle. This routine also differentiates between noise glitches and actual respiratory envelope data. The RROUTPUT routine uses the number of samples determined by the RRDETECTION routine to calculate the respiratory rate from a half breath. This rate is added and averaged with the three most recent respiratory rate calculations and output to the display. Once the RR program has been executed it checks the flags set by the HR program to determine which HR program routine is to be executed.

The HR program also contains four routines: an initialization routine (INIT), an R-peak detection routine (HRMAIN), a delay routine (DELAY), and heart rate calculation and output routine (HROUTPUT). Data is input by any of the three routines INIT, HRMAIN, or DELAY. Only one of these routines executes per sample input. The INIT routine reads in the first 2 s of data

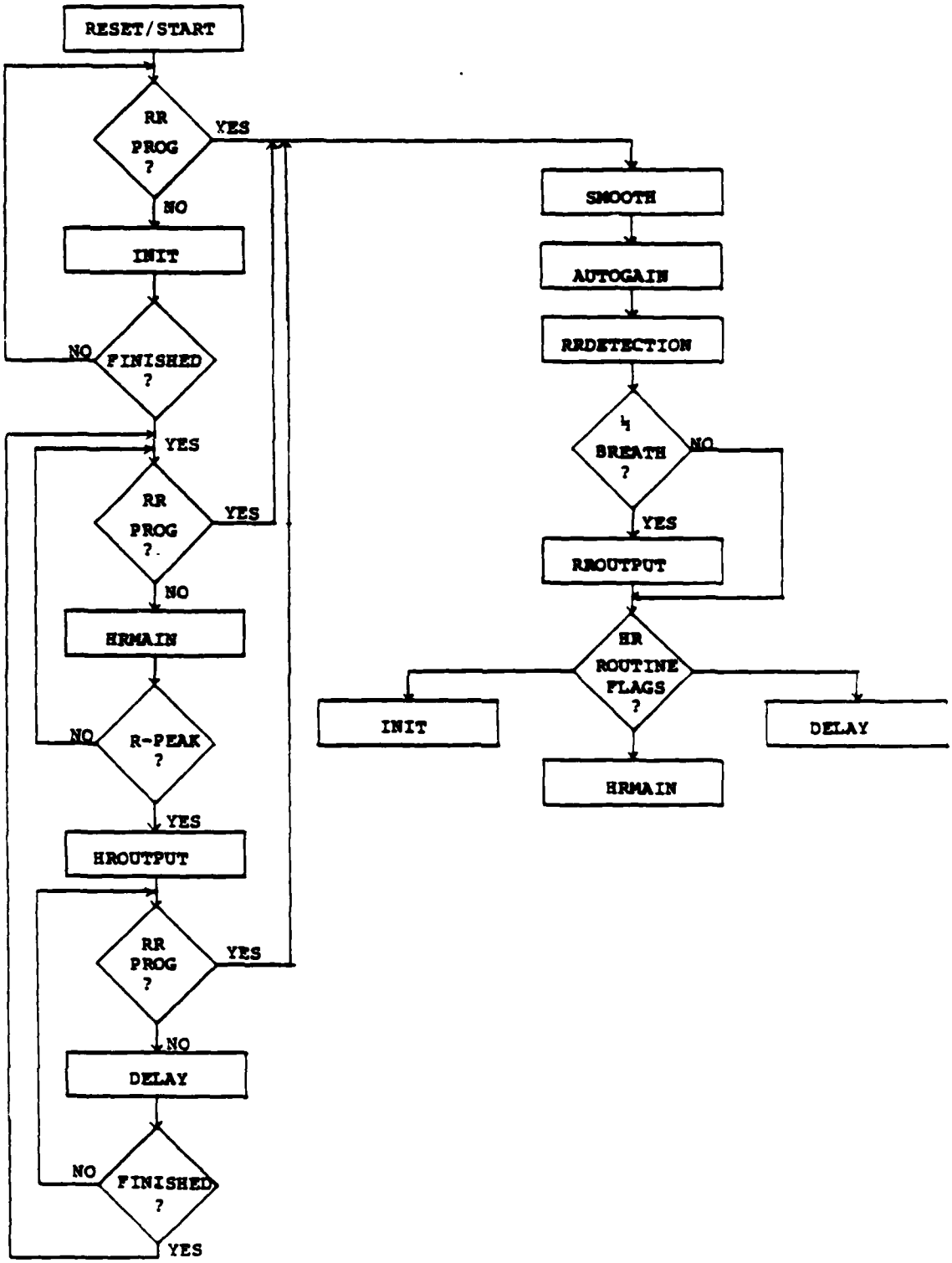

Figure 9. Overall flow diagram of the vital signs rate meter software program.

and disregards these samples due to power surges and noise glitches. Then this routine determines the maximum value in the second 2 s of data which is assumed to be an ECG maximum R-peak. The INIT routine also records the 5th sample prior to the maximum value. This information is used to set a software slope detection. The maximum value is used to set a software level detection. After the first 4 s of program execution the INIT routine is no longer used.

The HRMAIN routine uses the software slope and level set by the INIT routine to find the R-peaks of the ECG signal. A counter keeps track of the number of samples between R-peaks. Once an R-peak is found the HR program enters the HR OUTPUT routine. This routine uses the number of samples between R-peaks to calculate the heart rate; then it averages the four most recent heart beats and outputs the average heart rate.

After an R-peak is detected and the heart rate is output the delay routine is used to read in data for 300 ms to reduce the chance of detecting T-waves as R-peaks. No calculations are done in this routine; the data is merely input and stored. During the HR routines a control flag is set which transfers execution back to the RR program after the routines are finished.

Rotating Stack

A rotating stack is used in several of the routines. Figure 10 shows how a rotating stack works. The memory location X0 represents the most recent sample; location X1 represents the previous value of X0; location X2 represents the previous value of X1, and so on. Assume an incoming data stream which contains samples X, Y, and Z respectively in time. Sample X is the first element to be entered into the stack. Sample E at the bottom of the stack (Fig. 10) is replaced by D. The rest of the elements are rotated down one position. This process continues as samples are input at the top of the stack.

A rotating stack is used to input all samples to both the RR and HR programs. This stack is also used to average heart beats and breaths. A rotating stack is well suited for processing data in real time.

INIT Routine

The INIT routine is necessary to set ECG R-peak parameters for the HRMAIN routine. The first 2 s of HR data contains some undesirable power surges and noise glitches; thus, this data is disregarded. By the second 2 s of data the ECG signal is more stable and significantly better results are achieved.

The parameters computed are a software level and a software slope. The software level is 50% of the maximum value found in the second 2 s of data. The software slope is 60% of the same maximum value minus the value of the 5th sample prior to the maximum sample. This routine is easily

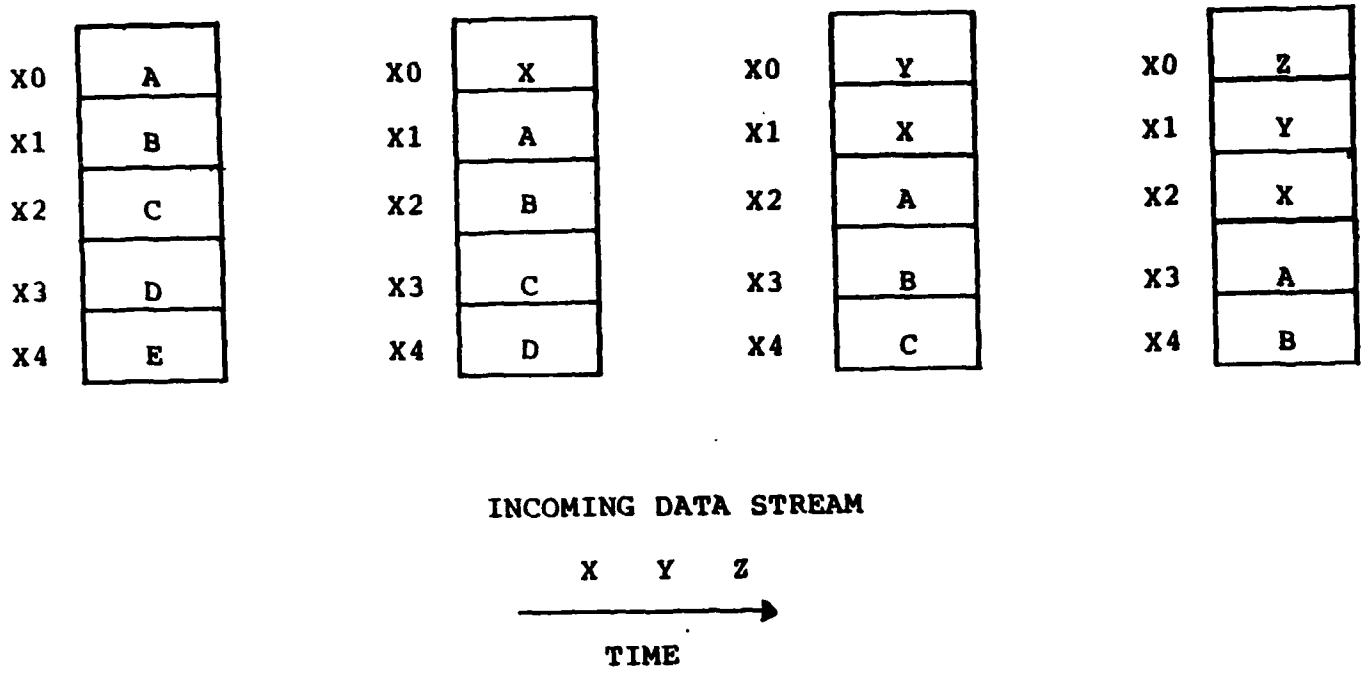

Figure 10. Diagram of a rotating stack. Rotating stacks are used for all data entry and for computing the average heart rate and respiratory rate.

accomplished using a 7-element rotating stack to keep track of the history of the data. Figure 11 shows a flow diagram of the INIT routine. At the beginning a counter (ICNT) is loaded with 511, which counts down to zero. Thus 512 samples or 2 s worth of data are input before the routine is finished the first time as well as the second time. After ICNT is equal to zero, a control flag is checked to assure HR data should be input. If HR data should not be input the routine transfers execution to the RR program and the flag for the INIT routine is set.

If the routine is supposed to input a sample of HR data, the control flag is set for the program to switch to the RR program. A sample of HR data is input at the top of a 7-element stack and assigned the variable name X0. The value of X0 is the value of the future sample; X1 is the value of the present sample; and X2 is the value of the past sample.

Before a sample is input the address of the RR data is sent to the multiplexer to assure that the RR sample is latched into the buffer before control returns to the RR program. Once the sample X0 is input it is compared to the sample X1. If the value of X0 is larger than the value of X1, the routine decrements ICNT and repeats. If the value of X0 is smaller than the value of X1, the routine compares the value of X1 to the value of X2. If the value of X1 is larger, the routine stores the value of X1 as the present maximum (MAX1). The routine also stores the value of the 5th sample prior (X6) to the present sample in the variable DIFF for slope computation. If the value of X2 is larger than the value of X1, the routine decrements ICNT and repeats.

After ICNT reaches zero for the first time it is reset to 511 to input the second 2 s of data. The variables MAX1 and DIFF are zeroed and the routine repeats. After ICNT reaches zero for the second time, the routine calculates the level and slope. The variable LEVEL is 50% of the maximum value found in the second 2 s of data. The variable SLOPE is 60% of the maximum value minus the corresponding value of X6. Once the variables LEVEL and SLOPE are calculated the INIT routine is completed. This routine is no longer used unless the program is reset.

HRMAIN Routine

The HRMAIN routine (Fig. 12) detects the R-peaks of the ECG signal and counts the number of samples between the R-peaks. The number of samples between R-peaks is passed to the HROUTPUT routine, and is used to calculate the heart rate.

Before the HRMAIN routine is executed, the control flag is checked to determine if HR data is supposed to be input. If HR data is not to be input, control is transferred to the RR program and the HRMAIN flag is set. If HR data is supposed to be input, the control flag is set for the RR program. The same input stack used for the INIT routine is rotated, and the address of the RR data is sent to the multiplexer. Similarly to the INIT routine a sample of HR data is input to the top of the stack and called X0. The value of the present sample X1 is compared to the variable

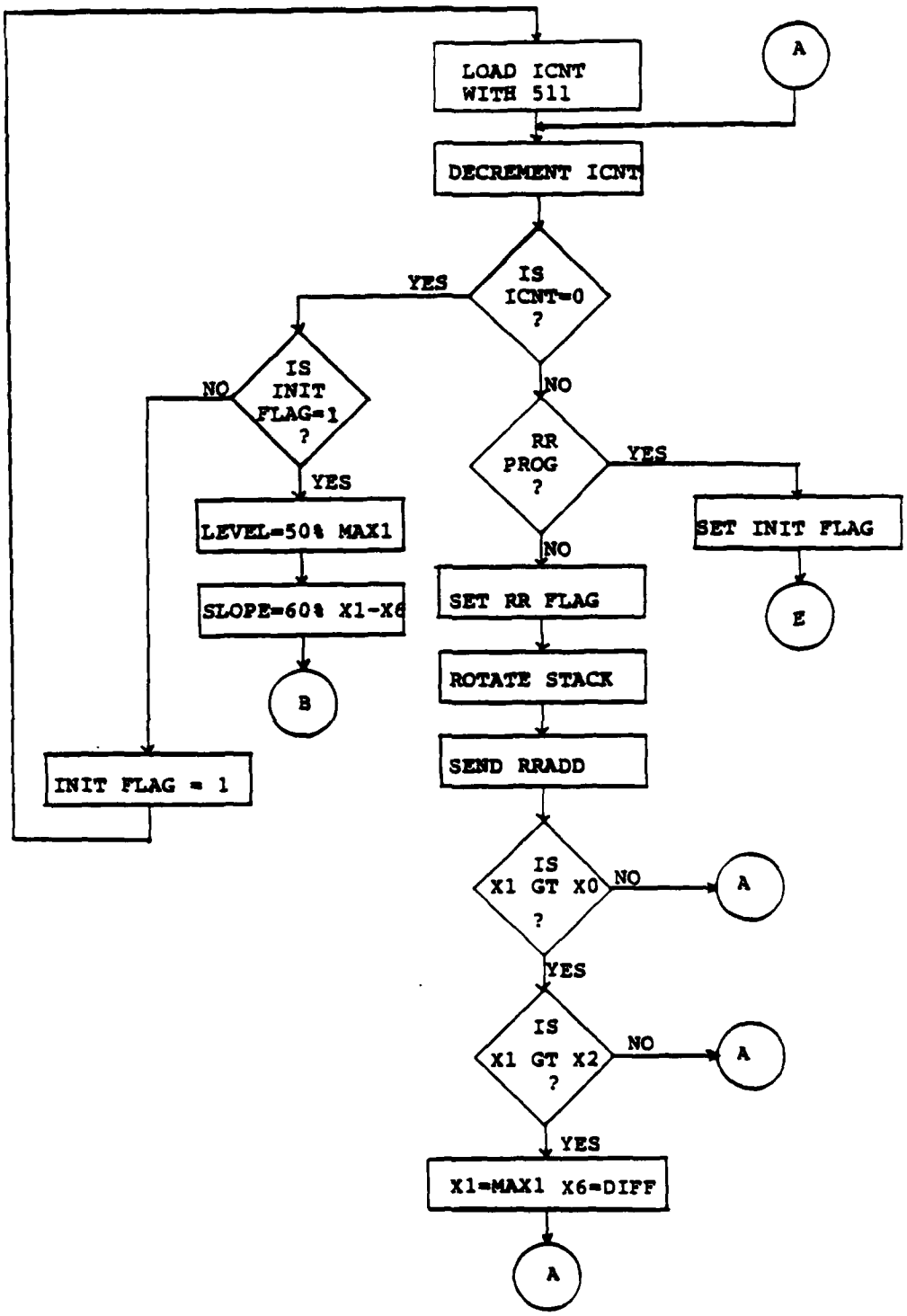

Figure 11. Detailed flow diagram of the INIT routine. The INIT routine sets parameters R-peak detection.

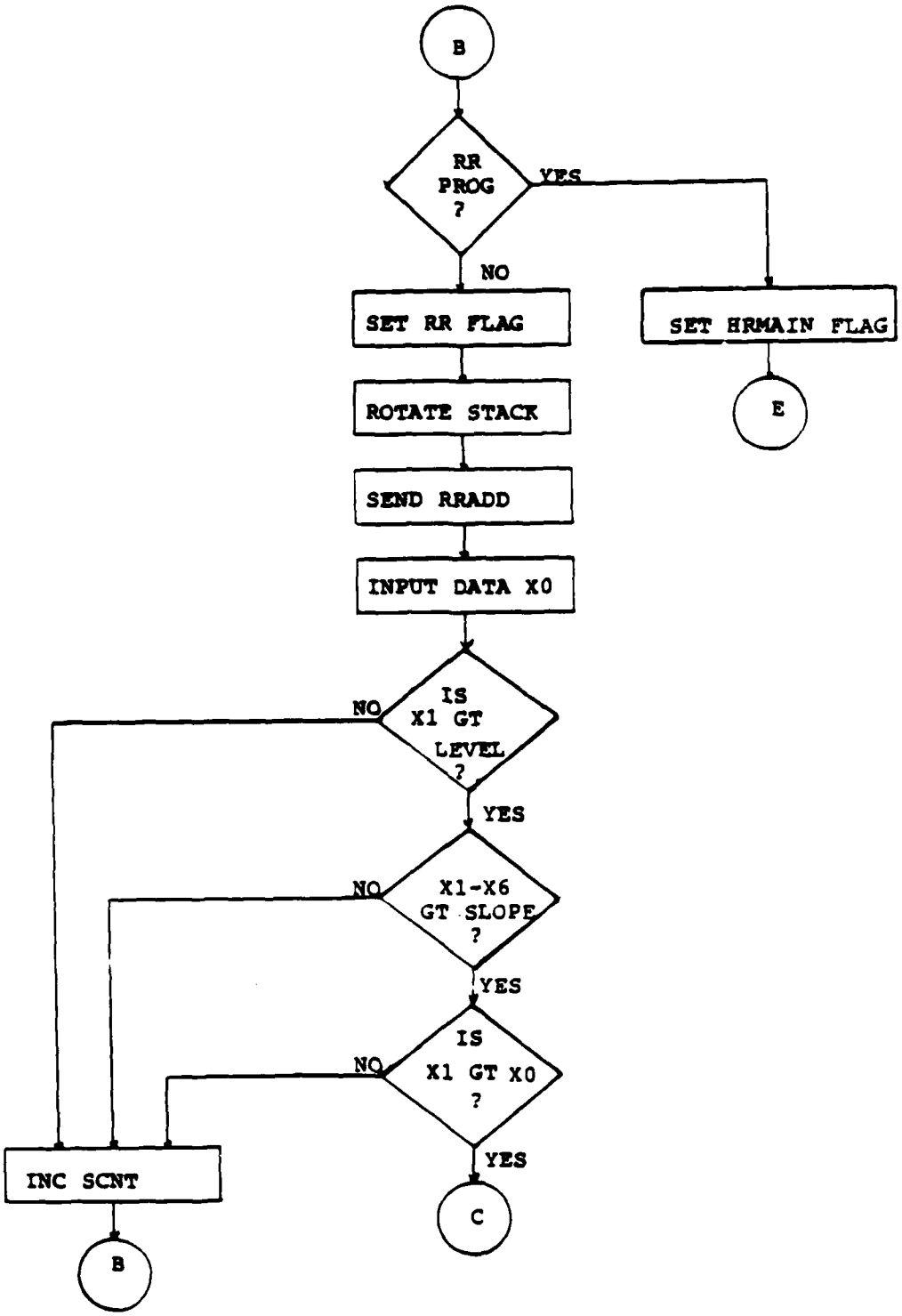

Figure 12. Detailed flow diagram of the HRMAIN routine. The HRMAIN routine detects the R-peaks of the ECG signal and counts the number of samples between successive R-peaks.

LEVEL set in the INIT routine. If the value of X1 is larger, then the value of the difference (X1-X6) is compared to the variable SLOPE. If this value is also larger, the program assumes a QRS complex of the ECG signal has been detected and proceeds to find the R-peak. If either of the preceding conditions is not met, the program increments the sample counter (SCNT) and repeats the routine.

Detection of the R-peak is accomplished by comparing the value of X1 to the value of the future point X0. When the value of X1 is larger than the value of X0, the peak has been reached. At this time the value of SCNT is passed to the HROUTPUT routine for calculation of the heart rate.

HROUTPUT Routine

The HROUTPUT routine uses the value of SCNT determined by the HRMAIN routine to calculate the heart rate. If the display is supposed to be refreshed, the average of the most recent 4 beats is sent to the display; otherwise, the program branches to the DELAY routine. No data is input during this routine.

Figure 13 shows the HROUTPUT routine. Four heart beats are averaged by summing the value of the 4 most recent SCNTs and dividing 61440 by the sum. The number 61440 represents 4 beats times 256 samples/second times 60 s/min. At the beginning of the program all of the SCNTs in the stack are assigned the value zero. After the first value of SCNT is determined, all of the SCNTs in the stack are assigned this value; otherwise, the first 3 calculations of the heart rate would be too high, since the sum of the SCNTs would be a small valued denominator.

The sum of the 4 most recent SCNTs is stored in the variable SCTOT. Due to the limitations of the processor, the value of SCTOT has to be divided by two. Thus, half the value of 61440 (30720) is divided by the modified SCTOT to calculate the heart rate.

After the heart rate is calculated, the routine checks the refresh flag. The refresh flag is set according to the heart rate. If the heart rate is slow (less than 90 bpm), the display is refreshed every few beats; however, if the heart rate is rapid (greater than 90 bpm), the display is only refreshed about every 10 beats. If the display is to be refreshed, the digits of the heart rate have to be converted to ASCII code.

The heart rate is divided by 100 and the quotient is the hundreds digit. If there is no hundreds digit, a blank is sent to the display. The remainder is divided by 10. The quotient of this division is the tens digit and the remainder is the ones digit. Conversion to ASCII code is accomplished by adding 70 hexidecimal to all of the digits.

After the digits are converted to ASCII code the address of the appropriate display position is sent to the LCD display. Since the microprocessor clock is exceedingly fast (15 MHz), the program execution time for each step must be slowed down by various program loop routines.

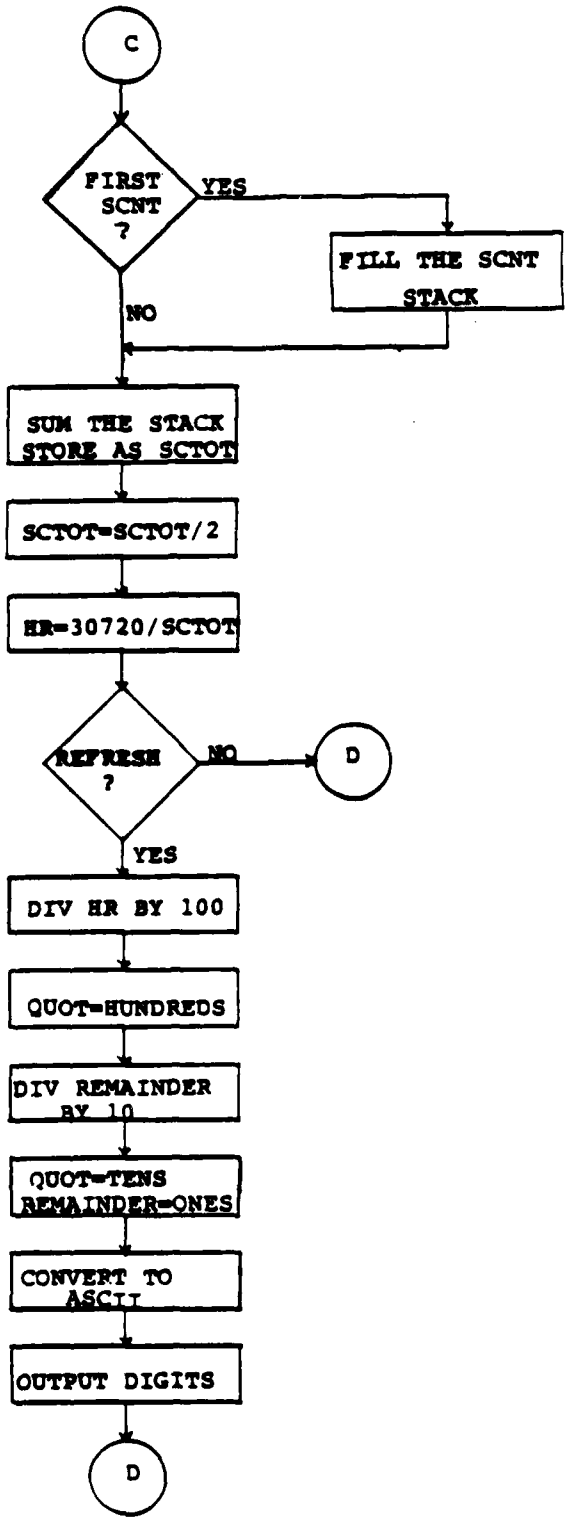

Figure 13. Detailed flow diagram of the HROUTPUT routine. The HROUTPUT routine uses the number of samples found in the HRMAIN routine to compute the HR. The routine averages this HR with the four most recent heart beats and outputs this average.

The purpose for the delay is to accommodate and synchronize the time (1.64 ms) required to set up the LCD display. Each digit is sent to the display with a delay following each output. The address of the display automatically increments so it is not necessary to send another address. The hundreds digit is sent first and the ones digit is sent last. After all the digits have been sent the program branches to the DELAY routine.

DELAY Routine

The DELAY routine inputs 300 ms worth of samples and does no computations. After the delay is complete the routine loads SCNT with the appropriate number of samples to compensate for the time which has elapsed since the last R-peak.

Figure 14 shows the flow diagram for the DELAY routine. At the beginning a counter (DCNT) is loaded with 78, the number of samples in 300 ms. Then the routine checks the control flag. If respiratory data is supposed to be input the DELAY routine flag is set and control is transferred to the RR program. Otherwise, the control flag is set for the RR program, and the DELAY routine continues execution. The same stack that is used for the INIT and HRMAIN routines is used to input a sample of HR data. The counter (DCNT) is decremented and the routine checks the value of DCNT. If DCNT is zero, SCNT is restored to 78 to preserve the time from the last R-peak, the control flag is set to the HR program since a HR data sample was not input, and the program returns to the HRMAIN routine. If DCNT is not zero, the routine sends the RR data address to the multiplexer and inputs a HR data sample to the top of the stack (X0). The DELAY routine then checks the control flag and executes again.

Respiratory Program

Because of the large dynamic range of tracheal breath sounds and the inherent noise of tracheal breath sounds, considerable signal conditioning is necessary to detect the respiratory envelope.

A typical inspiration or expiration envelope signal is shown in Figure 15a. Note that much of the noise is below zero because of the hardware level shifting circuit. The rationale for the level shift is so the A/D converter will assign a zero value to any negative valued data sample. Figure 15b shows the output of the digital smoothers. The noise glitch is no longer present and the envelope is smoothed. Figure 15c shows the envelope after passing through the saturation mode automatic gain routine. As soon as the signal crosses the T1 level (T1=700), the RR data samples are assigned the value equivalent to saturation (4096). Any RR data sample less than the T1 level is assigned the value zero. The result is a square pulse train output by the automatic gain routine which makes respiratory rate detection easy.

Figure 15d shows shallow breathing. The problem is that the signal is not large enough to trigger the software saturation amplifier. Therefore,

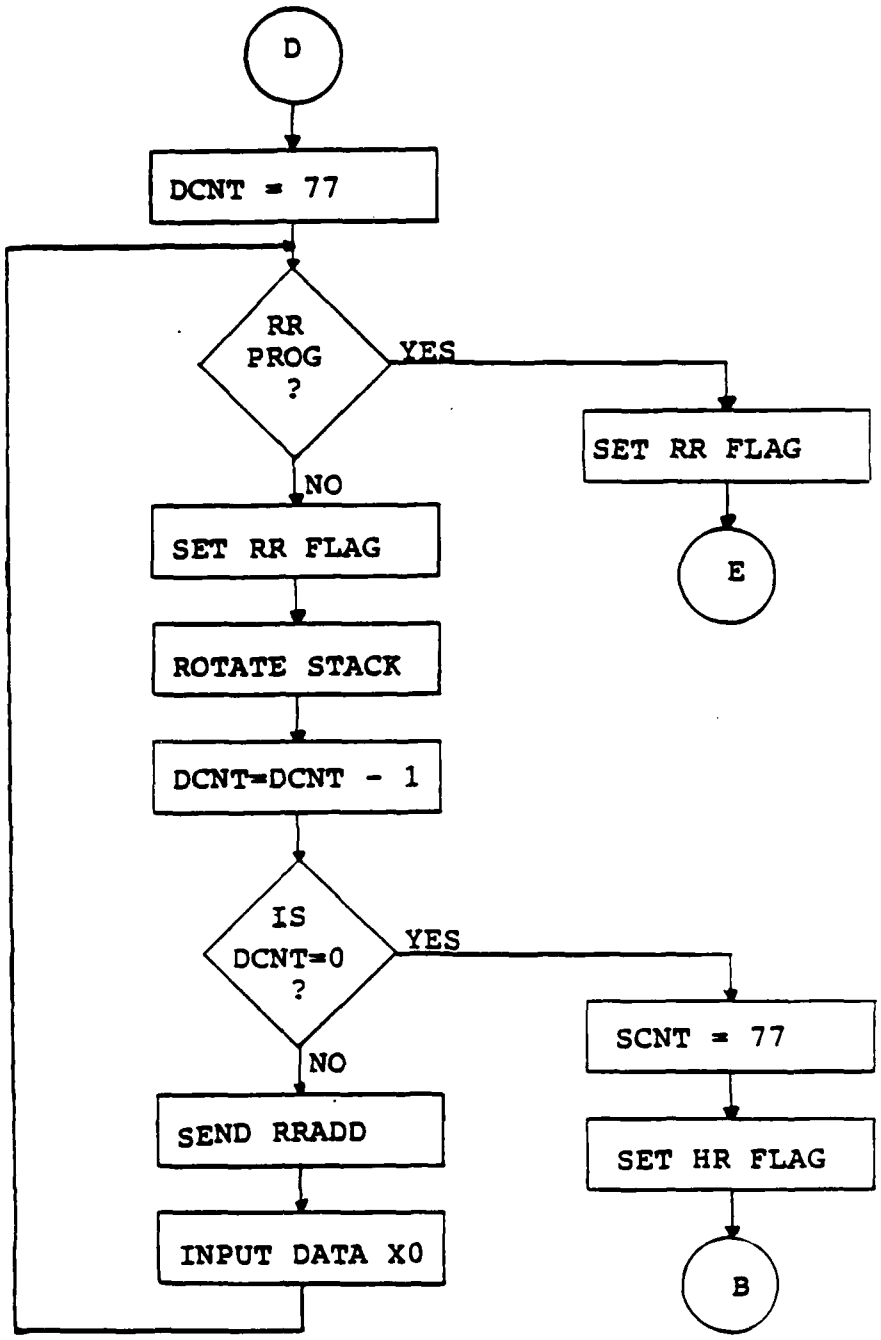

Figure 14. Detailed flow diagram for the DELAY routine. This routine reads in 300 ms of data after an R-peak is detected to reduce the possibility of detecting a T-wave as an R-peak.

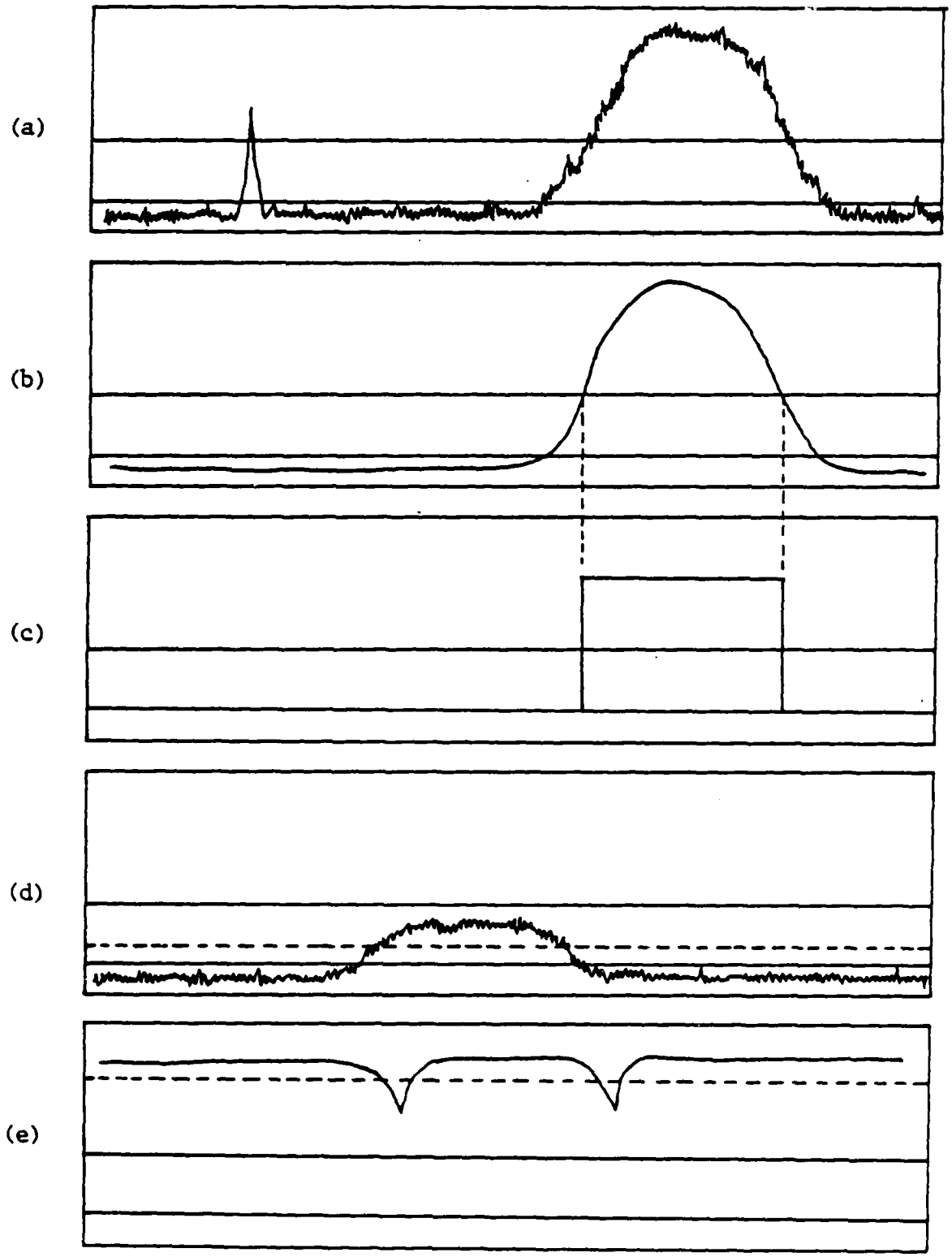

Figure 15. A typical respiratory envelope signal.

the automatic gain resets T1 to a lower level T1. The other extreme in the respiratory envelope RR detection is rapid breathing (Fig. 15e). In this case, the software program considers the entire respiratory envelope signal to be in saturation. To solve this problem a unity gain mode is implemented and T1 is reset to 100 below the present maximum value of the signal.

SMOOTH Routine

The smoothing routine (SMOOTH) contains two different digital smoothers, a median smoother and an exponential smoother. A median smoother has the desirable property of eliminating noise spikes (glitches), but not smoothing out sharp discontinuities. By empirical studies, a 31-point median smoother was chosen. This means the median value of the 31 most recent data points is the value output by the smoother. The median smoother is able to completely smooth out any noise glitches which are less than 16 samples in duration.

An exponential smoother follows the median smoother. Exponential smoothers perform a weighted moving average with the advantage that only the present point and the average of the history of the data have to be known. The equation for exponential smoothing is:

$$Y_n = \alpha X + (1-\alpha)Y_{n-1} \qquad (1)$$

where α represents the weighting function, X is the new data point value, and Y_{n-1} represents the previous output of the smoother. The combination of the two smoothers gives a clean respiratory envelope.

Figure 16 shows flow diagram for the two smoothing routines. The median smoother uses a 31-point rotating stack to input RR data. The stack is rotated and the address of the HR data is sent to the multiplexer. Then, a respiratory envelope data sample is input to the top of the median stack.

The A/D converter outputs digital values between 0 and 4096 which means the numbers are always less than 12 bits. Because of the limit of available memory, the median stack could not be duplicated to find the median. Thus, the median stack has to be kept intact while simultaneously finding the median. To accomplish this routine the 15th bit of every element in the stack is initially set, scaling all of the data by the same amount. A median counter counts to 17 which represents the 17th largest value has been found or the median.

The routine chooses the last element in the stack as the maximum value and stores this value as well as the memory location. An auxiliary register decrements through the stack and the maximum value in the stack is found along with the corresponding memory location. The routine removes the 15th bit from the maximum value found and restores the maximum value in the original location in the stack. Since the 15th bit was removed this value is now the smallest value in the stack. The routine checks the median counter and repeats if the median has not been found.

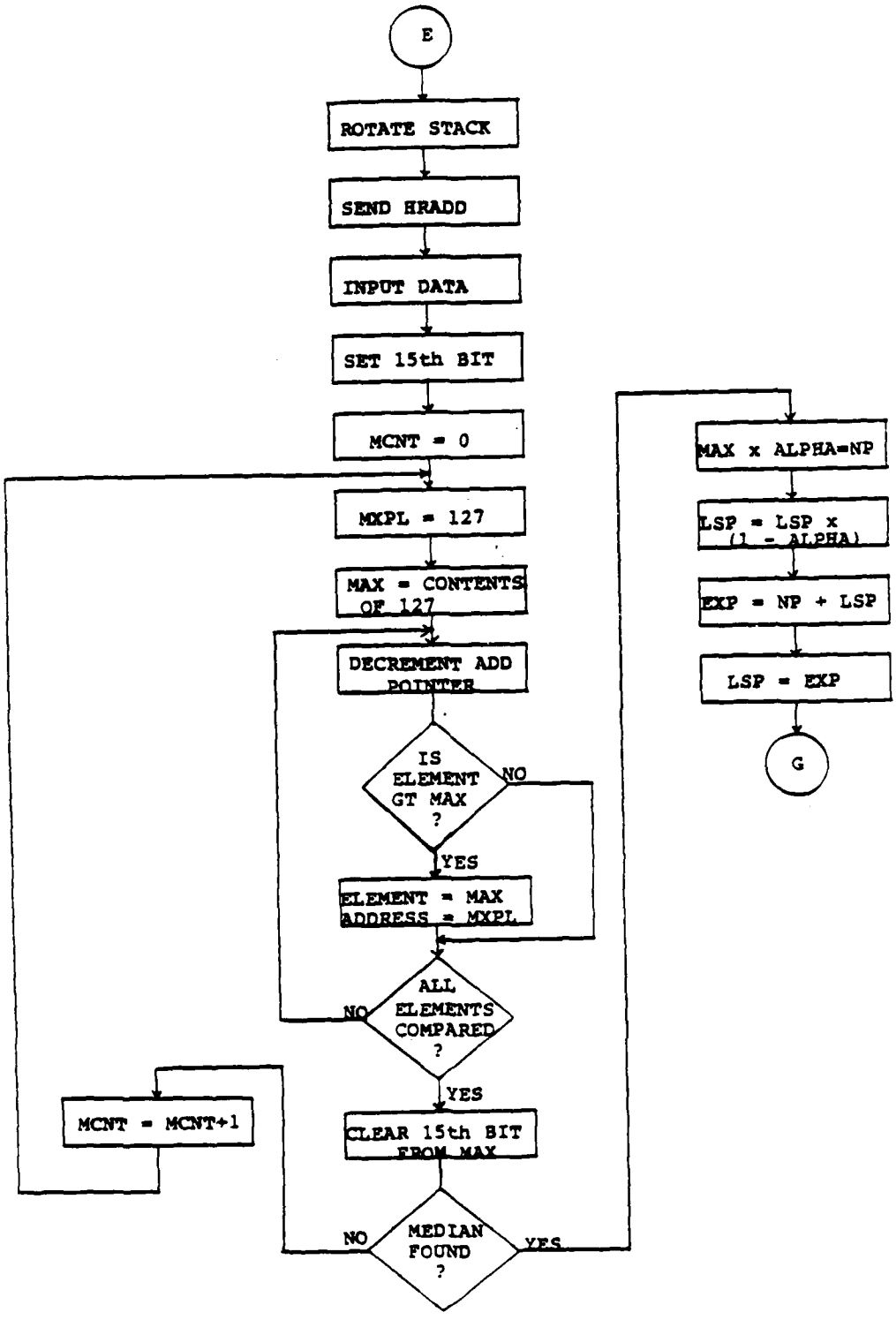

Figure 16. Detailed flow chart of the digital smoothing routine, SMOOTH. This chart shows a median smoother diagram and an exponential smoother.

The exponential smoother follows the median smoother. The flow diagram (Fig. 16) is a straightforward implementation of the equation. The output of the median smoother is multiplied by alpha (.2), and stored in the variable NP. The previous output of the smoother, the variable LSP, is multiplied by -1 alpha (.8), added to the value of NP, and stored as the output in the variable EXP. The variable EXP is also stored as LSP for the next iteration. The variable EXP is passed to the automatic gain routine.

AUTOGAIN Routine

The automatic gain routine (AUTOGAIN) has two modes, saturation and unity. If the subject's breathing pattern is normal or shallow (Fig. 15b and Fig. 15d), the routine uses saturation mode. This means if a sample of data exceeds a 0.85 V software level, the sample is assigned the value 4096 or 5-V, and if a sample of data does not exceed this software level the sample is assigned the value zero. Thus, the respiratory envelope appears as a square pulse train in saturation mode. If the subject is breathing rapidly (Fig. 15e), the gain is adjusted to unity gain (amplification of 1) mode since all of the data exceeds the software level. If the unity gain mode was not used, rapid breathing would be impossible to detect.

Figure 17 shows the flow diagram for the AUTOGAIN routine, as well as the gain adjustment routines. The AUTOGAIN routine constantly monitors the maximum value of the output of the smoothers, and stores this value in the variable MX. This variable is used to adjust the gain mode during rapid breathing. The routine checks the gain mode. If the routine is in unity gain mode the variable EXP is not altered. If the routine is in saturation mode the value of EXP is compared to an adjustable software level called T1. If the value of EXP exceeds the value of T1, EXP is assigned the value 4096, otherwise, EXP is assigned the value zero. At the end of the AUTOGAIN routine the 15th bit is removed from all the elements in the median stack.

The gain adjustment routines are called out of the RRDETECTION routine. If an inspiration or expiration is not detected in 3-s, the program adjusts the gain. In the case of shallow breathing the software level variable T1 is reduced from 700 (.85 V) to 200 (.25 V), and the program continues in saturation mode. For rapid breathing the program sets the variable T1 to 100 less than the maximum value (MX) from the AUTOGAIN routine, and the program switches to unity gain mode.

RRDETECTION Routine

The RRDETECTION routine determines the number of samples in an inspiration or expiration. The number of samples is passed to the RROUTPUT routine for respiratory rate calculation and display output.

Figure 18 shows the flow diagram for the RRDETECTION routine. The routine consists of four subroutines: Routine 0 and Routine 1 are used for initialization, and Routine 2 and Routine 3 are used to detect the

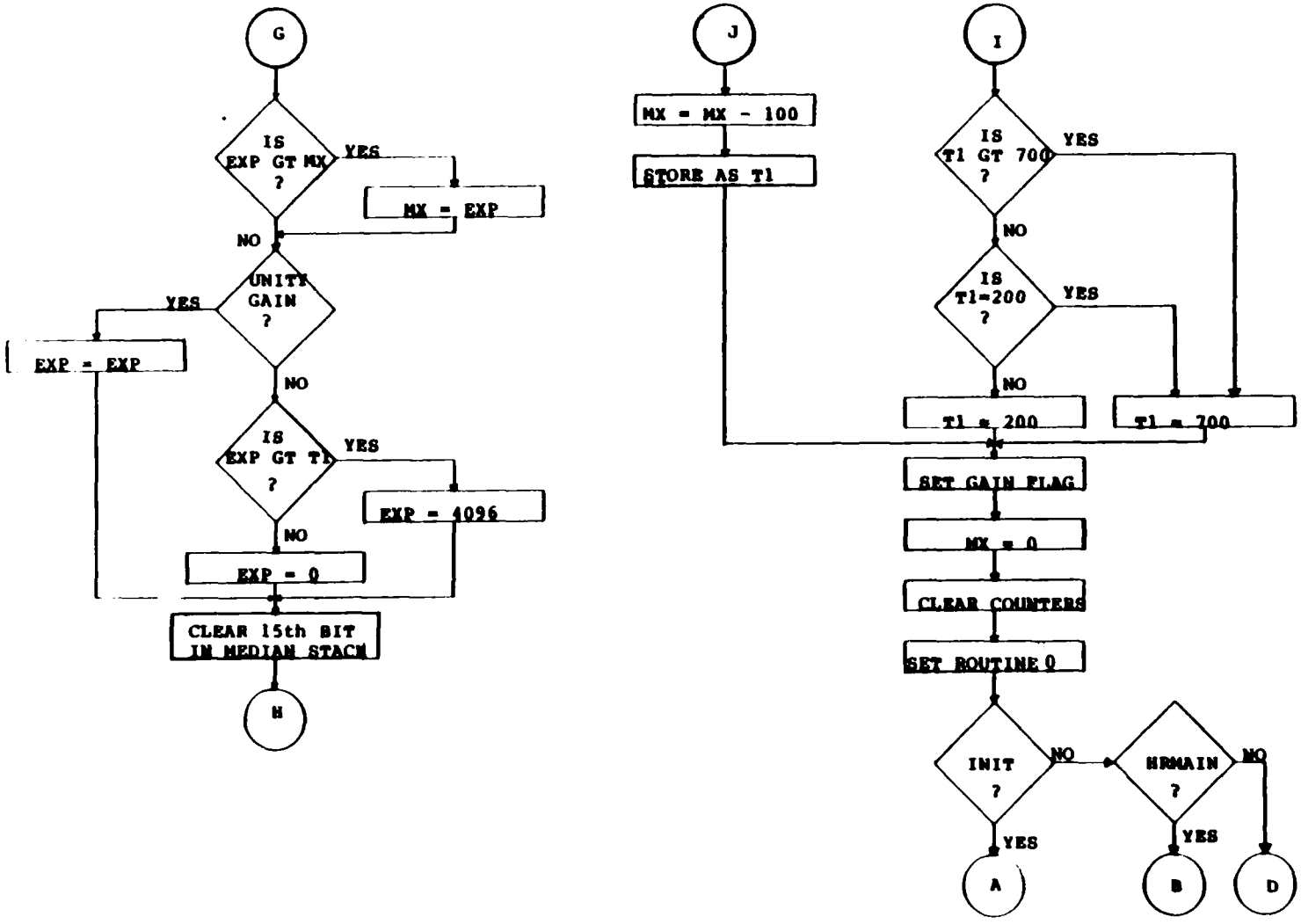

Figure 17. Detailed flow diagram of the automatic gain routine, AUTOGAIN.

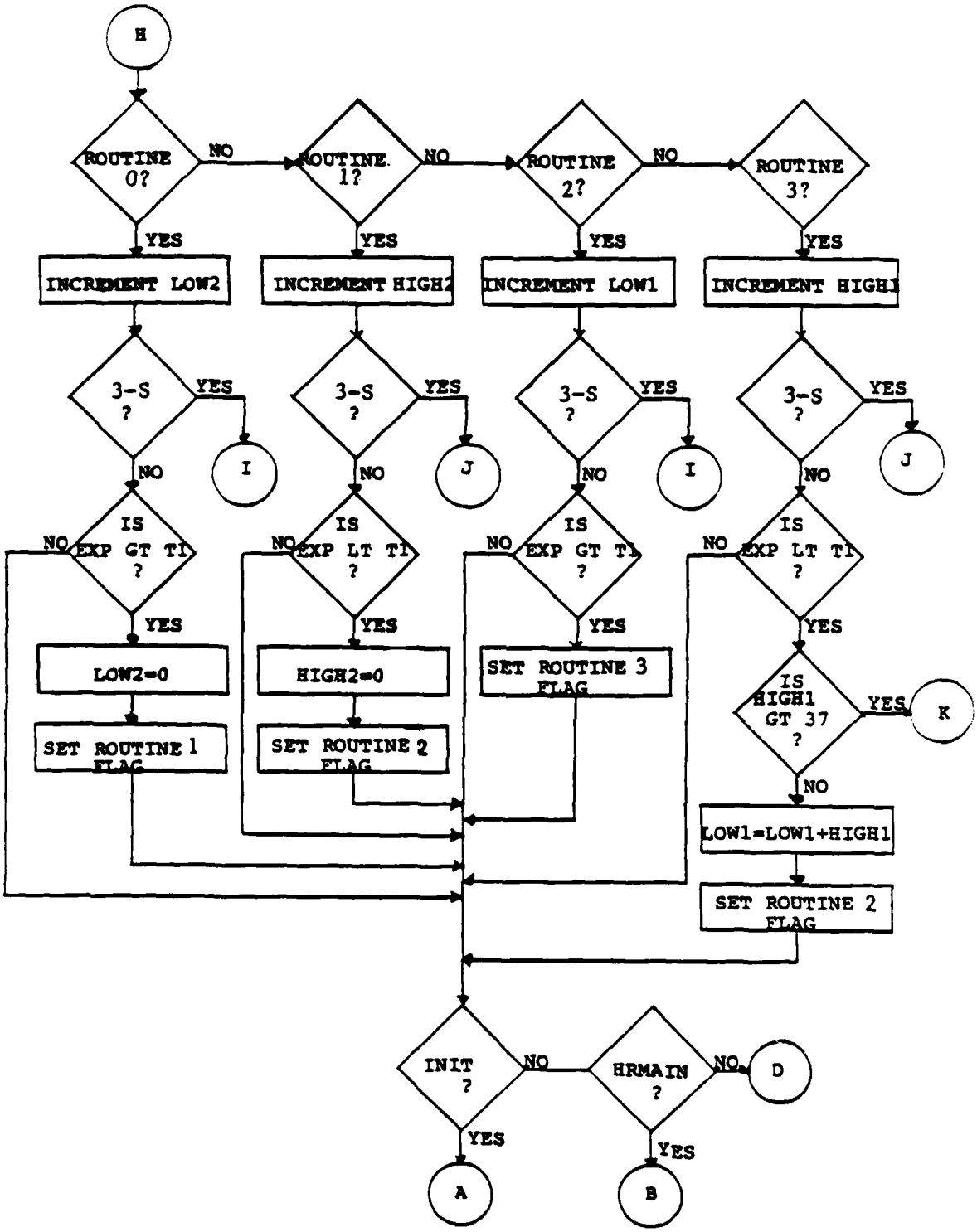

Figure 18. Detailed flow diagram of the respiratory envelope detection routine, RRDETECTION. This routine counts the number of samples in an inspiration or expiration.

respiratory envelope. Routine 0 executes first and begins by incrementing a sample counter LOW2. If the value of LOW2 is greater than 768 (the number of samples in 3 s), the subroutine branches to adjust the gain. This adjustment occurs during shallow breathing. If 3 s has not elapsed, the value of EXP is compared with T1. If the value of EXP exceeds the value of T1, the counter LOW2 is zeroed and a flag is set for Routine 1, and the program returns to the appropriate HR routine. If the value of EXP is less than the value of T1, the program checks the HR program flags and returns to the appropriate HR routine.

Routine 1 determines when the respiratory envelope becomes smaller than the software level T1. If the data does not become smaller than the value of T1 in 3 s, the program branches to adjust the gain. This adjustment occurs during rapid breathing. The program switches the AUTOGAIN routine to unity mode, resets the software level T1, and checks the value of EXP. If the value of EXP is greater than T1, the program checks the HR flag and returns to the appropriate HR routine. If the value of EXP is less than the value of T1, the sample counter HIGH2 is zeroed, the flag is set for Routine 2, and the HR routine flags are checked. After Routine 0 and Routine 1 have executed, the program is assured that Routine 2 will begin at a breath.

Routine 2 is similar to Routine 0. A sample counter LOW1 is incremented and compared to the number 768 (the number of samples in 3 s). If the value of LOW1 is larger, the program adjusts the gain by lowering the software level T1. If 3 s has not elapsed, the subroutine checks the value of EXP. If the value of EXP is less than the software level T1, the HR flags are checked and the program branches to the appropriate HR routine. If the value of EXP is larger than the value of T1, the flag is set for Routine 3. The variable LOW1 is not zeroed, because the value of LOW1 is used to compute the respiratory rate.

Routine 3 is similar to Routine 1. A sample counter HIGH1 is incremented and compared to 3 s worth of samples (768). If the value of HIGH1 is larger, the program assumes rapid breathing and adjusts the gain accordingly. If the value of HIGH1 is less, the value of EXP is compared to the value of T1. If the value of EXP is less, the program checks the HR routine flags and returns control to the appropriate HR routine. If the value of EXP is larger, the program checks the value of HIGH1. If HIGH1 is 37 or less, the program assumes the data was a noise glitch, not a valid inspiration or expiration. The number of samples in the noise glitch is added to the counter LOW1, and the flag for Routine 2 is set. Checking the value of HIGH1 decreased the number of false breaths detected. All of the subroutines end by checking the HR flags and returning control to the proper HR routine.

RROUTPUT Routine

The respiratory rate is calculated and output in the RROUTPUT routine. The number of samples in an inspiration or expiration found in RRDETECTION is used to calculate the respiratory rate. The number of samples in the

two most recent inspirations and expirations are used to compute an average breathing rate which is sent to the display.

Figure 19 shows the flow diagram for the RROUTPUT routine. The value of LOW1 and HIGH1 are added together. The sum (RTOT) represents the number of samples in an inspiration or expiration. The variables LOW1 and HIGH1 are cleared. If the variable RTOT represents the first expiration or inspiration, the rotating stack for averaging 2 breaths is filled with the value of RTOT. The rotating stack is summed and stored in the variable RESP. The number 30720 is divided by the value of RESP to determine the respiratory rate. The number 30720 represents 2 breaths times 256 samples/second times 60 s/min.

After the respiratory rate is computed, the program converts the digits to ASCII code and outputs them to the display. The respiratory rate is divided by 10. The quotient is the tens digit and the remainder is the ones digit. To convert to ASCII code 70 hexidecimal is added to each digit. If the quotient is zero, then a blank is sent for the tens digit.

After the digits are converted to ASCII code the address of the tens digit on the display is sent to the LCD display. A delay follows to allow enough time for the LCD controller to latch in the data. The tens digit is sent to the display followed by a delay. Then the ones digit is sent followed by a delay. The address automatically increments; therefore, no address has to be sent before outputting the ones digit. After both digits are output, the routine checks the HR flags and returns control to the appropriate HR routine.

CALIBRATION AND TESTING PROCEDURE

Calibration and testing of the vital signs rate meter are performed separately on each analog and digital circuit. Calibrations required by the ECG circuit are offset adjustment of the impedance matching and CMRR stage, gain setting of CMRR stage, offset adjustment of the MF6-50 chip, and balancing of the fullwave rectifier stage. The output level from the level-shifting stage is set during testing procedure. The two calibrations performed on respiration sound envelope circuit are gain setting of the amplifying stage and low-pass filter corner frequency setting for the envelope generation stage. Digital circuit calibrations include setting the sampling clock rate, adjusting of the S/H stage offset, and setting the display contrast. The test equipment, cables, special connectors, and test signals required for each calibration are discussed in each calibration section.

ECG Circuit Calibration

A special calibration connector is required for the calibration process of the ECG circuit. The calibration connector is a female connector which mates with the input male connector J1 of the ECG circuit. The two active input pins (pins 1 and 5, counting from left to right) of the female

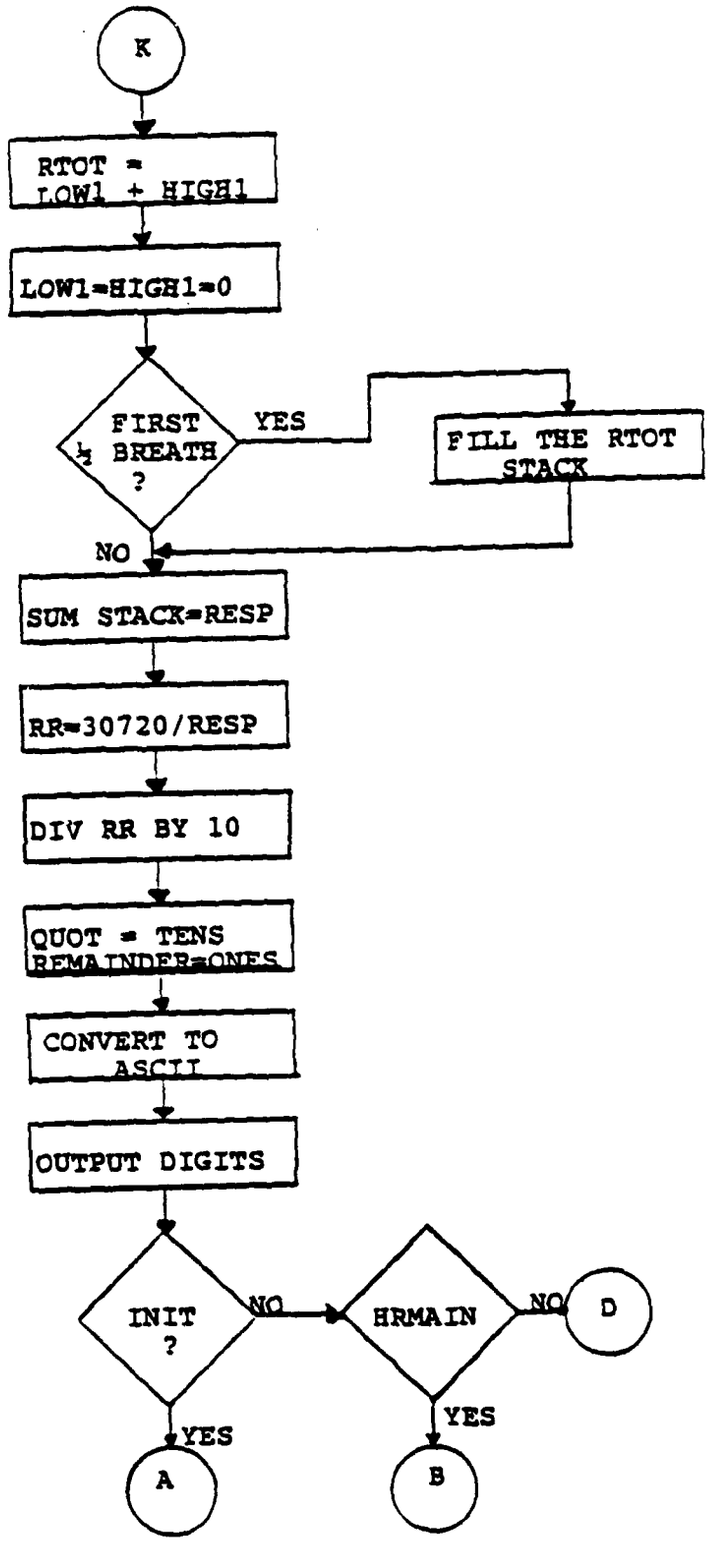

Figure 19. Detailed flow diagram of the respiratory rate output routine RROUTPUT. This routine uses the number of samples found in the PPDETECTION routine to calculate the number of breaths/minute. Two breaths are averaged and output to the display.

connector are connected together by a wire which is as short as possible to reduce effects of static charge. The middle of the wire is exposed to allow attachment of test lead or jumper wire. The indifferent input (pin 3) and reference (pin 2) are connected together in a similar manner. Test equipment for this calibration includes:

(1) DC power supply or battery pack which provides ±18 V, and ±6 V.
(2) Power cable with female connector which mates with the male power plug on the ECG circuit at one end and connector that mates with the power supply on the other. The pin assignment for the female connector is: pin 2 (left-to-right) = -18 V, pin 4 = +18 V, pin 5 = -6 V, pin 7 = +6 V, and pin 8 = reference. All other pins are not connected.
(3) Oscilloscope with 1 mV/div resolution and dual trace capability.
(4) Waveform generator which can provide stable, noise-free sinusoidal output from 0.01 V_{p-p} and frequency range cover 60 Hz with associate cable that has hooks at one end.

The test points and components of this calibration are shown in Figure 4.

Offset Adjustment of Impedance Matching and CMRR Stage

The ECG circuit is powered by the ±15 V supply from the voltage regulators on the digital circuit board. The output of the voltage regulator varies from chip to chip. It is essential that calibration of the ECG circuit be accomplished with the ±15 V provided by the voltage regulators on the digital board. First, plug the power pins of the ECG board into the power socket of the digital circuit board. Plug the special connector into the input jack connector (J1). Short the two connection wires on the special connector together with an alligator clip. Attach the oscilloscope (times 1) probe to test point 1 (TP1) with the ground of the probe attached to circuit ground at test point (TPG). Set the oscilloscope to 0.2 V/div and adjust potentiometer VR1 until the output of amplifier A1 is trimmed to zero volt. Increase the sensitivity of the oscilloscope to 50 mV/div and readjust the output of A1 to zero volt. Repeat this process with higher sensitivity until the oscilloscope sensitivity of 1 mV/div is reached. The final adjustment should have the oscilloscope trace center on the zero or ground reference of the oscilloscope. At each repeating step, care must be taken to ensure that true ground reference is used as zero. The offset adjustment procedure is repeated for amplifiers A2, A3, A4, and A5. The monitoring points are TP2, TP3, TP4, and TP5 with corresponding adjustments at potentiometers VR2, VR3, VR4, and VR5, respectively. This adjustment completes offset adjustment for the impedance matching and CMRR stage. Remove the alligator clip for the next calibration procedures.

CMRR Gain Setting and CMRR Adjustment

A small signal level (0.01 V), noise-free waveform generator is required for gain adjustment for the CMRR stage. The active lead of the waveform generator is connected to the common wire of pin 1 and pin 5 of the special connector, and the reference lead of the waveform generator is connected to the common wire of pin 2 and pin 3. Set the frequency of the waveform generator at 60 Hz with the output voltage level at 0.02 V_{p-p}. Outputs of

amplifiers A4 and A5 are monitored simultaneously at test points TP4 and TP5 respectively. To facilitate proper calibration of identical gain setting, the zero reference of both traces of the oscilloscope are set to the same level. Adjust the magnitude of amplifiers A4 and A5 outputs to 2 V_{p-p} (gain of 100) or until both traces completely overlap. After the gains of amplifiers A4 and A5 are set, move one of the oscilloscope probes to test point TP6 to calibrate amplifier A6 for maximum CMRR. Set the oscilloscope to trigger from the other channel. Adjust the potentiometer VR8 to reduce the amplitude of amplifier A6 output as much as possible. The gain setting and maximum CMRR calibration are critical to the successful ECG signal detection in a high electro-magnetic noise environment. Gain and CMRR procedures should be performed with great care.

Offset Calibration of MF6-50 Chip

Offset calibration of the MF6-50 chip is carried out with amplifiers A7 and A8 (LM348(1)) physically removed from ECG circuit to avoid damaging the LM348 chip. The input to MF6-50 chip (TP7) is grounded to power reference. The output of MF6-50 chip is monitored at TP8. Adjust the output of MF6-50 chip to zero volt by varying potentiometer VR9. The oscilloscope should be set to the most sensitive scale. This setup is kept for calibration of the full-wave rectifier stage.

Balancing of Full-wave Rectification Stage

The full-wave rectifier is balanced with amplifiers A7 and A8 removed from the ECG circuit. Remove the ground from TP7 and replace it with an active lead of waveform generator. Set the frequency of the sinewave generator at 20 Hz with an amplitude of 20 mV_{p-p}, and monitor test point TP9 (pin 8 of A9). Adjust the potentiometer VR10 to obtain equal amplitudes of the positive half waves. This step completes the calibration of the ECG circuit. The LM348(1) chip removed for this calibration should be reinstalled. The next step is to adjust the output reference level and test the dynamic performance of the circuit.

Adjustment of Output Reference Level and Testing

Testing of the ECG circuit is performed on the calibrated board. The output of the ECG board is connected to the digital board by ribbon cable at connector jacks J2 and J3. The sensor array is connected to the ECG circuit through the input jack (J1) and is placed flush on the trachea below the pomum adami ("Adam's apple"). Steady and firm contact with the skin should be maintained at all times during testing. After the signal at TP10 has settled down to a rectified ECG waveform, the baseline of the output level is lowered by varying potentiometer VR11 of amplifier A10 until the noise level is completely below zero volt.

Calibration of Respiratory Sound Envelope Circuit

Calibration of respiratory sound envelope circuit does not require a special connector. The test equipment required for this calibration is the

same as that of ECG circuit. The frequency range required from the waveform generator is 100 Hz to 1 kHz. The respiratory sound circuit is shown in Figure 5.

Gain Setting of Amplification Stage

Connect the active lead of the waveform generator to test point TP11 (pin 6 of amplifier A11) of the respiratory sound envelope circuit, and remove amplifier A11 from the circuit. Set the frequency of the waveform generator to 400 Hz with an amplitude of 0.01 V_{p-p}, and monitor test point TP12 (pin 14 of amplifier A14). Adjust the output of A14 to give 1.3 V_{p-p} by varying potentiometer VR14.

Corner Frequency Setting of Envelope Generation Stage

Attach the active lead of the waveform generator to TP13. Set the output of the generator to give a positive going wave at all times with an amplitude of 2 V_{p-p} and the frequency at 8 Hz. The corner frequency of the low-pass filter is adjusted by varying potentiometer VR13 until the output at test point TP14 is 1.4 V_{p-p} or 0.707 of the peak value (-3 dB).

Level-shifting Setup and Dynamic Testing

After completion of calibration, return amplifier A11 to its socket. Plug the connector of the microphone element into the input jack (J4). Place the sensor array on the trachea flush with the surface of a subject's skin, and ask him to breathe normally. Monitor the output level of the respiratory sound envelope at TP15 (pin 1 of LM348(2)). Adjust the level of the baseline by varying potentiometer VR14 such that the noise level is below the zero reference line when the breathing sound is minimal. This action completes the calibration and testing of the ECG and respiration analog circuits.

Calibration of Digital Circuit

Calibration of the digital circuit does not require any special connector. The test equipment used in calibration of the digital circuitry are the DC power supply (same equipment used for the analog circuits) and a frequency counter which has a range from 100 Hz to 1000 Hz.

Sampling Clock Adjustment

With the frequency counter, monitor test point TP18 (pin 3 of LM555 semiconductor (U6)), and adjust the sampling clock pulse to 512 pulses/second by varying the potentiometer VR16, if the LM555 semiconductor is warmed up (Fig. 6). The clock rate may increase slightly as the LM555 semiconductor warms up.

Zero Offset of S/H Chip

To calibrate the zero offset of the sample-and-hold chip (U2), the multiplexer chip (U1) should be removed from the circuit board and the test point TP16 (pin 3 of U2) should be grounded. Monitor test point TP17 with an oscilloscope and adjust the output of the S/H (U2) so that the waveform is zero during the hold period by varying potentiometer VR15.

LCD Display Contrast Setup

The final adjustment is setting the contrast of the LCD to a functional level (maximum contrast). This action is accomplished by observing the LCD display while varying the potentiometer VR17 (Fig. 8). The display should be viewed from an angle of approximately 45 degrees from the surface of the electronics case.

OPERATING PROCEDURES

The vital signs rate meter consists of three major parts: the sensor handle, the electronics case, and the power supply. Power for the electronics consists of two 12-V and three 6-V lantern batteries encased in a canvas carrying bag with an over-the-shoulder strap. The batteries are connected to the electronics case by a 5-lead cable with 5-pin Amphenol connectors at each end. The sensor handle is connected to the electronics case with an 8-pin Philmore microphone connector. Both cables must be connected before the rate meter may be used.

Operator techniques, although simple, can lead to poor data acquisition and erroneous readings. We recommend that the rate meter be turned on by the on-off, single-pole, double-throw switch on the front panel of the electronics case. Then the reset/start button (red) is depressed and released to initialize the system. This action is followed immediately by depressing and releasing the display hold button (black). Following these two actions, the liquid crystal display should show "HR: RR:" and a blinking square cursor at the right side of the display.

The sensors should be held firmly and steadily at the lower portion of the trachea to ensure that the electrodes are flush (flat) to the surface of the skin and the microphone is in the center of the trachea below the Adam's apple. Once the sensors are in place, the operator depresses and releases the reset/start button to begin collection of data. The first rate readings will appear within 8 to 10 s. During the data collection the operator must ensure that the sensor array is maintained perfectly still, otherwise motion artifact will be introduced by the operator.

The display reading will continue to be updated about every 3 to 5 s until the operator depresses the display hold button. This action completes and stops further processing of data while holding the current numbers in display indefinitely. Upon completion of vital signs measurement, the on-off switch should be placed in the off position.

CONCLUSION

The primary goal of designing and fabricating a field instrument to measure the rates of the two primary vital life signs, heart and respiration, was completed under this contract. The vital signs rate meter breadboard prototype is the basis for a biomedical instrument to provide classification of respiratory function, heart valve function, as well as rate information.

REFERENCES

1. Laennec, R. T. H. A Treatise On The Disease Of The Chest And Mediate Auscultation. Translated from the French edition by John Forbes. Samuel Wood and Sons, New York, 1935.

2. Bunin, N. J. and R. G. Loudon. Lung sound terminology in case reports. Chest 76:690-692, 1979.

3. Charbonneau, G., J. L. Racineux, M. Sudraud,and E. Tukchais. An accurate recording system and its use in breath sounds spectral analysis. J. Appl. Physiol. 55:1120-1127, 1983.

4. Dosani, R. and S. S. Kraman. Lung sound intensity variability in normal man. Chest 84:628-631, 1983.

5. Fletcher, H. and W. A. Munson. Loudness, its definition, measurement and calculation. J Acoust S Am 5:82-108, 1933.

6. Forgacs, P. Lung Sounds. London: Bailliere Tindall, 1978.

7. Leblanc, P., P. T. Macklem, and W. R. Ross, Breath sounds and distribution of pulmonary ventilation. Am. Rev. Resp. Dis. 102:10-16, 1970.

8. Lessard, C. S. and W. C. Wong, Correlation of Constant Flow Rate with Frequency Spectrum of Respiratory Sounds When Measured at the Trachea. IEEE Trans. Biomed. Engr. 33:461-463, 1986.

9. Lessard, C. S. and W. C. Wong, Discriminant Analysis of Respiratory Sounds of Pulmonary Insufficient Patients and Normal Subjects, USAFSAM-TR-86-33, October 1986.

10. Lessard, C. S., W. C. Wong, S. Mesibov, and M. Jones, Effects of Heart Valve Sounds on the Frequency Spectrum of Respiratory Sounds, Innovation Et Technologie En Biologie Et Medicine, in review, 1987.

11. Lessard, C.S., and W.C. Wong. Evaluation of Noninvasive Measurement Methods and Systems for Application in Vital Life Signs Detection:Part I. USAFSAM-TR-85-44-PT-1, March 1986.

12. Lessard, C.S., and W.C. Wong. Evaluation of Noninvasive Measurement

Methods and Systems for Application in Vital Life Signs Detection:Part II. USAFSAM-TR-85-44-PT-2, March 1986.

13. Abbot, J., M. Gifford, C. Chipman, J. Englken, and P. Rosen. Protocols for Prehospital Emergency Medical Care. Baltimore: Williams and Wilkins Co., 1980.

14. American Academy of Orthopaedic Surgeons. Emergency Care and Transportation of the Sick and Injured, Third Edition. Menasha, Wis: George Bauta Co., Inc., 1981.

15. Flint, T., and H.D. Cain. Emergency Treatment and Management, p. 688. Philadelphia: W.B. Saunders Co., 1975.

16. Eisenbert, M.S., and M. Copass. Manual of Emergency Medical Therapeutics. Philadelphia: W.B. Saunders Co., 1978.

17. Hafen, B.O., and K.J. Karren. Prehospital Emergency Care and Crisis Intervention. Englewood, Colo: Morton Publishing Co., 1981.

18. Sacco, W., H. Champion, and M. Stega. Trauma Care Evaluation. University Park Press, 1984.

19. Champion, H., W. Sacco, and T. Hunt. Trauma Severity Scoring to Predict Mortality. World J Surg. 7:4-11, 1983.

20. Sacco, W., and H. Champion. Trauma Injury Severity Scales. Current Emergency Therapy. Appleton-Century-Crafts, 1984.

21. Olson, W. H., D. R. Schemincke, and B. L. Henley. Time and Frequency Dependence of Disposable ECG Electrode-Skin Impedance. Med Instrum 13:269-272, 1979.

END
JAN.
1988

DTIC