AD-A169 575 TSAR (THEATER SIMULATION OF AIRBASE RESOURCES) DATABASE DICTIONARY F-4E(U) ORLANDO TECHNOLOGY INC SHALIMAR FL D ROBINSON ET AL. 28 MAR 86 1/4

UNCLASSIFIED F/G 5/2 NL

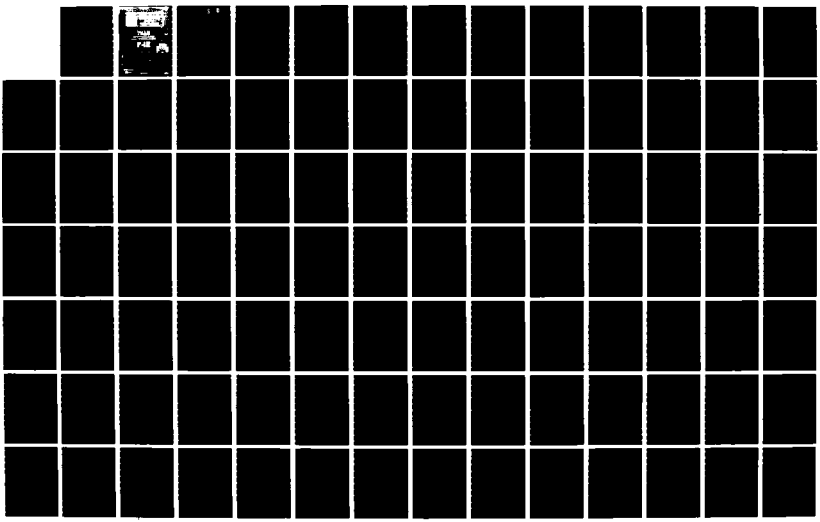

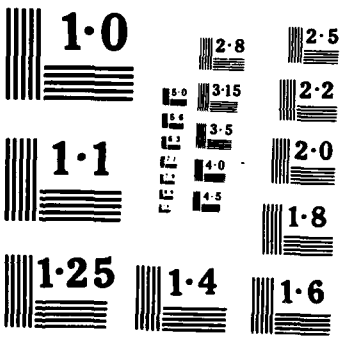
1·0
2·8
2·5
3·15
2·2
3·5
1·1
2·0
4·0
4·5
1·8
1·25
1·4
1·6

AD-A169 [illegible]75

[illegible]

F-4E

28 MARCH 1986

Prepared for
TACTICAL SUPPORT DIVISION
Air Force Center for Studies and Analyses
Pentagon, Washington, D.C. 20330-5420

Prepared by
ORLANDO TECHNOLOGY, INC.
P.O. Box 855
Shalimar, Florida 32579

DTIC FILE COPY

DISTRIBUTION STATEMENT A
Approved for public release;
Distribution Unlimited

UNCLASSIFIED

86 7 [illegible]

DTIC
ELECTE
JUL 09 1986
S D
D

(2)

PREFACE

The Assistant Chief of Staff for Studies and Analyses (AF/SA) has a continuing requirement for investigations into advanced fighter aircraft operations and support topics. A recurring need involves studies of readiness, survivability, and sustainability. Several methodologies have been used over the years. The current state-of-the-art techniques for these purposes are two Monte Carlo simulation models developed in the late 1970s by The Rand Corporation, Theater Simulation of Airbase Resources (TSAR) and TSAR Inputs using Airbase Damage Assessment (TSARINA). These models, like other simulation models, are build to study and analyze a system's processes. In this case the "system" is the collection of resources called an airbase and the process of interest is the interaction of those resources resulting in the generation of aircraft sorties. A system's problem can often be described and studied through "what if" excursions about a defined base case. The base case and the excursions of interest could be viewed as related problem scenarios. In both TSAR and TSARINA the scenario to be studied is modeled through the database. Therefore the analyst must know the logic embodied in the program structure, but most importantly, completely understand the scenario as described in an extensive database. The differences between scenarios involving the same aircraft type may only involve changing several cards, but building the components of the baseline database and/or acquiring sufficient understanding of what is contained in such a database are significant tasks. Hence the need for a disciplined development and adequate documentation. Given that a baseline database exists, the modeler must replace, merge, or modify various database segments to fashion a new scenario or to specify excursions from the base case. Alternative data segments which are clearly documented are therefore often needed. The availability and limited documentation of databases for both TSAR and TSARINA impose practical limitations to their usefulness.

The author of TSAR and TSARINA, Don Emerson, has provided analysts with extremely powerful tools for tactical support analysis. They are very well written and documented. The real problem for the analyst is locating sources of data to make use of the full richness inherent in the models. It was clear to those of us at the Air Force Center for Studies and Analyses (AFCSA) that if our results and observations were going to be credible, the databases and assumptions they embodied would need to be documented. Our intent was to collect selected databases within AFCSA to support current and projected studies. Quality documentation of these databases was necessary to permit analysts to understand the assumptions, limitations, and level of detail that was being portrayed. The resultant availability of databases and standardization of documentation will not only directly support in-house investigations but will also facilitate studies across the analysis community. Because of the scope of such a task, a contract was let to ensure its timely accomplishment.

Orlando Technology, Inc., was awarded a competitive contract for TSAR/TSARINA support tasks. The tasks focus around the model databases and database segments. They began with the existing model databases and updated them based on the most current government data available. These databases were to be documented in three ways. The first is a dictionary for each database and separate database segment, which translates the database codes to their English equivalents. Secondly, graphic network models are needed for those portions of the database which model decision logic networks for repair tasks. And finally,

DISTRIBUTION STATEMENT A
Approved for public release;
Distribution Unlimited

an index is needed to cross-reference the database segments, dictionary, and the network models to facilitate their use by modelers and analysts. This F-4E database dictionary incorporates all three into a single document. The long term intent is to build on these basic databases by the use of a database management system to facilitate changes, updates, and analysis scenario development. As the models mature and the user community grows, the model databases will continue to evolve and grow in depth and breadth. This document should be viewed as an advanced prototype which will hopefully continue to mature and increase in usefulness.

Our hope is that you will wear out this document through constant useage. Pass along your comments and criticisms so that future improvements can incorporate the user community's collective insights.

JOHN R. FOLKESON, Lt Col, USAF
AFCSA/SAGP
Washington, DC 20330-5420

UNCLASSIFIED
SECURITY CLASSIFICATION OF THIS PAGE

REPORT DOCUMENTATION PAGE

AD-A109575

1a. REPORT SECURITY CLASSIFICATION UNCLASSIFIED	1b. RESTRICTIVE MARKINGS
2a. SECURITY CLASSIFICATION AUTHORITY	3. DISTRIBUTION/AVAILABILITY OF REPORT Unlimited Distribution
2b. DECLASSIFICATION/DOWNGRADING SCHEDULE	
4. PERFORMING ORGANIZATION REPORT NUMBER(S)	5. MONITORING ORGANIZATION REPORT NUMBER(S)
6a. NAME OF PERFORMING ORGANIZATION Orlando Technology, Inc. 6b. OFFICE SYMBOL (If applicable)	7a. NAME OF MONITORING ORGANIZATION Tactical Support Division Air Force Center for Studies and Analyses
6c. ADDRESS (City, State and ZIP Code) P.O. Box 855 Shalimar, Florida 32579	7b. ADDRESS (City, State and ZIP Code) AFCSA/SAGP Pentagon, Rm 1C370 Washington DC 20330-5420
8a. NAME OF FUNDING/SPONSORING ORGANIZATION AF Center for Studies and Analyses 8b. OFFICE SYMBOL (If applicable) AFCSA/SAGP	9. PROCUREMENT INSTRUMENT IDENTIFICATION NUMBER
8c. ADDRESS (City, State and ZIP Code) AFCSA/SAGP Pentagon, 1C370 Washington DC 20330-5420	10. SOURCE OF FUNDING NOS. PROGRAM ELEMENT NO. / PROJECT NO. / TASK NO. / WORK UNIT NO.
11. TITLE (Include Security Classification) TSAR Database Dictionary - F-4E	
12. PERSONAL AUTHOR(S) Dale Robinson, Cliff Gornto	
13a. TYPE OF REPORT Final 13b. TIME COVERED FROM 8/1/85 TO 7/31/86	14. DATE OF REPORT (Yr., Mo., Day) 860328 15. PAGE COUNT
16. SUPPLEMENTARY NOTATION	
17. COSATI CODES FIELD / GROUP / SUB GR	18. SUBJECT TERMS (Continue on reverse if necessary and identify by block number) ~~TSAR, Simulation~~, Sortie Generations, Logistics, F-4E Database Dictionary, Capability Assessment, Support

19. ABSTRACT (Continue on reverse if necessary and identify by block number)

A significant problem for analysts and simulation model users is the availability of complete documentation of input databases. The Theater Simulation of Airbase Resources (TSAR) model is no exception. This TSAR dictionary documents the F-4E database by translating the database codes to their English equivalents, presents graphic network models for the decision logic networks for aircraft repair tasks, and a cross-reference index to facilitate its use by modelers and analysts.

20. DISTRIBUTION/AVAILABILITY OF ABSTRACT UNCLASSIFIED/UNLIMITED X SAME AS RPT ☐ DTIC USERS ☐	21. ABSTRACT SECURITY CLASSIFICATION UNCLASSIFIED
22a. NAME OF RESPONSIBLE INDIVIDUAL LtCol John R. Folkeson, Jr.	22b. TELEPHONE NUMBER (Include Area Code) (202) 697-0862 22c. OFFICE SYMBOL AFCSA/SAGP

DD FORM 1473, 83 APR EDITION OF 1 JAN 73 IS OBSOLETE

UNCLASSIFIED
SECURITY CLASSIFICATION OF THIS PAGE

TABLE OF CONTENTS

CHAPTER I INTRODUCTION

I.1 DATA BASE PURPOSE I-1
I.2 GENERAL DESCRIPTION OF THE DATA BASE I-1

CHAPTER II TSAR CONTROL VARIABLES

II.1 BASIC CONTROL VARIABLES (CARD TYPE #1) II-1
II.2 OUTPUT CONTROL VARIABLES (CARD TYPE #2/1) II-2
II.3 REPETITIVE RANDOM NUMBER STREAMS (CARD TYPE #2/2) II-3
II.4 SEED DATA (CARD TYPE #2/3) II-4
II.5 DEFERRED AIRCRAFT TASK REPORTS (CARD TYPE #2/4) . II-4
II.6 OUTPUT CONTROL VARIABLES (CARD TYPE #2/5) II-4
II.7 OPERATIONS CONTROL VARIABLES (CARD TYPE #3/1) . II-5
II.8 AIRCRAFT MANAGEMENT VARIABLES (CARD TYPE #3/2) . II-6
II.9 AIRCRAFT PARTS GENERATION (CARD TYPE #3/3) . . . II-7
II.10 CHEMICAL WARFARE VARIABLES (CARD TYPE #3/4) . . II-8
II.11 CHEMICAL WARFARE VARIABLES (CARD TYPE #3/5) . . II-8
II.12 MISCELLANEOUS TIME FACTORS (CARD TYPE #4/1) . . II-9
II.13 MISCELLANEOUS TIME FACTORS (CARD TYPE #4/2) . . II-10
II.14 SPARE VARIABLES (CARD TYPE #4/3) II-11
II.15 SPECIAL DTI INPUTS (CARD TYPE #4/4) II-11

CHAPTER III RESOURCE REQUIREMENTS

III.1 AIRCRAFT, PART AND SUPPORT EQUIPMENT REPAIR DATA III-1
III.1.1 SHOP DESCRIPTION LIST III-1
III.1.2 DISTRIBUTED SHOP DESCRIPTIONS (CARD TYPE #37) III-3
III.1.3 SHOP/TASK SEQUENCE DATA (CARD TYPE #29) . . . III-5
III.1.4 SHOP DATA III-7
III.1.4.1 TSAR SHOP #1 -- FLIGHT LINE III-7
III.1.4.2 TSAR SHOP #2 --AIRFRAME REPAIR III-9
III.1.4.3 TSAR SHOP #3 -- ELECTRICAL SYSTEMS III-11
III.1.4.4 TSAR SHOP #4 -- ENVIRONMENTAL SYSTEMS . . . III-13
III.1.4.5 TSAR SHOP #5 -- EGRESS SYSTEMS III-15
III.1.4.6 TSAR SHOP #6 -- PNEUDRAULICS III-16
III.1.4.7 TSAR SHOP #7 -- ENGINE III-18
III.1.4.8 TSAR SHOP #8 -- AUTOPILOT III-20
III.1.4.9 TSAR SHOP #9 -- AVIONICS INSTRUMENTATION . . III-22
III.1.4.10 TSAR SHOP #10 -- SENSORS III-24
III.1.4.11 TSAR SHOP #11 -- WHEEL/TIRE III-25
III.1.4.12 TSAR SHOP #12 -- RADIO COMMUNICATION . . . III-26
III.1.4.13 TSAR SHOP #13 -- RADAR NAVIGATION III-28
III.1.4.14 TSAR SHOP #14 -- ECM SYSTEMS III-30
III.1.4.15 TSAR SHOP #15 -- INERTIAL SYSTEMS SHOP . . III-32
III.1.4.16 TSAR SHOP #16 -- FIRE CONTROL III-34
III.1.4.17 TSAR SHOP #17 -- WEAPON CONTROL SHOP . . . III-36
III.1.4.18 TSAR SHOP #18 -- MACHINE SHOP III-38
III.1.4.19 TSAR SHOP #19 -- WELDING SHOP III-39
III.1.4.20 TSAR SHOP #20 -- CAMERA SHOP III-40
III.1.4.21 TSAR SHOP #21 -- HEAVY REPAIR SHOP III-42
III.1.4.22 TSAR SHOP #22 -- MISSILE MAINTENANCE . . . III-43
III.1.4.23 TSAR SHOP #23 -- FUEL SYSTEMS SHOP III-45
III.1.4.24 TSAR SHOP #24 -- PARACHUTE SHOP III-46
III.1.4.25 TSAR SHOP #28 -- AIRCRAFT CONFIGURATION . . III-47
III.1.4.26 TSAR SHOP #30 -- MUNITIONS MAINT/CIVIL ENG. III-48
III.1.5 TASK NETWORK DATA III-50
III.1.5.1 TASK #1 NETWORK - QTIRE -- TIRES III-50

III.1.5.2 TASK #6 NETWORK - 11100 -- FUSELAGE III-51
III.1.5.3 TASK #50 NETWORK - 11200 -- WINGS III-54
III.1.5.4 TASK #66 NETWORK - 11300 -- AIR INDUCTION SYS III-56
III.1.5.5 TASK #95 NETWORK - 12100 -- COCKPITS III-58
III.1.5.6 TASK #108 NETWORK - 12200 -- EJECTION SEATS III-59
III.1.5.7 SIMPLE TASK #119 - 12265 -- CANOPY SYSTEM . III-60
III.1.5.8 TASK #120 NETWORK - 12300 -- CANOPY SYSTEMS III-60
III.1.5.9 TASK #153 NETWORK - 13100 -- LANDING GEAR SYS III-63
III.1.5.10 TASK #177 NETWORK - 13200 -- MAIN LANDING . III-66
III.1.5.11 TASK #209 NETWORK - 13300 -- NOSE LANDING . III-71
III.1.5.13 TASK #261 NETWORK - 13500 -- ARRESTING GEAR III-73
III.1.5.14 TASK #277 NETWORK - 14100 -- CONTROL STICK III-75
III.1.5.15 TASK #293 NETWORK - 14200 -- LATERAL CONTROL III-77
III.1.5.16 TASK #319 NETWORK - 14300 -- STABILATOR SYS III-79
III.1.5.17 TASK #346 NETWORK - 14400 -- RUDDER SYSTEM III-81
III.1.5.18 TASK #372 NETWORK - 14500 -- FLAP SYSTEM . III-83
III.1.5.19 TASK #396 NETWORK - 14600 -- SPEED BRAKE SYS III-85
III.1.5.20 TASK #413 NETWORK - 14800 -- LEAD EDGE SLAT III-87
III.1.5.21 TASK #442 NETWORK - 41100 -- AIR CONDITION. III-89
III.1.5.22 TASK #458 NETWORK - 41200 -- PRESSURIZATION III-90
III.1.5.23 TASK #470 NETWORK - 41300 -- RAIN REMOVAL . III-91
III.1.5.24 TASK #475 NETWORK - 41400 -- ANTI-G SYSTEM III-92
III.1.5.25 TASK #478 NETWORK - 42100 -- RELAY PANELS . III-93
III.1.5.26 TASK #502 NETWORK - 42200 -- MAIN POWER AC III-95
III.1.5.27 TASK #508 NETWORK - 42300 -- D C SYSTEM . . III-96
III.1.5.28 TASK #521 NETWORK - 42600 -- GEN SYS. 30-KVA III-97
III.1.5.29 TASK #529 NETWORK - 44100 -- INTERIOR LIGHT III-98
III.1.5.30 TASK #544 NETWORK - 44200 -- EXTERIOR LIGHT III-99
III.1.5.31 TASK #557 NETWORK - 45100 -- HYDRAULIC SYS III-100
III.1.5.32 TASK #581 NETWORK - 45200 -- PNEUMATIC SYS III-102
III.1.5.33 TASK #597 NETWORK - 46100 -- INTERNAL FUEL III-104
III.1.5.34 TASK #611 NETWORK - 46200 -- EXTERNAL FUEL III-105
III.1.5.35 TASK #626 NETWORK - 46300 -- AIR REFUELING III-107
III.1.5.36 TASK #646 NETWORK - 46400 -- FUEL CONTROL . III-109
III.1.5.37 TASK #667 NETWORK - 47100 -- LIQUID OXYGEN III-111
III.1.5.38 TASK #678 NETWORK - 47200 -- OXYGEN DIST . III-112
III.1.5.39 TASK #687 NETWORK - 49100 -- FIRE WARNING . III-113
III.1.5.40 TASK #695 NETWORK - 51100 -- FLIGHT INSTR . III-114
III.1.5.41 TASK #708 NETWORK - 51200 -- NAV INSTR . . III-115
III.1.5.42 TASK #728 NETWORK - 51300 -- AIR DATA CMPTR III-117
III.1.5.43 TASK #746 NETWORK - 52100 -- AUTO FLIGHT . III-119
III.1.5.44 TASK #753 NETWORK - 52200 -- FLIGHT CONTROL III-120
III.1.5.45 TASK #769 NETWORK - 55100 -- VGH RECORDER . III-121
III.1.5.46 TASK #776 NETWORK - 55200 -- AIR VIDEO REC III-122
III.1.5.47 TASK #781 NETWORK - 63300 -- III-123
III.1.5.48 TASK #796 NETWORK - 71300 -- ILS/VOR/MB SYS III-124
III.1.5.49 TASK #806 NETWORK - 71B00 -- NAV AN/ASN-46A III-125
III.1.5.50 TASK #817 NETWORK - 71H00 -- INERTIAL NAV . III-126
III.1.5.51 TASK #837 NETWORK - 71L00 -- INT ELEC CEN . III-128
III.1.5.52 TASK #860 NETWORK - 71M00 -- INT AN/ASQ-19A III-129
III.1.5.53 TASK #878 NETWORK - 71R00 -- RAD.SEC VOICE III-131
III.1.5.54 TASK #881 NETWORK - 71S00 -- INT AN/APX-76 III-132
III.1.5.55 TASK #892 NETWORK - 71T00 -- MARK XII IFF . III-133
III.1.5.56 TASK #898 NETWORK - 71V00 -- INT AN/APX-81 III-134
III.1.5.57 TASK #903 NETWORK - 71Z00 -- AN/ARN-118 TAC III-135
III.1.5.58 TASK #914 NETWORK - 72300 -- RDR AN/APN-155 III-136
III.1.5.59 TASK #926 NETWORK - 72500 -- SST-181X RDR . III-137
III.1.5.60 TASK #932 NETWORK - 73100 -- ARB COMPUTER . III-138
III.1.5.61 TASK #950 NETWORK - 73200 -- STNDBY ATT IND III-140
III.1.5.62 TASK #957 NETWORK - 73500 -- AN/ASQ-91 COMP III-141

QUALITY INSPECTED 1

Accesion For	
NTIS CRA&I	☑
DTIC TAB	☐
Unannounced	☐
Justification	
By	
Distribution /	
Availability Codes	
Dist	Avail and / or Special
A-1	

III.1.5.63 TASK #970 NETWORK - 73G00 -- DIG MOD AVION III-142
III.1.5.64 TASK #987 NETWORK - 74B00 -- AN/ASG-26A . . III-144
III.1.5.65 TASK #995 NETWORK - 74900 -- III-145
III.1.5.66 TASK #1004 NETWORK - 74B00 -- AN/APQ-120 . III-146
III.1.5.67 TASK #1031 NETWORK - 74C00 -- INDICAT CNTRL III-147
III.1.5.68 TASK #1041 NETWORK - 74F00 -- MISSILE AUX . III-149
III.1.5.69 TASK #1047 NETWORK - 74K00 -- III-150
III.1.5.70 TASK #1051 NETWORK - 75100 -- SUSPENSION . III-151
III.1.5.71 TASK #1064 NETWORK - 75300 -- EJECTOR RACKS III-152
III.1.5.72 TASK #1081 NETWORK - 75600 -- MISSILE FIRIN III-153
III.1.5.73 TASK #1099 NETWORK - 75900 -- MULT WPNS REL III-155
III.1.5.74 TASK #1109 NETWORK - 75E00 -- GUN PALLET . III-156
III.1.5.75 TASK #1132 NETWORK - 76500 -- AN/ALE-40 . III-158
III.1.5.76 TASK #1149 NETWORK - 76G00 -- AN/ALR-46A . III-160
III.1.5.77 TASK #1167 NETWORK - 76K00 -- ECM POD . . . III-162
III.1.5.78 TASK #1175 NETWORK - 76M00 -- C-6175 CNTRL III-163
III.1.5.79 TASK #1182 NETWORK - 76X00 -- AN/ALQ-119 . III-164
III.1.5.80 TASK #1190 NETWORK - 77J00 -- DIRECT RDR . III-165
III.1.5.81 TASK #1194 NETWORK - 77X00 -- COMBAT DDC . III-166
III.1.5.82 TASK #1201 NETWORK - 91200 -- EMERG OXYGEN III-167
III.1.5.83 TASK #1205 NETWORK - 93200 -- STORAGE SYS . III-168
III.1.5.84 TASK #1216 NETWORK - 96100 -- PERSONNEL EQP III-169
III.1.5.85 TASK #1220 NETWORK - 961XX -- III-170
III.1.5.86 TASK #1223 NETWORK - 97900 -- A/C EXPLOSIVE III-171
III.1.5.87 TASK #1226 NETWORK - 46300 -- AIR REFUEL . III-172
III.1.5.88 TASK #1239 NETWORK - 75100 -- SUSPENSION . III-173
III.1.5.89 TASK #1276 NETWORK - 76B00 -- III-176
III.1.5.90 TASK #1303 NETWORK - 23000 -- J79 JET ENGIN III-178
III.1.5.91 SIMPLE TASKS -1400,1401,1402,1403,1404,1405 III-182
III.1.5.92 TASK #1411 NETWORK -- BATTLE DAMAGE REPAIR III-183
III.1.5.93 TASK #1412 NETWORK -- BATTLE DAMAGE REPAIR III-184
III.1.5.94 TASK #1441 NETWORK -- AIRBASE DAM A/C REP . III-185
III.1.5.95 SIMPLE TASKS - 1501, 1502, 1503, 1504, 1505 III-186
III.1.6 AIRCRAFT BATTLE DAMAGE REPAIR III-187
III.1.6.1 BATTLE DAMAGE TASK DATA (CT #5 AND #15/2) . III-187
III.1.6.2 AIRBASE DAMAGED AIRCRAFT TASK DATA III-188
III.1.7 PART REPAIR DATA (CARD TYPES #8/1,#8/2,#8/3) III-189
III.1.7.1 LRU #2 - 111AA -- RADOME, NOSE III-189
III.1.7.2 SIMPLE PART REPAIR TASK #3 . . . . . III-189
III.1.7.3 LRU #4 - 111BM -- FAIRING, FORWARD NOSE GEAR III-190
III.1.7.4 SIMPLE REPAIR TASKS #5 - #35 . . . . . III-190
III.1.7.5 LRU #36 - 1122L -- DOOR (141 L/R) III-191
III.1.7.6 SIMPLE REPAIR TASK #37 . . . . . III-191
III.1.7.7 LRU #38 - 112BL -- DOOR, (141 L/R) III-192
III.1.7.8 SIMPLE REPAIR TASKS #39 - #45 . . . . . III-192
III.1.7.9 LRU #46 - 1212F -- FOOT RAMP ASSEMBLY III-193
III.1.7.10 SIMPLE REPAIR TASKS #47, #48 . . . . . III-193
III.1.7.11 LRU #49 - 1231B -- VALVE, PNEUMATIC SEL . . III-194
III.1.7.12 SIMPLE REPAIR TASKS #50 - #55 . . . . . III-194
III.1.7.13 LRU #56 - 1236K -- PNEUMATIC CYLINDER, AFT III-195
III.1.7.14 SIMPLE REPAIR TASKS #57 - #67 . . . . . III-195
III.1.7.15 LRU #68 - 1322M -- SIDE BRACE ACTUATOR,LEFT III-196
III.1.7.16 SIMPLE REPAIR TASKS #69 - #80 . . . . . III-196
III.1.7.17 LRU #81 -1342B -- BRAKE VALVE, MANUAL CNTRL III-197
III.1.7.18 SIMPLE REPAIR TASKS #82 - #93 . . . . . III-197
III.1.7.19 LRU #94 - 14200 -- LATERAL CONTROL SYSTEM . III-198
III.1.7.20 SIMPLE REPAIR TASKS #95 - #97 . . . . . III-198
III.1.7.21 LRU #98 - 1425B -- OUTBOARD SPOILER PWR CYL III-199
III.1.7.22 LRU #99 - 1425D -- INBOARD SPOILER PWR CYL III-199
III.1.7.23 SIMPLE REPAIR TASKS #100 - #110 . . . . . III-200

III.1.7.24 LRU #111 - 1455E -- CYLINDER, TRAIL EDGE . III-200
III.1.7.25 SIMPLE REPAIR TASKS #112 - #130 . . . . . III-201
III.1.7.26 LRU #131 - 4115A -- AIR FILTER, IN-LIN CADC III-201
III.1.7.27 SIMPLE REPAIR TASK #132 . . . . . III-202
III.1.7.28 LRU #133 - 42110 -- MISC RELAY PANEL NO.1 III-202
III.1.7.29 SIMPLE REPAIR TASK #134 . . . . . III-203
III.1.7.30 LRU #135 - 42120 -- MISC RELAY PANEL NO.2 . III-203
III.1.7.31 LRU #136 - 42130 -- MISC RELAY PANEL NO.3 . III-204
III.1.7.32 LRU #137 - 42140 -- MISC RELAY PANEL NO.4 . III-204
III.1.7.33 SIMPLE REPAIR TASKS #138 - #147 . . . . . III-205
III.1.7.34 LRU #148 - 4411B -- PANEL ASSY, INT COCKPIT III-205
III.1.7.35 SIMPLE REPAIR TASK #149 . . . . . III-206
III.1.7.36 LRU #150 - 4411K -- CNTRL PAN CAUTION LIGHT III-206
III.1.7.37 SIMPLE REPAIR TASKS #151 - #157 . . . . . III-207
III.1.7.38 LRU #158 - 4512A -- RESERVOIR, HYDRAL NO.2 III-207
III.1.7.39 SIMPLE REPAIR TASK #159 . . . . . III-208
III.1.7.40 LRU #160 - 4513A -- RESERVOIR, UTIL HYDRAL III-208
III.1.7.41 SIMPLE REPAIR TASKS #161 - #174 . . . . . III-209
III.1.7.42 LRU #175 - 471AA -- CONVERTER, LOX III-209
III.1.7.43 SIMPLE REPAIR TASKS #176 - #193 . . . . . III-210
III.1.7.44 LRU #194 - 512CL -- INDICATOR, HORIZ SIT III-210
III.1.7.45 SIMPLE REPAIR TASKS #195, #196 . . . . . III-211
III.1.7.46 LRU #197 - 513BO -- ANGLE-OF-ATTACK XMIT. . III-211
III.1.7.47 SIMPLE REPAIR TASKS #198 - #200 . . . . . III-212
III.1.7.48 LRU #201 - 513HO -- AIR DATA COMPUTER . . . III-212
III.1.7.49 SIMPLE REPAIR TASKS #202 - #206 . . . . . III-213
III.1.7.50 LRU #207 - 513XO -- ALTITUDE ENCODER UNIT . III-213
III.1.7.51 SIMPLE REPAIR TASKS #208 - #210 . . . . . III-214
III.1.7.52 LRU #211 - 52250 -- ACCELEROMETER (LATERAL) III-214
III.1.7.53 LRU #212 - 52270 -- RATE GYRO (ROLL) III-215
III.1.7.54 LRU #213 - 52280 -- RATE GYRO (YAW) III-215
III.1.7.55 LRU #214 - 522AO -- AUTOPILOT CONTROLLER . III-216
III.1.7.56 LRU #215 - 522BO -- MOTIONAL TRANSDUCER . . III-216
III.1.7.57 LRU #216 - 522EO -- AMPLIFIER, CONTROL . . III-217
III.1.7.58 LRU #217 - 522EB -- AMPLIFIER, SERVO, YAW . III-217
III.1.7.59 SIMPLE REPAIR TASK #218 . . . . . III-218
III.1.7.60 LRU #219 - 522EQ -- SYNC DRIVE, PITCH . . III-218
III.1.7.61 SIMPLE REPAIR TASKS #220 - #226 . . . . . III-219
III.1.7.62 LRU #227 - 63310 -- NOC III-219
III.1.7.63 SIMPLE REPAIR TASKS #228 - #230 . . . . . III-220
III.1.7.64 LRU #231 - 6331N -- NOC III-220
III.1.7.65 LRU #232 - 63350 -- NOC III-221
III.1.7.66 LRU #233 - 6335A -- NOC III-221
III.1.7.67 SIMPLE REPAIR TASK #234 . . . . . III-222
III.1.7.68 LRU #235 - 71310 -- RECVER, R-2032/ARN-127 III-222
III.1.7.69 SIMPLE REPAIR TASK #236 . . . . . III-223
III.1.7.70 LRU #237 - 71350 -- INDICATOR, ILS III-223
III.1.7.71 SIMPLE REPAIR TASK #238 . . . . . III-224
III.1.7.72 LRU #239 - 71E20 -- AMPLIFIER, COMPUTER . . III-224
III.1.7.73 SIMPLE REPAIR TASKS #240 - #257 . . . . . III-225
III.1.7.74 LRU #258 - 71LEO -- AMP PWR SUP REC AM-2349 III-225
III.1.7.75 LRU #259 - 71LJO -- BEAR, DIST, HDG INDIC . III-226
III.1.7.76 SIMPLE REPAIR TASK #260 . . . . . III-226
III.1.7.77 LRU #261 - 71LQA -- ANT, ADF,AS-909/ARA-48 III-227
III.1.7.77 LRU #261 - 71LQA -- ADF ANTENNA III-227
III.1.7.78 SIMPLE REPAIR TASK #262 . . . . . III-227
III.1.7.79 LRU #263 - 71LXO -- HEADSET/MICROPHONE CORD III-228
III.1.7.80 SIMPLE REPAIR TASK #264 . . . . . III-228
III.1.7.81 LRU #265 - 71MEO -- NOC III-229
III.1.7.82 SIMPLE REPAIR TASK #266 . . . . . III-229
III.1.7.83 LRU #267 - 71MHO -- INTERCOMM STATION . . . III-230
III.1.7.84 SIMPLE REPAIR TASK #268 . . . . . III-230
III.1.7.85 LRU #269 - 71BSO -- RADIO REC/TRANSMIT . . III-231
III.1.7.86 SIMPLE REPAIR TASK #270 . . . . . III-231

III.1.7.87 LRU #271 - 71SCO -- SWITCH AMPLIFIER . . . III-232
III.1.7.88 SIMPLE REPAIR TASKS #272, #273 . . . . . III-232
III.1.7.89 LRU #274 - 71ZAO -- REC-TRANSMIT RT-1159/A III-233
III.1.7.90 SIMPLE REPAIR TASK #275 . . . . . III-233
III.1.7.91 LRU #276 - 71ZCO -- MOUNT (REC/TRANS) . . . III-234
III.1.7.92 LRU #277 - 71ZDO -- CONTROL UNIT C-10062/A III-234
III.1.7.93 SIMPLE REPAIR TASKS #278, #279 . . . . . III-235
III.1.7.94 LRU #280 - 723AO -- REC-TRANSMIT RT-689 . . III-235
III.1.7.95 SIMPLE REPAIR TASK #281 . . . . . III-236
III.1.7.96 LRU #282 - 723BO -- INDICATOR, HGT ID-1090 III-236
III.1.7.97 SIMPLE REPAIR TASKS #283, #284 . . . . . III-237
III.1.7.98 LRU #285 - 7251O -- SST-181X TRANSPON ASSY III-237
III.1.7.99 SIMPLE REPAIR TASK #286 . . . . . III-238
III.1.7.100 LRU #287 - 731BO -- AMPLIFIER POWER SUPPLY III-238
III.1.7.101 SIMPLE REPAIR TASKS #288 - #290 . . . . . III-239
III.1.7.102 LRU #291 - 731EO -- COMPUTER, BOMBING FLT. III-239
III.1.7.103 SIMPLE REPAIR TASK #292 . . . . . III-240
III.1.7.104 LRU #293 - 731GO -- DISPLACEMENT GYRO . . III-240
III.1.7.105 SIMPLE REPAIR TASKS #294 - #296 . . . . . III-241
III.1.7.106 LRU #297 - 731NO -- REMOTE ATT INDICATOR III-241
III.1.7.107 SIMPLE REPAIR TASKS #298 - #320 . . . . . III-242
III.1.7.108 LRU #321 - 7483O -- NOC III-243
III.1.7.109 SIMPLE REPAIR TASKS #322, #323 . . . . . III-243
III.1.7.110 LRU #324 - 7492O -- NOC III-244
III.1.7.111 SIMPLE REPAIR TASK #325 . . . . . III-244
III.1.7.112 LRU #326 - 746AO -- POWER SUPPLY PP-4848 . III-245
III.1.7.113 SIMPLE REPAIR TASKS #327 - #330 . . . . . III-245
III.1.7.114 LRU #331 - 74BFO -- TRANSMIT, RDR T-7348 . III-246
III.1.7.115 SIMPLE REPAIR TASKS #332, #333 . . . . . III-246
III.1.7.116 LRU #334 - 746JO -- CONTROL, ANT C-7348 . III-247
III.1.7.117 SIMPLE REPAIR TASKS #335 - #340 . . . . . III-247
III.1.7.118 LRU #341 - 74ESO -- CONTROL, RADAR SET . . III-248
III.1.7.119 SIMPLE REPAIR TASKS #342, #343 . . . . . III-248
III.1.7.120 LRU #344 - 74BVO -- ANTENNA AS-2072A . . . III-249
III.1.7.121 SIMPLE REPAIR TASKS #345 - #347 . . . . . III-249
III.1.7.122 LRU #348 - 74CAO -- INDICAT CNTRL DSCG . . III-250
III.1.7.123 LRU #349 - 74CBO -- INDICAT.AZ.EL. & RNG . III-250
III.1.7.124 SIMPLE REPAIR TASKS #350 - #353 . . . . . III-251
III.1.7.125 LRU #354 - 7519O -- NOC III-251
III.1.7.126 LRU #355 - 7519A -- NOC III-252
III.1.7.127 LRU #356 - 7519B -- NOC III-252
III.1.7.128 LRU #357 - 7519C -- NOC III-253
III.1.7.129 LRU #358 - 7519D -- NOC III-253
III.1.7.130 SIMPLE REPAIR TASK #359 . . . . . III-254
III.1.7.131 LRU #360 - 7531O -- CENTERLINE MER III-254
III.1.7.132 SIMPLE REPAIR TASKS #361 - #371 . . . . . III-255
III.1.7.133 LRU #372 - 7595O -- WEAPONS RELEASE CNTRL III-255
III.1.7.134 SIMPLE REPAIR TASKS #373 - #412 . . . . . III-256
III.1.7.135 LRU #413 - 9321A -- CONTAINER, STORAGE SYS III-257
III.1.7.136 SIMPLE REPAIR TASKS #414 - #577 . . . . . III-257
III.1.7.137 LRU #578 - 7511O -- AERO 3B LAUNCHER . . . III-258
III.1.7.138 SIMPLE REPAIR TASKS #579 - #587 . . . . . III-258
III.1.7.139 LRU #588 - 751CA -- PYLON,INBOARD ARM,R-H III-259
III.1.7.140 LRU #589 - 751CB -- PYLON,OUTBOARD ARM,L-H III-259
III.1.7.141 LRU #590 - 751CC -- PYLON,OUTBOARD ARM,R-H III-260
III.1.7.142 LRU #591 - 751CD -- PYLON,INBOARD ARM,L-H III-260
III.1.7.143 SIMPLE REPAIR TASK #592 . . . . . III-261
III.1.7.144 LRU #593 - 751NO -- SUU-20/A RCKT/BMB DISP III-261
III.1.7.145 SIMPLE REPAIR TASKS #594 - #599 . . . . . III-262
III.1.7.146 LRU #600 - 76BBO -- NOC III-262
III.1.7.147 SIMPLE REPAIR TASKS #601 - #603 . . . . . III-263
III.1.7.148 LRU #604 - 76BFO -- NOC III-263
III.1.7.149 SIMPLE REPAIR TASKS #605 - #611 . . . . . III-264
III.1.7.150 LRU #612 - 76BSO -- NOC III-264

CHAPTER III RESOURCE REQUIREMENTS (CONTINUED)

III.1.7.151 LRU #613 - 76BUO -- NOC III-265
III.1.7.152 SIMPLE REPAIR TASKS #614 - #617 . . . . . III-265
III.1.7.153 LRU #638 - 23000 -- J79 JET ENGINE III-266
III.1.8 TASK TIME MODIFIERS (CARD TYPE #17/2) III-271
III.1.8.1 HURRY FACTORS III-271
III.1.8.2 REDUCE TIMES III-271
III.1.8.3 SAVE TIMES III-272
III.1.9 AIRCRAFT DATA (CARD TYPES #15/1,#15/2,#15/3) III-273
III.1.9.1 GENERAL DATA III-273
III.1.9.2 BASE DATA (CARD TYPE #17/1) III-274

CHAPTER IV INITIAL STOCKS AND STATUS OF AIRBASE RESOURCES

IV.1 AIRCRAFT IV-1
IV.1.1 AIRCRAFT ASSIGNMENT BY BASE (CARD TYPE #20) . IV-1
IV.1.2 AIRCRAFT INITIAL STATUS (CARD TYPE #41) . . . IV-1
IV.1.3 AIRCRAFT INITIAL MAINTENANCE STATUS (CT #42) . IV-1
IV.2 PERSONNEL DATA IV-2
IV.2.1 PERSONNEL LIST (CARD TYPE #21) IV-2
IV.2.2 EQUIVALENT PERSONNEL (CARD TYPE #45/1) IV-5
IV.2.3 CROSSED TRAINED PERSONNEL (CARD TYPE #45/2) . IV-7
IV.2.4 TASK-ASSIST PERSONNEL (CARD TYPE #45/3) . . . IV-9
IV.3 SUPPORT EQUIPMENT IV-11
IV.3.1 AGE LIST (CARD TYPES #22 AND #46) IV-11
IV.4 SPARE PARTS IV-13
IV.4.1 LIST OF PARTS IV-13
IV.4.2 LIST OF SALVAGEABLE PARTS (CARD TYPE #28) . . IV-22
IV.4.3 CANNIBALIZATION DATA (CARD TYPES #35/1, #35/2) IV-30
IV.5 TRAP DATA (CARD TYPE #25) IV-39

CHAPTER V COMMUNICATION SYSTEM DATA

V.1 AIR TRAFFIC CONTROL DATA (CARD TYPE #17/11) . . . V-1

CHAPTER VI CROSS-REFERENECES

VI.1 TASK CROSS-REFERENCE VI-2
VI.2 PERSONNEL CROSS-REFERENCE VI-4
VI.3 EQUIPMENT CROSS-REFERENCE VI-9
VI.4 PARTS CROSS-REFERENCE VI-11

LIST OF FIGURES

FIGURE	TITLE	PAGE
1	SHOP TASK SEQUENCE	III-6
2	TASK #1 NETWORK	III-50
3a	TASK #6 NETWORK	III-52
3b	TASK #6 NETWORK (CONTINUED)	III-53
4	TASK #50 NETWORK	III-55
5	TASK #66 NETWORK	III-57
6	TASK #95 NETWORK	III-58
7	TASK #108 NETWORK	III-59
8a	TASK #120 NETWORK	III-61
8b	TASK #120 NETWORK (CONTINUED)	III-62
9a	TASK #153 NETWORK	III-64
9b	TASK #153 NETWORK (CONTINUED)	III-65
10a	TASK #177 NETWORK	III-67
10b	TASK #177 NETWORK (CONTINUED)	III-68
11	TASK #209 NETWORK	III-70
12	TASK #232 NETWORK	III-72
13	TASK #261 NETWORK	III-74
14	TASK #277 NETWORK	III-76
15	TASK #293 NETWORK	III-78
16	TASK #319 NETWORK	III-80
17	TASK #346 NETWORK	III-82
18	TASK #372 NETWORK	III-84
19	TASK #396 NETWORK	III-86
20	TASK #413 NETWORK	III-88
21	TASK #442 NETWORK	III-89
22	TASK #458 NETWORK	III-90
23	TASK #470 NETWORK	III-91
24	TASK #475 NETWORK	III-92
25	TASK #478 NETWORK	III-94

FIGURE	TITLE	PAGE
26	TASK #502 NETWORK	III-95
27	TASK #508 NETWORK	III-96
28	TASK #521 NETWORK	III-97
29	TASK #529 NETWORK	III-98
30	TASK #544 NETWORK	III-99
31	TASK #557 NETWORK	III-101
32	TASK #581 NETWORK	III-103
33	TASK #597 NETWORK	III-104
34	TASK #611 NETWORK	III-106
35	TASK #626 NETWORK	III-108
36	TASK #646 NETWORK	III-110
37	TASK #667 NETWORK	III-111
38	TASK #678 NETWORK	III-112
39	TASK #687 NETWORK	III-113
40	TASK #695 NETWORK	III-114
41	TASK #708 NETWORK	III-116
42	TASK #728 NETWORK	III-118
43	TASK #746 NETWORK	III-119
44	TASK #753 NETWORK	III-120
45	TASK #769 NETWORK	III-121
46	TASK #776 NETWORK	III-122
47	TASK #781 NETWORK	III-123
48	TASK #796 NETWORK	III-124
49	TASK #809 NETWORK	III-125
50	TASK #817 NETWORK	III-127
51	TASK #837 NETWORK	III-128
52	TASK #860 NETWORK	III-130
53	TASK #878 NETWORK	III-131
54	TASK #881 NETWORK	III-132
55	TASK #892 NETWORK	III-133

FIGURE	TITLE	PAGE
56	TASK #898 NETWORK	III-134
57	TASK #903 NETWORK	III-135
58	TASK #914 NETWORK	III-136
59	TASK #926 NETWORK	III-137
60	TASK #932 NETWORK	III-139
61	TASK #950 NETWORK	III-140
62	TASK #957 NETWORK	III-141
63	TASK #970 NETWORK	III-143
64	TASK #987 NETWORK	III-144
65	TASK #995 NETWORK	III-145
66	TASK #1004 NETWORK	III-147
67	TASK #1031 NETWORK	III-148
68	TASK #1041 NETWORK	III-149
69	TASK #1047 NETWORK	III-150
70	TASK #1051 NETWORK	III-151
71	TASK #1064 NETWORK	III-152
72	TASK #1081 NETWORK	III-154
73	TASK #1099 NETWORK	III-155
74	TASK #1109 NETWORK	III-157
75	TASK #1132 NETWORK	III-159
76	TASK #1149 NETWORK	III-161
77	TASK #1167 NETWORK	III-162
78	TASK #1175 NETWORK	III-163
79	TASK #1182 NETWORK	III-164
80	TASK #1190 NETWORK	III-165
81	TASK #1194 NETWORK	III-166
82	TASK #1201 NETWORK	III-167
83	TASK #1205 NETWORK	III-168
84	TASK #1216 NETWORK	III-169
85	TASK #1220 NETWORK	III-170

FIGURE	TITLE	PAGE
86	TASK #1223 NETWORK	III-171
87	TASK #1226 NETWORK	III-172
88a	TASK #1239 NETWORK	III-174
88b	TASK #1239 NETWORK (CONTINUED)	III-175
89	TASK #1276 NETWORK	III-177
90a	TASK #1303 NETWORK	III-179
90b	TASK #1303 NETWORK (CONTINUED)	III-180
90c	TASK #1303 NETWORK (CONTINUED)	III-181
91	TASK #1411 NETWORK	III-183
92	TASK #1412 NETWORK	III-184
93	TASK #1441 NETWORK	III-185
94	LRU #2 NETWORK	III-189
95	LRU #4 NETWORK	III-190
96	LRU #36 NETWORK	III-191
97	LRU #38 NETWORK	III-192
98	LRU #46 NETWORK	III-193
99	LRU #49 NETWORK	III-194
100	LRU #56 NETWORK	III-195
101	LRU #68 NETWORK	III-196
102	LRU #81 NETWORK	III-197
103	LRU #94 NETWORK	III-198
104	LRU #98 NETWORK	III-199
105	LRU #99 NETWORK	III-199
106	LRU #111 NETWORK	III-200
107	LRU #131 NETWORK	III-201
108	LRU #133 NETWORK	III-202
109	LRU #135 NETWORK	III-203
110	LRU #136 NETWORK	III-204
111	LRU #137 NETWORK	III-204
112	LRU #148 NETWORK	III-205
113	LRU #150 NETWORK	III-206

FIGURE	TITLE	PAGE
114	LRU #158 NETWORK	III-207
115	LRU #160 NETWORK	III-208
116	LRU #175 NETWORK	III-209
117	LRU #194 NETWORK	III-210
118	LRU #197 NETWORK	III-211
119	LRU #201 NETWORK	III-212
120	LRU #207 NETWORK	III-213
121	LRU #211 NETWORK	III-214
122	LRU #212 NETWORK	III-215
123	LRU #213 NETWORK	III-215
124	LRU #214 NETWORK	III-216
125	LRU #215 NETWORK	III-216
126	LRU #216 NETWORK	III-217
127	LRU #217 NETWORK	III-217
128	LRU #219 NETWORK	III-218
129	LRU #227 NETWORK	III-219
130	LRU #231 NETWORK	III-220
131	LRU #232 NETWORK	III-221
132	LRU #233 NETWORK	III-221
133	LRU #235 NETWORK	III-222
134	LRU #237 NETWORK	III-223
135	LRU #239 NETWORK	III-224
136	LRU #258 NETWORK	III-225
137	LRU #259 NETWORK	III-226
138	LRU #261 NETWORK	III-227
139	LRU #263 NETWORK	III-228
140	LRU #265 NETWORK	III-229
141	LRU #267 NETWORK	III-230
142	LRU #269 NETWORK	III-231
143	LRU #271 NETWORK	III-232

FIGURE	TITLE	PAGE
144	LRU #274 NETWORK	III-233
145	LRU #276 NETWORK	III-234
146	LRU #277 NETWORK	III-234
147	LRU #280 NETWORK	III-235
148	LRU #282 NETWORK	III-236
149	LRU #285 NETWORK	III-237
150	LRU #287 NETWORK	III-238
151	LRU #291 NETWORK	III-239
152	LRU #293 NETWORK	III-240
153	LRU #297 NETWORK	III-241
154	LRU #321 NETWORK	III-243
155	LRU #324 NETWORK	III-244
156	LRU #326 NETWORK	III-245
157	LRU #331 NETWORK	III-246
158	LRU #334 NETWORK	III-247
159	LRU #341 NETWORK	III-248
160	LRU #344 NETWORK	III-249
161	LRU #348 NETWORK	III-250
162	LRU #349 NETWORK	III-250
163	LRU #354 NETWORK	III-251
164	LRU #355 NETWORK	III-252
165	LRU #356 NETWORK	III-252
166	LRU #357 NETWORK	III-253
167	LRU #358 NETWORK	III-253
168	LRU #360 NETWORK	III-254
169	LRU #372 NETWORK	III-255
170	LRU #413 NETWORK	III-257
171	LRU #578 NETWORK	III-258
172	LRU #588 NETWORK	III-259
173	LRU #589 NETWORK	III-259

FIGURE	TITLE	PAGE
174	LRU #590 NETWORK	III-260
175	LRU #591 NETWORK	III-260
176	LRU #593 NETWORK	III-261
177	LRU #600 NETWORK	III-262
178	LRU #604 NETWORK	III-263
179	LRU #612 NETWORK	III-264
180	LRU #613 NETWORK	III-265
181a	LRU #638 NETWORK	III-268
181b	LRU #638 NETWORK (CONTINUED)	III-269
181c	LRU #638 NETWORK (CONTINUED)	III-270

CHAPTER I

INTRODUCTION

I.1 DATA BASE PURPOSE

THIS DATA BASE WAS DEVELOPED TO REPRESENT THE F-4E AIRCRAFT IN A WARTIME ENVIRONMENT.

I.2 GENERAL DESCRIPTION OF THE DATA BASE

THIS DOCUMENTATION IS FOR THE TSAR F-4E INPUT DATA BASE. THIS DATA BASE REPRESENTS A 3 SQUADRON (72 AIRCRAFT) MOB AND A REAR MAINTENANCE BASE. ON-EQUIPMENT TASKS AND TASK PROBABLITLIES WERE ORIGINALLY BASED ON THE LATEST LCOM DATA AND ADJUSTED TO REFLECT A COMBAT ENVIRONMENT. THIS DATA BASE ALSO INCLUDES 25, 50, 150, 300 AND 600 HOUR PHASED MAINTENANCE REQUIRMENTS. SPARE PARTS ARE EXPLICITLY ENTERED IN THE DATA BASE. ABDR PERSONNEL AND TASKS ARE REPRESENTED. THIS DATA BASE WAS DEVELOPED WITH THE LATEST VERSION OF TSAR (23 OCT 1985) DIMENSIONED FOR 200 PERSONNEL TYPES, 100 EQUIPMENT TYPES, 50 TYPES OF MUNTIONS, TRAP AND CE BUILDING MATERIALS, AND FOR 1000 TYPES OF AIRCRAFT PARTS. CHEMICAL ATTACK OR ENVIRONMENT DATA IS NOT EXPLICITLY EXPRESSED IN THIS DATA BASE.

CHAPTER II

TSAR CONTROL VARIABLES

II 1 BASIC CONTROL VARIABLES (CARD TYPE #1)

VARIABLE	VALUE	EXPLANATION
SIMLTH	30	30 DAYS WAS USED AS THE SIMULATION LENGTH FOR DATA BASE TESTING
NTRIAL	25	25 TRIALS WERE USED IN DATA BASE TESTING
EXTEND	0	SINGLE HISTORY OPTION OF SIMULATION WAS NOT USED
SEED	1	USED REPRODUCIBLE SEED OF THE RANDOM NUMBER GENERATOR
NBASE	2	1 F-4E MOB, 1 REAR MAINTENANCE BASE
NTYPE	1	1 AIRCRAFT TYPE (F-4E)
CREWS	1	AIR CREWS ARE SIMULATED
BUILD	1	THE MUNITIONS ASSEMBLY FEATURES ARE ACTIVATED
TSAR	0	NO THEATER RESOURCE MANAGEMENT
CMODE	0	NO THEATER RESOURCE MANAGEMENT
CONSIG	0	ANY PARTS THAT ARE SHIPPED TO THE THEATER TO REPLACE CONDEMNED PARTS AND LRU'S THAT WERE NRTSED TO CONUS ARE CONSIGNED TO THE BASE OF ORIGIN ON RETURN
DOSHEL	1	AIRCRAFT ARE REMOVED FROM SHELTERS WHEN THEY ARE LAUNCHED, AND REASSIGNED AN AIRCRAFT SHELTER OR PARKING RAMP, UPON RETURN
DOATC	0	AIR TRAFFIC CONTROL ACTIVITIES ARE NOT SIMULATED
TASKRWY	0	IF TWO OR MORE MOS LOCATIONS HAVE THE SAME NUMBER OF CRATERS TO BE REPAIRED, THE MOS LOCATION THAT HAS THE FEWEST MANHOURS REQUIRED TO CLEAR MINES AND UXO IS SELECTED

II.2 OUTPUT CONTROL VARIABLES (CARD TYPE #2/1)

VARIABLE	VALUE	EXPLANATION
TEST	0	DEBUG FEATURES ARE NOT ACTIVATED
VERIFY	0	DATA BASE HAS ALREADY BEEN TESTED USING THE VERIFY FEATURE
PRINT	4	TSAR SIMULATION OUTPUT LEVEL
SCROLL	0	AIRCRAFT ACTIVITY REPORTS ARE NOT PRODUCED
OVERFLOW	2	WHEN THE DIMENSIONS OF THE ARRAYS ARE EXCEEDED, OVERFLOW IS NOTED FOR FIRST ENTRY AND TALLIED.
STATFQ	10	EVERY 10 DAYS THE SUMMARY DATA REGARDING THE AVERAGE LENGTH OF TIME FOR TASKS AND JOBS, AND THE LENGTHS OF THE AIRCRAFT DELAYS ARE PRINTED
CUMSTA	0	SUMMARY DATA (STATFQ) ARE CUMULATED SEPARATELY FOR EACH TRIAL
NONUNI	1	LOSSES ARE DETERMINED BY A SAMPLE FROM THE BINOMIAL DISTRIBUTION.
MLIST	0	THE TIMES REQUIRED TO PREPARE AIRCRAFT FOR FLIGHT ARE CUMULATED FOR 0 TO 2, 4, 6, AND 8 HOURS
XTEST	0	SPECIAL DEBUG FEATURES ARE NOT ACTIVATED
CEWORK	1	CIVIL ENGINEERING RESOURCES ARE ALLOCATED TO REPAIR DAMAGE FROM AIRBASE ATTACKS
ATRISK	1	WHEN A SHOP, OR ALL ELEMENTS OF A DISTRIBUTED SHOP ARE DAMAGED AT THE TIME OF A SUBSEQUENT ATTACK, THE DAMAGE IS ASSESSED AS THOUGH THE RESOURCES ARE DISTRIBUTED AS IN THE UNDAMAGED CASE. THAT IS, ALL DISTRIBUTED LOCATIONS ARE AT RISK.
CEPEQ	10	THERE ARE TEN TYPES OF CIVIL ENGINEERING PERSONEL
CEAGE	10	THERE ARE TEN TYPE OF CIVIL ENGINEERING EQUIPMENT
ONLYUE	1	TSARINA GENERATED EQUIPMENT LOSS RATES ARE APPLIED ONLY TO UNASSIGNED EQUIPMENTS.

II.3 REPETITIVE RANDOM NUMBER STREAMS (CARD TYPE #2/2)

VARIABLE	VALUE	EXPLANATION
SORTIE DEMAND	-1	RANDOM NUMBER STREAM FOR THIS EVENT IS NOT REPEATED TRIAL TO TRIAL
INTRA-THEATER TRANSPORT	0	RANDOM NUMBER STREAM FOR THIS EVENT SHOULD REPEAT TRIAL TO TRIAL
RESOURCE STATUS REPORTS	0	RANDOM NUMBER STREAM FOR THIS EVENT SHOULD REPEAT TRIAL TO TRIAL
ZERO-TIME SHOP ACTIVITY	0	RANDOM NUMBER STREAM FOR THIS EVENT SHOULD REPEAT TRIAL TO TRIAL
TASK UNCERTAINTY	0	RANDOM NUMBER STREAM FOR THIS EVENT SHOULD REPEAT TRIAL TO TRIAL

****AUXILIARY CONTROL VARIABLES****

ADAPTR	0	NO CHANGE IN NRTS POLICY FOR RR PARTS
SEEKSH	0	ANOTHER IN-THEATER SHOP IS NOT SOUGHT FOR PARTS REPAIR, WHEN THE NOMINAL SHOP IS CLOSED BY DAMAGE
SHPREP	0	NO USE OF "SEND" LOGIC IN THEATER
NRTPOL	0	AN LRU THAT REQUIRES AN SRU THAT IS UNAVAILABLE AND IS NOT NORMALLY STOCKED, IS NOT NRTSED
TODOCK	0	PARTS THAT ARE NORMALLY NRTSED TO ANOTHER BASE BUT CAN'T BE BECAUSE NO SHIPMENT SCHEDULE EXISTS, ARE SENT TO CONUS

II.4 SEED DATA (CARD TYPE #2/3)

VARIABLES	VALUES	EXPLANATION
*** NOT USED ***		

II.5 CONTROL FOR SPECIAL DEFERRED AIRCRAFT TASK STATUS REPORTS (CARD TYPE #2/4)

VARIABLES	VALUES	EXPLANATION
*** NOT USED ***		

II.6 OUTPUT CONTROL VARIABLES (CARD TYPE #2/5)

VARIABLES	VALUES	EXPLANATION
RPRINT	0	CONTROLS INTERMEDIATE OUTPUT THAT DEFINES THE STATUS OF THE RUNWAY/ TAXIWAY CLEARANCE TASKS.
DPRINT	0	CONTROLS SPECIAL OUTPUT DATA RELATING TO DEFERRED AIRCRAFT TASKS.

II.7 OPERATIONS CONTROL VARIABLES (CARD TYPE #3/1)

VARIABLE	VALUE	EXPLANATION
OPSBSE	1	ONE F-4E MOB
POSTPN	1	TASKS WILL BE DEFERRED THAT ARE NOT CRITICAL FOR THE NEXT MISSION
IGNORE	0	DEFERRED TASKS ARE NOT IGNORED
DOPHAS	1	PHASED MAINTENANCE FEATURES ARE ACTIVATED
LTHDEF	0	UNSCHEDULED MAINTENANCE WHOSE CRITICALITY IS GREATER THAN 66 MAY NOT BE DEFERRED
CANMOD	2	CANNIBALIZATION IS PERMITTED WITH ON-BASE REPARABLES. ELIGIBLE AIRCRAFT ARE THOSE WITH PARTS MISSING, WHOSE DESIGNATED MISSION IS NOT AFFECTED BY PART.
MXHOLE	15	15 "HOLES" MAY BE CREATED ON A SINGLE AIRCRAFT BY CANNIBALIZATION
DOCANN	0	NO CANNABILIZATION BY PART DEMAND
CANMUL	150	CANNIBALIZATION TIME IS 150 PERCENT OF THE NOMINAL TIME FOR THE TASK SEGMENT THAT SPECIFIES THE PART
CANSRU	1	THE SRU'S ARE STRIPPED FROM ONE OF TWO OR MORE LRU'S THAT ARE WAITING FOR REPAIR, WHEN AIRCRAFT ARE NORS BECAUSE OF THAT LRU.
CRASH	0	WHEN RUNWAYS ARE CLOSED AT ALL OPERATING BASES (AND AT ANY EMERGENCY BASE) THE SORTIE LENGTH IS ARTIFICIALLY EXTENDED SUCH THAT THE AIRCRAFT LAND AFTER THE RUNWAY AT THE PLANNED RECOVERY BASE HAS BEEN OPENED (SKY HOOK)
ORDIT	1	INTERUPTED TASKS AND REPAIRS ARE HANDLED ON A PRIORITY BASIS, NOT FIFO
ORDWT	1	WAITING TASK AND REPAIRS ARE PRIORITIZED, NOT FIFO
ORDER1	0	NO THEATER RESOURCE MANAGEMENT
ORDER2	0	NO THEATER RESOURCE MANAGEMENT
INDEX	0	A CIRF IS NOT MODELED IN THIS DATA

II.8 AIRCRAFT MANAGEMENT VARIABLES (CARD TYPE #3/2)

VARIABLES	VALUES	EXPLANATION
JOBCON	1	THE MAINTENANCE SCHEDULED FOR THE REAR BASE INCLUDES ALL MANDATORY REAR-BASE TASKS. ALL OTHER REQUIRED TASKS AND MISSION DEPENDENT DEFERRED TASKS THAT MUST BE DONE IN THE REAR
FILLAC	0	THERE IS NO AIRCRAFT FILLER POOL
FLEVEL	0	AIRCRAFT ARE RETURNED FROM THE REAR IF THE NUMBER OF AIRCRAFT AT THE MOB IS LESS THAN THE ASSIGNED NUMBER
MNTLMT	200	AIRCRAFT WHOSE READY-TO-FLY TIME EXCEEDS 2 HOURS ARE TRANSFERRED TO A REAR-AREA BASE FOR MAINTENANCE
MNTF MNTR	150 100	CANDIDATES FOR TRANSFER TO A REAR-AREA BASE THAT ARE PROJECTED TO REQUIRE AS MUCH AS 150 PERCENT OF THE TIME THAT WOULD BE NEEDED AT THE REAR-AREA BASE TO BE READIED FOR THE FERRY FLIGHT, WILL BE TRANSFERRED ONLY IF THE ESTIMATED MAINTENANCE TIME AT THE REAR-AREA BASE EXCEEDS 2 HOURS
QUIK	0	FILLER AIRCRAFT USED TO REPLACE COMBAT AIRCRAFT THAT ARE TRANSFERRED TO THE REAR FOR MAINTENANCE ARE LAUNCHED AT THE SAME TIME THE COMBAT AIRCRAFT INITIATES THE FERRY FLIGHT
RPARTS	10	10 PERCENT OF THE PARTS PROCURED FOR THE FOWARD OPERATING BASES WILL BE PLACED AT REAR-AREA MAINTENANCE BASE(S)
MAXMNT	0	NO FILLER POOL, MAXMNT NOT APPLICABLE
EMERG	0	THERE IS NO EMERGENCY RECOVERY BASE
NOFUEL	0	OTHER TASKS ARE NOT PROHIBITED WHEN REFUELING IS BEING CONDUCTED
UNCER	0	ACTUAL UNCSHEDULED MAINTENANCE TASK PROBABILITIES ARE THE VALUES ON CARD TYPE #7
VBREAK	-1	UNSCHEDULED MAINTENANCE TASKS PROBABILITIES ARE MODIFIED IN PROPORTION TO THE CARD TYPE #18/2 ENTRIES
OLDATA	0	BASE REPORTS ARE GENERATED
NEWDATA	0	THEATER RESOURCE REPORTS ARE TO BE INITIATED AT 0000

II.9 AIRCRAFT PARTS GENERATION (CARD TYPE #3/3)

VARIABLE	VALUE	EXPLANATION
OUTFIT	1	THE AUTOMATIC PARTS STOCK INITIALIZATION IS ACTIVATED
PMODE	0	WRSK'S PARTS STOCK LEVELS ARE NOT COMPUTED
PPRINT	0	SIMULATION OUTPUT LEVEL FOR PARTS DATA
RANDM	1	THE POISSON APPROXIMATION OF BINOMIAL DISTRIBUTION IS USED FOR PARTS SHORTAGES AND THE LOCATION OF PARTS IN THE PIPELINE
FULL	0	NOT ALL PARTS ARE ON BASE, SOME MAY BE ENROUTE AT TIME 0
SHORT	0	NO PARTS SHORTFALLS FROM "AUTHORIZED" LEVELS THAT RESULT FROM SYSTEM-WIDE SHORTAGES
HIATUS	14	DELIVERY OF PARTS IN PIPELINE AT THE BEGINNING OF THE SIMULATION ARE TO BE DELAYED 14 DAYS
TOOFEW	0	NO PERCENTAGE OF CRITICALLY SHORT PARTS
K1LOW	0	NO PARTS SHORTAGES
K2LOW	0	NO PARTS SHORTAGES
ZNORS	0	PARTS SHORTAGE NOTICE IS PRINTED
NEWPRT	0	THE PARTS INITIALIZATION COMPUTATIONS ARE NOT REPEATED FOR EACH TRIAL
NPART	682	THE NUMBER OF THE HIGHEST NUMBERED LRU IS 682
CHNRTS	0	THE NRTS VALUE IN POLICY ARRAY WILL BE USED
FSALVG	25	IF AN AIRCRAFT IS DAMAGED BY AIR ATTACK AND IS NOT REPARABLE, 25 PERCENT OF THAT AIRCRAFT'S SPARE PARTS NOT DESTROYED ARE SALVAGED

II.10 CHEMICAL WARFARE VARIABLES (CARD TYPE #3/4)

VARIABLE	VALUE	EXPLANATION
*** NOT USED ***		

II.11 CHEMICAL WARFARE VARIABLES (CARD TYPE #3/5)

VARIABLE	VALUE	EXPLANATION
*** NOT USED ***		

II .2 MISCELLANEOUS TIME FACTORS (CARD TYPE #4/1)

VARIABLE	VALUE	EXPLANATION
RELIEV	0	AIRCREWS REMAIN ON DUTY THE FULL TIME WHETHER OR NOT THEY ARE NEEDED
SLEEP	12	AIRCREWS GET 12 HOURS OF SLEEP BETWEEN SHIFTS
REST	60	AIRCREWS GET 60 MINUTES OF REST BETWEEN FLIGHTS
ENDAY	20	FLYING DAY ENDS AT 2000
EXPED	4	PARTS REPAIR ADMINISTRATIVE DELAY ARE REDUCED ONE QUARTER (1/EXPED) OF THE NOMINAL TIME IF THERE IS NO SERVICEABLES
LOADTM	215	NOMINAL TIME TO COMMENCE PREFLIGHT IS 0215
LSTYOD	415	LAST TIME FOR COMMENCING MORNING PRE-FLIGHT PREPARATION IS 0415
OVERTM	60	NO MORE THAN 60 MINUTES OF OVERTIME IS PERMITTED
DOWNTM	4	PARTS MAY NOT BE CANNIBALIZED FROM AN AIRCRAFT WITH A READY-TO-FLY TIME WITHIN 4 HOURS
CDELAY	0	NO ADDED DELALY TO THE DEFAULT CANNI-BALIZATION
PKGTM	480	480 MINUTES REQUIRED TO PACKAGE RE-SOURCES FOR AN INTRA-THEATER SHIPMENT
CEDLAY	0	INITIATION OF ALL RECONSTRUCTION TASKS IS NOT DELAYED FOLLOWING AN AIR BASE ATTACK
SHPDLY	0	NO DELAY IS INTRODUCED TO ON- AND OFF-EQUIPMENT TASK FOLLOWING AN AIR-BASE ATTACK
PROTME	-1	WHEN INSUFFICIENT AIRCRAFT ARE READY FOR A SCHEDULED FLILGHT, AND NONE CAN BE FOUND IN THE SPARE QUEUE OR A LOW-ER PRIORITY ALERT, AN AIRCRAFT CAN BE TAKEN FROM ANOTHER SCHEDULED FLIGHT OF THE SAME OR LOWER PRIORITY
C4TM	1600	THE TIME FOR INITIAL THEATER RESOURCE REVIEW IS 1600
C4INT	500	THE TIME INTERVAL BETWEEN PERIODIC THEATER RESOURCE REVIEWS IS 500 HOURS SUBSEQUENT TO THE INITIAL REVIEW

II 13 MISCELLANEOUS TIME FACTORS (CARD TYPE #4/2)

VARIABLE	VALUE	EXPLANATION
STATE	0	THE STATE OF EACH BASE'S CAPABILITY TO GENERATE SORTIES IS NOT COMPUTED DAILY
SELECT*	0	ALL SORTIES DEMANDED BY BASE. SELECT NOT APPLICABLE
MULTI1	0	ONLY ONE MOB. MULTI1 NOT APPLICABLE
MULTI2	0	ONLY ONE MOB. MULTI2 NOT APPLICABLE
GRACE	0	NO GRACE PERIOD FOR CODE 2 AND CODE 3
DONTCK	0	THE IDENTIFICATION NUMBERS ON THE TSARINA GENERATED TYPE #40 CARDS. AND THE TSARINA "HIT DATA" ARE COMPARED AND EXECUTION IS TERMINATED IF THEY DO NOT AGREE
NOSAVE	0	RECORDS ARE SAVED FOR PARTS THAT BREAK AFTER AN AIR ATTACK HAS CLOSED THE SHOP THAT WOULD NORMALLY PROCESS THE REPAIRS
NOCANN	0	PARTS THAT HAVE A PROBABLITY OF BEING BROKEN WHEN CANNIBALIZED GREATER THAN 0 PERCENT (NOCANN) WILL NOT BE CANNIBALIZED
NOPOMO	0	THERE IS NO ADDITIONAL TASK TIME THAT IS REQUIRED AT A BASE OPERATING UNDER 66-1. WHEN THE DATA APPLIES TO 66-5 ACTIVITIES
FATAL CASUALTIES	0	NO CASUALTIES WITH CONVENTIONAL WEAPONS WILL BE FATALITIES
AIDA	0	CONTROLS THE INTERPRETATION OF BASE DAMAGE DATA
HR-TH	16 12	BETWEEN 0000 AND 1600 LOOK AHEAD 12 HOURS
HR-TH	20 20	BETWEEN 1600 AND 2000 LOOK AHEAD 20 HOURS
HR-TH	24 16	BETWEEN 2000 AND 2400 LOOK AHEAD 16 HOURS

II.14 SPARE VARIABLES (CARD TYPE #4/3)

VARIABLE	VALUE	EXPLANATION
*** NOT USED ***		

II.15 SPECIAL DTI INPUTS (CARD TYPE #4/4)

VARIABLE	VALUE	EXPLANATION
NDAYS	30	NUMBER OF DAYS IN THE TRIAL IS 30
ICASE	4	CASE NUMBER 4

CHAPTER III

RESOURCE REQUIREMENTS

III.1 AIRCRAFT, PART AND SUPPORT EQUIPMENT REPAIR DATA

III.1.1 SHOP DESCRIPTION LIST

TSAR SHOP	DESCRIPTION
1	FLIGHTLINE
2	AIRFRAME REPAIR
3	ELECTRICAL SYSTEMS
4	ENVIRONMENTAL SYSTEMS
5	EGRESS SYSTEMS
6	PNEUDRAULICS
7	ENGINE
8	AUTOPILOT
9	AVIONICS INSTRUMENTATION
10	SENSORS
11	WHEEL/TIRE
12	RADIO COMMUNICATION
13	RADAR NAVIGATION
14	E C M SYSTEMS
15	INERTIAL SYSTEMS
16	FIRE CONTROL
17	GUN REPAIR
18	MACHINE SHOP
19	WELDING SHOP

SHOP DESCRIPTION LIST (CONTINUED)

TSAR SHOP	DESCRIPTION
20	CAMERA SHOP
21	HEAVY REPAIR
22	MISSILE MAINTENANCE
23	FUEL SYSTEMS
24	PARACHUTE
28	A/C CONFIGURATION
30	MUNITIONS MAINTENANCE

III.1.2 DISTRIBUTED SHOP DESCRIPTIONS (CARD TYPE #37)

PARENT SHOP	DISTRIBUTED FACILITY NUMBER	CAPACITY	DESCRIPTION
1	NOT DISTRIBUTED	---	FLIGHTLINE
2	NOT DISTRIBUTED	---	AIRFRAME REPAIR
3		5	ELECTRICAL SYSTEMS
	70	20	DISTRIBUTED LOCATION
4		5	ENVIRONMENTAL SYSTEMS
	71	20	DISTRIBUTED LOCATION
5		5	EGRESS SYSTEMS
	72	20	DISTRIBUTED LOCATION
6		5	PNEUDRAULICS
	73	10	DISTRIBUTED LOCATION
	74	10	DISTRIBUTED LOCATION
7	NOT DISTRIBUTED	---	ENGINE
8		5	AUTOPILOT
	75	20	DISTRIBUTED LOCATION
9		5	AVIONICS/INSTRUMENTATION
	76	20	DISTRIBUTED LOCATION
10		5	SENSORS
	77	20	DISTRIBUTED LOCATION
11		5	WHEEL/TIRE
	78	20	DISTRIBUTED LOCATION
12		5	RADIO COMMUNICATION
	79	20	DISTRIBUTED LOCATION
13		5	RADAR NAVIGATION
	80	20	DISTRIBUTED LOCATION
14		5	ECM SYSTEMS
	81	7	DISTRIBUTED LOCATION
	82	7	DISTRIBUTED LOCATION
	83	6	DISTRIBUTED LOCATION
15		5	INTERNAL SYSTEMS
	84	5	DISTRIBUTED LOCATION
16		5	FIRE CONTROL
	85	20	DISTRIBUTED LOCATION
17		5	GUN REPAIR
	86	20	DISTRIBUTED LOCATION
18		5	MACHINE SHOP
	87	10	DISTRIBUTED LOCATION
	88	10	DISTRIBUTED LOCATION

RESOURCE REQUIREMENTS
AIRCRAFT, PART AND SUPPORT EQUIPMENT REPAIR DATA

PARENT SHOP	DISTRIBUTED FACILITY NUMBER	CAPACITY	DESCRIPTION
19			WELDING SHOP
	89	10	DISTRIBUTED LOCATION
	90	10	DISTRIBUTED LOCATION
20		5	CAMERA SHOP
	91	20	DISTRIBUTED LOCATION
21		5	HEAVY REPAIR
	92	10	DISTRIBUTED LOCATION
	93	10	DISTRIBUTED LOCATION
22		5	MISSILE MAINTENANCE
	98	10	DISTRIBUTED LOCATION
	99	10	DISTRIBUTED LOCATION
23		5	FUEL SYSTEMS
	95	7	DISTRIBUTED LOCATION
	96	6	DISTRIBUTED LOCATION
	97	7	DISTRIBUTED LOCATION
24	NOT DISTRIBUTED	---	PARACHUTE
30		5	MUNITIONS BUILDUP/CE
	101	5	DISTRIBUTED LOCATION
	102	5	DISTRIBUTED LOCATION
	103	5	DISTRIBUTED LOCATION

III.1.3 SHOP/TASK SEQUENCE DATA (CARD TYPE #29)

THE FOLLOWING PLOT GRAPHICALLY REPRESENTS THE SHOP/TASK SEQUENCE OF THE F-4E DATA BASE.

RESOURCE REQUIREMENTS
AIRCRAFT, PART AND SUPPORT EQUIPMENT REPAIR DATA

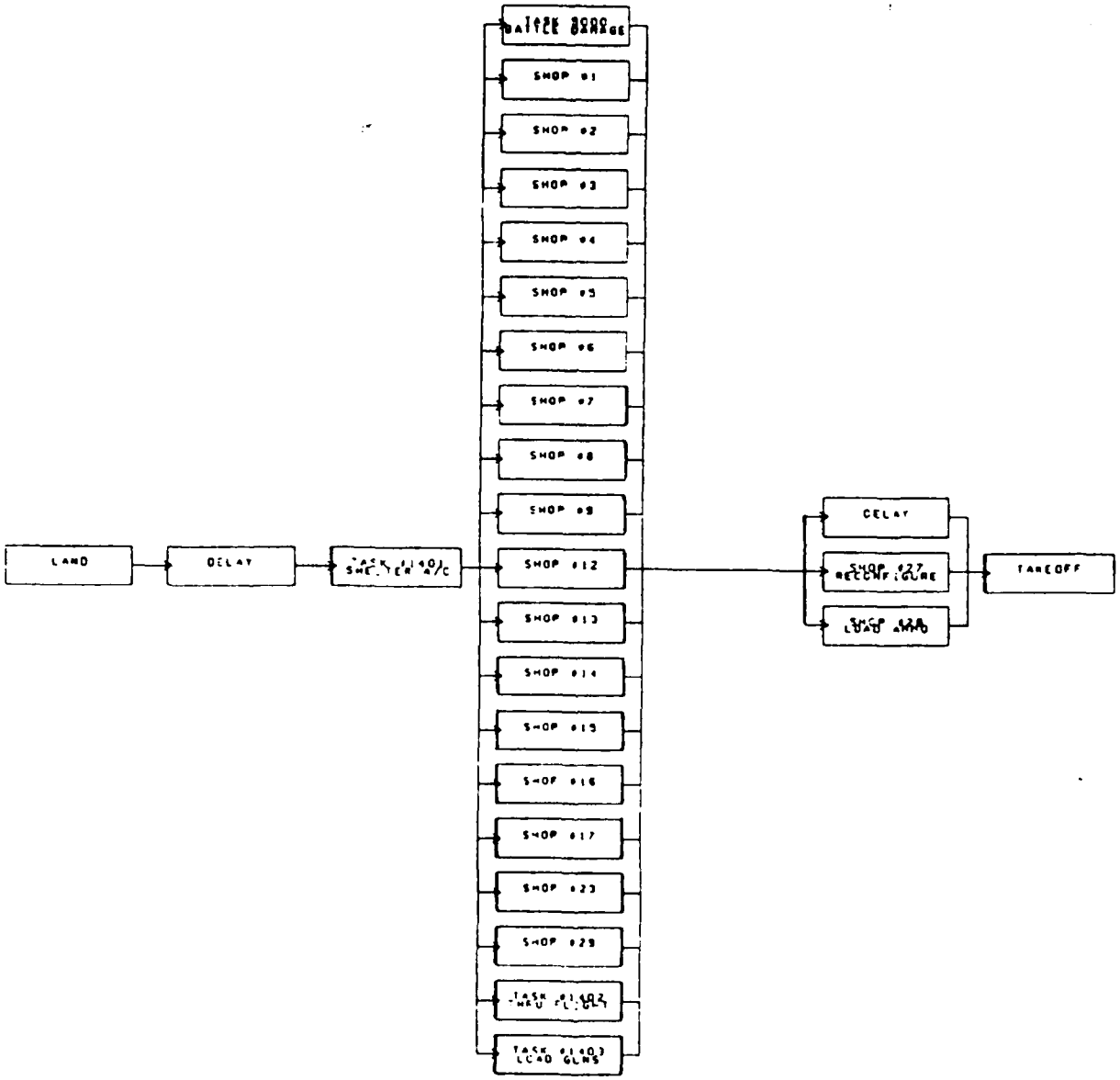

FIGURE 1

III.1.4 SHOP DATA

III.1.4.1 TSAR SHOP #1 -- FLIGHT LINE -

BEGINNING OF DAY SHIFT IS 0600 (CARD TYPE #18/1)
BREAK RATE MODIFIER = 100% (CARD TYPE #18/2)
PART ADMINISTRATIVE DELAY = 36 HOURS (CARD TYPE #47)

SHOP RESOURCE DATA (CARD TYPES #21 AND #22)

PERSONNEL DATA (MOB)

TSAR PERSONNEL TYPE	DAY SHIFT	NIGHT SHIFT	TOTAL	TARGETED	AFSC	DESCRIPTION
1	60	40	100	100	431X1C	SQUADRON #1
31	60	40	100	100	431X1C	SQUADRON #2
51	60	40	100	100	431X1C	SQUADRON #3
100	100	100	200	20		SECURITY POLICE
102	50	50	100	20		GENERAL SUPPORT
103	50	50	100	20		OPS PERSONNEL
104	25	25	50	50		COMMUNICATIONS
7 TYPES	405	345	750	410	TOTALS	

PERSONNEL DATA (REAR MAINTENANCE BASE)

TSAR PERSONNEL TYPE	DAY SHIFT	NIGHT SHIFT	TOTAL	TARGETED	AFSC	DESCRIPTION
1	10	10	20	20	431X1C	SQUADRON #1
1 TYPE	10	10	20	20	TOTALS	

AGE DATA (MOB)

TSAR AGE TYPE	NUMBER	TARGETED	DESCRIPTION
1	2	2	FUEL HYDRANT
11	2	2	FUEL HYDRANT
21	2	2	FUEL HYDRANT
80	13	13	FUEL TRUCK
4 TYPES	19	19	TOTALS

RESOURCE REQUIREMENTS
AIRCRAFT, PART AND SUPPORT EQUIPMENT REPAIR DATA

SHOP TASK DATA (CARD TYPES #5, #7, #8, AND #10)

ON-EQUIPMENT TASKS

TSAR TASK #(NETWORK)	TASK PROB	TASK DESCRIPTION
1	.0588	TIRES
95	.0200	COCKPITS
232	.0169	WHEEL & BRAKE SYSTEM
261	.0078	ARRESTING GEAR SYSTEM
508	.0032	D-C SYSTEM
611	.0078	EXTERNAL FUEL SYSTEM
1205	.0032	STORAGE SYSTEM

TOTAL NUMBER OF ON-EQUIPMENT TASKS = 7
CUMULATIVE ON-EQUIPMENT PROBABILITY = .1177

EQUIPMENT REPAIR TASKS

TSAR AGE #	PROB	AGE DESCRIPTION	TASK DESCRIPTION
1	.0010	FUEL HYDRANT	REPAIR HYDRANT

TOTAL NUMBER OF EQUIPMENT REPAIR TASKS = 1

III 1.4.2 TSAR SHOP #2 --AIRFRAME REPAIR -

BEGINNING OF DAY SHIFT IS 0600 (CARD TYPE #18/1)
BREAK RATE MODIFIER = 100% (CARD TYPE #18/2)
PART ADMINISTRATIVE DELAY = 36 HOURS (CARD TYPE #47)

SHOP RESOURCE DATA (CARD TYPES #21 AND #22)

PERSONNEL DATA (MOB)

TSAR PERSONNEL TYPE	DAY SHIFT	NIGHT SHIFT	TOTAL	TARGETED	AFSC	DESCRIPTION
2	3	3	6	6	427X5	SQUADRON #1
32	3	3	6	6	427X5	SQUADRON #2
41	3	3	6	6		GEN. PURPOSE
52	3	3	6	6	427X5	SQUADRON #3
82	6	8	16	16	427X5	WING
5 TYPES	20	20	40	40	TOTALS	

PERSONNEL DATA (REAR MAINTENANCE BASE)

TSAR PERSONNEL TYPE	DAY SHIFT	NIGHT SHIFT	TOTAL	TARGETED	AFSC	DESCRIPTION
2	2	2	4	4	427X5	SQUADRON #1
41	1	1	2	2		GEN. PURPOSE
82	2	2	4	4	427X5	WING
3 TYPES	5	5	10	10	TOTALS	

SHOP TASK DATA (CARD TYPES #5, #7, #8, AND #10)

ON-EQUIPMENT TASKS

TSAR TASK #(NETWORK)	TASK PROB	TASK DESCRIPTION
6	.1493	FUSELAGE

TOTAL NUMBER OF ON-EQUIPMENT TASKS = 1
CUMULATIVE ON-EQUIPMENT PROBABILITY = .1493

RESOURCE REQUIREMENTS
AIRCRAFT, PART AND SUPPORT EQUIPMENT REPAIR DATA

PART REPAIR TASK (CARD TYPE #8/1)

PART NO	WUC CODE	PART DESCRIPTION	TASK DESCRIPTION
3	Q111BJ	FAIRING, MUZZLE BLAST	REPAIR FAIRING
5	Q111BQ	NOT IN WUC MANUAL	REPAIR
6	Q111C3	DOOR, HYD & PNEUMATIC	REPAIR DOOR
7	Q111CA	NOT IN WUC MANUAL	REPAIR
8	Q111CP	DOOR, DATA LINK ACCESS	REPAIR DOOR
9	Q111DC	DOOR, (26 L/R)	REPAIR DOOR
10	Q111FC	SEAL ASSY, AFT MISS CAVITY	REPAIR SEAL
11	Q111FG	FAIR ASSY, AFT ENG KEEL	REPAIR FAIRING
12	Q111FH	FAIR ASSY, AFT MISS WELL	REPAIR FAIRING
13	Q111FU	LINK, DROP-OUT	REPAIR LINK
14	Q111FY	FAIR, CENTER STORES RACK ACC	REPAIR FAIRING
15	Q111G4	DOOR (74 L/R)	REPAIR DOOR
16	Q111GA	DOOR, STARTER (138)	REPAIR DOOR
17	Q111GC	DOOR, STARTER EXHAUST (78)	REPAIR DOOR
18	Q111GQ	DOOR, FUEL & HYDRAULIC ACCESS	REPAIR DOOR
19	Q111GR	DOOR, ENGINE ACCESS (82 L/R)	REPAIR DOOR
20	Q111GS	DOOR, ENGINE ACCESS (83 L/R)	REPAIR DOOR
21	Q111GU	DOOR, ENGINE ACCESS (92 L/R)	REPAIR DOOR
22	Q111HA	DOOR, ENG AIR & ACCESSORIES	REPAIR DOOR
23	Q111HC	DOOR, ENGINE ACCESS (96 L/R)	REPAIR DOOR
24	Q111HD	DOOR (37 L/R)	REPAIR DOOR
25	Q111HE	DOOR (38 L/R)	REPAIR DOOR
26	Q111HM	DOOR (54 L/R)	REPAIR DOOR
27	Q111HQ	DOOR (80)	REPAIR DOOR
28	Q111KD	TAIL CONE	REPAIR TAIL CONE
29	Q111KE	PANEL, JET BLAST NO. 1	REPAIR PANEL
30	Q111KF	PANEL, JET BLAST NO. 2	REPAIR PANEL
31	Q111KG	PANEL, JET BLAST NO. 3	REPAIR PANEL
32	Q111KH	PANEL, JET BLAST NO. 4	REPAIR PANEL
33	Q111KJ	PANEL, JET BLAST NO. 5	REPAIR PANEL
34	Q111KT	PANEL ASSY, LOWER TAIL CONE	REPAIR PANEL
35	Q1122B	DOOR (75 L/R)	REPAIR DOOR
37	Q1123A	WING TIP ASSEMBLY, FOWARD	REPAIR ASSEMBLY
40	Q1132C	RING ASSY, VARIABLE BELLMOUTH	REPAIR ASSYMBLY
44	Q1211R	PANEL PEDESTAL	REPAIR PEDESTAL
45	Q1212A	CHART & COMPUTER STOWAGE CASE	REPAIR CASE
47	Q1212G	FLOORING AND PANELS	REPAIR FLOORING
48	Q12265	CONTAINER, DROGUE(REMOVABLE)	REPAIR CONTAINER
55	Q12350	AFT CANOPY ASSEMBLY	REPAIR ASSEMBLY
69	Q13230	DOORS, MAIN LAND GEAR RIGHT	REPAIR DOORS
71	Q1323D	DOOR ASSEMBLY, GEAR STRUT	REPAIR ASSEMBLY
72	Q1323E	DOOR ASSEMBLY, OUTBOARD	REPAIR ASSEMBLY
73	Q1323F	DOOR ASSEMBLY, INBOARD	REPAIR ASSEMBLY
74	Q13240	DOORS, MAIN LAND GEAR LEFT	REPAIR DOORS
75	Q13320	DOOR, NOSE GEAR & UPLATCH MECH	REPAIR DOOR
76	Q1332H	DOOR, NOSE GEAR, FOWARD	REPAIR DOOR
87	Q1344A	BRAKE PRESSURE PLATE ASSY	REPAIR ASSEMBLY
91	Q1344K	BRAKE BACKING PLATE	REPAIR PLATE
93	Q1352A	ARRESTING GEAR FAIRING ASSY	REPAIR ASSEMBLY
95	Q14210	AILERON ASSEMBLY	REPAIR ASSEMBLY
104	Q14410	RUDDER	REPAIR RUDDER
105	Q1441A	HORN, RUDDER	REPAIR HORN
115	Q14610	SPEED BRAKE	REPAIR BRAKE
116	Q1461A	SPEED BRAKE UPPER SKIN	REPAIR SKIN
168	Q4624A	PYLON ASSEMBLY	REPAIR ASSEMBLY
414	Q9321C	DOOR 107	REPAIR DOOR

TOTAL NUMBER OF PART REPAIR TASKS = 56

III.1.4.3 TSAR SHOP #3 -- ELECTRICAL SYSTEMS -

BEGINNING OF DAY SHIFT IS 0600 (CARD TYPE #18/1)
BREAK RATE MODIFIER = 100% (CARD TYPE #18/2)
PART ADMINISTRATIVE DELAY = 36 HOURS (CARD TYPE #47)

SHOP RESOURCE DATA (CARD TYPES #21 AND #22)

PERSONNEL DATA (MOB)

TSAR PERSONNEL TYPE	DAY SHIFT	NIGHT SHIFT	TOTAL	TARGETED	AFSC	DESCRIPTION
3	4	3	7	7	423XO	SQUADRON #1
33	4	3	7	7	423XO	SQUADRON #2
53	4	3	7	7	423XO	SQUADRON #3
83	5	4	9	9	423XO	WING
4 TYPES	17	13	30	30	TOTALS	

PERSONNEL DATA (REAR MAINTENANCE BASE)

TSAR PERSONNEL TYPE	DAY SHIFT	NIGHT SHIFT	TOTAL	TARGETED	AFSC	DESCRIPTION
3	2	2	4	4	423XO	SQUADRON #1
83	1	1	2	2	423XO	WING
2 TYPES	3	3	6	6	TOTALS	

SHOP TASK DATA (CARD TYPES #5, #7, #8, AND #10)

ON-EQUIPMENT TASKS

TSAR TASK #(NETWORK)	TASK PROB	TASK DESCRIPTION
502	.0032	MAIN POWER SUPPLY, AC
521	.0074	GENERATOR SYSTEM, 30-KVA
529	.0169	INTERIOR LIGHTING SYSTEM
544	.0192	EXTERIOR LIGHTING SYSTEM
687	.0064	FIRE WARN AND OVERHEAT SYS

TOTAL NUMBER OF ON-EQUIPMENT TASKS = 5
CUMULATIVE ON-EQUIPMENT PROBABILITY = .0531

RESOURCE REQUIREMENTS
AIRCRAFT, PART AND SUPPORT EQUIPMENT REPAIR DATA

PART REPAIR TASKS (CARD TYPE #8/1)

PART NO	WUC CODE	PART DESCRIPTION	TASK DESCRIPTION
84	Q1343B	ANTI-SKID SYS CNTL BOX	REPAIR CONTROL BOX
85	Q1343E	ANTI-SKID SENSOR	REPAIR SENSOR
139	Q42152	MISC RELAY PANEL NO. 6	REPAIR PANEL
140	Q42160	CIRCUIT BREAKER PANEL NO. 1	REPAIR PANEL
142	Q42230	FREQ & LOAD CNTL BOX 693134	REPAIR BOX
143	Q42240	FREQ & LOAD CNTL BOX 538D888	REPAIR BOX
144	Q42330	BATTERY, NICKEL CADMIUM	REPAIR BATTERY
145	Q42610	GENERATOR, 30 KVA, 400 CYCLE	REPAIR GENERATOR
146	Q42640	SUPERVISORY PANEL 21B30-5A	REPAIR PANEL
147	Q42650	SUPERVISORY PANEL 21B30-3CX	REPAIR PANEL
149	Q4411G	MASTER CAUTION LIGHT	REPAIR LIGHT
151	Q4411M	LIGHTS, COCKPIT, FLOOD	REPAIR LIGHTS
152	Q4412A	PANEL, COCKPIT INTER. LIGHT	REPAIR PANEL
153	Q44220	FUSELAGE LIGHTS	REPAIR LIGHTS
154	Q4423C	WING TIP TAPE LIGHTS	REPAIR LIGHTS
170	Q4631F	AIR REFUELING AMPLIFIER,IFR	REPAIR AMPLIFIER

TOTAL NUMBER OF PART REPAIR TASKS = 16

III.1.4.4 TSAR SHOP #4 -- ENVIRONMENTAL SYSTEMS -

BEGINNING OF DAY SHIFT IS 0600. (CARD TYPE #18/1)
BREAK RATE MODIFIER = 100% (CARD TYPE #18/2)
PART ADMINISTRATIVE DELAY = 36 HOURS (CARD TYPE #47)

SHOP RESOURCE DATA (CARD TYPES #21 AND #22)

PERSONNEL DATA (MOB)

TSAR PERSONNEL TYPE	DAY SHIFT	NIGHT SHIFT	TOTAL	TARGETED	AFSC	DESCRIPTION
4	3	3	6	6	423X1	SQUADRON #1
34	3	3	6	6	423X1	SQUADRON #2
54	3	3	6	6	423X1	SQUADRON #3
84	2	2	4	4	423X1	WING
4 TYPES	11	11	22	22	TOTALS	

PERSONNEL DATA (REAR MAINTENANCE BASE)

TSAR PERSONNEL TYPE	DAY SHIFT	NIGHT SHIFT	TOTAL	TARGETED	AFSC	DESCRIPTION
4	2	2	4	4	423X1	SQUADRON #1
84	1	1	2	2	423X1	WING
2 TYPES	3	3	6	6	TOTALS	

SHOP TASK DATA (CARD TYPES #5, #7, #8, AND #10)

ON-EQUIPMENT TASKS

TSAR TASK #(NETWORK)	TASK PROB	TASK DESCRIPTION
442	.0244	AIR CONDITIONING
458	.0036	PRESSURIZATION
470	.0012	RAIN REMOVAL SYSTEM
475	.0032	ANTI-G SYSTEM
667	.0054	LIQUID OXYGEN SYSTEM
678	.0196	OXYGEN DISTRIBUTION SYS

TOTAL NUMBER OF ON-EQUIPMENT TASKS = 6
CUMULATIVE ON-EQUIPMENT PROBABILITY = .0574

RESOURCE REQUIREMENTS
AIRCRAFT, PART AND SUPPORT EQUIPMENT REPAIR DATA

PART REPAIR TASKS (CARD TYPE #8/1)

PART NO	WUC CODE	PART DESCRIPTION	TASK DESCRIPTION
124	Q4112B	CABIN COOLING TURBINE	REPAIR TURBINE
125	Q4112N	CABIN MOISTURE SEPARATOR	REPAIR SEPARATOR
126	Q4112O	CABIN ANTI-ICING CONTROL	REPAIR CONTROL
127	Q4114F	EQUIPMENT HEAT EXCHANGER	REPAIR EXCHANGER
128	Q4114G	EQUIPMENT COOLING TURBINE	REPAIR TURBINE
129	Q4114H	EJECTOR VALVE, GROUND COOL	REPAIR VALVE
130	Q4114J	VALVE, TURBINE BY-PASS	REPAIR VALVE
132	Q4121F	REGULATOR, CABIN PRESSURE	REPAIR REGULATOR
176	Q471AB	CONTAINER, LIQUID OXYGEN	REPAIR CONTAINER
177	Q472AO	INDICATOR, OXYGEN QUANTITY	REPAIR INDICATOR
178	Q472DO	REGULATOR, DILUTER DEMAND	REPAIR REGULATOR
179	Q472FO	WIRE HARNESS, CONVERT PROBE	REPAIR HARNESS
180	Q472GO	REGULATOR, DILUTER DEMAND	REPAIR REGULATOR

TOTAL NUMBER OF PART REPAIR TASKS = 13

III.1.4.5 TSAR SHOP #5 -- EGRESS SYSTEMS -

BEGINNING OF DAY SHIFT IS 0600 (CARD TYPE #18/1)
BREAK RATE MODIFIER = 100% (CARD TYPE #18/2)
PART ADMINISTRATIVE DELAY = 36 HOURS (CARD TYPE #47)

SHOP RESOURCE DATA (CARD TYPES #21 AND #22)

PERSONNEL DATA (MOB)

TSAR PERSONNEL TYPE	DAY SHIFT	NIGHT SHIFT	TOTAL	TARGETED	AFSC	DESCRIPTION
75	14	13	27	27	423X2	WING
1 TYPE	14	13	27	27	TOTALS	

PERSONNEL DATA (REAR MAINTENANCE BASE)

TSAR PERSONNEL TYPE	DAY SHIFT	NIGHT SHIFT	TOTAL	TARGETED	AFSC	DESCRIPTION
75	4	2	6	6	423X2	WING
1 TYPE	4	2	6	6	TOTALS	

SHOP TASK DATA (CARD TYPES #5, #7, #8, AND #10)

ON-EQUIPMENT TASKS

TSAR TASK #(NETWORK)	TASK PROB	TASK DESCRIPTION
108	.0145	EJECTION SEAT
119	.1149	CANOPY SYSTEM
1201	.0031	91200
1216	.0011	96100
1220	.0185	961XX
1223	.0026	MISC AIRCRAFT EXPLOSIVE DEV

TOTAL NUMBER OF ON-EQUIPMENT TASKS = 6
CUMULATIVE ON-EQUIPMENT PROBABILITY = .1547

III.1.4.6 TSAR SHOP #6 -- PNEUDRAULICS -

BEGINNING OF DAY SHIFT IS 0600. (CARD TYPE #18/1)
BREAK RATE MODIFIER = 100% (CARD TYPE #18/2)
PART ADMINISTRATIVE DELAY = 36 HOURS (CARD TYPE #47)

SHOP RESOURCE DATA (CARD TYPES #21 AND #22)

PERSONNEL DATA (MOE)

TSAR PERSONNEL TYPE	DAY SHIFT	NIGHT SHIFT	TOTAL	TARGETED	AFSC	DESCRIPTION
6	4	3	7	7	423X4	SQUADRON #1
36	4	3	7	7	423X4	SQUADRON #2
56	4	3	7	7	423X4	SQUADRON #3
86	4	3	7	7	423X4	WING
4 TYPES	16	12	28	28	TOTALS	

PERSONNEL DATA (REAR MAINTENANCE BASE)

TSAR PERSONNEL TYPE	DAY SHIFT	NIGHT SHIFT	TOTAL	TARGETED	AFSC	DESCRIPTION
6	2	2	4	4	423X4	SQUADRON #1
86	1	1	2	2	423X4	WING
2 TYPES	3	3	6	6	TOTALS	

SHOP TASK DATA (CARD TYPES #5, #7, #8, AND #10)

ON-EQUIPMENT TASKS

TSAR TASK #(NETWORK)	TASK PROB	TASK DESCRIPTION
153	.0070	LANDING GEAR SYSTEM
177	.0400	MAIN LANDING GEAR
372	.0159	FLAP SYSTEM
396	.0083	SPEED BRAKE SYSTEM
557	.0192	HYDRAULIC SYSTEMS
581	.0078	PNEUMATIC SYSTEM

TOTAL NUMBER OF ON-EQUIPMENT TASKS = 6
CUMULATIVE ON-EQUIPMENT PROBABILITY = .0982

PART REPAIR TASKS (CARD TYPE #8/1)

PART NO	WUC CODE	PART DESCRIPTION	TASK DESCRIPTION
39	Q1131J	VALVE, SERVO L/R	REPAIR VALVE
41	Q1132D	ACTUATOR, BYPASS BELLMOUTH	REPAIR ACTUATOR
42	Q1133B	ACTUATOR, AIR DOOR CYL ASSY	REPAIR ACTUATOR
43	Q1133D	VALVE ASSY, AIR DOOR	REPAIR ASSEMBLY
50	Q1231N	CANOPY AIR STORAGE BOTTLE	REPAIR BOTTLE
51	Q1233K	CYLINDER, CANOPY PNEUM, FOWARD	REPAIR CYLINDER
52	Q1233P	CANOPY VISCOUS DAMPER, FOWARD	REPAIR DAMPER
53	Q1234B	DUMP VALVE, CANOPY EMERG FOWARD	REPAIR VALVE
54	Q1234C	PNEUMATIC BOTTLE, EMERGENCY	REPAIR BOTTLE
57	Q1236N	CANOPY VISCUOS DAMPER, AFT	REPAIR DAMPER
58	Q1237B	DUMP VALVE, CANOPY EMERG AFT	REPAIR VALVE
59	Q1237C	AFT PNEUMATIC BOTTLE	REPAIR BOTTLE
60	Q1311C	LANDING GEAR SWIVELS	REPAIR SWIVELS
61	Q1312A	LAND GEAR VALVE SELECTOR, P/N	REPAIR SELECTOR
62	Q1315C	BOTTLE, AIR EMERG LAND GEAR	REPAIR BOTTLE
63	Q1321A	RIGHT M L GEAR SHOCK STRUT	REPAIR STRUT
64	Q1321H	RIGHT M L GEAR CYLINDER, UPLCK	REPAIR CYLINDER
65	Q1321M	RIGHT MLG SIDE BRACE ACTUATOR	REPAIR ACTUATOR
66	Q1322O	MAIN LEFT LANDING GEAR	REPAIR GEAR
67	Q1322A	LEFT M L GEAR SHOCK STRUT	REPAIR STRUT
70	Q1323A	CYLINDER, HYDR INBOARD DOOR	REPAIR CYLINDER
77	Q1334A	NOSE GEAR STEER, CONPENS POWER	REPAIR UNIT
78	Q1334B	NOSE GEAR STEER, POWER UNIT ST	REPAIR UNIT
79	Q1334J	VALVE, NOSE GEAR STEER SELECTOR	REPAIR VALVE
80	Q1341A	VALVE, BRAKE CONTROL	REPAIR VALVE
82	Q1342E	ACCUMULATOR, EMERGENCY BRAKE	REPAIR ACCUMULATOR
83	Q1343A	VALVE, ANTI-SKID CONTROL	REPAIR VALVE
86	Q1344O	BRAKE ASSEMBLY	REPAIR ASSEMBLY
90	Q1344J	HOUSING, BRAKE ASSEMBLY	REPAIR HOUSING
92	Q1351A	CYLINDER, ACTUATOR ARREST GEAR	REPAIR CYLINDER
96	Q1422A	L-H AILERON VISCUOS DAMPER	REPAIR DAMPER
97	Q1422B	AILERON POWER CONTROL CYLIND	REPAIR CYLINDER
100	Q1428A	LATERAL SERIES SERVO ACTUATOR	REPAIR ACTUATOR
101	Q1432F	STABILITOR POWER CONTROL CYL	REPAIR CYLINDER
102	Q1436A	AUX POWER UNIT, HYDRAULIC	REPAIR UNIT
103	Q1436D	MANIFOLD, AUX POWER SYSTEM	REPAIR MANIFOLD
106	Q1442B	SERVO ACTUATOR, AILERON-RUDDER	REPAIR ACTUATOR
107	Q1442C	CYLINDER, POWER CONTROL	REPAIR CYLINDER
108	Q1442D	HYDRAULIC DAMPER, RUDDER	REPAIR DAMPER
109	Q1442E	ROTARY DAMPER, RUDDER	REPAIR DAMPER
110	Q1442F	CYLINDER, POWER CNTL P/N	REPAIR CYLINDER
113	Q1456A	AIR SELECTOR VALVE, EMERG FLAP	REPAIR VALVE
114	Q1456E	AIR STORAGE BOTTLE	REPAIR BOTTLE
117	Q1462D	CYLINDER,POWER SPEED BRAKE	REPAIR CYLINDER
118	Q1462F	SWIVELS, HYDRAULIC	REPAIR SWIVELS
119	Q148DA	VALVE, SLAT POSITION SELECTOR	REPAIR VALVE
121	Q148DH	ACTUATOR, INBOARD SLAT PNEUM	REPAIR ACTUATOR
122	Q148DJ	ACTUATOR, OUTBOARD SLAT PNUEM	REPAIR ACTUATOR
123	Q148DQ	SWIVEL ASSEMBLY	REPAIR ASSEMBLY
155	Q4511A	RESERVOIR, HYDRAULIC NO.1	REPAIR RESERVOIR
156	Q4511B	PUMP, HYDRAULIC NO. 1	REPAIR PUMP
159	Q4512B	PUMP, HYDRAULIC NO. 2	REPAIR PUMP
161	Q4513C	PUMP, HYDRAULIC GROUP 1	REPAIR PUMP
162	Q4513L	HYDRAULIC FLOW REGULATOR	REPAIR REGULATOR
165	Q4521A	COMPRESSOR, HYDRAULIC DRIVEN	REPAIR COMPRESSOR
166	Q4521C	SEPARATOR, MOISTURE, PNUEMATIC	REPAIR SEPARATOR
167	Q4521H	PUMP, OIL, AIR COMPRESSOR	REPAIR PUMP
169	Q4631D	AIR REFUEL ACTUAT RECEPTACLE	REPAIR RECEPTACLE
378	Q75E1F	DRIVE, HYDRAULIC, GUN PALLET	REPAIR DRIVE
379	Q75E1J	FILTER HYDRAULIC, GUN PALLET	REPAIR FILTER

TOTAL NUMBER OF PART REPAIR TASKS = 60

III.1 4.7 TSAR SHOP #7 -- ENGINE -

BEGINNING OF DAY SHIFT IS 0600. (CARD TYPE #18/1)
BREAK RATE MODIFIER = 100% (CARD TYPE #18/2)
PART ADMINISTRATIVE DELAY = 36 HOURS (CARD TYPE #47)

SHOP RESOURCE DATA (CARD TYPES #21 AND #22)

PERSONNEL DATA (MOB)

TSAR PERSONNEL TYPE	DAY SHIFT	NIGHT SHIFT	TOTAL	TARGETED	AFSC	DESCRIPTION
7	8	8	16	16	426X2	SQUADRON #1
37	8	8	16	16	426X2	SQUADRON #2
57	8	8	16	16	426X2	SQUADRON #3
87	34	17	51	51	426X2	WING
4 TYPES	58	41	99	99	TOTALS	

PERSONNEL DATA (REAR MAINTENANCE BASE)

TSAR PERSONNEL TYPE	DAY SHIFT	NIGHT SHIFT	TOTAL	TARGETED	AFSC	DESCRIPTION
7	4	4	8	8	426X2	SQUADRON #1
87	2	2	4	4	426X2	WING
2 TYPES	6	6	12	12	TOTALS	

AGE DATA (MOB)

TSAR AGE TYPE	NUMBER	TARGETED	DESCRIPTION
75	5	5	ENGINE STAND
1 TYPE	5	5	TOTALS

RESOURCE REQUIREMENTS
AIRCRAFT, PART AND SUPPORT EQUIPMENT REPAIR DATA

SHOP TASK DATA (CARD TYPES #5, #7, #8, AND #10)

ON-EQUIPMENT TASKS

TSAR TASK #(NETWORK)	TASK PROB	TASK DESCRIPTION
1303	.0752	BASIC J79 TURBO JET ENGINE

TOTAL NUMBER OF ON-EQUIPMENT TASKS = 1
CUMULATIVE ON-EQUIPMENT PROBABILITY = .0752

III.1.4.8 TSAR SHOP #8 -- AUTOPILOT -

BEGINNING OF DAY SHIFT IS 0600. (CARD TYPE #18/1)
BREAK RATE MODIFIER = 100% (CARD TYPE #18/2)
PART ADMINISTRATIVE DELAY = 36 HOURS (CARD TYPE #47)

SHOP RESOURCE DATA (CARD TYPES #21 AND #22)

PERSONNEL DATA (MOB)

TSAR PERSONNEL TYPE	DAY SHIFT	NIGHT SHIFT	TOTAL	TARGETED	AFSC	DESCRIPTION
8	2	2	4	4	325XO	SQUADRON #1
38	2	2	4	4	325XO	SQUADRON #2
58	2	2	4	4	325XO	SQUADRON #3
88	2	2	4	4	325XO	WING
4 TYPES	8	8	16	16	TOTALS	

PERSONNEL DATA (REAR MAINTENANCE BASE)

TSAR PERSONNEL TYPE	DAY SHIFT	NIGHT SHIFT	TOTAL	TARGETED	AFSC	DESCRIPTION
8	2	2	4	4	325XO	SQUADRON #1
88	2	2	4	4	325XO	WING
2 TYPES	4	4	8	8	TOTALS	

SHOP TASK DATA (CARD TYPES #5, #7, #8, AND #10)

ON-EQUIPMENT TASKS

TSAR TASK #(NETWORK)	TASK PROB	TASK DESCRIPTION
746	.0023	AUTO FLIGHT CONTROL SYSTEM
753	.0222	FLIGHT CONTROL GROUP AN/ASA-32

TOTAL NUMBER OF ON-EQUIPMENT TASKS = 2
CUMULATIVE ON-EQUIPMENT PROBABILITY = .0245

RESOURCE REQUIREMENTS
AIRCRAFT, PART AND SUPPORT EQUIPMENT REPAIR DATA

PART REPAIR TASKS (CARD TYPE #8/1)

PART NO	WUC CODE	PART DESCRIPTION	TASK DESCRIPTION
141	Q421DO	NOT IN WUC MANUAL	REPAIR
208	Q52110	AILERON-RUDDER INTERCONN	REPAIR INTERCONNECT
209	Q5211A	ARI AMPLIFIER	REPAIR AMPLIFIER
210	Q52240	AIRCRAFT ACCELEROMETER	REPAIR ACCELEROMETER
218	Q522EC	AMP, SERVO, ROLL, RIGHT	REPAIR AMPLIFIER

TOTAL NUMBER OF PART REPAIR TASKS = 5

III.1.4.9 TSAR SHOP #9 -- AVIONICS INSTRUMENTATION -

BEGINNING OF DAY SHIFT IS 0600. (CARD TYPE #18/1)
BREAK RATE MODIFIER = 100% (CARD TYPE #18/2)
PART ADMINISTRATIVE DELAY = 36 HOURS (CARD TYPE #47)

SHOP RESOURCE DATA (CARD TYPES #21 AND #22)

PERSONNEL DATA (MOB)

TSAR PERSONNEL TYPE	DAY SHIFT	NIGHT SHIFT	TOTAL	TARGETED	AFSC	DESCRIPTION
9	3	3	6	6	325X1	SQUADRON #1
39	3	3	6	6	325X1	SQUADRON #2
59	3	3	6	6	325X1	SQUADRON #3
89	3	2	5	5	325X1	WING
4 TYPES	12	11	23	23	TOTALS	

PERSONNEL DATA (REAR MAINTENANCE BASE)

TSAR PERSONNEL TYPE	DAY SHIFT	NIGHT SHIFT	TOTAL	TARGETED	AFSC	DESCRIPTION
9	2	2	4	4	325X1	SQUADRON #1
89	1	1	2	2	325X1	WING
2 TYPES	3	3	6	6	TOTALS	

SHOP TASK DATA (CARD TYPES #5, #7, #8, AND #10)

ON-EQUIPMENT TASKS

TSAR TASK #(NETWORK)	TASK PROB	TASK DESCRIPTION
478	.0076	RELAY PANELS
646	.0059	FUEL CONTROL SYSTEM
695	.0294	FLIGHT INSTRUMENT SYSTEM
708	.0213	NAVIGATIONAL INSTR SYSTEM
728	.0345	AIR DATA COMPUTER SYSTEM
769	.0333	VELOCITY, GRAVITY, HEIGHT
932	.0476	ATTITUDE REF BOMB COMPUTER SYS
950	.0039	SC ATTITUDE INDICATOR SYSTEM

TOTAL NUMBER OF ON-EQUIPMENT TASKS = 8
CUMULATIVE ON-EQUIPMENT PROBABILITY = .1835

PART REPAIR TASKS (CARD TYPE #8/1)

PART NO	WUC CODE	PART DESCRIPTION	TASK DESCRIPTION
112	Q1455N	AIR SPEED SWITCH, FLAP BLOW-UP	REPAIR SWITCH
120	Q148DB	CNTL UNIT, ELECTRONIC SLATS	REPAIR UNIT
157	Q4511M	INDICATOR, HYDRAULIC PRESSURE	REPAIR INDICATOR
163	Q4513N	PRESSURE INDICATOR, HYDRAULIC	REPAIR INDICATOR
164	Q4513P	PRESSURE TRANSMITTER, HYDRAUL	REPAIR TRANSMITTER
171	Q4642O	FUEL INDICATING SYSTEM	REPAIR SYSTEM
172	Q4642D	INDICATOR, FUEL QUANTITY	REPAIR INDICATOR
173	Q4642E	NOT IN WUC MANUAL	REPAIR
174	Q4642J	SIMULATOR, FUEL QUANTITY	REPAIR SUMULATOR
181	Q511AA	ACCELEROMETER	REPAIR ACCELEROMETER
182	Q511AB	AIR SPEED AND MACH NUMBER	REPAIR INSTRUMENT
183	Q511AD	VERTICAL VELOCITY	REPAIR INSTRUMENT
184	Q511AE	TRUE AIR SPEED	REPAIR INSTRUMENT
185	Q511AJ	ALTIMETER AAU-19 3252001	REPAIR ALTIMETER
186	Q511AK	ALTIMETER AAU-19 A4132210002	REPAIR ALTIMETER
187	Q511AL	ALTIMETER AAU-19 A4132210003	REPAIR ALTIMETER
188	Q511CA	TUBE, PITOT STATIC	REPAIR TUBE
189	Q512AB	COMPASS, STANDBY	REPAIR COMPASS
190	Q512CO	FLIGHT DIRECTOR GROUP	REPAIR GROUP
191	Q512CA	COMPUTER, FLIGHT DIRECTOR	REPAIR COMPUTER
192	Q512CG	CONTROL, ADJUSTMENT	REPAIR CONTROL
193	Q512CK	CONTROL MODE SELECTOR	REPAIR SELECTOR
194	Q512CL	INDICATOR, HORIZONTAL SITUAT	REPAIR INDICATOR
195	Q512CM	AMP, HORIZONTOL SITUAT INDIC	REPAIR AMPLIFIER
196	Q513AO	GENERATOR, AURAL TONE	REPAIR GENERATOR
198	Q513CO	AURAL STALL WARN CNTL PANEL	REPAIR PANEL
199	Q513EO	INDICATOR, ANGLE-OF-ATTACK	REPAIR INDICATOR
200	Q513FO	INDEXER LIGHT ASSEMBLIES	REPAIR ASSEMBLIES
202	Q513HB	STATIC PRESSURE COMPENSATOR	REPAIR COMPENSATOR
203	Q513HC	PRESSURE RATIO TRANSDUCER	REPAIR TRANSDUCER
204	Q513HD	LOGARITHMIC PRESSURE CONTROL	REPAIR CONTROLLER
205	Q513HE	MACH SECTOR RESISTOR & CAM MOD	REPAIR MODULE
206	Q513HH	COMPUTER AMPLIFIER	REPAIR AMPLIFIER
220	Q5511A	RECORDER, (VEL, GRAV, HGT)	REPAIR RECORDER
221	Q5511C	MAGAZINE, (VEL, GRAV, HGT)	REPAIR MAGAZINE
222	Q5515A	INDICATOR, STATISTICAL ACCELER	REPAIR INDICATOR
223	Q5515B	TRANSDUCER, STATIST ACCELER	REPAIR TRANSDUCER
286	Q7310O	ATTITUDE REFER BOMB COMPUTER	REPAIR COMPUTER
288	Q731CO	ADAPTER COMPENSATOR COMPASS	REPAIR COMPASS
289	Q731CA	SYNCRO ASSEMBLY	REPAIR ASSEMBLY
290	Q731DO	COMPUTER, BOMB RELEASE ANGLE	REPAIR COMPUTER
292	Q731FO	CONTROLLER COMPASS, C4781/AJB7	REPAIR COMPASS
294	Q731HO	INDICATOR, ATTITUDE REFERENCE	REPAIR INDICATOR
295	Q731KO	GYROSCOPE, RATE SWITCHING MC-1	REPAIR GYROSCOPE
296	Q731MO	DUAL TIMER MS27264	REPAIR TIMER
298	Q732AO	INDICATOR, STANDBY, VERT REFER	REPAIR INDICATOR
299	Q732CO	PANEL ASSY, STANDBY INVERTER	REPAIR ASSEMBLY

TOTAL NUMBER OF PART REPAIR TASKS = 47

III.1 4.10 TSAR SHOP #10 -- SENSORS -

BEGINNING OF DAY SHIFT IS 0600. (CARD TYPE #18/1)
BREAK RATE MODIFIER = 100% (CARD TYPE #18/2)
PART ADMINISTRATIVE DELAY = 36 HOURS (CARD TYPE #47)

SHOP RESOURCE DATA (CARD TYPES #21 AND #22)

PERSONNEL DATA (MOB)

TSAR PERSONNEL TYPE	DAY SHIFT	NIGHT SHIFT	TOTAL	TARGETED	AFSC	DESCRIPTION
90	8	6	14	14	322X2	WING
1 TYPES	8	6	14	14	TOTALS	

PERSONNEL DATA (REAR MAINTENANCE BASE)

TSAR PERSONNEL TYPE	DAY SHIFT	NIGHT SHIFT	TOTAL	TARGETED	AFSC	DESCRIPTION
90	1	1	2	2	322X2	WING
1 TYPE	1	1	2	2	TOTALS	

III.1.4.11 TSAR SHOP #11 -- WHEEL/TIRE -

BEGINNING OF DAY SHIFT IS 0600. (CARD TYPE #18/1)
BREAK RATE MODIFIER = 100% (CARD TYPE #18/2)
PART ADMINISTRATIVE DELAY = 36 HOURS (CARD TYPE #47)

SHOP RESOURCE DATA (CARD TYPES #21 AND #22)

PERSONNEL DATA (MOB)

TSAR PERSONNEL TYPE	DAY SHIFT	NIGHT SHIFT	TOTAL	TARGETED	AFSC	DESCRIPTION
11	4	2	6	6	431X1C	SQUADRON #2
1 TYPE	4	2	6	6	TOTALS	

PERSONNEL DATA (REAR MAINTENANCE BASE)

TSAR PERSONNEL TYPE	DAY SHIFT	NIGHT SHIFT	TOTAL	TARGETED	AFSC	DESCRIPTION
11	2	2	4	4	431X1C	SQUADRON #2
1 TYPE	2	2	4	4	TOTALS	

III.1.4.12 TSAR SHOP #12 -- RADIO COMMUNICATION -

BEGINNING OF DAY SHIFT IS 0600. (CARD TYPE #18/1)
BREAK RATE MODIFIER = 100% (CARD TYPE #18/2)
PART ADMINISTRATIVE DELAY = 36 HOURS (CARD TYPE #47)

SHOP RESOURCE DATA (CARD TYPES #21 AND #22)

PERSONNEL DATA (MOB)

TSAR PERSONNEL TYPE	DAY SHIFT	NIGHT SHIFT	TOTAL	TARGETED	AFSC	DESCRIPTION
12	3	3	6	6	328XO	SQUADRON #1
42	3	3	6	6	328XO	SQUADRON #2
62	3	3	6	6	328XO	SQUADRON #3
80	3	3	6	6	328XO	WING
4 TYPES	12	12	24	24	TOTALS	

PERSONNEL DATA (REAR MAINTENANCE BASE)

TSAR PERSONNEL TYPE	DAY SHIFT	NIGHT SHIFT	TOTAL	TARGETED	AFSC	DESCRIPTION
12	2	2	4	4	328XO	SQUADRON #1
80	1	1	2	2	328XO	WING
4 TYPES	3	3	6	6	TOTALS	

SHOP TASK DATA (CARD TYPES #5, #7, #8, AND #10)

ON-EQUIPMENT TASKS

TSAR TASK #(NETWORK)	TASK PROB	TASK DESCRIPTION
860	.0457	INTEGRATED ELECTRONIC CENTRAL
878	.0007	RADIO EQUIP. SECURE VOICE

TOTAL NUMBER OF ON-EQUIPMENT TASKS = 2
CUMULATIVE ON-EQUIPMENT PROBABILITY = .0464

RESOURCE REQUIREMENTS
AIRCRAFT, PART AND SUPPORT EQUIPMENT REPAIR DATA

PART REPAIR TASKS (CARD TYPE #8/1)

PART NO	WUC CODE	PART DESCRIPTION	TASK DESCRIPTION
134	Q4211B	WHEEL WELL SWITCH PANEL	REPAIR PANEL
226	Q6330O	NOT IN WUC MANUAL	REPAIR
227	Q6331O	"	
228	Q6331C	"	
229	Q6331H	"	
230	Q6331J	"	
234	Q6335C	"	
260	Q71LJO	INDICATOR, BEAR, DISTANCE	REPAIR INDICATOR
262	Q71LWO	MIKE ADAPTER ASSEMBLY	REPAIR ASSEMBLY
264	Q71MDO	NOT IN WUC MANUAL	REPAIR

TOTAL NUMBER OF PART REPAIR TASKS = 10

III.1.4.13 TSAR SHOP #13 -- RADAR NAVIGATION -
BEGINNING OF DAY SHIFT IS 0600. (CARD TYPE #18/1)
BREAK RATE MODIFIER = 100% (CARD TYPE #18/2)
PART ADMINISTRATIVE DELAY = 36 HOURS (CARD TYPE #47)

SHOP RESOURCE DATA (CARD TYPES #21 AND #22)

PERSONNEL DATA (MOB)

TSAR PERSONNEL TYPE	DAY SHIFT	NIGHT SHIFT	TOTAL	TARGETED	AFSC	DESCRIPTION
13	2	2	4	4	328X1	SQUADRON #1
43	2	2	4	4	328X1	SQUADRON #2
63	2	2	4	4	328X1	SQUADRON #3
81	6	6	12	12	328X1	WING
4 TYPES	12	12	24	24	TOTALS	

PERSONNEL DATA (REAR MAINTENANCE BASE)

TSAR PERSONNEL TYPE	DAY SHIFT	NIGHT SHIFT	TOTAL	TARGETED	AFSC	DESCRIPTION
13	2	2	4	4	328X1	SQUADRON #1
81	1	1	2	2	328X1	WING
2 TYPES	3	3	6	6	TOTALS	

SHOP TASK DATA (CARD TYPES #5, #7, #8, AND #10)

ON-EQUIPMENT TASKS

TSAR TASK #(NETWORK)	TASK PROB	TASK DESCRIPTION
837	.0847	INTEGRATED ELECTRONIC CENTRAL
881	.0901	INTERROGATOR SET AN/APX-76
892	.1235	MARK XII IFF EQUIPMENT
897	.0435	71TXX
898	.0039	INTERROGATOR SET AN/APX-81
903	.0250	AN/ARN-118 TACAN SYSTEM
914	.0556	RADAR ALTIMETER,AN/APN-155
926	.0003	SST-181X RADAR TRANSPONDER

TOTAL NUMBER OF ON-EQUIPMENT TASKS = 8
CUMULATIVE ON-EQUIPMENT PROBABILITY = .4266

RESOURCE REQUIREMENTS
AIRCRAFT, PART AND SUPPORT EQUIPMENT REPAIR DATA

PART REPAIR TASKS (CARD TYPE #8/1)

PART NO	WUC CODE	PART DESCRIPTION	TASK DESCRIPTION
236	Q71320	CONTROL, C10124/ARN-127	REPAIR CONTROL
266	Q71MGO	CONTROL, C-6280/APX TRANS	REPAIR CONTROL
268	Q71S00	INTERROGATOR SET AN/APX-76	REPAIR SET
270	Q71SBG	TRANSMITTER ASSEMBLY 2A2	REPAIR ASSEMBLY
272	Q71SDO	SYNCHRONIZER SN-416A/APX-76	REPAIR SYNCHRO
273	Q71Z00	AN/ARN-118 TACAN SYSTEM	REPAIR SYSTEM
275	Q71ZBO	ADAPTER MX9577/A OR MX-10070	REPAIR ADAPTER
278	Q71ZEO	MOUNT (DIGITAL TO ANALOG)	REPAIR MOUNT
279	Q72300	RADAR ALTIMETER, AN/APN-155	REPAIR ALTIMETER
281	Q723AQ	VARIABLE CAPACITY OSCILLATOR	REPAIR OSCILLATOR
283	Q723CO	ANTENNA, RECEIVER AS-1386	REPAIR ANTENNA
284	Q723DO	ANTENNA, TRANSMITTER AS-1442	REPAIR ANTENNA

NUMBER OF PART REPAIR TASKS = 12

III.1.4.14 TSAR SHOP #14 -- ECM SYSTEMS -

BEGINNING OF DAY SHIFT IS 0600. (CARD TYPE #18/1)
BREAK RATE MODIFIER = 100% (CARD TYPE #18/2)
PART ADMINISTRATIVE DELAY = 36 HOURS (CARD TYPE #47)

SHOP RESOURCE DATA (CARD TYPES #21 AND #22)

PERSONNEL DATA (MOB)

TSAR PERSONNEL TYPE	DAY SHIFT	NIGHT SHIFT	TOTAL	TARGETED	AFSC	DESCRIPTION
85	36	28	64	64	328X3	WING
1 TYPE	36	28	64	64	TOTALS	

PERSONNEL DATA (REAR MAINTENANCE BASE)

TSAR PERSONNEL TYPE	DAY SHIFT	NIGHT SHIFT	TOTAL	TARGETED	AFSC	DESCRIPTION
85	6	6	12	12	328X3	WING
1 TYPE	6	6	12	12	TOTALS	

SHOP TASK DATA (CARD TYPES #5, #7, #8, AND #10)

ON-EQUIPMENT TASKS

TSAR TASK #(NETWORK)	TASK PROB	TASK DESCRIPTION
1132	.1536	AN/ALE-40 CHAFF/FLARE
1149	.0862	RADAR WARNING RECEIVER,AN/ALR
1167	.0007	76K00
1175	.0014	C-6175 CONTROL INDICATOR
1182	.0046	AN/ALQ-119 ELECTRONIC CM

TOTAL NUMBER OF ON-EQUIPMENT TASKS = 5
CUMULATIVE ON-EQUIPMENT PROBABILITY = .2469

RESOURCE REQUIREMENTS
AIRCRAFT, PART AND SUPPORT EQUIPMENT REPAIR DATA

PART REPAIR TASKS (CARD TYPE #8/1)

PART NO	WUC CODE	PART DESCRIPTION	TASK DESCRIPTION
386	Q765OO	AN/ALE-40 CHAFF/FLARE DISPEN	REPAIR SYSTEM
387	Q765AO	CHAFF/FLARE PROGRAMMER	REPAIR PROGRAMMER
388	Q765AA	CHAFF MODULE ASSEMBLY	REPAIR ASSEMBLY
389	Q765BO	SEQUENCE SWITCH ASSEMBLY	REPAIR ASSEMBLY
390	Q765BA	DRIVER PCB	REPAIR DRIVER
391	Q765CO	SLAVE DISPENSER 134025-0001	REPAIR DISPENSER
392	Q765DO	CHAFF PAYLOAD MODULE 133896	REPAIR MODULE
393	Q765HO	MASTER DISPENSER 1340001-0001	REPAIR DISPENSER
394	Q765HB	CABLE ASSEMBLY 1333882-0002	REPAIR ASSEMBLY
395	Q765JO	COCKPIT CONTROL UNIT	REPAIR UNIT
396	Q76G99	NOC	
397	Q76GAO	SIGNAL PROCESSOR	REPAIR PROCESSOR
398	Q76GAB	READ ONLY MEMORY A2	REPAIR ROM
399	Q76GAD	DISPLAY DRIVER	REPAIR DRIVER
400	Q76GAE	VIDEO PROCESSOR A5	REPAIR PROCESSOR
401	Q76GAF	CPU A6	REPAIR CPU
402	Q76GBO	RECEIVER (R1854A)	REPAIR RECEIVER
403	Q76GCO	AMPLIFIER DETECTOR, AM=6639	REPAIR DETECTOR
404	Q76GCA	TRIPLEXER/LIMITER DETECTOR	REPAIR DETECTOR
405	Q76GCC	VIDEO AMPLIFIER A2, A4	REPAIR AMPLIFIER
406	Q76GCD	REGULATOR A7	REPAIR REGULATOR
407	Q76GDO	INDICATOR CONTROL (TDU)	REPAIR CONTROL
408	Q76GEO	AZIMUTH INDICATOR	REPAIR INDICATOR

TOTAL NUMBER OF PART REPAIR TASKS = 23

III.1.4.15 TSAR SHOP #15 -- INERTIAL SYSTEMS SHOP -

BEGINNING OF DAY SHIFT IS 0600. (CARD TYPE #18/1)
BREAK RATE MODIFIER = 100% (CARD TYPE #18/2)
PART ADMINISTRATIVE DELAY = 36 HOURS (CARD TYPE #47)

SHOP RESOURCE DATA (CARD TYPES #21 AND #22)

PERSONNEL DATA (MOB)

TSAR PERSONNEL TYPE	DAY SHIFT	NIGHT SHIFT	TOTAL	TARGETED	AFSC	DESCRIPTION
78	14	15	29	29	328X4	WING
1 TYPE	14	15	29	29	TOTALS	

PERSONNEL DATA (REAR MAINTENANCE BASE)

TSAR PERSONNEL TYPE	DAY SHIFT	NIGHT SHIFT	TOTAL	TARGETED	AFSC	DESCRIPTION
78	4	2	6	6	328X4	WING
1 TYPE	4	2	6	6	TOTALS	

SHOP TASK DATA (CARD TYPES #5, #7, #8, AND #10)

ON-EQUIPMENT TASKS

TSAR TASK #(NETWORK)	TASK PROB	TASK DESCRIPTION
957	.0633	COMPUTER SYSTEM AN/ASQ-91
970	.0001	DIGITAL MODULAR AVIONICS

TOTAL NUMBER OF ON-EQUIPMENT TASKS = 2
CUMULATIVE ON-EQUIPMENT PROBABILITY = .0634

RESOURCE REQUIREMENTS
AIRCRAFT, PART AND SUPPORT EQUIPMENT REPAIR DATA

PART REPAIR TASKS (CARD TYPE #8/1)

PART NO	WUC CODE	PART DESCRIPTION	TASK DESCRIPTION
238	Q71B1O	CONTROL COMPUTER CP723B/ASN	REPAIR COMPUTER
240	Q71B2A	AMPLIFIER A803, A804, A806	REPAIR AMPLIFIER
241	Q71B2C	PREAMPLIFIER A807	REPAIR PRAMPLIFIER
242	Q71B2E	RANGE COMPUTER MECH A810	REPAIR MECHANISM
243	Q71B3O	INDICATOR, GROUND SPEED	REPAIR INDICATOR
244	Q71H1O	CONTROL PANEL C-4779/ASN	REPAIR PANEL
245	Q71H2O	COMPUTER, NAVIGATIONAL	REPAIR COMPUTER
246	Q71H2A	ELECTRONIC SUBASSEMBLY	REPAIR SUBSASSEMBLY
247	Q71H3N	D-C AMPLIFIER	REPAIR AMPLIFIER
248	Q71H3U	SUMMING AMPLIFIER	REPAIR AMPLIFIER
249	Q71H4A	GYRO TEMPERATURE CONTROL	REPAIR CONTROL
250	Q71H4F	OVEN COMPON & ELECT ASSY	REPAIR ASSEMBLY
251	Q71H4L	POWER SUPPLY A25	REPAIR POW SUPPLY
252	Q71H4R	INTEGRATOR SHAFT A24	REPAIR SHAFT
254	Q71H5O	DISTRBUTION UNIT, OUT SIGNAL	REPAIR UNIT
255	Q71H5A	SERVO, TRUE HEADING A1	REPAIR SERVO
256	Q71H6O	PLATFORM, GYRO STABILIZED	REPAIR PLATFORM
257	Q71H6B	GYROSCOPE (UPPER)	REPAIR GYROSCOPE
300	Q73510	CONTROL, COMPUTER CURSOR	REPAIR CONTROL
301	Q73520	COMPUTER CONTROL C-6480	REPAIR CONTROL
302	Q73530	BALLISTICS COMPUTER	REPAIR COMPUTER
303	Q7352B	NOT IN WUC MANUAL	REPAIR
304	Q7353H	CROSS TRACK RANGE SERVOMECH	REPAIR SERVOMECH
305	Q7353V	DIRECT CURRENT AMPLIFIER	REPAIR AMPLIFIER
306	Q73540	COMPUTER CONTROL ASSEMBLY	REPAIR ASSEMBLY
307	Q73560	WEAPON DELIVERY PANEL	REPAIR PANEL
308	Q73GOO	DIGITAL MODULAR AVIONICS SYS	REPAIR SYSTEM
309	Q73GAO	NAVIGATION COMPUTER CP-1314	REPAIR COMPUTER
310	Q73GBO	LORAN RECEIVER R-1960/A	REPAIR RECEIVER
311	Q73GCO	KEYER CONTROL C-9474	REPAIR CONTROL
312	Q73GDO	SIGNAL DATA CONVERTER	REPAIR CONVERTER
313	Q73GEO	POWER SUPPLY PP-7428/A	REPAIR POW SUPPLY
314	Q73GFO	DIGITAL DISPLAY INDICATOR	REPAIR INDICATOR
315	Q73GHO	NAVIGATION COMPUTER SET CNTL	REPAIR CONTROL
316	Q73GHA	CIRCUIT CARD ASSEMBLY	REPAIR ASSEMBLY
317	Q73GNO	INERTIAL MEASURE UNIT BUFF	REPAIR BUFFER
318	Q73GPO	INERTIAL MEASURE UNIT	REPAIR UNIT
319	Q73GQO	NOT IN WUC MANUAL	REPAIR

TOTAL NUMBER OF PART REPAIR TASKS = 38

III 1 4 16 TSAR SHOP #16 -- FIRE CONTROL -

BEGINNING OF DAY SHIFT IS 0600. (CARD TYPE #18/1)
BREAK RATE MODIFIER = 100% (CARD TYPE #18/2)
PART ADMINISTRATIVE DELAY = 36 HOURS (CARD TYPE #47)

SHOP RESOURCE DATA (CARD TYPES #21 AND #22)

PERSONNEL DATA (MOB)

TSAR PERSONNEL TYPE	DAY SHIFT	NIGHT SHIFT	TOTAL	TARGETED	AFSC	DESCRIPTION
16	9	9	18	18	321X2Q	SQUADRON #1
46	9	9	18	16	321X2Q	SQUADRON #2
66	9	9	16	18	321X2Q	SQUADRON #3
79	16	15	31	31	321X2Q	WING
4 TYPES	43	42	77	77	TOTALS	

PERSONNEL DATA (REAR MAINTENANCE BASE)

TSAR PERSONNEL TYPE	DAY SHIFT	NIGHT SHIFT	TOTAL	TARGETED	AFSC	DESCRIPTION
16	2	2	4	4	321X2Q	SQUADRON #1
79	2	1	3	3	321X2Q	WING
2 TYPES	4	3	7	7	TOTALS	

SHOP TASK DATA (CARD TYPES #5, #7, #8, AND #10)

ON-EQUIPMENT TASKS

TSAR TASK #(NETWORK)	TASK PROB	TASK DESCRIPTION
987	.0417	LEAD COMPUTING SIGHT
995	.0018	74900
1004	.3704	FIRE CONTROL SYSTEM
1031	.0238	74C00
1041	.0076	MISSILE AUXILIARY GROUP
1047	.0018	74K00

TOTAL NUMBER OF ON-EQUIPMENT TASKS = 6
CUMULATIVE ON-EQUIPMENT PROBABILITY = .4471

RESOURCE REQUIREMENTS
AIRCRAFT, PART AND SUPPORT EQUIPMENT REPAIR DATA

PART REPAIR TASKS (CARD TYPE #8/1)

PART NO	WUC CODE	PART DESCRIPTION	TASK DESCRIPTION
320	Q74810	GYROSCOPE, LEAD COMPUTING	REPAIR GYROSCOPE
322	Q74840	OPTICAL DISPLAY UNIT SU-40	REPAIR UNIT
323	Q74910	NOT IN WUC MANUAL	REPAIR
325	Q7492C	"	
326	Q74BAO	POWER SUPPLY PP-4848	REPAIR POW SUPPLY
327	Q74BBO	CONTROL-OSCILLATOR (LRU-18)	REPAIR OSCILLATOR
328	Q74BCO	SYNCHRON, ELECT (LRU-17)	REPAIR SYNCHRONIZER
329	Q74BDO	COMPUTER, TARG INTER (LRU-1)	REPAIR COMPUTER
330	Q74BEO	POWER SUPPLY, (LRU-20)	REPAIR POW SUPPLY
332	Q74BGC	MODULATOR-OSCILLATOR (LRU-3)	REPAIR MOD-OSCILL
333	Q74BHO	AMPLIFIER, R-F (LRU-2)	REPAIR AMPLIFIER
335	Q74BKO	OSCILLATOR, R-F (LRU-21)	REPAIR OSCILLATOR
336	Q74BLC	STABILIZER ASSY (LRU-4)	REPAIR ASSEMBLIES
337	Q74BMO	CONTROL, ANTENNA (LRU-10)	REPAIR CONTROL
338	Q74BNC	INDIC, INTRA TARGET (LRU-12)	REPAIR INDICATOR
339	Q74BPO	WAVE-GUIDE ASSEMBLY CG-3365	REPAIR ASSEMBLY
340	Q74BOO	INDIC, INTRA TARGET (LRU-13)	REPAIR INDICATOR
342	Q74BTO	CONTROL-MONITOR (LRU-8)	REPAIR CONTROL-MON
343	Q74BUO	INDICATOR, CONTROL (LRU-11)	REPAIR INDICATOR
344	Q74BVO	ANTENNA AS-2072A (LRU-16)	REPAIR ANTENNA
345	Q74BWO	RACK, ELECT EQUIP (LRU-14)	REPAIR RACK
346	Q74BXO	CABLE, ASSY CX-10548(LRU-15)	REPAIR CABLE
347	Q74C20	NOT IN WUC MANUAL	REPAIR
350	Q74CCO	INDICATOR AZ, EL, & RNG	REPAIR INDICATOR
351	Q74FAO	TG-213/A TUNING DRIVE	REPAIR DRIVE
352	Q74KAO	NOT IN WUC MANUAL	REPAIR
353	Q74KAM	NOT IN WUC MANUAL	REPAIR

TOTAL NUMBER OF PART REPAIR TASKS = 27

III 1.4.17 TSAR SHOP #17 -- WEAPON CONTROL SHOP -

BEGINNING OF DAY SHIFT IS 0600. (CARD TYPE #18/1)
BREAK RATE MODIFIER = 100% (CARD TYPE #18/2)
PART ADMINISTRATIVE DELAY = 36 HOURS (CARD TYPE #47)

SHOP RESOURCE DATA (CARD TYPES #21 AND #22)

PERSONNEL DATA (MOB)

TSAR PERSONNEL TYPE	DAY SHIFT	NIGHT SHIFT	TOTAL	TARGETED	AFSC	DESCRIPTION
70	12	12	24	24	462WO	WING
1 TYPE	12	12	24	24	TOTALS	

PERSONNEL DATA (REAR MAINTENANCE BASE)

TSAR PERSONNEL TYPE	DAY SHIFT	NIGHT SHIFT	TOTAL	TARGETED	AFSC	DESCRIPTION
70	6	6	12	12	462WO	WING
1 TYPE	6	6	12	12	TOTALS	

SHOP TASK DATA (CARD TYPES #5, #7, #8, AND #10)

ON-EQUIPMENT TASKS

TSAR TASK #(NETWORK)	TASK PROB	TASK DESCRIPTION
1050	.0313	751XX
1051	.0455	75100
1064	.0250	75300
1081	.0083	TRIPLE EJECTION RACK
1099	.0102	MULTIPLE WEAPONS RELEASE SYS
1109	.0833	GUN PALLET INTERNAL

TOTAL NUMBER OF ON-EQUIPMENT TASKS = 6
CUMULATIVE ON-EQUIPMENT PROBABILITY = .2036

RESOURCE REQUIREMENTS
AIRCRAFT, PART AND SUPPORT EQUIPMENT REPAIR DATA

PART REPAIR TASKS (CARD TYPE #8/1)

PART NO	WUC CODE	PART DESCRIPTION	TASK DESCRIPTION
138	Q42150	MISC RELAY PANEL NO. 5	REPAIR PANEL
359	Q7519Q	NOT IN WUC MANUAL	REPAIR
361	Q7531C	SENSING SWITCH	REPAIR SWITCH
362	Q75320	TRIPLE EJECTION RACK	REPAIR RACK
363	Q75600	MISSILE FIRING CIRCUITS	REPAIR CIRCUITS
364	Q7561A	AUX ARMAMENT CONTROL PANEL	REPAIR PANEL
365	Q7561B	L-H SIDEWINDER MISSILE ASSY	REPAIR ASSEMBLY
366	Q7561C	R-H SIDEWINDER MISSILE ASSY	REPAIR ASSEMBLY
367	Q7561F	MISSILE FIRING RELAY PANEL	REPAIR PANEL
368	Q7561L	ARMAMENT RELAY PANEL ASSY	REPAIR ASSEMBLY
369	Q7591F	STATION SELECTOR SWITCH	REPAIR SWITCH
370	Q7591K	WIRE HARNESS, MULTIPLE WEAPON	REPAIR HARNESS
371	Q75930	INTERVALOMETER, P/N	REPAIR INTERVALOMETER
373	Q75E00	GUN, PALLETIZED INTERNAL	REPAIR GUN
374	Q75E1A	AMMUNITION DRUM	REPAIR DRUM
375	Q75E1C	EXIT UNIT	REPAIR UNIT
376	Q75E1D	UNLOADER UNIT	REPAIR UNIT
377	Q75E1E	FEEDER UNIT	REPAIR UNIT
380	Q75E1N	PURGE ASSEMBLY	REPAIR ASSEMBLY
381	Q75E1X	DRIVE ASSEMBLY	REPAIR ASSEMBLY
382	Q75E20	GUN, INTERNAL 20MM	REPAIR GUN
383	Q75E2C	CONTACT ASSEMBLY FIRING	REPAIR ASSEMBLY
384	Q75E2F	BARREL SET, GUN	REPAIR BARREL SET
385	Q75E2G	SOLENOID CLEARING	REPAIR SOLENOID

TOTAL NUMBER OF PART REPAIR TASKS = 24

III.1.4.18 TSAR SHOP #18 -- MACHINE SHOP -

BEGINNING OF DAY SHIFT IS 0600. (CARD TYPE #18/1)
BREAK RATE MODIFIER = 100% (CARD TYPE #18/2)
PART ADMINISTRATIVE DELAY = 36 HOURS (CARD TYPE #47)

SHOP RESOURCE DATA (CARD TYPES #21 AND #22)

PERSONNEL DATA (MOB)

TSAR PERSONNEL TYPE	DAY SHIFT	NIGHT SHIFT	TOTAL	TARGETED	AFSC	DESCRIPTION
18	4	3	7	7	427XO	SQUADRON #1
1 TYPES	4	3	7	7	TOTALS	

PERSONNEL DATA (REAR MAINTENANCE BASE)

TSAR PERSONNEL TYPE	DAY SHIFT	NIGHT SHIFT	TOTAL	TARGETED	AFSC	DESCRIPTION
18	2	2	4	4	427XO	SQUADRON #1
1 TYPE	2	2	4	4	TOTALS	

III.1.4.19 TSAR SHOP #19 -- WELDING SHOP -

BEGINNING OF DAY SHIFT IS 0600. (CARD TYPE #18/1)
BREAK RATE MODIFIER = 100% (CARD TYPE #18/2)
PART ADMINISTRATIVE DELAY = 36 HOURS (CARD TYPE #47)

SHOP RESOURCE DATA (CARD TYPES #21 AND #22)

PERSONNEL DATA (MOB)

TSAR PERSONNEL TYPE	DAY SHIFT	NIGHT SHIFT	TOTAL	TARGETED	AFSC	DESCRIPTION
19	4	3	7	7	427X4	SQUADRON #1
1 TYPE	4	3	7	7	TOTALS	

PERSONNEL DATA (REAR MAINTENANCE BASE)

TSAR PERSONNEL TYPE	DAY SHIFT	NIGHT SHIFT	TOTAL	TARGETED	AFSC	DESCRIPTION
19	2	2	4	4	427X4	SQUADRON #1
1 TYPE	2	2	4	4	TOTALS	

III.1.4.20 TSAR SHOP #20 -- CAMERA SHOP -

BEGINNING OF DAY SHIFT IS 0600. (CARD TYPE #18/1)
BREAK RATE MODIFIER = 100% (CARD TYPE #18/2)
PART ADMINISTRATIVE DELAY = 36 HOURS (CARD TYPE #47)

SHOP RESOURCE DATA (CARD TYPES #21 AND #22)

PERSONNEL DATA (MOB)

TSAR PERSONNEL TYPE	DAY SHIFT	NIGHT SHIFT	TOTAL	TARGETED	AFSC	DESCRIPTION
20	4	3	7	7	404X1	SQUADRON #1
192	60	60	120	80		
197	60	60	120	80		
3 TYPES	124	123	247	167	TOTALS	

PERSONNEL DATA (REAR MAINTENANCE BASE)

TSAR PERSONNEL TYPE	DAY SHIFT	NIGHT SHIFT	TOTAL	TARGETED	AFSC	DESCRIPTION
20	2	0	2	2	404X1	SQUADRON #1
1 TYPE	2	0	2	2	TOTALS	

SHOP TASK DATA (CARD TYPES #5, #7, #8, AND #10)

ON-EQUIPMENT TASKS

TSAR TASK #(NETWORK)	TASK PROB	TASK DESCRIPTION
1190	.0076	DIRECT RADAR SCOPE RECORDING SYS
1194	.0123	COMBAT DOCUMENTATION SYSTEM
1200	.0556	77XXX

TOTAL NUMBER OF ON-EQUIPMENT TASKS = 3
CUMULATIVE ON-EQUIPMENT PROBABILITY = .0755

RESOURCE REQUIREMENTS
AIRCRAFT, PART AND SUPPORT EQUIPMENT REPAIR DATA

PART REPAIR TASKS (CARD TYPE #8/1)

PART NO	WUC CODE	PART DESCRIPTION	TASK DESCRIPTION
224	Q552BO	NOT IN WUC MANUAL	REPAIR
225	Q552CO	"	
409	Q77J1O	EXPOSURE FREQUENCY CONTROL	REPAIR CONTROL
410	Q77J2A	PERISCOPE, DRS, LD-70A	REPAIR PERISCOPE
411	Q77J2K	KD-42A CAMERA	REPAIR CAMERA
412	Q77X6O	KB-25A CAMERA	REPAIR CAMERA

TOTAL NUMBER OF PART REPAIR TASKS = 6

III.1.4.21 TSAR SHOP #21 -- HEAVY REPAIR SHOP -

BEGINNING OF DAY SHIFT IS 0600. (CARD TYPE #18/1)
BREAK RATE MODIFIER = 100% (CARD TYPE #18/2)
PART ADMINISTRATIVE DELAY = 36 HOURS (CARD TYPE #47)

SHOP RESOURCE DATA (CARD TYPES #21 AND #22)

PERSONNEL DATA (MOB)

TSAR PERSONNEL TYPE	DAY SHIFT	NIGHT SHIFT	TOTAL	TARGETED	AFSC	DESCRIPTION
21	18	10	28	28	431X1C	SQUADRON #3
1 TYPE	18	10	28	26	TOTALS	

PERSONNEL DATA (REAR MAINTENANCE BASE)

TSAR PERSONNEL TYPE	DAY SHIFT	NIGHT SHIFT	TOTAL	TARGETED	AFSC	DESCRIPTION
21	4	4	8	8	431X1C	SQUADRON #3
1 TYPE	4	4	8	8	TOTALS	

SHOP TASK DATA (CARD TYPES #5, #7, #8, AND #10)

ON-EQUIPMENT TASKS

TSAR TASK #(NETWORK)	TASK PROB	TASK DESCRIPTION
66	.0096	AIR INDUCTION SYSTEM
120	.0213	CANOPY SYSTEMS
209	.0167	NOSE LANDING GEAR
277	.0046	CONTROL STICK MECHANISM
293	.0200	LATERAL CONTROL SYSTEM
319	.0303	STABILITOR SYSTEM
346	.0060	RUDDER SYSTEM
413	.0192	LEAD EDGE SLAT SYSTEM
1204	.0023	DRAG CHUTE CONTROL SYSTEM

TOTAL NUMBER OF ON-EQUIPMENT TASKS = 9
CUMULATIVE ON-EQUIPMENT PROBABILITY = .1300

III.1.4.22 TSAR SHOP #22 -- MISSILE MAINTENANCE -

BEGINNING OF DAY SHIFT IS 0600. (CARD TYPE #18/1)
BREAK RATE MODIFIER = 100% (CARD TYPE #18/2)
PART ADMINISTRATIVE DELAY = 36 HOURS (CARD TYPE #47)

SHOP RESOURCE DATA (CARD TYPES #21 AND #22)

PERSONNEL DATA (MOS)

TSAR PERSONNEL TYPE	DAY SHIFT	NIGHT SHIFT	TOTAL	TARGETED	AFSC	DESCRIPTION
99	32	32	64	64		
1 TYPE	32	32	64	64	TOTALS	

SHOP TASK DATA (CARD TYPES #5, #7, #8, AND #10)

EQUIPMENT REPAIR TASKS

TSAR AGE #	PROB	AGE DESCRIPTION	TASK DESCRIPTION
2	.0010	OIL CART	REPAIR OIL CART
3	.0010	HYDRAULIC CART	REPAIR CART
4	.0010	TOW BAR	REPAIR TOW BAR
41	.0010	LOX CART	REPAIR LOX CART
42	.0010	NITROGEN BOTTLE	REPAIR BOTTLE
43	.0010	B-1 STAND	REPAIR B-1 STAND
44	.0010	B-4 STAND	REPAIR B-4 STAND
45	.0010	C-1 STAND	REPAIR C-1 STAND
46	.0000	GUN LOADER	REPAIR LOADER
47	.0100	NE-2 LIGHT	REPAIR NE-2 LIGHT
48	.2000	H-1 HEAVY	REPAIR H-1 HEAVY
49	.0100	ANAWA-6	REPAIR ANAWA-6
50	.0500	MC-2A LIGHT	REPAIR MC-2A LIGHT
51	.0500	MC-1A HEAVY	REPAIR MC-1A HEAVY
52	.0010	15 TON JACK	REPAIR JACK
53	.0010	20 TON JACK	REPAIR JACK
54	.0010	370 GAL TANK	REPAIR TANK
55	.0010	600 GAL TANK	REPAIR TANK
56	.0010	TTU-228	REPAIR TTU-228
57	.0010	AFM32T	REPAIR AFM32T
58	.0010	AM24T-8	REPAIR AM24T-8
59	.0001	AM32C-1	REPAIR AM32C-1
60	.1100	AM32A-6	REPAIR AM32A-6
65	.1000	MJ1-A B	REPAIR MJ1-A B
66	.1000	MHU-83	REPAIR MHU-83
76	1.0000	MHU-12M	REPAIR MHU-12M
77	1.0000	MHU-141	REPAIR MHU-141
78	1.0000	MHU-110	REPAIR MHU-110

RESOURCE REQUIREMENTS
AIRCRAFT, PART AND SUPPORT EQUIPMENT REPAIR DATA

EQUIPMENT REPAIR TASKS (CONTINUED)

TSAR AGE #	PROB	AGE DESCRIPTION	TASK DESCRIPTION
80	0800	FUEL TRUCK	REPAIR FUEL TRUCK
91	0200	ORACLE	REPAIR ORACLE
92	0400	CATERPILLAR	REPAIR CATERPILLAR
93	0100	4 YD	REPAIR 4 YD
94	0100	2.5 YD	REPAIR 2.5 YD
95	0050	DUMP TRUCK	REPAIR DUMP TRUCK
96	0100	EOD M-1	REPAIR EOD M-1
97	0020	PICKUP	REPAIR PICKUP
98	0100	MISC RR	REPAIR MISC RR
99	0100	FIRE TRUCK	REPAIR FIRE TRUCK

TOTAL NUMBER OF EQUIPMENT REPAIR TASKS = 38

III.1.4.23 TSAR SHOP #23 -- FUEL SYSTEMS SHOP -

BEGINNING OF DAY SHIFT IS 0600. (CARD TYPE #18/1)
BREAK RATE MODIFIER = 100% (CARD TYPE #18/2)
PART ADMINISTRATIVE DELAY = 36 HOURS (CARD TYPE #47)

SHOP RESOURCE DATA (CARD TYPES #21 AND #22)

PERSONNEL DATA (MOB)

TSAR PERSONNEL TYPE	DAY SHIFT	NIGHT SHIFT	TOTAL	TARGETED	AFSC	DESCRIPTION
23.	14	9	23	23	423X3	WING
1 TYPE	14	9	23	23	TOTALS	

PERSONNEL DATA (REAR MAINTENANCE BASE)

TSAR PERSONNEL TYPE	DAY SHIFT	NIGHT SHIFT	TOTAL	TARGETED	AFSC	DESCRIPTION
23	2	2	4	4	423X3	WING
1 TYPE	2	2	4	4	TOTALS	

SHOP TASK DATA (CARD TYPES #5, #7, #8, AND #10)

ON-EQUIPMENT TASKS

TSAR TASK #(NETWORK)	TASK PROB	TASK DESCRIPTION
50	.0901	WINGS
597	.0156	INTERNAL FUEL SYSTEM
626	.0041	AIR REFUELING SYSTEM

TOTAL NUMBER OF ON-EQUIPMENT TASKS = 3
CUMULATIVE ON-EQUIPMENT PROBABILITY = .1098

III.1.4.24 TSAR SHOP #24 -- PARACHUTE SHOP -

BEGINNING OF DAY SHIFT IS 0600. (CARD TYPE #18/1)
BREAK RATE MODIFIER = 100% (CARD TYPE #18/2)
PART ADMINISTRATIVE DELAY = 36 HOURS (CARD TYPE #47)

SHOP RESOURCE DATA (CARD TYPES #21 AND #22)

PERSONNEL DATA (MOB)

TSAR PERSONNEL TYPE	DAY SHIFT	NIGHT SHIFT	TOTAL	TARGETED	AFSC	DESCRIPTION
25	3	2	5	5	531X5	WING
26	7	4	11	11	531X4	WING
2 TYPES	10	6	16	16	TOTALS	

PERSONNEL DATA (REAR MAINTENANCE BASE)

TSAR PERSONNEL TYPE	DAY SHIFT	NIGHT SHIFT	TOTAL	TARGETED	AFSC	DESCRIPTION
24	2	2	4	4	582X1	WING
25	2	2	4	4	531X5	WING
26	2	2	4	4	531X4	WING
3 TYPES	6	6	12	12	TOTALS	

III 1 4.25 TSAR SHOP #28 -- AIRCRAFT CONFIGURATION -

BEGINNING OF DAY SHIFT IS 0400. (CARD TYPE #18/1)
BREAK RATE MODIFIER = 100% (CARD TYPE #18/2)
PART ADMINISTRATIVE DELAY = 36 HOURS (CARD TYPE #47)

SHOP RESOURCE DATA (CARD TYPES #21 AND #22)

PERSONNEL DATA (MOB)

TSAR PERSONNEL TYPE	DAY SHIFT	NIGHT SHIFT	TOTAL	TARGETED	AFSC	DESCRIPTION
27	36	25	61	61	462GO	WING
28	160	50	210	96	462LO	WING
29	6	4	10	10	322X2	WING
3 TYPES	202	79	281	167	TOTALS	

PERSONNEL DATA (REAR MAINTENANCE BASE)

TSAR PERSONNEL TYPE	DAY SHIFT	NIGHT SHIFT	TOTAL	TARGETED	AFSC	DESCRIPTION
27	4	4	8	8	462GO	WING
28	6	6	12	12	462LO	WING
29	2	2	4	4	322X2	WING
3 TYPES	12	12	24	24	TOTALS	

III 1.4.26 TSAR SHOP #30 -- MUNITIONS MAINTENANCE/CIVIL ENGINEERING -

BEGINNING OF DAY SHIFT IS 0400. (CARD TYPE #18/1)
BREAK RATE MODIFIER = 100% (CARD TYPE #18/2)
PART ADMINISTRATIVE DELAY = 36 HOURS (CARD TYPE #47)

SHOP RESOURCE DATA (CARD TYPES #21 AND #22)

PERSONNEL DATA (MOB)

TSAR PERSONNEL TYPE	DAY SHIFT	NIGHT SHIFT	TOTAL	TARGETED	AFSC	DESCRIPTION
22	12	12	24	24	316X1L	WING
30	75	37	112	96	461X0	WING
191	4	4	8	8		CE/RRR
193	6	6	12	12		CE/RRR
194	36	36	72	72		CE/RRR
195	12	12	24	24		CE/RRR
196	12	12	24	24		CE/RRR
200	0	0	0	0		CE/RRR
8 TYPES	157	119	276	260	TOTALS	

PERSONNEL DATA (REAR MAINTENANCE BASE)

TSAR PERSONNEL TYPE	DAY SHIFT	NIGHT SHIFT	TOTAL	TARGETED	AFSC	DESCRIPTION
22	12	12	24	24	316X1L	WING
30	75	37	112	96	461X0	WING
2 TYPES	87	49	136	120	TOTALS	

AGE DATA (MOB)

TSAR AGE TYPE	NUMBER	TARGETED	DESCRIPTION
91	3	3	ORACLE
92	6	6	CATERPILLAR
93	4	4	4 YD
94	4	4	2.5 YD
95	15	15	DUMP TRUCK
96	4	4	EOD M-1
97	40	40	PICKUP
98	60	60	MISC RRR
99	5	5	FIRE TRUCK
3 TYPES	141	141	TOTALS

RESOURCE REQUIREMENTS
AIRCRAFT, PART AND SUPPORT EQUIPMENT REPAIR DATA

AGE DATA (REAR MAINTENANCE BASE)

TSAR AGE TYPE	NUMBER	TARGETED	DESCRIPTION
91	3	3	ORACLE
92	6	6	CATERPILLAR
93	4	4	4 YD
94	4	4	2.5 YD
95	15	15	DUMP TRUCK
96	4	4	EOD M-1
97	40	40	PICKUP
98	60	60	MISC RRR
99	5	5	FIRE TRUCK
3 TYPES	141	141	TOTALS

III.1.5 TASK NETWORK DATA

THE FOLLOWING PLOTS GRAPHICALLY REPRESENT EACH ON-EQUIPMENT TASK TASK NETWORK. NEGATIVE PROBABLITIES IN A SUBTASK REPRESENT "MUTUALLY EXCLUSIVE" SUBTASKS, WHEREAS POSITIVE PROBABILITIES REPRESENT "PARALLEL" SUBTASKS. SINGLE TASK NETWORKS WILL NOT HAVE ASSOCIATED GRAPHIC PLOTS.

III.1.5.1 TASK #1 NETWORK - QTIRE -- TIRES -

		PERSONNEL				AGE		PART		
		TEAM 1		TEAM 2						
SUBTASK	PROB	TYP	#	TYP	#	#1	#2	NO.	TIME	DIS
2	-.334	1	2	--	--	52	--	--	12	0
3	-.333	1	1	--	--	52	--	681	282	0
4	-.333	1	1	--	--	52	--	682	282	0
5	1.000	1	1	--	--	52	--	1	54	0

TOTAL NUMBER OF SUBTASKS = 4

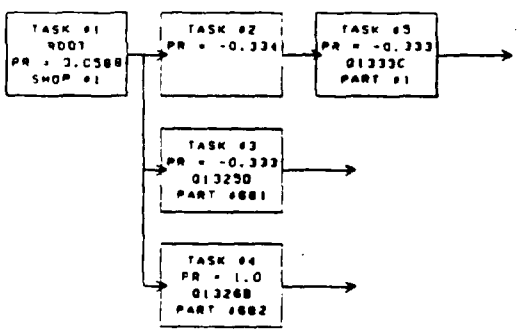

FIGURE 2

III 1.5.2 TASK #6 NETWORK - 11100 -- FUSELAGE -

		PERSONNEL								
		TEAM 1		TEAM 2		AGE		PART		
SUBTASK	PROB	TYP	#	TYP	#	#1	#2	NO.	TIME	DIS
7	.039	2	1	--	--	--	--	--	18	0
8	.850	16	2	--	--	--	--	--	72	0
9	.353	1	1	--	--	--	--	--	108	0
10	-.200	16	1	--	--	45	--	--	18	0
11	-.670	2	1	--	--	45	--	--	198	0
12	-.130	1	1	--	--	43	--	--	66	0
13	-.027	2	1	--	--	43	--	--	132	0
14	-.009	21	2	--	--	--	--	--	540	0
15	-.714	1	2	--	--	--	--	--	126	0
16	1.000	--	--	--	--	--	--	--	--	0
17	-.049	--	--	--	--	--	--	2	--	0
18	.010	--	--	--	--	--	--	3	--	0
19	-.003	--	--	--	--	--	--	4	--	0
20	-.021	--	--	--	--	--	--	5	--	0
21	-.014	--	--	--	--	--	--	6	--	0
22	.020	--	--	--	--	--	--	7	--	0
23	-.009	--	--	--	--	--	--	8	--	0
24	-.010	--	--	--	--	--	--	9	--	0
25	-.003	--	--	--	--	--	--	10	--	0
26	-.003	--	--	--	--	--	--	11	--	0
27	-.007	--	--	--	--	--	--	12	--	0
28	-.007	--	--	--	--	--	--	13	--	0
29	-.014	--	--	--	--	--	--	14	--	0
30	-.007	--	--	--	--	--	--	15	--	0
31	-.007	--	--	--	--	--	--	16	--	0
32	-.014	--	--	--	--	--	--	17	--	0
33	-.007	--	--	--	--	--	--	18	--	0
34	-.048	--	--	--	--	--	--	19	--	0
35	-.070	--	--	--	--	--	--	20	--	0
36	-.034	--	--	--	--	--	--	21	--	0
37	-.028	--	--	--	--	--	--	22	--	0
38	-.088	--	--	--	--	--	--	23	--	0
39	.010	--	--	--	--	--	--	24	--	0
40	.010	--	--	--	--	--	--	25	--	0
41	.010	--	--	--	--	--	--	26	--	0
42	-.003	--	--	--	--	--	--	27	--	0
43	-.042	--	--	--	--	--	--	28	--	0
44	.010	--	--	--	--	--	--	29	--	0
45	-.007	--	--	--	--	--	--	30	--	0
46	-.010	2	1	--	--	--	--	31	--	0
47	-.003	--	--	--	--	--	--	32	--	0
48	-.042	--	--	--	--	--	--	33	--	0
49	-.014	--	--	--	--	--	--	34	--	0

TOTAL NUMBER OF SUBTASKS = 42

RESOURCE REQUIREMENTS
AIRCRAFT, PART AND SUPPORT EQUIPMENT REPAIR DATA

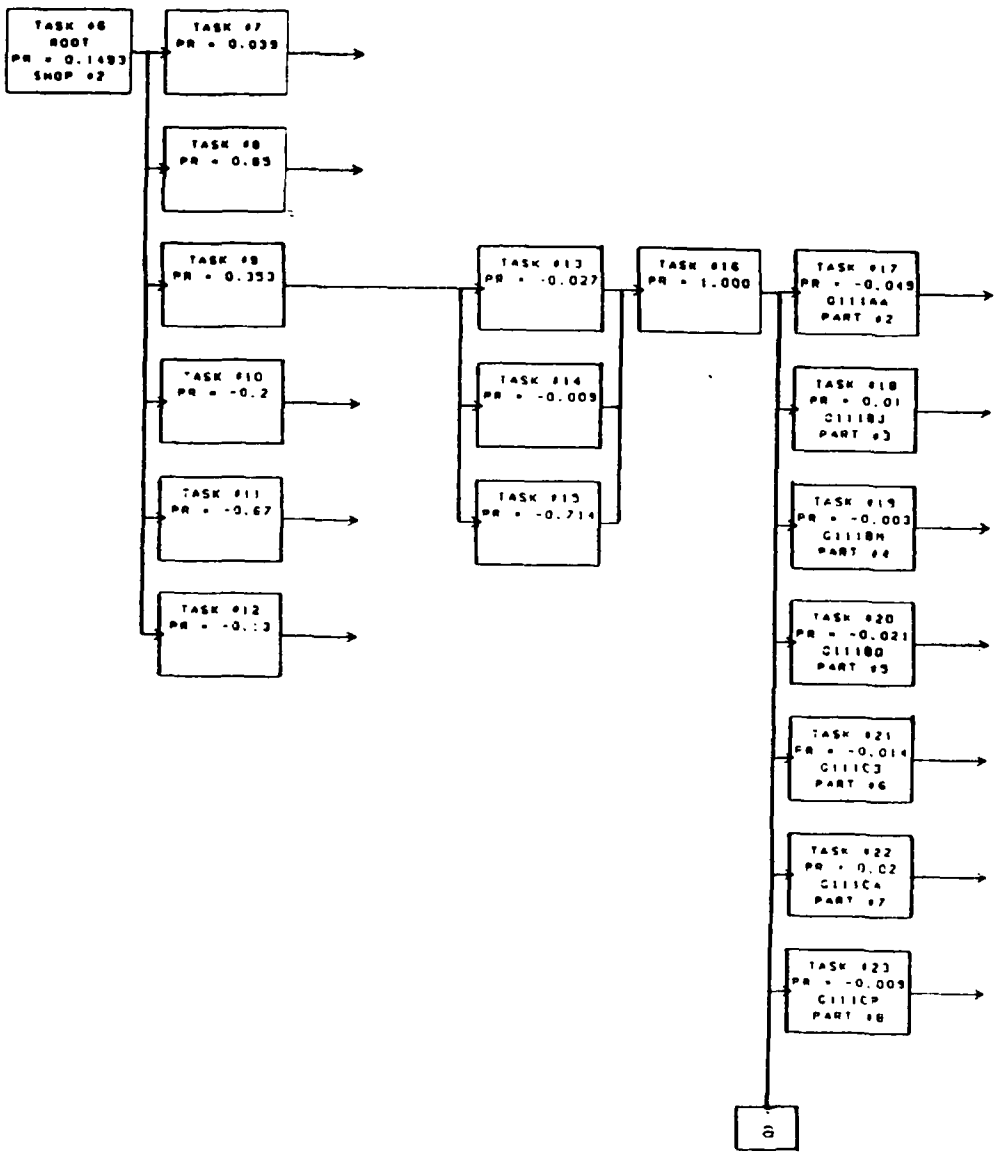

FIGURE 3a

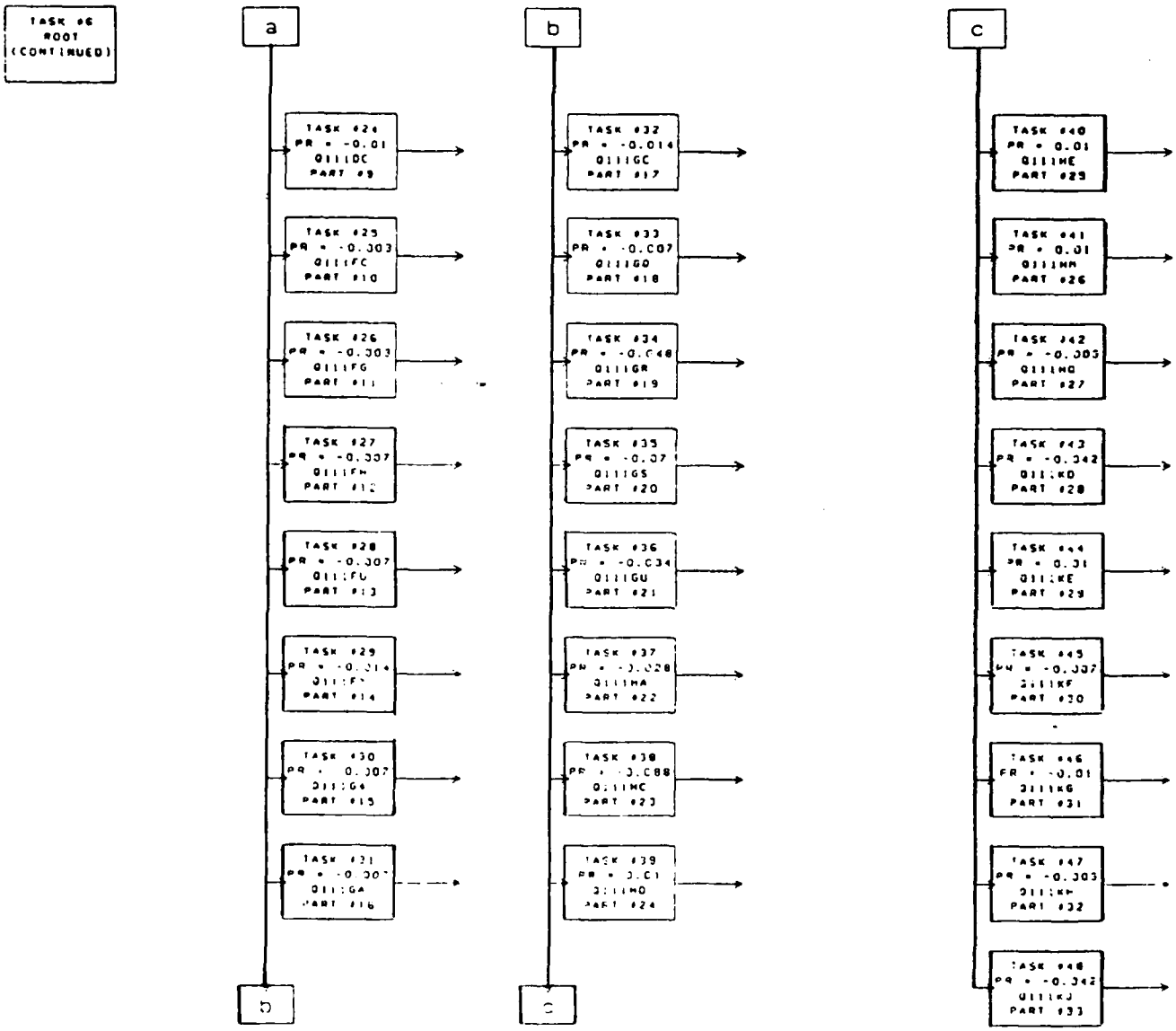
TASK #6
ROOT
(CONTINUED)
a
b
c
TASK #24
PR = -0.01
0111DC
PART #9
TASK #25
PR = -0.303
0111FC
PART #10
TASK #26
PR = -0.303
0111FG
TASK #27
PR = -0.307
0111FH
TASK #28
PR = -0.307
0111FU
PART #13
TASK #29
PART #14
TASK #30
PART #15
TASK #31
PART #16
TASK #32
PR = -0.014
0111GC
PART #17
TASK #33
PR = -0.007
0111GO
PART #18
TASK #34
PART #19
TASK #35
0111GS
PART #20
TASK #36
0111GU
PART #21
TASK #37
0111HA
PART #22
TASK #38
0111HC
PART #23
TASK #39
0111HO
PART #24
TASK #40
PR = 0.01
0111HE
PART #25
TASK #41
PR = 0.01
0111HM
PART #26
TASK #42
PR = -0.303
0111HO
PART #27
TASK #43
PR = -0.342
0111KD
PART #28
TASK #44
PR = 0.31
0111KE
PART #29
TASK #45
0111KF
PART #30
TASK #46
PART #31
TASK #47
PART #32
TASK #48
PR = -0.342
0111KJ
PART #33

FIGURE 3b

III.1.5.3 TASK #50 NETWORK - 11200 -- WINGS -

		PERSONNEL								
		TEAM 1		TEAM 2		AGE		PART		
SUBTASK	PROB	TYP	#	TYP	#	#1	#2	NO.	TIME	DIS
51	.010	23	2	--	--	--	--	--	24	0
52	.008	2	1	--	--	45	--	--	18	0
53	.031	23	2	--	--	--	--	--	24	0
54	.013	8	1	--	--	--	--	--	102	0
55	.128	1	1	--	--	45	--	--	150	0
56	-.612	23	2	--	--	45	--	--	96	0
57	-.301	2	1	--	--	--	--	--	132	0
58	-.082	1	1	--	--	--	--	--	138	0
59	-.015	23	2	--	--	--	--	--	108	0
60	-.088	1	1	--	--	--	--	--	132	0
61	1.000	--	--	--	--	--	--	--	--	0
62	-.070	--	--	--	--	--	--	35	--	0
63	.125	--	--	--	--	--	--	36	--	0
64	.042	--	--	--	--	--	--	37	--	0
65	-.490	--	--	--	--	--	--	38	--	0

TOTAL NUMBER OF SUBTASKS = 15

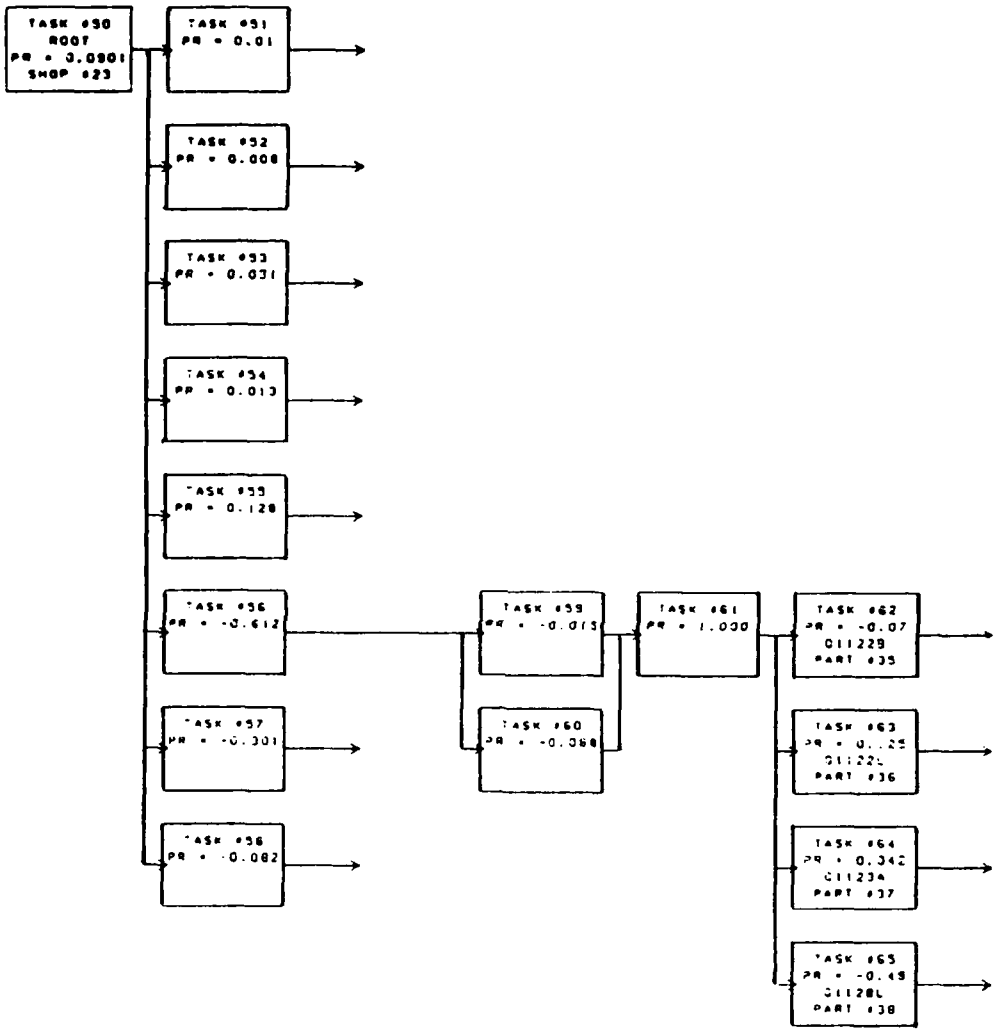
TASK #50
ROOT
PR = 0.0901
SHOP #23
TASK #51
PR = 0.01
TASK #52
PR = 0.008
TASK #53
PR = 0.031
TASK #54
PR = 0.013
TASK #55
PR = 0.128
TASK #56
PR = -0.612
TASK #57
PR = -0.301
TASK #58
PR = -0.082
TASK #59
PR = -0.013
TASK #60
PR = -0.068
TASK #61
PR = 1.000
TASK #62
PR = -0.07
011229
PART #35
TASK #63
PART #36
TASK #64
PR = 0.342
011234
PART #37
TASK #65
PR = -0.49
011281
PART #38

FIGURE 4

III.1.5.4 TASK #66 NETWORK - 11300 -- AIR INDUCTION SYSTEMS -

		PERSONNEL								
		TEAM 1		TEAM 2		AGE		PART		
SUBTASK	PROB	TYP	#	TYP	#	#1	#2	NO.	TIME	DIS
67	.103	9	2	--	--	--	--	--	78	0
68	.034	3	2	--	--	--	--	--	60	0
69	.086	6	2	--	--	--	--	--	60	0
70	.052	21	2	--	--	--	--	--	102	0
71	.086	9	2	--	--	--	--	--	90	0
72	.086	3	2	--	--	--	--	--	42	0
73	.034	6	2	--	--	--	--	--	60	0
74	.052	21	2	--	--	--	--	--	180	0
75	.017	3	2	--	--	--	--	--	132	0
76	.138	6	1	--	--	--	--	--	186	0
77	.138	21	2	--	--	--	--	--	300	0
78	.103	1	1	--	--	--	--	--	132	0
79	-.320	9	2	--	--	45	--	--	21	0
80	-.118	21	2	--	--	45	--	--	150	0
81	-.137	3	2	--	--	45	--	--	84	0
82	-.118	6	1	--	--	--	--	--	78	0
83	-.216	2	1	--	--	--	--	--	162	0
84	-.078	1	1	--	--	--	--	--	60	0
85	-.118	9	1	--	--	--	--	--	132	0
86	-.058	3	2	--	--	--	--	--	114	0
87	-.529	6	2	--	--	--	--	--	168	0
88	-.118	1	1	--	--	--	--	--	216	0
89	.938	--	--	--	--	--	--	--	--	0
90	-.200	6	2	--	--	--	--	39	--	0
91	.250	--	--	--	--	--	--	40	--	0
92	-.050	--	--	--	--	--	--	41	--	0
93	-.300	--	--	--	--	--	--	42	--	0
94	-.150	--	--	--	--	--	--	43	--	0

TOTAL NUMBER OF SUBTASKS = 28

RESOURCE REQUIREMENTS
AIRCRAFT, PART AND SUPPORT EQUIPMENT REPAIR DATA

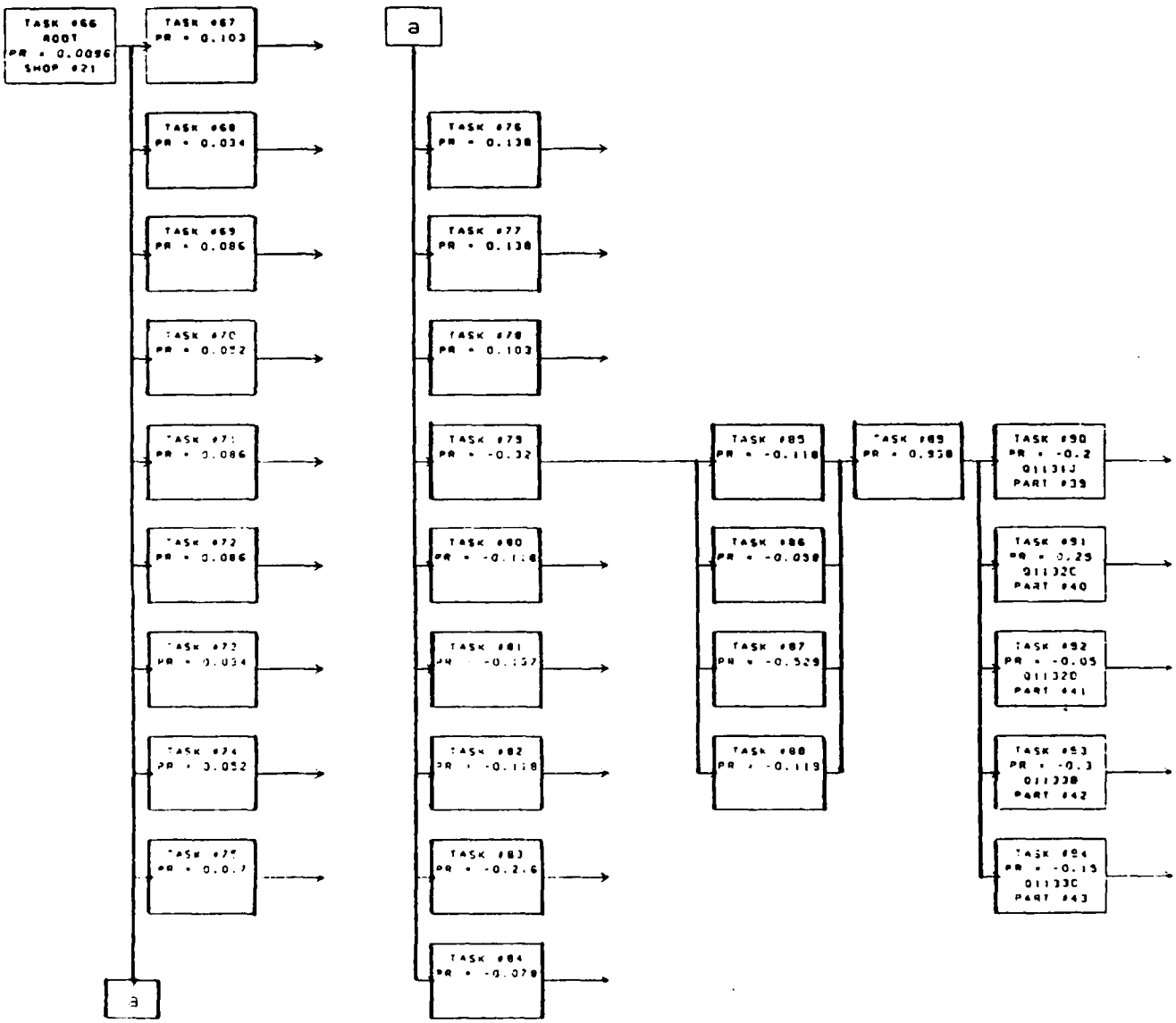

FIGURE 5

III.1.5.5 TASK #95 NETWORK - 12100 -- COCKPITS -

SUBTASK	PROB	PERSONNEL TEAM 1 TYP	TEAM 1 #	TEAM 2 TYP	TEAM 2 #	AGE #1	AGE #2	PART NO.	TIME	DIS
96	.015	9	1	--	--	--	--	--	24	0
97	.015	1	1	--	--	--	--	--	12	0
98	.470	8	1	--	--	--	--	--	78	0
99	.045	9	1	--	--	--	--	--	354	0
100	.076	1	1	--	--	--	--	--	102	0
101	-.735	1	1	--	--	--	--	--	78	0
102	-.033	9	1	--	--	--	--	--	84	0
103	-.232	2	1	--	--	--	--	--	132	0
104	.016	--	--	--	--	--	--	44	--	0
105	.146	--	--	--	--	--	--	45	--	0
106	.016	--	--	--	--	--	--	46	--	0
107	.049	--	--	--	--	--	--	47	--	0

TOTAL NUMBER OF SUBTASKS = 12

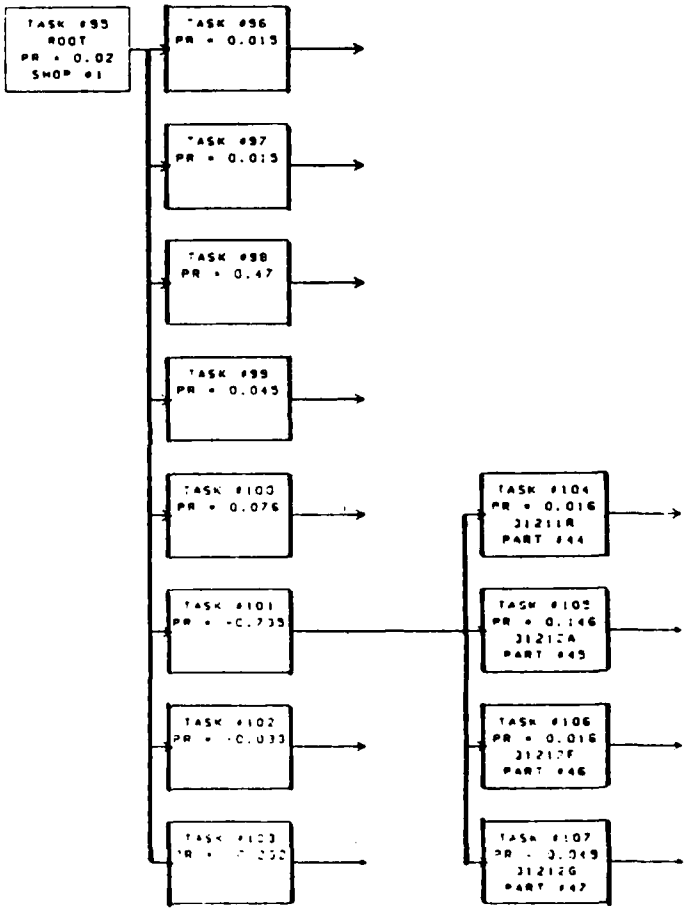

FIGURE 6

TABLE 6 TASK #108 NETWORK - 12200 -- EJECTION SEATS -

SUBTASK	PROB	PERSONNEL TEAM 1 TYP	TEAM 1 #	TEAM 2 TYP	TEAM 2 #	AGE #1	AGE #2	PART NO	TIME	DIS
109	.548	75	2	--	--	--	--	--	12	0
110	.019	3	1	--	--	--	--	--	18	0
111	.058	75	2	--	--	--	--	--	30	0
112	.013	3	1	--	--	--	--	--	30	0
113	.742	75	2	--	--	--	--	--	138	0
114	1.000	75	2	--	--	--	--	--	33	0
115	-.470	75	2	--	--	43	--	--	78	0
116	-.026	3	1	--	--	--	--	--	96	0
117	1.000	--	--	--	--	--	--	--	--	0
118	.003	75	2	--	--	--	--	48	--	0

TOTAL NUMBER OF SUBTASKS = 10

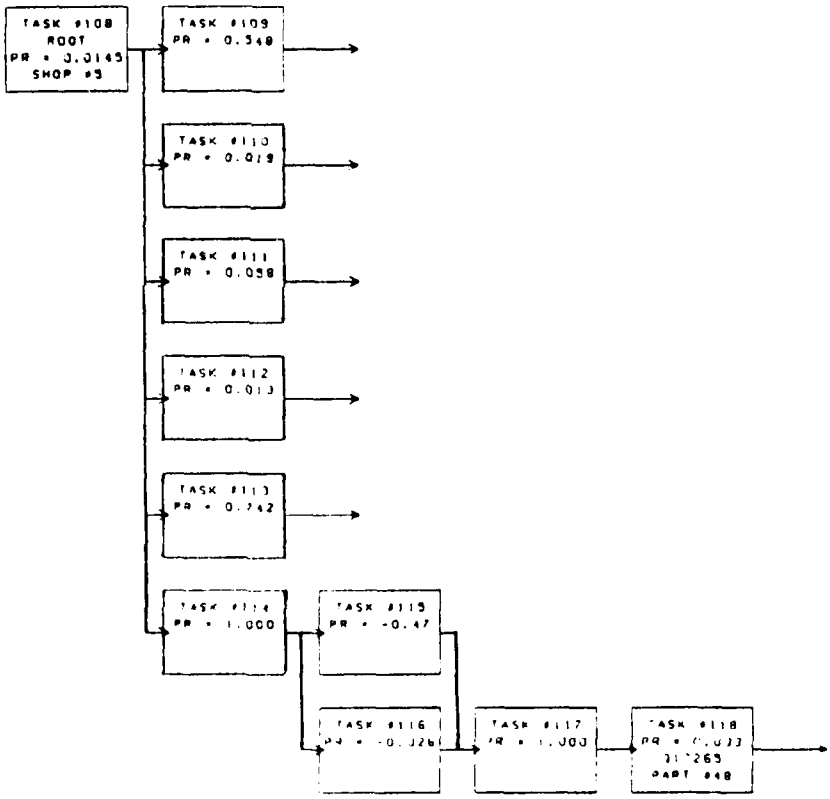

FIGURE 7

III.1.5.7 SIMPLE TASK #119 - 12265 -- CANOPY SYSTEM -

SUBTASK	PROB	PERSONNEL TEAM 1 TYP	TEAM 1 #	TEAM 2 TYP	TEAM 2 #	AGE #1	AGE #2	PART NO.	TIME	DIS
119	.144	75	2	--	--	--	--	--	138	0

** THIS IS A SIMPLE TASK, THEREFORE NO NETWORK WILL FOLLOW

III.1.5.8 TASK #120 NETWORK - 12300 -- CANOPY SYSTEMS -

SUBTASK	PROB	PERSONNEL TEAM 1 TYP	TEAM 1 #	TEAM 2 TYP	TEAM 2 #	AGE #1	AGE #2	PART NO.	TIME	DIS
121	.059	75	2	--	--	--	--	--	60	0
122	.090	4	2	--	--	--	--	--	30	0
123	.086	6	2	--	--	--	--	--	48	0
124	.032	21	2	--	--	--	--	--	84	0
125	.027	75	2	--	--	--	--	--	60	0
126	.050	4	2	--	--	--	--	--	30	0
127	.063	21	2	--	--	--	--	--	240	0
128	.459	75	2	--	--	57	--	--	108	0
129	.018	4	2	--	--	--	--	--	108	0
130	.063	6	1	--	--	--	--	--	108	0
131	.059	21	2	--	--	--	--	--	600	0
132	-.528	75	2	--	--	--	--	--	6	0
133	-.103	4	1	--	--	51	--	--	72	0
134	-.291	21	2	--	--	--	--	--	519	0
135	-.042	6	1	--	--	51	--	--	90	0
136	-.036	2	1	--	--	51	--	--	252	0
137	-.412	75	2	--	--	--	--	--	138	0
138	-.254	4	1	--	--	51	--	--	96	0
139	-.032	6	1	--	--	--	--	--	78	0
140	-.222	21	2	--	--	--	--	--	1080	0
141	.860	--	--	--	--	--	--	--	--	0
142	-.018	--	--	--	--	--	--	49	--	0
143	-.027	--	--	--	--	--	--	50	--	0
144	-.159	75	2	--	--	--	--	51	--	0
145	-.105	--	--	--	--	--	--	52	--	0
146	-.018	--	--	--	--	--	--	53	--	0
147	-.054	--	--	--	--	--	--	54	--	0
148	-.027	--	--	--	--	--	--	55	--	0
149	-.062	--	--	--	--	--	--	56	--	0
150	-.176	--	--	--	--	--	--	57	--	0
151	-.018	--	--	--	--	--	--	58	--	0
152	-.009	--	--	--	--	--	--	59	--	0

TOTAL NUMBER OF SUBTASKS = 32

RESOURCE REQUIREMENTS
AIRCRAFT, PART AND SUPPORT EQUIPMENT REPAIR DATA

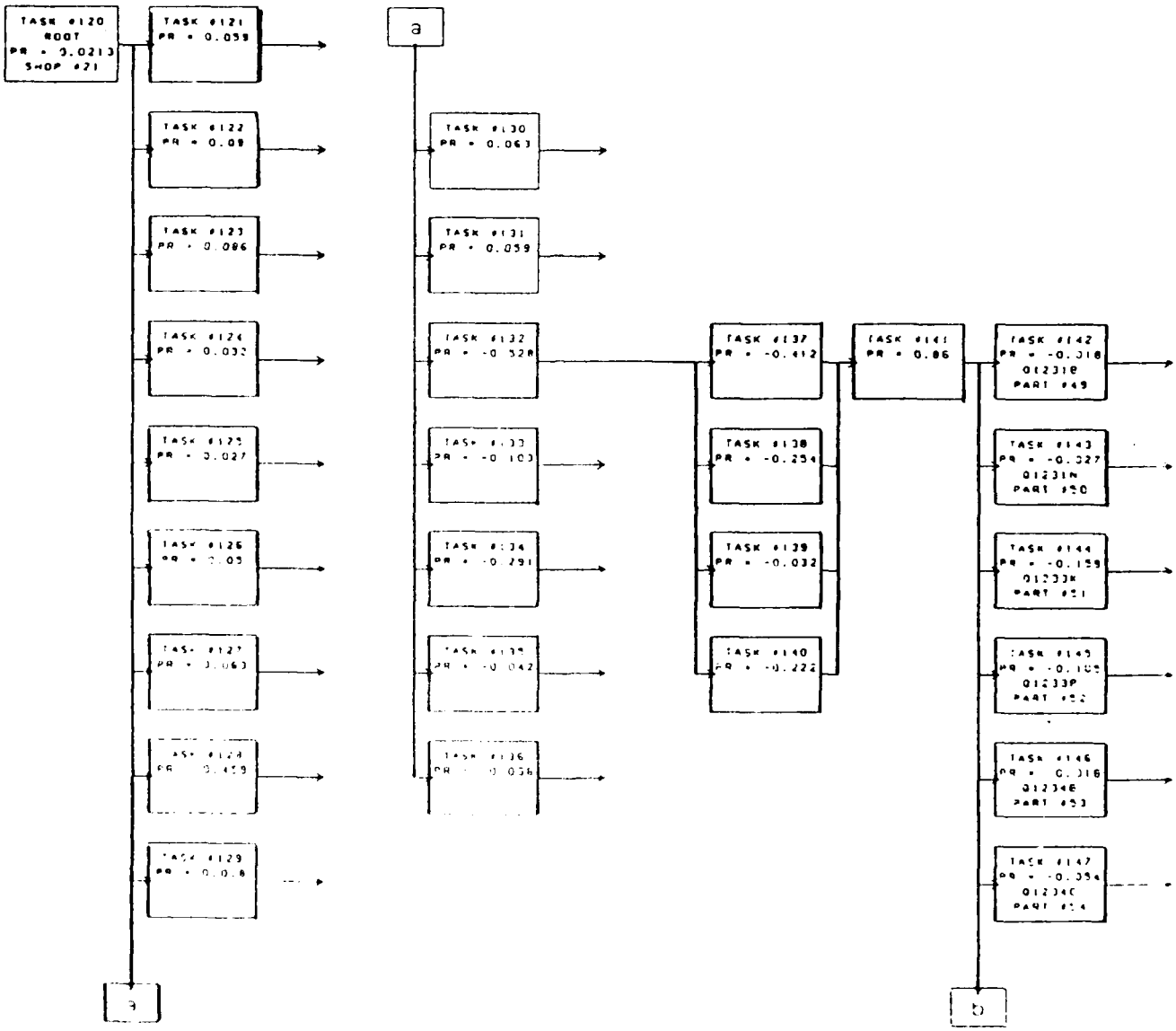

FIGURE 8a

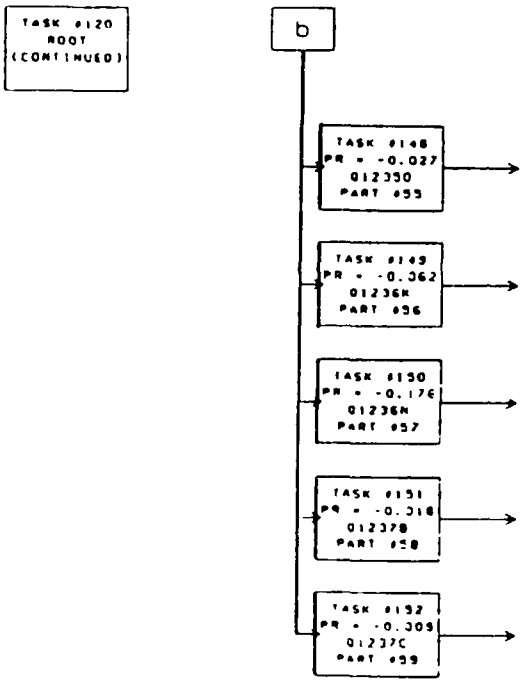
TASK #120
ROOT
(CONTINUED)
b
TASK #148
PR = -0.027
012350
PART #55
TASK #149
PR = -0.362
01236K
PART #56
TASK #150
PR = -0.176
01236N
PART #57
TASK #151
PR = -0.318
012378
PART #58
TASK #152
PR = -0.309
01237C
PART #59

FIGURE 8b

III.1.5.9 TASK #153 NETWORK - 13100 -- LANDING GEAR SYSTEM -

		PERSONNEL								
		TEAM 1		TEAM 2		AGE		PART		
SUBTASK	PROB	TYP	#	TYP	#	#1	#2	NO.	TIME	DIS
154	-.470	--	--	--	--	--	--	--	--	0
155	-.470	1	5	--	--	--	--	--	48	0
156	1.000	1	3	--	--	--	--	--	12	0
157	1.000	1	4	--	--	--	--	--	30	0
158	.102	3	1	--	--	--	--	--	60	0
159	.245	6	2	--	--	51	--	--	150	0
160	.041	9	2	--	--	--	--	--	60	0
161	.184	3	2	--	--	60	--	--	60	0
162	.041	6	2	--	--	--	--	--	90	0
163	.041	9	1	--	--	--	--	--	84	0
164	.020	3	1	--	--	60	--	--	96	0
165	.224	6	1	--	--	56	--	--	186	0
166	-.450	9	2	--	--	--	--	--	6	0
167	-.109	6	2	--	--	56	--	--	168	0
168	-.109	3	1	--	--	60	--	--	84	0
169	-.327	6	1	--	--	56	--	--	78	0
170	-.473	9	1	--	--	--	--	--	96	0
171	-.316	3	1	--	--	60	--	--	114	0
172	-.211	6	1	--	--	56	--	--	126	0
173	.952	--	--	--	--	--	--	--	--	0
174	-.040	--	--	--	--	--	--	60	--	0
175	.048	--	--	--	--	--	--	61	--	0
176	-.160	--	--	--	--	--	--	62	--	0

TOTAL NUMBER OF SUBTASKS = 23

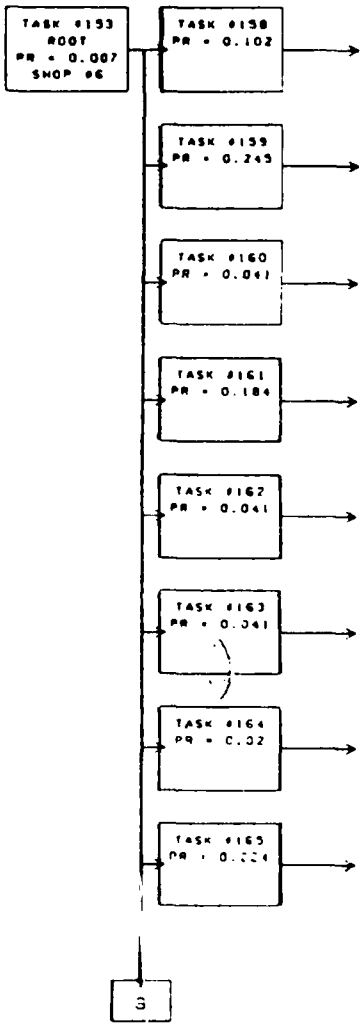
TASK #153
ROOT
PR = 0.007
SHOP #6
TASK #158
PR = 0.102
TASK #159
PR = 0.245
TASK #160
PR = 0.041
TASK #161
PR = 0.184
TASK #162
PR = 0.041
TASK #163
PR = 0.041
TASK #164
PR = 0.02
TASK #165
3

FIGURE 9a

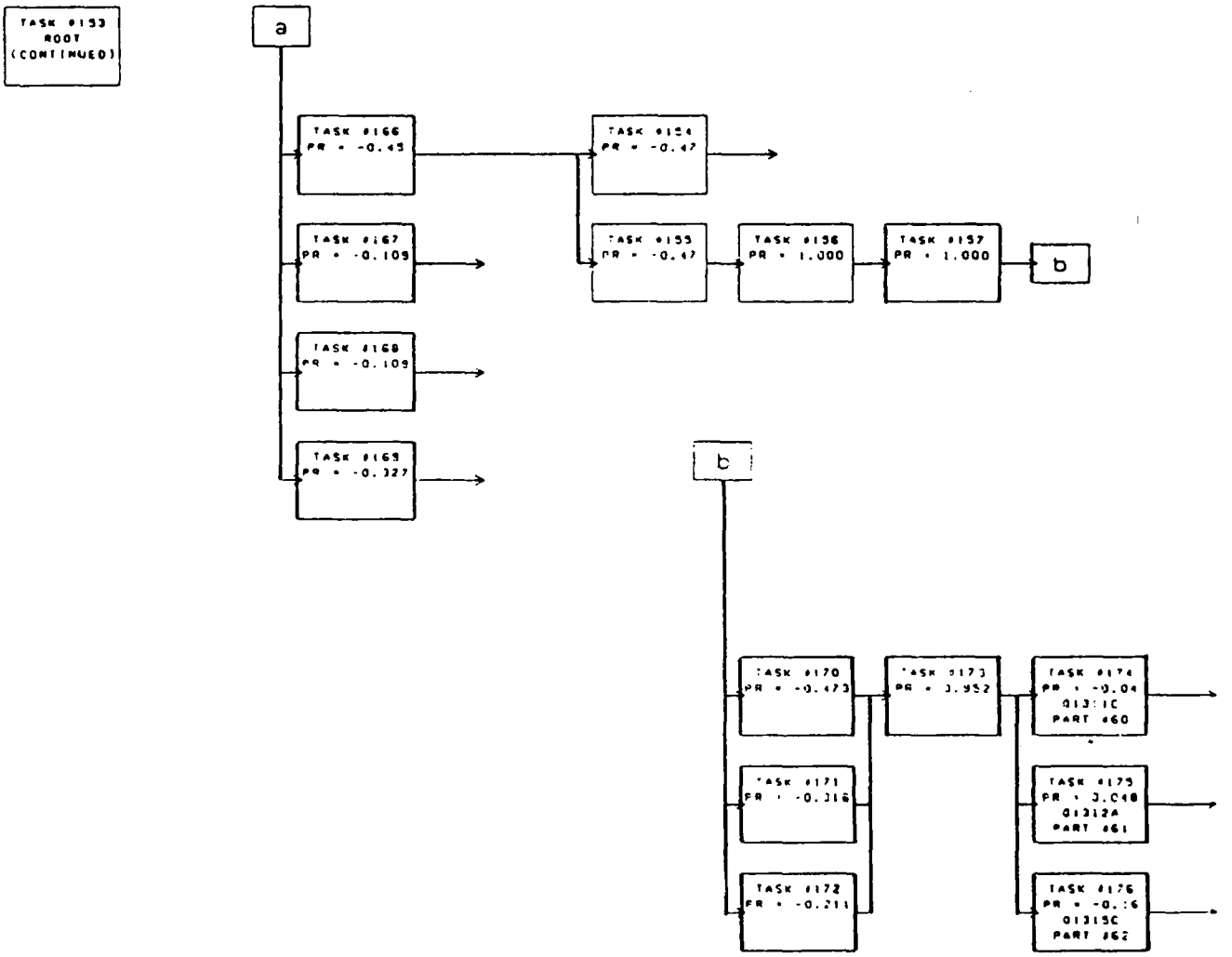
TASK #153
ROOT
(CONTINUED)
a
TASK #166
PR = -0.45
TASK #167
PR = -0.109
TASK #168
PR = -0.109
TASK #169
PR = -0.327
TASK #154
PR = -0.47
TASK #155
PR = -0.47
TASK #156
PR = 1.000
TASK #157
PR = 1.000
b
b
TASK #170
PR = -0.473
TASK #171
PR = -0.316
TASK #172
PR = -0.211
TASK #173
PR = 3.952
TASK #174
PR = -0.04
PART #60
TASK #175
PR = 3.048
01312A
PART #61
TASK #176
PART #62

FIGURE 9b

III 5.10 TASK #177 NETWORK - 13200 -- MAIN LANDING GEAR -

SUBTASK	PROB	PERSONNEL TEAM 1 TYP	TEAM 1 #	TEAM 2 TYP	TEAM 2 #	AGE #1	AGE #2	PART NO.	TIME	DIS
178	- 196	--	--	--	--	--	--	--	--	0
179	- 587	1	5	--	--	--	--	--	48	0
180	1 000	1	3	--	--	--	--	--	12	0
181	1 000	1	4	--	--	--	--	--	30	0
182	165	6	2	--	--	3	--	--	90	0
183	049	6	2	--	--	--	--	--	90	0
184	049	6	2	--	--	56	--	--	366	0
185	018	21	3	--	--	--	--	--	360	0
186	008	1	1	--	--	--	--	--	144	0
187	006	1	1	--	--	--	--	--	144	0
188	- 653	6	2	--	--	3	--	--	108	0
189	- 013	21	3	--	--	--	--	--	240	0
190	100	2	1	--	--	--	--	--	192	0
191	- 013	21	2	--	--	--	--	--	180	0
192	221	1	1	--	--	--	--	--	84	0
193	- 228	6	2	--	--	--	--	--	318	0
194	- 063	21	3	--	--	--	--	--	360	0
195	- 705	1	1	--	--	53	56	--	126	0
196	1 000	--	--	--	--	--	--	--	--	0
197	- 044	--	--	--	--	--	--	63	--	0
198	- 015	--	--	--	--	--	--	64	--	0
199	- 022	--	--	--	--	--	--	65	--	0
200	- 022	--	--	--	--	--	--	66	--	0
201	- 044	--	--	--	--	--	--	67	--	0
202	- 014	--	--	--	--	--	--	68	--	0
203	- 117	--	--	--	--	--	--	69	--	0
204	- 007	--	--	--	--	--	--	70	--	0
205	- 028	21	3	--	--	--	--	71	--	0
206	- 014	--	--	--	--	--	--	72	--	0
207	024	--	--	--	--	--	--	73	--	0
208	- 028	21	3	--	--	--	--	74	--	0

TOTAL NUMBER OF SUBTASKS = 32

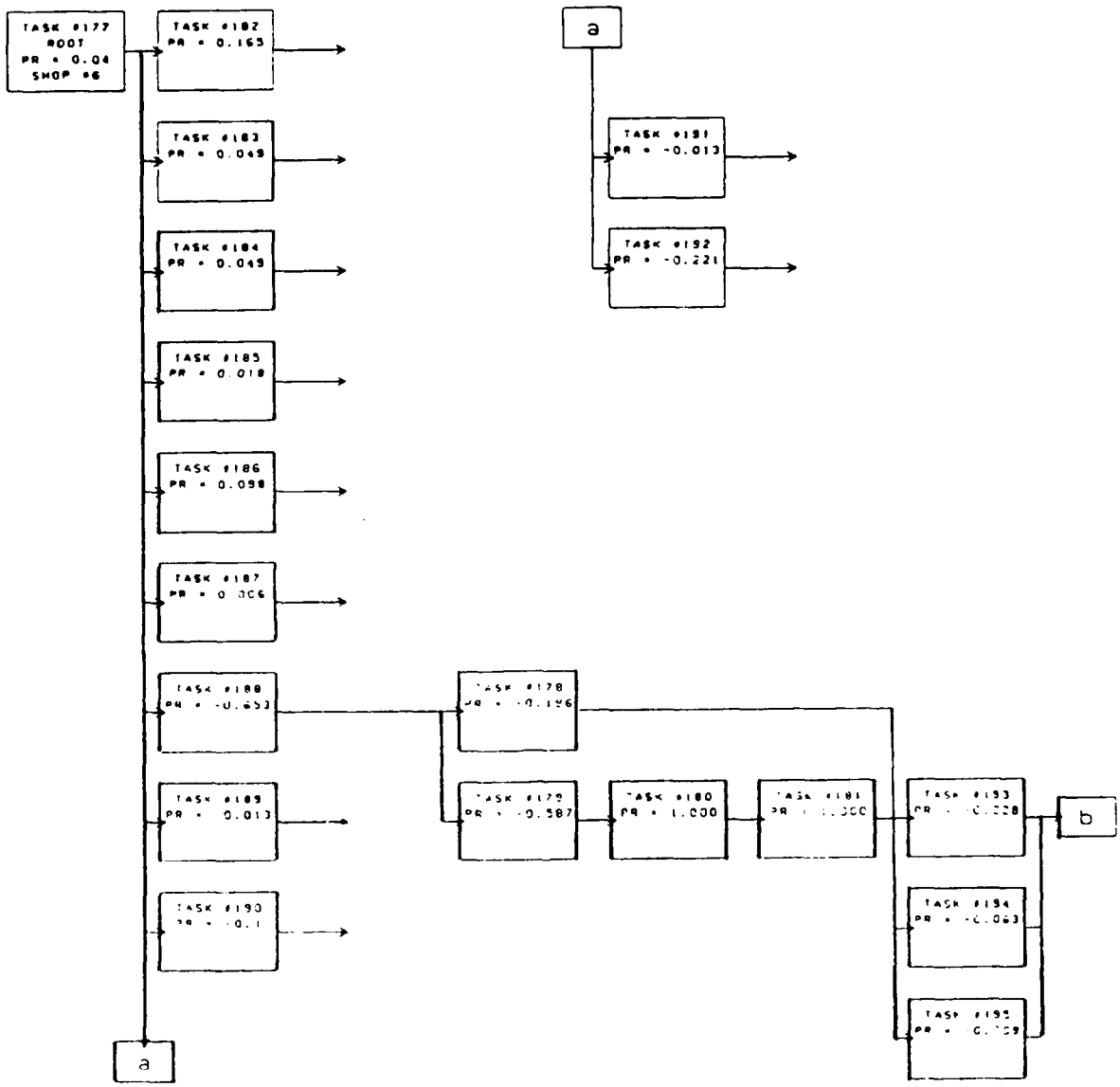
TASK #177
ROOT
PR = 0.04
SHOP #6
TASK #182
PR = 0.165
TASK #183
PR = 0.049
TASK #184
PR = 0.049
TASK #185
PR = 0.018
TASK #186
PR = 0.098
TASK #187
PR = 0.006
TASK #188
PR = -0.653
TASK #189
PR = 0.013
TASK #190
PR = -0.1
a
a
TASK #191
PR = -0.013
TASK #192
PR = -0.221
TASK #178
PR = -0.196
TASK #179
PR = -0.587
TASK #180
PR = 1.000
TASK #181
PR = 1.000
TASK #193
PR = -0.228
TASK #194
PR = -0.063
TASK #195
PR = -0.159
b

FIGURE 10a

AD-A169 575 TSAR (THEATER SIMULATION OF AIRBASE RESOURCES) DATABASE DICTIONARY F-4E(U) ORLANDO TECHNOLOGY INC SHALIMAR FL D ROBINSON ET AL. 28 MAR 86 2/4

UNCLASSIFIED F/G 5/2 NL

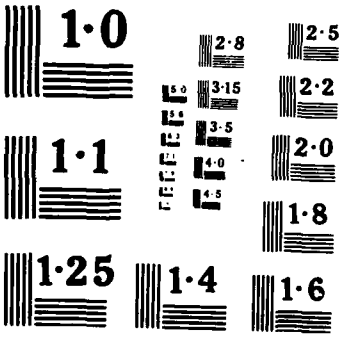
1·0
2·8
2·5
3·15
2·2
3·5
2·0
1·1
4·0
4·5
1·8
1·25
1·4
1·6

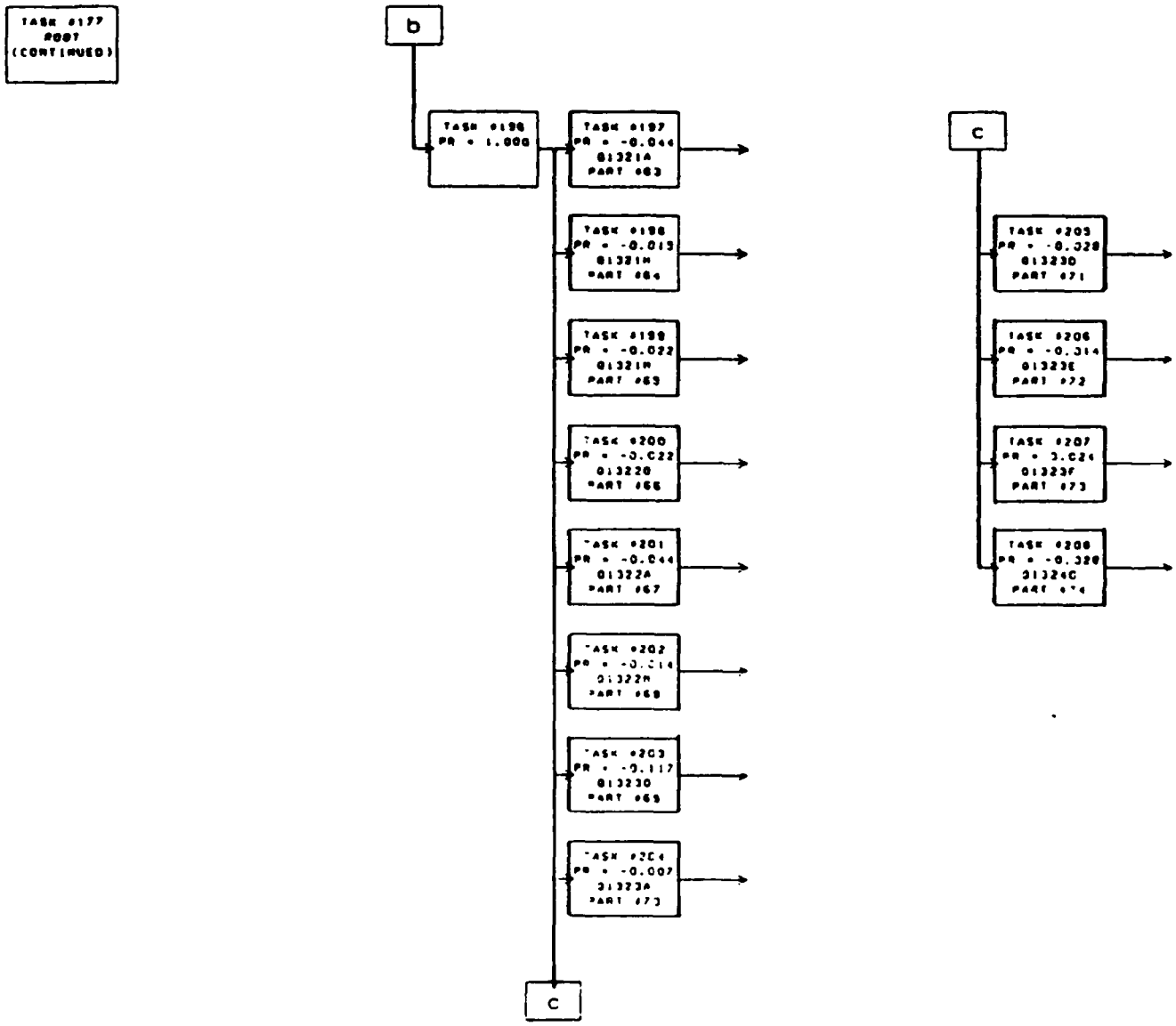
TASK #177
POOT
(CONTINUED)
b
TASK #196
PR = 1.000
TASK #197
PR = -0.044
013218
PART #63
TASK #198
PR = -0.013
013218
PART #64
TASK #199
PR = -0.022
013218
PART #65
TASK #200
PR = -0.022
013220
PART #66
TASK #201
PR = -0.044
013220
PART #67
TASK #202
PART #68
TASK #203
PR = -0.117
013230
PART #69
TASK #204
PR = -0.007
013230
PART #70
c
TASK #205
PR = -0.328
013230
PART #71
TASK #206
PR = -0.314
013230
PART #72
TASK #207
PR = 3.024
013230
PART #73
TASK #208
PART #74
c

FIGURE 10b

III.1.5.11 TASK #209 NETWORK - 13300 -- NOSE LANDING GEAR -

		PERSONNEL								
		TEAM 1		TEAM 2		AGE		PART		
SUBTASK	PROB	TYP	#	TYP	#	#1	#2	NO.	TIME	DIS
210	-.224	--	--	--	--	--	--	--	--	0
211	-.224	1	5	--	--	--	--	--	48	0
212	1.000	1	3	--	--	--	--	--	12	0
213	1.000	1	4	--	--	--	--	--	30	0
214	.114	6	2	--	--	--	--	--	90	0
215	.057	6	2	--	--	--	--	--	90	0
216	.033	21	2	--	--	--	--	--	120	0
217	.024	6	1	--	--	--	--	--	108	0
218	.016	21	2	--	--	--	--	--	300	0
219	.057	1	1	--	--	--	--	--	138	0
220	-.671	21	2	--	--	52	56	--	99	0
221	-.288	6	1	--	--	56	--	--	228	0
222	-.041	2	1	--	--	--	--	--	132	0
223	-.300	6	2	--	--	53	56	--	168	0
224	-.100	21	2	--	--	--	--	--	300	0
225	-.600	1	1	--	--	--	--	--	96	0
226	1.000	--	--	--	--	--	--	--	--	0
227	-.053	--	--	--	--	--	--	75	--	0
228	-.228	--	--	--	--	--	--	76	--	0
229	.081	--	--	--	--	--	--	77	--	0
230	-.088	--	--	--	--	--	--	78	--	0
231	-.018	--	--	--	--	--	--	79	--	0

TOTAL NUMBER OF SUBTASKS = 21

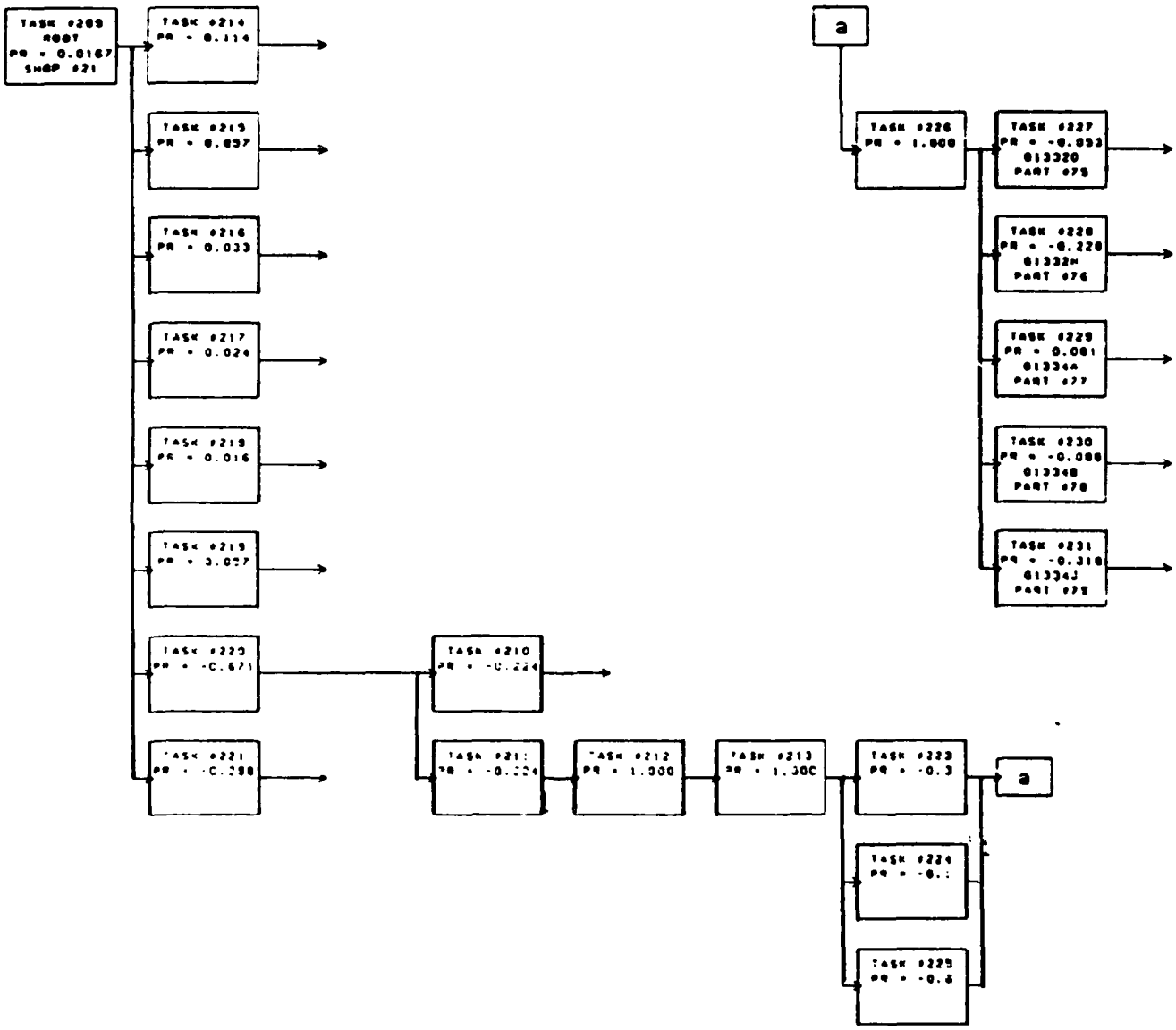
TASK #209
ROOT
PR = 0.0167
SHOP #21
TASK #214
PR = 0.114
TASK #215
PR = 0.037
TASK #216
PR = 0.033
TASK #217
PR = 0.024
TASK #218
PR = 0.016
TASK #219
PR = 3.057
TASK #220
PR = -0.671
TASK #221
TASK #210
PR = -0.224
TASK #211
PR = -0.224
TASK #212
PR = 1.000
TASK #213
PR = 1.000
TASK #223
PR = -0.3
TASK #224
TASK #225
a
a
TASK #226
PR = 1.000
TASK #227
PR = -0.053
013320
PART #75
TASK #228
PR = -0.228
01332H
PART #76
TASK #229
PR = 0.081
013344
PART #77
TASK #230
PR = -0.088
013348
PART #78
TASK #231
PR = -0.318
013344J
PART #79

FIGURE 11

III 1.5.12 TASK #232 NETWORK - 13400 -- WHEEL AND BRAKE ANTI-SKID SYSTEM -

		PERSONNEL								
		TEAM 1		TEAM 2		AGE		PART		
SUBTASK	PROB	TYP	#	TYP	#	#1	#2	NO.	TIME	DIS
233	.183	3	2	--	--	--	--	--	60	0
234	.106	6	2	--	--	--	--	--	60	0
235	.144	3	2	--	--	--	--	--	60	0
236	.029	6	2	--	--	--	--	--	60	0
237	.404	3	1	--	--	--	--	--	96	0
238	.096	6	1	--	--	56	--	--	150	0
239	.106	1	1	--	--	--	--	--	102	0
240	-.461	6	2	--	--	56	--	--	3	0
241	-.244	3	1	--	--	60	--	--	84	0
242	-.163	6	1	--	--	3	51	--	108	0
243	-.132	1	1	--	--	--	--	--	66	0
244	-.511	3	1	--	--	52	60	--	84	0
245	-.255	6	1	--	--	56	--	--	168	0
246	-.212	1	1	--	--	--	--	--	96	0
247	1.000	--	--	--	--	--	--	--	--	0
248	-.032	6	1	--	--	--	--	80	--	0
249	-.065	--	--	--	--	--	--	81	--	0
250	-.162	6	1	--	--	--	--	82	--	0
251	-.016	--	--	--	--	--	--	83	--	0
252	-.032	--	--	--	--	--	--	84	--	0
253	-.194	--	--	--	--	--	--	85	--	0
254	-.032	--	--	--	--	--	--	86	--	0
255	.383	--	--	--	--	--	--	87	--	0
256	.021	--	--	--	--	--	--	88	--	0
259	-.145	--	--	--	--	--	--	90	--	0
260	-.244	--	--	--	--	--	--	91	--	0

TOTAL NUMBER OF SUBTASKS = 24

RESOURCE REQUIREMENTS
AIRCRAFT, PART AND SUPPORT EQUIPMENT REPAIR DATA

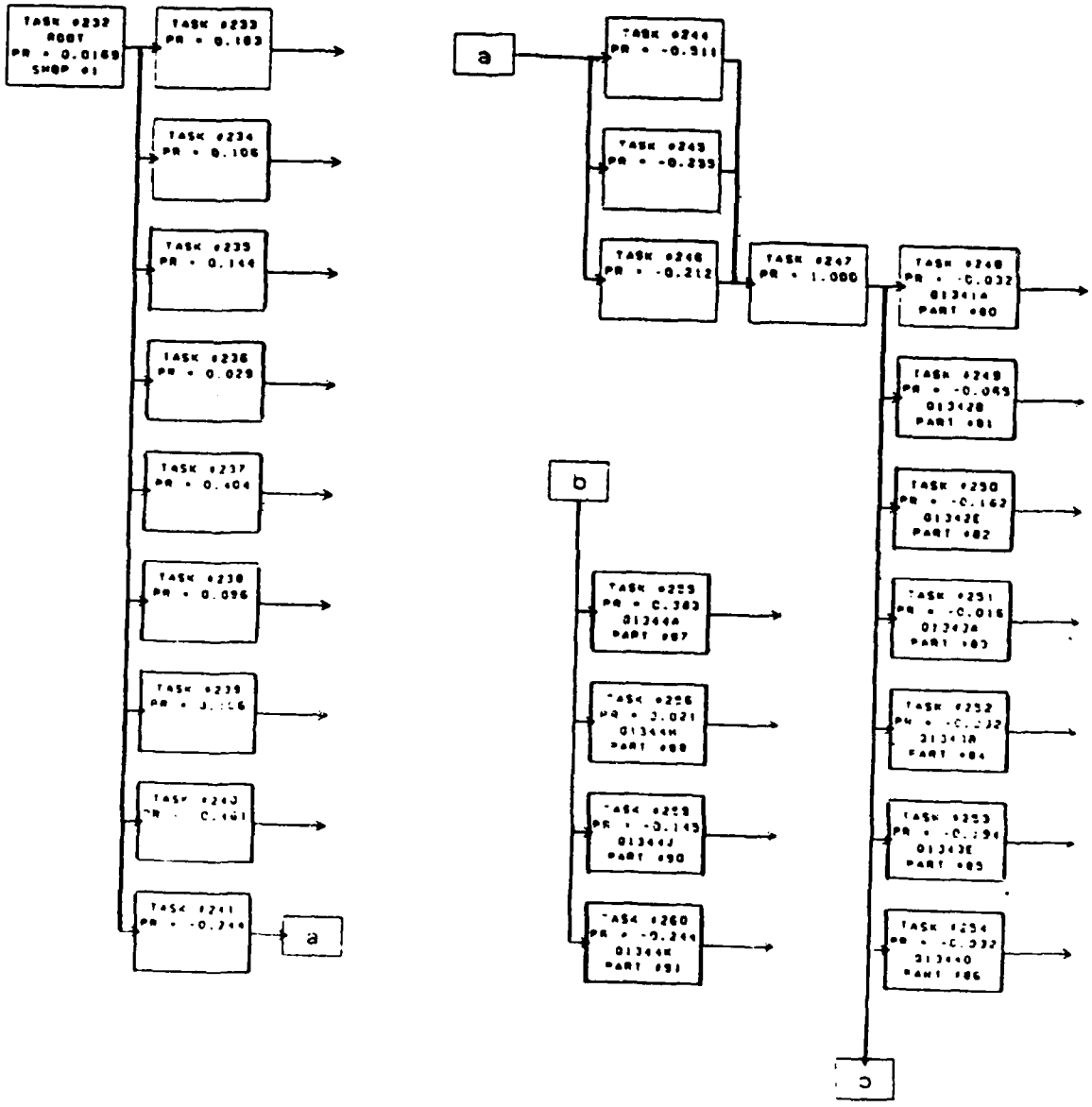

FIGURE 12

III 1.5.13 TASK #261 NETWORK - 13500 -- ARRESTING GEAR SYSTEM -

		PERSONNEL								
		TEAM 1		TEAM 2		AGE		PART		
SUBTASK	PROB	TYP	#	TYP	#	#1	#2	NO.	TIME	DIS
262	.023	3	2	--	--	--	--	--	30	0
263	.047	6	2	--	--	--	--	--	60	0
264	.047	3	2	--	--	--	--	--	60	0
265	.047	6	2	--	--	--	--	--	60	0
266	.093	1	1	--	--	--	--	--	138	0
267	- .510	3	1	--	--	60	--	--	36	0
268	- .027	6	1	--	--	--	--	--	108	0
269	- .242	2	1	--	--	--	--	--	102	0
270	- .215	1	1	--	--	--	--	--	90	0
271	- .135	3	1	--	--	60	--	--	84	0
272	- .045	6	2	--	--	--	--	--	228	0
273	- .404	1	1	--	--	--	--	--	96	0
274	1.000	--	--	--	--	--	--	--	--	0
275	- .050	--	--	--	--	--	--	92	--	0
276	- .500	--	--	--	--	--	--	93	--	0

TOTAL NUMBER OF SUBTASKS = 15

RESOURCE REQUIREMENTS
AIRCRAFT, PART AND SUPPORT EQUIPMENT REPAIR DATA

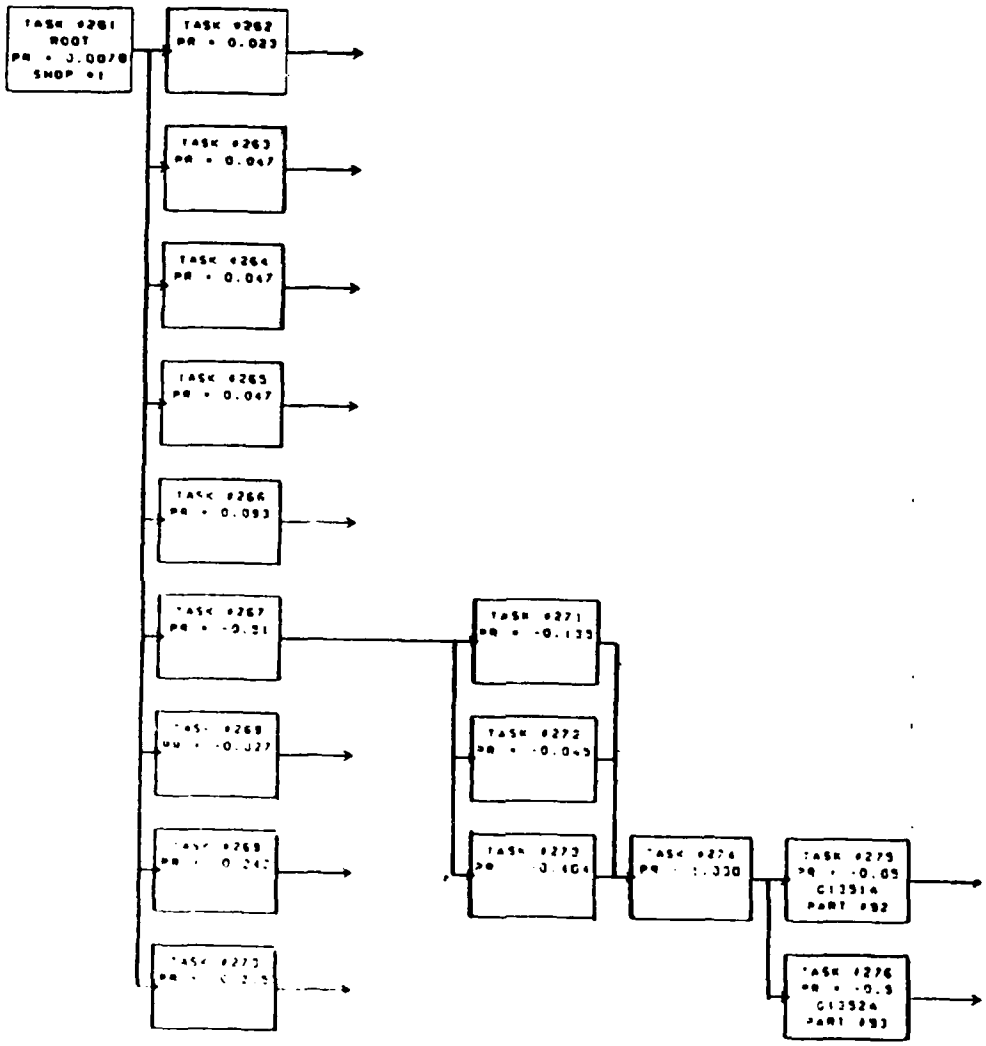

FIGURE 13

III 1.5.14 TASK #277 NETWORK - 14100 -- CONTROL STICK MECHANISM -

		PERSONNEL								
		TEAM 1		TEAM 2		AGE		PART		
SUBTASK	PROB	TYP	#	TYP	#	#1	#2	NO.	TIME	DIS
278	.071	8	1	--	--	--	--	--	18	0
279	.048	3	2	--	--	--	--	--	60	0
280	.024	21	2	--	--	--	--	--	60	0
281	.095	21	2	--	--	--	--	--	240	0
282	.310	8	1	--	--	--	--	--	120	0
283	.048	3	1	--	--	--	--	--	132	0
284	.095	21	2	--	--	--	--	--	420	0
285	-.384	3	2	--	--	60	--	--	9	0
286	-.196	21	2	--	--	--	--	--	168	0
287	-.308	8	1	--	--	60	--	--	78	0
288	-.112	3	1	--	--	60	--	--	84	0
289	-.618	8	1	--	--	60	--	--	102	0
290	-.309	3	1	--	--	60	--	--	114	0
291	.933	--	--	--	--	--	--	--	--	0
292	.270	8	1	3	1	--	--	94	--	0

TOTAL NUMBER OF SUBTASKS = 15

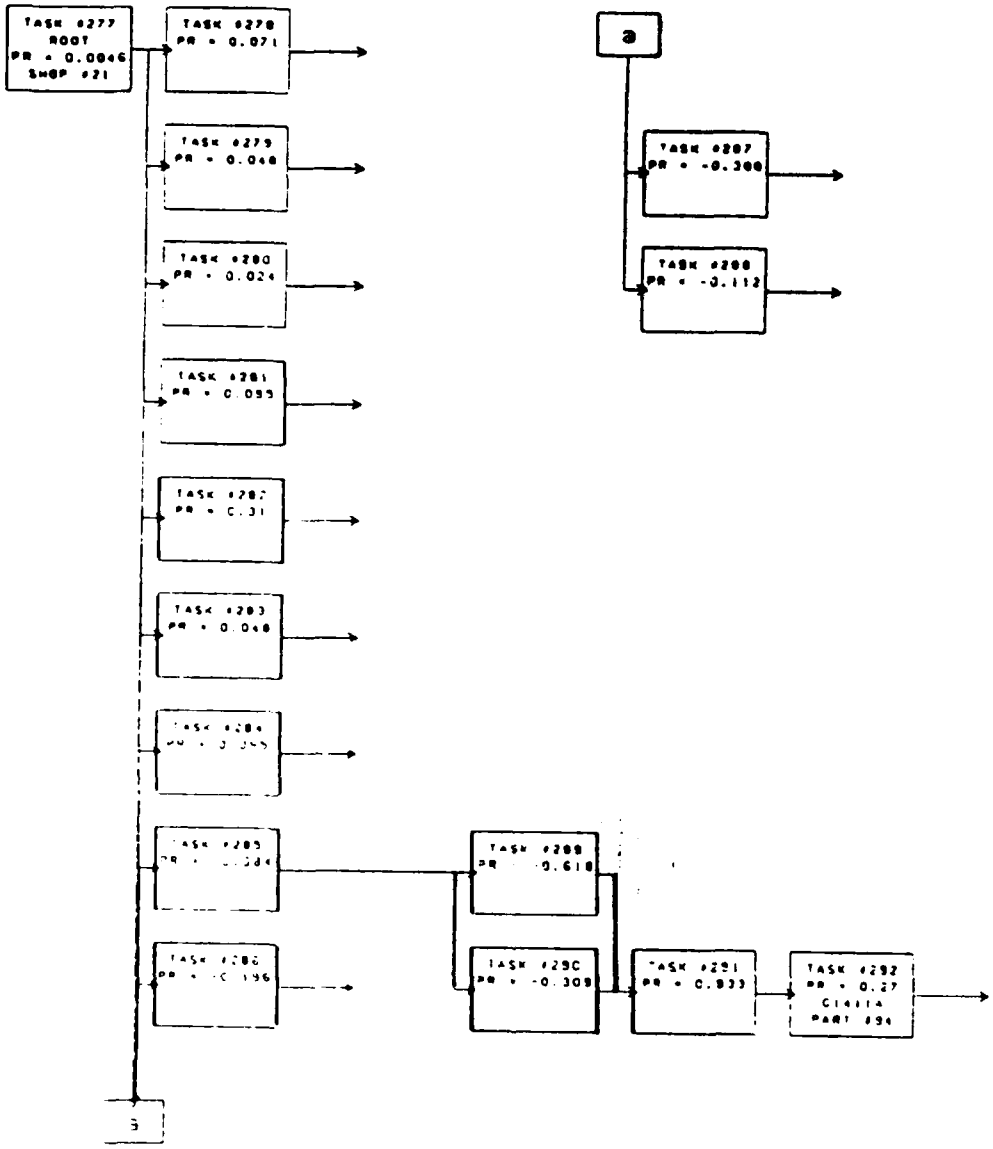
TASK #277
ROOT
PR = 0.0046
SHOP #21
TASK #278
PR = 0.071
TASK #279
PR = 0.048
TASK #280
PR = 0.024
TASK #281
PR = 0.055
TASK #283
PR = 0.048
a
TASK #287
PR = -0.388
TASK #288
PR = -0.112
TASK #289
PR = -0.618
TASK #290
PR = -0.309
TASK #291
PR = 0.933
TASK #292
PR = 0.27
PART #94
b

FIGURE 14

III 1 5 15 TASK #293 NETWORK - 14200 -- LATERAL CONTROL SYSTEM -

SUBTASK	PROB	PERSONNEL TEAM 1 TYP	TEAM 1 #	TEAM 2 TYP	TEAM 2 #	AGE #1	AGE #2	PART NO.	TIME	DIS
294	.035	8	2	--	--	--	--	--	60	0
295	.030	3	2	--	--	--	--	--	60	0
296	.025	6	2	--	--	--	--	--	60	0
297	.065	21	2	--	--	--	--	--	120	0
298	.010	8	2	--	--	--	--	--	120	0
299	.030	3	2	--	--	--	--	--	90	0
300	.025	6	2	--	--	--	--	--	90	0
301	.060	21	2	--	--	--	--	--	300	0
302	.045	6	1	--	--	--	--	--	198	0
303	.055	21	2	--	--	--	--	--	240	0
304	-.158	6	2	--	--	56	60	--	15	0
305	-.501	21	2	--	--	--	--	--	240	0
306	-.017	8	2	--	--	--	--	--	180	0
307	-.028	3	1	--	--	--	--	--	114	0
308	-.114	6	1	--	--	50	56	--	588	0
309	-.182	2	1	--	--	--	--	--	192	0
310	-.782	6	1	--	--	56	60	--	168	0
311	-.105	21	2	--	--	--	--	--	240	0
312	.857	--	--	--	--	--	--	--	--	0
313	-.109	--	--	--	--	--	--	95	--	0
314	.036	--	--	--	--	--	--	96	--	0
315	-.054	--	--	--	--	--	--	97	--	0
316	-.162	--	--	--	--	--	--	98	--	0
317	-.054	--	--	--	--	--	--	99	--	0
318	-.054	--	--	--	--	--	--	100	--	0

TOTAL NUMBER OF SUBTASKS = 25

RESOURCE REQUIREMENTS
AIRCRAFT, PART AND SUPPORT EQUIPMENT REPAIR DATA

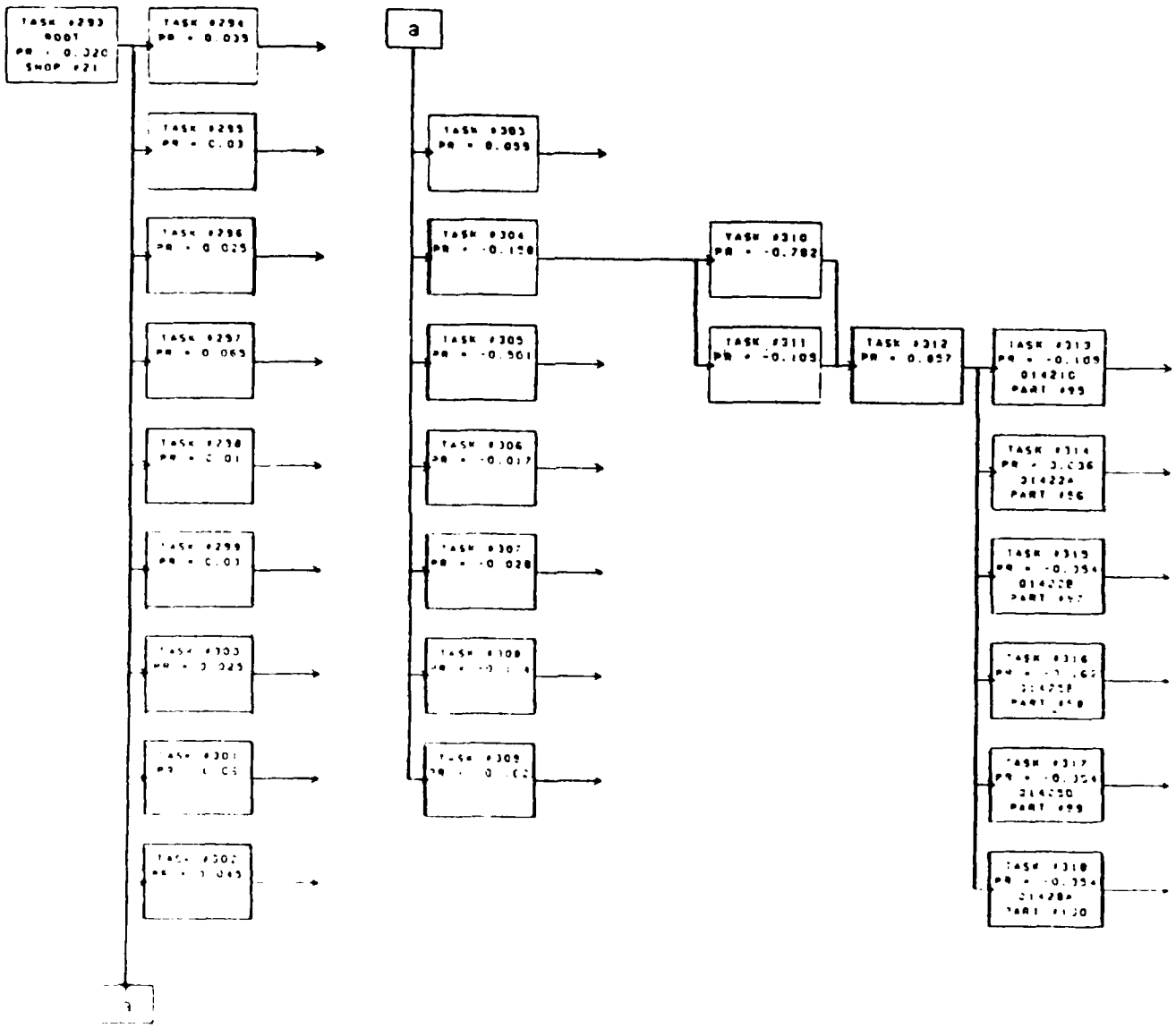

FIGURE 15

III 1 5 16 TASK #319 NETWORK - 14300 -- STABILATOR SYSTEM -

SUBTASK	PROB	PERSONNEL TEAM 1 TYP	TEAM 1 #	TEAM 2 TYP	TEAM 2 #	AGE #1	AGE #2	PART NO.	TIME	DIS
320	.057	6	2	--	--	--	--	--	90	0
321	.033	3	2	--	--	--	--	--	60	0
322	.110	6	2	--	--	--	--	--	60	0
323	.020	21	2	--	--	--	--	--	60	0
324	.008	9	2	--	--	--	--	--	60	0
325	.033	3	2	--	--	--	--	--	30	0
326	.045	6	2	--	--	--	--	--	90	0
327	.033	21	2	--	--	--	--	--	120	0
328	.053	6	1	--	--	--	--	--	306	0
329	.020	21	2	--	--	--	--	--	240	0
330	-.283	9	2	--	--	60	--	--	3	0
331	-.014	3	2	--	--	60	--	--	114	0
332	-.014	6	2	--	--	56	60	--	108	0
333	-.124	21	2	--	--	43	--	--	186	0
334	-.014	8	2	--	--	60	--	--	180	0
335	-.006	9	1	--	--	60	--	--	84	0
336	-.057	3	1	--	--	60	--	--	114	0
337	-.067	6	1	--	--	56	--	--	102	0
338	-.421	2	1	--	--	--	--	--	192	0
339	-.172	9	1	--	--	60	--	--	84	0
340	-.461	6	1	--	--	56	--	--	288	0
341	-.346	21	2	--	--	--	--	--	240	0
342	.985	--	--	--	--	--	--	--	--	0
343	-.089	6	2	--	--	--	--	101	--	0
344	-.090	--	--	--	--	--	--	102	--	0
345	-.022	--	--	--	--	--	--	103	--	0

TOTAL NUMBER OF SUBTASKS =26

RESOURCE REQUIREMENTS
AIRCRAFT, PART AND SUPPORT EQUIPMENT REPAIR DATA

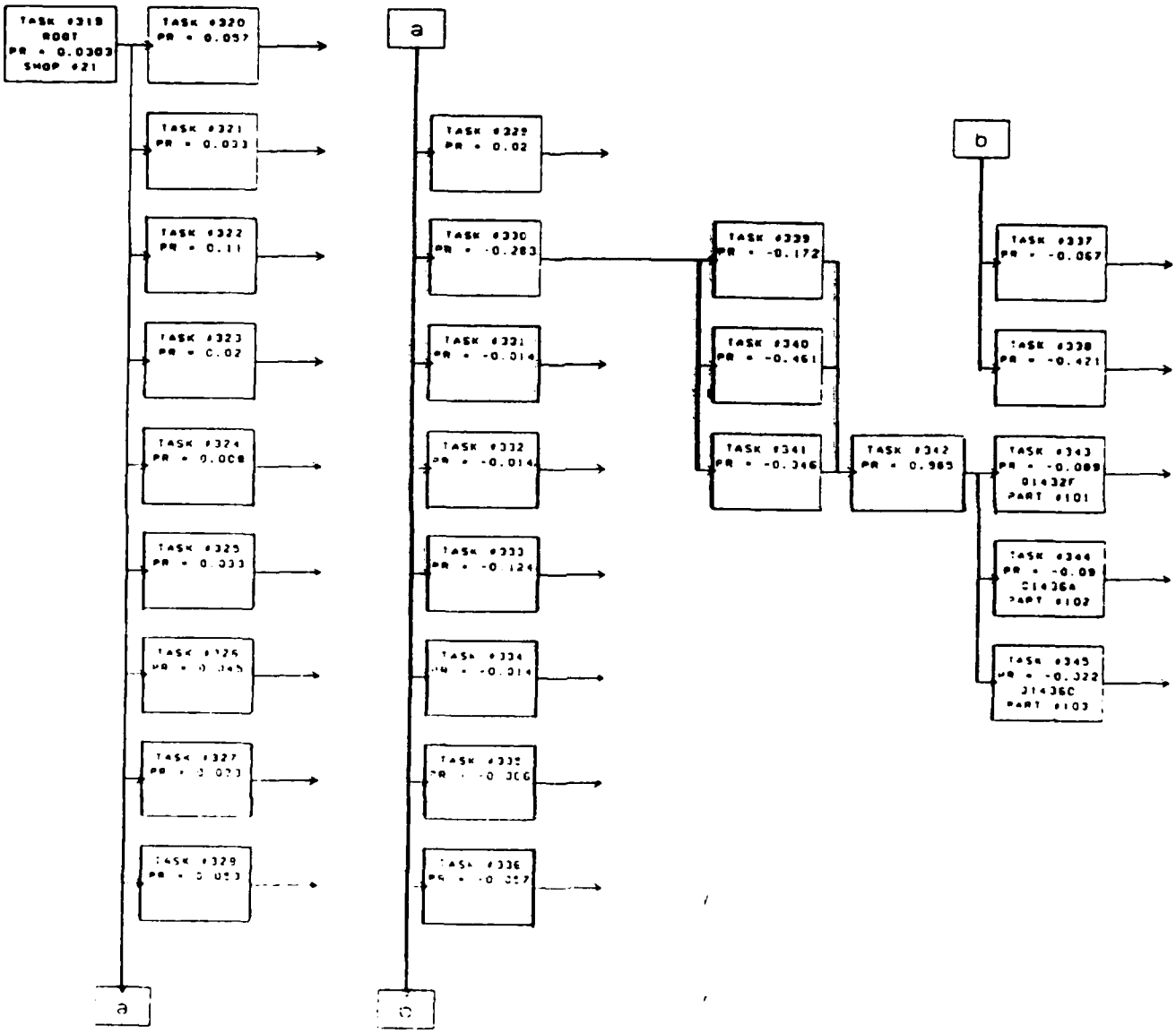

FIGURE 16

III.1.5.17 TASK #346 NETWORK - 14400 -- RUDDER SYSTEM -

		PERSONNEL								
		TEAM 1		TEAM 2		AGE		PART		
SUBTASK	PROB	TYP	#	TYP	#	#1	#2	NO.	TIME	DIS
347	.262	8	2	--	--	--	--	--	60	0
348	.190	6	2	--	--	--	--	--	60	0
349	.024	2	1	--	--	--	--	--	18	0
350	.095	21	2	--	--	--	--	--	60	0
351	.048	8	2	--	--	--	--	--	72	0
352	.024	9	2	--	--	--	--	--	108	0
353	.071	6	2	--	--	--	--	--	90	0
354	.119	21	2	--	--	--	--	--	120	0
355	.048	9	1	--	--	--	--	--	252	0
356	.167	6	1	--	--	--	--	--	180	0
357	.119	21	2	--	--	--	--	--	240	0
358	-.864	21	2	--	--	--	--	--	102	0
359	-.034	9	2	--	--	60	--	--	144	0
360	-.102	2	1	--	--	--	--	--	192	0
361	-.059	9	1	--	--	60	--	--	234	0
362	-.295	6	1	--	--	56	60	--	228	0
363	-.059	21	2	--	--	--	--	--	300	0
364	1.000	--	--	--	--	--	--	--	--	0
365	-.114	--	--	--	--	--	--	104	--	0
366	-.087	--	--	--	--	--	--	105	--	0
367	-.371	6	2	--	--	--	--	106	--	0
368	.067	--	--	--	--	--	--	107	--	0
369	.067	--	--	--	--	--	--	108	--	0
370	-.029	21	2	--	--	--	--	109	--	0
371	-.114	--	--	--	--	--	--	110	--	0

TOTAL NUMBER OF SUBTASKS = 25

RESOURCE REQUIREMENTS
AIRCRAFT, PART AND SUPPORT EQUIPMENT REPAIR DATA

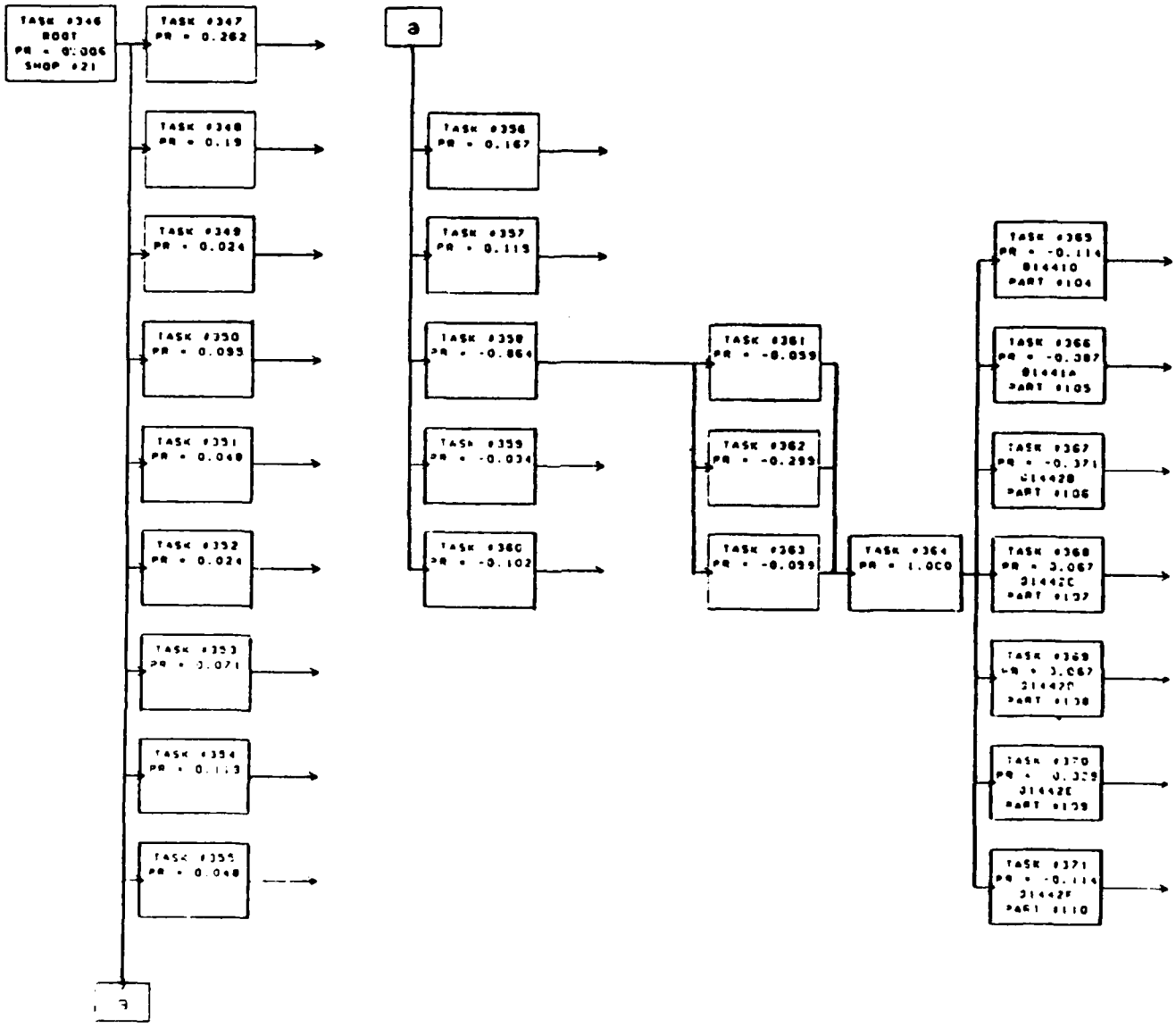

FIGURE 17

III 1 5 18 TASK #372 NETWORK - 14500 -- FLAP SYSTEM -

		PERSONNEL								
		TEAM 1		TEAM 2		AGE		PART		
SUBTASK	PROB	TYP	#	TYP	#	#1	#2	NO.	TIME	DIS
373	.047	9	2	--	--	--	--	--	60	0
374	.058	3	2	--	--	--	--	--	60	0
375	.186	6	2	--	--	--	--	--	90	0
376	.012	9	2	--	--	--	--	--	120	0
377	.035	3	2	--	--	--	--	--	30	0
378	.105	6	2	--	--	--	--	--	120	0
379	.012	21	2	--	--	--	--	--	120	0
380	.035	9	1	--	--	--	--	--	156	0
381	.151	6	1	--	--	--	--	--	180	0
382	-.283	3	2	--	--	--	--	--	6	0
383	-.015	6	2	--	--	56	--	--	138	0
384	-.030	3	1	--	--	60	--	--	114	0
385	-.314	6	1	--	--	51	--	--	108	0
386	-.209	2	1	--	--	--	--	--	192	0
387	-.149	21	2	--	--	--	--	--	630	0
388	-.210	9	1	--	--	60	--	--	144	0
389	-.105	3	1	--	--	60	--	--	144	0
390	-.632	6	2	--	--	60	56	--	228	0
391	1.000	--	--	--	--	--	--	--	--	0
392	-.417	--	--	--	--	--	--	111	--	0
393	-.138	--	--	--	--	--	--	112	--	0
394	-.069	--	--	--	--	--	--	113	--	0
395	-.069	--	--	--	--	--	--	114	--	0

TOTAL NUMBER OF SUBTASKS = 23

RESOURCE REQUIREMENTS
AIRCRAFT, PART AND SUPPORT EQUIPMENT REPAIR DATA

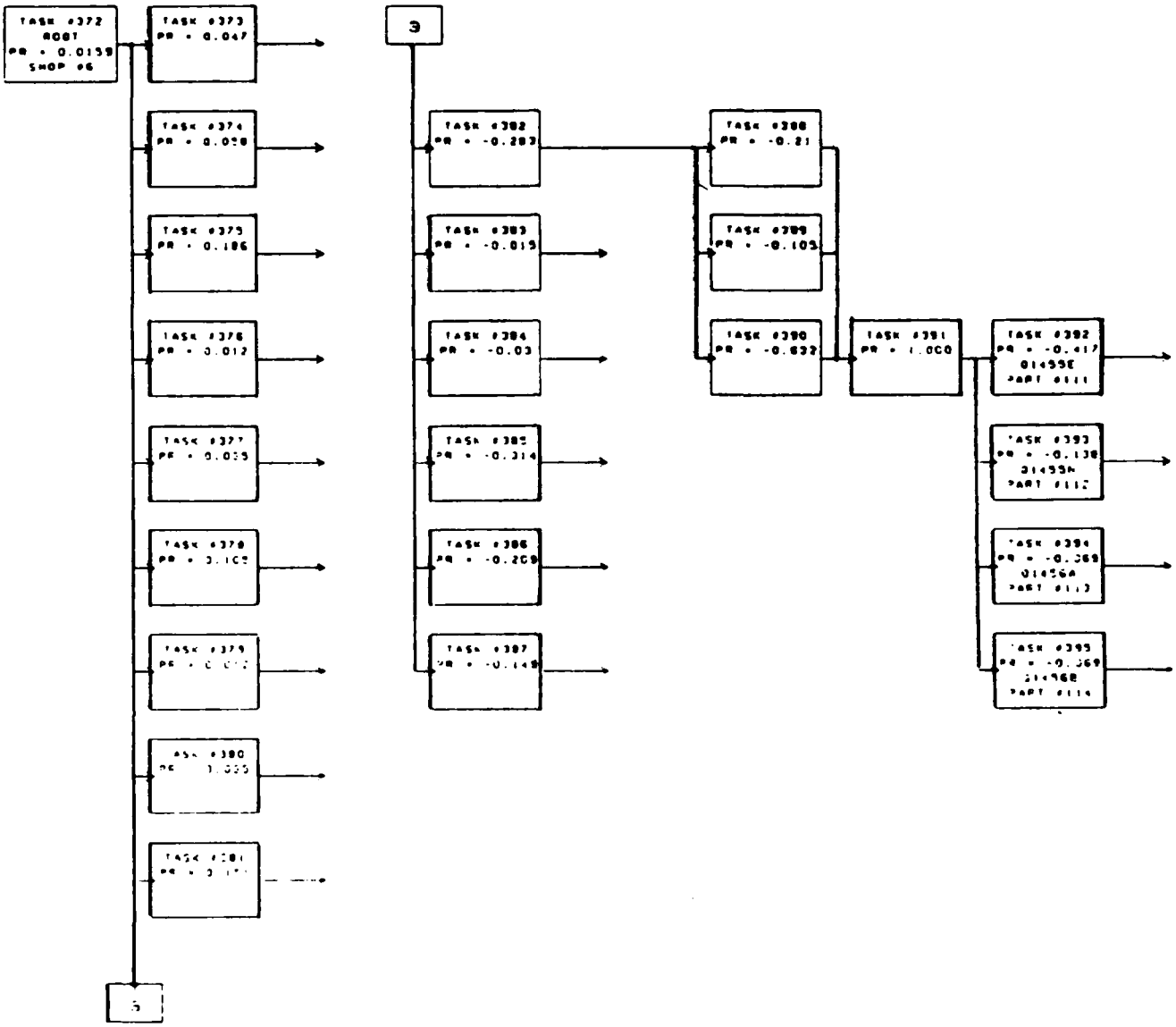

FIGURE 18

III.1.5.19 TASK #396 NETWORK - 14600 -- SPEED BRAKE SYSTEM -

		PERSONNEL								
		TEAM 1		TEAM 2		AGE		PART		
SUBTASK	PROB	TYP	#	TYP	#	#1	#2	NO.	TIME	DIS
397	.105	3	2	--	--	--	--	--	60	0
398	.105	6	2	--	--	--	--	--	60	0
399	.053	2	1	--	--	--	--	--	18	0
400	.079	6	2	--	--	--	--	--	60	0
401	.053	6	2	--	--	--	--	--	168	0
402	-.290	3	2	--	--	60	--	--	24	0
403	-.235	3	1	--	--	60	--	--	84	0
404	-.176	6	2	--	--	56	60	--	78	0
405	-.293	2	1	--	--	--	--	--	192	0
406	-.601	3	1	--	--	60	--	--	114	0
407	-.200	6	1	--	--	56	60	--	168	0
408	1.000	--	--	--	--	--	--	--	--	0
409	-.201	--	--	--	--	--	--	115	--	0
410	.222	--	--	--	--	--	--	116	--	0
411	-.033	--	--	--	--	--	--	117	--	0
412	-.033	--	--	--	--	--	--	118	--	0

TOTAL NUMBER OF SUBTASKS = 16

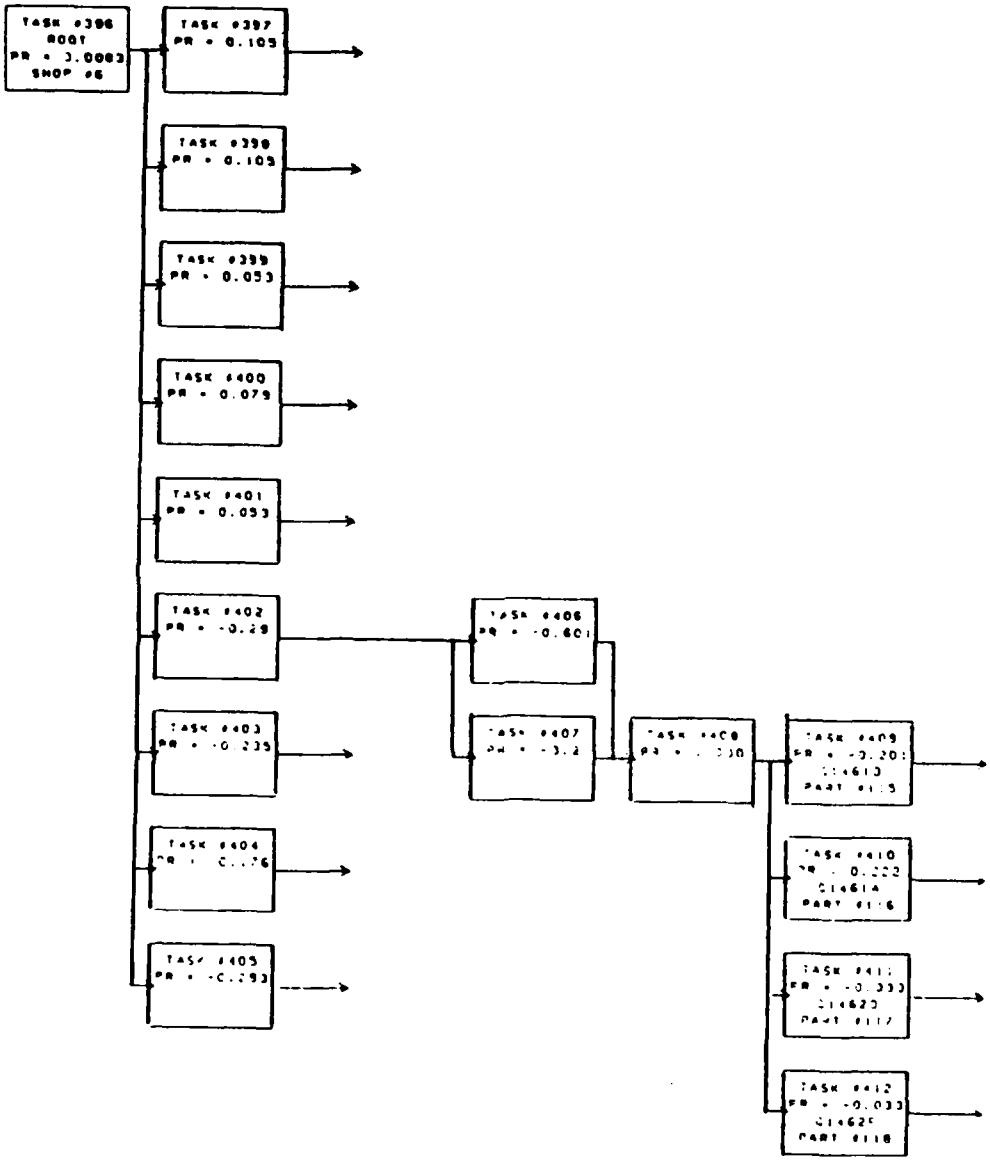
TASK #396
ROOT
PR = 3.0083
SHOP #6
TASK #397
PR = 0.105
TASK #398
PR = 0.105
TASK #399
PR = 0.053
TASK #400
PR = 0.079
TASK #401
PR = 0.053
TASK #402
PR = -0.29
TASK #403
PR = -0.235
TASK #404
TASK #405
TASK #406
PR = -0.601
TASK #407
TASK #408
TASK #409
TASK #410
PR = 0.222
TASK #411
PR = -0.333
TASK #412
PR = -0.033

FIGURE 19

III.1.5.20 TASK #413 NETWORK - 14800 -- LEADING EDGE SLAT SYSTEM -

SUBTASK	PROB	PERSONNEL TEAM 1 TYP	TEAM 1 #	TEAM 2 TYP	TEAM 2 #	AGE #1	AGE #2	PART NO.	TIME	DIS
414	.023	9	2	--	--	--	--	--	60	0
415	.064	3	2	--	--	--	--	--	60	0
416	.100	6	2	--	--	--	--	--	60	0
417	.018	21	2	--	--	--	--	--	60	0
418	.023	9	2	--	--	--	--	--	90	0
419	.096	3	2	--	--	--	--	--	42	0
420	.091	6	2	--	--	--	--	--	60	0
421	.100	21	2	--	--	--	--	--	120	0
422	.027	9	1	--	--	--	--	--	192	0
423	.009	3	1	--	--	--	--	--	132	0
424	.128	6	1	--	--	--	--	--	210	0
425	.183	21	2	--	--	--	--	--	180	0
426	-.441	6	2	--	--	56	60	--	3	0
427	-.304	21	2	--	--	--	--	--	216	0
428	-.005	9	2	--	--	60	--	--	114	0
429	-.080	3	1	--	--	60	--	--	84	0
430	-.154	6	1	--	--	56	60	--	96	0
431	-.016	2	1	--	--	--	--	--	162	0
432	-.084	9	1	--	--	60	--	--	174	0
433	-.265	3	1	--	--	60	--	--	114	0
434	-.229	6	1	--	--	56	60	--	168	0
435	-.397	21	2	--	--	--	--	--	180	0
436	.819	--	--	--	--	--	--	--	--	0
437	.064	--	--	--	--	--	--	119	--	0
438	-.076	--	--	--	--	--	--	120	--	0
439	-.076	--	--	--	--	--	--	121	--	0
440	-.141	--	--	--	--	--	--	122	--	0
441	-.033	--	--	--	--	--	--	123	--	0

TOTAL NUMBER OF SUBTASKS = 28

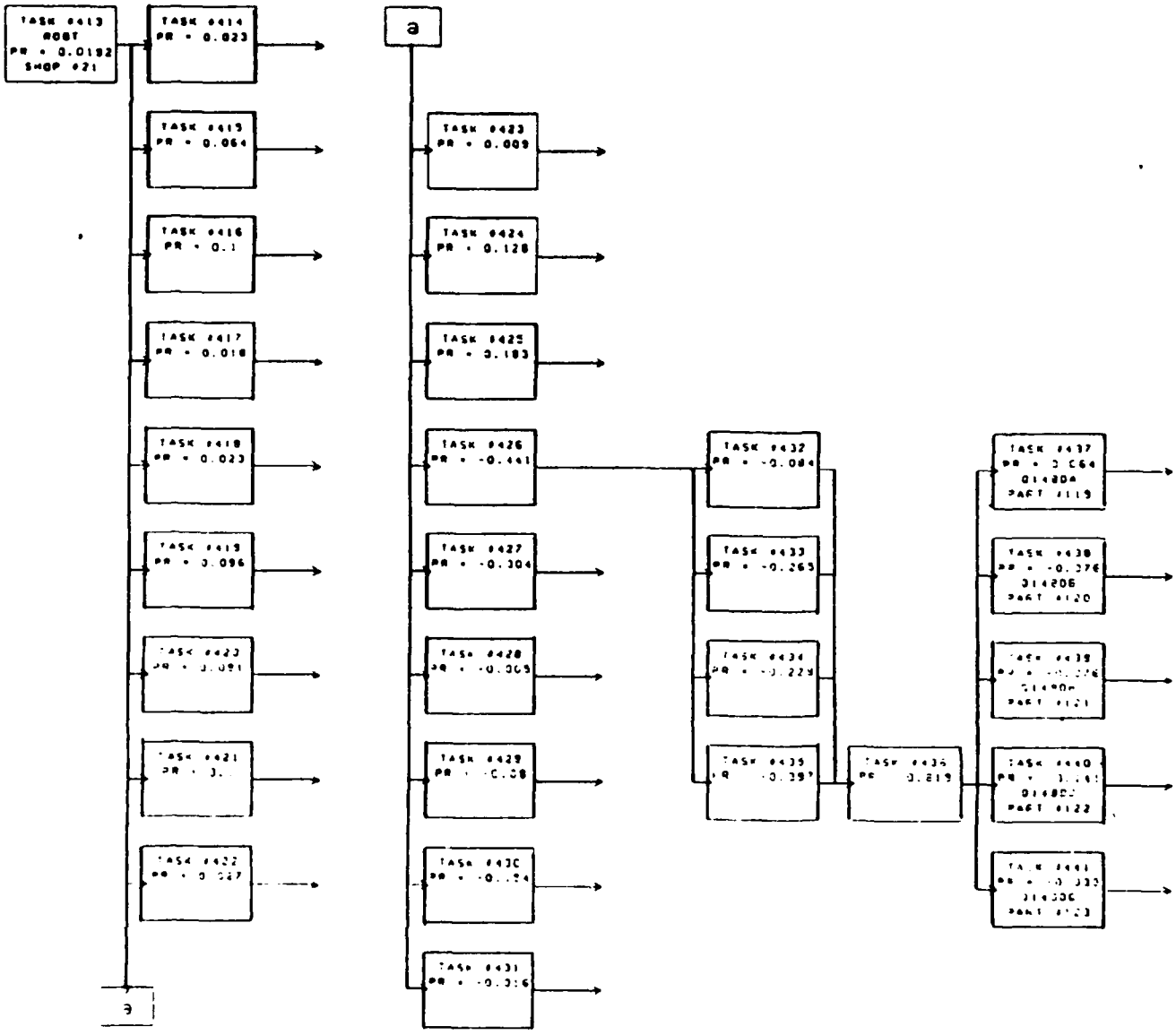
TASK #413
ROOT
PR = 0.0192
SHOP #21
TASK #414
PR = 0.023
TASK #415
PR = 0.064
TASK #416
PR = 0.1
TASK #417
PR = 0.018
TASK #418
PR = 0.023
TASK #419
PR = 0.096
TASK #420
TASK #421
TASK #422
a
TASK #423
PR = 0.009
TASK #424
PR = 0.128
TASK #425
PR = 0.183
TASK #426
PR = -0.441
TASK #427
PR = -0.304
TASK #428
TASK #429
TASK #430
TASK #431
TASK #432
PR = -0.084
TASK #433
PR = -0.265
TASK #434
TASK #435
TASK #436
TASK #437
TASK #438
TASK #439
TASK #440
TASK #441
a

FIGURE 20

III 1 5.21 TASK #442 NETWORK - 41100 -- AIR CONDITIONING -

SUBTASK	PROB	PERSONNEL TEAM 1 TYP	TEAM 1 #	TEAM 2 TYP	TEAM 2 #	AGE #1	AGE #2	PART NO.	TIME	DIS
443	.380	4	2	--	--	--	--	--	60	0
444	.263	4	2	--	--	--	--	--	90	0
445	.124	4	1	--	--	--	--	--	186	0
446	1.000	4	2	--	--	--	--	--	33	0
447	-.365	9	1	--	--	45	60	--	84	0
448	-.322	4	2	--	--	44	60	--	156	0
449	.995	--	--	--	--	--	--	--	--	0
450	-.061	4	1	--	--	--	--	124	--	0
451	-.037	--	--	--	--	--	--	125	--	0
452	-.055	--	--	--	--	--	--	126	--	0
453	.011	--	--	--	--	--	--	127	--	0
454	-.030	--	--	--	--	--	--	128	--	0
455	-.018	--	--	--	--	--	--	129	--	0
456	-.042	--	--	--	--	--	--	130	--	0
457	-.750	--	--	--	--	--	--	131	--	0

TOTAL NUMBER OF SUBTASKS = 15

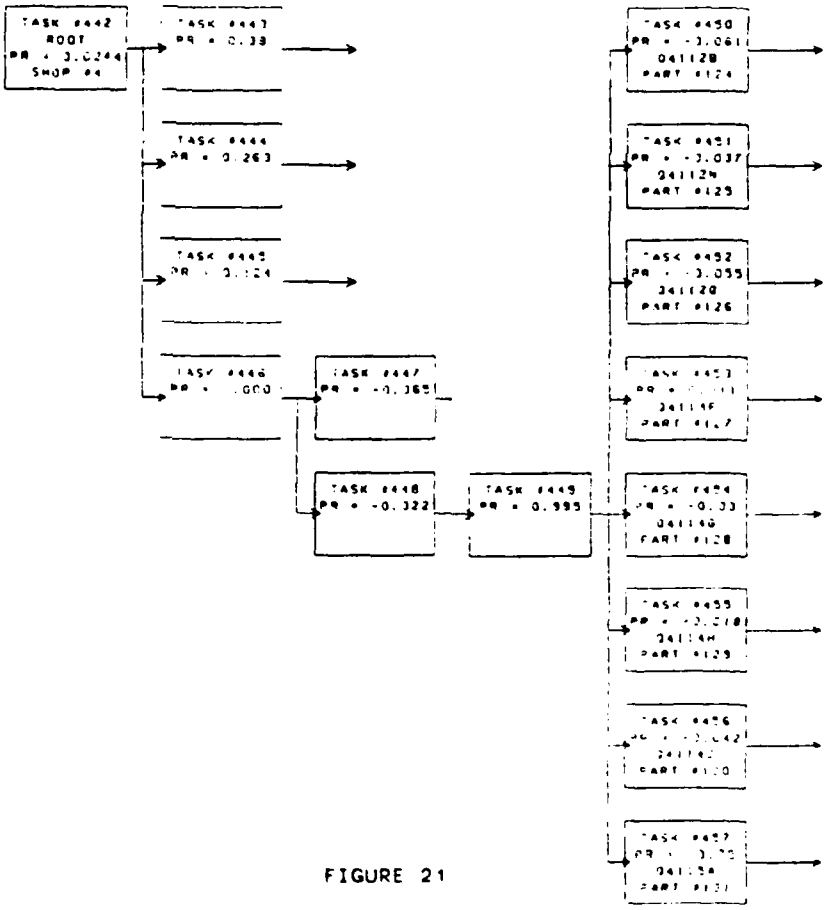

FIGURE 21

III 1 5.22 TASK #458 NETWORK - 41200 -- PRESSURIZATION -

SUBTASK	PROB	PERSONNEL TEAM 1 TYP	TEAM 1 #	TEAM 2 TYP	TEAM 2 #	AGE #1	AGE #2	PART NO.	TIME	DIS
459	.022	4	1	--	--	--	--	--	60	0
460	.217	4	1	--	--	--	--	--	60	0
461	.217	4	1	--	--	--	--	--	60	0
462	.022	9	1	--	--	--	--	--	144	0
463	.109	4	1	--	--	--	--	--	228	0
464	-.619	16	1	--	--	60	--	--	6	0
465	-.381	4	2	--	--	60	--	--	96	0
466	-.219	9	1	--	--	60	--	--	132	0
467	-.658	4	1	--	--	60	--	--	114	0
468	1.000	--	--	--	--	--	--	--	--	0
469	.061	--	--	--	--	--	--	132	--	0

TOTAL NUMBER OF SUBTASKS = 11

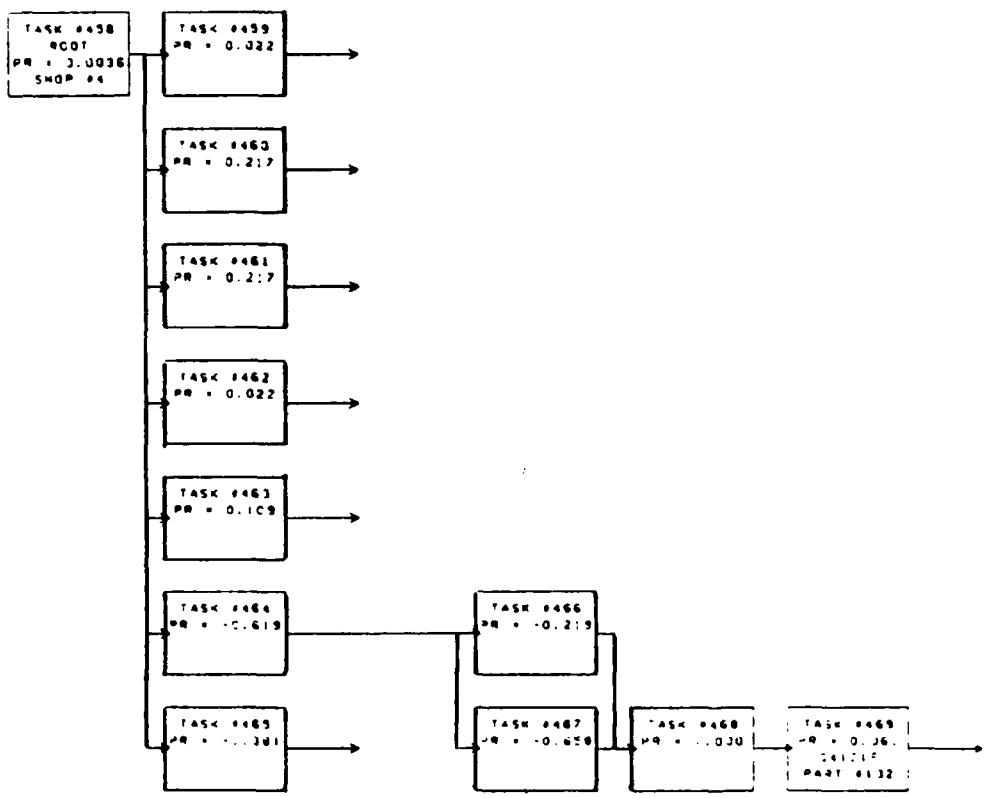

FIGURE 22

III.1.5.23 TASK #470 NETWORK - 41300 -- RAIN REMOVAL SYSTEM -

		PERSONNEL								
		TEAM 1		TEAM 2		AGE		PART		
SUBTASK	PROB	TYP	#	TYP	#	#1	#2	NO.	TIME	DIS
471	.417	4	2	--	--	--	--	--	60	0
472	.250	4	2	--	--	--	--	--	60	0
473	.250	4	2	--	--	--	--	--	186	0
474	1.000	4	2	--	--	--	--	--	132	0

TOTAL NUMBER OF SUBTASKS = 4

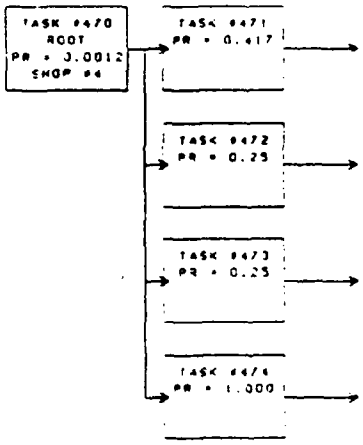

FIGURE 23

RESOURCE REQUIREMENTS
AIRCRAFT, PART AND SUPPORT EQUIPMENT REPAIR DATA

III 1.5 24 TASK #475 NETWORK - 41400 -- ANTI-G SYSTEM -

		PERSONNEL								
		TEAM 1		TEAM 2		AGE		PART		
SUBTASK	PROB	TYP	#	TYP	#	#1	#2	NO	TIME	DIS
476	167	4	1	--	--	--	--	--	60	0
477	1 000	4	1	--	--	--	--	--	138	0

TOTAL NUMBER OF SUBTASKS = 2

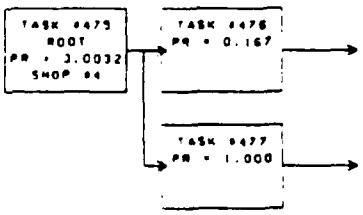

FIGURE 24

III 1 5.25 TASK #478 NETWORK - 42100 -- RELAY PANELS -

SUBTASK	PROB	PERSONNEL TEAM 1 TYP	TEAM 1 #	TEAM 2 TYP	TEAM 2 #	AGE #1	AGE #2	PART NO.	TIME	DIS
479	.014	3	2	--	--	--	--	--	60	0
480	.069	3	1	--	--	--	--	--	60	0
481	.125	8	1	--	--	--	--	--	138	0
482	.125	9	1	--	--	--	--	--	252	0
483	.014	12	2	--	--	--	--	--	138	0
484	.042	78	2	--	--	--	--	--	84	0
485	.250	3	1	--	--	--	--	--	132	0
486	-.868	9	2	--	--	60	--	--	27	0
487	-.038	78	2	--	--	60	--	--	72	0
488	-.094	3	1	--	--	60	--	--	96	0
489	-.301	9	1	--	--	60	--	--	234	0
490	-.027	12	2	--	--	60	--	--	120	0
491	-.520	3	1	--	--	60	--	--	114	0
492	.962	--	--	--	--	--	--	--	--	0
493	-.255	--	--	--	--	--	--	133	--	0
494	-.039	--	--	--	--	--	--	134	--	0
495	.434	--	--	--	--	--	--	135	--	0
496	-.157	--	--	--	--	--	--	136	--	0
497	-.235	--	--	--	--	--	--	137	--	0
498	-.040	--	--	--	--	--	--	138	--	0
499	.019	--	--	--	--	--	--	139	--	0
500	-.078	--	--	--	--	--	--	140	--	0
501	.019	--	--	--	--	--	--	141	--	0

TOTAL NUMBER OF SUBTASKS = 23

RESOURCE REQUIREMENTS
AIRCRAFT, PART AND SUPPORT EQUIPMENT REPAIR DATA

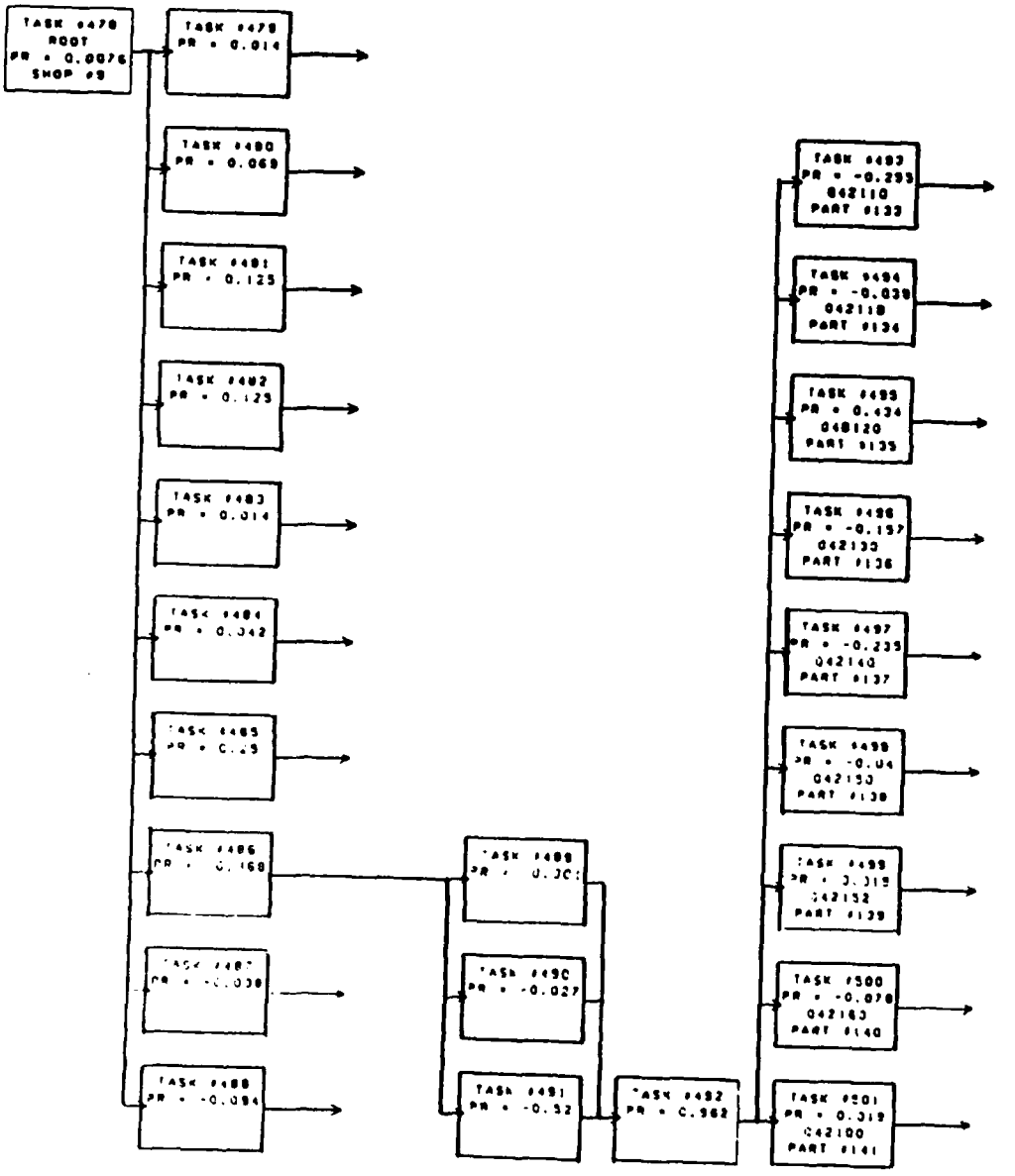

FIGURE 25

III 1.5 26 TASK #502 NETWORK - 42200 -- MAIN POWER SUPPLY, AC -

SUBTASK	PROB	PERSONNEL TEAM 1 TYP	TEAM 1 #	TEAM 2 TYP	TEAM 2 #	AGE #1	AGE #2	PART NO.	TIME	DIS
503	.214	3	2	--	--	--	--	--	60	0
504	.214	3	1	--	--	--	--	--	234	0
505	1.000	3	1	--	--	60	--	--	111	0
506	- .286	3	1	--	--	--	--	142	--	0
507	- .214	3	1	--	--	--	--	143	--	0

TOTAL NUMBER OF SUBTASKS = 5

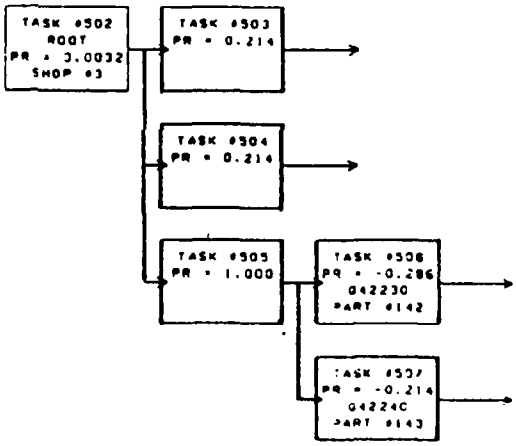

FIGURE 26

III.1 5.27 TASK #508 NETWORK - 42300 -- D C SYSTEM -

SUBTASK	PROB	PERSONNEL TEAM 1 TYP	TEAM 1 #	TEAM 2 TYP	TEAM 2 #	AGE #1	AGE #2	PART NO.	TIME	DIS
509	.136	3	1	--	--	--	--	--	30	0
510	.017	1	1	--	--	--	--	--	12	0
511	.119	3	1	--	--	--	--	--	60	0
512	.017	3	1	--	--	--	--	--	192	0
513	1.000	1	1	--	--	--	--	--	156	0
514	.136	1	1	--	--	--	--	--	156	0
515	- .966	1	1	--	--	60	--	--	3	0
516	- .034	3	1	--	--	60	--	--	102	0
517	- .091	3	1	--	--	60	--	--	174	0
518	- .874	1	1	--	--	--	--	--	156	0
519	1.000	--	--	--	--	--	--	--	--	0
520	.949	--	--	--	--	--	--	144	--	0

TOTAL NUMBER OF SUBTASKS = 12

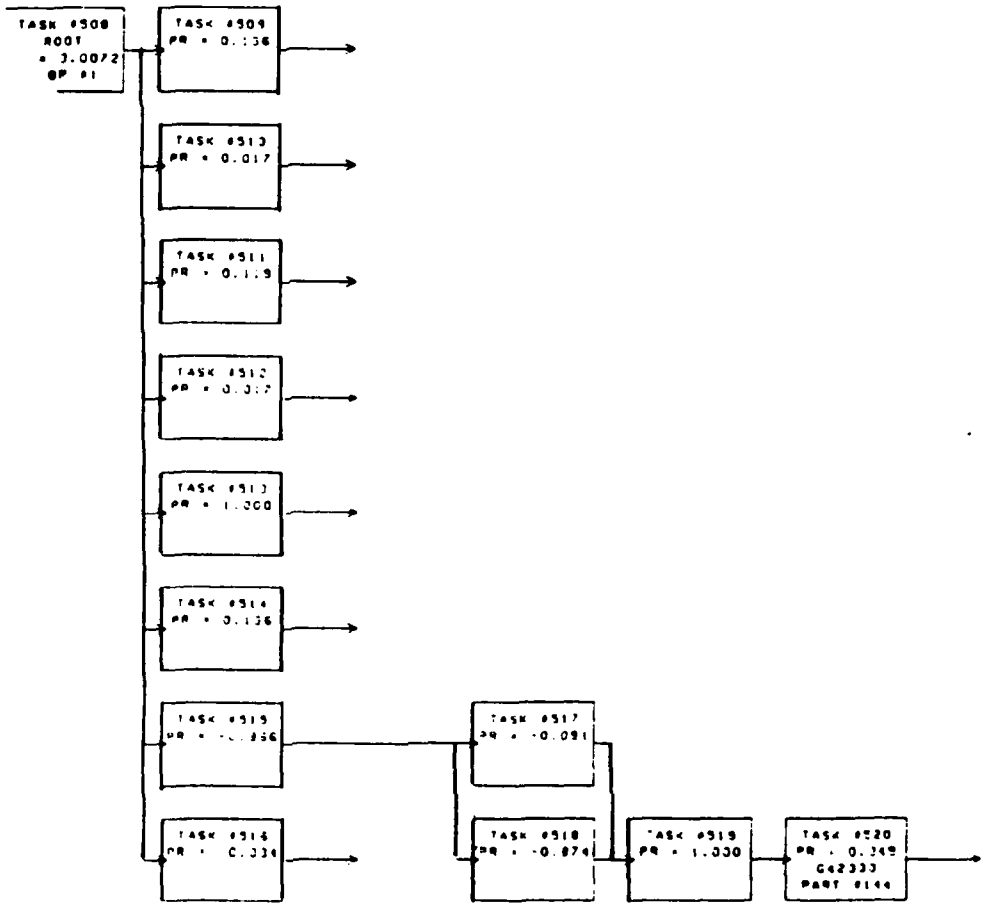

FIGURE 27

III 1.5.28 TASK #521 NETWORK - 42600 -- GENERATOR SYSTEM, 30-KVA -

SUBTASK	PROB	PERSONNEL TEAM 1 TYP	#	TEAM 2 TYP	#	AGE #1	#2	PART NO.	TIME	DIS
522	.392	3	1	--	--	--	--	--	60	0
523	.500	3	1	--	--	--	--	--	120	0
524	.081	3	1	--	--	--	--	--	132	0
525	1.000	3	1	--	--	60	--	--	114	0
526	-.441	3	1	--	--	--	--	145	--	0
527	-.065	3	1	--	--	--	--	146	--	0
528	-.052	3	1	--	--	--	--	147	--	0

TOTAL NUMBER OF SUBTASKS = 7

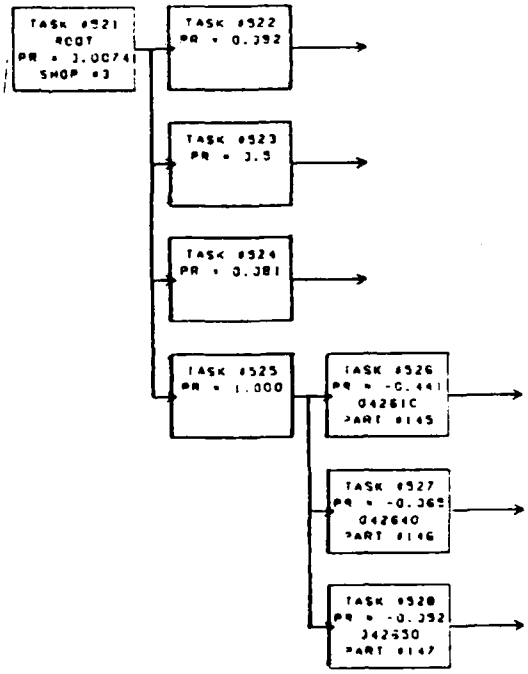

FIGURE 28

RESOURCE REQUIREMENTS
AIRCRAFT, PART AND SUPPORT EQUIPMENT REPAIR DATA

III 1 5 29 TASK #529 NETWORK - 44100 -- INTERIOR LIGHTING SYSTEM -

SUBTASK	PROB	PERSONNEL TEAM 1 TYP	TEAM 1 #	TEAM 2 TYP	TEAM 2 #	AGE #1	AGE #2	PART NO	TIME	DIS
530	.140	3	1	--	--	--	--	--	30	0
531	.194	3	1	--	--	--	--	--	60	0
532	.038	3	1	--	--	--	--	--	132	0
533	-.979	3	1	--	--	60	--	--	42	0
534	-.004	2	1	--	--	--	--	--	102	0
535	-.017	1	1	--	--	--	--	--	54	0
536	-.467	3	1	--	--	60	--	--	96	0
537	-.031	1	1	--	--	--	--	--	66	0
538	.989	--	--	--	--	--	--	--	--	0
539	-.089	--	--	--	--	--	--	148	--	0
540	-.078	--	--	--	--	--	--	149	--	0
541	-.122	--	--	--	--	--	--	150	--	0
542	.011	--	--	--	--	--	--	151	--	0
543	-.023	--	--	--	--	--	--	152	--	0

TOTAL NUMBER OF SUBTASKS = 14

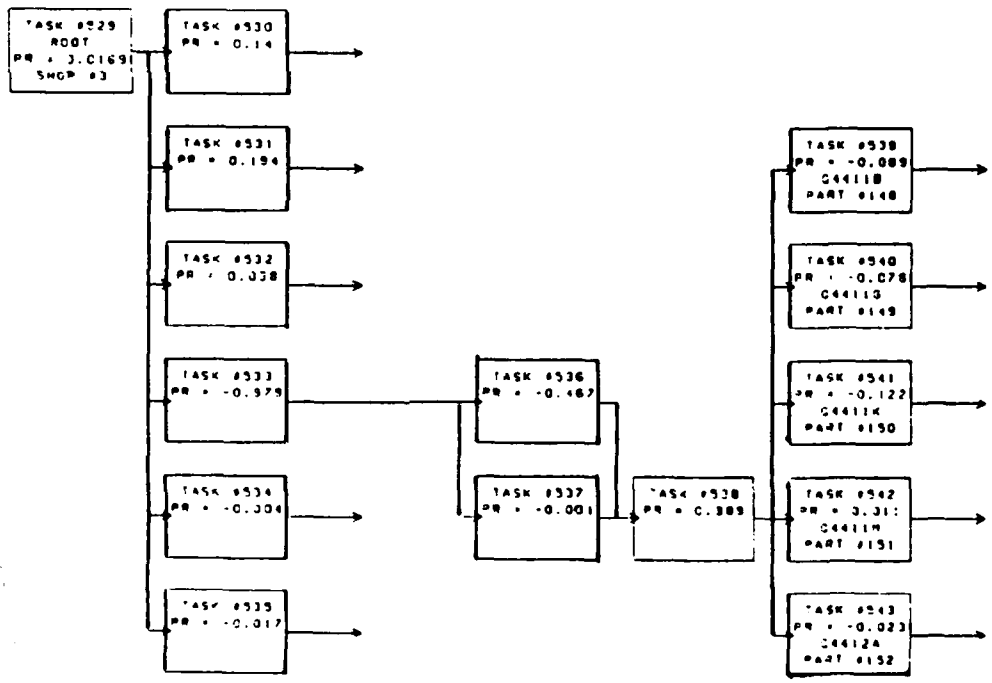

FIGURE 29

III 1 5.30 TASK #544 NETWORK - 44200 -- EXTERIOR LIGHTING SYSTEM -

SUBTASK	PROB	PERSONNEL TEAM 1 TYP	TEAM 1 #	TEAM 2 TYP	TEAM 2 #	AGE #1	AGE #2	PART NO.	TIME	DIS
545	.087	3	2	--	--	--	--	--	30	0
546	.152	3	2	--	--	--	--	--	60	0
547	.054	1	1	--	--	--	--	--	78	0
548	-.652	3	2	--	--	44	60	--	--	0
549	-.236	3	1	--	--	44	60	--	84	0
550	-.022	2	1	--	--	44	--	--	162	0
551	-.090	1	1	--	--	44	--	--	54	0
552	-.559	3	1	--	--	44	60	--	114	0
553	-.424	1	1	--	--	44	--	--	66	0
554	1.000	--	--	--	--	--	--	--	--	0
555	-.012	--	--	--	--	--	--	153	--	0
556	-.036	--	--	--	--	--	--	154	--	0

TOTAL NUMBER OF SUBTASKS = 12

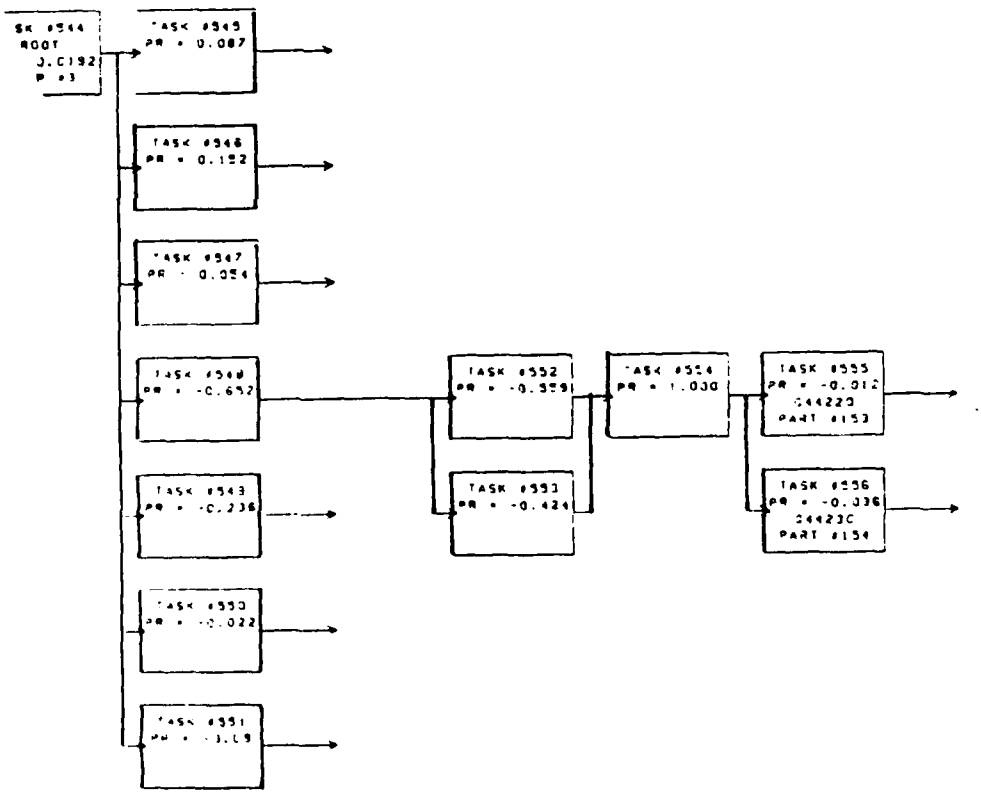

FIGURE 30

RESOURCE REQUIREMENTS
AIRCRAFT, PART AND SUPPORT EQUIPMENT REPAIR DATA

III 1 5.31 TASK #557 NETWORK - 45100 -- HYDRAULIC SYSTEMS -

SUBTASK	PROB	PERSONNEL TEAM 1 TYP	TEAM 1 #	TEAM 2 TYP	TEAM 2 #	AGE #1	AGE #2	PART NO.	TIME	DIS
558	.007	9	2	--	--	--	--	--	60	0
559	.385	6	2	--	--	--	--	--	90	0
560	.007	3	1	--	--	--	--	--	48	0
561	.142	6	2	--	--	--	--	--	90	0
562	.014	9	1	--	--	--	--	--	96	0
563	.284	6	1	--	--	--	--	--	180	0
564	-.463	6	2	--	--	2	56	--	3	0
565	-.040	9	1	--	--	60	--	--	96	0
566	-.016	3	1	--	--	60	--	--	84	0
567	-.481	6	1	--	--	2	56	--	78	0
568	-.033	9	1	--	--	60	--	--	84	0
569	-.949	6	1	--	--	2	56	--	168	0
570	1.000	--	--	--	--	--	--	--	--	0
571	.015	--	--	--	--	--	--	155	--	0
572	-.154	6	1	--	--	--	--	156	--	0
573	-.003	--	--	--	--	--	--	157	--	0
574	-.069	6	1	--	--	--	--	158	--	0
575	-.043	--	--	--	--	--	--	159	--	0
576	-.035	--	--	--	--	--	--	160	--	0
577	-.273	6	1	--	--	--	--	161	--	0
578	-.003	--	--	--	--	--	--	162	--	0
579	-.014	--	--	--	--	--	--	163	--	0
580	-.003	--	--	--	--	--	--	164	--	0

TOTAL NUMBER OF SUBTASKS = 23

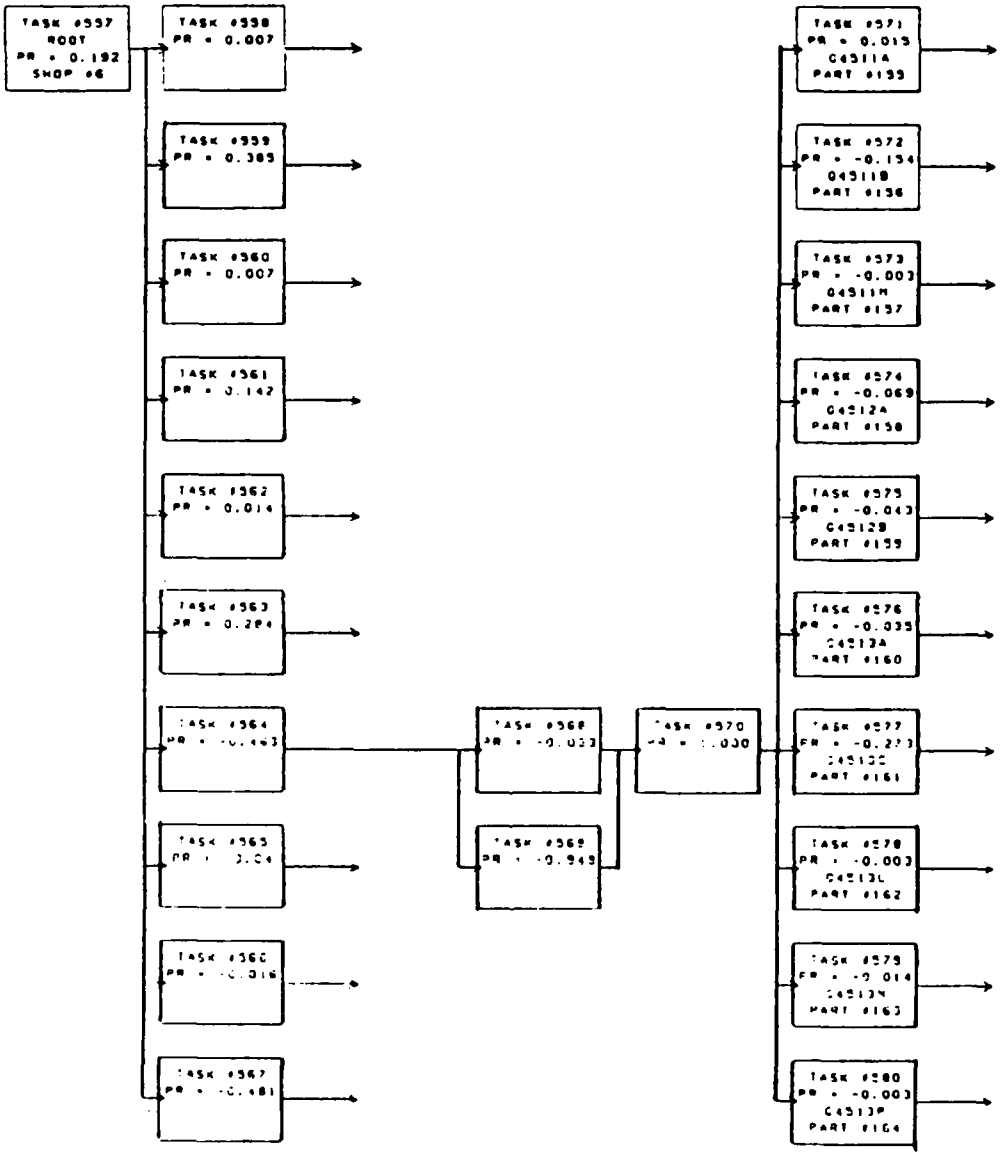
TASK #557
ROOT
PR = 0.192
SHOP #6
TASK #558
PR = 0.007
TASK #559
PR = 0.385
TASK #560
PR = 0.007
TASK #561
PR = 0.142
TASK #562
PR = 0.014
TASK #563
PR = 0.284
TASK #564
TASK #565
TASK #566
TASK #567
TASK #568
TASK #569
TASK #570
TASK #571
PR = 0.015
045111A
PART #155
TASK #572
PR = -0.154
045111B
PART #156
TASK #573
PR = -0.003
045111M
PART #157
TASK #574
PR = -0.069
045112A
PART #158
TASK #575
PR = -0.043
045112B
PART #159
TASK #576
PR = -0.035
045112A
PART #160
TASK #577
PR = -0.273
045112C
PART #161
TASK #578
PR = -0.003
045113L
PART #162
TASK #579
PR = -0.014
045113N
PART #163
TASK #580
PR = -0.003
045113P
PART #164

FIGURE 31

III 1 5.32 TASK #581 NETWORK - 45200 -- PNEUMATIC SYSTEM -

		PERSONNEL								
		TEAM 1		TEAM 2		AGE		PART		
SUBTASK	PROB	TYP	#	TYP	#	#1	#2	NO.	TIME	DIS
582	.480	6	2	--	--	--	--	--	90	0
583	.180	6	2	--	--	--	--	--	120	0
584	.020	9	1	--	--	--	--	--	96	0
585	.020	9	1	--	--	--	--	--	96	0
586	.280	6	2	--	--	--	--	--	180	0
587	-.602	6	2	--	--	50	60	--	15	0
588	-.042	9	1	--	--	60	--	--	84	0
589	-.272	6	1	--	--	52	60	--	96	0
590	-.084	1	1	--	--	--	--	--	60	0
591	-.107	9	1	--	--	60	--	--	84	0
592	-.788	6	2	--	--	56	60	--	138	0
593	.852	--	--	--	--	--	--	--	--	0
594	-.279	--	--	--	--	--	--	165	--	0
595	-.207	--	--	--	--	--	--	166	--	0
596	.037	--	--	--	--	--	--	167	--	0

TOTAL NUMBER OF SUBTASKS = 15

RESOURCE REQUIREMENTS
AIRCRAFT, PART AND SUPPORT EQUIPMENT REPAIR DATA

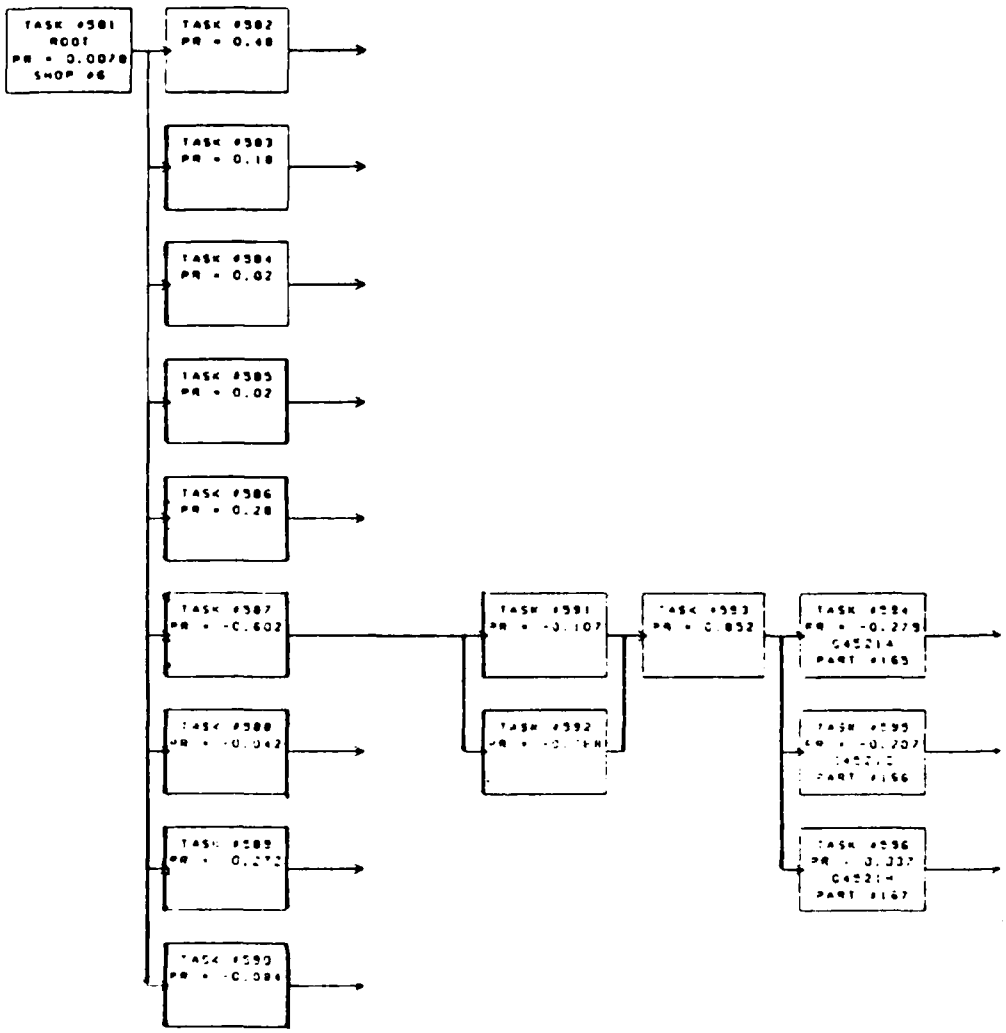

FIGURE 32

RESOURCE REQUIREMENTS
AIRCRAFT, PART AND SUPPORT EQUIPMENT REPAIR DATA

III 1 5.33 TASK #597 NETWORK - 46100 -- INTERNAL FUEL SYSTEM -

SUBTASK	PROB	PERSONNEL TEAM 1 TYP	TEAM 1 #	TEAM 2 TYP	TEAM 2 #	AGE #1	AGE #2	PART NO.	TIME	DIS
598	-.265	--	--	--	--	--	--	--	--	0
599	-.265	1	3	--	--	60	80	--	90	0
600	1.000	1	5	--	--	--	--	--	168	0
601	555	23	2	--	--	--	--	--	30	0
602	.029	3	1	--	--	--	--	--	30	0
603	.394	23	2	--	--	--	--	--	60	0
604	029	3	1	--	--	--	--	--	60	0
605	.241	23	2	--	--	--	--	--	648	0
606	- 948	23	2	--	--	60	80	--	57	0
607	-.052	3	1	--	--	--	--	--	90	0
608	1.000	1	3	--	--	--	--	--	90	0
609	1.000	23	2	--	--	--	--	--	266	0
610	.500	1	5	--	--	--	--	--	48	0

TOTAL NUMBER OF SUBTASKS = 13

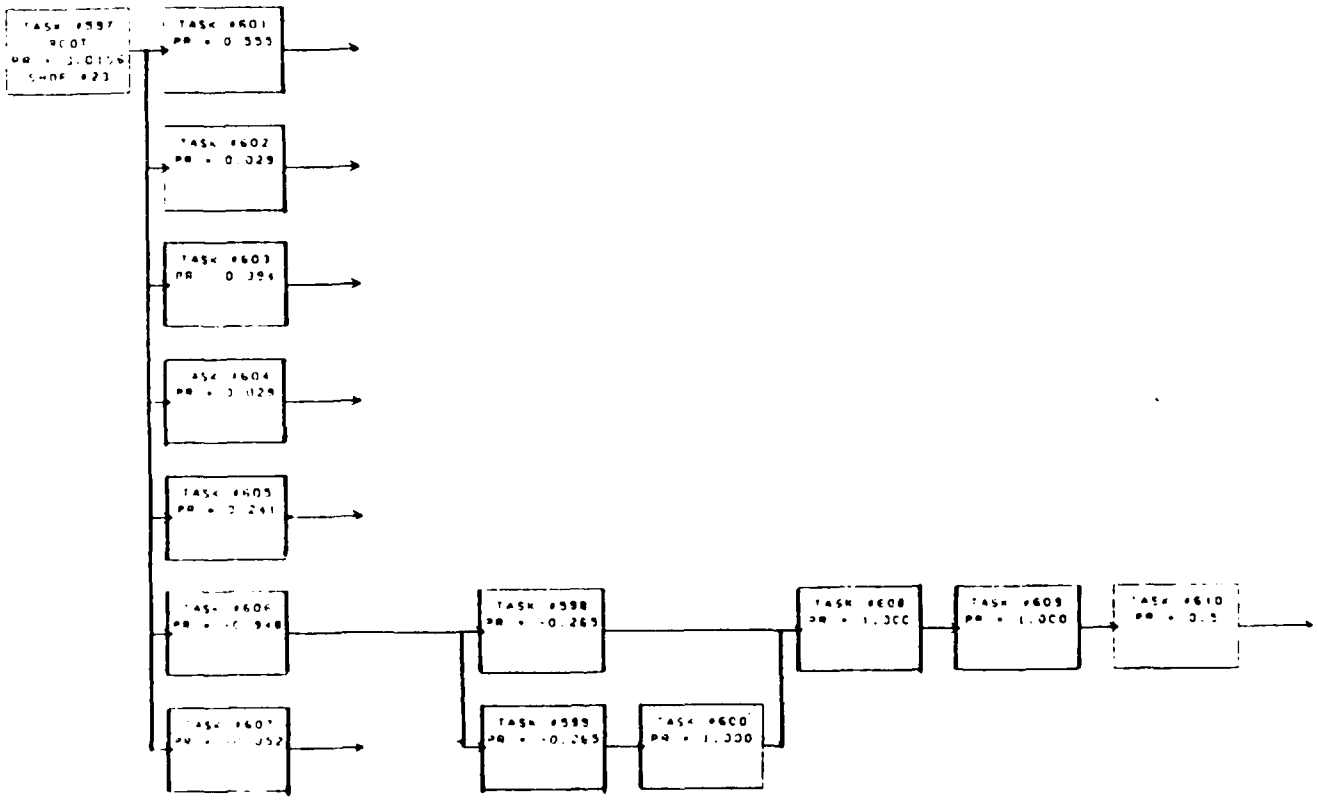

FIGURE 33

III 1.5 34 TASK #611 NETWORK - 46200 -- EXTERNAL FUEL SYSTEM -

		PERSONNEL								
		TEAM 1		TEAM 2		AGE		PART		
SUBTASK	PROB	TYP	#	TYP	#	#1	#2	NO	TIME	DIS
612	.424	23	2	--	--	--	--	--	30	0
613	.061	3	1	--	--	--	--	--	60	0
614	.348	23	2	--	--	--	--	--	90	0
615	.121	3	1	--	--	--	--	--	60	0
616	.076	23	2	--	--	--	--	--	228	0
617	1.000	1	3	--	--	--	--	--	108	0
618	1.000	1	3	--	--	--	--	--	108	0
619	.256	1	3	--	--	--	--	--	108	0
620	- .782	23	2	--	--	60	80	--	27	0
621	- .216	3	1	--	--	60	--	--	114	0
622	- .578	23	2	--	--	60	80	--	198	0
623	- .119	1	3	--	--	--	--	--	96	0
624	.917	--	--	--	--	--	--	--	--	0
625	.583	--	--	--	--	--	--	168	--	0

TOTAL NUMBER OF SUBTASKS = 14

RESOURCE REQUIREMENTS
AIRCRAFT, PART AND SUPPORT EQUIPMENT REPAIR DATA

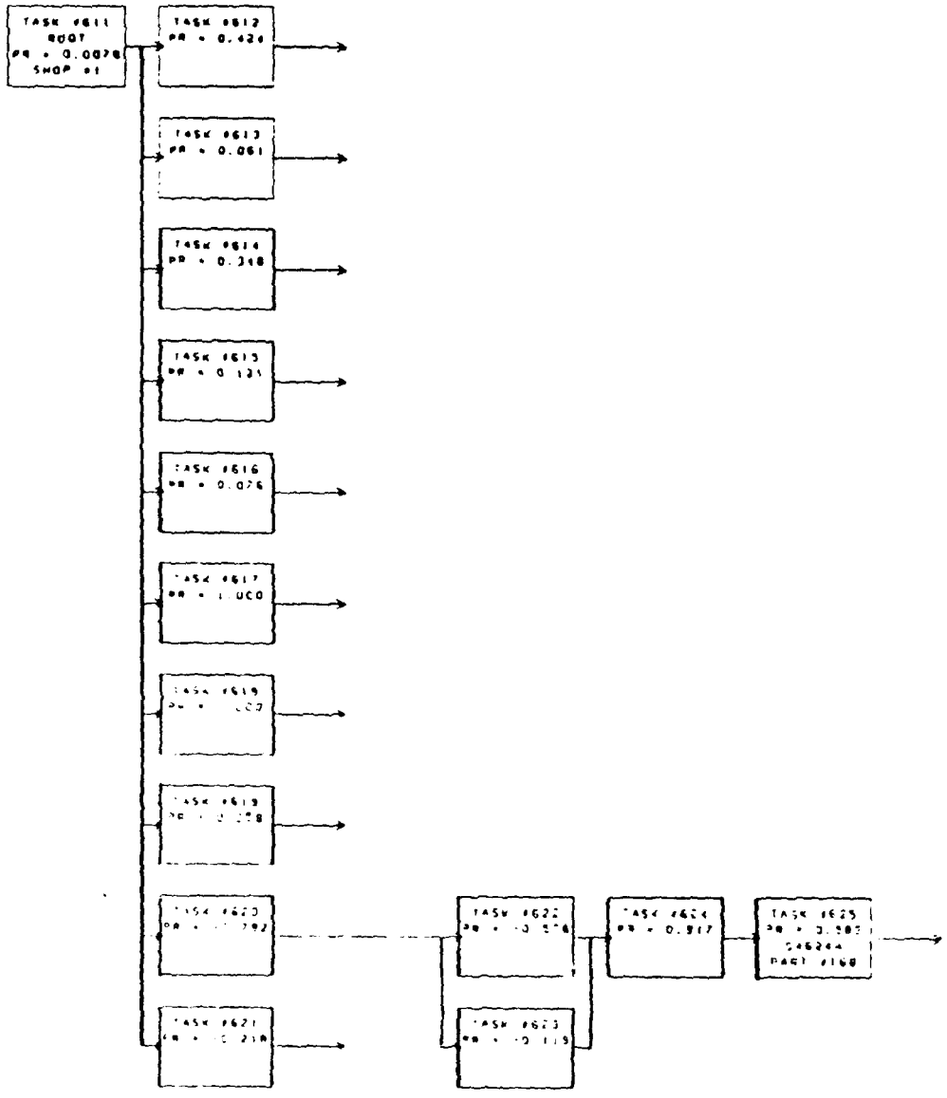

FIGURE 34

III 1 5 35 TASK #626 NETWORK - 46300 -- AIR REFUELING SYSTEM -

		PERSONNEL								
		TEAM 1		TEAM 2		AGE		PART		
SUBTASK	PROB	TYP	#	TYP	#	#1	#2	NO.	TIME	DIS
627	-.291	--	--	--	--	--	--	--	--	0
628	-.291	1	3	--	--	--	--	--	90	0
629	1.000	1	5	--	--	--	--	--	168	0
630	1.000	23	2	--	--	--	--	--	30	0
631	1.000	23	2	--	--	--	--	--	30	0
632	.265	23	2	--	--	--	--	--	30	0
633	.559	3	2	--	--	--	--	--	60	0
634	.088	6	2	--	--	--	--	--	180	0
635	.088	23	2	--	--	--	--	--	30	0
636	.353	3	2	--	--	--	--	--	90	0
637	.118	6	2	--	--	--	--	--	180	0
638	-.700	23	2	--	--	60	--	--	42	0
639	-.295	6	2	--	--	56	60	--	162	0
640	-.380	23	2	--	--	60	--	--	180	0
641	-.385	3	1	--	--	60	--	--	72	0
642	-.230	6	2	--	--	56	60	--	222	0
643	.857	--	--	--	--	--	--	--	--	0
644	.071	--	--	--	--	--	--	169	--	0
645	.167	--	--	--	--	--	--	170	--	0

TOTAL NUMBER OF SUBTASKS = 19

RESOURCE REQUIREMENTS
AIRCRAFT, PART AND SUPPORT EQUIPMENT REPAIR DATA

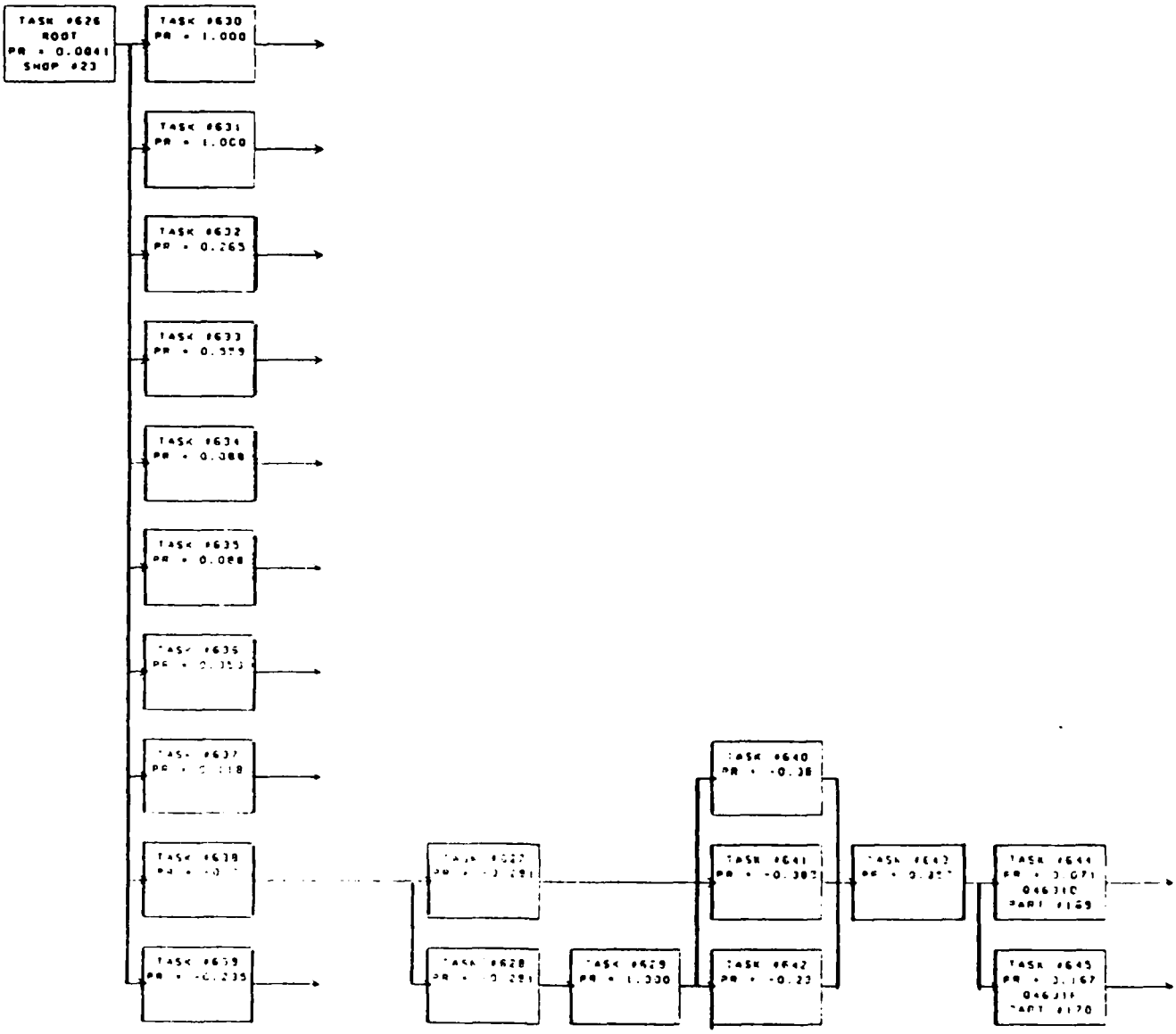

FIGURE 35

III.1.5.36 TASK #646 NETWORK - 46400 -- FUEL CONTROL, INDICATION AND WARNING SYS -

SUBTASK	PROB	PERSONNEL TEAM 1 TYP	TEAM 1 #	TEAM 2 TYP	TEAM 2 #	AGE #1	AGE #2	PART NO.	TIME	DIS
647	- 246	--	--	--	--	--	--	--	--	0
648	- 246	1	3	--	--	--	--	--	90	0
649	1.000	1	5	--	--	--	--	--	168	0
650	057	9	2	--	--	--	--	--	108	0
651	.048	23	2	--	--	--	--	--	42	0
652	.305	9	2	--	--	--	--	--	480	0
653	038	23	2	--	--	--	--	--	180	0
654	029	3	2	--	--	--	--	--	60	0
655	.076	9	2	--	--	--	--	--	132	0
656	038	23	2	--	--	--	--	--	108	0
657	-.894	9	2	--	--	60	--	--	99	0
658	-.042	23	2	--	--	56	60	--	150	0
659	- 064	3	1	--	--	--	--	--	114	0
660	- 683	9	2	--	--	60	--	--	114	0
661	- 317	23	2	--	--	56	60	--	108	0
662	870	--	--	--	--	--	--	--	--	0
663	- 171	--	--	--	--	--	--	171	--	0
664	- 244	--	--	--	--	--	--	172	--	0
665	- 024	--	--	--	--	--	--	173	--	0
666	- 124	--	--	--	--	--	--	174	--	0

TOTAL NUMBER OF SUBTASKS = 20

RESOURCE REQUIREMENTS
AIRCRAFT, PART AND SUPPORT EQUIPMENT REPAIR DATA

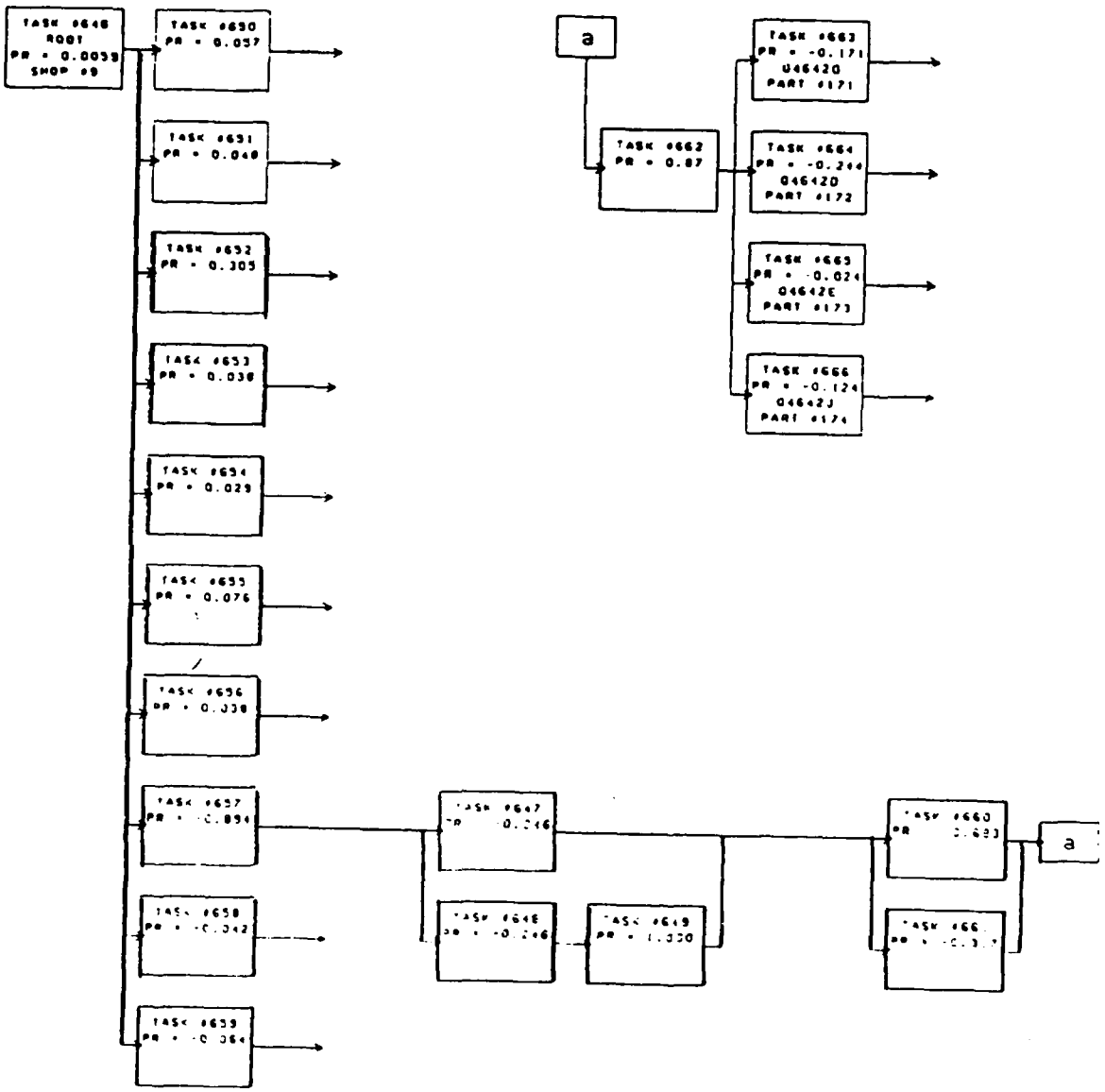

FIGURE 36

III.1.5.37 TASK #667 NETWORK - 47100 -- LIQUID OXYGEN SYSTEM -

SUBTASK	PROB	PERSONNEL TEAM 1 TYP	TEAM 1 #	TEAM 2 TYP	TEAM 2 #	AGE #1	AGE #2	PART NO.	TIME	DIS
668	.588	4	2	--	--	--	--	--	60	0
669	.235	4	2	--	--	--	--	--	60	0
670	.088	4	1	--	--	--	--	--	78	0
671	-.460	4	2	--	--	41	60	--	6	0
672	-.540	1	1	--	--	60	--	--	54	0
673	-.830	4	1	--	--	41	60	--	66	0
674	-.063	1	1	--	--	60	--	--	66	0
675	.929	--	--	--	--	--	--	--	--	0
676	.715	4	1	--	--	--	--	175	--	0
677	.071	--	--	--	--	--	--	176	--	0

TOTAL NUMBER OF SUBTASKS = 10

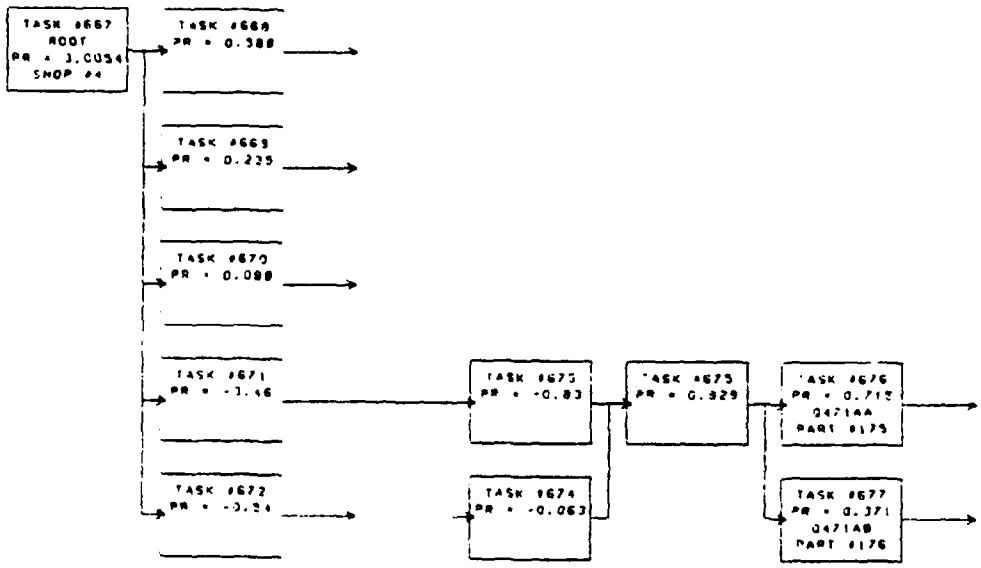

FIGURE 37

III.1.5.38 TASK #678 NETWORK - 47200 -- OXYGEN DISTRIBUTION SYSTEM -

		PERSONNEL								
		TEAM 1		TEAM 2		AGE		PART		
SUBTASK	PROB	TYP	#	TYP	#	#1	#2	NO.	TIME	DIS
679	.411	4	1	--	--	--	--	--	60	0
680	.265	4	1	--	--	--	--	--	60	0
681	.146	4	1	--	--	--	--	--	96	0
682	1.000	4	1	--	--	41	60	--	78	0
683	-.168	--	--	--	--	--	--	177	--	0
684	-.056	--	--	--	--	--	--	178	--	0
685	-.180	4	1	--	--	--	--	179	--	0
686	-.038	--	--	--	--	--	--	180	--	0

TOTAL NUMBER OF SUBTASKS = 8

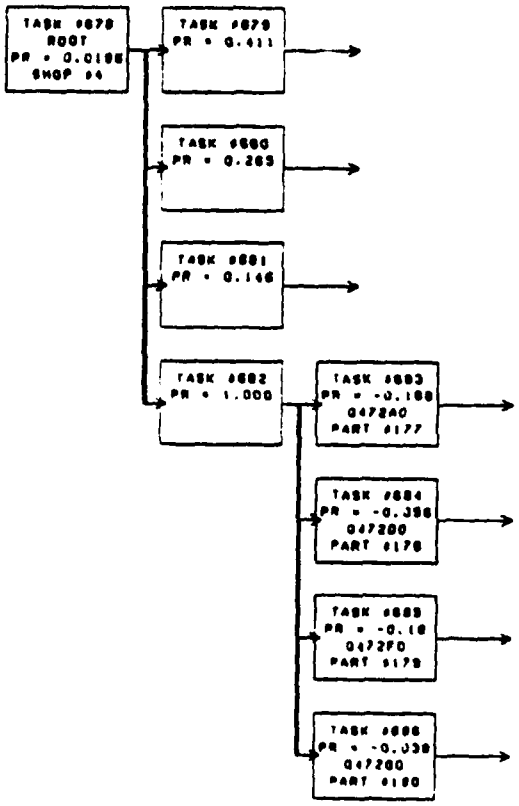

FIGURE 38

III 1.5 39 TASK #687 NETWORK - 49100 -- FIRE WARNING AND OVERHEAT SYSTEM -

SUBTASK	PROB	PERSONNEL TEAM 1 TYP	TEAM 1 #	TEAM 2 TYP	TEAM 2 #	AGE #1	AGE #2	PART NO.	TIME	DIS
688	.407	3	1	--	--	--	--	--	30	0
689	.139	3	2	--	--	--	--	--	60	0
690	.009	3	1	--	--	--	--	--	132	0
691	-.269	3	2	--	--	60	--	--	3	0
692	-.682	3	1	--	--	60	--	--	84	0
694	.963	3	1	--	--	60	--	--	114	0

TOTAL NUMBER OF SUBTASKS = 7

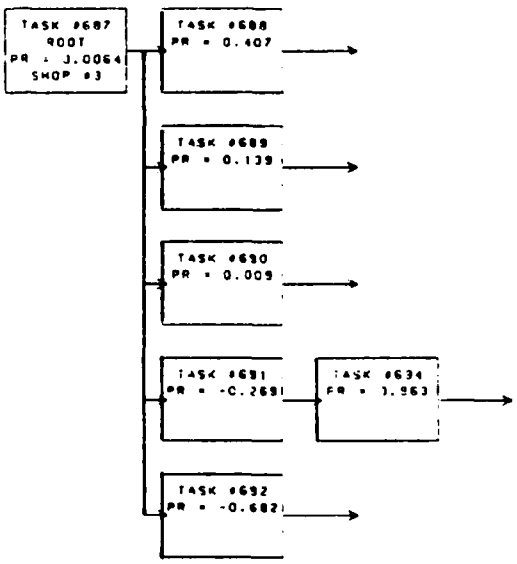

FIGURE 39

III.1.5 40 TASK #695 NETWORK - 51100 -- FLIGHT INSTRUMENT SYSTEM -

		PERSONNEL								
		TEAM 1		TEAM 2		AGE		PART		
SUBTASK	PROB	TYP	#	TYP	#	#1	#2	NO.	TIME	DIS
696	.077	9	2	--	--	--	--	--	90	0
697	.141	9	2	--	--	--	--	--	150	0
698	.258	9	2	--	--	--	--	--	132	0
699	1.000	9	2	--	--	60	--	--	117	0
700	-.042	--	--	--	--	--	--	181	--	0
701	-.214	--	--	--	--	--	--	182	--	0
702	-.008	--	--	--	--	--	--	183	--	0
703	-.047	--	--	--	--	--	--	184	--	0
704	-.023	--	--	--	--	--	--	185	--	0
705	-.015	--	--	--	--	--	--	186	--	0
706	-.124	--	--	--	--	--	--	187	--	0
707	-.019	--	--	--	--	--	--	188	--	0

TOTAL NUMBER OF SUBTASKS = 12

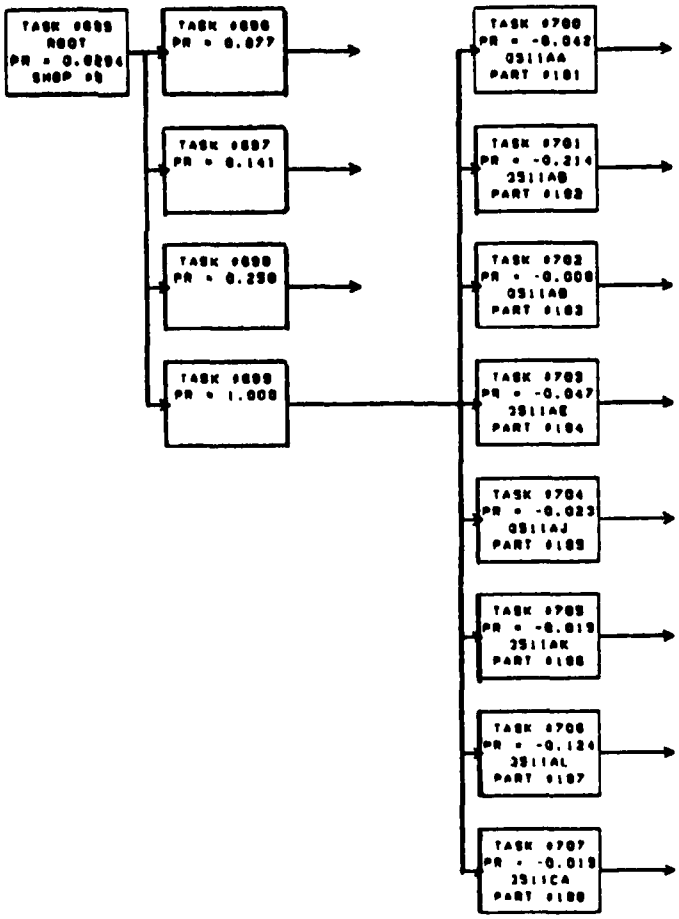

FIGURE 40

III.1.5.41 TASK #708 NETWORK - 51200 -- NAVIGATIONAL INSTRUMENT SYSTEMS -

		PERSONNEL								
		TEAM 1		TEAM 2		AGE		PART		
SUBTASK	PROB	TYP	#	TYP	#	#1	#2	NO.	TIME	DIS
709	.140	9	2	--	--	--	--	--	60	0
710	.009	2	1	--	--	--	--	--	18	0
711	.105	9	1	--	--	--	--	--	120	0
712	.175	9	1	--	--	--	--	--	132	0
713	.009	12	1	--	--	--	--	--	120	0
714	167	78	2	--	--	--	--	--	60	0
715	-.620	9	2	--	--	60	--	--	9	0
716	-.227	9	1	--	--	60	--	--	114	0
717	-.145	2	1	--	--	60	--	--	114	0
718	-.896	9	1	--	--	60	--	--	114	0
719	-.016	12	1	--	--	60	--	--	102	0
720	1.000	--	--	--	--	--	--	--	--	0
721	-.322	--	--	--	--	--	--	189	--	0
722	.032	--	--	--	--	--	--	190	--	0
723	-.196	--	--	--	--	--	--	191	--	0
724	032	--	--	--	--	--	--	192	--	0
725	-.090	--	--	--	--	--	--	193	--	0
726	-.232	--	--	--	--	--	--	194	--	0
727	-.160	--	--	--	--	--	--	195	--	0

TOTAL NUMBER OF SUBTASKS = 19

RESOURCE REQUIREMENTS
AIRCRAFT, PART AND SUPPORT EQUIPMENT REPAIR DATA

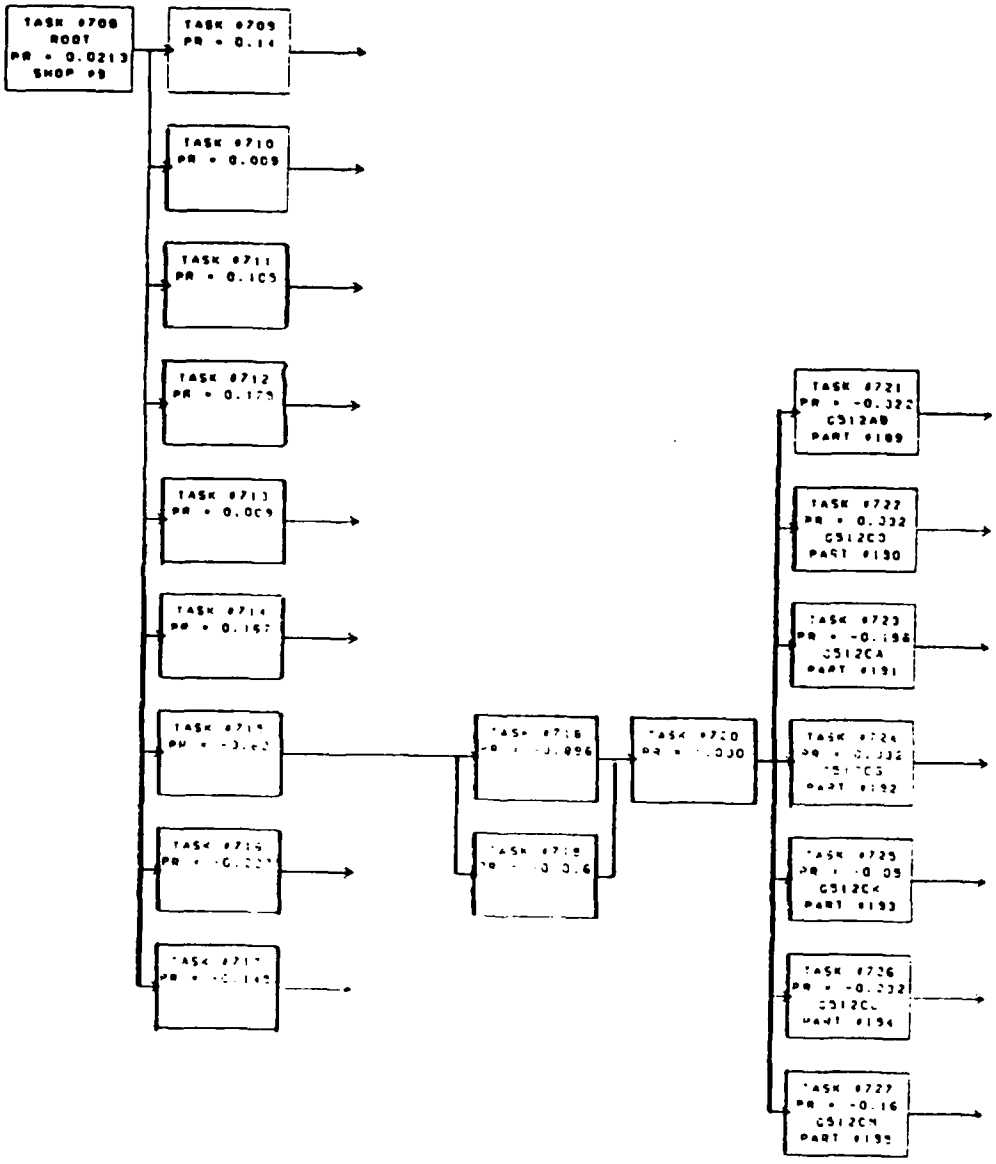

FIGURE 41

III 1.5.42 TASK #728 NETWORK - 51300 -- AIR DATA COMPUTER SYSTEM -

		PERSONNEL								
		TEAM 1		TEAM 2		AGE		PART		
SUBTASK	PROB	TYP	#	TYP	#	#1	#2	NO.	TIME	DIS
729	.133	9	2	--	--	--	--	--	102	0
730	.263	9	2	--	--	--	--	--	120	0
731	.371	9	1	--	--	--	--	--	156	0
732	-.079	9	2	--	--	51	60	--	174	0
733	-.921	9	1	--	--	60	--	--	144	0
734	-.038	--	--	--	--	--	--	196	--	0
735	-.123	--	--	--	--	--	--	197	--	0
736	-.012	--	--	--	--	--	--	198	--	0
737	-.031	--	--	--	--	--	--	199	--	0
738	-.088	--	--	--	--	--	--	200	--	0
739	-.300	9	2	--	--	--	--	201	--	0
740	.047	--	--	--	--	--	--	202	--	0
741	.028	--	--	--	--	--	--	203	--	0
742	.020	--	--	--	--	--	--	204	--	0
743	.008	--	--	--	--	--	--	205	--	0
744	.008	--	--	--	--	--	--	206	--	0
745	-.124	--	--	--	--	--	--	207	--	0

TOTAL NUMBER OF SUBTASKS = 17

RESOURCE REQUIREMENTS
AIRCRAFT, PART AND SUPPORT EQUIPMENT REPAIR DATA

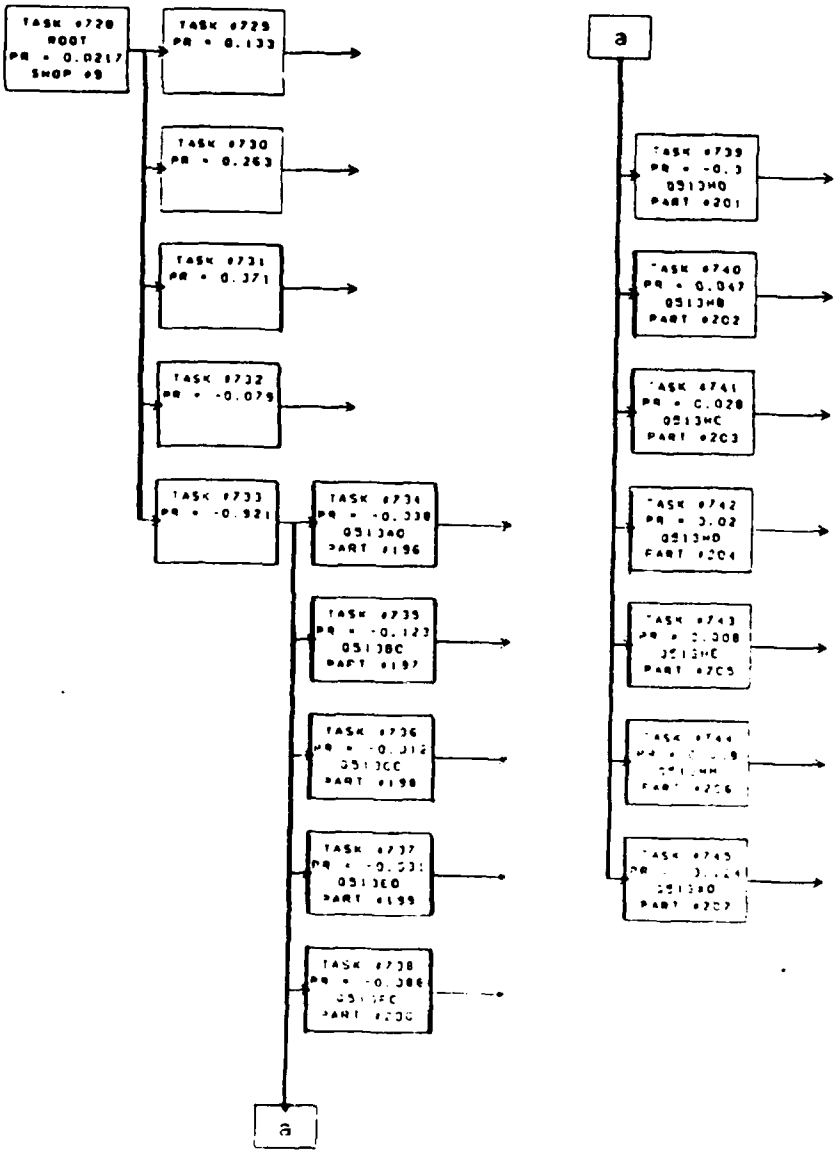

FIGURE 42

III 1.5 43 TASK #746 NETWORK - 52100 -- AUTOMATIC FLIGHT CONTROL SYSTEM -

SUBTASK	PROB	PERSONNEL TEAM 1 TYP	TEAM 1 #	TEAM 2 TYP	TEAM 2 #	AGE #1	AGE #2	PART NO	TIME	DIS
747	.960	8	2	--	--	--	--	--	240	0
748	.680	8	2	--	--	--	--	--	138	0
749	.060	8	2	--	--	--	--	--	222	0
750	1.000	8	2	--	--	60	--	--	177	0
751	.032	--	--	--	--	--	--	208	--	0
752	.160	8	2	--	--	--	--	209	--	0

TOTAL NUMBER OF SUBTASKS = 6

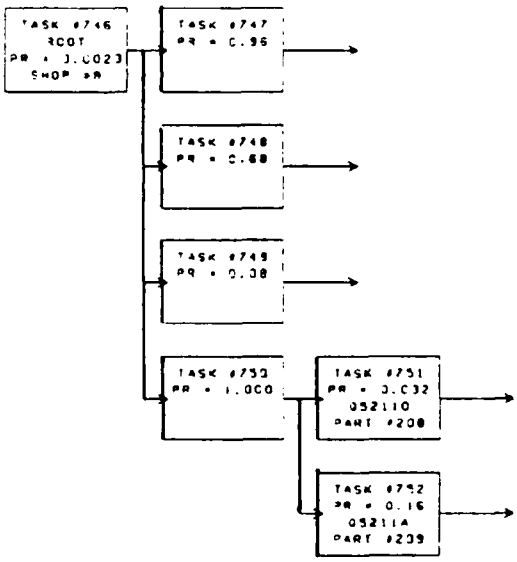

FIGURE 43

III - 5.44 TASK #753 NETWORK - 52200 -- FLIGHT CONTROL GROUP AN/ASA-32 -

SUBTASK	PROB	PERSONNEL TEAM 1 TYP	TEAM 1 #	TEAM 2 TYP	TEAM 2 #	AGE #1	AGE #2	PART NO.	TIME	DIS
754	.894	8	2	--	--	--	--	--	120	0
755	812	8	2	--	--	--	--	--	120	0
756	557	8	1	--	--	--	--	--	162	0
757	-.393	8	2	--	--	60	--	--	180	0
758	- 607	8	1	--	--	60	--	--	150	0
759	- 029	--	--	--	--	--	--	210	--	0
760	-.067	--	--	--	--	--	--	211	--	0
761	-.055	--	--	--	--	--	--	212	--	0
762	- 134	--	--	--	--	--	--	213	--	0
763	- 038	--	--	--	--	--	--	214	--	0
764	- 113	--	--	--	--	--	--	215	--	0
765	- 483	8	1	--	--	--	--	216	--	0
766	.012	--	--	--	--	--	--	217	--	0
767	-.006	--	--	--	--	--	--	218	--	0
768	018	--	--	--	--	--	--	219	--	0

TOTAL NUMBER OF SUBTASKS = 14

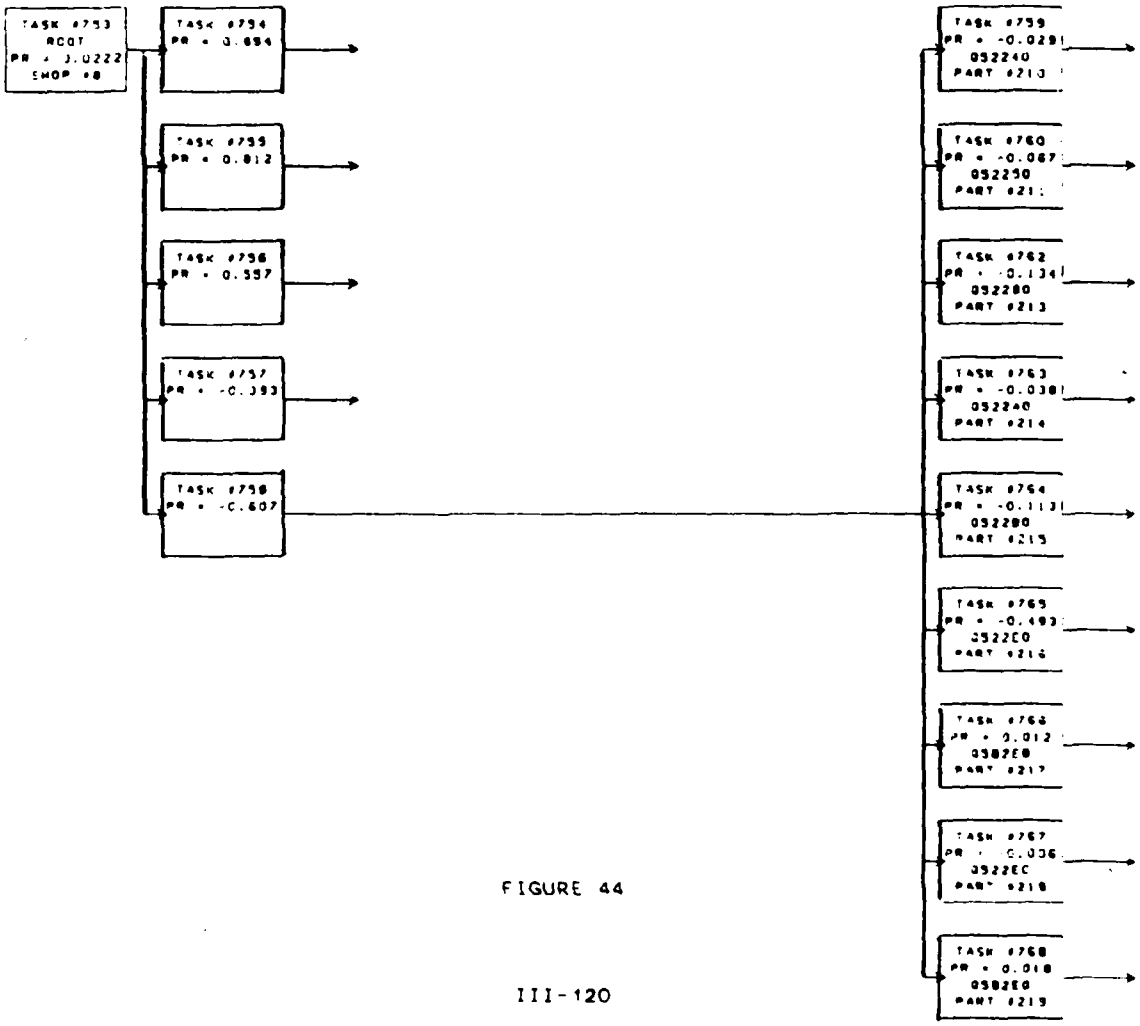

FIGURE 44

RESOURCE REQUIREMENTS
AIRCRAFT, PART AND SUPPORT EQUIPMENT REPAIR DATA

III 1 5 45 TASK #769 NETWORK - 55100 -- VELOCITY, GRAVITY, HEIGHT RECORDER SYS -

SUBTASK	PROB	PERSONNEL TEAM 1 TYP	TEAM 1 #	TEAM 2 TYP	TEAM 2 #	AGE #1	AGE #2	PART NO.	TIME	DIS
770	600	9	1	--	--	--	--	--	114	0
771	1.000	9	1	--	--	60	--	--	111	0
772	-.090	--	--	--	--	--	--	220	--	0
773	-.202	--	--	--	--	--	--	221	--	0
774	-.359	--	--	--	--	--	--	222	--	0
775	-.224	--	--	--	--	--	--	223	--	0

TOTAL NUMBER OF SUBTASKS = 6

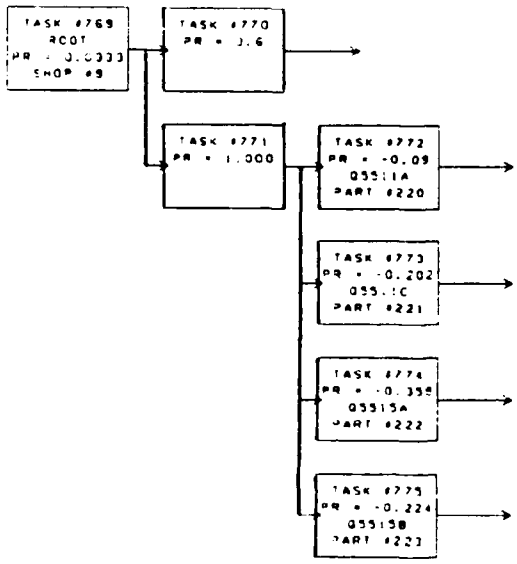

FIGURE 45

RESOURCE REQUIREMENTS
AIRCRAFT, PART AND SUPPORT EQUIPMENT REPAIR DATA

III 1.5 46 TASK #776 NETWORK - 55200 -- AIRBORNE VIDEO TAPE RECORDER -

SUBTASK	PROB	PERSONNEL TEAM 1 TYP	TEAM 1 #	TEAM 2 TYP	TEAM 2 #	AGE #1	AGE #2	PART NO.	TIME	DIS
777	1.000	20	2	--	--	60	--	--	46	0
778	1.000	20	2	--	--	--	--	--	120	0
779	-.836	--	--	--	--	--	--	224	--	0
780	-.021	--	--	--	--	--	--	225	--	0

TOTAL NUMBER OF SUBTASKS = 4

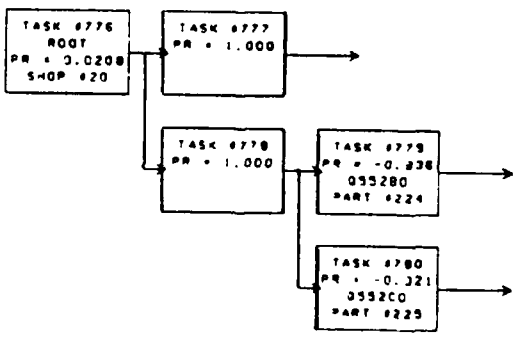

FIGURE 46

RESOURCE REQUIREMENTS
AIRCRAFT, PART AND SUPPORT EQUIPMENT REPAIR DATA

III 1 5 47 TASK #781 NETWORK - 63300 -- -

SUBTASK	PROB	PERSONNEL TEAM 1 TYP	TEAM 1 #	TEAM 2 TYP	TEAM 2 #	AGE #1	AGE #2	PART NO.	TIME	DIS
782	405	12	2	--	--	--	--	--	30	0
783	304	12	2	--	--	--	--	--	60	0
784	.207	12	1	--	--	--	--	--	120	0
785	-.266	12	2	--	--	60	--	--	90	0
786	-.734	12	1	--	--	60	--	--	99	0
787	-.026	--	--	--	--	--	--	226	--	0
788	-.402	12	1	--	--	--	--	227	--	0
789	.035	--	--	--	--	--	--	228	--	0
790	.006	--	--	--	--	--	--	229	--	0
791	.023	--	--	--	--	--	--	230	--	0
792	.035	--	--	--	--	--	--	231	--	0
793	-.114	--	--	--	--	--	--	232	--	0
794	.023	--	--	--	--	--	--	233	--	0
795	.006	--	--	--	--	--	--	234	--	0

TOTAL NUMBER OF SUBTASKS = 14

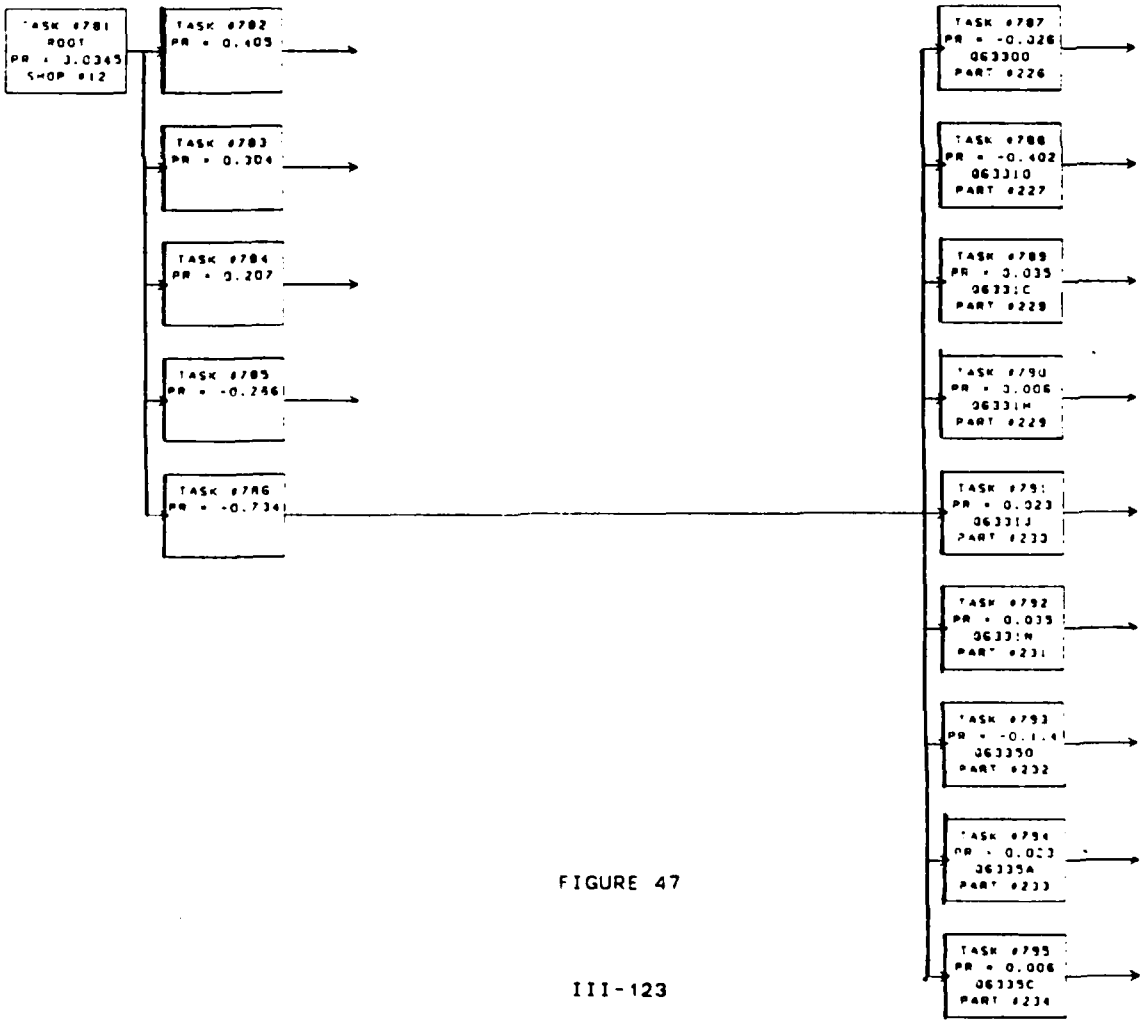

FIGURE 47

III.1.5.48 TASK #796 NETWORK - 71300 -- ILS/VOR/MB SYSTEM, AN/ARN-127 -

		PERSONNEL								
		TEAM 1		TEAM 2		AGE		PART		
SUBTASK	PROB	TYP	#	TYP	#	#1	#2	NO.	TIME	DIS
797	.126	13	2	--	--	--	--	--	30	0
798	.163	13	2	--	--	--	--	--	60	0
799	.296	13	1	--	--	--	--	--	126	0
800	.030	78	2	--	--	--	--	--	78	0
801	-.126	13	2	--	--	60	--	--	126	0
802	-.874	13	1	--	--	60	--	--	102	0
803	-.295	--	--	--	--	--	--	235	--	0
804	-.108	--	--	--	--	--	--	236	--	0
805	-.147	--	--	--	--	--	--	237	--	0

TOTAL NUMBER OF SUBTASKS = 9

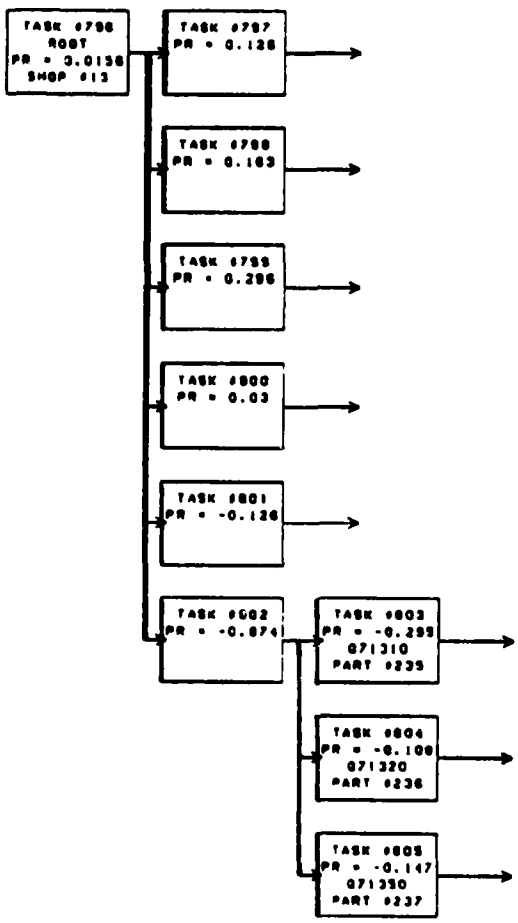

FIGURE 48

III 1.5.49 TASK #806 NETWORK - 71B00 -- NAVIGATIONAL SYSTEM AN/ASN-46A -

		PERSONNEL								
		TEAM 1		TEAM 2		AGE		PART		
SUBTASK	PROB	TYP	#	TYP	#	#1	#2	NO.	TIME	DIS
807	.177	78	2	--	--	--	--	--	18	0
808	.090	78	2	--	--	--	--	--	18	0
809	.588	78	2	--	--	--	--	--	72	0
810	1.000	78	2	--	--	60	--	--	60	0
811	-.336	78	2	--	--	--	--	238	--	0
812	-.326	--	--	--	--	--	--	239	--	0
813	.029	--	--	--	--	--	--	240	--	0
814	.011	--	--	--	--	--	--	241	--	0
815	.007	--	--	--	--	--	--	242	--	0
816	-.067	--	--	--	--	--	--	243	--	0

TOTAL NUMBER OF SUBTASKS = 10

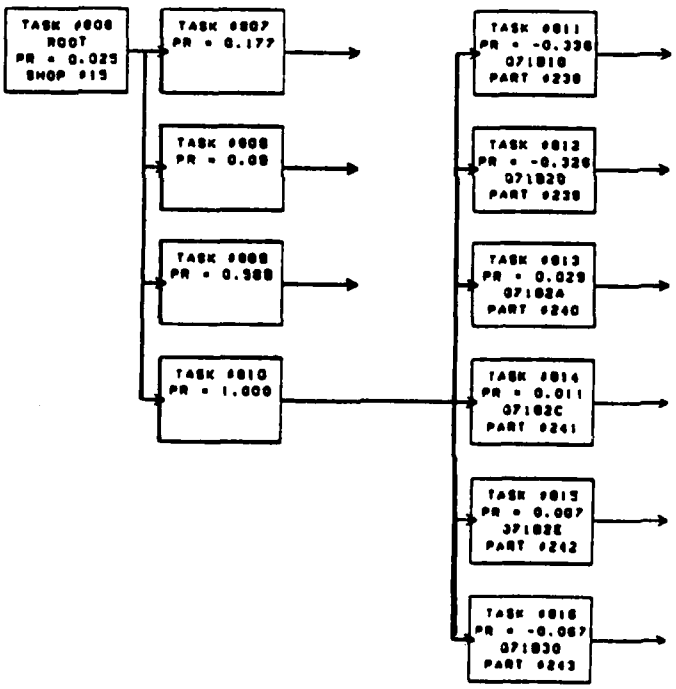

FIGURE 49

III.1.5.50 TASK #817 NETWORK - 71H00 -- INERTIAL NAVIGATION SYSTEM -

SUBTASK	PROB	PERSONNEL TEAM 1 TYP	TEAM 1 #	TEAM 2 TYP	TEAM 2 #	AGE #1	AGE #2	PART NO.	TIME	DIS
818	.197	76	2	--	--	--	--	--	16	0
819	.141	78	2	--	--	--	--	--	30	0
820	.368	76	2	--	--	--	--	--	84	0
821	1.000	76	2	--	--	60	--	--	63	0
822	-.005	--	--	--	--	--	--	244	--	0
823	-.152	76	2	--	--	--	--	245	--	0
824	.052	--	--	--	--	--	--	246	--	0
825	.015	--	--	--	--	--	--	247	--	0
826	.018	--	--	--	--	--	--	248	--	0
827	.015	--	--	--	--	--	--	249	--	0
828	.007	--	--	--	--	--	--	250	--	0
829	.016	--	--	--	--	--	--	251	--	0
830	.036	--	--	--	--	--	--	252	--	0
833	-.116	76	2	--	--	--	--	254	--	0
834	.012	--	--	--	--	--	--	255	--	0
835	-.106	--	--	--	--	--	--	256	--	0
836	.004	--	--	--	--	--	--	257	--	0

TOTAL NUMBER OF SUBTASKS = 16

RESOURCE REQUIREMENTS
AIRCRAFT, PART AND SUPPORT EQUIPMENT REPAIR DATA

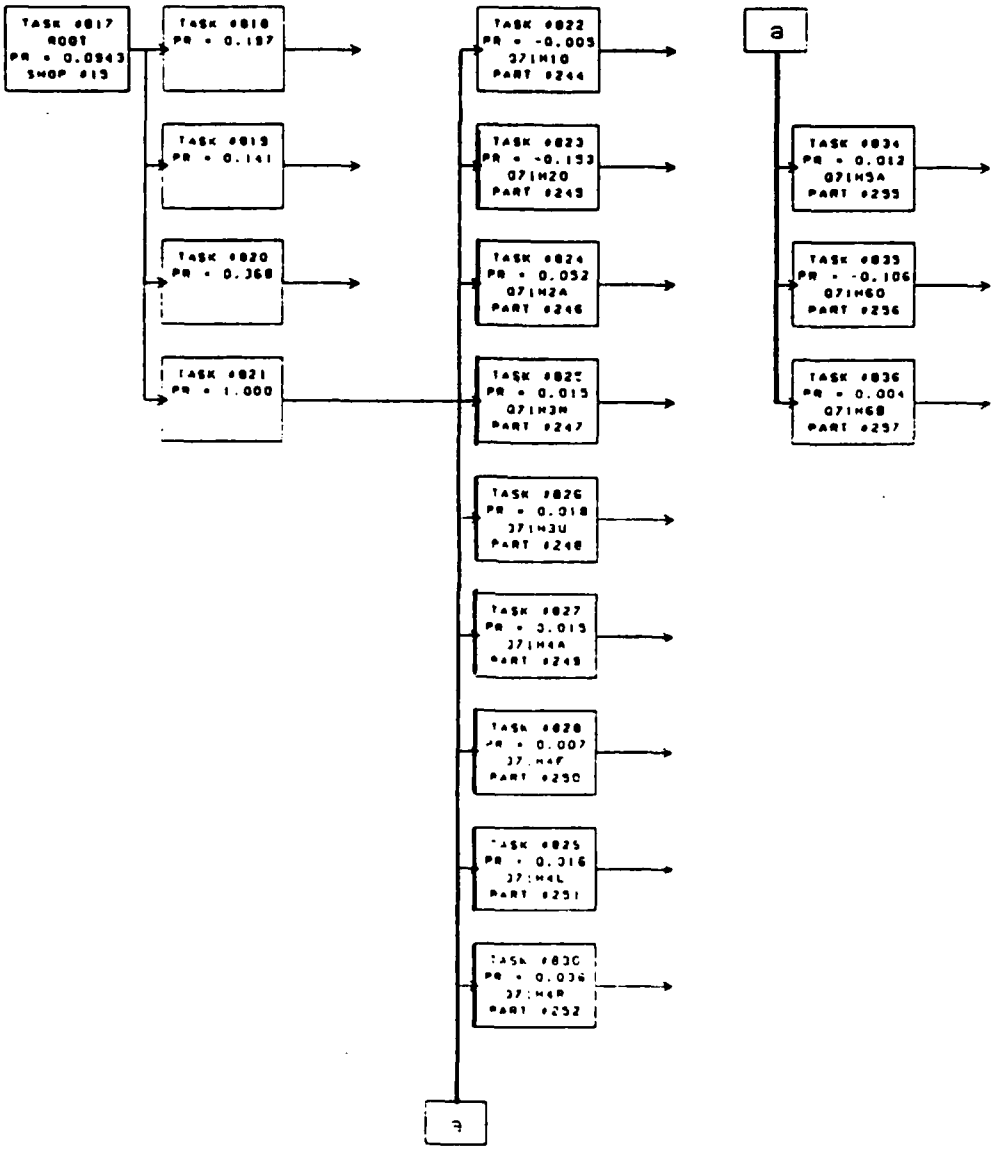

FIGURE 50

III.1.5.51 TASK #837 NETWORK - 71L00 -- INTEGRATED ELECTRONIC CENTRAL -

SUBTASK	PROB	PERSONNEL TEAM 1 TYP	TEAM 1 #	TEAM 2 TYP	TEAM 2 #	AGE #1	AGE #2	PART NO.	TIME	DIS
838	.033	12	2	--	--	--	--	--	30	0
839	.079	13	2	--	--	--	--	--	60	0
840	.025	12	2	--	--	--	--	--	90	0
841	.067	13	2	--	--	--	--	--	78	0
842	.102	12	1	--	--	--	--	--	138	0
843	.228	13	1	--	--	--	--	--	126	0
844	.050	78	2	--	--	--	--	--	72	0
845	-.666	12	2	--	--	60	--	--	6	0
846	-.154	13	2	--	--	60	--	--	126	0
847	-.007	9	1	--	--	60	--	--	114	0
848	-.173	12	1	--	--	60	--	--	102	0
849	-.030	9	1	--	--	60	--	--	114	0
850	-.338	12	1	--	--	60	--	--	120	0
851	-.487	13	1	--	--	60	--	--	126	0
852	-.070	78	2	--	--	60	--	--	60	0
853	1.000	--	--	--	--	--	--	--	--	0
854	-.183	13	1	--	--	--	--	258	--	0
855	-.083	--	--	--	--	--	--	259	--	0
856	-.010	--	--	--	--	--	--	260	--	0
857	-.038	--	--	--	--	--	--	261	--	0
858	.010	--	--	--	--	--	--	262	--	0
859	-.032	--	--	--	--	--	--	263	--	0

TOTAL NUMBER OF SUBTASKS = 22

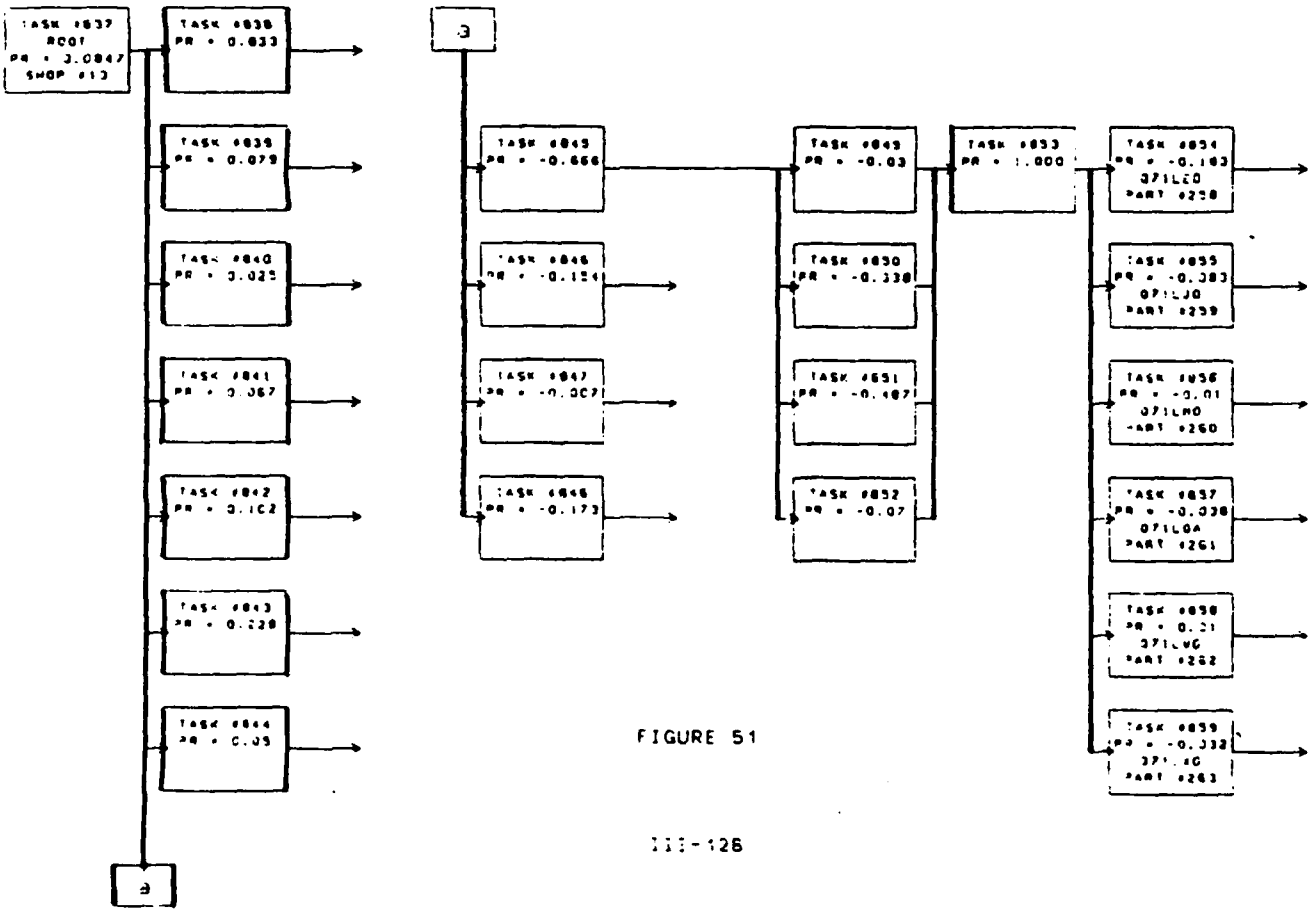

FIGURE 51

III.1.5.52 TASK #860 NETWORK - 71M00 -- INTEGRATED ELECTRONIC CENTRAL AN/ASQ-19A -

		PERSONNEL								
		TEAM 1		TEAM 2		AGE		PART		
SUBTASK	PROB	TYP	#	TYP	#	#1	#2	NO.	TIME	DIS
861	.041	12	2	--	--	--	--	--	60	0
862	.017	13	2	--	--	--	--	--	42	0
863	.035	12	2	--	--	--	--	--	60	0
864	.013	13	2	--	--	--	--	--	60	0
865	.158	12	1	--	--	--	--	--	108	0
866	.102	13	1	--	--	--	--	--	96	0
867	-.534	12	2	--	--	60	--	--	9	0
868	-.012	13	2	--	--	60	--	--	126	0
869	-.328	12	1	--	--	60	--	--	90	0
870	-.126	13	1	--	--	60	--	--	96	0
871	-.537	12	1	--	--	60	--	--	90	0
872	-.362	13	1	--	--	60	--	--	96	0
873	1.000	--	--	--	--	--	--	--	--	0
874	-.083	--	--	--	--	--	--	264	--	0
875	-.541	12	1	--	--	--	--	265	--	0
876	-.165	--	--	--	--	--	--	266	--	0
877	-.211	--	--	--	--	--	--	267	--	0

TOTAL NUMBER OF SUBTASKS = 17

RESOURCE REQUIREMENTS
AIRCRAFT, PART AND SUPPORT EQUIPMENT REPAIR DATA

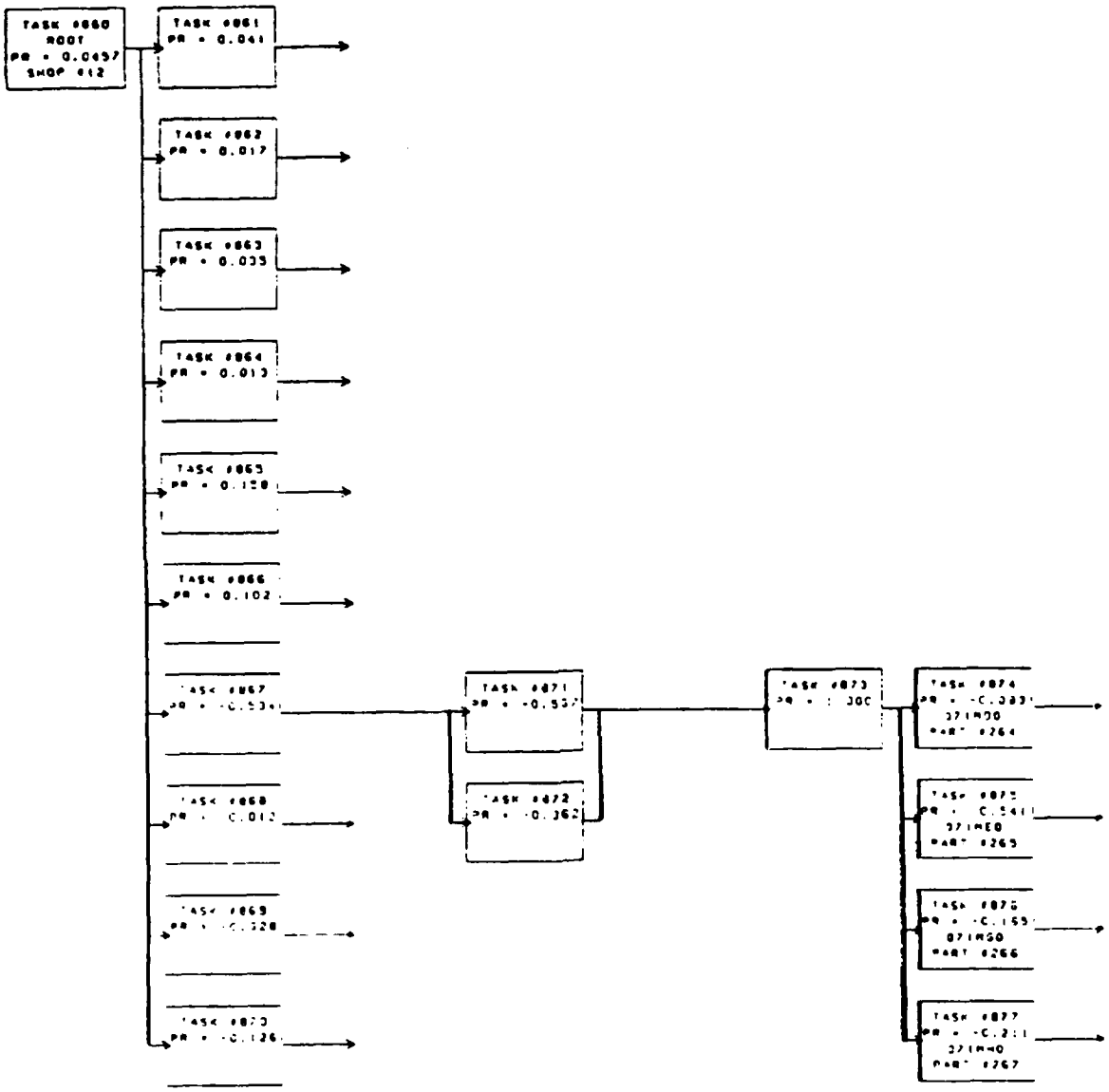

FIGURE 52

III.1.5.53 TASK #878 NETWORK - 71ROC -- RADIO EQUIPMENT, SECURE VOICE -

		PERSONNEL								
		TEAM 1		TEAM 2		AGE		PART		
SUBTASK	PROB	TYP	#	TYP	#	#1	#2	NO.	TIME	DIS
879	.125	12	1	--	--	--	--	--	12	0
880	1.000	12	1	--	--	60	--	--	60	0

TOTAL NUMBER OF SUBTASKS = 2

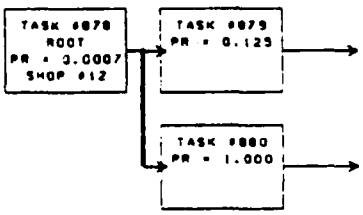

FIGURE 53

III.1.5.54 TASK #881 NETWORK - 71500 -- INTERROGATOR SET AN/APX-76 -

SUBTASK	PROB	PERSONNEL TEAM 1 TYP	TEAM 1 #	TEAM 2 TYP	TEAM 2 #	AGE #1	AGE #2	PART NO.	TIME	DIS
882	.145	13	2	--	--	--	--	--	60	0
883	.179	13	2	--	--	--	--	--	90	0
884	.396	13	1	--	--	--	--	--	126	0
885	-.209	13	2	--	--	--	--	--	144	0
886	-.791	13	1	--	--	--	--	--	117	0
887	-.020	--	--	--	--	--	--	268	--	0
888	-.236	--	--	--	--	--	--	269	--	0
889	.019	--	--	--	--	--	--	270	--	0
890	-.220	--	--	--	--	--	--	271	--	0
891	-.208	--	--	--	--	--	--	272	--	0

TOTAL NUMBER OF SUBTASKS = 10

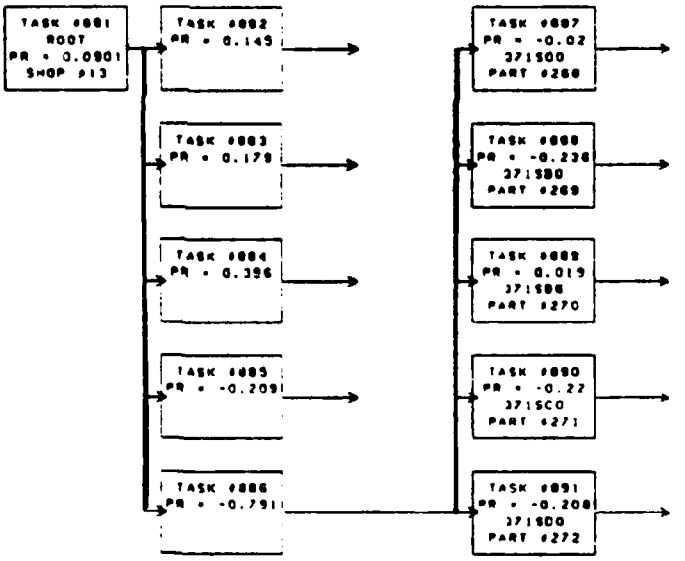

FIGURE 54

III 1 5.55 TASK #892 NETWORK - 71TOO -- MARK XII IFF EQUIPMENT -

SUBTASK	PROB	PERSONNEL TEAM 1 TYP	TEAM 1 #	TEAM 2 TYP	TEAM 2 #	AGE #1	AGE #2	PART NO.	TIME	DIS
893	.033	13	2	--	--	--	--	--	60	0
894	.100	13	1	--	--	--	--	--	108	0
895	-.035	13	2	--	--	60	--	--	156	0
896	-.960	13	1	--	--	60	--	--	111	0

TOTAL NUMBER OF SUBTASKS = 4

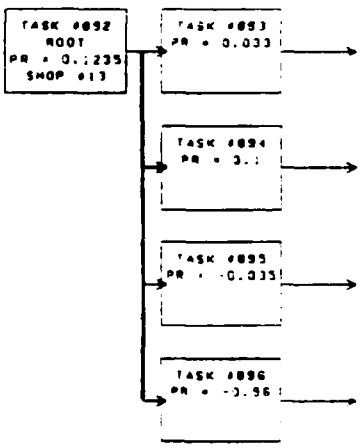

FIGURE 55

III 1.5.56 TASK #898 NETWORK - 71VCC -- INTERROGATOR SET AN/APX-81 -

		PERSONNEL								
		TEAM 1		TEAM 2		AGE		PART		
SUBTASK	PROB	TYP	#	TYP	#	#1	#2	NO.	TIME	DIS
899	037	13	1	--	--	--	--	--	76	0
900	370	13	1	--	--	--	--	--	114	0
901	1.000	13	1	--	--	60	--	--	99	0
902	667	--	--	--	--	--	--	273	--	0

TOTAL NUMBER OF SUBTASKS = 4

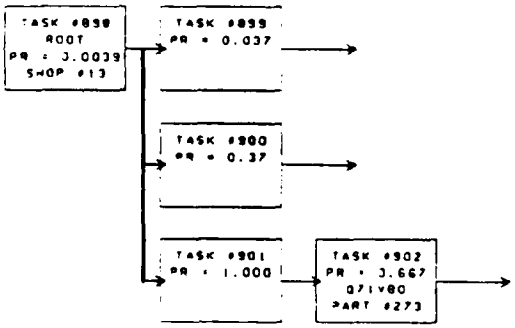

FIGURE 56

III 1.5.57 TASK #903 NETWORK - 71Z00 -- AN/ARN-118 TACAN SYSTEM -

SUBTASK	PROB	PERSONNEL TEAM 1 TYP	TEAM 1 #	TEAM 2 TYP	TEAM 2 #	AGE #1	AGE #2	PART NO.	TIME	DIS
904	.197	13	2	--	--	--	--	--	60	0
905	.213	13	2	--	--	--	--	--	60	0
906	.303	13	1	--	--	--	--	--	108	0
907	-.187	13	2	--	--	60	--	--	126	0
908	-.813	13	1	--	--	60	--	--	96	0
909	-.129	--	--	--	--	--	--	274	--	0
910	-.052	13	1	--	--	--	--	275	--	0
911	-.090	--	--	--	--	--	--	276	--	0
912	-.239	--	--	--	--	--	--	277	--	0
913	-.045	13	1	--	--	--	--	278	--	0

TOTAL NUMBER OF SUBTASKS = 10

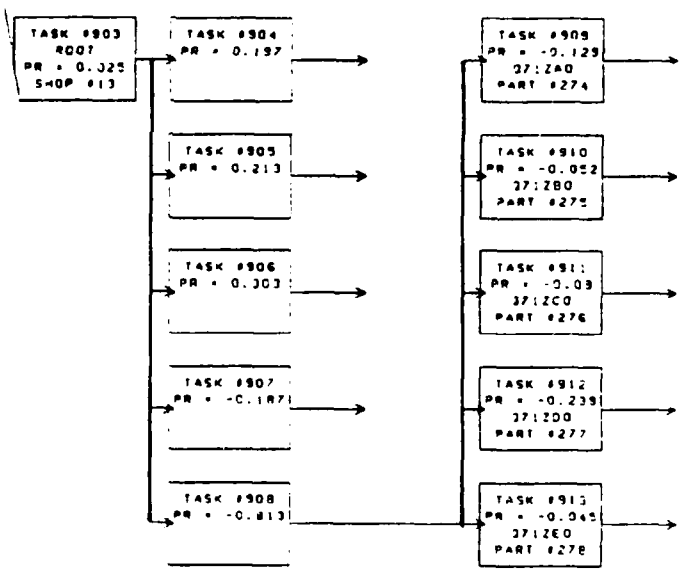

FIGURE 57

III.1.5.58 TASK #914 NETWORK - 72300 -- RADAR ALTIMETER, AN/APN-155 -

		PERSONNEL								
		TEAM 1		TEAM 2		AGE		PART		
SUBTASK	PROB	TYP	#	TYP	#	#1	#2	NO.	TIME	DIS
915	.148	13	2	--	--	--	--	--	30	0
916	.122	13	2	--	--	--	--	--	60	0
917	.429	13	1	--	--	--	--	--	126	0
918	-.076	13	2	--	--	60	--	--	126	0
919	-.924	13	1	--	--	60	--	--	126	0
920	-.004	--	--	--	--	--	--	279	--	0
921	-.473	--	--	--	--	--	--	280	--	0
922	.012	--	--	--	--	--	--	281	--	0
923	-.228	--	--	--	--	--	--	282	--	0
924	-.046	--	--	--	--	--	--	283	--	0
925	-.054	--	--	--	--	--	--	284	--	0

TOTAL NUMBER OF SUBTASKS = 11

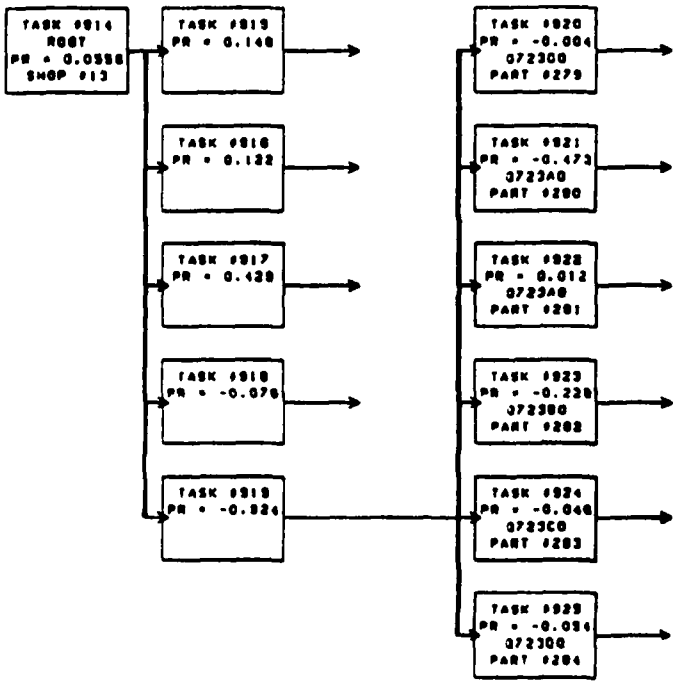

FIGURE 58

III 1.5.59 TASK #926 NETWORK - 72500 -- SST-181X RADAR TRANSPONDER SYSTEM -

		PERSONNEL								
		TEAM 1		TEAM 2		AGE		PART		
SUBTASK	PROB	TYP	#	TYP	#	#1	#2	NO.	TIME	DIS
927	.765	13	2	--	--	--	--	--	48	0
928	.294	13	2	--	--	--	--	--	60	0
929	-.353	13	2	--	--	60	--	--	90	0
930	-.647	13	1	--	--	60	--	--	150	0
931	.667	--	--	--	--	--	--	285	--	0

TOTAL NUMBER OF SUBTASKS = 5

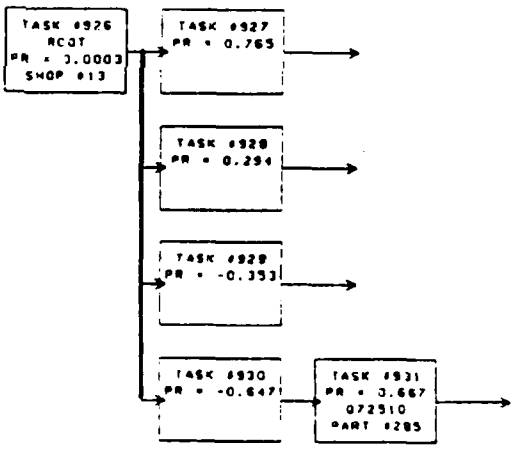

FIGURE 59

RESOURCE REQUIREMENTS
AIRCRAFT, PART AND SUPPORT EQUIPMENT REPAIR DATA

III 1.5.60 TASK #932 NETWORK - 73100 -- ATTITUDE REFERENCE BOMBING COMPUTER SYS -

		PERSONNEL				AGE				
SUBTASK	PROB	TEAM 1 TYP	#	TEAM 2 TYP	#	#1	#2	PART NO.	TIME	DIS
933	.143	9	2	--	--	--	--	--	60	0
934	.245	9	2	--	--	--	--	--	120	0
935	.549	9	1	--	--	--	--	--	156	0
936	-.130	9	2	--	--	60	--	--	114	0
937	-.670	9	1	--	--	60	--	--	141	0
938	-.018	--	--	--	--	--	--	286	--	0
939	-.083	--	--	--	--	--	--	287	--	0
940	-.116	--	--	--	--	--	--	288	--	0
941	.020	--	--	--	--	--	--	289	--	0
942	-.008	--	--	--	--	--	--	290	--	0
943	-.051	--	--	--	--	--	--	291	--	0
944	-.025	--	--	--	--	--	--	292	--	0
945	-.246	--	--	--	--	--	--	293	--	0
946	-.167	--	--	--	--	--	--	294	--	0
947	-.058	--	--	--	--	--	--	295	--	0
948	-.025	--	--	--	--	--	--	296	--	0
949	-.105	9	1	--	--	--	--	297	--	0

TOTAL NUMBER OF SUBTASKS = 17

RESOURCE REQUIREMENTS
AIRCRAFT, PART AND SUPPORT EQUIPMENT REPAIR DATA

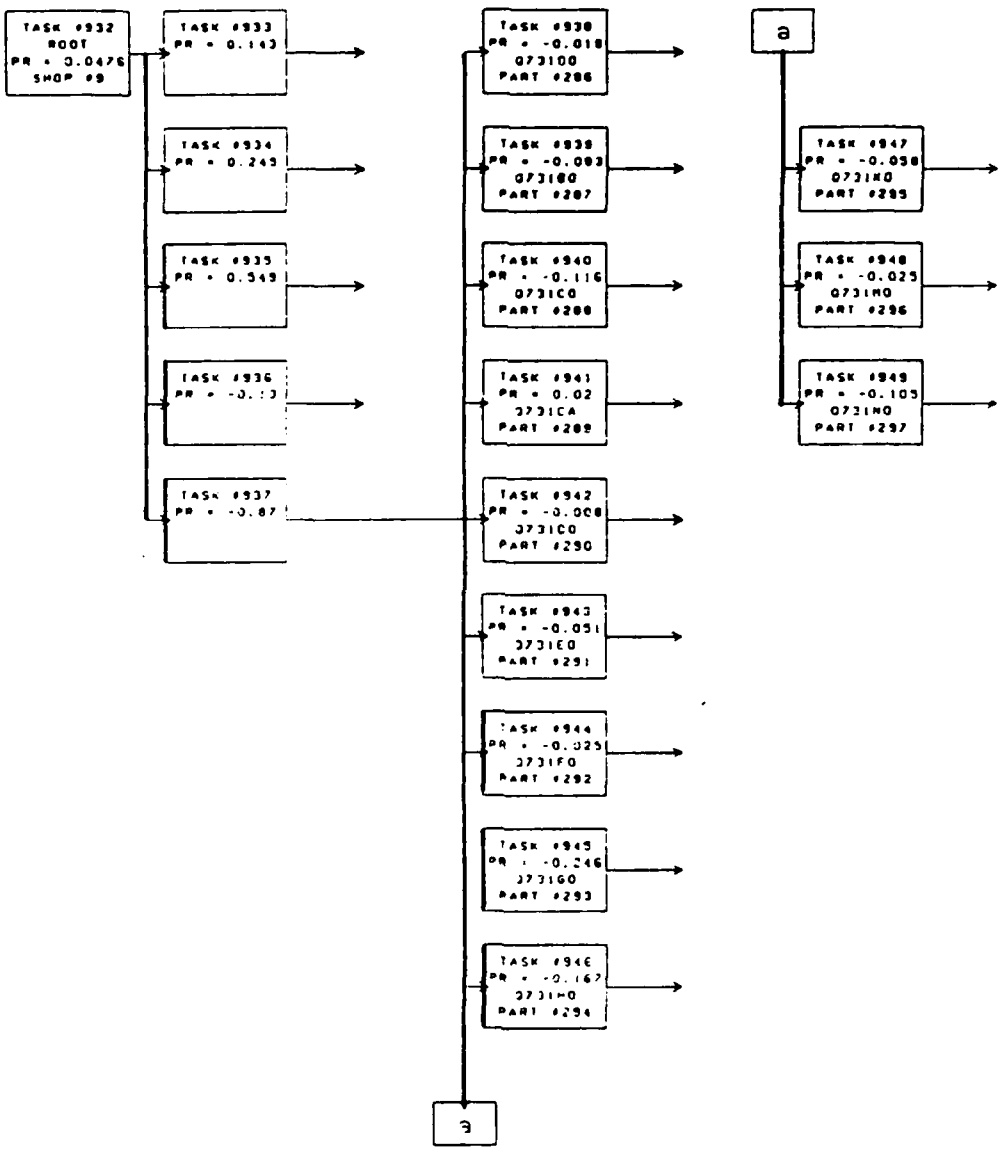

FIGURE 60

III.1.5.61 TASK #950 NETWORK - 73200 -- SELF CONTAINED STANDBY ATTITUDE INDIC SYS -

		PERSONNEL								
		TEAM 1		TEAM 2		AGE		PART		
SUBTASK	PROB	TYP	#	TYP	#	#1	#2	NO.	TIME	DIS
951	.125	9	1	--	--	--	--	--	30	0
952	.375	9	1	--	--	--	--	--	42	0
953	.188	9	1	--	--	--	--	--	132	0
954	1.000	9	1	--	--	60	--	--	114	0
955	-.313	--	--	--	--	--	--	298	--	0
956	-.063	--	--	--	--	--	--	299	--	0

TOTAL NUMBER OF SUBTASKS = 6

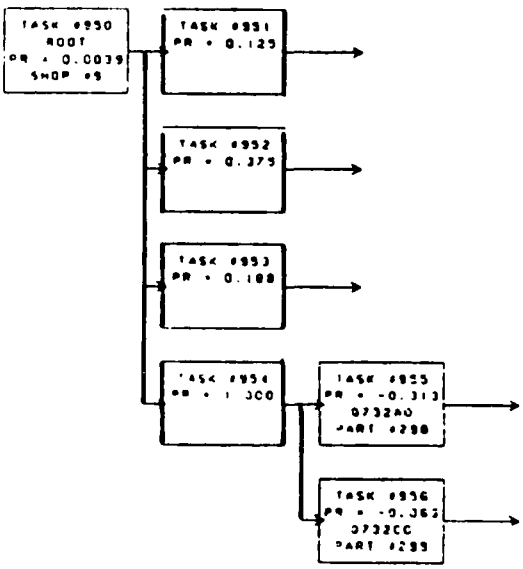

FIGURE 61

III.1.5.62 TASK #957 NETWORK - 73500 -- COMPUTER SYSTEM AN/ASQ-91 -

		PERSONNEL								
		TEAM 1		TEAM 2		AGE		PART		
SUBTASK	PROB	TYP	#	TYP	#	#1	#2	NO.	TIME	DIS
958	.135	78	2	--	--	--	--	--	18	0
959	.080	78	2	--	--	--	--	--	24	0
960	.243	78	2	--	--	--	--	--	72	0
961	1.000	78	2	--	--	60	--	--	63	0
962	-.037	--	--	--	--	--	--	300	--	0
963	-.110	--	--	--	--	--	--	301	--	0
964	-.174	--	--	--	--	--	--	302	--	0
965	.005	--	--	--	--	--	--	303	--	0
966	.008	--	--	--	--	--	--	304	--	0
967	.005	--	--	--	--	--	--	305	--	0
968	-.002	--	--	--	--	--	--	306	--	0
969	-.004	--	--	--	--	--	--	307	--	0

TOTAL NUMBER OF SUBTASKS = 12

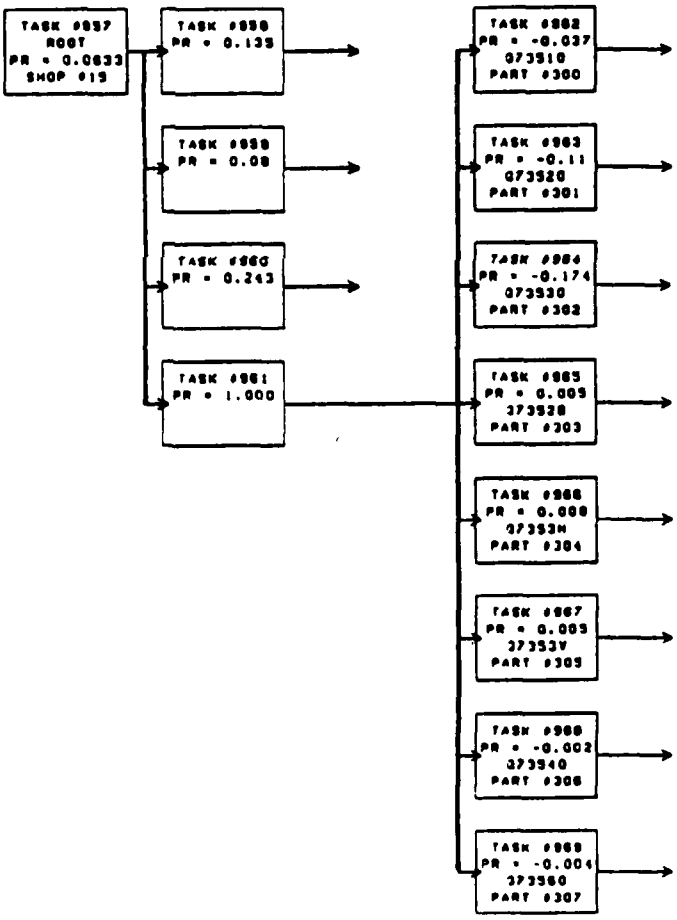

FIGURE 62

RESOURCE REQUIREMENTS
AIRCRAFT, PART AND SUPPORT EQUIPMENT REPAIR DATA

III 1 5 63 TASK #970 NETWORK - 73G00 -- DIGITAL MODULAR AVIONICS SYSTEM -

		PERSONNEL								
		TEAM 1		TEAM 2		AGE		PART		
SUBTASK	PROB	TYP	#	TYP	#	#1	#2	NO.	TIME	DIS
971	.321	78	2	--	--	--	--	--	30	0
972	.268	78	2	--	--	--	--	--	240	0
973	.321	78	2	--	--	--	--	--	162	0
974	1.000	78	2	--	--	60	--	--	204	0
975	-.013	--	--	--	--	--	--	308	--	0
976	-.092	78	2	--	--	--	--	309	--	0
977	.018	--	--	--	--	--	--	310	--	0
978	.018	--	--	--	--	--	--	311	--	0
979	-.066	--	--	--	--	--	--	312	--	0
980	-.040	78	2	--	--	--	--	313	--	0
981	.018	--	--	--	--	--	--	314	--	0
982	-.013	--	--	--	--	--	--	315	--	0
983	.036	--	--	--	--	--	--	316	--	0
984	-.013	--	--	--	--	--	--	317	--	0
985	-.013	--	--	--	--	--	--	318	--	0
986	-.013	--	--	--	--	--	--	319	--	0

TOTAL NUMBER OF SUBTASKS = 16

RESOURCE REQUIREMENTS
AIRCRAFT, PART AND SUPPORT EQUIPMENT REPAIR DATA

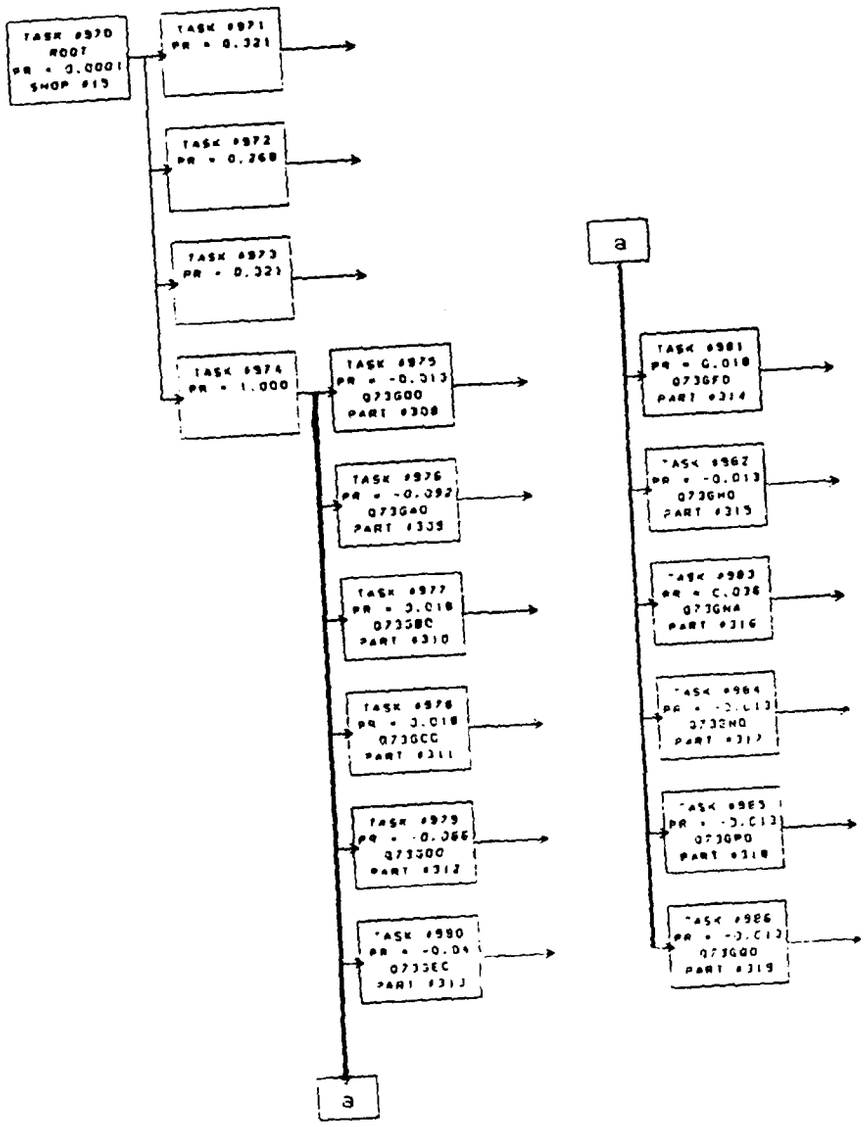

FIGURE 63

III.1.5.64 TASK #987 NETWORK - 74800 -- LEAD COMPUTING SIGHT AN/ASG-26A -

		PERSONNEL								
		TEAM 1		TEAM 2		AGE		PART		
SUBTASK	PROB	TYP	#	TYP	#	#1	#2	NO.	TIME	DIS
988	.262	16	2	--	--	--	--	--	60	0
989	.205	16	2	--	--	--	--	--	60	0
990	.193	16	2	--	--	--	--	--	132	0
991	1.000	16	2	--	--	60	--	--	123	0
992	-.036	--	--	--	--	--	--	320	--	0
993	-.117	--	--	--	--	--	--	321	--	0
994	-.168	16	2	--	--	--	--	322	--	0

TOTAL NUMBER OF SUBTASKS = 7

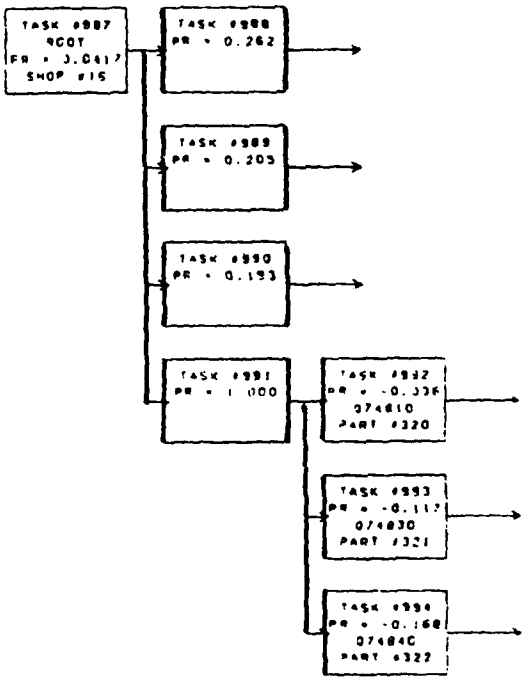

FIGURE 64

III.1.5.65 TASK #995 NETWORK - 74900 -- -

SUBTASK	PROB	PERSONNEL TEAM 1 TYP	TEAM 1 #	TEAM 2 TYP	TEAM 2 #	AGE #1	AGE #2	PART NO.	TIME	DIS
996	.185	16	2	--	--	--	--	--	42	0
997	.199	16	2	--	--	--	--	--	60	0
998	.267	16	2	--	--	--	--	--	144	0
999	-.622	16	2	--	--	60	--	--	111	0
1000	-.378	16	1	--	--	60	--	--	72	0
1001	-.310	--	--	--	--	--	--	323	--	0
1002	-.137	--	--	--	--	--	--	324	--	0
1003	.005	--	--	--	--	--	--	325	--	0

TOTAL NUMBER OF SUBTASKS = 8

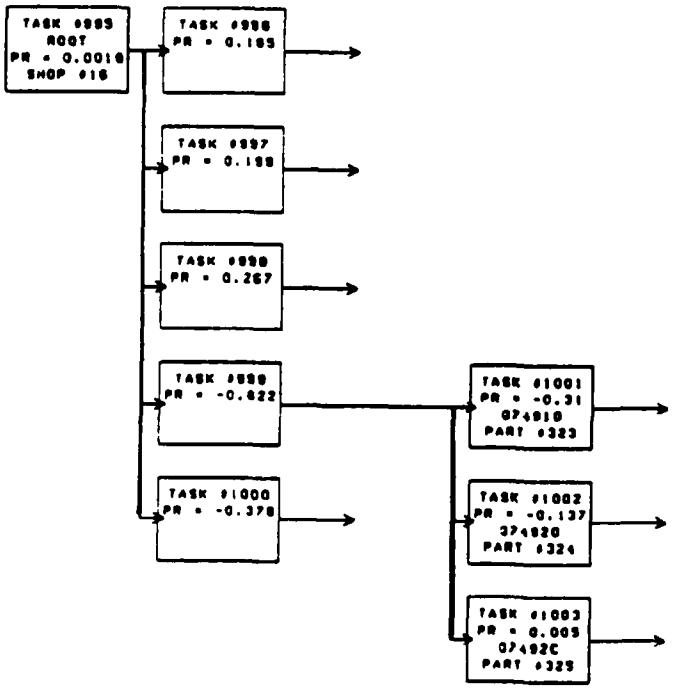

FIGURE 65

III 1.5.6G TASK #1004 NETWORK - 74B00 -- RADAR SET AN/APQ-120 -

SUBTASK	PROB	PERSONNEL TEAM 1 TYP	TEAM 1 #	TEAM 2 TYP	TEAM 2 #	AGE #1	AGE #2	PART NO.	TIME	DIS
1005	.342	16	2	--	--	--	--	--	60	0
1006	.337	16	2	--	--	--	--	--	60	0
1007	.450	16	2	--	--	--	--	--	120	0
1008	-.808	16	2	--	--	60	--	--	102	0
1009	- 192	16	1	--	--	60	--	--	72	0
1010	-.019	16	2	--	--	--	--	326	--	0
1011	- 065	16	1	--	--	--	--	327	--	0
1012	-.057	16	1	--	--	--	--	328	--	0
1013	-.029	16	2	--	--	--	--	329	--	0
1014	-.003	16	2	--	--	--	--	330	--	0
1015	-.040	16	2	--	--	--	--	331	--	0
1016	-.027	16	2	--	--	--	--	332	--	0
1017	-.012	--	--	-	--	--	--	333	--	0
1018	-.049	16	2	--	--	--	--	334	--	0
1019	-.006	16	2	--	--	--	--	335	--	0
1020	-.009	16	2	--	--	--	--	336	--	0
1021	-.008	--	--	--	--	--	--	337	--	0
1022	-.002	--	--	--	--	--	--	338	--	0
1023	-.074	16	2	--	--	--	--	339	--	0
1024	-.001	--	--	--	--	--	--	340	--	0
1025	-.011	--	--	--	--	--	--	341	--	0
1026	-.001	--	--	--	--	--	--	342	--	0
1027	-.001	16	2	--	--	--	--	343	--	0
1028	-.067	16	2	--	--	--	--	344	--	0
1029	-.003	16	2	--	--	--	--	345	--	0
1030	-.002	--	--	--	--	--	--	346	--	0

TOTAL NUMBER OF SUBTASKS = 26

RESOURCE REQUIREMENTS
AIRCRAFT, PART AND SUPPORT EQUIPMENT REPAIR DATA

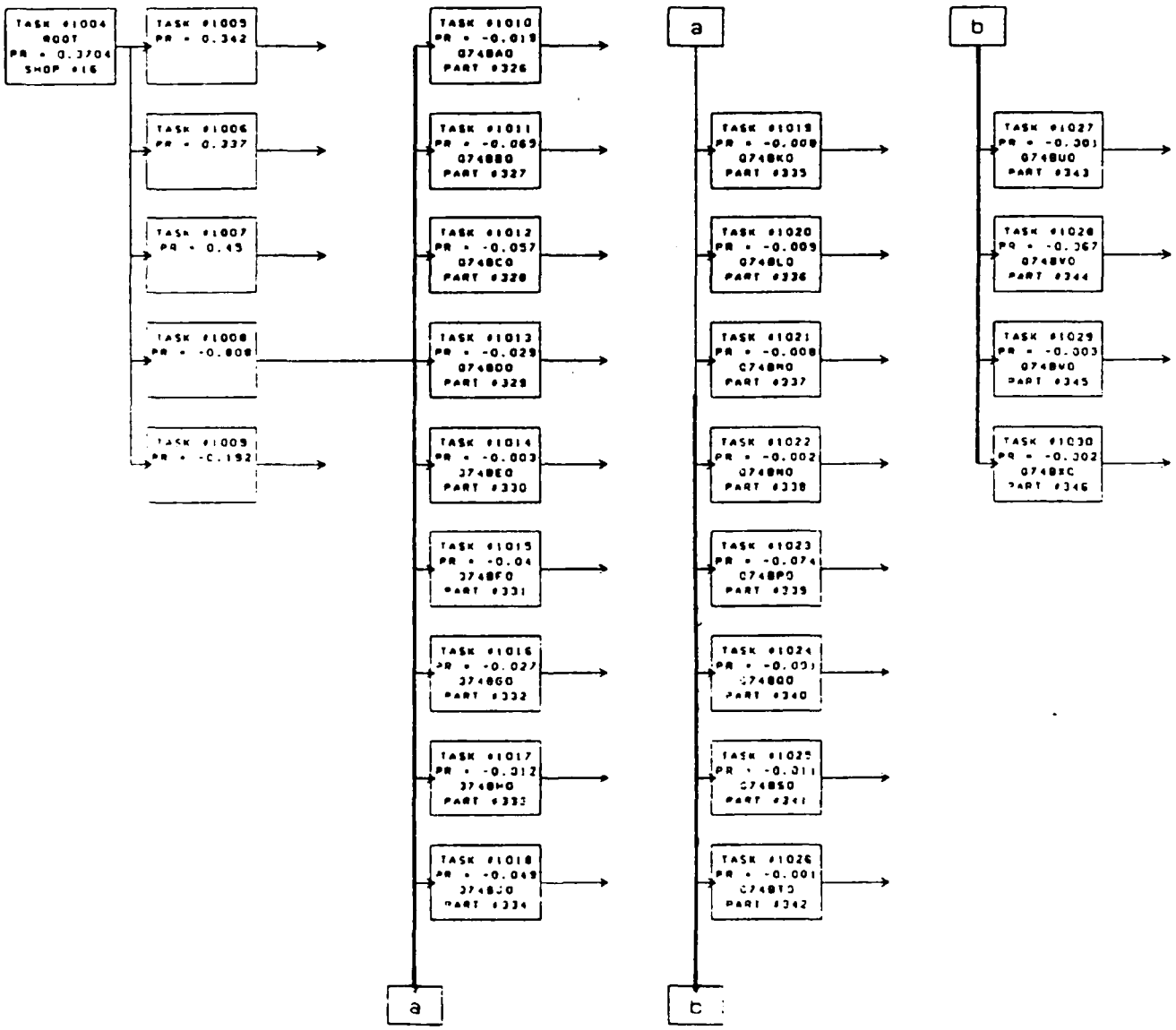

FIGURE 66

III.1.5.67 TASK #1031 NETWORK - 74C00 -- INDICATOR CONTROL UNIT -

SUBTASK	PROB	PERSONNEL TEAM 1 TYP	TEAM 1 #	TEAM 2 TYP	TEAM 2 #	AGE #1	AGE #2	PART NO.	TIME	DIS
1032	.021	16	2	--	--	--	--	--	60	0
1033	.021	16	2	--	--	--	--	--	60	0
1034	.974	16	2	--	--	--	--	--	114	0
1035	-.830	16	2	--	--	60	--	--	102	0
1036	-.170	16	1	--	--	60	--	--	54	0
1037	-.058	--	--	--	--	--	--	347	--	0
1038	-.289	--	--	--	--	--	--	348	--	0
1039	-.201	16	2	--	--	--	--	349	--	0
1040	-.213	16	2	--	--	--	--	350	--	0

TOTAL NUMBER OF SUBTASKS = 9

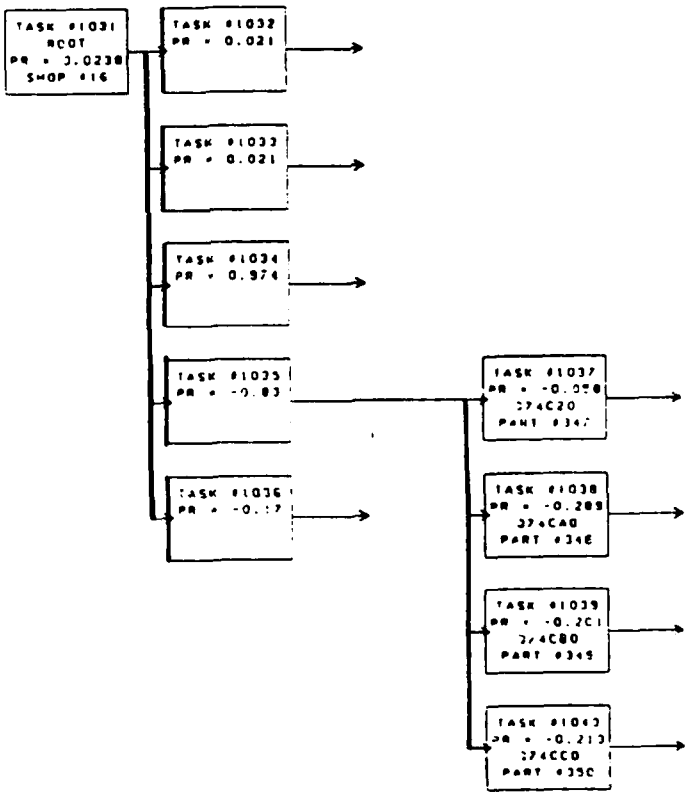

FIGURE 67

III 1.5 G6 TASK #1041 NETWORK - 74F00 -- MISSILE AUXILIARY GROUP -

SUBTASK	PROB	PERSONNEL TEAM 1 TYP	TEAM 1 #	TEAM 2 TYP	TEAM 2 #	AGE #1	AGE #2	PART NO.	TIME	DIS
1042	.119	16	2	--	--	--	--	--	120	0
1043	.048	16	2	--	--	--	--	--	180	0
1044	.690	16	2	--	--	--	--	--	102	0
1045	1.000	16	2	--	--	60	--	--	90	0
1046	.974	16	2	--	--	--	--	351	--	0

TOTAL NUMBER OF SUBTASKS = 5

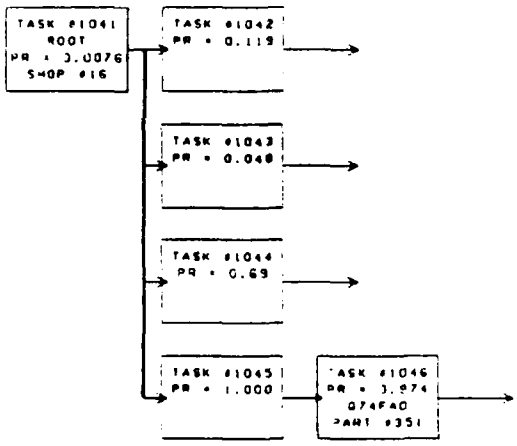

FIGURE 68

RESOURCE REQUIREMENTS
AIRCRAFT, PART AND SUPPORT EQUIPMENT REPAIR DATA

III 1.5.69 TASK #1047 NETWORK - 74K00 -- -

SUBTASK	PROB	PERSONNEL TEAM 1 TYP	TEAM 1 #	TEAM 2 TYP	TEAM 2 #	AGE #1	AGE #2	PART NO.	TIME	DIS
1048	1.000	16	2	--	--	--	--	352	--	0
1049	.091	--	--	--	--	--	--	353	--	0

TOTAL NUMBER OF SUBTASKS = 2

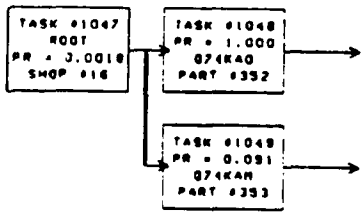

FIGURE 69

III.1.5.70 TASK #1051 NETWORK - 75100 -- SUSPENSION SYSTEM -

		PERSONNEL								
		TEAM 1		TEAM 2		AGE		PART		
SUBTASK	PROB	TYP	#	TYP	#	#1	#2	NO.	TIME	DIS
1052	.392	70	2	--	--	65	--	--	30	0
1053	.054	70	2	--	--	66	--	--	42	0
1054	-.321	70	2	--	--	60	--	--	63	0
1055	-.082	18	1	--	--	--	--	--	72	0
1056	-.363	2	1	--	--	--	--	--	102	0
1057	-.234	70	3	--	--	60	--	--	96	0
1058	.735	--	--	--	--	--	--	354	--	0
1059	-.356	--	--	--	--	--	--	355	--	0
1060	.102	--	--	--	--	--	--	356	--	0
1061	-.147	--	--	--	--	--	--	357	--	0
1062	-.206	--	--	--	--	--	--	358	--	0
1063	-.026	--	--	--	--	--	--	359	--	0

TOTAL NUMBER OF SUBTASKS = 12

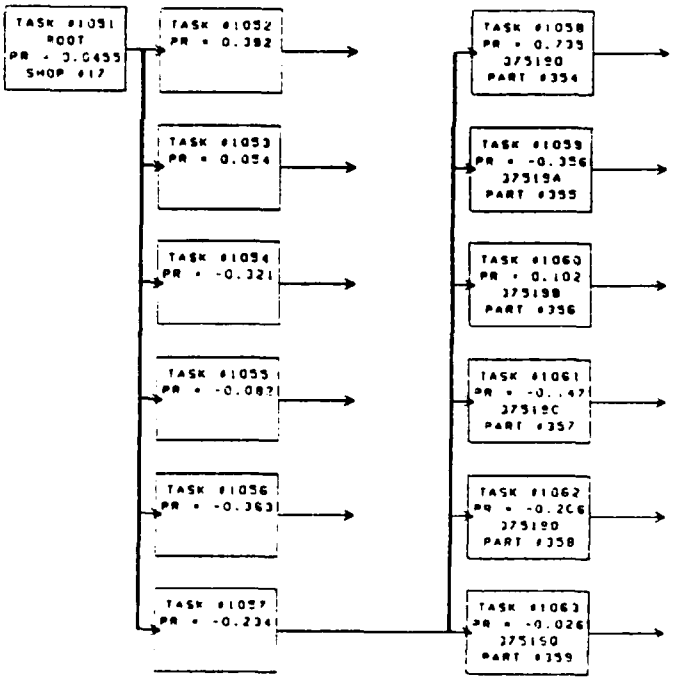

FIGURE 70

III 1 5 71 TASK #1064 NETWORK - 75300 -- EJECTOR RACKS -

SUBTASK	PROB	PERSONNEL TEAM 1 TYP	TEAM 1 #	TEAM 2 TYP	TEAM 2 #	AGE #1	AGE #2	PART NO.	TIME	DIS
1065	.080	28	3	--	--	--	--	--	18	0
1066	.493	70	3	--	--	--	--	--	18	0
1067	.080	70	3	--	--	--	--	--	48	0
1068	.253	28	3	--	--	--	--	--	102	0
1069	1.000	70	3	--	--	--	--	--	78	0
1070	1.000	70	3	--	--	--	--	--	78	0
1071	.400	70	3	--	--	--	--	--	78	0
1072	.013	70	3	--	--	--	--	--	78	0
1073	-.939	70	3	--	--	60	56	--	30	0
1074	-.061	28	2	--	--	66	--	--	72	0
1075	-.045	28	3	--	--	66	--	--	102	0
1076	-.451	70	3	--	--	66	--	--	66	0
1077	1.000	--	--	--	--	--	--	--	--	0
1078	-.667	--	--	--	--	--	--	360	--	0
1079	-.026	--	--	--	--	--	--	361	--	0
1080	-.153	--	--	--	--	--	--	362	--	0

TOTAL NUMBER OF SUBTASKS = 16

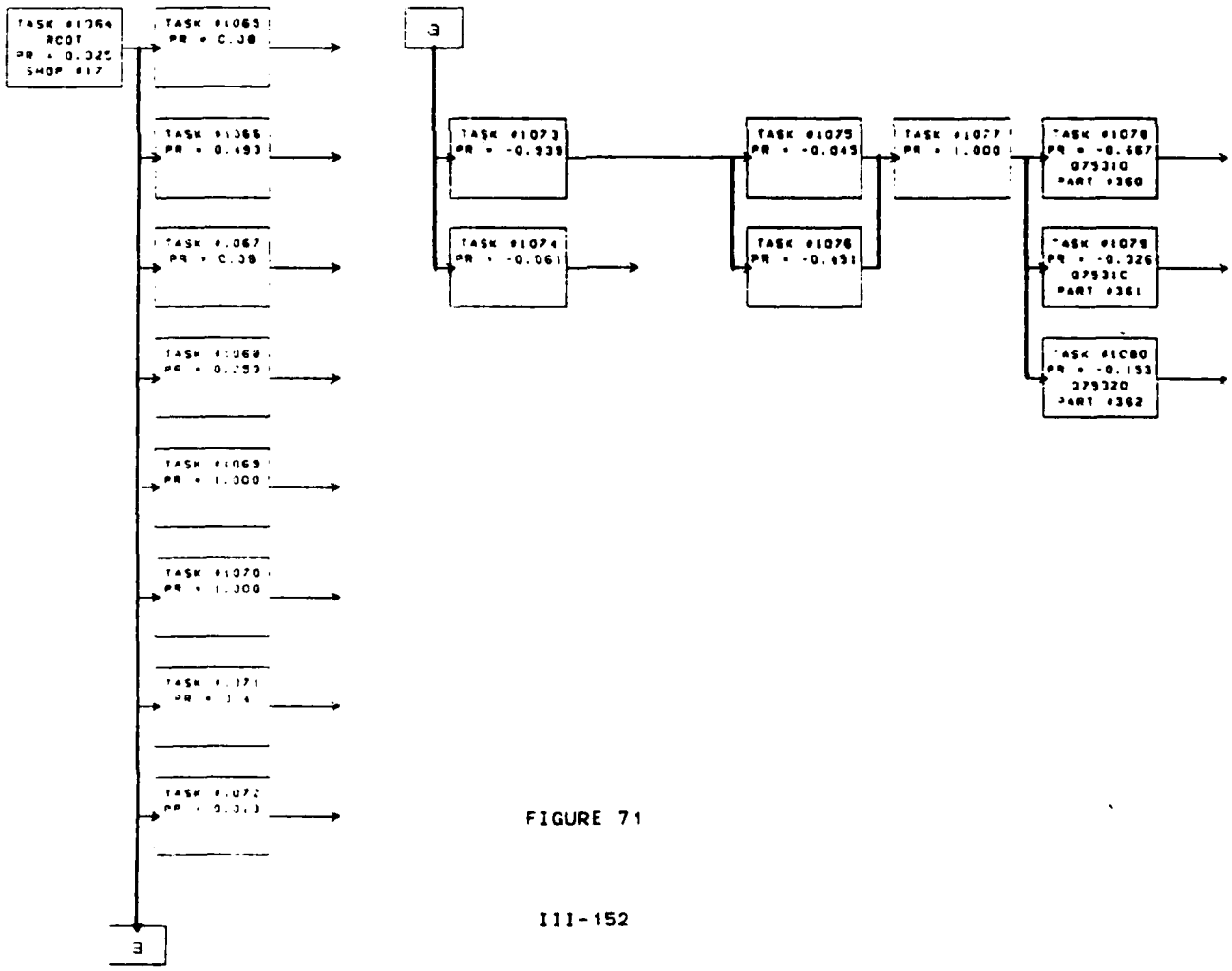

FIGURE 71

III.1.5 72 TASK #1081 NETWORK - 75600 -- MISSILE FIRING CIRCUITS -

		PERSONNEL								
		TEAM 1		TEAM 2		AGE		PART		
SUBTASK	PROB	TYP	#	TYP	#	#1	#2	NO.	TIME	DIS
1082	.036	16	2	--	--	--	--	--	180	0
1083	.071	16	2	--	--	--	--	--	180	0
1084	.018	28	2	--	--	--	--	--	66	0
1085	.071	16	2	--	--	--	--	--	282	0
1086	.018	28	2	--	--	--	--	--	120	0
1087	.107	70	3	--	--	--	--	--	84	0
1088	1.000	70	3	--	--	60	--	--	42	0
1089	- .175	16	2	--	--	60	--	--	162	0
1090	-.019	28	2	--	--	--	--	--	120	0
1091	-.467	70	3	--	--	--	--	--	72	0
1092	1.000	--	--	--	--	--	--	--	--	0
1093	- .105	--	--	--	--	--	--	363	--	0
1094	-.026	--	--	--	--	--	--	364	--	0
1095	-.053	--	--	--	--	--	--	365	--	0
1096	-.079	--	--	--	--	--	--	366	--	0
1097	.027	--	--	--	--	--	--	367	--	0
1098	-.369	--	--	--	--	--	--	368	--	0

TOTAL NUMBER OF SUBTASKS = 17

RESOURCE REQUIREMENTS
AIRCRAFT, PART AND SUPPORT EQUIPMENT REPAIR DATA

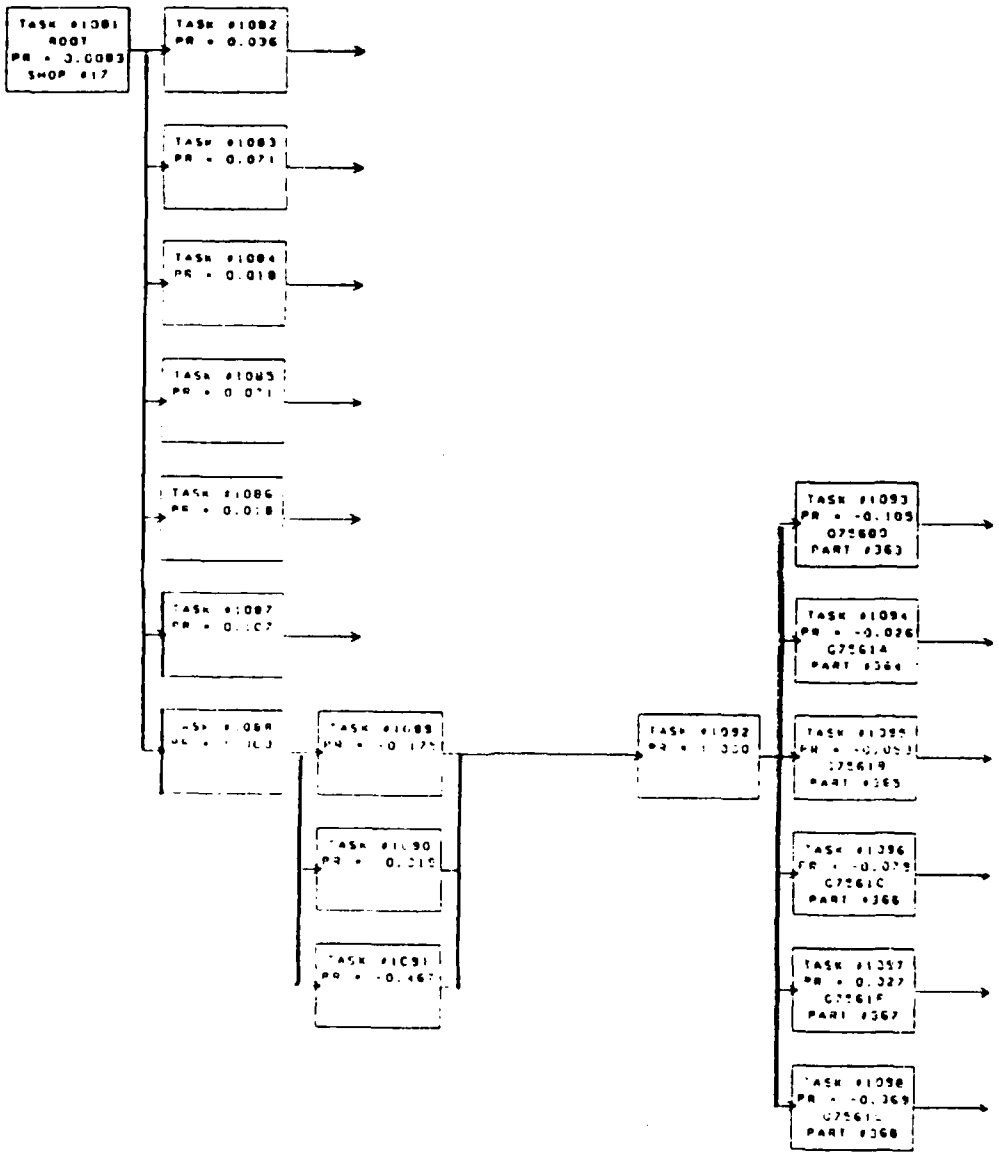

FIGURE 72

III : 5 73 TASK #1099 NETWORK - 75900 -- MULTIPLE WEAPONS RELEASE SYSTEM -

SUBTASK	PROB	PERSONNEL TEAM 1 TYP	TEAM 1 #	TEAM 2 TYP	TEAM 2 #	AGE #1	AGE #2	PART NO.	TIME	DIS
1100	.130	70	3	--	--	--	--	--	30	0
1101	.087	70	3	--	--	--	--	--	90	0
1102	.203	70	3	--	--	--	--	--	132	0
1103	-.052	28	2	--	--	--	--	--	90	0
1104	-.948	70	3	--	--	60	--	--	99	0
1105	-.074	--	--	--	--	--	--	369	--	0
1106	-.015	--	--	--	--	--	--	370	--	0
1107	-.015	--	--	--	--	--	--	371	--	0
1108	-.134	--	--	--	--	--	--	372	--	0

TOTAL NUMBER OF SUBTASKS = 9

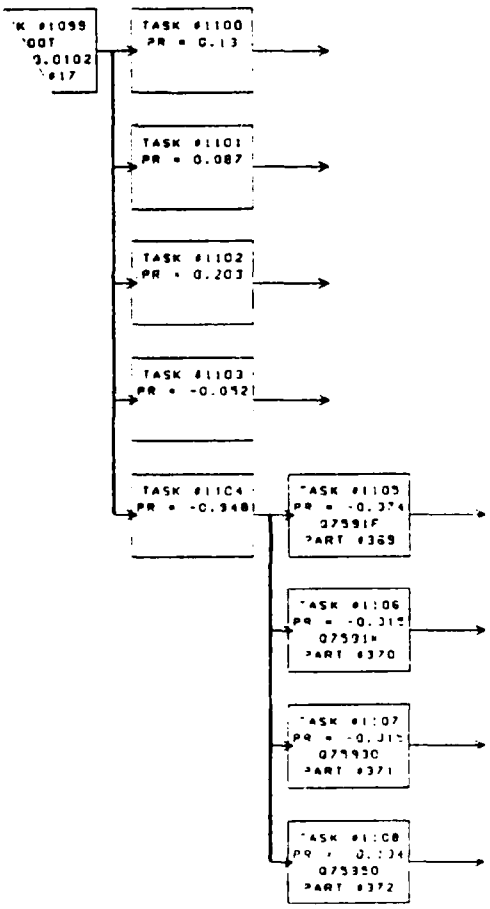

FIGURE 73

RESOURCE REQUIREMENTS
AIRCRAFT, PART AND SUPPORT EQUIPMENT REPAIR DATA

III 1.5 74 TASK #1109 NETWORK - 75E00 -- GUN PALLETIZED INTERNAL.-

SUBTASK	PROB	PERSONNEL TEAM 1 TYP	TEAM 1 #	TEAM 2 TYP	TEAM 2 #	AGE #1	AGE #2	PART NO.	TIME	DIS
1110	018	6	2	--	--	--	--	--	60	0
1111	645	70	3	--	--	--	--	--	48	0
1112	012	6	2	--	--	--	--	--	60	0
1113	107	70	3	--	--	--	--	--	48	0
1114	-.964	70	3	--	--	60	--	--	45	0
1115	-.036	6	2	--	--	--	--	--	162	0
1116	-.012	6	2	--	--	--	--	--	162	0
1117	-.405	70	3	--	--	--	--	--	150	0
1118	.926	--	--	--	--	--	--	--	--	0
1119	.697	70	3	--	--	--	--	373	--	0
1120	029	--	--	--	--	--	--	374	--	0
1121	044	--	--	--	--	--	--	375	--	0
1122	059	--	--	--	--	--	--	376	--	0
1123	-.061	--	--	--	--	--	--	377	--	0
1124	-.212	--	--	--	--	--	--	378	--	0
1125	-.030	--	--	--	--	--	--	379	--	0
1126	.029	--	--	--	--	--	--	380	--	0
1127	-.048	--	--	--	--	--	--	381	--	0
1128	-.045	--	--	--	--	--	--	382	--	0
1129	.029	--	--	--	--	--	--	383	--	0
1130	-.015	--	--	--	--	--	--	384	--	0
1131	.029	--	--	--	--	--	--	385	--	0

TOTAL NUMBER OF SUBTASKS = 22

RESOURCE REQUIREMENTS
AIRCRAFT, PART AND SUPPORT EQUIPMENT REPAIR DATA

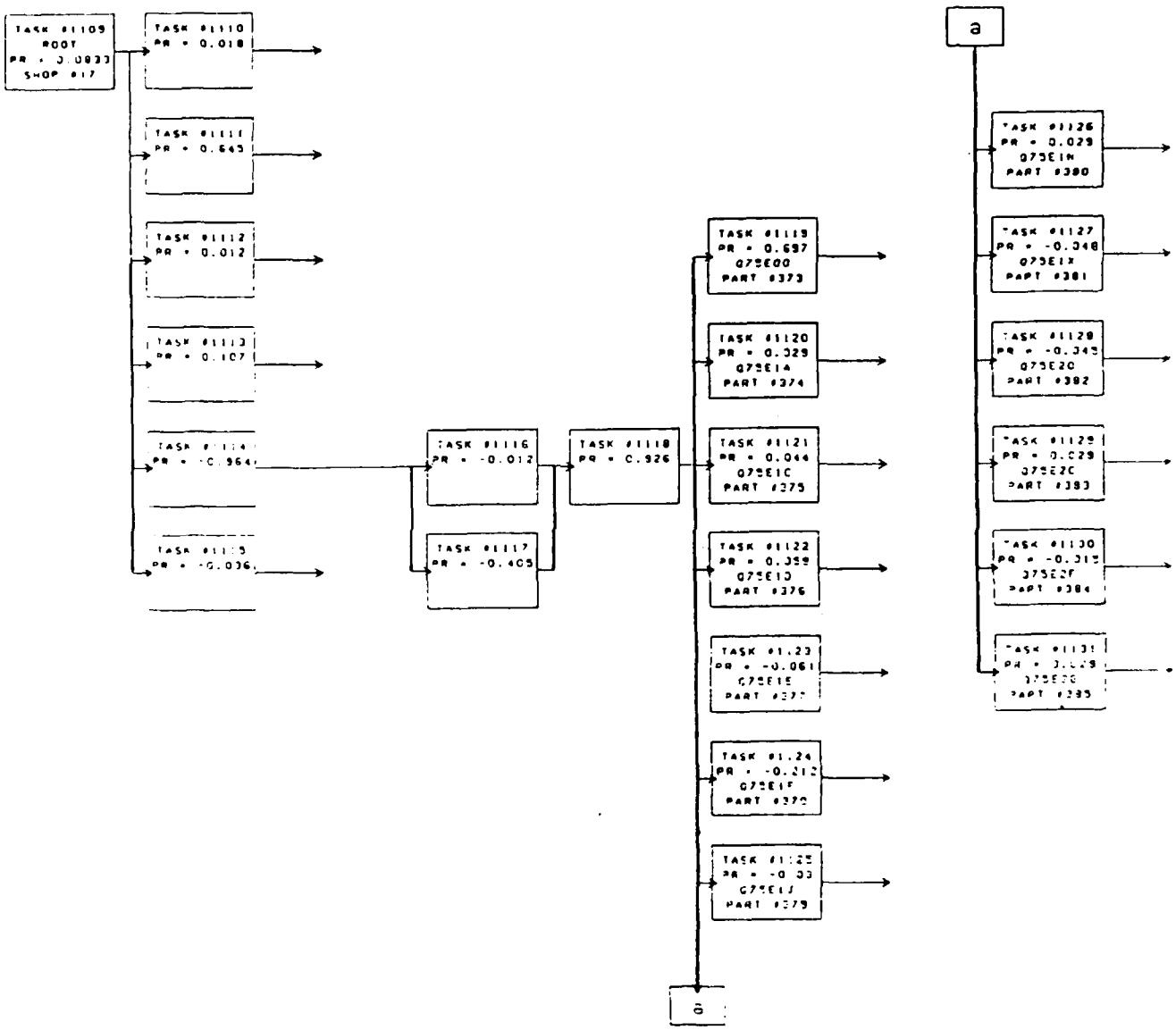

FIGURE 74

III.1.5.75 TASK #1132 NETWORK - 76500 -- AN/ALE-40 CHAFF/FLARE DISPENSING SYS -

		PERSONNEL								
		TEAM 1		TEAM 2		AGE		PART		
SUBTASK	PROB	TYP	#	TYP	#	#1	#2	NO.	TIME	DIS
1133	.163	85	3	--	--	--	--	--	60	0
1134	.261	85	2	--	--	--	--	--	42	0
1135	.967	85	1	--	--	--	--	--	102	0
1136	-.178	85	3	--	--	60	--	--	90	0
1137	-.800	85	1	--	--	60	--	--	69	0
1138	-.017	2	1	--	--	60	--	--	132	0
1139	.034	--	--	--	--	--	--	386	--	0
1140	-.052	--	--	--	--	--	--	387	--	0
1141	.007	--	--	--	--	--	--	388	--	0
1142	.014	--	--	--	--	--	--	389	--	0
1143	.061	--	--	--	--	--	--	390	--	0
1144	-.063	--	--	--	--	--	--	391	--	0
1145	.223	--	--	--	--	--	--	392	--	0
1146	-.346	--	--	--	--	--	--	393	--	0
1147	.007	--	--	--	--	--	--	394	--	0
1148	-.175	--	--	--	--	--	--	395	--	0

TOTAL NUMBER OF SUBTASKS = 16

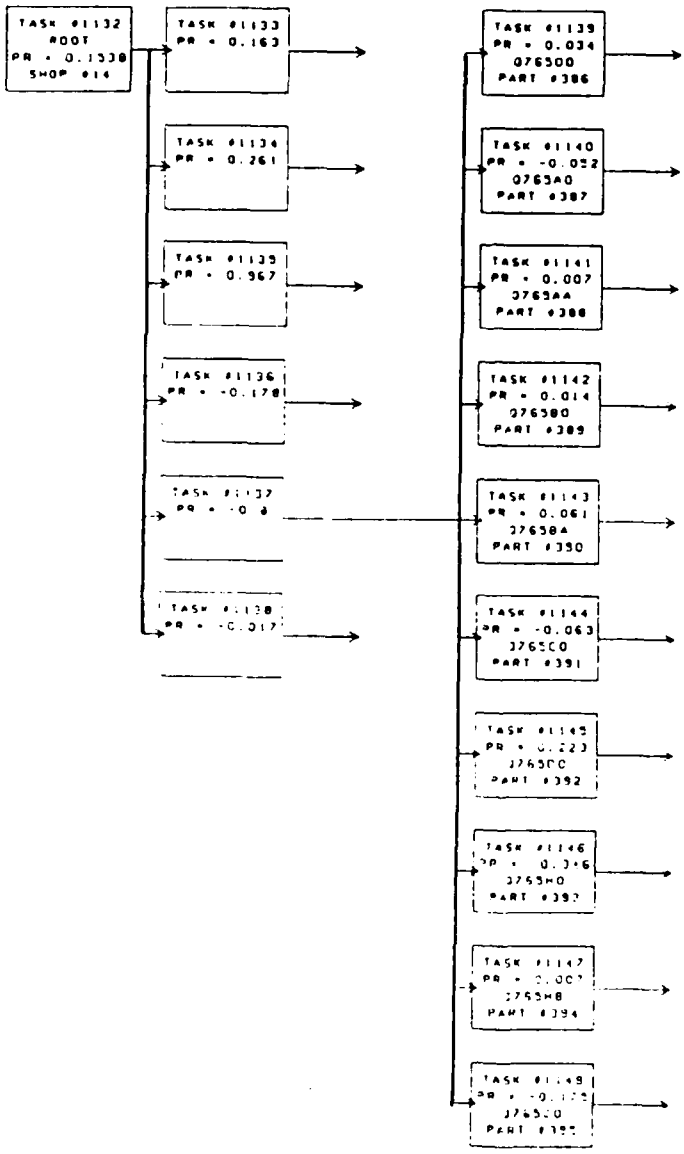
TASK #1132
ROOT
PR = 0.1538
SHOP #14
TASK #1133
PR = 0.163
TASK #1134
PR = 0.261
TASK #1135
PR = 0.967
TASK #1136
PR = -0.178
TASK #1137
TASK #1138
TASK #1139
PR = 0.034
076500
PART #386
TASK #1140
PR = -0.052
0765A0
PART #387
TASK #1141
PR = 0.007
0765AA
PART #388
TASK #1142
PR = 0.014
076580
PART #389
TASK #1143
PR = 0.061
07658A
PART #390
TASK #1144
PR = -0.063
0765C0
PART #391
TASK #1145
PR = 0.223
0765CC
PART #392
TASK #1146
0765H0
TASK #1147
0765H8
PART #394
TASK #1148

FIGURE 75

III.1.5 76 TASK #1149 NETWORK - 76G00 -- RADAR WARNING RECEIVER, AN/ALR-46A -

SUBTASK	PROB	PERSONNEL TEAM 1 TYP	TEAM 1 #	TEAM 2 TYP	TEAM 2 #	AGE #1	AGE #2	PART NO.	TIME	DIS
1150	.356	85	2	--	--	--	--	--	60	0
1151	.200	85	2	--	--	--	--	--	60	0
1152	.817	85	2	--	--	--	--	--	144	0
1153	1.000	85	2	--	--	60	--	--	96	0
1154	.011	--	--	--	--	--	--	396	--	0
1155	-.139	--	--	--	--	--	--	397	--	0
1156	.011	--	--	--	--	--	--	398	--	0
1157	.011	--	--	--	--	--	--	399	--	0
1158	.006	--	--	--	--	--	--	400	--	0
1159	.006	--	--	--	--	--	--	401	--	0
1160	-.012	--	--	--	--	--	--	402	--	0
1161	-.078	--	--	--	--	--	--	403	--	0
1162	.017	--	--	--	--	--	--	404	--	0
1163	-.004	--	--	--	--	--	--	405	--	0
1164	.011	--	--	--	--	--	--	406	--	0
1165	-.017	--	--	--	--	--	--	407	--	0
1166	-.041	--	--	--	--	--	--	408	--	0

TOTAL NUMBER OF SUBTASKS = 17

RESOURCE REQUIREMENTS
AIRCRAFT, PART AND SUPPORT EQUIPMENT REPAIR DATA

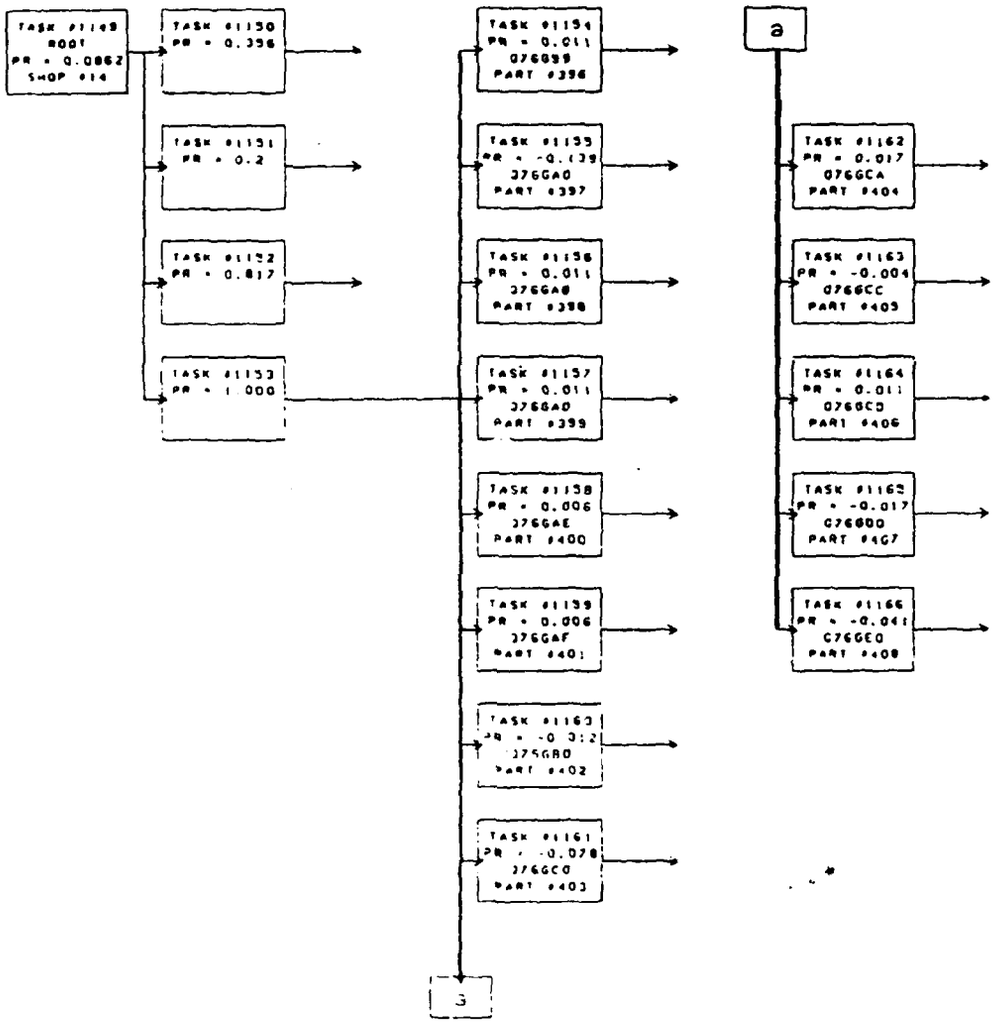

FIGURE 76

III.1.5 77 TASK #1167 NETWORK - 76K00 -- ECM POD -

SUBTASK	PROB	PERSONNEL TEAM 1 TYP	TEAM 1 #	TEAM 2 TYP	TEAM 2 #	AGE #1	AGE #2	PART NO.	TIME	DIS
1168	1.000	85	3	--	--	--	--	--	96	0
1169	1.000	85	3	--	--	--	--	--	96	0
1170	1.000	85	3	--	--	--	--	--	96	0
1171	1.000	85	3	--	--	--	--	--	96	0
1172	.750	85	3	--	--	--	--	--	96	0
1173	-.750	85	2	--	--	--	--	--	54	0
1174	-.250	85	3	--	--	--	--	--	84	0

TOTAL NUMBER OF SUBTASKS = 7

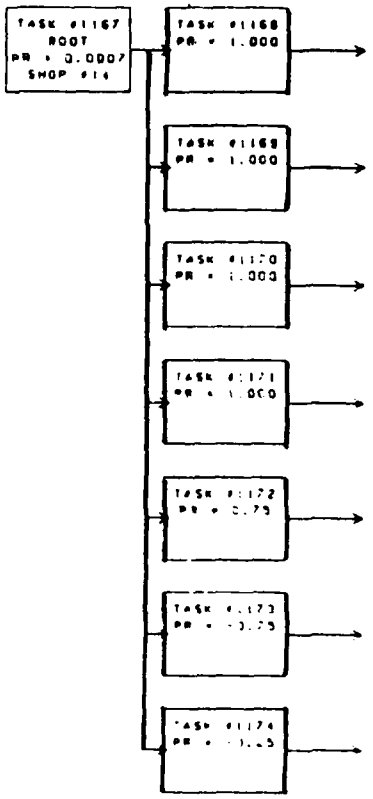

FIGURE 77

III 1 5.78 TASK #1175 NETWORK - 76MOO -- C-6175 CONTROL INDICATOR -

SUBTASK	PROB	PERSONNEL TEAM 1 TYP	TEAM 1 #	TEAM 2 TYP	TEAM 2 #	AGE #1	AGE #2	PART NO.	TIME	DIS
1176	.050	85	2	--	--	--	--	--	24	0
1177	.100	85	2	--	--	--	--	--	24	0
1178	1.000	85	1	--	--	--	--	--	78	0
1179	.600	85	1	--	--	--	--	--	78	0
1180	-.500	85	2	--	--	--	--	--	84	0
1181	-.500	85	1	--	--	--	--	--	66	0

TOTAL NUMBER OF SUBTASKS = 6

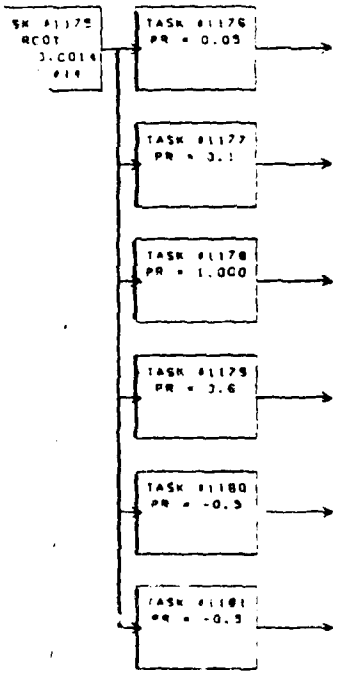

FIGURE 78

AD-A169 575 TSAR (THEATER SIMULATION OF AIRBASE RESOURCES) DATABASE DICTIONARY F-4E(U) ORLANDO TECHNOLOGY INC SHALIMAR FL D ROBINSON ET AL. 28 MAR 86 3/4

UNCLASSIFIED F/G 5/2 NL

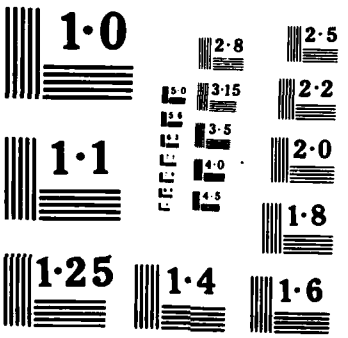
1·0
2·8
2·5
5·0
3·15
2·2
3·5
1·1
2·0
4·0
4·5
1·8
1·25
1·4
1·6

RESOURCE REQUIREMENTS
AIRCRAFT, PART AND SUPPORT EQUIPMENT REPAIR DATA

III.1.5.79 TASK #1182 NETWORK - 76X00 -- AN/ALQ-119 ECM POD -

SUBTASK	PROB	PERSONNEL TEAM 1 TYP	TEAM 1 #	TEAM 2 TYP	TEAM 2 #	AGE #1	AGE #2	PART NO.	TIME	DIS
1183	138	85	2	--	--	--	--	--	30	0
1184	172	85	2	--	--	--	--	--	16	0
1185	1.000	85	3	--	--	--	--	--	84	0
1186	1.000	85	3	--	--	--	--	--	84	0
1187	.816	85	3	--	--	--	--	--	84	0
1188	- .368	85	2	--	--	--	--	--	60	0
1189	- .632	85	3	--	--	--	--	--	72	0

TOTAL NUMBER OF SUBTASKS = 7

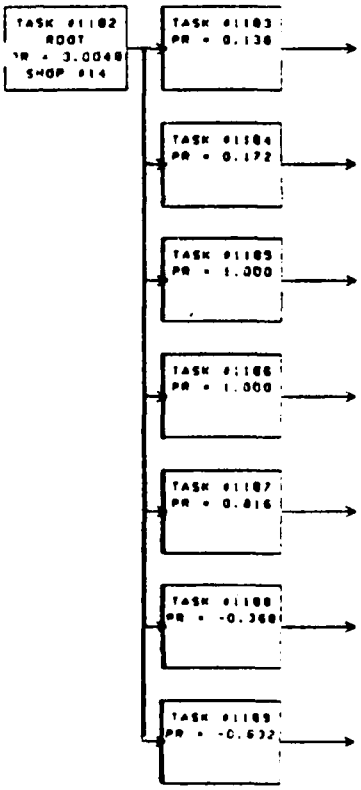

FIGURE 79

RESOURCE REQUIREMENTS
AIRCRAFT, PART AND SUPPORT EQUIPMENT REPAIR DATA

III.1 5 80 TASK #1190 NETWORK - 77J00 -- DIRECT RADAR SCOPE RECORDING SYS -

		PERSONNEL								
		TEAM 1		TEAM 2		AGE		PART		
SUBTASK	PROB	TYP	#	TYP	#	#1	#2	NO	TIME	DIS
1191	- 059	--	--	--	--	--	--	409	--	0
1192	042	--	--	--	--	--	--	410	--	0
1193	- 118	--	--	--	--	--	--	411	--	0

TOTAL NUMBER OF SUBTASKS = 3

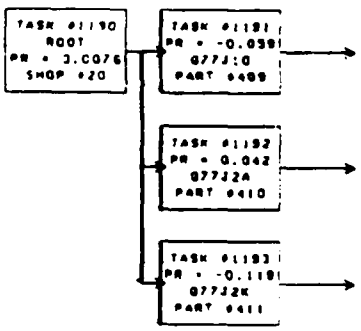

FIGURE 80

III.1.5.81 TASK #1194 NETWORK - 77X00 --COMBAT DOCUMENTATION SYSTEM -

SUBTASK	PROB	PERSONNEL TEAM 1 TYP	TEAM 1 #	TEAM 2 TYP	TEAM 2 #	AGE #1	AGE #2	PART NO.	TIME	DIS
1195	.032	20	1	--	--	--	--	--	24	0
1196	.194	20	1	--	--	--	--	--	136	0
1197	.226	20	1	--	--	--	--	--	54	0
1198	1.000	20	1	--	--	--	--	--	69	0
1199	.307	--	--	--	--	--	--	412	--	0

TOTAL NUMBER OF SUBTASKS = 5

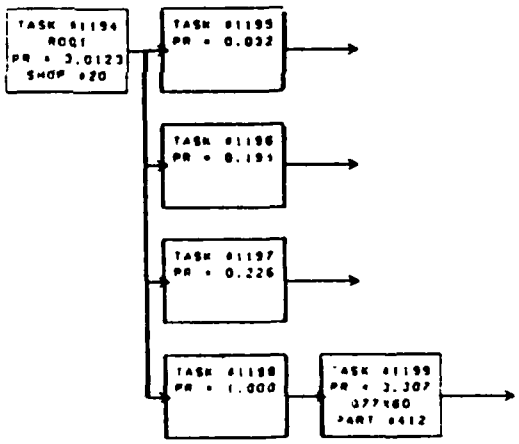

FIGURE 81

III 1 5 B2 TASK #1201 NETWORK - 91200 --EMERGENCY OXYGEN SYSTEM -

SUBTASK	PROB	PERSONNEL TEAM 1 TYP	TEAM 1 #	TEAM 2 TYP	TEAM 2 #	AGE #1	AGE #2	PART NO.	TIME	DIS
1202	.154	75	2	--	--	--	--	--	78	0
1203	1.000	75	2	--	--	--	--	--	78	0

TOTAL NUMBER OF SUBTASKS = 2

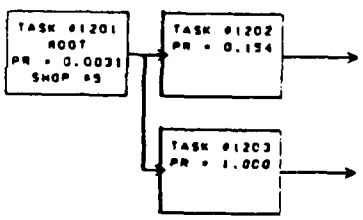

FIGURE B2

RESOURCE REQUIREMENTS
AIRCRAFT, PART AND SUPPORT EQUIPMENT REPAIR DATA

III.1.5 83 TASK #1205 NETWORK - 93200 -- STORAGE SYSTEM -

SUBTASK	PROB	PERSONNEL TEAM 1 TYP	TEAM 1 #	TEAM 2 TYP	TEAM 2 #	AGE #1	AGE #2	PART NO.	TIME	DIS
1206	.087	21	2	--	--	--	--	--	60	0
1207	.087	1	1	--	--	--	--	--	30	0
1208	.130	21	2	--	--	--	--	--	180	0
1209	.087	1	1	--	--	--	--	--	165	0
1210	1.000	--	--	--	--	--	--	--	--	0
1211	-.154	21	2	--	--	--	--	--	180	0
1212	-.846	1	1	--	--	--	--	--	156	0
1213	.714	--	--	--	--	--	--	--	--	0
1214	-.267	--	--	--	--	--	--	413	--	0
1215	-.466	--	--	--	--	--	--	414	--	0

TOTAL NUMBER OF SUBTASKS = 10

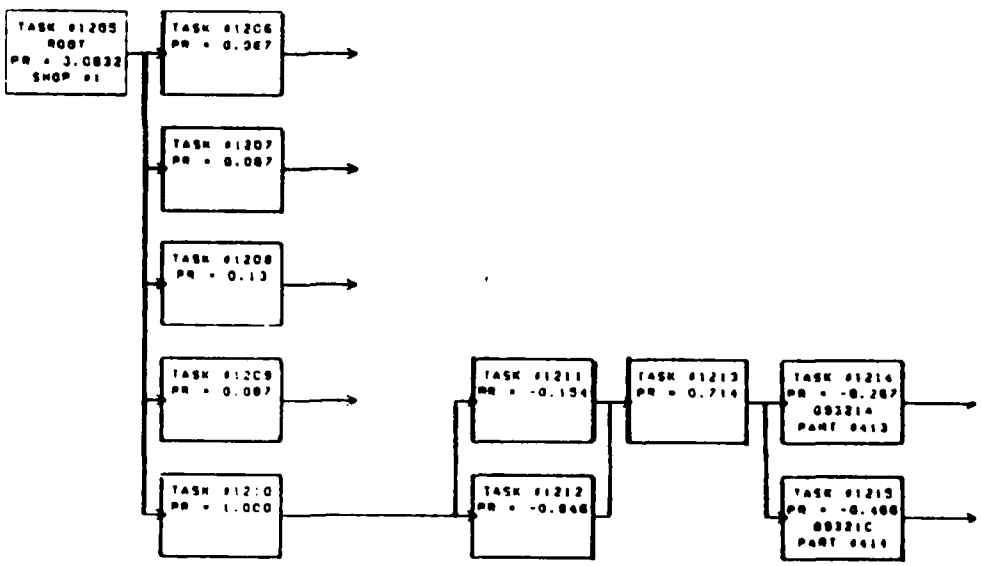

FIGURE 83

III 1 5 84 TASK #1216 NETWORK - 96100 -- PERSONNEL EQUIPMENT -

		PERSONNEL								
		TEAM 1		TEAM 2		AGE		PART		
SUBTASK	PROB	TYP	#	TYP	#	#1	#2	NO.	TIME	DIS
1217	1.000	75	2	--	--	--	--	--	60	0
1218	.417	75	2	--	--	--	--	--	60	0
1219	1.000	75	2	--	--	--	--	--	60	0

TOTAL NUMBER OF SUBTASKS = 3

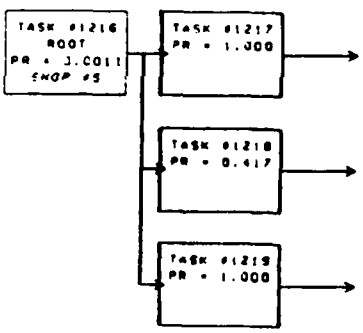

FIGURE 84

RESOURCE REQUIREMENTS
AIRCRAFT, PART AND SUPPORT EQUIPMENT REPAIR DATA

III 1 5.85 TASK #1220 NETWORK - 961XX -- -

SUBTASK	PROB	PERSONNEL TEAM 1 TYP	TEAM 1 #	TEAM 2 TYP	TEAM 2 #	AGE #1	AGE #2	PART NO	TIME	DIS
1221	- 040	12	1	--	--	--	--	--	30	0
1222	- .960	12	2	--	--	--	--	--	36	0

TOTAL NUMBER OF SUBTASKS = 2

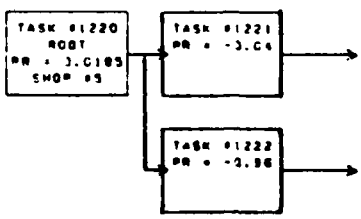

FIGURE 85

III 1.5.86 TASK #1223 NETWORK - 97900 -- MISC SERIES AIRCRAFT EXPLOSIVE DEVICES -

		PERSONNEL								
		TEAM 1		TEAM 2		AGE		PART		
SUBTASK	PROB	TYP	#	TYP	#	#1	#2	NO.	TIME	DIS
1224	.500	75	2	--	--	--	--	--	108	0
1225	1.000	75	2	--	--	--	--	--	72	0

TOTAL NUMBER OF SUBTASKS = 2

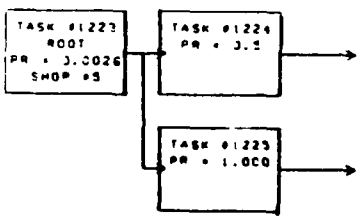

FIGURE 86

RESOURCE REQUIREMENTS
AIRCRAFT, PART AND SUPPORT EQUIPMENT REPAIR DATA

III 1.5 87 TASK #1226 NETWORK - 46300 --AIR REFUELING SYSTEM (F4G PECULIAR) -

SUBTASK	PROB	PERSONNEL TEAM 1 TYP	TEAM 1 #	TEAM 2 TYP	TEAM 2 #	AGE #1	AGE #2	PART NO.	TIME	DIS
1227	-.254	--	--	--	--	--	--	--	--	0
1228	-.254	1	3	--	--	--	--	--	90	0
1229	1.000	1	5	--	--	--	--	--	168	0
1230	1.000	23	2	--	--	--	--	--	30	0
1231	.091	23	2	--	--	--	--	--	30	0
1232	.273	3	1	--	--	--	--	--	30	0
1233	.273	23	2	--	--	--	--	--	120	0
1234	.091	3	1	--	--	--	--	--	60	0
1235	-.803	23	2	--	--	60	--	--	39	0
1236	-.197	3	1	--	--	56	60	--	114	0
1237	1.000	23	2	--	--	--	--	--	526	0
1238	.223	--	--	--	--	--	--	576	--	0

TOTAL NUMBER OF SUBTASKS = 12

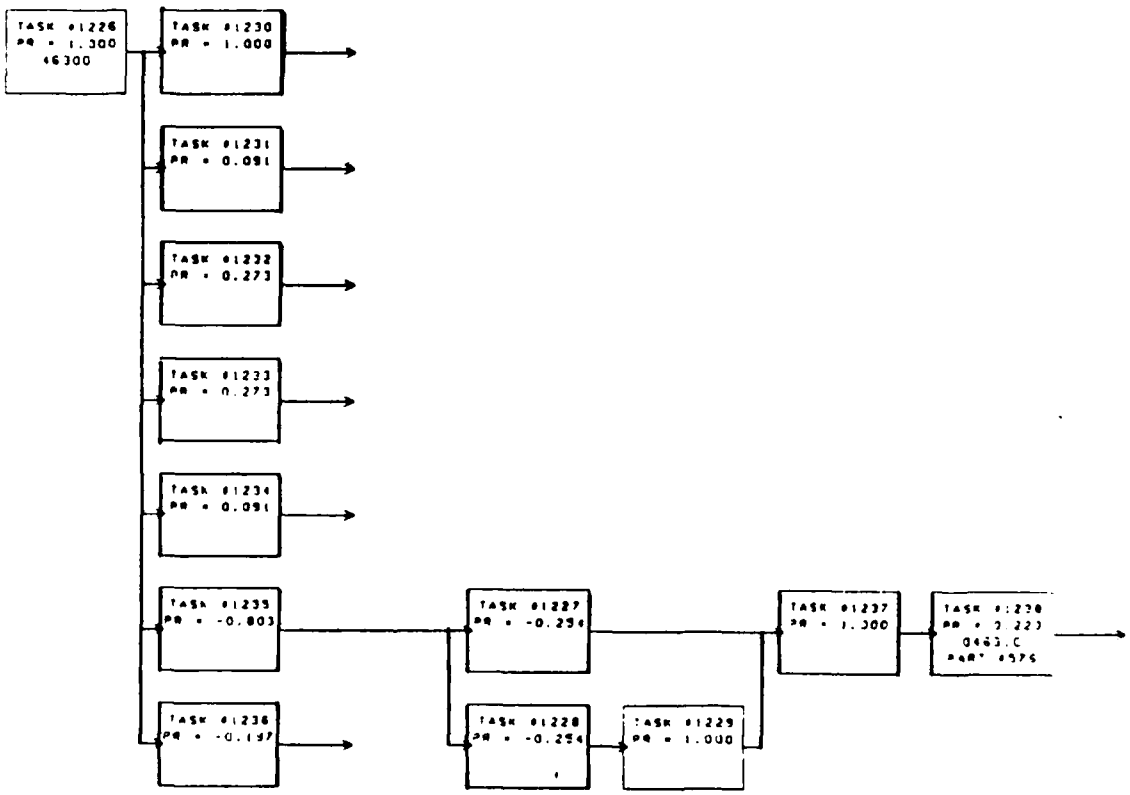

FIGURE 87

III 1.5.88 TASK #1239 NETWORK - 75100 -- SUSPENSION SYSTEM (F4E PECULIAR) -

		PERSONNEL				AGE				
		TEAM 1		TEAM 2				PART		
SUBTASK	PROB	TYP	#	TYP	#	#1	#2	NO.	TIME	DIS
1240	.052	2	1	--	--	--	--	--	18	0
1241	.117	28	2	--	--	--	--	--	30	0
1242	.591	70	3	--	--	--	--	--	18	0
1243	.058	70	3	--	--	--	--	--	90	0
1244	.727	28	2	--	--	--	--	--	108	0
1245	1.000	70	3	--	--	--	--	--	78	0
1246	1.000	70	3	--	--	--	--	--	78	0
1247	1.000	70	3	--	--	--	--	--	78	0
1248	1.000	70	3	--	--	--	--	--	78	0
1249	.273	70	3	--	--	--	--	--	78	0
1250	-.734	70	3	--	--	60	--	--	39	0
1251	-.245	2	1	--	--	60	--	--	132	0
1252	-.021	28	3	--	--	--	--	--	66	0
1253	-.041	28	3	--	--	65	--	--	90	0
1254	-.354	70	3	--	--	--	--	--	72	0
1255	.911	--	--	--	--	--	--	--	--	0
1256	-.024	--	--	--	--	--	--	577	--	0
1257	-.095	--	--	--	--	--	--	578	--	0
1258	-.119	--	--	--	--	--	--	579	--	0
1259	-.143	70	3	--	--	--	--	580	--	0
1260	.222	--	--	--	--	--	--	581	--	0
1261	-.071	--	--	--	--	--	--	582	--	0
1262	.067	--	--	--	--	--	--	583	--	0
1263	-.024	--	--	--	--	--	--	584	--	0
1264	.022	--	--	--	--	--	--	585	--	0
1265	-.143	--	--	--	--	--	--	586	--	0
1266	.067	--	--	--	--	--	--	587	--	0
1267	-.024	--	--	--	--	--	--	588	--	0
1268	-.048	--	--	--	--	--	--	589	--	0
1269	-.024	--	--	--	--	--	--	590	--	0
1270	-.024	--	--	--	--	--	--	591	--	0
1271	-.095	--	--	--	--	--	--	592	--	0
1272	.600	--	--	--	--	--	--	593	--	0
1273	.044	--	--	--	--	--	--	594	--	0
1274	-.024	--	--	--	--	--	--	595	--	0
1275	-.023	--	--	--	--	--	--	596	--	0

TOTAL NUMBER OF SUBTASKS = 36

RESOURCE REQUIREMENTS
AIRCRAFT, PART AND SUPPORT EQUIPMENT REPAIR DATA

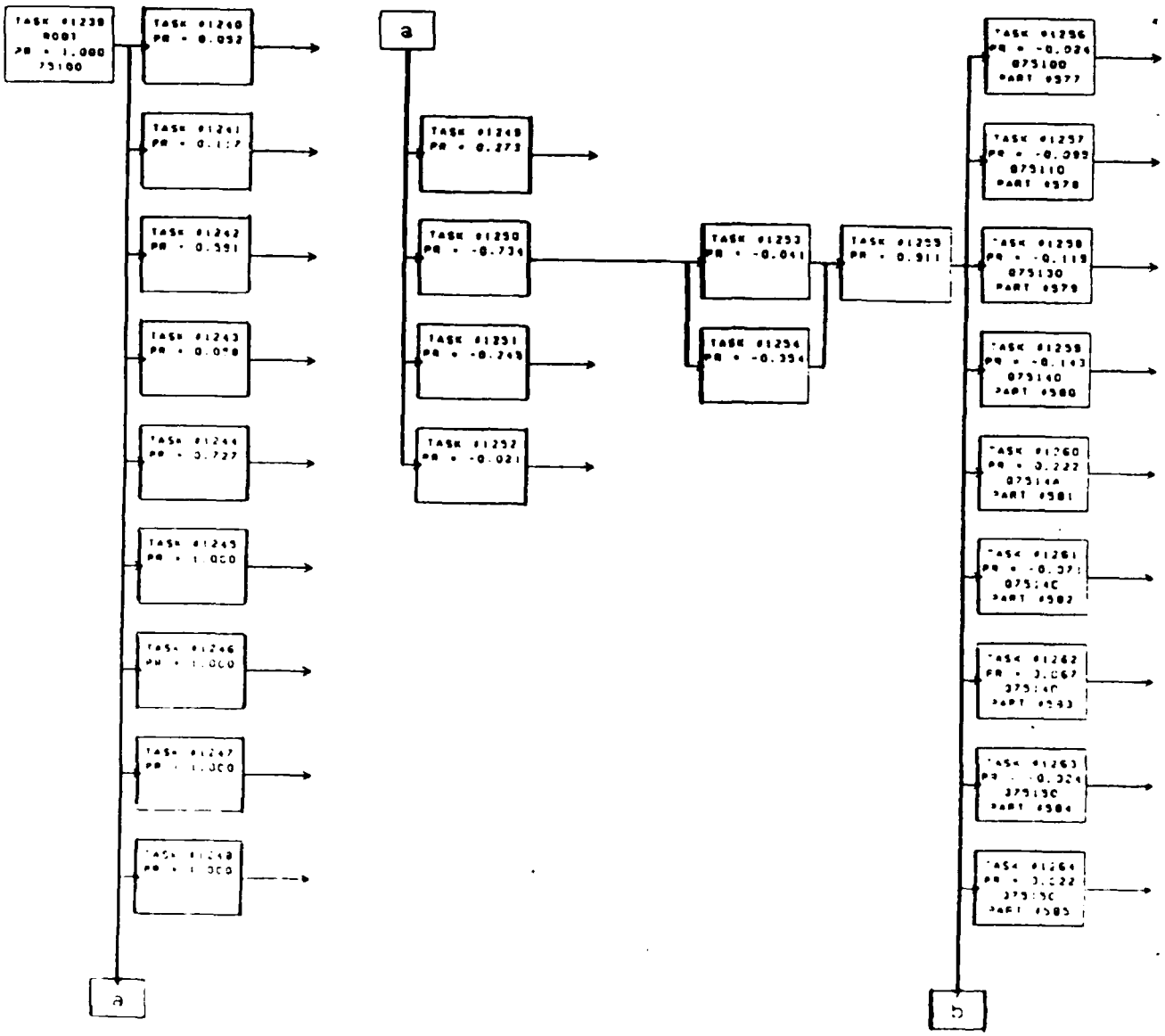

FIGURE 88a

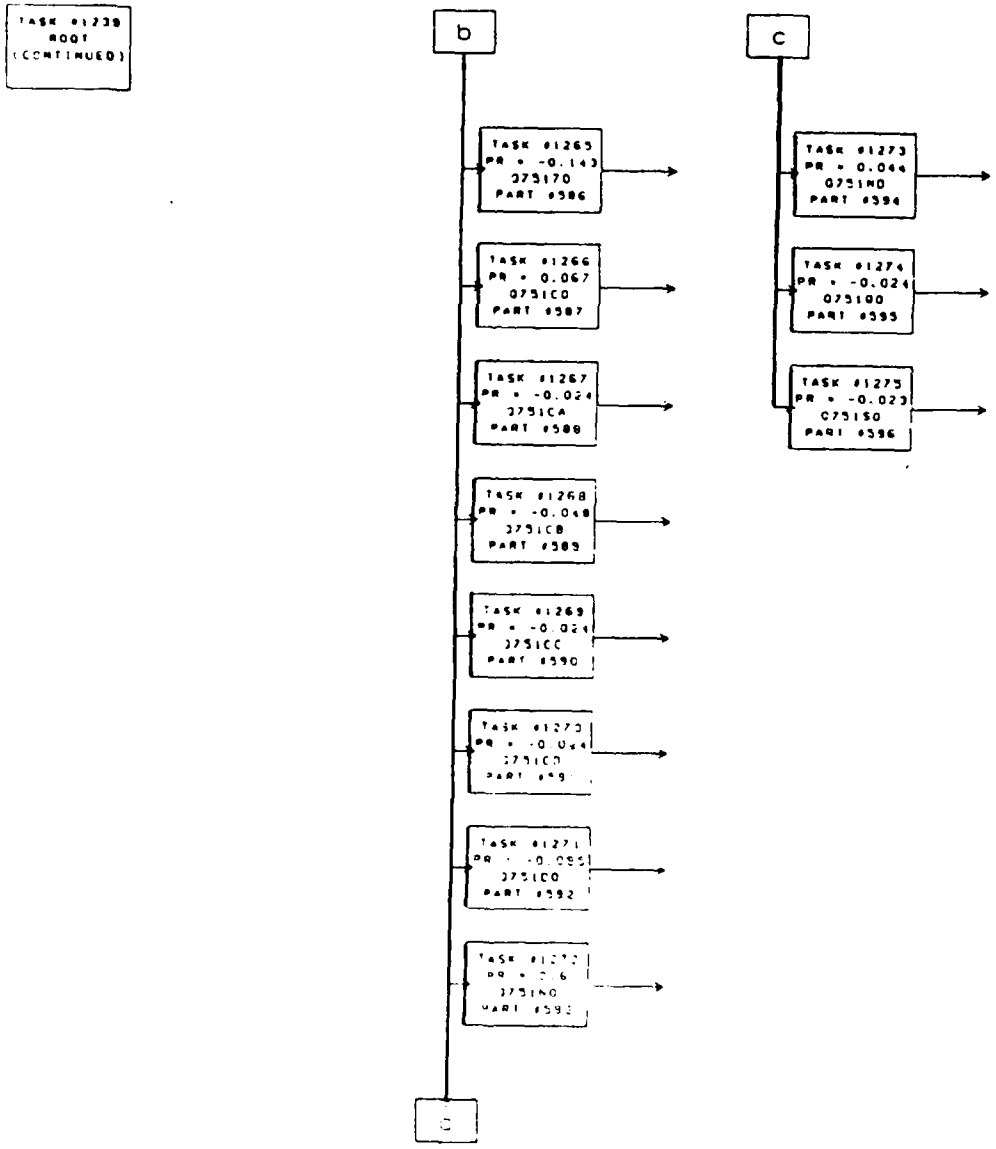
TASK #1239
ROOT
(CONTINUED)
b
c
TASK #1265
PR = -0.143
275170
PART #586
TASK #1266
PR = 0.067
0751C0
PART #587
TASK #1267
PR = -0.024
2751CA
PART #588
TASK #1268
PR = -0.048
2751CB
PART #589
TASK #1269
PR = -0.024
2751CC
PART #590
TASK #1273
PR = 0.044
0751N0
PART #594
TASK #1274
PR = -0.024
0751P0
PART #595
TASK #1275
PR = -0.023
0751S0
PART #596
c

FIGURE 88b

III 1 5 89 TASK #1276 NETWORK - 76B00 -- -

SUBTASK	PROB	PERSONNEL TEAM 1 TYP	TEAM 1 #	TEAM 2 TYP	TEAM 2 #	AGE #1	AGE #2	PART NO.	TIME	DIS
1277	.144	85	2	--	--	--	--	--	60	0
1278	.235	85	2	--	--	--	--	--	60	0
1279	.660	85	2	--	--	60	--	--	102	0
1280	-.997	85	2	--	--	--	--	--	108	0
1281	- 003	2	1	--	--	--	--	--	132	0
1282	- 008	--	--	--	--	--	--	597	--	0
1283	-.033	85	1	--	--	--	--	598	--	0
1284	.054	--	--	--	--	--	--	599	--	0
1285	- 035	85	1	--	--	--	--	600	--	0
1286	- 007	85	1	--	--	--	--	601	--	0
1287	- 014	85	1	--	--	--	--	602	--	0
1288	- 014	85	2	--	--	--	--	603	--	0
1289	- 025	85	2	--	--	--	--	604	--	0
1290	- 040	85	2	--	--	--	--	605	--	0
1291	-.010	85	2	--	--	--	--	606	--	0
1292	-.017	85	2	--	--	--	--	607	--	0
1293	-.001	85	2	--	--	--	--	608	--	0
1294	-.027	85	2	--	--	--	--	609	--	0
1295	-.032	85	2	--	--	--	--	610	--	0
1296	- 009	85	2	--	--	--	--	611	--	0
1297	-.018	85	2	--	--	--	--	612	--	0
1298	-.030	85	2	--	--	--	--	613	--	0
1299	-.037	85	2	--	--	--	--	614	--	0
1300	-.006	--	--	--	--	--	--	615	--	0
1301	- 014	85	2	--	--	--	--	616	--	0
1302	-.002	--	--	--	--	--	--	617	--	0

TOTAL NUMBER OF SUBTASKS = 26

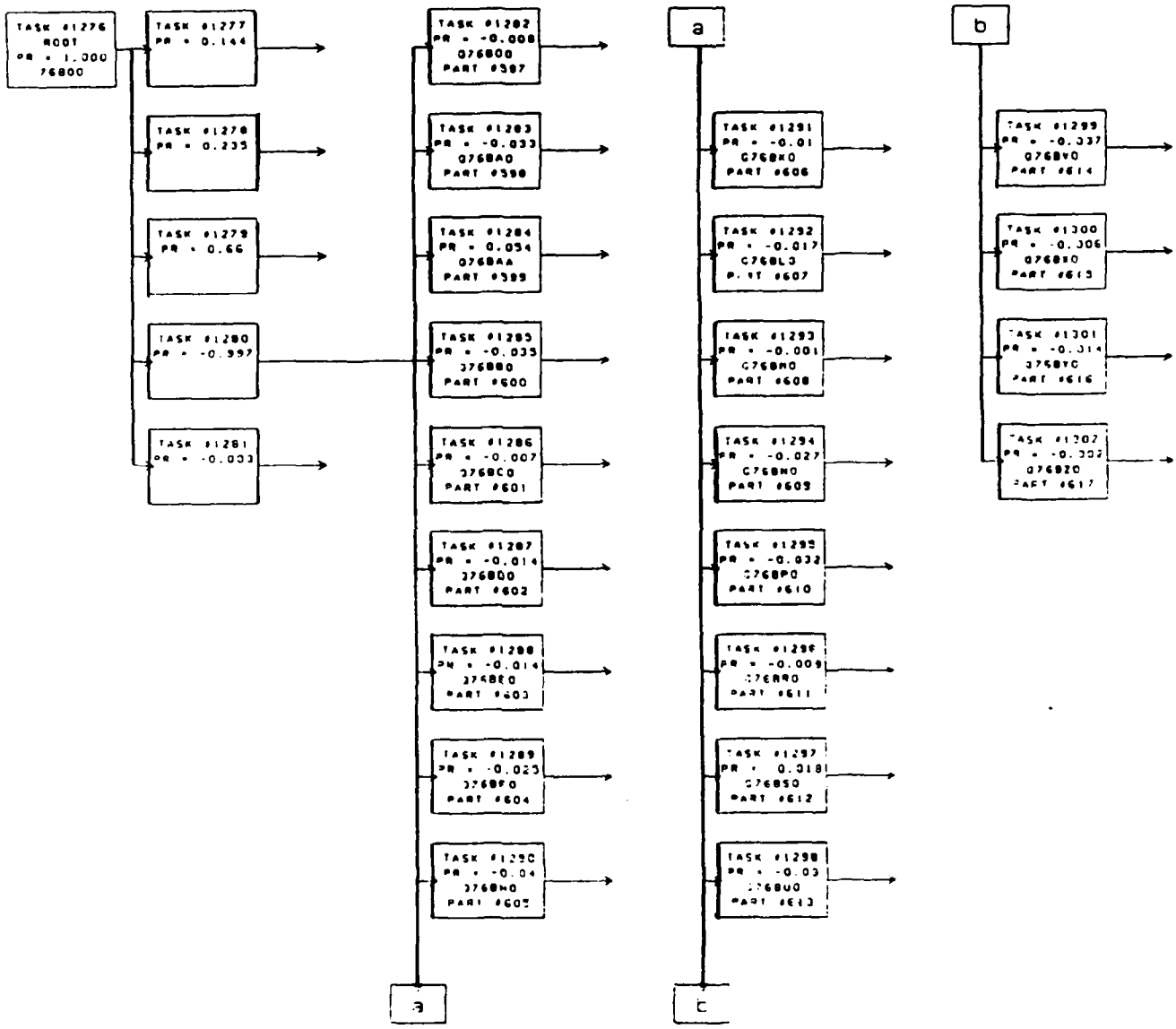
TASK #1276
ROOT
PR = 1.000
76800
TASK #1277
PR = 0.144
TASK #1278
PR = 0.235
TASK #1279
PR = 0.66
TASK #1280
PR = -0.997
TASK #1281
PR = -0.033
TASK #1282
PR = -0.008
TASK #1283
PR = -0.033
TASK #1284
PR = 0.054
TASK #1285
PR = -0.035
TASK #1286
PR = -0.007
TASK #1287
PR = -0.014
TASK #1288
PR = -0.014
TASK #1289
PR = -0.023
TASK #1290
PR = -0.04
a
TASK #1291
PR = -0.01
TASK #1292
PR = -0.017
TASK #1293
PR = -0.001
TASK #1294
PR = -0.027
TASK #1295
PR = -0.032
TASK #1296
PR = -0.009
TASK #1297
PR = 0.018
TASK #1298
PR = -0.03
b
TASK #1299
PR = -0.337
TASK #1300
PR = -0.306
TASK #1301
PR = -0.314
TASK #1302
PR = -0.302
a
c

FIGURE 89

III 1.5.90 TASK #1303 NETWORK - 23000 --BASIC J79 TURBO JET ENGINE -

SUBTASK	PROB	PERSONNEL TEAM 1 TYP	TEAM 1 #	TEAM 2 TYP	TEAM 2 #	AGE #1	AGE #2	PART NO.	TIME	DIS
1304	-.238	7	4	--	--	--	--	--	120	0
1305	1.000	7	3	--	--	--	--	--	60	5
1306	-.222	7	4	--	--	--	--	--	81	1
1307	.083	7	2	--	--	2	--	--	24	0
1308	-.115	7	2	6	2	--	--	--	18	0
1309	.440	3	2	--	--	--	--	--	36	5
1310	-.113	7	2	9	2	--	--	--	24	5
1311	-.067	7	2	9	2	--	--	--	18	5
1312	-.070	7	2	18	1	--	--	--	12	0
1313	.165	18	1	--	--	--	--	--	24	5
1314	-.063	7	2	21	2	--	--	--	84	0
1315	.075	21	2	--	--	--	--	--	12	0
1316	-.006	7	2	26	1	--	--	--	57	6
1317	-.006	7	2	2	1	--	--	--	78	0
1318	.222	2	1	--	--	--	--	--	12	0
1319	-.004	7	2	3	2	--	--	--	105	5
1320	-.003	7	2	6	2	--	--	--	18	0
1321	.500	6	2	--	--	--	--	--	3	0
1322	-.003	7	2	--	--	--	--	--	93	1
1323	-.003	7	2	21	2	--	--	--	342	1
1324	-.001	7	2	9	2	--	--	--	78	0
1325	-.020	7	4	--	--	--	--	--	66	0
1326	-.015	7	2	9	2	--	--	--	42	0
1327	-.006	7	2	1	1	--	--	--	63	6
1328	-.005	7	2	3	2	--	--	--	60	0
1329	-.001	7	2	9	1	--	--	--	60	0
1330	-.001	7	2	3	1	--	--	--	114	0
1331	-.001	7	2	4	2	--	--	--	48	0
1332	-.001	7	3	18	1	--	--	--	186	0
1333	-.001	7	3	21	2	--	--	--	210	0
1334	-.001	7	3	--	--	--	--	--	264	0
1335	-.001	7	2	1	2	--	--	--	84	0
1335	-.001	7	2	1	2	--	--	--	84	0
1336	-.005	7	2	1	1	--	--	--	66	0
1337	-.004	7	3	9	2	73	--	--	60	0
1338	-.001	7	3	3	2	--	--	--	204	0
1339	-.001	7	4	18	1	--	--	--	210	0
1340	-.001	7	4	1	2	--	--	--	300	0
1341	-.001	7	3	--	--	--	--	--	654	0
1342	-.190	--	--	--	--	--	--	--	--	0
1343	1.000	7	4	--	--	75	--	638	444	0
1344	1.000	1	6	--	--	--	--	--	438	0
1345	-.810	7	2	1	2	--	--	--	60	0
1346	-.250	--	--	--	--	--	--	639	--	0
1347	-.180	--	--	--	--	--	--	640	--	0
1348	-.500	--	--	--	--	--	--	644	--	0
1349	-.070	--	--	--	--	--	--	649	--	0

TOTAL NUMBER OF SUBTASKS = 47

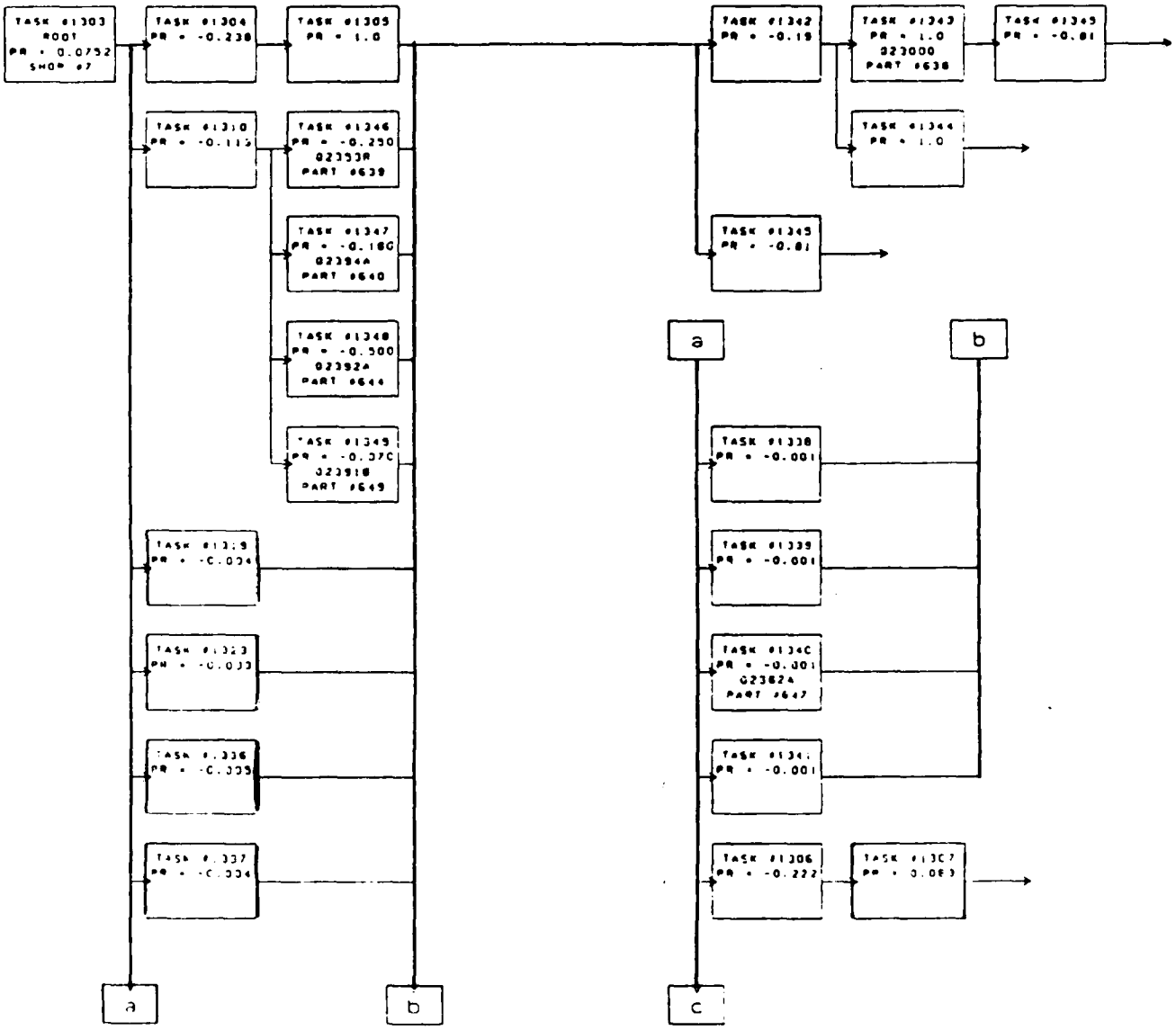
TASK #1303
ROOT
PR = 0.0752
SHOP #7
TASK #1304
PR = -0.238
TASK #1305
PR = 1.0
TASK #1342
PR = -0.19
TASK #1343
PR = 1.0
023000
PART #638
TASK #1345
PR = -0.81
TASK #1310
PR = -0.115
TASK #1346
PR = -0.250
023538
PART #639
TASK #1344
PR = 1.0
TASK #1347
PR = -0.180
023944
PART #640
TASK #1345
PR = -0.81
TASK #1348
PR = -0.500
023924
PART #644
TASK #1349
PR = -0.370
023918
PART #649
a
b
TASK #1338
PR = -0.001
TASK #1339
PR = -0.001
TASK #1340
PR = -0.001
023624
PART #647
TASK #1341
PR = -0.001
TASK #1306
PR = -0.222
TASK #1307
PR = 0.083
a
b
c

FIGURE 90a

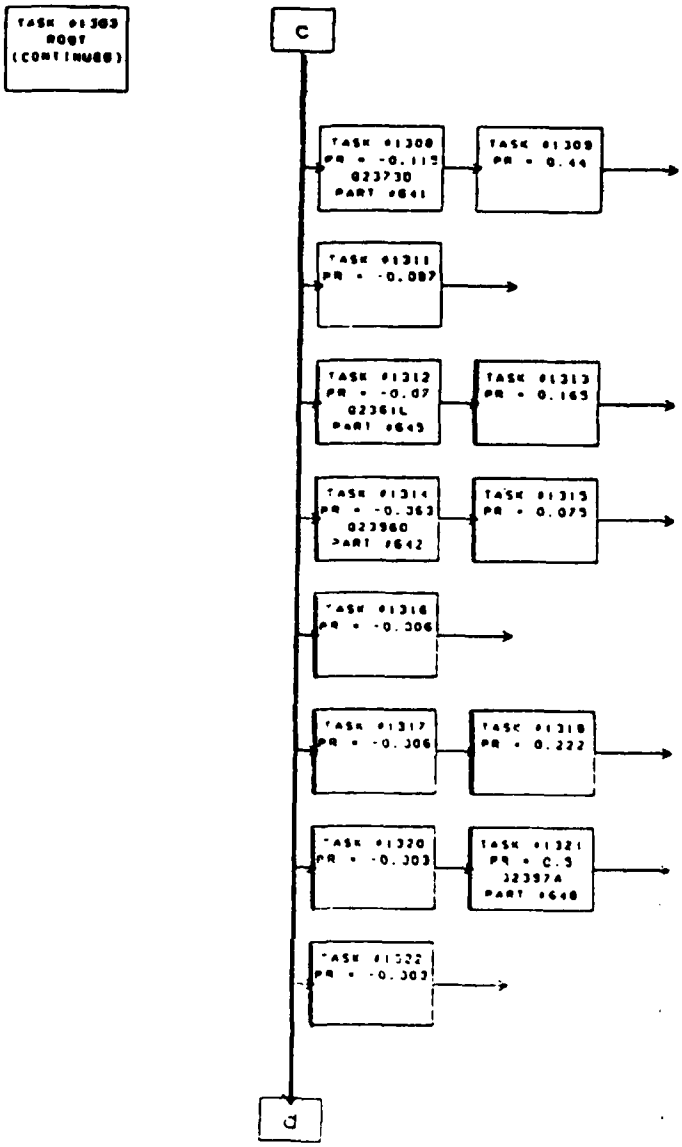
TASK #1303
ROOT
(CONTINUED)
C
TASK #1308
PR = -0.115
023730
PART #641
TASK #1309
PR = 0.44
TASK #1311
PR = -0.087
TASK #1312
PR = -0.07
023611L
PART #645
TASK #1313
PR = 0.165
TASK #1314
PR = -0.363
023960
PART #642
TASK #1315
PR = 0.075
TASK #1316
PR = -0.306
TASK #1317
PR = -0.306
TASK #1318
PR = 0.222
TASK #1320
PR = -0.303
TASK #1321
PR = 0.5
32397A
PART #648
TASK #1322
PR = -0.303
d

FIGURE 90b

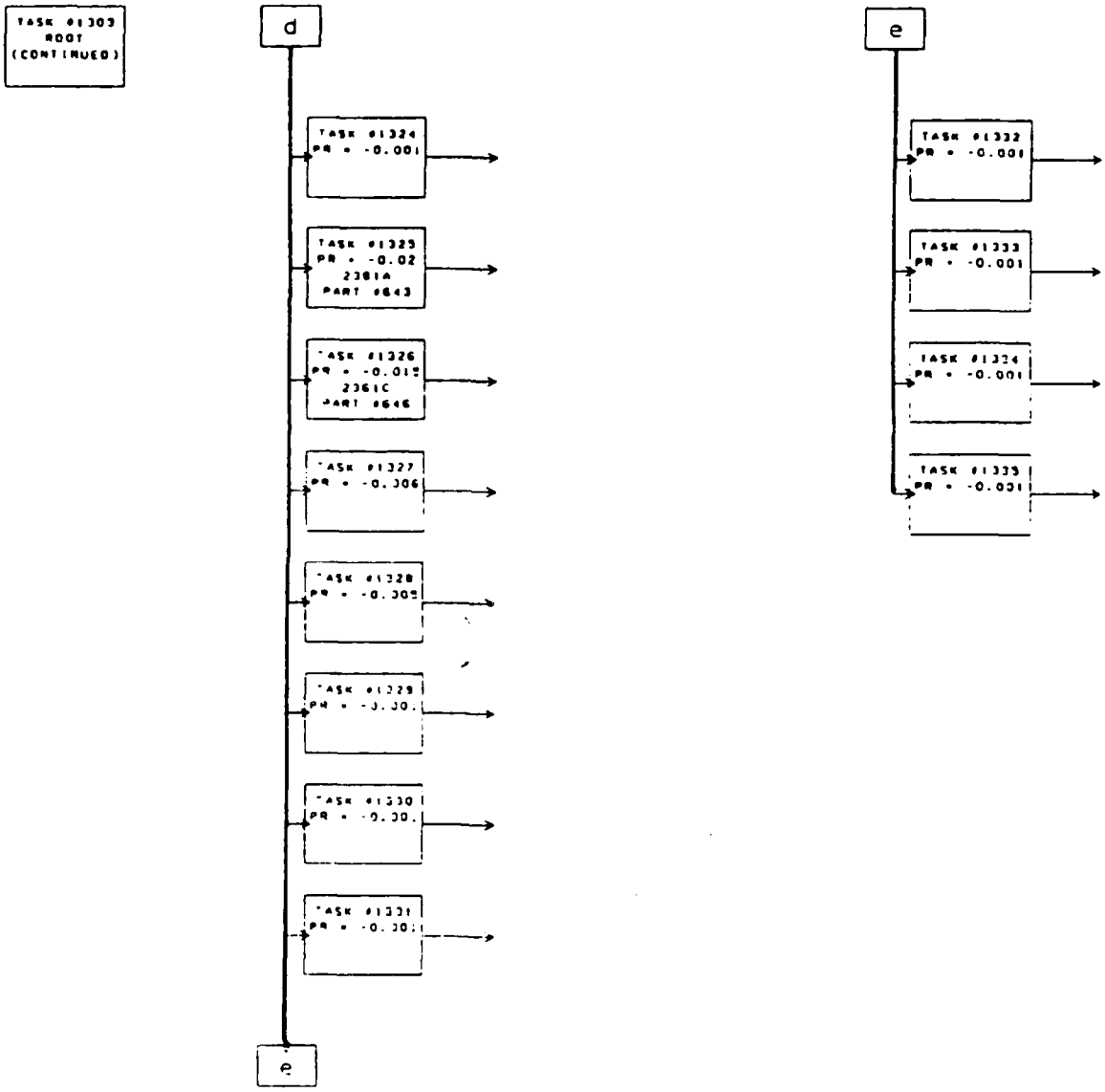
TASK #1303
ROOT
(CONTINUED)
d
TASK #1324
PR = -0.001
TASK #1325
PR = -0.02
2381A
PART #643
TASK #1326
PR = -0.015
2361C
PART #646
TASK #1327
PR = -0.306
TASK #1328
PR = -0.305
TASK #1329
TASK #1330
TASK #1331
e
e
TASK #1332
PR = -0.001
TASK #1333
PR = -0.001
TASK #1334
PR = -0.001
TASK #1335
PR = -0.001

FIGURE 90c

III.1.5.91 SIMPLE TASKS - 1400, 1401, 1402, 1403, 1404, AND 1405 -

		PERSONNEL									
		TEAM 1		TEAM 2		AGE		PART			
SUBTASK	PROB	TYP	#	TYP	#	#1	#2	NO	TIME	DIS	DESCRIPTION
1400	SCHED	1	2	--	--	80	--	--	15	--	REFUEL
1401	SCHED	1	2	--	--	--	--	--	6	--	SHELTER A/C
1402	SCHED	1	2	--	--	--	--	--	18	--	THRU FLIGHT
1403	SCHED	1	2	--	--	--	--	12916	15	--	LOAD GUNS
1404	SCHED	1	2	--	--	1	--	--	15	--	HOT-PIT
1405	SCHED	1	2	--	--	--	--	--	30	--	DECONTAMINA

** THESE ARE SIMPLE TASKS, THEREFORE NO NETWORKS WILL FOLLOW

III 1 5 92 TASK #1411 NETWORK -- BATTLE DAMAGE REPAIR -

		PERSONNEL								
		TEAM 1		TEAM 2		AGE		PART		
SUBTASK	PROB	TYP	#	TYP	#	#1	#2	NO.	TIME	DIS
1420	1.000	1	2	--	--	--	--	--	555	0
1421	.126	1	2	--	--	--	--	--	2040	0
1422	.163	7	3	--	--	--	--	--	795	0
1423	.153	1	2	--	--	--	--	--	330	0
1424	.047	1	2	--	--	--	--	--	2340	0
1425	.140	1	2	--	--	--	--	--	330	0
1426	.042	1	2	--	--	--	--	--	1320	0
1427	.032	1	2	--	--	--	--	--	330	0

TOTAL NUMBER OF SUBTASKS = 8

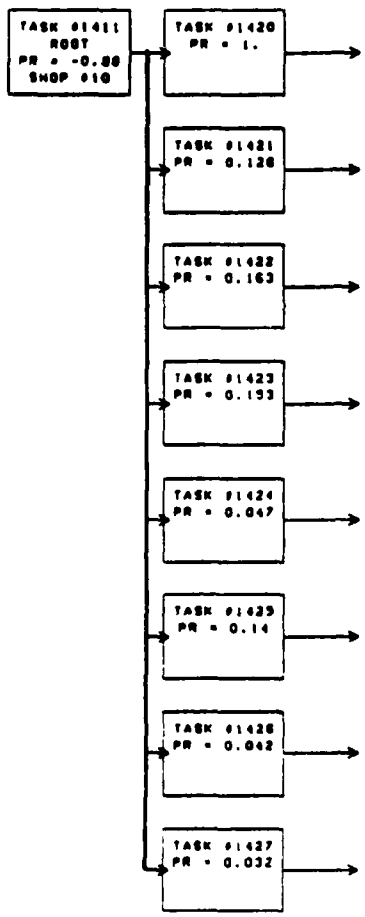

FIGURE 91

III 1.5.93 TASK #1412 NETWORK -- BATTLE DAMAGE REPAIR -

SUBTASK	PROB	PERSONNEL TEAM 1 TYP	TEAM 1 #	TEAM 2 TYP	TEAM 2 #	AGE #1	AGE #2	PART NO.	TIME	DIS
1430	1.000	1	2	--	--	--	--	--	1410	0
1431	.182	1	2	--	--	--	--	--	1845	0
1432	.255	7	3	--	--	--	--	--	6990	0
1433	.309	1	2	--	--	--	--	--	330	0
1434	.309	1	4	--	--	--	--	--	9750	0
1435	.091	1	2	--	--	--	--	--	330	0
1436	.073	1	2	--	--	--	--	--	3450	0
1437	.055	1	2	--	--	--	--	--	330	0
1438	1.000	1	4	--	--	--	--	--	9750	0

TOTAL NUMBER OF SUBTASKS = 9

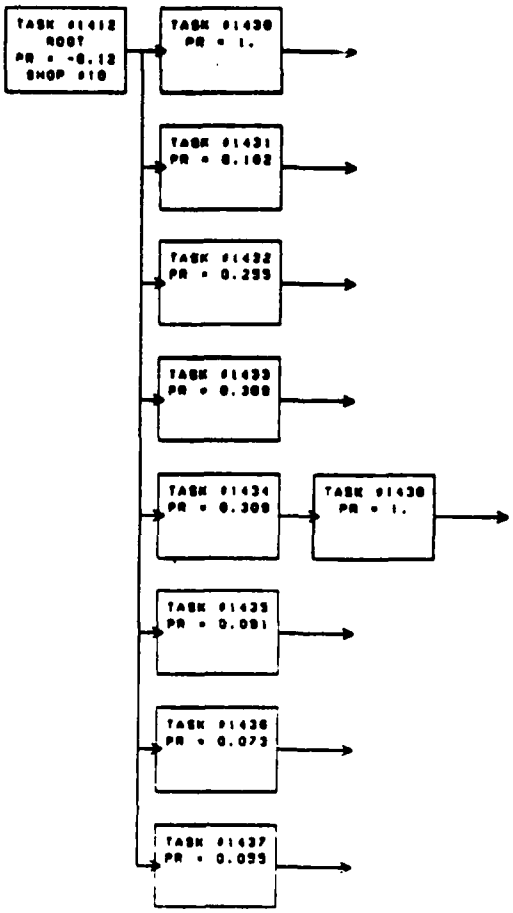

FIGURE 92

RESOURCE REQUIREMENTS
AIRCRAFT, PART AND SUPPORT EQUIPMENT REPAIR DATA

III 1.5 94 TASK #1441 NETWORK -- AIRBASE DAMAGED AIRCRAFT REPAIR -

SUBTASK	PROB	PERSONNEL TEAM #1 TYP	TEAM #1 #	TEAM #2 TYP	TEAM #2 #	AGE #1	AGE #2	PART TIME	DIS
1443	1.000	1	2	-	-	-	-	1200	3
1444	.252	1	2	-	-	-	-	2040	3
1445	.326	7	3	-	-	-	-	795	3
1446	.306	1	2	-	-	-	-	330	3
1447	.094	1	2	-	-	-	-	2340	3
1448	.280	1	2	-	-	-	-	330	3
1449	.084	1	2	-	-	-	-	1320	3
1450	.064	1	2	-	-	-	-	330	3

TOTAL NUMBER OF SUBTASKS = 8

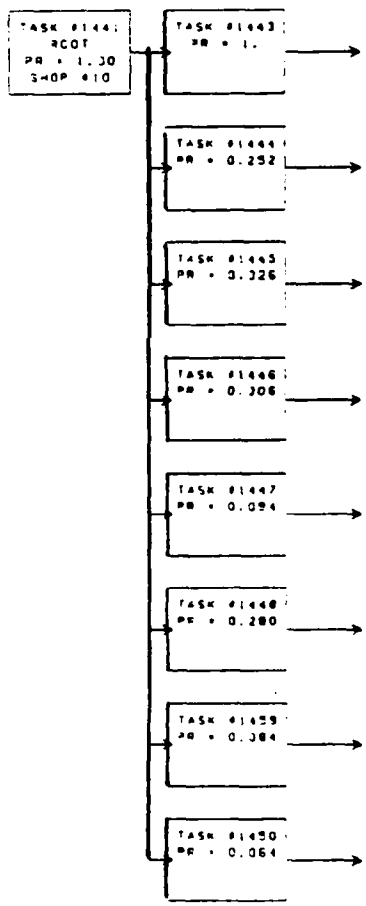

FIGURE 93

III 1.5 95 SIMPLE TASKS - 1501, 1502, 1503, 1504, 1505 -

		PERSONNEL									
		TEAM 1		TEAM 2		AGE		PART			
SUBTASK	PROB	TYP	#	TYP	#	#1	#2	NO.	TIME	DIS	DESCRIPTION
1501	SCHED	1	1	--	--	--	--	--	30	--	25 HR
1502	SCHED	1	1	--	--	--	--	--	30	--	50 HR
1503	SCHED	1	1	--	--	--	--	--	30	--	150 HR
1504	SCHED	1	1	--	--	--	--	--	30	--	300 HR
1505	SCHED	1	1	--	--	--	--	--	30	--	600 HR

** THESE ARE SIMPLE TASKS, THEREFORE NO NETWORKS WILL FOLLOW

III 1 6 AIRCRAFT BATTLE DAMAGE REPAIR

III 1.6.1 BATTLE DAMAGE TASK DATA (CARD TYPE #5 AND #15/2) -

TSAR TASK #1411 --- SHOP 10
TASK CRITICALITY = 33.

SUBTASK	PROB	PERSONNEL TEAM #1 TYP	TEAM #1 #	TEAM #2 TYP	TEAM #2 #	AGE #1	AGE #2	PART TIME	DIS
1420	1.000	1	2	-	-	-	-	555	3
1421	.126	1	2	-	-	-	-	2040	3
1422	.163	7	3	-	-	-	-	795	3
1423	.153	1	2	-	-	-	-	330	3
1424	.047	1	2	-	-	-	-	2340	3
1425	.140	1	2	-	-		-	330	3
1427	.042	1	2	-	-	-	-	1320	3
1428	.032	1	2	-	-	-	-	330	3

TOTAL NUMBER OF SUBTASKS = 8

TSAR TASK #1412 --- SHOP 10
TASK CRITICALITY = 33.

SUBTASK	PROB	PERSONNEL TEAM 1 TYP	TEAM 1 #	TEAM 2 TYP	TEAM 2 #	AGE #1	AGE #2	PART NO.	TIME	DIS
1430	1.000	1	2	0	0	0	0	0	1410	0
1431	.182	1	2	0	0	0	0	0	1845	0
1432	.255	7	3	0	0	0	0	0	6990	0
1433	.309	1	2	0	0	0	0	0	330	0
1434	.309	1	4	0	0	0	0	0	9750	0
1435	.091	1	2	0	0	0	0	0	330	0
1436	.073	1	2	0	0	0	0	0	3450	0
1437	.055	1	2	0	0	0	0	0	330	0
1438	1.000	1	4	0	0	0	0	0	9750	0

TOTAL NUMBER OF SUBTASKS = 9

III.1.6.2 AIRBASE DAMAGED AIRCRAFT TASK DATA (CARD TYPE #5 AND #15/2) -

TSAR TASK #1441 --- SHOP 1
TASK CRITICALITY = 33.

		PERSONNEL							
		TEAM #1		TEAM #2		AGE		PART	
SUBTASK	PROB	TYP	#	TYP	#	#1	#2	TIME	DIS
1443	1.000	1	2	-	-	-	-	1200	3
1444	.252	1	2	-	-	-	-	2040	3
1445	.326	7	3	-	-	-	-	795	3
1446	.306	1	2	-	-	-	-	330	3
1447	.094	1	2	-	-	-	-	2340	3
1448	.280	1	2	-	-	-	-	330	3
1449	.084	1	2	-	-	-	-	1320	3
1450	.064	1	2	-	-	-	-	330	3

TOTAL NUMBER OF SUBTASKS = 8

III 1 7 PART REPAIR DATA (CARD TYPES #8/1, #8/2, AND #8/3)

III 1.7 1 LRU #2 - 111AA -- RADOME, NOSE -

RP. NO.	TIME MIN	PERSONNEL TYPE	PERSONNEL NO	AGE #1	AGE #2	ITEM PROB
415	522	82	2	--	--	.50
416	480	--	--	--	--	.50

TOTAL NUMBER OF PART REPAIR PROCEDURES = 2

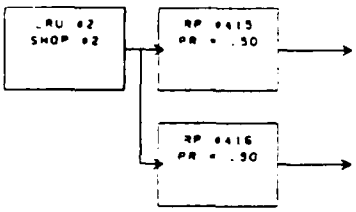

FIGURE 94

III 1 7.2 SIMPLE PART REPAIR TASK #3 -

LRU #	DESCRIPTION	SHOP	TIME MIN	PERSONNEL TYPE	PERSONNEL NO	AGE #1	AGE #2
3	FAIRING,MUZZLE BLAST	2	282	82	1	--	--

** THIS IS A SIMPLE REPAIR PROC., THEREFORE NO NETWORK WILL FOLLOW

III 1.7.3 LRU #4 - 111BM -- FAIRING, FORWARD NOSE LAND GEAR -

RP NO.	TIME MIN.	PERSONNEL TYPE	PERSONNEL NO	AGE #1	AGE #2	ITEM PROB
417	222	82	1	--	--	.50
418	240	--	--	--	--	.50

TOTAL NUMBER OF PART REPAIR PROCEDURES = 2

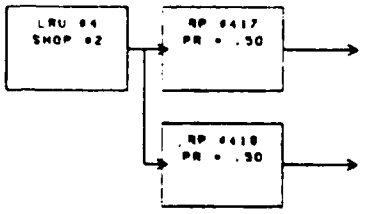

FIGURE 95

III 1.7.4 SIMPLE REPAIR TASKS #5 - #35 -

LRU #	DESCRIPTION	SHOP	TIME MIN.	PERSONNEL TYPE	PERSONNEL NO.	AGE #1	AGE #2
5	Q111BQ	2	222	82	1	--	--
6	DOOR, HYDRAUL ACCESS	2	342	82	2	--	--
7	Q111CA	2	222	82	1	--	--
8	DOOR, DATA LINK ACC	2	432	82	1	--	--
9	DOOR, (26 L/R)	2	132	82	1	--	--
10	SEAL ASSY,AFT MISSILE	2	150	82	1	--	--
11	FAIR ASSY,AFT ENGINE	2	222	82	1	--	--
12	FAIR ASSY,AFT MISSILE	2	288	82	1	--	--
13	DOOR (39 R)	2	162	82	1	--	--
14	AIR, CENTER STORES	2	480	82	1	--	--
18	DOOR, (73 L/R)	2	162	82	1	--	--
19	DOOR, (82 L/R)	2	300	82	1	--	--
20	DOOR, (83 L/R)	2	282	82	1	--	--
21	DOOR, (92 L/R)	2	480	82	1	--	--
22	DOOR, (81 L/R)	2	288	82	1	--	--
23	DOOR, (96 L/R)	2	390	82	1	--	--
24	DOOR, (37 L/R)	2	192	82	1	--	--
25	DOOR, (38 L/R)	2	192	82	1	--	--
26	DOOR, (54 L/R)	2	162	82	1	--	--
27	DOOR, (80)	2	192	82	1	--	--
28	TAIL CONE	2	378	82	2	--	--
29	PANEL, JET BLAST #1	2	72	82	1	--	--
30	PANEL, JET BLAST #2	2	72	82	1	--	--
31	PANEL, JET BLAST #3	2	288	82	1	--	--
32	PANEL, JET BLAST #4	2	432	82	1	--	--
33	PANEL, JET BLAST #5	2	72	82	1	--	--
34	PANEL,JET BLAST TAIL	2	366	82	1	--	--
35	DOOR (75 L/R)	2	162	82	1	--	--

** THESE ARE SIMPLE REPAIR PROCED., THEREFORE NO NETWORKS FOLLOW

III 1.7.5 LRU #36 - 1122L -- DOOR (141 L/R) -

RP NO.	TIME MIN.	PERSONNEL TYPE	PERSONNEL NO	AGE #1	AGE #2	ITEM PROB
419	522	82	1	--	--	1.00
420	240	--	--	--	--	1.00

TOTAL NUMBER OF PART REPAIR PROCEDURES = 2

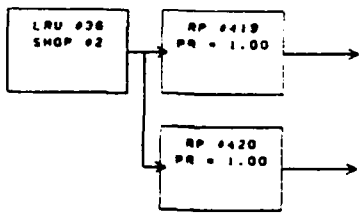

FIGURE 96

III.1.7.6 SIMPLE REPAIR TASK #37 -

LRU #	DESCRIPTION	SHOP	TIME MIN.	PERSONNEL TYPE	PERSONNEL NO.	AGE #1	AGE #2
37	WING TIP ASSY, FOR	2	222	82	1	--	--

** THIS IS A SIMPLE REPAIR PROC., THEREFORE NO NETWORK WILL FOLLOW

III 1.7.7 LRU #38 - 1128L -- DOOR, (141 L/R) -

RP NO	TIME MIN.	PERSONNEL TYPE	NO	AGE #1	#2	ITEM PROB
421	474	82	1	--	--	.50
422	240	--	--	--	--	.50

TOTAL NUMBER OF PART REPAIR PROCEDURES = 2

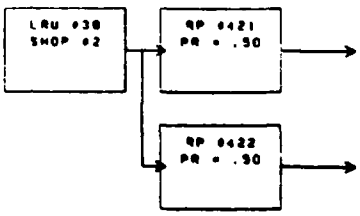

FIGURE 97

III.1.7.8 SIMPLE REPAIR TASKS #39 - #45 -

LRU #	DESCRIPTION	SHOP	TIME MIN.	PERSONNEL TYPE	NO.	AGE #1	#2
39	VALVE, SERVO, L/R	6	102	86	1	--	--
40	RING ASSY,BELLMOUTH	2	102	82	1	--	--
41	ACTUATOR, BYPASS BELL	6	252	86	1	--	--
42	CYLIND ASSY ACTUATOR	6	339	86	2	--	--
43	VALVE ASSY, AUX AIR	6	498	86	2	--	--
44	PANEL PEDEST.COCKPIT	2	222	82	1	--	--
45	STOWAGE CASE	2	180	82	1	--	--

** THESE ARE SIMPLE REPAIR PROCED., THEREFORE NO NETWORKS FOLLOW

III.1.7.9 LRU #46 - 1212F -- FOOT RAMP ASSEMBLY -

RP NO.	TIME MIN.	PERSONNEL TYPE	PERSONNEL NO	AGE #1	AGE #2	ITEM PROB
423	252	82	1	--	--	.50
424	480	--	--	--	--	.50

TOTAL NUMBER OF PART REPAIR PROCEDURES = 2

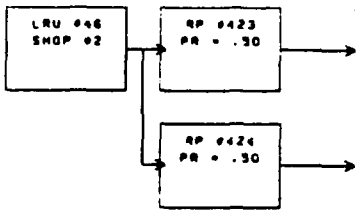

FIGURE 98

III.1.7.10 SIMPLE REPAIR TASKS #47, #48 -

LRU #	DESCRIPTION	SHOP	TIME MIN.	PERSONNEL TYPE	PERSONNEL NO.	AGE #1	AGE #2
47	FLOOR AND PANELS	2	162	82	1	--	--
48	CONTAIN. DROGUE	2	210	82	1	--	--

** THESE ARE SIMPLE REPAIR PROCED., THEREFORE NO NETWORKS FOLLOW

III.1 7.11 LRU #49 - 1231E -- VALVE, PNEUMATIC SELECTOR -

RP NO.	TIME MIN	PERSONNEL TYPE	NO	AGE #1	#2	ITEM PROB
425	100	86	2	--	--	1.00
426	252	86	2	--	--	1.00

TOTAL NUMBER OF PART REPAIR PROCEDURES = 2

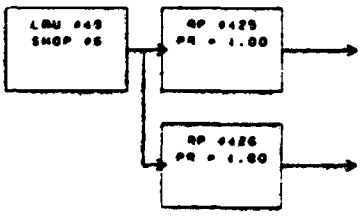

FIGURE 99

III.1 7.12 SIMPLE REPAIR TASKS #50 - #55 -

LRU #	DESCRIPTION	SHOP	TIME MIN.	PERSONNEL TYPE	NO.	AGE #1	#2
50	CANOPY, STOR BOTTLE	6	240	86	2	--	--
51	CYLIND. CANOPY PNEUM	6	156	86	2	--	--
52	CANOPY VISCOUS DAMP	6	348	86	2	--	--
53	DUMP VALVE, EMERGENCY	6	252	86	2	--	--
54	PNEUM BOTTLE, EMERG	6	282	86	2	--	--
55	AFT CANOPY ASSY	2	222	82	2	--	--

** THESE ARE SIMPLE REPAIR PROCED., THEREFORE NO NETWORKS FOLLOW

III 1 7 13 LRU #56 - 1236K -- PNEUMATIC CYLINDER, AFT -

RP NO	TIME MIN	PERSONNEL TYPE	NO	AGE #1	#2	ITEM PROB
427	243	86	2	--	--	.82
428	114	82	1	--	--	.18

TOTAL NUMBER OF PART REPAIR PROCEDURES = 2

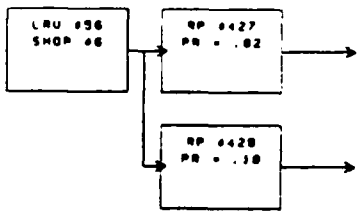

FIGURE 100

III 1 7 14 SIMPLE REPAIR TASKS #57 - #67 -

LRU #	DESCRIPTION	SHOP	TIME MIN.	PERSONNEL TYPE	NO.	AGE #1	#2
57	CANOPY VISCOUS, AFT	6	249	86	2	--	--
58	DUMP VALVE, AFT	6	252	86	2	--	--
59	PNEUM BOTTLE AFT	6	396	86	2	--	--
60	SWIVELS, LAND GEAR	6	84	86	2	--	--
61	VALVE SELECTOR	6	240	86	2	--	--
62	BOTTLE, AIR EMERG	6	330	86	2	--	--
63	SHOCK STRUT, MLG	6	414	86	2	--	--
64	CYLIND, UPLOCK MLG	6	141	86	2	--	--
65	SIDE BRACE ACT, MLG	6	312	86	2	--	--
66	LAND GEAR (LEFT)	6	210	86	2	--	--
67	SHOCK STRUT, MLG LEFT	6	192	86	2	--	--

** THESE ARE SIMPLE REPAIR PROCED., THEREFORE NO NETWORKS FOLLOW

III.1.7.15 LRU #68 - 1322M -- SIDE BRACE ACTUATOR,LEFT LAND GEAR -

RP NO	TIME MIN.	PERSONNEL TYPE	PERSONNEL NO	AGE #1	AGE #2	ITEM PROB
429	132	86	2	--	--	1.00
430	312	86	2	--	--	1.00

TOTAL NUMBER OF PART REPAIR PROCEDURES = 2

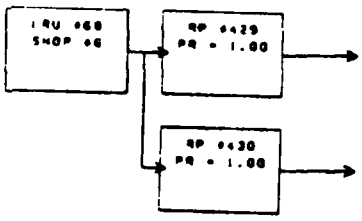

FIGURE 101

III.1.7.16 SIMPLE REPAIR TASKS #69 - #80 -

LRU #	DESCRIPTION	SHOP	TIME MIN.	PERSONNEL TYPE	PERSONNEL NO.	AGE #1	AGE #2
69	MLG DOORS (RIGHT)	2	252	82	1	--	--
70	CYLIND. HYDRAUL (RT)	6	162	86	2	--	--
71	DOOR ASSY. GEAR (RT)	2	378	82	1	--	--
72	DOOR ASSY. OUT (RT)	2	378	82	1	--	--
73	DOOR ASSY. IN (RT)	2	222	82	1	--	--
74	MLG DOORS (LEFT)	2	390	82	1	--	--
75	NOSE GEAR DOOR	2	414	82	1	--	--
76	DOOR, NLG, FORWARD	2	252	82	1	--	--
77	NOSE STEER COMPENSAT	6	189	86	2	--	--
78	POWER UNIT, STEER	6	120	86	2	--	--
79	VALVE, NOSE GEAR STR	6	372	86	2	--	--
80	VALVE, BRAKE CONTROL	6	204	86	2	--	--

** THESE ARE SIMPLE REPAIR PROCED., THEREFORE NO NETWORKS FOLLOW

III 1 7 17 LRU #81 -1342E -- BRAKE VALVE, MANUAL CONTROL -

RP NO	TIME MIN.	PERSONNEL TYPE	NO	AGE #1	#2	ITEM PROB
431	126	86	2	--	--	1.00
432	354	86	2	--	--	1.00

TOTAL NUMBER OF PART REPAIR PROCEDURES = 2

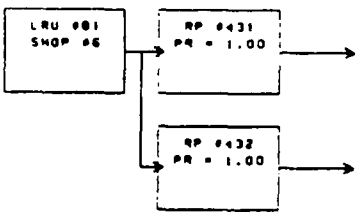

FIGURE 102

III 1 7 18 SIMPLE REPAIR TASKS #82 - #93 -

LRU #	DESCRIPTION	SHOP	TIME MIN.	PERSONNEL TYPE	NO.	AGE #1	#2
82	ACCUM. EMERG BRAKE	6	288	86	2	--	--
83	VALVE, ANTI-SKID	6	132	86	2	--	--
84	CNTL BOX, ANTI-SKID	3	72	83	1	--	--
85	ANTI-SKID SENSOR	3	66	83	1	--	--
86	BRAKE ASSEMBLY	6	252	86	2	--	--
87	PRESSURE PLATE ASSY	2	120	82	1	--	--
88	VALVE, SHUTTLE,BRAKE	2	102	82	1	--	--
90	HOUSING, BRAKE ASSY	6	402	86	2	--	--
91	BACKING PLATE,BRAKE	2	474	82	1	--	--
92	ACTUAT CYLIND,ARREST	6	312	86	2	--	--
93	ARREST GEAR FAIR ASSY	2	318	82	1	--	--

** THESE ARE SIMPLE REPAIR PROCED., THEREFORE NO NETWORKS FOLLOW

III.1.7.19 LRU #94 - 14200 -- LATERAL CONTROL SYSTEM -

RP. NO	TIME MIN	PERSONNEL TYPE	PERSONNEL NO	AGE #1	AGE #2	ITEM PROB
433	66	83	1	--	--	1.00
434	132	83	1	--	--	1.00

TOTAL NUMBER OF PART REPAIR PROCEDURES = 2

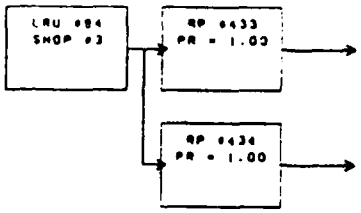

FIGURE 103

III.1.7.20 SIMPLE REPAIR TASKS #95 - #97 -

LRU #	DESCRIPTION	SHOP	TIME MIN	PERSONNEL TYPE	PERSONNEL NO.	AGE #1	AGE #2
95	AILERON ASSY	2	384	82	2	--	--
96	L-H AILERON VISCOUS	6	240	86	2	--	--
97	AILERON POWER CNTL	6	180	86	2	--	--

** THESE ARE SIMPLE REPAIR PROCED.. THEREFORE NO NETWORKS FOLLOW

III 1 7 21 LRU #98 - 1425E -- OUTBOARD SPOILER POWER CYLINDER -

RP NO	TIME MIN	PERSONNEL TYPE	NO	AGE #1	#2	ITEM PROB
435	108	86	2	--	--	1.00
436	222	86	2	--	--	1.00

TOTAL NUMBER OF PART REPAIR PROCEDURES = 2

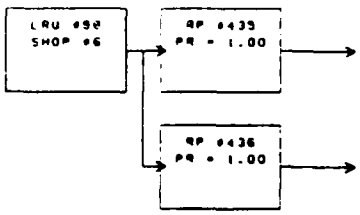

FIGURE 104

III 1 7 22 LRU #99 - 1425D -- INBOARD SPOILER POWER CYLINDER -

RP NO	TIME MIN	PERSONNEL TYPE	NO	AGE #1	#2	ITEM PROB
437	132	86	2	--	--	1.00
438	252	86	2	--	--	1.00

TOTAL NUMBER OF PART REPAIR PROCEDURES = 2

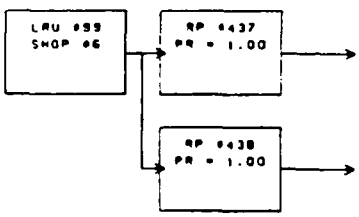

FIGURE 105

III 1.7.23 SIMPLE REPAIR TASKS #100 - #110 -

LRU #	DESCRIPTION	SHOP	TIME MIN.	PERSONNEL TYPE	PERSONNEL NO	AGE #1	AGE #2
100	LATERAL SERVO ACT	6	288	86	2	--	--
101	STABILATOR CNTL SYS	6	234	86	2	--	--
102	AUX POWER UNIT, HYDR	6	174	86	2	--	--
103	MANIFOLD,AUX PWR SYS	6	222	86	2	--	--
104	RUDDER	2	294	82	2	--	--
105	HORN, RUDDER	2	372	82	1	--	--
106	SERVO ACTUATOR,AILER	6	120	86	2	--	--
107	CYLIND, POWER CNTL	6	162	86	2	--	--
108	HYDRAUL DAMPER,RUDDER	6	262	86	2	--	--
109	ROTARY DAMPER,RUDDER	6	240	86	1	--	--
110	CYLINDER,PWR CNTL	6	132	86	2	--	--

** THESE ARE SIMPLE REPAIR PROCED., THEREFORE NO NETWORKS FOLLOW

III 1.7.24 LRU #111 - 1455E -- CYLINDER, TRAILING EDGE FLAP -

RP NO.	TIME MIN.	PERSONNEL TYPE	PERSONNEL NO	AGE #1	AGE #2	ITEM PROB
439	144	86	2	--	--	1.00
440	276	86	2	--	--	1.00

TOTAL NUMBER OF PART REPAIR PROCEDURES = 2

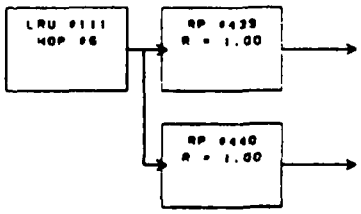

FIGURE 106

III.1.7.25 SIMPLE REPAIR TASKS #112 - #130 -

LRU #	DESCRIPTION	SHOP	TIME MIN.	PERSONNEL TYPE	PERSONNEL NO.	AGE #1	AGE #2
112	AIR SPEED SWITCH	9	87	89	1	--	--
113	AIR SELECTOR VALVE	6	282	86	2	--	--
114	AIR STORAGE BOTTLE	6	102	86	2	--	--
115	SPEED BRAKE	2	468	82	2	--	--
116	SPEED BRAKE,UP SKIN	2	270	82	1	--	--
117	CYLIND. PWR SPEED BRK	6	444	86	2	--	--
118	SWIVELS, HYDRAULIC	6	102	86	2	--	--
119	VALVE, SLAT POSIT SEL	6	207	86	2	--	--
120	CNTL UNIT ELECT SLATS	9	78	89	1	--	--
121	ACT. INBOARD SLAT	6	201	86	2	--	--
122	ACT. OUTBOARD SLAT	6	192	86	2	--	--
123	SWIVEL ASSEMBLY	6	102	86	2	--	--
124	COOLING TURBINE	4	78	84	1	--	--
125	CABIN MOISTURE SEPAR	4	72	84	1	--	--
126	CABIN ANTI-ICE CNTL	4	66	84	1	--	--
127	EQUIP HEAT EXCHANGER	4	96	84	1	--	--
128	EQUIP COOLING TURBINE	4	66	84	1	--	--
129	EJECTOR VALVE,GROUND	4	60	84	1	--	--
130	VALVE,TURBINE BY-PASS	4	60	84	1	--	--

** THESE ARE SIMPLE REPAIR PROCED., THEREFORE NO NETWORKS FOLLOW

III.1.7.26 LRU #131 - 4115A -- AIR FILTER, IN-LINE CADC -

RP. NO.	TIME MIN.	PERSONNEL TYPE	PERSONNEL NO	AGE #1	AGE #2	ITEM PROB
441	72	89	1	--	--	.98
442	78	88	1	--	--	.02

TOTAL NUMBER OF PART REPAIR PROCEDURES = 2

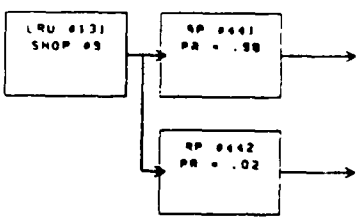

FIGURE 107

III.1.7.27 SIMPLE REPAIR TASK #132 -

LRU #	DESCRIPTION	SHOP	TIME MIN	PERSONNEL TYPE	PERSONNEL NO.	AGE #1	AGE #2
132	REGULATOR.CABIN PRESS	4	66	84	1	--	--

** THIS IS A SIMPLE REPAIR PROC., THEREFORE NO NETWORK WILL FOLLOW

III.1.7.28 LRU #133 - 42110 -- MISC RELAY PANEL NO 1 -

RP NO	TIME MIN	PERSONNEL TYPE	PERSONNEL NO	AGE #1	AGE #2	ITEM PROB
443	426	88	1	--	--	.06
444	666	--	--	--	--	.25
445	207	89	1	--	--	.17
446	273	27	2	--	--	.50

TOTAL NUMBER OF PART REPAIR PROCEDURES = 4

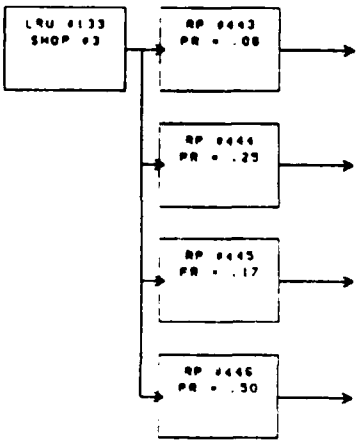

FIGURE 108

III 1 7 29 SIMPLE REPAIR TASK #134 -

LRU #	DESCRIPTION	SHOP	TIME MIN.	PERSONNEL TYPE	PERSONNEL NO.	AGE #1	AGE #2
134	WHEEL WELL SWTCH PAN	12	60	80	1	--	--

** THIS IS A SIMPLE REPAIR PROC., THEREFORE NO NETWORK WILL FOLLOW

III 1 7 30 LRU #135 - 42120 -- MISC RELAY PANEL NO.2 -

RP NO.	TIME MIN.	PERSONNEL TYPE	PERSONNEL NO	AGE #1	AGE #2	ITEM PROB
447	216	80	1	--	--	.05
448	195	27	2	--	--	.95

TOTAL NUMBER OF PART REPAIR PROCEDURES = 2

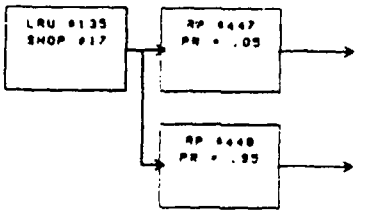

FIGURE 109

III 1 7 31 LRU #136 - 42130 -- MISC RELAY PANEL NO.3 -

RP NO	TIME MIN.	PERSONNEL TYPE	PERSONNEL NO	AGE #1	AGE #2	ITEM PROB
449	141	83	1	--	--	.60
450	180	27	2	--	--	.20
451	136	89	1	--	--	.20

TOTAL NUMBER OF PART REPAIR PROCEDURES = 3

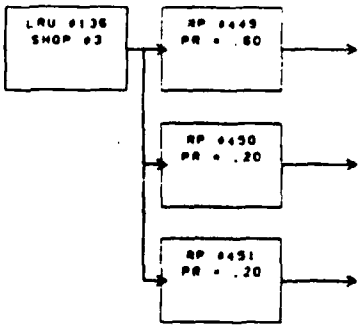

FIGURE 110

III 1 7 32 LRU #137 - 42140 -- MISC RELAY PANEL NO.4 -

RP NO.	TIME MIN.	PERSONNEL TYPE	PERSONNEL NO	AGE #1	AGE #2	ITEM PROB
452	264	89	1	--	--	.07
453	240	27	2	--	--	.93

TOTAL NUMBER OF PART REPAIR PROCEDURES = 2

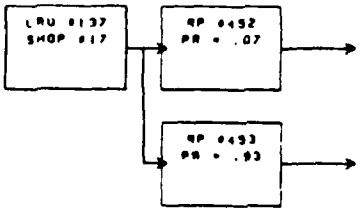

FIGURE 111

III.1.7.33 SIMPLE REPAIR TASKS #138 - #147 -

LRU #	DESCRIPTION	SHOP	TIME MIN.	PERSONNEL TYPE	PERSONNEL NO.	AGE #1	AGE #2
138	MISC RELAY PANEL #5	17	270	27	2	--	--
139	MISC RELAY PANEL #6	3	84	83	1	--	--
140	CIRCUIT BREAK PAN #1	3	102	83	1	--	--
141	NOC	8	162	88	1	--	--
142	FREQ & LOAD CNTL BOX	3	72	83	1	--	--
143	FREQ & LOAD CNTL BOX	3	72	83	1	--	--
144	BATTERY, NICKEL CAD	3	2202	83	2	--	--
145	GENERATOR, 30 KVA	3	225	83	1	--	--
146	SUPERVISORY PANEL	3	72	83	1	--	--
147	SUPERVISORY PANEL	3	72	83	1	--	--

** THESE ARE SIMPLE REPAIR PROCED., THEREFORE NO NETWORKS FOLLOW

III 1.7.34 LRU #146 - 44116 -- PANEL ASSY, INTERIOR COCKPIT -

RP. NO.	TIME MIN.	PERSONNEL TYPE	PERSONNEL NO	AGE #1	AGE #2	ITEM PROB
454	132	83	1	--	--	.33
455	78	89	1	--	--	.67

TOTAL NUMBER OF PART REPAIR PROCEDURES = 2

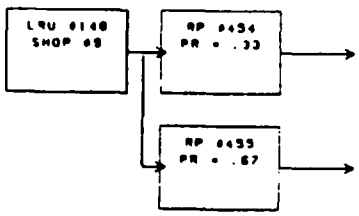

FIGURE 112

III.1.7.35 SIMPLE REPAIR TASK #149 -

LRU #	DESCRIPTION	SHOP	TIME MIN.	PERSONNEL TYPE	PERSONNEL NO.	AGE #1	AGE #2
149	MASTER CAUTION LIGHT	3	102	83	1	--	--

** THIS IS A SIMPLE REPAIR PROC., THEREFORE NO NETWORK WILL FOLLOW

III.1.7.36 LRU #150 - 4411K -- CONTROL PANEL CAUTION LIGHT -

RP. NO.	TIME MIN.	PERSONNEL TYPE	PERSONNEL NO	AGE #1	AGE #2	ITEM PROB
456	72	83	1	--	--	1.00
457	150	83	1	--	--	1.00

TOTAL NUMBER OF PART REPAIR PROCEDURES = 2

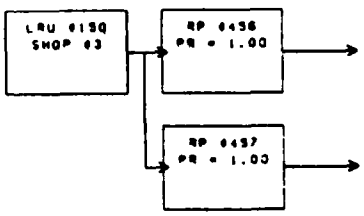

FIGURE 113

III.1.7.37 SIMPLE REPAIR TASKS #151 - #157 -

LRU #	DESCRIPTION	SHOP	TIME MIN.	PERSONNEL TYPE	PERSONNEL NO.	AGE #1	AGE #2
151	LIGHTS.COCKPIT FLOOD	3	72	83	1	--	--
152	PANEL, COCKPIT LIGHTS	3	150	83	1	--	--
153	FUSELAGE LIGHTS	3	84	83	1	--	--
154	WING TIP TAPE LIGHT	3	72	83	1	--	--
155	RESERVOIR.HYDRAU #1	6	132	86	2	--	--
156	PUMP.HYDRAULILC #1	6	249	86	2	--	--
157	INDICATOR.HYDRAU PRES	9	132	89	1	--	--

** THESE ARE SIMPLE REPAIR PROCED., THEREFORE NO NETWORKS FOLLOW

III.1.7.38 LRU #158 - 4512A -- RESERVOIR, HYDRAULIC NO.2 -

RP NO.	TIME MIN.	PERSONNEL TYPE	PERSONNEL NO	AGE #1	AGE #2	ITEM PROB
458	120	86	2	--	--	1.00
459	261	86	2	--	--	1.00

TOTAL NUMBER OF PART REPAIR PROCEDURES = 2

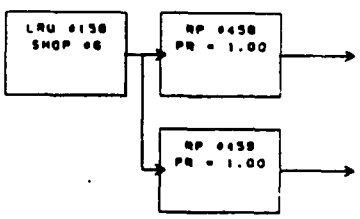

FIGURE 114

III 1.7.39 SIMPLE REPAIR TASK #159 -

LRU #	DESCRIPTION	SHOP	TIME MIN.	PERSONNEL TYPE	PERSONNEL NO.	AGE #1	AGE #2
159	PUMP,HYDRAULIC #2	6	360	86	2	--	--

** THIS IS A SIMPLE REPAIR PROC., THEREFORE NO NETWORK WILL FOLLOW

III 1.7.40 LRU #160 - 45134 -- RESERVOIR, UTILITY HYDRAULIC -

RP NO.	TIME MIN.	PERSONNEL TYPE	PERSONNEL NO	AGE #1	AGE #2	ITEM PROB
460	144	86	2	--	--	1.00
461	345	86	2	--	--	1.00

TOTAL NUMBER OF PART REPAIR PROCEDURES = 2

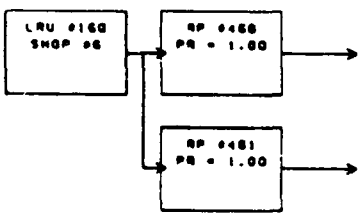

FIGURE 115

III 1.7.41 SIMPLE REPAIR TASKS #161 - #174 -

LRU #	DESCRIPTION	SHOP	TIME MIN.	PERSONNEL TYPE	PERSONNEL NO.	AGE #1	AGE #2
161	PUMP,HYDR GROUP 1	6	258	86	2	--	--
162	HYDR FLOW REGULATOR	6	108	86	2	--	--
163	PRESS INDICATOR,HYDR	9	66	89	1	--	--
164	PRESS TRANSMITT,HYDR	9	66	89	1	--	--
165	COMPRESS,HYDR DRIVEN	6	201	86	2	--	--
166	SEPARATOR,MOISTURE	6	120	86	2	--	--
167	PUMP,OIL,AIR COMPRESS	6	132	86	2	--	--
168	PYLON ASSEMBLY	2	282	82	1	--	--
169	AIR REFUEL ACT RECEPT	6	144	86	1	--	--
170	AIR REFUEL AMPLIFIER	3	54	83	1	--	--
171	FUEL INDICAT SYSTEM	9	138	89	1	--	--
172	INDICAT,FUEL QUANTITY	9	78	89	1	--	--
173	NOC	9	66	89	1	--	--
174	SIMULATOR,FUEL QUANT	9	78	89	1	--	--

** THESE ARE SIMPLE REPAIR PROCED., THEREFORE NO NETWORKS FOLLOW

III.1.7.42 LRU #175 - 471AA -- CONVERTER, LIQUID OXYGEN -

RP NO.	TIME MIN.	PERSONNEL TYPE	PERSONNEL NO	AGE #1	AGE #2	ITEM PROB
462	126	84	1	--	--	1.00
463	306	84	1	--	--	1.00

TOTAL NUMBER OF PART REPAIR PROCEDURES = 2

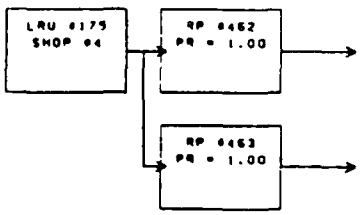

FIGURE 116

III.1.7.43 SIMPLE REPAIR TASKS #176 - #193 -

LRU #	DESCRIPTION	SHOP	TIME MIN.	PERSONNEL TYPE	PERSONNEL NO.	AGE #1	AGE #2
176	CONTAIN.LIQUID OXY	4	246	84	1	--	--
177	INDIC.OXYGEN QUANT	4	66	84	1	--	--
178	REGULAT.DILUTER DEMAN	4	66	84	1	--	--
179	WIRE HARNESS.CONVERT	4	213	84	1	--	--
180	REGULATOR.DILUTER DEM	4	66	84	1	--	--
181	ACCELEROMETER	9	84	89	1	--	--
182	AIR SPEED & MACH NUME	9	90	89	1	--	--
183	VERTICAL VELOCITY	9	78	89	1	--	--
184	TRUE AIR SPEED	9	78	89	1	--	--
185	ALTIMETER 325001	9	108	89	1	--	--
186	ALTIMETER A413221000 2	9	162	89	1	--	--
187	ALTIMETER A413221000 3	9	108	89	1	--	--
188	TUBE,PITOT STATIC	9	78	89	1	--	--
189	COMPASS, STANDBY	9	78	89	1	--	--
190	FLIGHT DIRECT GROUP	9	198	89	1	--	--
191	COMPUTER,FLIGHT CNTL	9	198	89	1	--	--
192	CNTL.ADJUSTMENT	9	138	89	1	--	--
193	CNTL MODE SELECTOR	9	168	89	1	--	--

** THESE ARE SIMPLE REPAIR PROCED., THEREFORE NO NETWORKS FOLLOW

III.1.7.44 LRU #194 - 512CL -- INDICATOR, HORIZONTAL SITUATION -

RP. NO.	TIME MIN	PERSONNEL TYPE	PERSONNEL NO	AGE #1	AGE #2	ITEM PROB
464	132	89	1	--	--	.80
465	162	86	1	--	--	.20

TOTAL NUMBER OF PART REPAIR PROCEDURES = 2

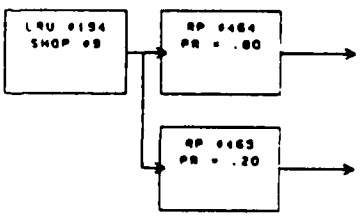

FIGURE 117

III 1 7 45 SIMPLE REPAIR TASKS #195, #196 -

LRU #	DESCRIPTION	SHOP	TIME MIN.	PERSONNEL TYPE	PERSONNEL NO.	AGE #1	AGE #2
195	AMP.HORIZ SITUAT	9	213	89	1	--	--
196	GENERAT.AURAL TONE	9	138	89	1	--	--

** THESE ARE SIMPLE REPAIR PROCED., THEREFORE NO NETWORKS FOLLOW

III 1 7.46 LRU #197 - 51360 -- ANGLE-OF-ATTACK TRANSMITTER -

RP. NO.	TIME MIN.	PERSONNEL TYPE	PERSONNEL NO	AGE #1	AGE #2	ITEM PROB
466	90	89	1	--	--	.80
467	102	86	1	--	--	.20

TOTAL NUMBER OF PART REPAIR PROCEDURES = 2

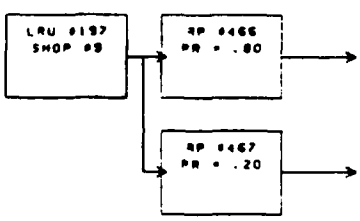

FIGURE 118

III 1 7 47 SIMPLE REPAIR TASKS #198 - #200 -

LRU #	DESCRIPTION	SHOP	TIME MIN.	PERSONNEL TYPE	PERSONNEL NO	AGE #1	AGE #2
198	AURAL STALL WARN CNTL	9	126	89	1	--	--
199	INDICAT ANG-OF-ATTACK	9	78	89	1	--	--
200	INDEXER LIGHT ASSY	9	78	89	1	--	--

** THESE ARE SIMPLE REPAIR PROCED.. THEREFORE NO NETWORKS FOLLOW

III 1 7 48 LRU #201 - 513HO -- AIR DATA COMPUTER -

RP NO.	TIME MIN.	PERSONNEL TYPE	PERSONNEL NO	AGE #1	AGE #2	ITEM PROB
468	285	89	2	--	--	.99
469	234	88	1	--	--	.01

TOTAL NUMBER OF PART REPAIR PROCEDURES = 2

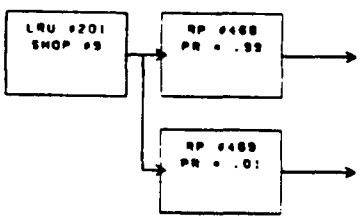

FIGURE 119

III 1 7.49 SIMPLE REPAIR TASKS #202 - #206 -

LRU #	DESCRIPTION	SHOP	TIME MIN.	PERSONNEL TYPE	PERSONNEL NO.	AGE #1	AGE #2
202	STATIC PRESS COMPENS	9	114	89	1	--	--
203	PRESS RATIO TRANSDU	9	114	89	1	--	--
204	LOG PRESS CONTROL	9	132	89	1	--	--
205	MACH SECTOR RESIST	9	150	89	1	--	--
206	COMPUTER AMPLIFIER	9	96	89	1	--	--

** THESE ARE SIMPLE REPAIR PROCED.. THEREFORE NO NETWORKS FOLLOW

III 1.7.50 LRU #207 - 513XO -- ALTITUDE ENCODER UNIT -

RP. NO.	TIME MIN.	PERSONNEL TYPE	PERSONNEL NO	AGE #1	AGE #2	ITEM PROB
470	141	89	1	--	--	.88
471	180	86	1	--	--	.12

TOTAL NUMBER OF PART REPAIR PROCEDURES = 2

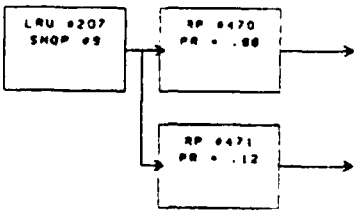

FIGURE 120

III 1 7.51 SIMPLE REPAIR TASKS #208 - #210 -

LRU #	DESCRIPTION	SHOP	TIME MIN.	PERSONNEL TYPE	PERSONNEL NO.	AGE #1	AGE #2
208	AILERON-RUDD INTERCON	8	162	88	1	--	--
209	ARI AMP.AUTO FLIGHT	8	201	88	1	--	--
210	AIRCRAFT ACCERLEROM	8	114	86	1	--	--

** THESE ARE SIMPLE REPAIR PROCED., THEREFORE NO NETWORKS FOLLOW

III.1 7.52 LRU #211 - 52250 -- AIRCRAFT ACCELEROMETER (LATERAL) -

RP NO.	TIME MIN.	PERSONNEL TYPE	PERSONNEL NO	AGE #1	AGE #2	ITEM PROB
472	196	86	1	--	--	.59
473	177	89	1	--	--	.41

TOTAL NUMBER OF PART REPAIR PROCEDURES = 2

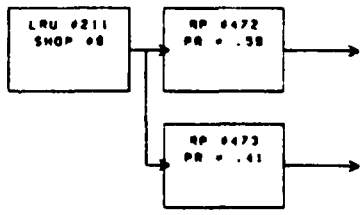

FIGURE 121

III.1.7.53 LRU #212 - 52270 -- RATE GYRO (ROLL) -

RP NO.	TIME MIN	PERSONNEL TYPE	PERSONNEL NO	AGE #1	AGE #2	ITEM PROB
474	129	88	1	--	--	.67
475	96	89	1	--	--	.33

TOTAL NUMBER OF PART REPAIR PROCEDURES = 2

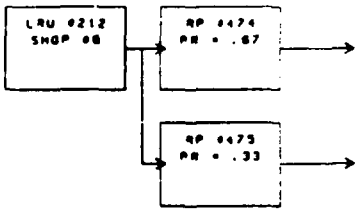

FIGURE 122

III.1.7.54 LRU #213 - 52280 -- RATE GYRO (YAW) -

RP NO.	TIME MIN.	PERSONNEL TYPE	PERSONNEL NO	AGE #1	AGE #2	ITEM PROB
476	186	88	1	--	--	.73
477	150	89	1	--	--	.27

TOTAL NUMBER OF PART REPAIR PROCEDURES = 2

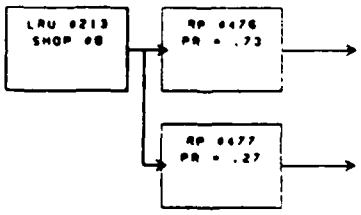

FIGURE 123

III.1.7.55 LRU #214 - 522AO -- CONTROLLER, ENGAGING, AUTO PILOT -

RP NO.	TIME MIN	PERSONNEL TYPE	PERSONNEL NO	AGE #1	AGE #2	ITEM PROB
478	189	88	1	--	--	.75
479	162	89	1	--	--	.25

TOTAL NUMBER OF PART REPAIR PROCEDURES = 2

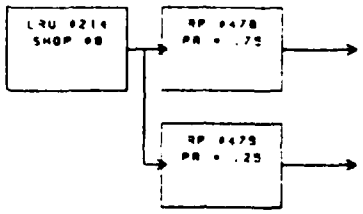

FIGURE 124

III.1.7.56 LRU #215 - 522BO -- TRANSDUCER, MOTIONAL PICK UP -

RP NO.	TIME MIN	PERSONNEL TYPE	PERSONNEL NO	AGE #1	AGE #2	ITEM PROB
480	360	88	1	--	--	1.00
481	741	89	1	--	--	.06
482	513	88	1	--	--	.94

TOTAL NUMBER OF PART REPAIR PROCEDURES = 3

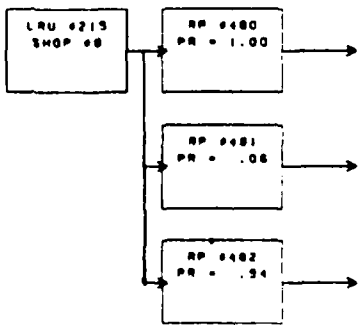

FIGURE 125

III.1.7.57 LRU #216 - 522ED -- AMPLIFIER, CONTROL -

RP NO.	TIME MIN	PERSONNEL TYPE	PERSONNEL NO	AGE #1	AGE #2	ITEM PROB
483	456	88	1	--	--	1.00
484	558	89	1	--	--	.04
485	432	88	1	--	--	.96

TOTAL NUMBER OF PART REPAIR PROCEDURES = 3

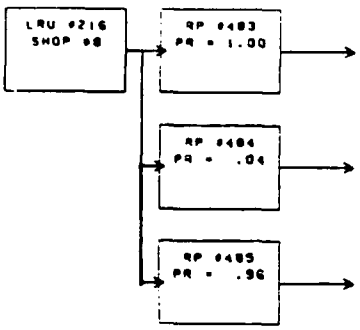

FIGURE 126

III.1.7.58 LRU #217 - 522EB -- AMPLIFIER, SERVO, YAW -

RP NO.	TIME MIN.	PERSONNEL TYPE	PERSONNEL NO	AGE #1	AGE #2	ITEM PROB
486	102	88	1	--	--	1.00
487	96	89	1	--	--	1.00

TOTAL NUMBER OF PART REPAIR PROCEDURES = 2

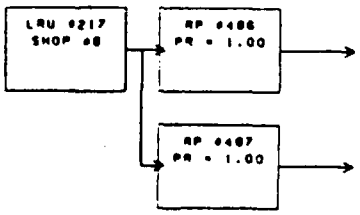

FIGURE 127

III 1.7.59 SIMPLE REPAIR TASK #218 -

LRU #	DESCRIPTION	SHOP	TIME MIN.	PERSONNEL TYPE	PERSONNEL NO.	AGE #1	AGE #2
218	AMP.SERVO ROLL RIGHT	8	102	88	1	--	--

** THIS IS A SIMPLE REPAIR PROC , THEREFORE NO NETWORK WILL FOLLOW

III.1.7.60 LRU #219 - 522EQ -- SYNC DRIVE, PITCH, TWO SPEED -

RP. NO	TIME MIN.	PERSONNEL TYPE	PERSONNEL NO	AGE #1	AGE #2	ITEM PROB
488	72	86	1	--	--	1.00
489	78	89	1	--	--	1.00

TOTAL NUMBER OF PART REPAIR PROCEDURES = 2

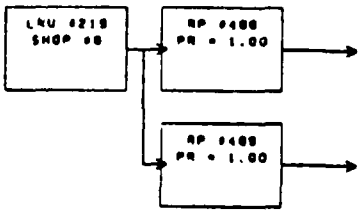

FIGURE 128

III 1.7.61 SIMPLE REPAIR TASKS #220 - #226 -

LRU #	DESCRIPTION	SHOP	TIME MIN.	PERSONNEL TYPE	PERSONNEL NO.	AGE #1	AGE #2
220	RECORD VEL.GRAV.HGT	9	156	89	1	--	--
221	MAGAZINE VEL.GRAV.HGT	9	186	89	1	--	--
222	INDIC.STAT ACCELER	9	183	89	1	--	--
223	TRANSDUCER.STAT ACC	9	243	89	1	--	--
224	NOC	20	360	20	2	--	--
225	NOC	20	132	20	2	--	--
226	NOC	12	126	80	1	--	--

** THESE ARE SIMPLE REPAIR PROCED., THEREFORE NO NETWORKS FOLLOW

III.1.7.62 LRU #227 - 6331C -- NOC -

RP. NO.	TIME MIN.	PERSONNEL TYPE	PERSONNEL NO	AGE #1	AGE #2	ITEM PROB
490	96	80	1	--	--	.93
491	90	81	1	--	--	.07

TOTAL NUMBER OF PART REPAIR PROCEDURES = 2

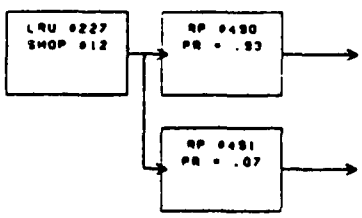

FIGURE 129

III.1.7.63 SIMPLE REPAIR TASKS #228 - #230 -

LRU #	DESCRIPTION	SHOP	TIME MIN.	PERSONNEL TYPE	PERSONNEL NO.	AGE #1	AGE #2
228	NOC	12	66	80	1	--	--
229	NOC	12	66	80	1	--	--
230	NOC	12	78	80	1	--	--

** THESE ARE SIMPLE REPAIR PROCED., THEREFORE NO NETWORKS FOLLOW

III.1.7.64 LRU #231 - 6331N -- NOC -

RP. NO.	TIME MIN.	PERSONNEL TYPE	PERSONNEL NO	AGE #1	AGE #2	ITEM PROB
492	66	80	1	--	--	.33
493	66	81	1	--	--	.67

TOTAL NUMBER OF PART REPAIR PROCEDURES = 2

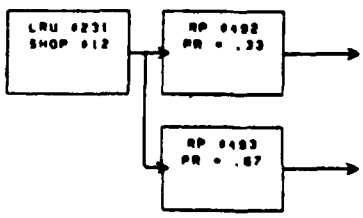

FIGURE 130

III.1.7.65 LRU #232 - 6335C -- NOC -

RP NO.	TIME MIN.	PERSONNEL TYPE	PERSONNEL NO	AGE #1	AGE #2	ITEM PROB
494	105	80	1	--	--	.89
495	105	81	1	--	--	.11

TOTAL NUMBER OF PART REPAIR PROCEDURES = 2

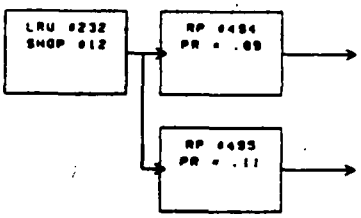

FIGURE 131

III.1.7.66 LRU #233 - 6335A -- NOC -

RP. NO	TIME MIN.	PERSONNEL TYPE	PERSONNEL NO	AGE #1	AGE #2	ITEM PROB
496	66	81	1	--	--	1.00
497	66	80	1	--	--	1.00

TOTAL NUMBER OF PART REPAIR PROCEDURES = 2

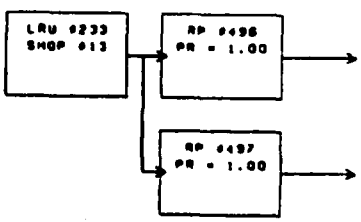

FIGURE 132

III.1.7.67 SIMPLE REPAIR TASK #234 -

LRU #	DESCRIPTION	SHOP	TIME MIN.	PERSONNEL TYPE	PERSONNEL NO.	AGE #1	AGE #2
234	NOC	12	66	80	1	--	--

** THIS IS A SIMPLE REPAIR PROC., THEREFORE NO NETWORK WILL FOLLOW

III.1.7.68 LRU #235 - 71310 -- RECEIVER, R-2032/ARN-127 -

RP NO.	TIME MIN.	PERSONNEL TYPE	PERSONNEL NO	AGE #1	AGE #2	ITEM PROB
498	150	80	1	--	--	.04
499	99	81	1	--	--	.96

TOTAL NUMBER OF PART REPAIR PROCEDURES = 2

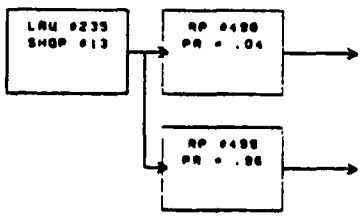

FIGURE 133

III 1 7 69 SIMPLE REPAIR TASK #236 -

LRU #	DESCRIPTION	SHOP	TIME MIN.	PERSONNEL TYPE	PERSONNEL NO.	AGE #1	AGE #2
236	CONTROL,C10124/ARN	13	66	81	1	--	--

** THIS IS A SIMPLE REPAIR PROC., THEREFORE NO NETWORK WILL FOLLOW

III 1.7 70 LRU #237 - 71350 -- INDICATOR, ILS (AFT COCKPIT) -

RP. NO.	TIME MIN.	PERSONNEL TYPE	PERSONNEL NO	AGE #1	AGE #2	ITEM PROB
500	54	81	1	--	--	.50
501	66	80	1	--	--	.50

TOTAL NUMBER OF PART REPAIR PROCEDURES = 2

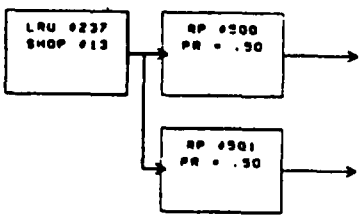

FIGURE 134

III 1 7.71 SIMPLE REPAIR TASK #238 -

LRU #	DESCRIPTION	SHOP	TIME MIN.	PERSONNEL TYPE	PERSONNEL NO.	AGE #1	AGE #2
238	CONTROL COMPUTER	15	123	78	1	--	--

** THIS IS A SIMPLE REPAIR PROC., THEREFORE NO NETWORK WILL FOLLOW

III 1 7 72 LRU #239 - 71B20 -- AMPLIFIER, COMPUTER -

RP. NO.	TIME MIN.	PERSONNEL TYPE	PERSONNEL NO	AGE #1	AGE #2	ITEM PROB
502	120	78	1	--	--	1.00
503	156	78	1	--	--	1.00

TOTAL NUMBER OF PART REPAIR PROCEDURES = 2

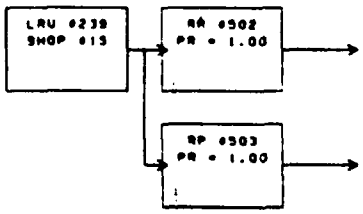

FIGURE 135

III.1.7.73 SIMPLE REPAIR TASKS #240 - #257 -

LRU #	DESCRIPTION	SHOP	TIME MIN.	PERSONNEL TYPE	PERSONNEL NO.	AGE #1	AGE #2
240	AMP A803, A804, A806	15	108	78	1	--	--
241	PREAMP A807	15	108	78	1	--	--
242	RANGE COMPUTER A810	15	108	78	1	--	--
243	INDIC. GROUND SPEED	15	87	78	1	--	--
244	CNTL PANEL C-4779	15	108	78	1	--	--
245	COMPUTER, NAVIGAT	15	432	78	1	--	--
246	ELECTRONIC SUBASSY	15	102	78	1	--	--
247	DC AMPLIFIER	15	108	78	1	--	--
248	SUMMING AMPLIFIER	15	108	78	1	--	--
249	GYRO TEMP CONTROL	15	108	78	1	--	--
250	OVEN COMPONENTS ASSY	15	108	78	1	--	--
251	PWR SUPPLY A25	15	90	78	1	--	--
252	INTEGRATOR SHAFT A24	15	108	78	1	--	--
254	DIST UNIT.OUT SIGNAL	15	264	78	1	--	--
255	SERVO, TRUE HEAD A1	15	111	78	1	--	--
256	PLATFROM.GYRO STAB	15	207	78	1	--	--
257	GYROSCOPE (UPPER)	15	108	76	1	--	--

** THESE ARE SIMPLE REPAIR PROCED., THEREFORE NO NETWORKS FOLLOW

III.1.7.74 LRU #258 - 71LEO -- AMP, POWER SUPPLY REC AM-2349 -

RP NO.	TIME MIN.	PERSONNEL TYPE	PERSONNEL NO	AGE #1	AGE #2	ITEM PROB
504	147	80	1	--	--	.90
505	126	81	1	--	--	.07
506	1638	--	--	--	--	.03

TOTAL NUMBER OF PART REPAIR PROCEDURES = 3

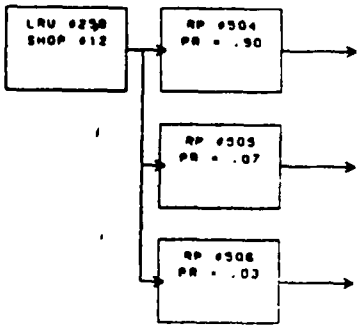

FIGURE 136

III.1.7.75 LRU #259 - 71LJC -- BEAR. DIST. HEADING INDICATOR -

RP. NO.	TIME MIN.	PERSONNEL TYPE	PERSONNEL NO	AGE #1	AGE #2	ITEM PROB
507	138	89	1	--	--	.94
508	216	86	1	--	--	.06

TOTAL NUMBER OF PART REPAIR PROCEDURES = 2

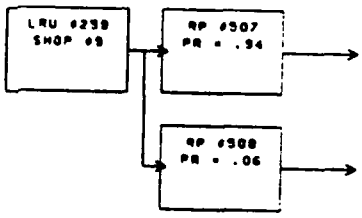

FIGURE 137

III.1.7.76 SIMPLE REPAIR TASK #260 -

LRU #	DESCRIPTION	SHOP	TIME MIN.	PERSONNEL TYPE	PERSONNEL NO.	AGE #1	AGE #2
260	INDIC.BEARING.HEAD	12	120	80	1	--	--

** THIS IS A SIMPLE REPAIR PROC., THEREFORE NO NETWORK WILL FOLLOW

III.1.7.77 LRU #261 - 71LQA -- ANTENNA, ADF, AS-909/ARA-48 -

RP. NO.	TIME MIN.	PERSONNEL TYPE	NO	AGE #1	#2	ITEM PROB
509	96	80	1	--	--	.50
510	1440	--	--	--	--	.50

TOTAL NUMBER OF PART REPAIR PROCEDURES = 2

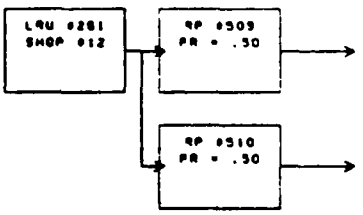

FIGURE 138

III.1.7.78 SIMPLE REPAIR TASK #262 -

LRU #	DESCRIPTION	SHOP	TIME MIN.	PERSONNEL TYPE	NO.	AGE #1	#2
262	MIKE ADAPTER ASSY	12	66	80	1	--	--

** THIS IS A SIMPLE REPAIR PROC., THEREFORE NO NETWORK WILL FOLLOW

III 1.7.79 LRU #263 - 71LXO -- HEADSET/MICROPHONE CORD -

RP. NO.	TIME MIN.	PERSONNEL TYPE	NO	AGE #1	#2	ITEM PROB
511	150	80	1	--	--	1.00
512	1536	--	--	--	--	1.00

TOTAL NUMBER OF PART REPAIR PROCEDURES = 2 .

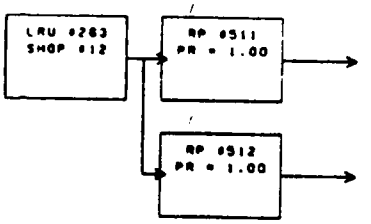

FIGURE 139

III 1.7.80 SIMPLE REPAIR TASK #264 -

LRU #	DESCRIPTION	SHOP	TIME MIN.	PERSONNEL TYPE	NO.	AGE #1	#2
264	NOC	12	108	80	1	--	--

** THIS IS A SIMPLE REPAIR PROC., THEREFORE NO NETWORK WILL FOLLOW

III 1.7.81 LRU #265 - 71MEO -- NOC -

RP. NO.	TIME MIN.	PERSONNEL TYPE	NO	AGE #1	#2	ITEM PROB
513	138	80	1	--	--	.92
514	162	81	1	--	--	.08

TOTAL NUMBER OF PART REPAIR PROCEDURES = 2

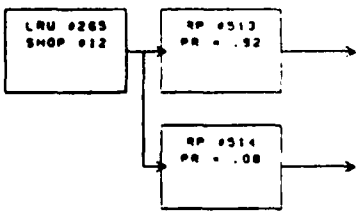

FIGURE 140

III.1.7.82 SIMPLE REPAIR TASK #266 -

LRU #	DESCRIPTION	SHOP	TIME MIN.	PERSONNEL TYPE	NO.	AGE #1	#2
266	CNTL TRANSMITTER	13	99	81	1	--	--

** THIS IS A SIMPLE REPAIR PROC., THEREFORE NO NETWORK WILL FOLLOW

III 1.7.83 LRU #267 - 71MHC -- INTERCOMMUNICATION STATION -

RP. NO.	TIME MIN.	PERSONNEL TYPE	PERSONNEL NO	AGE #1	AGE #2	ITEM PROB
515	84	80	1	--	--	.93
516	96	81	1	--	--	.07

TOTAL NUMBER OF PART REPAIR PROCEDURES = 2

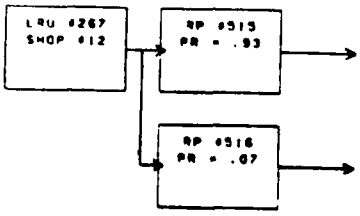

FIGURE 141

III 1.7.84 SIMPLE REPAIR TASK #268 -

LRU #	DESCRIPTION	SHOP	TIME MIN.	PERSONNEL TYPE	PERSONNEL NO.	AGE #1	AGE #2
268	INTERROGATOR SET	13	228	81	1	--	--

** THIS IS A SIMPLE REPAIR PROC., THEREFORE NO NETWORK WILL FOLLOW

III.1.7.85 LRU #269 - 71BSO -- RECEIVER-TRANSMITTER, RADIO -

RP. NO.	TIME MIN.	PERSONNEL TYPE	NO	AGE #1	#2	ITEM PROB
517	120	80	1	--	--	.01
518	180	81	1	--	--	.99

TOTAL NUMBER OF PART REPAIR PROCEDURES = 2

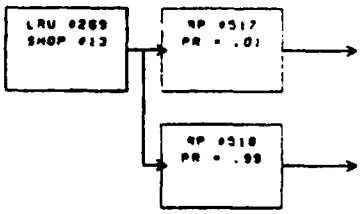

FIGURE 142

III.1.7.86 SIMPLE REPAIR TASK #270 -

LRU #	DESCRIPTION	SHOP	TIME MIN.	PERSONNEL TYPE	NO.	AGE #1	#2
270	TRANSMITTER ASSY	13	216	81	1	--	--

** THIS IS A SIMPLE REPAIR PROC., THEREFORE NO NETWORK WILL FOLLOW

III.1.7.87 LRU #271 - 71SCO -- SWITCH AMPLIFIER (UNIT 2) -

RP. NO.	TIME MIN.	PERSONNEL TYPE	PERSONNEL NO	AGE #1	AGE #2	ITEM PROB
519	318	80	1	--	--	.01
520	228	81	1	--	--	.99

TOTAL NUMBER OF PART REPAIR PROCEDURES = 2

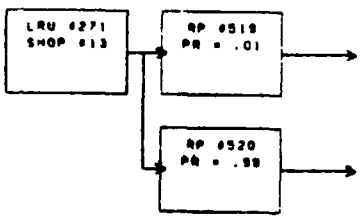

FIGURE 143

III.1.7.88 SIMPLE REPAIR TASKS #272, #273 -

LRU #	DESCRIPTION	SHOP	TIME MIN.	PERSONNEL TYPE	PERSONNEL NO.	AGE #1	AGE #2
272	SYNCHRONIZER	13	120	81	1	--	--
273	TACAN SYSTEM	13	114	81	1	--	--

** THESE ARE SIMPLE REPAIR PROCED., THEREFORE NO NETWORKS FOLLOW

III.1.7.89 LRU #274 - 71ZAO -- RECEIVING TRANSMITTER RT-1159/A -

RP. NO.	TIME MIN.	PERSONNEL TYPE	NO	AGE #1	#2	ITEM PROB
521	102	81	1	--	--	.82
522	168	80	1	--	--	.18

TOTAL NUMBER OF PART REPAIR PROCEDURES = 2

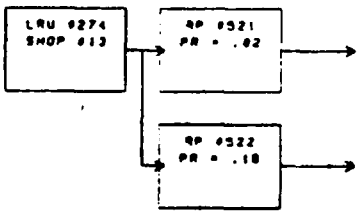

FIGURE 144

III.1.7.90 SIMPLE REPAIR TASK #275 -

LRU #	DESCRIPTION	SHOP	TIME MIN.	PERSONNEL TYPE	NO.	AGE #1	#2
275	ADAPTER MX9577/A	13	72	81	1	--	--

** THIS IS A SIMPLE REPAIR PROC., THEREFORE NO NETWORK WILL FOLLOW

III.1.7.91 LRU #276 - 71ZCO -- MOUNT (REC/TRANS) -

RP NO.	TIME MIN.	PERSONNEL TYPE	PERSONNEL NO	AGE #1	AGE #2	ITEM PROB
523	78	80	1	--	--	.06
524	78	81	1	--	--	.94

TOTAL NUMBER OF PART REPAIR PROCEDURES = 2

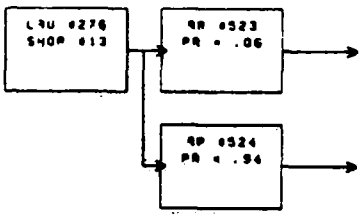

FIGURE 145

III.1.7.92 LRU #277 - 71ZDO -- CONTROL UNIT C-10062/A -

RP NO.	TIME MIN.	PERSONNEL TYPE	PERSONNEL NO	AGE #1	AGE #2	ITEM PROB
525	72	81	1	--	--	.97
526	54	80	1	--	--	.03

TOTAL NUMBER OF PART REPAIR PROCEDURES = 2

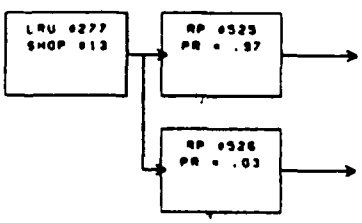

FIGURE 146

III.1.7.93 SIMPLE REPAIR TASKS #278, #279 -

LRU #	DESCRIPTION	SHOP	TIME MIN.	PERSONNEL TYPE	PERSONNEL NO.	AGE #1	AGE #2
278	CNTL UNIT C-10062/A	13	66	81	1	--	--
279	MOUNT	13	156	81	1	--	--

** THESE ARE SIMPLE REPAIR PROCED., THEREFORE NO NETWORKS FOLLOW

III.1.7.94 LRU #280 - 723AC -- RECEIVER-TRANSMITTER RT-689 -

RP. NO.	TIME MIN.	PERSONNEL TYPE	PERSONNEL NO	AGE #1	AGE #2	ITEM PROB
527	96	81	1	--	--	1.00
528	168	80	1	--	--	.07
529	129	81	1	--	--	.93

TOTAL NUMBER OF PART REPAIR PROCEDURES = 3

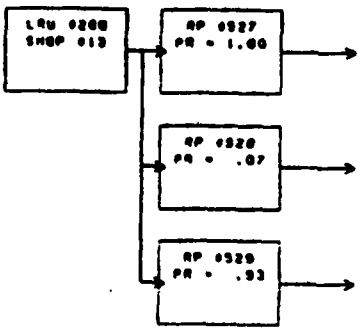

FIGURE 147

III.1.7.95 SIMPLE REPAIR TASK #281 -

LRU #	DESCRIPTION	SHOP	TIME MIN.	PERSONNEL TYPE	PERSONNEL NO.	AGE #1	AGE #2
281	VAR CAPACITY OSCILL	13	105	81	1	--	--

** THIS IS A SIMPLE REPAIR PROC., THEREFORE NO NETWORK WILL FOLLOW

III.1.7.96 LRU #282 - 72380 -- INDICATOR, HEIGHT, ID-1090 -

RP. NO.	TIME MIN.	PERSONNEL TYPE	PERSONNEL NO	AGE #1	AGE #2	ITEM PROB
530	96	81	1	--	--	.96
531	84	80	1	--	--	.04

TOTAL NUMBER OF PART REPAIR PROCEDURES = 2

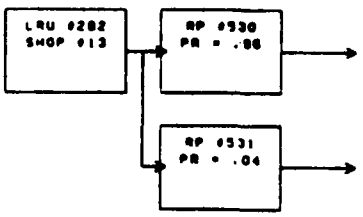

FIGURE 148

III.1.7.97 SIMPLE REPAIR TASKS #283, #284 -

LRU #	DESCRIPTION	SHOP	TIME MIN.	PERSONNEL TYPE	PERSONNEL NO.	AGE #1	AGE #2
283	ANTENNA,RECEIVER	13	84	81	1	--	--
284	ANTENNA,TRANSMITTER	13	111	81	1	--	--

** THESE ARE SIMPLE REPAIR PROCED., THEREFORE NO NETWORKS FOLLOW

III.1.7.98 LRU #285 - 72510 -- SST-181X TRANSPONDER ASSY -

RP. NO.	TIME MIN.	PERSONNEL TYPE	PERSONNEL NO	AGE #1	AGE #2	ITEM PROB
532	282	81	1	--	--	.23
533	186	81	2	--	--	.77

TOTAL NUMBER OF PART REPAIR PROCEDURES = 2

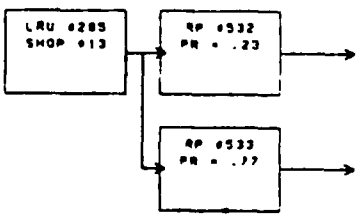

FIGURE 149

III 1.7.99 SIMPLE REPAIR TASK #286 -

LRU #	DESCRIPTION	SHOP	TIME MIN.	PERSONNEL TYPE	PERSONNEL NO.	AGE #1	AGE #2
286	ATTITUDE REFER BOMB	9	228	89	1	--	--

** THIS IS A SIMPLE REPAIR PROC., THEREFORE NO NETWORK WILL FOLLOW

III 1.7.100 LRU #287 - 731BC -- AMPLIFIER POWER SUPPLY -

RP. NO.	TIME MIN.	PERSONNEL TYPE	PERSONNEL NO	AGE #1	AGE #2	ITEM PROB
534	192	89	1	--	--	1.00
535	171	89	1	--	--	1.00

TOTAL NUMBER OF PART REPAIR PROCEDURES = 2

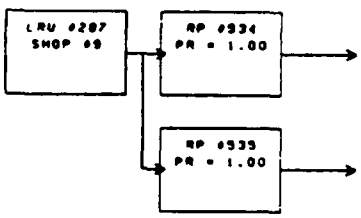

FIGURE 150

III 1.7.101 SIMPLE REPAIR TASKS #288 - #290 -

LRU #	DESCRIPTION	SHOP	TIME MIN.	PERSONNEL TYPE	PERSONNEL NO.	AGE #1	AGE #2
288	ADAPTER COMPASS	9	213	89	1	--	--
289	SYNCRO ASSEMBLY	9	90	89	1	--	--
290	COMPUTER,BOMB RELEA	9	270	89	1	--	--

** THESE ARE SIMPLE REPAIR PROCED., THEREFORE NO NETWORKS FOLLOW

III 1.7.102 LRU #291 - 731E0 -- COMPUTER, BOMBING FLIGHT DIR -

RP NO.	TIME MIN.	PERSONNEL TYPE	PERSONNEL NO	AGE #1	AGE #2	ITEM PROB
536	354	89	1	--	--	1.00
537	306	89	1	--	--	1.00

* TOTAL NUMBER OF PART REPAIR PROCEDURES = 2

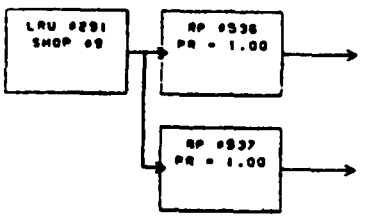

FIGURE 151

III 1.7 103 SIMPLE REPAIR TASK #292 -

LRU #	DESCRIPTION	SHOP	TIME MIN.	PERSONNEL TYPE	PERSONNEL NO.	AGE #1	AGE #2
292	CONTROLLER COMPASS	9	159	89	1	--	--

** THIS IS A SIMPLE REPAIR PROC., THEREFORE NO NETWORK WILL FOLLOW

III 1.7 104 LRU #293 - 731GC -- DISPLACEMENT GYRO -

RP. NO.	TIME MIN.	PERSONNEL TYPE	PERSONNEL NO	AGE #1	AGE #2	ITEM PROB
538	126	89	1	--	--	1.00
539	294	89	1	--	--	1.00

TOTAL NUMBER OF PART REPAIR PROCEDURES = 2

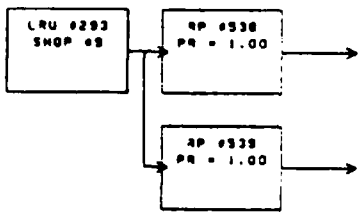

FIGURE 152

III 1 7 105 SIMPLE REPAIR TASKS #294 - #296 -

LRU #	DESCRIPTION	SHOP	TIME MIN.	PERSONNEL TYPE	PERSONNEL NO.	AGE #1	AGE #2
294	INDIC.ATTITUDE REF	9	96	89	1	--	--
295	GYRO.RATE SWITCHING	9	99	89	1	--	--
296	DUAL TIMER	9	90	89	1	--	--

** THESE ARE SIMPLE REPAIR PROCED., THEREFORE NO NETWORKS FOLLOW

III 1.7.106 LRL #297 - 731NO -- REMOTE ATTITUDE INDICATOR -

RP. NO.	TIME MIN.	PERSONNEL TYPE	PERSONNEL NO	AGE #1	AGE #2	ITEM PROB
540	96	89	1	--	--	.86
541	132	86	1	--	--	.12

TOTAL NUMBER OF PART REPAIR PROCEDURES = 2

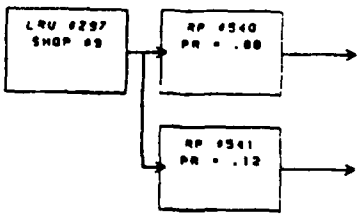

FIGURE 153

III 1.7 107 SIMPLE REPAIR TASKS #298 - #320 -

LRU #	DESCRIPTION	SHOP	TIME MIN.	PERSONNEL TYPE	NO.	AGE #1	#2
298	INDIC.STANDBY VERT	9	166	89	1	--	--
299	PANEL ASSY.INVERTER	9	108	89	1	--	--
300	CNTL.COMPUTE CURSOR	15	108	78	1	--	--
301	COMPUTE.CNTL C-6480	15	117	78	1	--	--
302	BALLISTICS COMPUTER	15	375	78	1	--	--
303	NOC	15	108	78	1	--	--
304	CROSS TRACK RANGE	15	108	78	1	--	--
305	DC AMPLIFIER	15	106	78	1	--	--
306	COMPUTER CNTL ASSY	15	216	78	1	--	--
307	WEAPON DELIVER PAN	15	126	78	1	--	--
308	DIGITAL MODUL AVIO	15	264	78	1	--	--
309	NAVIG COMPUTER	15	153	78	1	--	--
310	LORAN RECEIVER	15	114	78	1	--	--
311	KEYER CONTROL	15	174	78	1	--	--
312	SIGNAL DATA CONVERT	15	318	78	1	--	--
313	PWR SUPPL PP-7428/A	15	114	78	1	--	--
314	DIGITAL DISPL UNIT	15	144	78	1	--	--
315	NAVIG COMPUTER CNTL	15	228	78	1	--	--
316	CIRCUIT CARD ASSY	15	54	78	1	--	--
317	INERTIAL MEAS BUFF	15	114	78	1	--	--
318	INERTIAL MEAS UNIT	15	204	78	1	--	--
319	NOC	15	1020	78	1	--	--
320	GYRO.LEAD COMPUTING	16	45	79	1	--	--

** THESE ARE SIMPLE REPAIR PROCED.. THEREFORE NO NETWORKS FOLLOW

III.1.7.108 LRU #321 - 7483C -- NOC -

RP. NO.	TIME MIN.	PERSONNEL TYPE	NO	AGE #1	#2	ITEM PROB
542	102	79	1	--	--	1.00
543	105	79	1	--	--	1.00

TOTAL NUMBER OF PART REPAIR PROCEDURES = 2

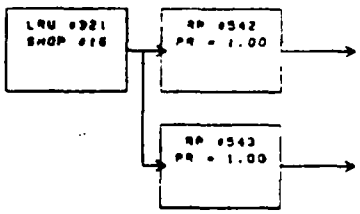

FIGURE 154

III.1.7.109 SIMPLE REPAIR TASKS #322, #323 -

LRU #	DESCRIPTION	SHOP	TIME MIN.	PERSONNEL TYPE	NO.	AGE #1	#2
322	OPTICAL DISP UNIT	16	66	79	1	--	--
323	NOC	16	72	79	1	--	--

** THESE ARE SIMPLE REPAIR PROCED., THEREFORE NO NETWORKS FOLLOW

III 1 7 110 LRU #324 - 74920 -- NOC -

RP NO.	TIME MIN.	PERSONNEL TYPE	NO	AGE #1	#2	ITEM PROB
544	78	79	.	--	--	1.00
545	72	79	.	--	--	1.00

TOTAL NUMBER OF PART REPAIR PROCEDURES = 2

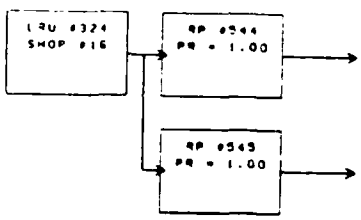

FIGURE 155

III.1.7 111 SIMPLE REPAIR TASK #325 -

LRU #	DESCRIPTION	SHOP	TIME MIN.	PERSONNEL TYPE	NO.	AGE #1	#2
325	NOC	16	60	79	1	--	--

** THIS IS A SIMPLE REPAIR PROC., THEREFORE NO NETWORK WILL FOLLOW

III 1 7 112 LRU #326 - 74BAC -- POWER SUPPLY PP-4848 -

RP. NO.	TIME MIN	PERSONNEL TYPE	NO	AGE #1	#2	ITEM PROB
546	114	79	1	--	--	1.00
547	132	79	1	--	--	1.00

TOTAL NUMBER OF PART REPAIR PROCEDURES = 2

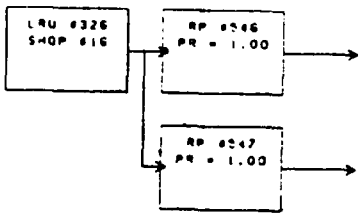

FIGURE 156

III 1 7 113 SIMPLE REPAIR TASKS #327 - #330 -

LRU #	DESCRIPTION	SHOP	TIME MIN.	PERSONNEL TYPE	NO.	AGE #1	#2
327	CNTL-OSCILL C-7349	16	93	79	1	--	--
328	SYNCHRO. ELECTRONIC	16	96	79	1	--	--
329	COMPUTER.TARGET	16	123	79	1	--	--
330	PWR SUPPLY PP-4487	16	72	79	1	--	--

** THESE ARE SIMPLE REPAIR PROCED., THEREFORE NO NETWORKS FOLLOW

III 1.7 114 LRU #331 - 74BFO -- TRANSMITTER, RADAR T-7348 -

RP NO.	TIME MIN	PERSONNEL TYPE	PERSONNEL NO	AGE #1	AGE #2	ITEM PROB
548	234	79	1	--	--	1.00
549	168	79	1	--	--	1.00

TOTAL NUMBER OF PART REPAIR PROCEDURES = 2

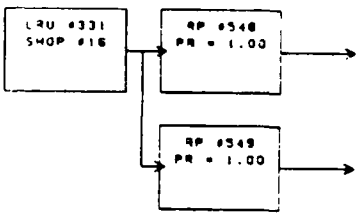

FIGURE 157

III 1.7 115 SIMPLE REPAIR TASKS #332, #333 -

LRU #	DESCRIPTION	SHOP	TIME MIN.	PERSONNEL TYPE	PERSONNEL NO.	AGE #1	AGE #2
332	MODUL-OSCILLATOR	16	165	79	1	--	--
333	NOC	16	204	79	1	--	--

** THESE ARE SIMPLE REPAIR PROCED., THEREFORE NO NETWORKS FOLLOW

III 1 7 116 LRU #334 - 74BJC -- CONTROL, ANTENNA C-7348 -

RP NO	TIME MIN	PERSONNEL TYPE	NO	AGE #1	#2	ITEM PROB
550	198	79	1	--	--	1.00
551	126	79	1	--	--	1.00

TOTAL NUMBER OF PART REPAIR PROCEDURES = 2

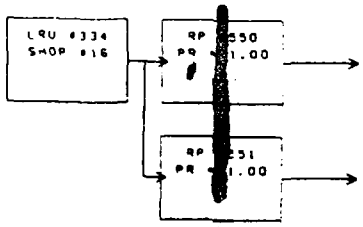

FIGURE 158

III.1.7.117 SIMPLE REPAIR TASKS #335 - #340 -

LRU #	DESCRIPTION	SHOP	TIME MIN.	PERSONNEL TYPE	NO.	AGE #1	#2
335	OSCILL.R-F O-1430	16	84	79	1	--	--
336	STABILILZER ASSY	16	81	79	1	--	--
337	NOC	16	126	79	1	--	--
338	NOC	16	111	79	1	--	--
339	WAVE GUIDE ASSY	16	222	79	1	--	--
340	INDIC. INTRA TARGER	16	288	79	1	--	--

** THESE ARE SIMPLE REPAIR PROCED., THEREFORE NO NETWORKS FOLLOW

III 1.7.118 LRU #341 - 74BSO -- CONTROL, RADAR SET -

RP NO	TIME MIN.	PERSONNEL TYPE	PERSONNEL NO	AGE #1	AGE #2	ITEM PROB
552	90	79	1	--	--	1.00
553	186	79	1	--	--	1.00

TOTAL NUMBER OF PART REPAIR PROCEDURES = 2

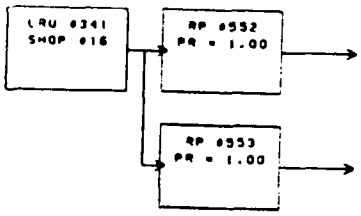

FIGURE 159

III 1.7.119 SIMPLE REPAIR TASKS #342, #343 -

LRU #	DESCRIPTION	SHOP	TIME MIN.	PERSONNEL TYPE	PERSONNEL NO.	AGE #1	AGE #2
342	CNTL-MONITOR	16	144	79	1	--	--
343	INDIC,CNTL C-7347	16	90	79	1	--	--

** THESE ARE SIMPLE REPAIR PROCED., THEREFORE NO NETWORKS FOLLOW

III 1.7.120 LRU #344 - 74BVC -- ANTENNA AS-2072A -

RP NO	TIME MIN.	PERSONNEL TYPE	NO	AGE #1	#2	ITEM PROB
554	216	79	1	--	--	1.00
555	189	79	1	--	--	1.00

TOTAL NUMBER OF PART REPAIR PROCEDURES = 2

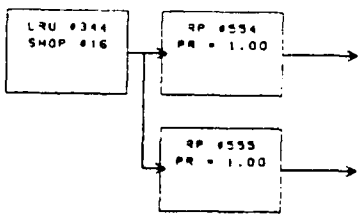

FIGURE 160

III 1.7.121 SIMPLE REPAIR TASKS #345 - #347 -

LRU #	DESCRIPTION	SHOP	TIME MIN.	PERSONNEL TYPE	NO	AGE #1	#2
345	RACK.ELECT EQUIP	16	330	79	1	--	--
346	CABLE.ASSY	16	210	79	1	--	--
347	NOC	16	60	79	1	--	--

** THESE ARE SIMPLE REPAIR PROCED., THEREFORE NO NETWORKS FOLLOW

III 1 7 122 LRU #348 - 74CAO -- INDICATOR CONTROL UNIT DSCG -

RP. NO.	TIME MIN.	PERSONNEL TYPE	PERSONNEL NO	AGE #1	AGE #2	ITEM PROB
556	150	79	1	--	--	1.00
557	78	79	1	--	--	1.00

TOTAL NUMBER OF PART REPAIR PROCEDURES = 2

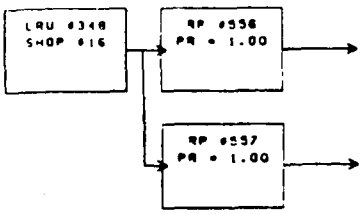

FIGURE 161

III.1.7.123 LRU #349 - 74CBO -- INDICATOR, AZ, EL, & RANGE -

RP. NO.	TIME MIN.	PERSONNEL TYPE	PERSONNEL NO	AGE #1	AGE #2	ITEM PROB
558	234	79	1	--	--	1.00
559	111	79	1	--	--	1.00

TOTAL NUMBER OF PART REPAIR PROCEDURES = 2

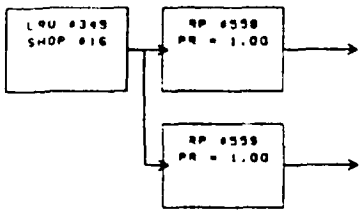

FIGURE 162

III.1.7.124 SIMPLE REPAIR TASKS #350 - #353 -

LRU #	DESCRIPTION	SHOP	TIME MIN.	PERSONNEL TYPE	PERSONNEL NO.	AGE #1	AGE #2
350	INDIC.AZ.EL.& RANGE	16	114	79	1	--	--
351	TUNING DRIVE	16	345	79	1	--	--
352	NOC	16	690	79	1	--	--
353	NOC	16	76	79	1	--	--

** THESE ARE SIMPLE REPAIR PROCED., THEREFORE NO NETWORKS FOLLOW

III 1.7.125 LRU #354 - 75190 -- NOC -

RP. NO.	TIME MIN.	PERSONNEL TYPE	PERSONNEL NO	AGE #1	AGE #2	ITEM PROB
560	231	27	1	--	--	.91
561	138	82	1	--	--	.09

TOTAL NUMBER OF PART REPAIR PROCEDURES = 2

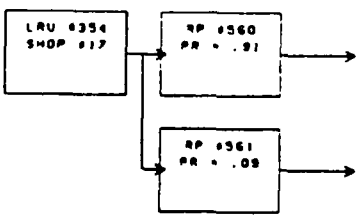

FIGURE 163

III 1.7.126 LRU #355 - 7519A -- NOC -

RP NO	TIME MIN	PERSONNEL TYPE	PERSONNEL NO	AGE #1	AGE #2	ITEM PROB
562	144	27	2	--	--	.39
563	264	82	1	--	--	.61

TOTAL NUMBER OF PART REPAIR PROCEDURES = 2

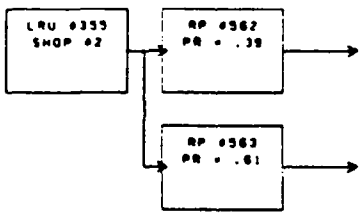

FIGURE 164

III 1.7.127 LRU #356 - 7519B -- NOC -

RP NO	TIME MIN	PERSONNEL TYPE	PERSONNEL NO	AGE #1	AGE #2	ITEM PROB
564	144	27	2	--	--	.76
565	204	82	1	--	--	.24

TOTAL NUMBER OF PART REPAIR PROCEDURES = 2

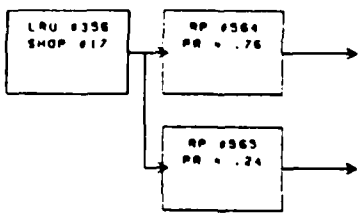

FIGURE 165

III 1.7.126 LRU #357 - 7519C -- NOC -

RP NO.	TIME MIN	PERSONNEL TYPE	NO	AGE #1	#2	ITEM PROB
566	72	27	1	--	--	.06
567	204	82	1	--	--	.24
568	144	27	2	--	--	.70

TOTAL NUMBER OF PART REPAIR PROCEDURES = 3

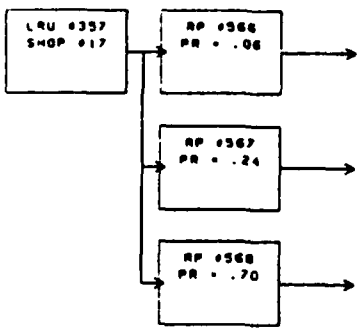

FIGURE 166

III.1.7.129 LRU #358 - 7519D -- NOC -

RP. NO.	TIME MIN	PERSONNEL TYPE	NO	AGE #1	#2	ITEM PROB
569	144	27	2	--	--	.13
570	264	82	1	--	--	.87

TOTAL NUMBER OF PART REPAIR PROCEDURES = 2

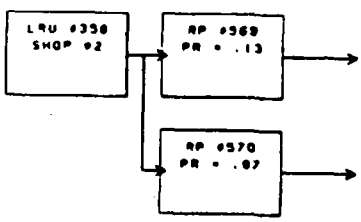

FIGURE 167

III.1.7.130 SIMPLE REPAIR TASK #359 -

LRU #	DESCRIPTION	SHOP	TIME MIN.	PERSONNEL TYPE	PERSONNEL NO.	AGE #1	AGE #2
359	NOC	17	42	27	1	--	--

** THIS IS A SIMPLE REPAIR PROC., THEREFORE NO NETWORK WILL FOLLOW

III.1.7.131 LRU #360 - 75310 -- CENTERLINE MER -

RP. NO.	TIME MIN.	PERSONNEL TYPE	PERSONNEL NO	AGE #1	AGE #2	ITEM PROB
571	270	27	2	--	--	.71
572	450	27	3	--	--	.29

TOTAL NUMBER OF PART REPAIR PROCEDURES = 2

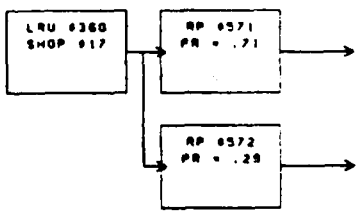

FIGURE 168

III 1.7 132 SIMPLE REPAIR TASKS #361 - #371 -

LRU #	DESCRIPTION	SHOP	TIME MIN.	PERSONNEL TYPE	PERSONNEL NO.	AGE #1	AGE #2
361	SENSING SWITCH	17	120	27	2	--	--
362	TER	17	345	27	2	--	--
363	MISSILE FIRE CIRCUIT	17	288	27	2	--	--
364	AUX ARMAMENT CNTL	17	324	27	3	--	--
365	L-H S/W MISSILE ASSY	17	420	27	3	--	--
366	R-H S/W MISSILE ASSY	17	222	27	3	--	--
367	MISS FIRE RELAY PAN	17	108	27	3	--	--
368	ARMAMENT RELAY ASSY	17	363	27	2	--	--
369	STATION SELECT SWITC	17	759	27	2	--	--
370	WIRE HARNESS,MULT	17	900	27	3	--	--
371	INTERVALOMETER,P/N	17	195	27	2	--	--

** THESE ARE SIMPLE REPAIR PROCED.. THEREFORE NO NETWORKS FOLLOW

III.1.7.133 LRU #372 - 75950 -- WEAPONS RELEASE CONTROL -

RP NO.	TIME MIN.	PERSONNEL TYPE	PERSONNEL NO	AGE #1	AGE #2	ITEM PROB
571	270	27	2	--	--	.71
572	450	27	3	--	--	.29

TOTAL NUMBER OF PART REPAIR PROCEDURES = 2

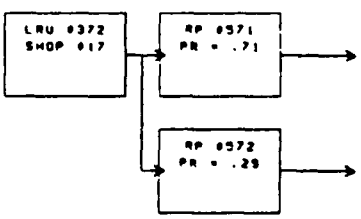

FIGURE 169

III : 7 134 SIMPLE REPAIR TASKS #373 - #412 -

LRU #	DESCRIPTION	SHOP	TIME MIN.	PERSONNEL TYPE	PERSONNEL NO.	AGE #1	AGE #2
373	GUN,PALLET INTERNAL	17	744	27	2	--	--
374	AMMO DRUM	17	504	27	2	--	--
375	EXIT UNIT	17	144	27	1	--	--
376	UNLOADER UNIT	17	204	27	1	--	--
377	FEEDER UNIT	17	330	27	1	--	--
378	DRIVE,HYDRAUL,GUN	6	264	86	2	--	--
379	FILTER,HYDRAUL,GUN	6	114	86	1	--	--
380	PURGE ASSEMBLY	17	54	27	1	--	--
381	DRIVE ASSEMBLY	17	159	27	1	--	--
382	GUN,INTERNAL 20MM	17	390	27	2	--	--
383	CONTACT ASSY FIRING	17	72	27	1	--	--
384	BARREL SET,GUN	17	264	27	1	--	--
385	SOLENOID CLEARING	17	84	27	1	--	--
386	AN/ALE-40 CHAFF DISP	14	132	85	1	--	--
387	CHAFF/FLARE PROGRAM	14	138	85	1	--	--
388	CHAFF MODULE ASSY	14	72	85	1	--	--
389	SEQUENCE SWITCH ASSY	14	159	85	1	--	--
390	DRIVER PCB	14	138	85	1	--	--
391	SLAVE DISPENSER	14	114	85	1	--	--
392	CHAFF PAYLOAD MODULE	14	108	85	1	--	--
393	MASTER DISPENSER	14	168	85	1	--	--
394	CABLE ASSEMBLY	14	72	85	1	--	--
395	COCKPIT CNTL UNIT	14	105	85	1	--	--
396	NOC	14	174	85	1	--	--
397	SIGNAL PROCESSOR	14	141	85	1	--	--
398	READ ONLY MEMORY A2	14	54	85	1	--	--
399	DISPLAY DRIVER	14	54	85	1	--	--
400	VIDEO PROCESSOR A5	14	54	85	1	--	--
401	CPU A6	14	54	85	1	--	--
402	RECEIVER R1854A	14	144	85	1	--	--
403	AMPLIFIER DETECTOR	14	213	85	1	--	--
404	TRIPLEXER/LIMITER	14	84	85	1	--	--
405	VIDEO AMP A2,A4	14	54	85	1	--	--
406	REGULATOR A7	14	54	85	1	--	--
407	INDIC CONTROL TDU	14	120	85	1	--	--
408	AZIMUTH INDICATOR	14	144	85	1	--	--
409	EXPOSURE FREQ CNTL	20	204	20	1	--	--
410	PERISCOPE, DRS	20	144	20	1	--	--
411	KD-42A CAMERA	20	360	20	1	--	--
412	KB-25A CAMERA	20	105	20	1	--	--

** THESE ARE SIMPLE REPAIR PROCED., THEREFORE NO NETWORKS FOLLOW

III 1.7.135 LRU #413 - 9321A -- CONTAINER, STORAGE SYSTEM -

RP. NO.	TIME MIN.	PERSONNEL TYPE	PERSONNEL NO	AGE #1	AGE #2	ITEM PROB
573	228	82	1	--	--	.50
574	480	--	--	--	--	.50

TOTAL NUMBER OF PART REPAIR PROCEDURES = 2

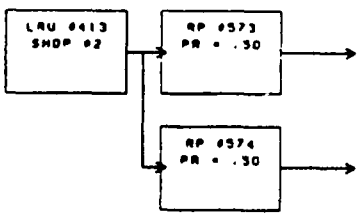

FIGURE 170

III.1.7.136 SIMPLE REPAIR TASKS #414 - #577 -

LRU #	DESCRIPTION	SHOP	TIME MIN.	PERSONNEL TYPE	PERSONNEL NO.	AGE #1	AGE #2
414	DOOR 107	2	162	82	1	--	--
576	VALVE, RECEPTACLE	6	432	86	2	--	--
577	NOC	17	330	27	3	--	--

** THESE ARE SIMPLE REPAIR PROCED., THEREFORE NO NETWORKS FOLLOW

III.1.7 137 LRU #578 - 75110 -- AERO 3B LAUNCHER -

RP. NO.	TIME MIN.	PERSONNEL TYPE	PERSONNEL NO	AGE #1	AGE #2	ITEM PROB
618	180	27	2	--	--	.04
619	330	27	3	--	--	.96

TOTAL NUMBER OF PART REPAIR PROCEDURES = 2

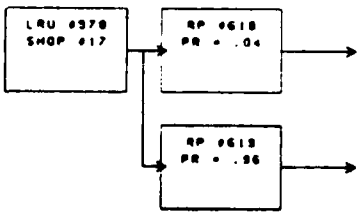

FIGURE 171

III.1.7 138 SIMPLE REPAIR TASKS #579 - #587 -

LRU #	DESCRIPTION	SHOP	TIME MIN.	PERSONNEL TYPE	PERSONNEL NO.	AGE #1	AGE #2
579	AERO-7A	17	525	27	3	--	--
580	AERO-27A/BRU-5A	17	468	27	2	--	--
581	NOC	17	180	27	2	--	--
582	BREECH ASSEMBLY	17	270	27	2	--	--
583	PISTON ASSEMELY	17	180	27	2	--	--
584	LAU-7A/A LAUNCHER	17	519	27	3	--	--
585	MECHANISM ASSEMBLY	17	198	27	2	--	--
586	LAU-34/A LAUNCHER	17	357	27	3	--	--
587	ARMAMENT PYLONS	17	459	27	3	--	--

** THESE ARE SIMPLE REPAIR PROCED., THEREFORE NO NETWORKS FOLLOW

III 1.7.139 LRU #586 - 751CA -- PYLON, INBOARD ARMAMENT, R-H -

RP. NO.	TIME MIN	PERSONNEL TYPE	PERSONNEL NO	AGE #1	AGE #2	ITEM PROB
620	540	27	3	--	--	.91
621	162	82	1	--	--	.09

TOTAL NUMBER OF PART REPAIR PROCEDURES = 2

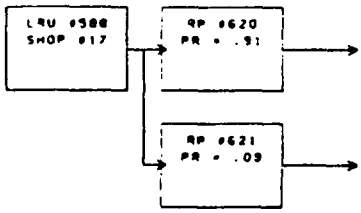

FIGURE 172

III 1.7.140 LRU #589 - 751CB -- PYLON, OUTBOARD ARMAMENT L-H -

RP. NO.	TIME MIN.	PERSONNEL TYPE	PERSONNEL NO	AGE #1	AGE #2	ITEM PROB
622	360	27	3	--	--	.97
623	162	82	1	--	--	.03

TOTAL NUMBER OF PART REPAIR PROCEDURES = 2

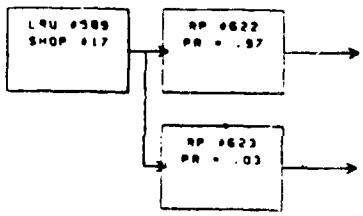

FIGURE 173

AD-A169 575 TSAR (THEATER SIMULATION OF AIRBASE RESOURCES) DATABASE DICTIONARY F-4E(U) ORLANDO TECHNOLOGY INC SHALIMAR FL D ROBINSON ET AL. 28 MAR 86 4/4

UNCLASSIFIED F/G 5/2 NL

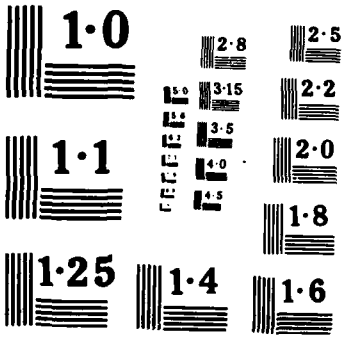
1·0
2·8
2·5
3·15
2·2
3·5
1·1
4·0
2·0
4·5
1·8
1·25
1·4
1·6

III.1.7.141 LRU #590 - 751CC -- PYLON, OUTBOARD ARMAMENT, R-H -

RP. NO.	TIME MIN.	PERSONNEL TYPE	PERSONNEL NO	AGE #1	AGE #2	ITEM PROB
624	360	27	3	--	--	.94
625	222	82	1	--	--	.06

TOTAL NUMBER OF PART REPAIR PROCEDURES = 2

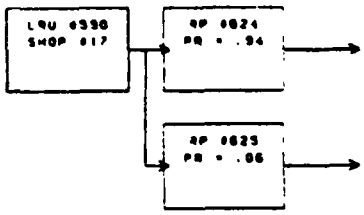

FIGURE 174

III.1.7.142 LRU #591 - 751CD -- PYLON, INBOARD ARMAMENT, L-H -

RP. NO.	TIME MIN	PERSONNEL TYPE	PERSONNEL NO	AGE #1	AGE #2	ITEM PROB
626	492	27	3	--	--	.77
627	192	82	1	--	--	.23

TOTAL NUMBER OF PART REPAIR PROCEDURES = 2

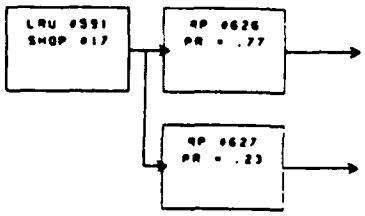

FIGURE 175

III.1.7.143 SIMPLE REPAIR TASK #592 -

LRU #	DESCRIPTION	SHOP	TIME MIN.	PERSONNEL TYPE	PERSONNEL NO.	AGE #1	AGE #2
592	MAU-12A BOMB RACK	17	417	27	2	--	--

** THIS IS A SIMPLE REPAIR PROC., THEREFORE NO NETWORK WILL FOLLOW

III.1.7.144 LRU #593 - 751NC -- SUU-20/A ROCKET/BOMB DISPENSER -

RP. NO.	TIME MIN.	PERSONNEL TYPE	PERSONNEL NO	AGE #1	AGE #2	ITEM PROB
628	405	27	3	--	--	.92
629	262	82	1	--	--	.08

TOTAL NUMBER OF PART REPAIR PROCEDURES = 2

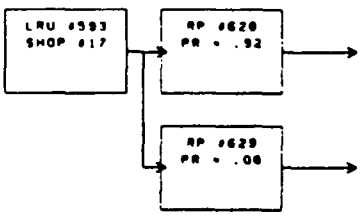

FIGURE 176

III 1 7.145 SIMPLE REPAIR TASKS #594 - #599 -

LRU #	DESCRIPTION	SHOP	TIME MIN	PERSONNEL TYPE	PERSONNEL NO	AGE #1	AGE #2
594	BOMB INTERVALOMETER	17	150	27	2	--	--
595	LAU-88 LAUNCHER	17	297	27	3	--	--
596	NOC	17	474	27	3	--	--
597	NOC	14	159	85	1	--	--
598	NOC	14	162	85	1	--	--
599	NOC	14	108	85	1	--	--

** THESE ARE SIMPLE REPAIR PROCED.. THEREFORE NO NETWORKS FOLLOW

III 1 7.146 LRU #600 - 76B60 -- NOC -

RP NO.	TIME MIN.	PERSONNEL TYPE	PERSONNEL NO	AGE #1	AGE #2	ITEM PROB
630	156	85	1	--	--	1.00
631	162	85	1	--	--	1.00

TOTAL NUMBER OF PART REPAIR PROCEDURES = 2

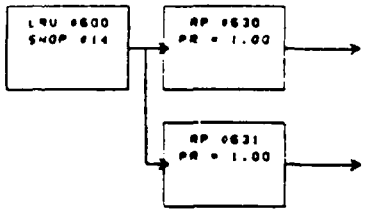

FIGURE 177

III 1.7.147 SIMPLE REPAIR TASKS #601 - #603 -

LRU #	DESCRIPTION	SHOP	TIME MIN.	PERSONNEL TYPE	PERSONNEL NO.	AGE #1	AGE #2
601	NOC	14	111	85	1	--	--
602	NOC	14	117	85	1	--	--
603	NOC	14	120	85	1	--	--

** THESE ARE SIMPLE REPAIR PROCED . THEREFORE NO NETWORKS FOLLOW

III 1.7.148 LRU #604 - 76BFO -- NOC -

RP. NO.	TIME MIN.	PERSONNEL TYPE	PERSONNEL NO	AGE #1	AGE #2	ITEM PROB
632	210	85	1	--	--	1.00
633	150	85	1	--	--	1.00

TOTAL NUMBER OF PART REPAIR PROCEDURES = 2

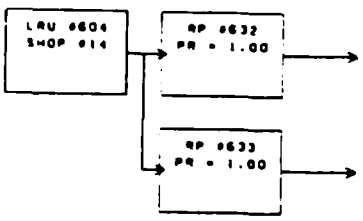

FIGURE 178

III.1 7.149 SIMPLE REPAIR TASKS #605 - #611 -

LRU #	DESCRIPTION	SHOP	TIME MIN.	PERSONNEL TYPE	PERSONNEL NO.	AGE #1	AGE #2
605	NOC	14	252	85	1	--	--
606	NOC	14	147	85	1	--	--
607	NOC	14	132	85	1	--	--
608	NOC	14	162	85	1	--	--
609	NOC	14	231	85	1	--	--
610	NOC	14	117	85	1	--	--
611	NOC	14	105	85	1	--	--

** THESE ARE SIMPLE REPAIR PROCED . THEREFORE NO NETWORKS FOLLOW

III 1 7 150 LRU #612 - 76BSO -- NOC -

RP. NO.	TIME MIN.	PERSONNEL TYPE	PERSONNEL NO	AGE #1	AGE #2	ITEM PROB
634	204	85	1	--	--	1.00
635	156	85	1	--	--	1.00

TOTAL NUMBER OF PART REPAIR PROCEDURES = 2

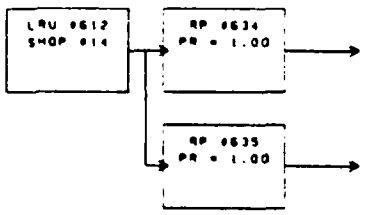

FIGURE 179

III 1 7.151 LRU #613 - 768UO -- NOC -

RP NO	TIME MIN	PERSONNEL TYPE	PERSONNEL NO	AGE #1	AGE #2	ITEM PROB
636	144	85	1	--	--	1.00
637	84	85	1	--	--	1.00

TOTAL NUMBER OF PART REPAIR PROCEDURES = 2

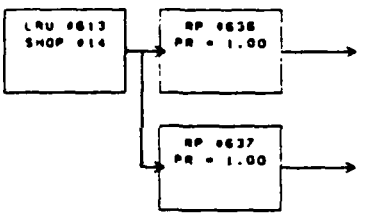

FIGURE 180

III.1.7.152 SIMPLE REPAIR TASKS #614 - #617 -

LRU #	DESCRIPTION	SHOP	TIME MIN.	PERSONNEL TYPE	PERSONNEL NO.	AGE #1	AGE #2
614	NOC	14	159	85	1	--	--
615	NOC	14	120	85	1	--	--
616	NOC	14	105	85	1	--	--
617	NOC	14	78	85	1	--	--

** THESE ARE SIMPLE REPAIR PROCED., THEREFORE NO NETWORKS FOLLOW

III.1 7.153 LRU #638 - 23000 -- BASIC J79 TURBO JET ENGINE -

SRU NO	RP NO	TIME MIN	PERSONNEL TYPE	PERSONNEL NO	AGE #1	AGE #2	ITEM PROB	SRU DESCRIPTION
	658	4050	87	4	75	--	1.00	(NTRS)
659		4050	87	4	75	--	.21	MAIN FUEL PUMP
	683	360	67	2	--	--	1.00	
	684	720	67	2	--	--	.90	
	685	360	18	1	--	--	.10	
660		4050	87	4	75	--	.17	CONTROL, MAIN FUEL
	686	120	67	2	--	--	1.00	
	687	360	87	2	--	--	.63	
	688	240	26	1	--	--	.37	
661		4050	87	4	75	--	.14	HOSE, AFTERBURNER
	689	240	67	2	--	--	1.00	
	690	270	87	2	--	--	.61	
	691	120	82	2	--	--	.27	
	692	60	18	1	--	--	.12	
662		4050	87	4	75	--	.11	CONTROL,FUEL AFTBURN
	693	138	67	2	--	--	1.00	
	694	252	87	2	--	--	.50	
	695	132	83	2	--	--	.29	
	696	288	86	2	--	--	.21	
663		4050	87	4	75	--	.09	INDICATOR,OIL PRESS
	697	222	87	2	--	--	1.00	
	698	408	87	2	--	--	.48	
	699	258	82	2	--	--	.31	
	700	120	18	1	--	--	.21	
664		4050	87	4	75	--	.07	INDIC,NOZZLE POSITION
	701	120	87	1	--	--	1.00	
	702	192	87	2	--	--	.81	
	703	234	82	2	--	--	.12	
	704	126	86	2	--	--	.07	
665		4050	87	4	75	--	.05	TRANSMIT,NOZZLE POSIT
	705	180	87	1	--	--	1.00	
	706	468	87	2	--	--	.44	
	707	252	21	3	--	--	.30	
	708	84	82	2	--	--	.26	
666		4050	87	4	75	--	.04	CASING ASSY, INNER
	709	288	87	2	--	--	1.00	
	710	372	87	2	--	--	.77	
	711	180	21	3	--	--	.19	
	712	120	82	2	--	--	.04	
667		4050	87	4	75	--	.03	GEARBOX ASSY, FRONT
	713	120	87	1	--	--	1.00	
	714	240	87	2	--	--	.86	
	715	228	83	2	--	--	.14	

LRU #638 (CONTINUED)

SRU NO	RP NO.	TIME MIN.	PERSONNEL TYPE	PERSONNEL NO	AGE #1	AGE #2	ITEM PROB	SRU DESCRIPTION
668		4050	87	4	75	--	.03	GEARBOX ASSY, REAR
	716	180	87	1	--	--	1.00	
	717	264	87	2	--	--	.83	
	718	180	21	3	--	--	.17	
669		4050	87	4	75	--	.02	STATOR ASSEMBLY
	719	198	87	2	--	--	1.00	
	720	372	87	2	--	--	.73	
	721	228	26	1	--	--	.27	
670		4050	87	4	75	--	.02	ROTOR ASSEMBLY
	722	120	87	2	--	--	1.00	
	723	360	87	2	--	--	.88	
	724	180	18	1	--	--	.12	
671		4050	87	4	75	--	.01	ROTOR & SEAL,TURBINE
	725	216	87	2	--	--	1.00	
	726	270	87	2	--	--	.87	
	727	210	19	1	--	--	.13	
672		4050	87	4	75	--	.01	FRAME ASSY, TURBINE
	728	96	87	2	--	--	1.00	
	729	192	87	2	--	--	.78	
	730	66	23	2	--	--	.22	

TOTAL NUMBER OF SRU'S = 14
TOTAL NUMBER OF SRU REPAIR PROCEDURES = 48

RESOURCE REQUIREMENTS
AIRCRAFT, PART AND SUPPORT EQUIPMENT REPAIR DATA

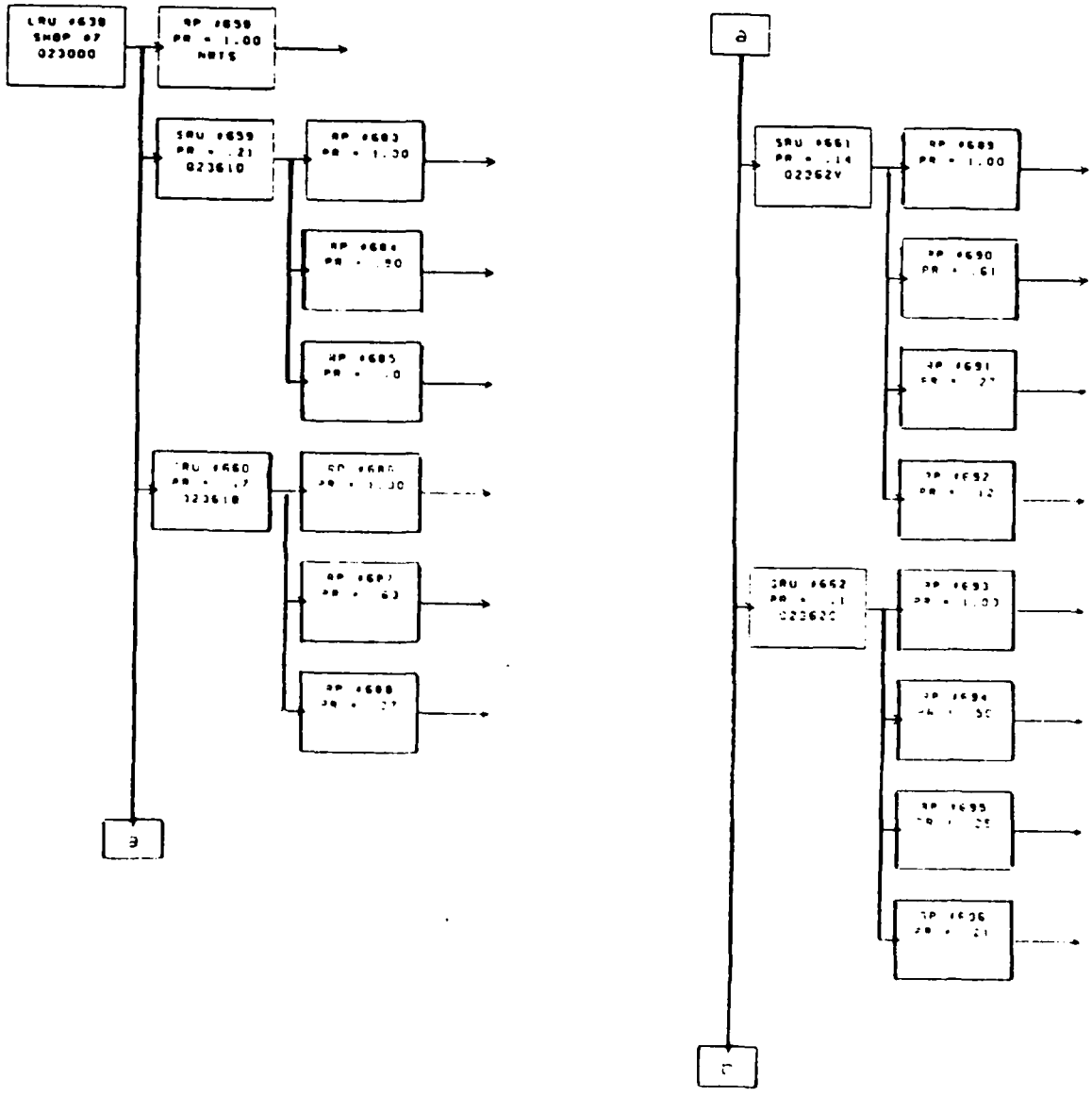

FIGURE 181a

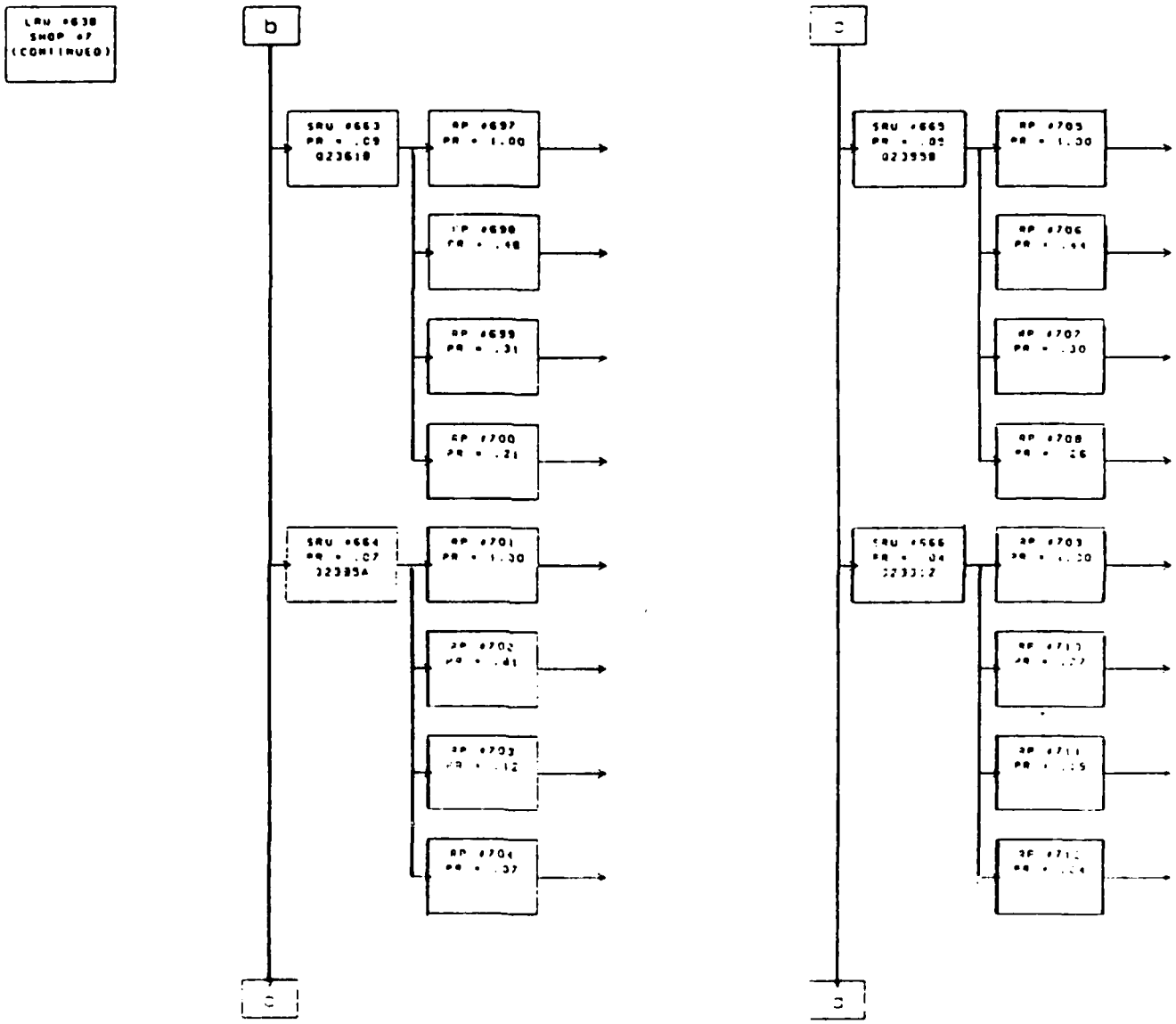
LRU #638
SHOP #7
(CONTINUED)
b
SRU #663
PR = .09
023618
RP #697
PR = 1.00
RP #698
PR = .48
RP #699
PR = .31
RP #700
PR = .21
SRU #664
PR = .07
32385A
RP #701
PR = 1.30
RP #702
PR = .41
RP #703
PR = .12
RP #704
PR = .37
c
c
SRU #665
PR = .05
023958
RP #705
PR = 1.30
RP #706
PR = .44
RP #707
PR = .30
RP #708
PR = .26
SRU #666
PR = .04
RP #703
PR = 1.30
RP #713
PR = .27
RP #711
PR = .15
RP #712
PR = .14
c

FIGURE 181b

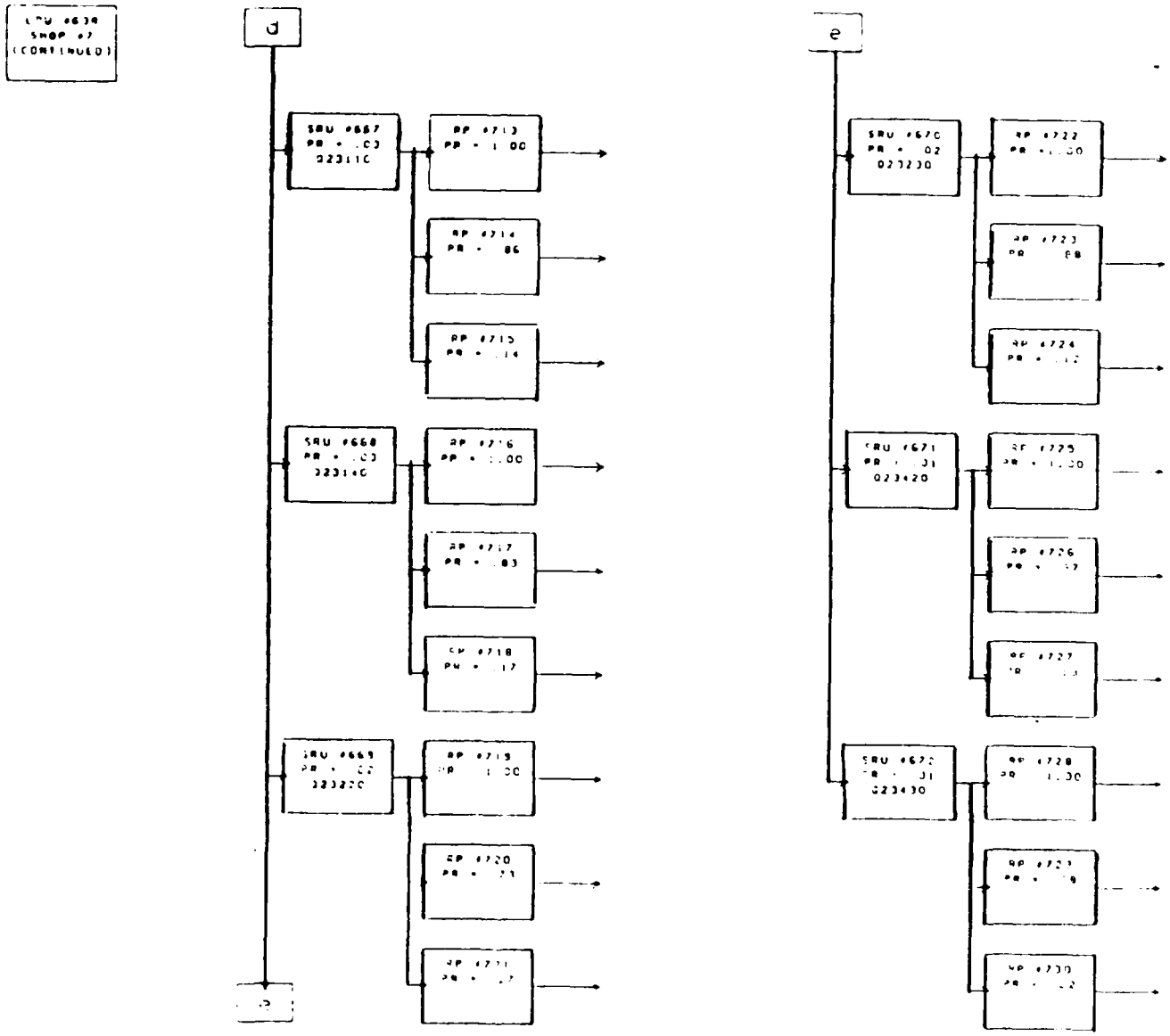
SHOP #7
(CONTINUED)
d
e
SRU #667
RP #713
RP #714
RP #715
SRU #668
RP #716
RP #717
RP #718
RP #719
RP #720
SRU #670
RP #722
RP #723
RP #724
SRU #671
RP #725
RP #726
RP #727
RP #728
RP #730

FIGURE 181c

III.1.8 TASK TIME MODIFIERS (CARD TYPE #17/2)

III.1.8.1 HURRY FACTORS -

TASK CATAGORY	HURRY FACTOR	EXPLANATION
ON-EQUIPMENT	100	ON-EQUIPMENT TASK TIMES ARE BASED ON PEACE-TIME RATES 0% FASTER TIMES ARE EXPECTED IN A WARTIME ENVIRONMENT
PREFLIGHT	100	PREFLIGHT TASK TIMES ARE BASED ON PEACE-TIME RATES 0% FASTER TIMES ARE EXPECTED IN A WARTIME ENVIRONMENT
PART/EQUIPMENT	100	PART/EQUIPMENT TASK TIMES ARE BASED ON PEACE-TIME RATES. 0% FASTER TIMES ARE EXPECTED IN A WARTIME ENVIRONMENT.
MUNITION ASSEMBLY	100	MUNITION ASSEMBLY TASK TIMES ARE BASED ON PEACE-TIME RATES. 0% FASTER TIMES ARE EXPECTED IN A WARTIME ENVIRONMENT.
CE REPAIRS	100	CE REPAIR TASKS TIMES ARE BASED ON PEACE-TIME RATES. 0% FASTER TIMES ARE EXPECTED IN A WARTIME ENVIRNONMENT.

III.1.8.2 REDUCE TIMES -

TASK CATAGORY	REDUCE TIMES	EXPLANATION
ON-EQUIPMENT	0	
PREFLIGHT	0	
PART/EQUIPMENT	0	
MUNITION ASSEMBLY	0	
CE REPAIRS	0	

III.1.6.3 SAVE TIMES -

TASK CATAGORY	SAVE TIMES	EXPLANATION
ON-EQUIPMENT	0	
PREFLIGHT	0	
PART/EQUIPMENT	0	
MUNITION ASSEMBLY	0	
CE REPAIRS	0	

III 1.9 AIRCRAFT DATA (CARD TYPES #15/1, #15/2, #15/3)

III 1.9.1 GENERAL DATA -

AIRCRAFT TYPE 1 (F-4E)

POST-FLIGHT DELAY	PRE-FLIGHT DELAY	FUEL QUAN	FUELING TASK #	NUMBER MISSION	NOMINAL UNSCHEL TIME	NOMINAL CYCLE TIME	1st PART LOCATION
0	0	4	1400	4	30	100	1

LOAD TYPE	TEAM #	SPEC #1	AGE #2	TRANSFER DELAY	BATTLE FIRST	DAMAGE LAST	AIRBASE FIRST	DAMAGE LAST
26	3	60	56	60	1411	1412	1441	1441

BATTLE DAMAGE SPARES SORTIES/AC	ALERT AIRCRAFT PERSONEL TYPE	#	EQUIPMENT TYPE	#	REAR MAINT BASE	ELIGIBLE FOR QRA	AIR/AIR MISSION
0	0	0	0	0	0	0	1

PHASED MAINTENANCE

AIRCRAFT TYPE	INSPECTION FREQUENCY	TASK ROOT SEGMENT
1	25 HRS	1501
1	50 HRS	1502
1	150 HRS	1503
1	300 HRS	1504
1	600 HRS	1505

III 1 9 2 BASE DATA (CARD TYPE #17/1) -

BASE 1 IS THE MOB ORGANIZED UNDER AFR 66-1 AND THE TASK DATA IS PREPARED FOR A COMO (AFR 66-5) ORGANIZATION.

CROSS-TRAINED PERSONNEL	TASK-ASSIST-QUALIFIED PERSONNEL	WEAPON ASSEMBLY TASKS	NUMBER OF AC SHELTERS	AC PER SHELTER
1	1	3	67	1 0

NUMBER OF ALERT AC SHELTERS	POL CAPACITY	FUEL TRUCK EQUIP #	NUMBER OF AC LOADS PER FUEL TRUCK	FUEL TRUCK REFILL TIME
0	32750	80	6	45

AVERAGE TAXI TIME	EXTRA AC SHELTER TIME	METEROLOGICAL STATE
12	0	2

CHAPTER IV

INITIAL STOCKS AND STATUS OF AIRBASE RESOURCES

IV 1 AIRCRAFT

IV 1.1 AIRCRAFT ASSIGNMENT BY BASE (CARD TYPE #20)

BASE#	BASE DESCRIPTION	A/C TYPE	#AIRCRAFT	#SQUADRONS	#CREWS
1	MOB	F-4E	72	3	90
2	REAR MAINTENANCE	F-4E	0	0	0
(77)	FILLER POOL	F-4E	150	0	60

IV.1.2 AIRCRAFT INITIAL STATUS (CARD TYPE #41)

BASE#	MISSION#	# ASSIGNED AIRCRAFT
1	1	0
1	2	0
1	3	72
1	4	0

IV.1.3 AIRCRAFT INITIAL MAINTENANCE STATUS (CARD TYPE #42)

SINCE THERE IS NO CARD TYPE #42 IN THE DATA BASE, ALL AIRCRAFT ARE ASSUMED TO COMPLETELY ARMED AND READY FOR THE INITIAL MISSION WITH NO INTIAL MAINTENANCE REQUIRMENTS.

IV.2 PERSONNEL DATA

IV.2 1 PERSONNEL LIST (CARD TYPE #21)

BASE #1 (MOB)

PERSONNEL TYPE	SHOP	AFSC	DESCRIPTION	TOTAL ACTUAL	TOTAL TARGETED	DAY SHIFT ACTUAL	DAY SHIFT TARGETED	MIN SIZE
1	1	431X1C	FLIGHTLINE	100	98	60	58	3
2	2	427X5	AIRFRAME REPAIR	6	6	3	3	2
3	3	423X0	ELECTRICAL SYS	7	7	4	4	2
4	4	423X1	ENVIRONMENTAL SYS	6	6	3	3	2
6	6	423X4	PNEUDRAULICS	7	7	4	4	2
7	7	426X2	ENGINE	16	16	8	8	4
8	8	325X0	AUTOPILOT	4	4	2	2	2
9	9	325X1	AVIONICS INST	6	6	3	3	2
11	11	431X1C	WHEEL/TIRE	6	6	4	4	2
12	12	328X0	RADIO COMM	6	6	3	3	2
13	13	328X1	RADAR NAVIGATION	4	4	2	2	2
16	16	321X2Q	FIRE CONTROL	18	18	9	9	2
18	18	427X0	MACHINIST	7	7	4	4	2
19	19	427X4	WELDER	7	7	4	4	2
20	20	404X1	CAMERA	2	2	2	2	2
21	21	431X1C	HEAVY REPAIR	28	28	18	16	4
22	30	316X1L	MISSILE MAINT	24	24	12	12	3
23	23	423X3	FUEL SYSTEMS	23	23	14	14	2
25	24	531X5	N.D.I.	5	5	3	3	2
26	24	531X4	CORROSION CONTROL	11	11	7	7	2
27	28	462G0	GUN SERVICE	61	61	36	36	4
28	28	462L0	LOADER	210	96	160	73	4
29	28	322X2	PAVE SPIKE	10	10	6	6	3
30	30	461X0	MUNITIONS MAINT	112	96	75	64	3
31	1	431X1C	FLIGHTLINE	100	98	60	58	3
32	2	427X5	AIRFRAME REPAIR	6	6	3	3	2
33	3	423X0	ELECTRICAL SYS	7	7	4	4	2
34	4	423X1	ENVIRONMENTAL SYS	6	6	3	3	2
36	6	423X4	PNEUDRAULICS	7	7	4	4	2
37	7	426X2	ENGINE	16	16	8	8	4
38	8	325X0	AUTOPILOT	4	4	2	2	2
39	9	325X1	AVIONICS INST	6	6	3	3	2
41	2		GENERAL PURPOSE	6	6	3	3	1
42	12	328X0	RADIO COMM	6	6	3	3	2
43	13	328X1	RADAR NAVIGATION	4	4	2	2	2
46	16	321X2Q	FIRE CONTROL	18	18	9	9	2
51	1	431X1C	FLIGHTLINE	100	98	60	58	3
52	2	427X5	AIRFRAME REPAIR	6	6	3	3	2
53	3	423X0	ELECTRICAL SYS	7	7	4	4	2
54	4	423X1	ENVIRONMENTAL SYS	6	6	3	3	2
56	6	423X4	PNEUDRAULICS	7	7	4	4	2
57	7	426X2	ENGINE	16	16	8	8	4
58	8	325X0	AUTOPILOT	4	4	2	2	2
59	9	325X1	AVIONICS INST	6	6	3	3	2
62	12	328X0	RADIO COMM	6	6	3	3	2
63	13	328X1	RADAR NAVIGATION	4	4	2	2	2
66	16	321X2Q	FIRE CONTROL	18	18	9	9	2
70	17	462W0	WEAPON CONTROL	24	24	12	12	2
75	5	423X2	EGRESS	27	27	14	14	2
78	15	328X4	INERTIAL SYSTEMS	29	29	14	14	1
79	16	321X2Q	FIRE CONTROL	31	31	16	16	2
80	12	328X0	RADIO COMM	6	6	3	3	1

INITIAL STOCKS AND STATUS OF AIRBASE RESOURCES
PERSONNEL DATA

BASE #1 (MOB) (CONTINUED)

PERSONNEL TYPE	SHOP	AFSC	DESCRIPTION	TOTAL ACTUAL	TOTAL TARGETED	DAY SHIFT ACTUAL	DAY SHIFT TARGETED	MIN SIZE
81	13	328X1	RADAR NAVIGATION	12	12	6	6	1
82	2	427X5	AIRFRAME REPAIR	16	16	8	8	2
83	3	423X0	ELECTRICAL SYS	9	9	5	5	1
84	4	423X1	ENVIRONMENTAL SYS.	4	4	2	2	1
85	14	328X3	E C M	64	64	36	36	1
86	6	423X4	PNEUDRAULICS	7	7	4	4	2
87	7	426X2	ENGINE	51	51	34	34	2
88	8	325X0	AUTOPILOT	4	4	2	2	1
89	9	325X1	AVIONICS INST	5	5	3	3	1
90	10	322X2	SENSORS	14	14	8	8	1
99	22			64	64	32	32	22
100	1		SECURITY POLICE	200	20	100	10	1
102	1		GENERAL SUPPORT	100	20	50	10	1
103	1		OPS PERSONNEL	100	20	50	10	1
104	1		COMMUNICATIONS	50	50	25	25	1
191	30		CE/RRR	8	8	4	4	2
192	30		CE/RRR	120	80	60	40	20
193	30		CE/RRR	12	12	6	6	3
194	30		CE/RRR	72	72	36	36	18
195	30		CE/RRR	24	24	12	12	6
196	30		CE/RRR	24	24	12	12	6
197	30		CE/RRR	120	80	60	40	20
198	30		CE/RRR	60	60	30	30	15

BASE #2 (REAR MAINTENANCE)

PERSONNEL TYPE	SHOP	AFSC	DESCRIPTION	TOTAL ACTUAL	TOTAL TARGETED	DAY SHIFT ACTUAL	DAY SHIFT TARGETED	MIN SIZE
1	1	431X1C	FLIGHLINE	20	20	10	58	3
2	2	427X5	AIRFRAME REPAIR	4	4	2	2	2
3	3	423X0	ELECTRICAL SYS	4	4	2	2	2
4	4	423X1	ENVIRONMENTAL SYS	4	4	2	2	2
6	6	423X4	PNEUDRAULICS	4	4	2	2	2
7	7	426X2	ENGINE	8	8	4	4	4
8	8	325X0	AUTOPILOT	4	4	2	2	2
9	9	325X1	AVIONICS INST	4	4	2	2	2
11	11	431X1C	WHEEL/TIRE	4	4	2	2	2
12	12	328X0	RADIO COMM	4	4	2	2	2
13	13	328X1	RADAR NAVIGATION	4	4	2	2	2
16	16	321X20	FIRE CONTROL	4	4	2	2	2
18	18	427X0	MACHINIST	4	4	2	2	2
19	19	427X4	WELDER	4	4	2	2	2
20	20	404X1	CAMERA	2	2	2	2	2
21	21	431X1C	HEAVY REPAIR	8	8	4	4	4
23	23	423X3	FUEL SYSTEMS	4	4	2	2	2
24	24	582X1	PARACHUTE	4	4	2	2	2
25	24	531X5	N.D.I.	4	4	2	2	2
26	24	531X4	CORROSION CONTROL	4	4	2	2	2
27	28	462G0	GUN SERVICE	8	8	4	36	3
28	28	462L0	LOADER	12	12	6	6	3
29	28	322X2	PAVE SPIKE	4	4	2	2	2
41	2		GENERAL PURPOSE	2	2	1	1	1
70	17	462W0	WEAPON CONTROL	12	12	6	6	2
75	5		EGRESS	6	6	4	4	2
78	15	328X4	INERTIAL SYS	6	6	4	4	1
79	16	321X20	FIRE CONTROL	3	3	2	2	1
80	12	328X0	RADIO COMM	2	2	1	1	1

INITIAL STOCKS AND STATUS OF AIRBASE RESOURCES
PERSONNEL DATA

BASE #2 (REAR MAINTENANCE) (CONTINUED)

PERSONNEL TYPE	SHOP	AFSC	DESCRIPTION	TOTAL ACTUAL	TOTAL TARGETED	DAY SHIFT ACTUAL	DAY SHIFT TARGETED	MIN SIZE
81	13	328X1	RADAR NAVIGATION	2	2	1	1	1
82	2	427X5	AIRFRAME REPAIR	4	4	2	2	2
83	3	423X0	ELECTRICAL SYS	2	2	1	1	1
84	4	423X1	ENVIRONMENTAL SYS	2	2	1	1	1
85	14	328X3	E.C.M.	12	12	6	6	1
86	6	423X4	PNEUDRAULICS	2	2	1	1	1
87	7	426X2	JET ENGINE	4	4	2	2	2
88	8	325X0	AUTOPILOT	4	4	2	2	1
89	9	325X1	AVIONICS INST	2	2	1	1	2
90	10	322X2	SENSORS	2	2	1	1	1

IV.2.2 EQUIVALENT PERSONNEL (CARD TYPE #45/1)

PERSONNEL TYPE	AFSC	PERSONNEL DESCRIPTION	SQUADRON #2	SQUADRON #3	WING LEVEL
(SQUAD #1)					
1	431X1C	FLIGHTLINE	31	51	--
2	427X5	AIRFRAME REPAIR	32	52	82
3	423XO	ELECTRICAL SYS	33	53	83
4	423X1	ENVIRONMENT SYS	34	54	84
6	423X4	PNEUDRAULIC	36	56	86
7	426X2	ENGINE	37	57	87
8	326X4	AUTOPILOT	38	58	88
9	325X1	AVIONICS INST	--	--	--
11	431W1C	WHEEL & TIRE	--	--	--
12	328XO	RADIO COMM	42	62	80
13	328X1	RADAR NAVIGATION	43	63	81
16	321X2Q	FIRE CONTROL	46	66	79
18	427XO	MACHINIST	--	--	--
19	427X4	WELDER	--	--	--
20	404X1	CAMERA	--	--	--
21	431X1C	HEAVY REPAIR	--	--	--
22	316X1L	MISSILE MAINT	--	--	--
23	423X3	FUEL SYSTEMS	--	--	--
25	531X5	N.D.I.	--	--	--
26	531X4	CORROSION CONTROL	--	--	--
27	462GO	GUN SERVICE	--	--	--
28	462LD	LOADER	--	--	--
29	322X2	PAVE SPIKE	--	--	--
30	461XO	MUNITIONS MAINT	--	--	--

PERSONNEL TYPE	AFSC	PERSONNEL DESCRIPTION	SQUADRON #1	SQUADRON #3	WING LEVEL
(SQUAD #2)					
31	431X1C	FLIGHTLINE	1	51	--
32	427X5	AIRFRAME REPAIR	2	52	82
33	423XO	ELECTRICAL SYS	3	53	83
34	423X1	ENVIRONMENTAL SYS	4	54	84
36	423X4	PNEUDRAULICS	6	56	86
37	426X2	ENGINE	7	57	87
38	325XO	AUTOPILOT	8	58	88
39	325X1	AVIONICS INST	--	--	--
41		GENERAL PURPOSE	--	--	--
42	328XO	RADIO COMM	12	62	80
43	328X1	RADAR NAVIGATION	13	63	81
46	321X2Q	FIRE CONTROL	16	66	79

INITIAL STOCKS AND STATUS OF AIRBASE RESOURCES
PERSONNEL DATA

EQUIVALENT PERSONNEL (CONTINUED)

PERSONNEL TYPE	AFSC	PERSONNEL DESCRIPTION	SQUADRON #1	SQUADRON #2	WING LEVEL
(SQUAD #3)					
51	431X1C	FLIGHTLINE	1	31	81
52	427X5	AIRFRAME REPAIR	2	32	82
53	423XO	ELECTRICAL SYS	3	33	83
54	423X1	ENVIRONMENTAL SYS	4	34	84
56	423X4	PNEUDRAULICS	6	36	86
57	426X2	ENGINE	7	37	87
58	325XO	AUTOPILOT	8	38	88
59	325X1	AVIONICS INST	--	--	--
62	328XO	RADIO COMM	12	42	80
63	328X1	RADAR NAVIGATION	13	43	81
66	321X2Q	FIRE CONTROL	16	46	79
70	462WO	WEAPON CONTROL	--	--	--
75	423X2	EGRESS	--	--	--
78	328X4	INERTIAL SYSTEMS	--	--	--

PERSONNEL TYPE	AFSC	PERSONNEL DESCRIPTION	SQUADRON #1	SQUADRON #2	SQUADRON #3
(WING)					
79	321X2Q	FIRE CONTROL	16	46	66
80	328XO	RADIO COMM	12	42	62
81	328X1	RADAR NAVIGATION	13	43	63
82	427X5	AIRFRAME REPAIR	2	32	52
83	423XO	ELECTRICAL SYS	3	33	53
84	423X1	ENVIRONMENTAL SYS	4	34	54
85	328X3	E.C.M.	--	--	--
86	423X4	PNEUDRAULICS	6	36	86
87	426X2	ENGINE	7	37	87
88	325XO	AUTOPILOT	8	38	88
89	325X1	AVIONICS INST	--	--	--
90	322X2	SENSORS	--	--	--
99			--	--	--
100		SECURITY POLICE	--	--	--
102		GENERAL SUPPORT	--	--	--
103		OPS PERSONNEL	--	--	--
104		COMMUNICATIONS	--	--	--
191		CE/RRR	--	--	--
192		CE/RRR	--	--	--
193		CE/RRR	--	--	--
194		CE/RRR	--	--	--
195		CE/RRR	--	--	--
196		CE/RRR	--	--	--
197		CE/RRR	--	--	--
198		CE/RRR	--	--	--
200		CE/RRR	--	--	--

IV.2.3 CROSSED TRAINED PERSONNEL (CARD TYPE #45/2)

PERSONNEL TYPE	AFSC	PERSONNEL DESCRIPTION	CROSS TRAINED TYPES #1	#2	#3	#4	#5
1	431X1C	FLIGHTLINE	4	6	7	2	--
2	427X5	AIRFRAME REPAIR	--	--	--	--	--
3	423X0	ELECTRICAL SYS	--	--	--	--	--
4	423X1	ENVIRONMENT SYS	--	--	--	--	--
6	423X4	PNEUDRAULICS	--	--	--	--	--
7	426X2	ENGINE	--	--	--	--	--
8	326X4	AUTOPILOT	--	--	--	--	--
9	325X1	AVIONICS INST	12	16	85	13	--
11	431W1C	WHEEL/TIRE	--	--	--	--	--
12	328X0	RADIO COMM	--	--	--	--	--
13	328X1	RADAR NAVIGATION	12	9	16	85	--
16	326X6C	FIRE CONTROL	12	9	85	13	--
18	427X0	MACHINIST	--	--	--	--	--
19	427X4	WELDER	--	--	--	--	--
20	404X1	CAMERA	--	--	--	--	--
21	431X1C	HEAVY REPAIR	--	--	--	--	--
22	316X1L	MISSILE MAINT	--	--	--	--	--
23	423X3	FUEL SYSTEMS	--	--	--	--	--
25	531X5	N.D.I.	--	--	--	--	--
26	531X4	CORROSION CONTROL	--	--	--	--	--
27	462G0	GUN SERVICE	--	--	--	--	--
28	462L0	LOADER	--	--	--	--	--
29	322X2	PAVE SPIKE	--	--	--	--	--
30	461X0	MUNITIONS MAINT	50	--	--	--	--
31	431X1C	FLIGHTLINE	--	--	--	--	--
32	427X5	AIRFRAME REPAIR	--	--	--	--	--
33	423X0	ELECTRICAL SYS	--	--	--	--	--
34	423X1	ENVIRONMENTAL SYS	--	--	--	--	--
36	423X4	PNEUDRAULICS	--	--	--	--	--
37	426X2	ENGINE	--	--	--	--	--
38	325X0	AUTOPILOT	--	--	--	--	--
39	325X1	AVIONICS INST	--	--	--	--	--
41		GENERAL PURPOSE	2	--	--	--	--
42	328X0	RADIO COMM	--	--	--	--	--
43	328X1	RADAR NAVIGATION	--	--	--	--	--
46	321X2Q	FIRE CONTROL	--	--	--	--	--
51	431X1C	FLIGHTLINE	--	--	--	--	--
52	427X5	AIRFRAME REPAIR	--	--	--	--	--
53	423X0	ELECTRICAL SYS	--	--	--	--	--
54	423X1	ENVIRONMENTAL SYS	--	--	--	--	--
56	423X4	PNEUDRAULICS	--	--	--	--	--
57	426X2	ENGINE	--	--	--	--	--
58	325X0	AUTOPILOT	--	--	--	--	--
59	325X1	AVIONICS INST	--	--	--	--	--
62	328X0	RADIO COMM	--	--	--	--	--
63	328X1	RADAR NAVIGATION	--	--	--	--	--
66	321X2Q	FIRE CONTROL	--	--	--	--	--
70	462W0	WEAPON CONTROL	--	--	--	--	--
75	423X2	EGRESS	--	--	--	--	--
78	328X4	INERTIAL SYSTEMS	--	--	--	--	--
79	321X2Q	FIRE CONTROL	--	--	--	--	--
80	328X0	RADIO COMM	--	--	--	--	--
81	328X1	RADAR NAVIGATION	--	--	--	--	--
82	427X5	AIRFRAME REPAIR	--	--	--	--	--
83	423X0	ELECTRICAL SYS	--	--	--	--	--

CROSS TRAINED PERSONNEL (CONTINUED)

PERSONNEL TYPE	AFSC	PERSONNEL DESCRIPTION	CROSS TRAINED TYPES #1	#2	#3	#4	#5
84	423X1	ENVIRONMENTAL SYS	--	--	--	--	--
85	328X3	E.C.M.	--	--	--	--	--
86	423X4	PNEUDRAULICS	--	--	--	--	--
87	426X2	ENGINE	--	--	--	--	--
88	325X0	AUTOPILOT	--	--	--	--	--
89	325X1	AVIONICS INST	--	--	--	--	--
90	322X2	SENSORS	--	--	--	--	--
99			--	--	--	--	--
100		SECURITY POLICE	--	--	--	--	--
102		GENERAL SUPPORT	--	--	--	--	--
103		OPS PERSONNEL	--	--	--	--	--
104		COMMUNICATIONS	--	--	--	--	--
191		CE/RRR	--	--	--	--	--
192		CE/RRR	--	--	--	--	--
193		CE/RRR	--	--	--	--	--
194		CE/RRR	--	--	--	--	--
195		CE/RRR	--	--	--	--	--
196		CE/RRR	--	--	--	--	--
197		CE/RRR	--	--	--	--	--
198		CE/RRR	--	--	--	--	--
200		CE/RRR	--	--	--	--	--

IV.2.4 TASK-ASSIST PERSONNEL (CARD TYPE #45/3)

PERSONNEL TYPE	AFSC	PERSONNEL DESCRIPTION	TASK-ASSIST TYPES #1	#2	#3	#4	#5
1	431X1C	FLIGHTLINE	--	--	--	--	--
2	427X5	AIRFRAME REPAIR	1	21	--	--	--
3	423XO	ELECTRICAL SYS	--	--	--	--	--
4	423X1	ENVIRONMENT SYS	--	--	--	--	--
6	423X4	PNEUDRAULICS	--	--	--	--	--
7	426X2	ENGINE	--	--	--	--	--
8	326X4	AUTO PILOT	--	--	--	--	--
9	325X1	AVIONICS INST	13	--	--	--	--
11	431W1C	WHEEL/TIRE	--	--	--	--	--
12	328XO	RADIO COMM	--	--	--	--	--
13	328X1	RADAR NAVIGATION	--	--	--	--	--
16	326X6C	FIRE CONTROL	--	--	--	--	--
18	427XO	MACHINIST	--	--	--	--	--
19	427X4	WELDER	--	--	--	--	--
20	404X1	CAMERA	--	--	--	--	--
21	431X1C	HEAVY REPAIR	2	1	--	--	--
22	316X1L	MISSILE MAINT	30	--	--	--	--
23	423X3	FUEL SYSTEMS	--	--	--	--	--
25	531X5	N.D.I.	--	--	--	--	--
26	531X4	CORROSION CONTROL	--	--	--	--	--
27	462GO	GUN SERVICE	28	--	--	--	--
28	462LO	LOADER	--	--	--	--	--
29	322X2	PAVE SPIKE	--	--	--	--	--
30	461XO	MUNITIONS MAINT	--	--	--	--	--
31	431X1C	FLIGHTLINE	--	--	--	--	--
32	427X5	AIRFRAME REPAIR	--	--	--	--	--
33	423XO	ELECTRICAL SYS	--	--	--	--	--
34	423X1	ENVIRONMENTAL SYS	--	--	--	--	--
36	423X4	PNEUDRAULICS	--	--	--	--	--
37	426X2	ENGINE	--	--	--	--	--
38	325XO	AUTOPILOT	--	--	--	--	--
39	325X1	AVIONICS INST	--	--	--	--	--
41		GENERAL PURPOSE	2	--	--	--	--
42	328XO	RADIO COMM	--	--	--	--	--
43	328X1	RADAR NAVIGATION	--	--	--	--	--
46	321X2Q	FIRE CONTROL	--	--	--	--	--
51	431X1C	FLIGHTLINE	--	--	--	--	--
52	427X5	AIRFRAME REPAIR	--	--	--	--	--
53	423XO	ELECTRICAL SYS	--	--	--	--	--
54	423X1	ENVIRONMENTAL SYS	--	--	--	--	--
56	423X4	PNEUDRAULICS	--	--	--	--	--
57	426X2	ENGINE	--	--	--	--	--
58	325XO	AUTOPILOT	--	--	--	--	--
59	325X1	AVIONICS INST	--	--	--	--	--
62	328XO	RADIO COMM	--	--	--	--	--
63	328X1	RADAR NAVIGATION	--	--	--	--	--
66	321X2Q	FIRE CONTROL	--	--	--	--	--
70	462WO	WEAPON CONTROL	--	--	--	--	--
75	423X2	EGRESS	--	--	--	--	--
78	328X4	INERTIAL SYSTEMS	--	--	--	--	--
79	321X2Q	FIRE CONTROL	--	--	--	--	--
80	328XO	RADIO COMM	--	--	--	--	--
81	328X1	RADAR NAVIGATION	--	--	--	--	--
82	427X5	AIRFRAME REPAIR	--	--	--	--	--
83	423XO	ELECTRICAL SYS	--	--	--	--	--

INITIAL STOCKS AND STATUS OF AIRBASE RESOURCES
PERSONNEL DATA

TASK-ASSIST PERSONNEL (CONTINUED)

PERSONNEL TYPE	AFSC	PERSONNEL DESCRIPTION	TASK-ASSIST TYPES #1	#2	#3	#4	#5
84	423X1	ENVIRONMENTAL SYS	--	--	--	--	--
85	328X3	E.C.M.	--	--	--	--	--
86	423X4	PNEUDRAULICS	--	--	--	--	--
87	426X2	ENGINE	--	--	--	--	--
88	325XO	AUTOPILOT	--	--	--	--	--
89	325X1	AVIONICS INST	--	--	--	--	--
90	322X2	SENSORS	--	--	--	--	--
99			--	--	--	--	--
100		SECURITY POLICE	--	--	--	--	--
102		GENERAL SUPPORT	--	--	--	--	--
103		OPS PERSONNEL	--	--	--	--	--
104		COMMUNICATIONS	--	--	--	--	--
191		CE/RRR	--	--	--	--	--
192		CE/RRR	--	--	--	--	--
193		CE/RRR	--	--	--	--	--
194		CE/RRR	--	--	--	--	--
195		CE/RRR	--	--	--	--	--
196		CE/RRR	--	--	--	--	--
197		CE/RRR	--	--	--	--	--
198		CE/RRR	--	--	--	--	--
200		CE/RRR	--	--	--	--	--

IV.3 SUPPORT EQUIPMENT

IV.3.1 AGE LIST (CARD TYPES #22 AND #46)

BASE #	SHOP	AGE TYPE	DESCRIPTION	TOTAL ACTUAL	TOTAL TARGETED	EQUIVALENT AGE #1	EQUIVALENT AGE #2	EQUIVALENT AGE #3
1	1	1	FUEL HYDRANT	2	2	11	21	--
1	22	2	OIL CART	9	9	12	22	--
1	22	3	HYDRAULIC MULE	6	6	13	23	--
1	22	4	TOW BAR	7	7	14	24	--
1	1	11	FUEL HYDRANT	2	2	1	21	--
1	22	12	OIL CART	8	8	2	22	--
1	22	13	HYDRAULIC MULE	6	6	3	23	--
1	22	14	TOW BAR	6	6	4	24	--
1	1	21	FUEL HYDRANT	2	2	1	11	--
1	22	22	OIL CART	8	8	2	12	--
1	22	23	HYDRAULIC MULE	6	6	3	13	--
1	22	24	TOW BAR	6	6	4	14	--
1	22	41	LOX CART	12	12	--	--	--
1	22	42	NITROGEN	13	13	--	--	--
1	22	43	B-1 STAND	24	24	--	--	--
1	22	44	B-4 STAND	24	24	--	--	--
1	22	45	C-1 STAND	28	28	--	--	--
1	22	46	GUN LOADER	12	12	--	--	--
1	22	47	NE-2 LIGHT	70	70	--	--	--
1	22	48	H-1 HEAVY	29	29	--	--	--
1	22	49	ANAWA-6	18	18	--	--	--
1	22	50	MC-2A LIGHT	18	18	--	--	--
1	22	51	MC-1A HEAVY	21	21	--	--	--
1	22	52	15 TON JACK	20	20	--	--	--
1	22	53	20 TON JACK	45	45	--	--	--
1	22	54	370 GAL TANK	45	45	--	--	--
1	22	55	600 GAL TANK	10	10	--	--	--
1	22	56	TTU-228	3	3	--	--	--
1	22	57	AFM32T	3	3	--	--	--
1	22	58	AM24T-8	2	2	--	--	--
1	22	59	AM32C-1	7	7	--	--	--
1	22	60	AM32A-60	47	47	--	--	--
1	22	65	MJ1-A B	36	36	--	--	--
1	22	66	MHU-83	24	24	--	--	--
1	22	73	ENGINE CART	5	5	--	--	--
1	7	75	ENGINE STAND	5	5	--	--	--
1	22	76	MHU-12M	56	56	--	--	--
1	22	77	MHU-141	24	24	--	--	--
1	22	78	MHU-110	45	45	--	--	--
1	1	80	FUEL TRUCK	13	13	--	--	--
1	30	91	ORACLE	3	3	--	--	--
1	30	92	CATERPILLAR	6	6	--	--	--
1	30	93	4 YD	4	4	--	--	--
1	30	94	2.5 YD	4	4	--	--	--
1	30	95	DUMP TRUCK	15	15	--	--	--
1	30	96	EOD M-1	4	4	--	--	--
1	30	97	PICKUP	40	40	--	--	--
1	30	98	MISC RRR	60	60	--	--	--
1	30	99	FIRE TRUCK	5	5	--	--	--

AGE LIST (CONTINUED)

BASE #	SHOP	AGE TYPE	DESCRIPTION	TOTAL ACTUAL	TOTAL TARGETED
2	22	2	OIL CART	9	9
2	22	3	HYDRAULIC	6	6
2	22	4	TOW BAR	7	7
2	22	41	LOX CART	2	2
2	22	42	NITROGEN	2	2
2	22	43	B-1 STAND	2	2
2	22	44	B-4 STAND	2	2
2	22	45	C-1 STAND	2	2
2	22	46	GUN LOADER	2	2
2	22	47	NE-2 LIGHT	2	2
2	22	48	H-1 HEAVY	2	2
2	22	49	ANAWA-6	2	2
2	22	50	MC-2A LIGHT	2	2
2	22	51	MC-1A HEAVY	2	2
2	22	52	15 TON JACK	2	2
2	22	53	20 TON JACK	2	2
2	22	54	370 GAL TANK	2	2
2	22	55	600 GAL TANK	2	2
2	22	56	TTU-228	2	2
2	22	57	AFM32T	1	1
2	22	58	AM24T-8	1	1
2	22	59	AM32C-1	1	1
2	22	60	AM32A-60	2	2
2	22	65	MJ1-A B	2	2
2	22	66	MHU-83	2	2
2	22	76	MHU-12M	2	2
2	22	77	MHU-141	2	2
2	22	78	MHU-110	2	2
2	22	80	FUEL TRUCK	2	2

IV.4 SPARE PARTS

IV.4.1 LIST OF PARTS

** AG UNDER QUANTITY REPRESENTS AUTOMATICALLY GENERATED

PART NO	WUC CODE	PART DESCRIPTION	QUANTITY
1	Q1333C	TIRE, NOSE	AG
2	Q111AA	RADOME, NOSE	AG
3	Q111BJ	FAIRING, MUZZLE BLAST GROUP I	AG
4	Q111BM	FAIR, FORWARD NOSE LAND GEAR DOOR	AG
5	Q111BQ	NOT IN WUC MANUAL	AG
6	Q111C3	DOOR, HYDRAULIC & PNEUMATIC ACCESS	AG
7	Q111CA	NOT IN WUC MANUAL	AG
8	Q111CP	DOOR, DATA LINK ACCESS (19)	AG
9	Q111DC	DOOR, (26 L/R) GROUP II	AG
10	Q111FC	SEAL ASSY, PANEL AFT MISSILE CAVITY	AG
11	Q111FG	FAIR ASSY, AFT ENGINE KEEL, REMOV	AG
12	Q111FH	FAIR ASSY, AFT MISSILE WELL	AG
13	Q111FU	DOOR (39 R)	AG
14	Q111FY	AIR, CENTERLINE STORES RACK ACCES	AG
15	Q111G4	DOOR (74 L/R)	AG
16	Q111GA	DOOR, STARTER (138)	AG
17	Q111GC	DOOR, STARTER EXHAUST (78)	AG
18	Q111GQ	DOOR, FUEL & HYDRAU ACCESS (73 L/R)	AG
19	Q111GR	DOOR, ENGINE ACCESS (82 L/R)	AG
20	Q111GS	DOOR, ENGINE ACCESS (83 L/R)	AG
21	Q111GU	DOOR, ENGINE ACCESS (92 L/R)	AG
22	Q111HA	DOOR, ENGINE AIR & ACCESS (81 L/R)	AG
23	Q111HC	DOOR, ENGINE ACCESS (96 L/R)	AG
24	Q111HD	DOOR (37 L/R)	AG
25	Q111HE	DOOR (38 L/R)	AG
26	Q111HM	DOOR (54 L/R)	AG
27	Q111HQ	DOOR (80)	AG
28	Q111KD	TAIL CONE	AG
29	Q111KE	PANEL, JET BLAST NO. 1	AG
30	Q111KF	PANEL, JET BLAST NO. 2	AG
31	Q111KG	PANEL, JET BLAST NO. 3	AG
32	Q111KH	PANEL, JET BLAST NO. 4	AG
33	Q111KJ	PANEL, JET BLAST NO. 5	AG
34	Q111KT	PANEL ASSY, JET BLAST, TAIL CONE	AG
35	Q1122B	DOOR (75 L/R)	AG
36	Q1122L	DOOR (141 L/R)	AG
37	Q1123A	WING TIP ASSEMBLY, FOWARD	AG
38	Q112BL	DOOR, (141 L/R)	AG
39	Q1131J	VALVE, SERVO, L/R	AG
40	Q1132C	RING ASSY, VARIABLE BELLMOUTH	AG
41	Q1132D	ACTUATOR, BYPASS BELLMOUTH	AG
42	Q1133B	CYLINDER ASSEMBLY ACTUATOR	AG
43	Q1133D	VALVE ASSEMBLY, AUX AIR DOOR SYS	AG
44	Q1211R	PANEL PEDESTAL, COCKPIT	AG
45	Q1212A	CHARTBOARD AND COMPUTER STOWAGE CS	AG
46	Q1212F	FOOT RAMP ASSEMBLY	AG
47	Q1212G	FLOORING AND PANELS	AG
48	Q12265	CONTAINER, DROGUE (REMOVABLE)	AG
49	Q1231B	VALVE, PNEUMATIC SELECTOR (CANOPY)	AG
50	Q1231N	CANOPY AIR STORAGE BOTTLE	AG
51	Q1233K	CYLINDER, CANOPY PNEUMATIC, FORWAR	AG
52	Q1233P	CANOPY VISCOUS DAMPER, FORWARD	AG
53	Q1234B	DUMP VALVE, CANOPY EMERGENCY FORWAR	AG

SPARE PARTS (CONTINUED)

PART NO	WUC CODE	PART DESCRIPTION	QUANTITY
54	Q1234C	PNEUMATIC BOTTLE, EMERGENCY FORWARD	AG
55	Q1235O	AFT CANOPY ASSEMBLY	AG
56	Q1236K	PNEUMATIC CYLINDER, AFT	AG
57	Q1236N	CANOPY VISCOUS DAMPER, AFT	AG
58	Q1237B	DUMP VALVE, CANOPY EMERG AFT	AG
59	Q1237C	PNEUMATIC BOTTLE AFT	AG
60	Q1311C	SWIVELS, LANDING GEAR	AG
61	Q1312A	VALVE SELECTOR, P/N 14775-1	AG
62	Q1315C	BOTTLE, AIR, EMERGEN LAND GEAR	AG
63	Q1321A	SHOCK STRUT, MAIN LANDING GEAR	AG
64	Q1321H	CYLINDER, UPLOCK MAIN LAND GEAR	AG
65	Q1321M	SIDE BRACE ACTUATOR, MAIN LAND GEAR	AG
66	Q1322O	LANDING GEAR (LEFT)	AG
67	Q1322A	SHOCK STRUT, LANDING GEAR (LEFT)	AG
68	Q1322M	SIDE BRACE ACTUATOR, LAND GEAR LEFT	AG
69	Q1323O	MAIN LAND GEAR DOORS (RIGHT)	AG
70	Q1323A	CYLINDER, HYDRAUL INBRD DOOR RIGHT	AG
71	Q1323D	DOOR ASSY, GEAR STRUT (RIGHT)	AG
72	Q1323E	DOOR ASSY, OUTBOARD (RIGHT)	AG
73	Q1323F	DOOR ASSY, INBOARD (RIGHT)	AG
74	Q1324O	MAIN LAND GEAR DOORS (LEFT)	AG
75	Q1332O	NOSE GEAR DOOR AND UPLATCH MECHAN	AG
76	Q1332H	DOOR, NOSE LANDING GEAR, FORWARD	AG
77	Q1334A	COMPENSATOR, POWER UNIT, NOSE STEER	AG
78	Q1334B	POWER UNIT, STEERING	AG
79	Q1334J	VALVE, NOSE GEAR STEERING SELECTOR	AG
80	Q1341A	VALVE, BRAKE CONTROL	AG
81	Q1342B	BRAKE VALVE, MANUAL CONTROL	AG
82	Q1342E	ACCUMULATOR, EMERGENCY BRAKE	AG
83	Q1343A	VALVE, ANTI-SKID CONTROL	AG
84	Q1343B	CONTROL BOX, ANTI-SKID SYSTEM	AG
85	Q1343E	ANTI-SKID SENSOR	AG
86	Q1344O	BRAKE ASSEMBLY	AG
87	Q1344A	PRESSURE PLATE ASSEMBLY	AG
88	Q1344H	VALVE, SHUTTLE, BRAKE ASSEMBLY	AG
90	Q1344J	HOUSING, BRAKE ASSEMBLY	AG
91	Q1344K	BACKING PLATE, BRAKE ASSEMBLY	AG
92	Q1351A	ACTUATING CYLINDER, ARRESTING GEAR	AG
93	Q1352A	ARRESTING GEAR FAIRING ASSEMBLY	AG
94	Q1420O	LATERAL CONTROL SYSTEM	AG
95	Q1421O	AILERON ASSEMBLY	AG
96	Q1422A	L-H AILERON VISCUOS DAMPER	AG
97	Q1422B	AILERON POWER CONTROL CYLINDER	AG
98	Q1425B	OUTBOARD SPOILER POWER CYLINDER	AG
99	Q1425D	INBOARD SPOILER POWER CYLINDER	AG
100	Q1428A	LATERAL SERIES SERVO ACTUATOR	AG
101	Q1432F	STABILITOR CONTROL SYSTEM	AG
102	Q1436A	AUX POWER UNIT, HYDRAULIC	AG
103	Q1436D	MANIFOLD, AUX POWER SYSTEM,	AG
104	Q1441O	RUDDER	AG
105	Q1441A	HORN, RUDDER	AG
106	Q1442B	SERVO ACTUATOR, AILERON-RUDDER	AG
107	Q1442C	CYLINDER, POWER CONTROL	AG
108	Q1442D	HYDRAULIC DAMPER, RUDDER	AG
109	Q1442E	ROTARY DAMPER, RUDDER	AG
110	Q1442F	CYLINDER, POWER CONTROL P/N	AG
111	Q1455E	CYLINDER, TRAILING EDGE FLAP	AG

SPARE PARTS (CONTINUED)

PART NO	WUC CODE	PART DESCRIPTION	QUANTITY
112	Q1455N	AIR SPEED SWITCH, FLAP BLOW-UP	AG
113	Q1456A	AIR SELECTOR VALVE, EMERG FLAP	AG
114	Q1456B	AIR STORAGE BOTTLE	AG
115	Q1461O	SPEED BRAKE	AG
116	Q1461A	SPEED BRAKE UPPER SKIN	AG
117	Q1462D	CYLINDER, POWER SPEED BRAKE	AG
118	Q1462F	SWIVELS, HYDRAULIC	AG
119	Q148DA	VALVE, SLAT POSITION SELECTOR	AG
120	Q148DB	CONTROL UNIT ELECTRONIC SLATS	AG
121	Q148DH	ACTUATOR, INBOARD SLAT PNEUMATIC	AG
122	Q148DJ	ACTUATOR, OUTBOARD SLAT PNEUMATIC	AG
123	Q148DQ	SWIVEL ASSEMBLY	AG
124	Q4112B	COOLING TURBINE, CABIN REFRIDG	AG
125	Q4112N	CABIN MOISTURE SEPARATOR	AG
126	Q4112Q	CABIN ANTI-ICING CONTROL	AG
127	Q4114F	EQUIPMENT HEAT EXCHANGER	AG
128	Q4114G	EQUIPMENT COOLING TURBINE	AG
129	Q4114H	EJECTOR VALVE, GROUND COOL	AG
130	Q4114J	VALVE, TURBINE BY-PASS	AG
131	Q4115A	AIR FILTER, IN-LINE CADC	AG
132	Q4121F	REGULATOR, CABIN PRESSURE	AG
133	Q42110	MISC RELAY PANEL NO 1	AG
134	Q4211B	WHEEL WELL SWITCH PANEL	AG
135	Q42120	MISC RELAY PANEL NO. 2	AG
136	Q42130	MISC RELAY PANEL NO. 3	AG
137	Q42140	MISC RELAY PANEL NO. 4	AG
138	Q42150	MISC RELAY PANEL NO. 5	AG
139	Q42152	MISC RELAY PANEL NO. 6	AG
140	Q42160	CIRCUIT BREAKER PANEL NO. 1	AG
141	Q421D0	NOT IN WUC MANUAL	AG
142	Q42230	FREQ & LOAD CONTROL BOX 693134	AG
143	Q42240	FREQ & LOAD CONTROL BOX 538D888	AG
144	Q42330	BATTERY, NICKEL CADMIUM	AG
145	Q42610	GENERATOR, 30 KVA, 400 CYCLE 3	AG
146	Q42640	SUPERVISORY PANEL 21B30-5A	AG
147	Q42650	SUPERVISORY PANEL, 21B30-3CX	AG
148	Q4411B	PANEL ASSEMBLY, INTERIOR COCKPIT	AG
149	Q4411G	MASTER CAUTION LIGHT	AG
150	Q4411K	CONTROL PANEL CAUTION LIGHT	AG
151	Q4411M	LIGHTS, COCKPIT, FLOOD	AG
152	Q4412A	PANEL, COCKPIT INTER. LIGHT	AG
153	Q44220	FUSELAGE LIGHTS	AG
154	Q4423C	WING TIP TAPE LIGHTS	AG
155	Q4511A	RESERVOIR, HYDRAULIC NO. 1	AG
156	Q4511B	PUMP, HYDRAULIC (TCI) NO.1	AG
157	Q4511M	INDICATOR, HYDRAULIC PRESSURE	AG
158	Q4512A	RESERVOIR, HYDRAULIC NO.2	AG
159	Q4512B	PUMP, HYDRAULIC NO. 2	AG
160	Q4513A	RESERVOIR, UTILITY HYDRAULIC	AG
161	Q4513C	PUMP, HYDRAULIC (TCI) GROUP I	AG
162	Q4513L	HYDRAULIC FLOW REGULATOR	AG
163	Q4513N	PRESSURE INDICATOR, HYDRAULIC	AG
164	Q4513P	PRESSURE TRANSMITTER HYDRAULIC	AG
165	Q4521A	COMPRESSOR, HYDRAULIC DRIVEN	AG
166	Q4521C	SEPARATOR, MOISTURE, PNUEMATIC	AG
167	Q4521H	PUMP, OIL, AIR COMPRESSURE	AG
168	Q4624A	PYLON ASSEMBLY	AG

SPARE PARTS (CONTINUED)

PART NO	WUC CODE	PART DESCRIPTION	QUANTITY
169	Q4631D	AIR REFUEL ACTUAT RECEPTACLE	AG
170	Q4631F	AIR REFUELING AMPLIFIER, IFR	AG
171	Q4642O	FUEL INDICATING SYSTEM	AG
172	Q4642D	INDICATOR, FUEL QUANTITY	AG
173	Q4642E	NOT IN WUC MANUAL	AG
174	Q4642J	SIMULATOR, FUEL QUANTITY	AG
175	Q471AA	CONVERTER, LIQUID OXYGEN	AG
176	Q471AB	CONTAINER, LIQUID OXYGEN	AG
177	Q472AO	INDICATOR, OXYGEN QUANTITY	AG
178	Q472DO	REGULATOR, DILUTER DEMAND	AG
179	Q472FO	WIRE HARNESS, CONVERTER PROBE LEAD	AG
180	Q472GO	REGULATOR, DILUTER DEMAND	AG
181	Q511AA	ACCELEROMETER	AG
182	Q511AB	AIR SPEED AND MACH NUMBER	AG
183	Q511AD	VERTICAL VELOCITY	AG
184	Q511AE	TRUE AIR SPEED	AG
185	Q511AJ	ALTIMETER AAU-19 325001	AG
186	Q511AK	ALTIMETER AAU-19 A4132210002	AG
187	Q511AL	ALTIMETER AAU-19 A4132210003	AG
188	Q511CA	TUBE, PITOT STATIC	AG
189	Q512AB	COMPASS, STANDBY	AG
190	Q512CO	FLIGHT DIRECTOR GROUP	AG
191	Q512CA	COMPUTER, FLIGHT DIRECTOR	AG
192	Q512CG	CONTROL, ADJUSTMENT	AG
193	Q512CK	CONTROL MODE SELECTOR	AG
194	Q512CL	INDICATOR, HORIZONTAL SITUAT	AG
195	Q512CM	AMP, HORIZONTAL SITUAT INDIC	AG
196	Q513AO	GENERATOR, AURAL TONE	AG
197	Q513BO	ANGLE-OF-ATTACK TRANSMITTER	AG
198	Q513CO	AURAL STALL WARN CONTROL PANEL	AG
199	Q513EO	INDICATOR, ANGLE-OF-ATTACK	AG
200	Q513FO	INDEXER LIGHT ASSEMBLIES	AG
201	Q513HO	AIR DATA COMPUTER 42400-227-1	AG
202	Q513HB	STATIC PRESSURE COMPENSATOR	AG
203	Q513HC	PRESSURE RATIO TRANDUCER	AG
204	Q513HD	LOGARITHMIC PRESSURE CONTROL	AG
205	Q513HE	MACH SECTOR RESISTOR & CAM MOD	AG
206	Q513HH	COMPUTER AMPLIFIER	AG
207	Q513XO	ALTITUDE ENCODER UNIT	AG
208	Q52110	AILERON-RUDDER INTERCONN	AG
209	Q5211A	ARI AMPLIFIER, AUTO FLIGHT CONTROL	AG
210	Q52240	AIRCRAFT ACCELEROMETER	AG
211	Q52250	AIRCRAFT ACCELEROMETER (LATERAL)	AG
212	Q52270	RATE GYRO (ROLL)	AG
213	Q52280	RATE GYRO (YAW)	AG
214	Q522AO	CONTROLLER, ENGAGING, AUTO PILOT	AG
215	Q522BO	TRANSDUCER, MOTIONAL PICK UP	AG
216	Q522EO	AMPLIFIER, CONTROL	AG
217	Q522EB	AMPLIFIER, SERVO, YAW	AG
218	Q522EC	AMP, SERVO ROLL RIGHT	AG
219	Q522EQ	SYNC DRIVE, PITCH, TWO SPEED	AG
220	Q5511A	RECORDER, (VEL, GRAV, HGT)	AG
221	Q5511C	MAGAZINE, (VEL, GRAV, HGT)	AG
222	Q5515A	INDICATOR, STATISTICAL ACCELER	AG
223	Q5515B	TRANSDUCER, STATIST ACCELER	AG
224	Q552BO	NOT IN WUC MANUAL	AG
225	Q552CO	NOT IN WUC MANUAL	AG

SPARE PARTS (CONTINUED)

PART NO	WUC CODE	PART DESCRIPTION	QUANTITY
226	Q63300	NOT IN WUC MANUAL	AG
227	Q63310	NOT IN WUC MANUAL	AG
228	Q6331C	NOT IN WUC MANUAL	AG
229	Q6331H	NOT IN WUC MANUAL	AG
230	Q6331J	NOT IN WUC MANUAL	AG
231	Q6331N	NOT IN WUC MANUAL	AG
232	Q6335D	NOT IN WUC MANUAL	AG
233	Q6335A	NOT IN WUC MANUAL	AG
234	Q6335C	NOT IN WUC MANUAL	AG
235	Q71310	RECEIVER, R-2032/ARN-127	AG
236	Q71320	CONTROL, C10124/ARN-127	AG
237	Q71350	INDICATOR, ILS (AFT COCKPIT)	AG
238	Q71B10	CONTROL COMPUTER CP723B/ASN	AG
239	Q71BZ0	AMPLIFIER, COMPUTER	AG
240	Q71B2A	AMPLIFIER A803, A804, A806	AG
241	Q71B2C	PREAMPLIFIER A807	AG
242	Q71B2E	RANGE COMPUTER MECH A810	AG
243	Q71B30	INDICATOR, GROUND SPEED	AG
244	Q71H10	CONTROL PANEL C-4779/ASN	AG
245	Q71H20	COMPUTER, NAVIGATIONAL	AG
246	Q71H2A	ELECTRONIC SUBASSEMBLY	AG
247	Q71H3N	DC AMPLIFIER	AG
248	Q71H3U	SUMMING AMPLIFIER	AG
249	Q71H4A	GYRO TEMPERATURE CONTROL	AG
250	Q71H4F	OVEN COMPONENTS & ELEC ASSEMBLY	AG
251	Q71H4L	POWER SUPPLY A25	AG
252	Q71H4R	INTEGRATOR SHAFT A24	AG
254	Q71H50	DISTRIBUTION UNIT, OUTPUT SIGNAL	AG
255	Q71H5A	SERVO, TRUE HEADING A1	AG
256	Q71H60	PLATFORM, GYRO STABILIZED	AG
257	Q71H6B	GYROSCOPE (UPPER)	AG
258	Q71LE0	AMPLIFIER, POWER SUPPLY REC AM-2349	AG
259	Q71LJ0	BEARING DISTANCE HEADING INDICATOR	AG
260	Q71LM0	INDICATOR, BEARING, DISTANCE	AG
261	Q71LQA	ANTENNA, ADF, AS-909/ARA-48	AG
262	Q71LW0	MIKE ADAPTER ASSEMBLY	AG
263	Q71LX0	HEADSET/MICROPHONE CORD, COCKPIT, UPPER	AG
264	Q71MD0	NOT IN WUC MANUAL	AG
265	Q71ME0	NOT IN WUC MANUAL	AG
266	Q71MG0	CONTROL, C-6280/APX TRANS	AG
267	Q71MH0	INTERCOMMUNICATION STATION	AG
268	Q71S00	INTERROGATOR SET AN/APX-76	AG
269	Q71SB0	RECEIVER-TRANSMITTER, RADIO (UNIT 2)	AG
270	Q71SBG	TRANSMITTER ASSEMBLY 2A2	AG
271	Q71SC0	SWITCH AMPLIFIER (UNIT 3)	AG
272	Q71SD0	SYNCHRONIZER SN-416A/APX-76	AG
273	Q71Z00	AN/ARN-118 TACAN SYSTEM	AG
274	Q71ZA0	RECEIVING TRANSMITER RT-1159/A	AG
275	Q71ZB0	ADAPTER MX9577/A OR MX-10070	AG
276	Q71ZC0	MOUNT (REC/TRANS)	AG
277	Q71ZD0	CONTROL UNIT C-10062/A	AG
278	Q71ZE0	MOUNT (DIGITAL TO ANALOG)	AG
279	Q72300	RADAR ALTIMETER, AN/APN-155	AG
280	Q723A0	RECEIVER-TRANSMITTER RT-689	AG
281	Q723AQ	VARIABLE CAPACITY OSCILLATOR	AG
282	Q723B0	INDICATOR, HEIGHT, ID-1090	AG
283	Q723C0	ANTENNA, RECEIVER AS-1386	AG

SPARE PARTS (CONTINUED)

PART NO	WUC CODE	PART DESCRIPTION	QUANTITY
284	Q723DO	ANTENNA, TRANSMITTER AS-1442	AG
285	Q72510	SST-181X TRANSPONDER ASSEMBLY	AG
286	Q73100	ATTITUDE REFER BOMB COMPUTER	AG
287	Q731BO	AMPLIFIER POWER SUPPLY	AG
288	Q731CO	ADAPTER COMPENSATOR COMPASS	AG
289	Q731CA	SYNCRO ASSEMBLY	AG
290	Q731DO	COMPUTER, BOMB RELEASE ANGLE	AG
291	Q731EO	COMPUTER, BOMBING FLIGHT DIRECTOR	AG
292	Q731FO	CONTROLLER COMPASS, C4781/AJB7	AG
293	Q731GO	DISPLACEMENT GYRO	AG
294	Q731HO	INDICATOR, ATTITUDE REFERENCE	AG
295	Q73AKO	GYROSCOPE, RATE SWITCHING MC-1	AG
296	Q731MO	DUAL TIMER MS27264	AG
297	Q731NO	REMOTE ATTITUDE INDICATOR, ARU-13A	AG
298	Q732AO	INDICATOR, STANDBY, VERT REFER	AG
299	Q732CO	PANEL ASSY, STANDBY INVERTER	AG
300	Q73510	CONTROL, COMPUTER CURSOR	AG
301	Q73520	COMPUTER CONTROL C-6480	AG
302	Q73530	BALLISTICS COMPUTER	AG
304	Q7253H	CROSS TRACK RANGE SERVOMECHANISM	AG
303	Q7352B	NOT IN WUC MANUAL	AG
305	Q7353V	DIRECT CURRENT AMPLIFIER	AG
306	Q73540	COMPUTER CONTROL ASSEMBLY	AG
307	Q73560	WEAPON DELIVERY PANEL	AG
308	Q73GOO	DIGITAL MODULAR AVIONICS SYSTEM	AG
309	Q73GAO	NAVIGATION COMPUTER CP-1314/A	AG
310	Q73GBO	LORAN RECEIVER R-1960/A	AG
311	Q73GCO	KEYER CONTROL C-9474	AG
312	Q73GDO	SIGNAL DATA CONVERTER	AG
313	Q73GEO	POWER SUPPLY PP-7428/A	AG
314	Q73GFO	DIGITAL DISPLAY INDICATOR	AG
315	Q73GHO	NAVIGATIONAL COMPUTER SET CONTROL	AG
316	Q73GHA	CIRCUIT CARD ASSEMBLY	AG
317	Q73GNO	INERTIAL MEASURE UNIT BUFF	AG
318	Q73BPO	INERTIAL MEASURE UNIT	AG
319	Q73GQO	NOT IN WUC MANUAL	AG
320	Q74810	GYROSCOPE, LEAD COMPUTING	AG
321	Q74830	NOT IN WUC MANUAL	AG
322	Q74840	OPTICAL DISPLAY UNIT SU-40/ASG-26A	AG
323	Q74910	NOT IN WUC MANUAL	AG
325	Q7492C	NOT IN WUC MANUAL	AG
326	Q74BAO	POWER SUPPLY PP-4848	AG
327	Q74BBO	CONTROL-OSCILLATOR C-7349 (LRU-18)	AG
328	Q74BCO	SYNCHRONIZER, ELECTRONIC (LRU-17)	AG
329	Q74BDO	COMPUTER, TARGET INTERCEPT (LRU-1)	AG
330	Q74BEO	POWER SUPPLY PP-4847	AG
331	Q74BFO	TRANSMITTER, RADAR T-1050 (LRU-5)	AG
332	Q74BGO	MODULATOR-OSCILLATOR MD-735 (LRU-3)	AG
333	Q74BHO	NOT IN WUC MANUAL	AG
334	Q74BJO	CONTROL, ANTENNA C-7348 (LRU-7)	AG
335	Q74BKO	OSCILLATOR, R-F O-1430A (LRU-21)	AG
336	Q74BLO	STABILIZER ASSY MX-7781 (LRU-4)	AG
337	Q74BMO	NOT IN WUC MANUAL	AG
338	Q74BNO	NOT IN WUC MANUAL	AG
339	Q74BPO	WAVE GUIDE ASSEMBLY CG-3365	AG
340	Q74BOO	INDICATOR, INTRA TARGET (LRU-13)	AG
341	Q74BSO	CONTROL, RADAR SET (LRU-9)	AG

SPARE PARTS (CONTINUED)

PART NO	WUC CODE	PART DESCRIPTION	QUANTITY
342	Q74BTO	CONTROL-MONITOR (LRU-8)	AG
343	Q74BUO	INDICATOR, CONTROL C-7347 (LRU-11)	AG
344	Q74BVO	ANTENNA AS-2072A (LRU-16)	AG
345	Q74BWO	RACK, ELECT EQUIP MT-3868 (LRU-14)	AG
346	Q74BXO	CABLE, ASSY CX-10548 (LRU-15)	AG
347	Q74C2O	NOT IN WUC MANUAL	AG
348	Q74CAO	INDICATOR CONTROL UNIT DSCG (LRU-11)	AG
349	Q74CBO	INDICATOR AZ, EL, & RANGE (LRU-12)	AG
350	Q74CCO	INDICATOR AZ, EL, & RANGE (LRU-13)	AG
351	Q74FAO	TG-213/A TUNING DRIVE	AG
352	Q74KAO	NOT IN WUC MANUAL	AG
359	Q7519Q	NOT IN WUC MANUAL	AG
360	Q7531O	MULTIPLE EJECTOR RACK CENTERLINE	AG
361	Q7531C	SENSING SWITCH	AG
362	Q7532O	TRIPLE EJECTION RACK	AG
363	Q7560O	MISSILE FIRING CIRCUITS	AG
364	Q7561A	AUX ARMAMENT CONTROL PANEL	AG
365	Q7561B	L-H SIDEWINDER MISSILE ASSEMBLY	AG
366	Q7561C	R-H SIDEWINDER MISSILE ASSEMBLY	AG
367	Q7561F	MISSILE FIRING RELAY PANEL	AG
368	Q7561L	ARMAMENT RELAY PANEL ASSEMBLY	AG
369	Q7593O	STATION SELECTOR SWITCH	AG
370	Q7591K	WIRE HARNESSS, MULTIPLE WEAPON	AG
371	Q7593O	INTERVALOMETER, P/N	AG
372	Q7595O	WEAPONS RELEASE CONTROL, C8977/A	AG
373	Q75E0O	GUN, PALLETIZED INTERNAL	AG
374	Q75E1A	AMMUNITION DRUM	AG
375	Q75E1C	EXIT UNIT	AG
376	Q75E1D	UNLOADER UNIT	AG
377	Q75E1E	FEEDER UNIT	AG
378	Q75E1F	DRIVE, HYDRAULIC, GUN PALLET	AG
379	Q75E1J	FILTER HYDRAULIC, GUN PALLET	AG
380	Q75E1N	PURGE ASSEMBLY	AG
381	Q75E1X	DRIVE ASSEMBLY -	AG
382	Q75E2O	GUN, INTERNAL 20 MM	AG
383	Q75E2C	CONTACT ASSEMBLY FIRING	AG
384	Q75E2F	BARREL SET,GUN	AG
385	Q75E2G	SOLENOID CLEARING	AG
386	Q765OO	AN/ALE-40 CHAFF/FLARE DISPENSER	AG
387	Q765AO	CHAFF/FLARE PROGRAMMER	AG
388	Q765AA	CHAFF MODULE ASSEMBLY	AG
389	Q765BO	SEQUENCE SWITCH ASSEMBLY	AG
390	Q765BA	DRIVER PCB	AG
391	Q765CO	SLAVE DISPENSER 134025-0001	AG
392	Q765DO	CHAFF PAYLOAD MODULE 133896	AG
393	Q765HO	MASTER DISPENSER 1340001-0001	AG
394	Q765HB	CABLE ASSEMBLY 1333882-0002	AG
395	Q765JO	COCKPIT CONTROL UNIT	AG
396	Q76G99	NOC	AG
397	Q76GAO	SIGNAL PROCESSOR	AG
398	Q76GAB	READ ONLY MEMORY A2	AG
399	Q76GAD	DISPLAY DRIVER	AG
400	Q76GAE	VIDEO PROCESSOR A5	AG
401	Q76GAF	CPU A6	AG
402	Q76GBO	RECEIVER (R1854A)	AG
403	Q76GCO	AMPLIFIER DETECTOR	AG
404	Q76GCA	TRIPLEXER/LIMITER DETECTOR	AG

SPARE PARTS (CONTINUED)

PART NO	WUC CODE	PART DESCRIPTION	QUANTITY
405	Q76GCC	VIDEO AMPLIFIER A2, A4	AG
406	Q76GCD	REGULATOR A7	AG
407	Q76GDO	INDICATOR CONTROL (TDU)	AG
408	Q76GEO	AZIMUTH INDICATOR	AG
409	Q77J1O	EXPOSURE FREQUENCY CONTROL	AG
410	Q77J2A	PERISCOPE, DRS, LD-7OA	AG
411	Q77J2K	KD-42A CAMERA	AG
412	Q77X6O	KB-25A CAMERA	AG
413	Q9321A	CONTAINER, STORAGE SYSTEM	AG
414	Q93217	DOOR 107	AG
576	Q4631C	VALVE, RECEPTACLE SELECTOR	AG
578	Q7511O	AERO 3B LAUNCHER	AG
579	Q7513O	AERO -7A	AG
580	Q7514O	AERO-27A/BRU-5A	AG
581	Q7514A	NOT IN WUC MANUAL	AG
582	Q7514C	BREECH ASSEMBLY	AG
583	Q7514D	PISTON ASSEMBLY	AG
584	Q7515O	LAU-7A/A LAUNCHER	AG
585	Q7515C	MECHANISM ASSEMBLY	AG
586	Q7517O	LAU-34/A TYPES LAUNCHER	AG
587	Q751CO	ARMAMENT PYLONS	AG
588	Q751CA	PYLON, INBOARD ARMAMENT, R-H	AG
589	Q751CB	PYLON, OUTBOARD ARMAMENT, L-H	AG
590	Q751CC	PYLON, OUTBOARD ARMAMENT, R-H	AG
591	Q751CD	PYLON, INBOARD ARMAMENT, L-H	AG
592	Q751DO	MAU-12A BOMB RACK	AG
593	Q751NO	SUU-20/A ROCKET/BOMB DISPENSER	AG
594	Q751ND	BOMB INTERVALOMETER	AG
595	Q751QO	LAU-88 LAUNCHER	AG
596	Q751SO	NOT IN WUC MANUAL	AG
597	Q76BOO	NOT IN WUC MANUAL	AG
598	Q76BAO	NOT IN WUC MANUAL	AG
599	Q76BAA	NOT IN WUC MANUAL	AG
600	Q76BBO	NOT IN WUC MANUAL	AG
601	Q76BCO	NOT IN WUC MANUAL	AG
602	Q76BDO	NOT IN WUC MANUAL	AG
603	Q76BEO	NOT IN WUC MANUAL	AG
604	Q76BFO	NOT IN WUC MANUAL	AG
605	Q76BHO	NOT IN WUC MANUAL	AG
606	Q76BKO	NOT IN WUC MANUAL	AG
607	Q76BLO	NOT IN WUC MANUAL	AG
608	Q76BMO	NOT IN WUC MANUAL	AG
609	Q76BNO	NOT IN WUC MANUAL	AG
610	Q76BPO	NOT IN WUC MANUAL	AG
611	Q76BRO	NOT IN WUC MANUAL	AG
612	Q76BSO	NOT IN WUC MANUAL	AG
613	Q76BUO	NOT IN WUC MANUAL	AG
614	Q76BVO	NOT IN WUC MANUAL	AG
615	Q76BXO	NOT IN WUC MANUAL	AG
616	Q76BYO	NOT IN WUC MANUAL	AG
617	Q76BZO	NOT IN WUC MANUAL	AG
638	Q23000	BASIC J79 TURBO JET ENGINE	AG
639	Q2353R	AMPLIFIER,TEMP CONTROL	AG
640	Q2394A	TRANSMITTER, FUEL FLOW	AG
641	Q2373D	RING, SEAL, MATING	AG
642	Q2396O	ENGINE CONTROLS	AG
643	Q2381A	STARTER, CARTRIDGE/PNEUMATIC	AG

SPARE PARTS (CONTINUED)

PART NO	WUC CODE	PART DESCRIPTION	QUANTITY
644	Q2392A	INDICATOR, EXHAUST TEMPERATURE	AG
645	Q2361L	MAINIFOLD, FUEL INLET	AG
646	Q2361C	ACTUATOR, ROTARY	AG
647	Q2362A	FUEL PUMP, AFTERBURNER	AG
648	Q2397A	VALVE, ANTI-ICING AIR	AG
649	Q2391B	TACHOMETER	AG
659	Q2361D	MAIN FUEL PUMP	AG
660	Q2361B	CONTROL,MAIN FUEL	AG
661			
662	Q2362C	CONTROL,FUEL, AFTERBURNER	AG
663	Q2393B	INDICATOR, OIL PRESSURE	AG
664	Q2395A	INDICATOR, NOZZLE POSITION	AG
665	Q2395B	TRANSMITTER, NOZZLE POSITION	AG
666	Q23312	CASING ASSEMBLY, INNER	AG
667	Q23110	GEARBOX ASSEMBLY, FRONT	AG
668	Q23140	GEARBOX ASSEMBLY, REAR	AG
669	Q23220	STATOR ASSEMBLY	AG
670	Q23230	ROTOR ASSEMBLY	AG
671	Q23420	ROTOR AND SEAL, TURBINE	AG
672	Q23430	FRAME ASSEMBLY, TURBINE	AG
681	Q1325D	MAIN LANDING GEAR TIRE (LEFT)	AG
682	Q1326B	MAIN LANDING GEAR TIRE (RIGHT)	AG

IV.4.2 LIST OF SALVAGEABLE PARTS (CARD TYPE #28)

(FROM AIRCRAFT TOO BADLY DAMAGED TO REPAIR)

PART #	WUC	DESCRIPTION	QUANTITY
1	Q1333C	TIRE, NOSE	1
2	Q111AA	RADOME, NOSE	1
3	Q111BJ	FAIRING, MUZZLE BLAST GROUP I	1
4	Q111BM	FAIR, FORWARD NOSE LAND GEAR DOOR	1
5	Q111BQ	NOT IN WUC MANUAL	1
6	Q111C3	DOOR, HYDRAULIC & PNEUMATIC ACCESS	1
7	Q111CA	NOT IN WUC MANUAL	1
8	Q111CP	DOOR, DATA LINK ACCESS (19)	1
9	Q111DC	DOOR, (26 L/R) GROUP II	1
10	Q111FC	SEAL ASSY, PANEL AFT MISSILE CAVITY	1
11	Q111FG	FAIR ASSY, AFT ENGINE KEEL, REMOV	1
12	Q111FH	FAIR ASSY, AFT MISSILE WELL	1
13	Q111FU	DOOR (39 R)	1
14	Q111FY	FAIR, CENTERLINE STORES RACK ACCES	1
15	Q111G4	DOOR (74 L/R)	1
16	Q111GA	DOOR, STARTER (138)	1
17	Q111GC	DOOR, STARTER EXHAUST (78)	1
18	Q111GQ	DOOR, FUEL & HYDRAU ACCESS (73 L/R)	1
19	Q111GR	DOOR, ENGINE ACCESS (82 L/R)	1
20	Q111GS	DOOR, ENGINE ACCESS (83 L/R)	1
21	Q111GU	DOOR, ENGINE ACCESS (92 L/R)	1
22	Q111HA	DOOR, ENGINE AIR & ACCESS (81 L/R)	1
23	Q111HC	DOOR, ENGINE ACCESS (96 L/R)	1
24	Q111HD	DOOR (37 L/R)	1
25	Q111HE	DOOR (38 L/R)	1
26	Q111HM	DOOR (54 L/R)	1
27	Q111HQ	DOOR (80)	1
28	Q111KD	TAIL CONE	1
29	Q111KE	PANEL, JET BLAST NO 1	1
30	Q111KF	PANEL, JET BLAST NO 2	1
31	Q111KG	PANEL, JET BLAST NO 3	1
32	Q111KH	PANEL, JET BLAST NO 4	1
33	Q111KJ	PANEL, JET BLAST NO 5	1
34	Q111KT	PANEL ASSY, JET BLAST, TAIL CONE	1
35	Q1122B	DOOR (75 L/R)	1
36	Q1122L	DOOR (141 L/R)	1
37	Q1123A	WING TIP ASSEMBLY, FOWARD	1
38	Q1123BL	DOOR, (141 L/R)	1
39	Q1131J	VALVE, SERVO, L/R	1
40	Q1132C	RING ASSY, VARIABLE BELLMOUTH	1
41	Q1132D	ACTUATOR, BYPASS BELLMOUTH	1
42	Q1133B	CYLINDER ASSEMBLY ACTUATOR	1
43	Q1133D	VALVE ASSEMBLY, AUX AIR DOOR SYS	1
44	Q1211R	PANEL PEDESTAL, COCKPIT	1
45	Q1212A	CHARTBOARD AND COMPUTER STOWAGE CS	1
46	Q1212F	FOOT RAMP ASSEMBLY	1
47	Q1212G	FLOORING AND PANELS	1
48	Q12265	CONTAINER, DROGUE (REMOVABLE)	1
49	Q1231B	VALVE, PNEUMATIC SELECTOR (CANOPY)	1
50	Q1231N	CANOPY AIR STORAGE BOTTLE	1
51	Q1233K	CYLINDER, CANOPY PNEUMATIC, FORWAR	1
52	Q1233P	CANOPY VISCOUS DAMPER, FORWARD	1
53	Q1234B	DUMP VALVE, CANOPY EMERGENCY FORWAR	1
54	Q1234C	PNEUMATIC BOTTLE, EMERGENCY FORWARD	1
55	Q1235O	AFT CANOPY ASSEMBLY	1

SALVAGEABLE PARTS (CONTINUED)

PART #	WUC	DESCRIPTION	QUANTITY
56	Q1236K	PNEUMATIC CYLINDER, AFT	1
57	Q1236N	CANOPY VISCOUS DAMPER, AFT	1
58	Q1237B	DUMP VALVE, CANOPY EMERG AFT	1
59	Q1237C	PNEUMATIC BOTTLE AFT	1
60	Q1311C	SWIVELS, LANDING GEAR	1
61	Q1312A	VALVE SELECTOR, P/N 14775-1	1
62	Q1315C	BOTTLE, AIR, EMERGEN LAND GEAR	1
63	Q1321A	SHOCK STRUT, MAIN LANDING GEAR	1
64	Q1321H	CYLINDER, UPLOCK MAIN LAND GEAR	1
65	Q1321M	SIDE BRACE ACTUATOR, MAIN LAND GEAR	1
66	Q1322O	LANDING GEAR (LEFT)	1
67	Q1322A	SHOCK STRUT, LANDING GEAR (LEFT)	1
68	Q1322M	SIDE BRACE ACTUATOR, LAND GEAR LEFT	1
69	Q1323O	MAIN LAND GEAR DOORS (RIGHT)	1
70	Q1323A	CYLINDER, HYDRAUL INBRD DOOR RIGHT	1
71	Q1323D	DOOR ASSY, GEAR STRUT (RIGHT)	1
72	Q1323E	DOOR ASSY, OUTBOARD (RIGHT)	1
73	Q1323F	DOOR ASSY, INBOARD (RIGHT)	1
74	Q1324O	MAIN LAND GEAR DOORS (LEFT)	1
75	Q1332O	NOSE GEAR DOOR AND UPLATCH MECHAN	1
76	Q1332H	DOOR, NOSE LANDING GEAR, FORWARD	1
77	Q1334A	COMPENSATOR, POWER UNIT, NOSE STEER	1
78	Q1334B	POWER UNIT, STEERING	1
79	Q1334J	VALVE, NOSE GEAR STEERING SELECTOR	1
80	Q1341A	VALVE, BRAKE CONTROL	1
81	Q1342B	BRAKE VALVE, MANUAL CONTROL	1
82	Q1342E	ACCUMULATOR, EMERGENCY BRAKE	1
83	Q1343A	VALVE, ANTI-SKID CONTROL	1
84	Q1343B	CONTROL BOX, ANTI-SKID SYSTEM	1
85	Q1343E	ANTI-SKID SENSOR	1
86	Q1344O	BRAKE ASSEMBLY	1
87	Q1344A	PRESSURE PLATE ASSEMBLY	1
88	Q1344H	VALVE, SHUTTLE, BRAKE ASSEMBLY	1
90	Q1344J	HOUSING, BRAKE ASSEMBLY	1
91	Q1344K	BACKING PLATE, BRAKE ASSEMBLY	1
92	Q1351A	ACTUATING CYLINDER, ARRESTING GEAR	1
93	Q1352A	ARRESTING GEAR FAIRING ASSEMBLY	1
94	Q1420O	LATERAL CONTROL SYSTEM	1
95	Q1421O	AILERON ASSEMBLY	1
96	Q1422A	L-H AILERON VISCUOS DAMPER	1
97	Q1422B	AILERON POWER CONTROL CYLINDER	1
98	Q1425B	OUTBOARD SPOILER POWER CYLINDER	1
99	Q1425D	INBOARD SPOILER POWER CYLINDER	1
100	Q1428A	LATERAL SERIES SERVO ACTUATOR	1
101	Q1432F	STABILITOR CONTROL SYSTEM	1
102	Q1436A	AUX POWER UNIT, HYDRAULIC	1
103	Q1436D	MANIFOLD, AUX POWER SYSTEM	1
104	Q1441O	RUDDER	1
105	Q1441A	HORN, RUDDER	1
106	Q1442B	SERVO ACTUATOR, AILERON-RUDDER	1
107	Q1442C	CYLINDER, POWER CONTROL	1
108	Q1442D	HYDRAULIC DAMPER, RUDDER	1
109	Q1442E	ROTARY DAMPER, RUDDER	1
110	Q1442F	CYLINDER, POWER CONTROL P/N	1
111	Q1455E	CYLINDER, TRAILING EDGE FLAP	1
112	Q1455N	AIR SPEED SWITCH, FLAP BLOW-UP	1
113	Q1456A	AIR SELECTOR VALVE, EMERG FLAP	1
114	Q1456B	AIR STORAGE BOTTLE	1

SALVAGEABLE PARTS (CONTINUED)

PART #	WUC	DESCRIPTION	QUANTITY
115	Q1461O	SPEED BRAKE	1
116	Q1461A	SPEED BRAKE UPPER SKIN	1
117	Q1462D	CYLINDER, POWER SPEED BRAKE	1
118	Q1462F	SWIVELS, HYDRAULIC	1
119	Q148DA	VALVE, SLAT POSITION SELECTOR	1
120	Q148DB	CONTROL UNIT ELECTRONIC SLATS	1
121	Q148DH	ACTUATOR, INBOARD SLAT PNEUMATIC	1
122	Q148DJ	ACTUATOR, OUTBOARD SLAT PNEUMATIC	1
123	Q148DQ	SWIVEL ASSEMBLY	1
124	Q4112B	COOLING TURBINE, CABIN REFRIDG	1
125	Q4112N	CABIN MOISTURE SEPARATOR	1
126	Q4112Q	CABIN ANTI-ICING CONTROL	1
127	Q4114F	EQUIPMENT HEAT EXCHANGER	1
128	Q4114G	EQUIPMENT COOLING TURBINE	1
129	Q4114H	EJECTOR VALVE, GROUND COOL	1
130	Q4114J	VALVE, TURBINE BY-PASS	1
131	Q4115A	AIR FILTER, IN-LINE CADC	1
132	Q4121F	REGULATOR, CABIN PRESSURE	1
133	Q4211O	MISC RELAY PANEL NO 1	1
134	Q4211B	WHEEL WELL SWITCH PANEL	1
135	Q4212O	MISC RELAY PANEL NO. 2	1
136	Q4213O	MISC RELAY PANEL NO. 3	1
137	Q4214O	MISC RELAY PANEL NO. 4	1
138	Q4215O	MISC RELAY PANEL NO. 5	1
139	Q42152	MISC RELAY PANEL NO. 6	1
140	Q4216O	CIRCUIT BREAKER PANEL NO. 1	1
141	Q421DO	NOT IN WUC MANUAL	1
142	Q4223O	FREQ & LOAD CONTROL BOX 693134	1
143	Q4224O	FREQ & LOAD CONTROL BOX 538D888	1
144	Q4233O	BATTERY, NICKEL CADMIUM	1
145	Q4261O	GENERATOR, 30 KVA, 400 CYCLE 3	1
146	Q4264O	SUPERVISORY PANEL 21B30-5A	1
147	Q4265O	SUPERVISORY PANEL, 21B30-3CX	1
148	Q4411B	PANEL ASSEMBLY, INTERIOR COCKPIT	1
149	Q4411G	MASTER CAUTION LIGHT	1
150	Q4411K	CONTROL PANEL CAUTION LIGHT	1
151	Q4411M	LIGHTS, COCKPIT, FLOOD	1
152	Q4412A	PANEL, COCKPIT INTER. LIGHT	1
153	Q4422O	FUSELAGE LIGHTS	1
154	Q4423C	WING TIP TAPE LIGHTS	1
155	Q4511A	RESERVOIR, HYDRAULIC NO. 1	1
156	Q4511B	PUMP, HYDRAULIC (TCI) NO.1	1
157	Q4511M	INDICATOR, HYDRAULIC PRESSURE	1
158	Q4512A	RESERVOIR, HYDRAULIC NO.2	1
159	Q4512B	PUMP, HYDRAULIC NO. 2	1
160	Q4513A	RESERVOIR, UTILITY HYDRAULIC	1
161	Q4513C	PUMP, HYDRAULIC (TCI) GROUP I	1
162	Q4513L	HYDRAULIC FLOW REGULATOR	1
163	Q4513N	PRESSURE INDICATOR, HYDRAULIC	1
164	Q4513P	PRESSURE TRANSMITTER HYDRAULIC	1
165	Q4521A	COMPRESSOR, HYDRAULIC DRIVEN	1
166	Q4521C	SEPARATOR, MOISTURE, PNUEMATIC	1
167	Q4521H	PUMP, OIL, AIR COMPRESSURE	1
168	Q4624A	PYLON ASSEMBLY	1
169	Q4631D	AIR REFUEL ACTUAT RECEPTACLE	1
170	Q4631F	AIR REFUELING AMPLIFIER, IFR	1
171	Q4642O	FUEL INDICATING SYSTEM	1
172	Q4642D	INDICATOR, FUEL QUANTITY	1

SALVAGEABLE PARTS (CONTINUED)

PART #	WUC	DESCRIPTION	QUANTITY
173	Q4642E	NOT IN WUC MANUAL	1
174	Q4642J	SIMULATOR, FUEL QUANTITY	1
175	Q471AA	CONVERTER, LIQUID OXYGEN	1
176	Q471AB	CONTAINER, LIQUID OXYGEN	1
177	Q472AO	INDICATOR, OXYGEN QUANTITY	1
178	Q472DO	REGULATOR, DILUTER DEMAND	1
179	Q472FO	WIRE HARNESS, CONVERTER PROBE LEAD	1
180	Q472GC	REGULATOR, DILUTER DEMAND	1
181	Q511AA	ACCELEROMETER	1
182	Q511AB	AIR SPEED AND MACH NUMBER	1
183	Q511AD	VERTICAL VELOCITY	1
184	Q511AE	TRUE AIR SPEED	1
185	Q511AJ	ALTIMETER AAU-19 325001	1
186	Q511AK	ALTIMETER AAU-19 A4132210002	1
187	Q511AL	ALTIMETER AAU-19 A4132210003	1
188	Q511CA	TUBE, PITOT STATIC	1
189	Q512AB	COMPASS, STANDBY	1
190	Q512CO	FLIGHT DIRECTOR GROUP	1
191	Q512CA	COMPUTER, FLIGHT DIRECTOR	1
192	Q512CG	CONTROL, ADJUSTMENT	1
193	Q512CK	CONTROL MODE SELECTOR	1
194	Q512CL	INDICATOR, HORIZONTAL SITUAT	1
195	Q512CM	AMP, HORIZONTAL SITUAT INDIC	1
196	Q513AO	GENERATOR, AURAL TONE	1
197	Q513BO	ANGLE-OF-ATTACK TRANSMITTER	1
198	Q513CO	AURAL STALL WARN CONTROL PANEL	1
199	Q513EO	INDICATOR, ANGLE-OF-ATTACK	1
200	Q513FO	INDEXER LIGHT ASSEMBLIES	1
201	Q513HO	AIR DATA COMPUTER 42400-227-1	1
202	Q513HB	STATIC PRESSURE COMPENSATOR	1
203	Q513HC	PRESSURE RATIO TRANDUCER	1
204	Q513HD	LOGARITHMIC PRESSURE CONTROL	1
205	Q513HE	MACH SECTOR RESISTOR & CAM MOD	1
206	Q513HH	COMPUTER AMPLIFIER	1
207	Q513XO	ALTITUDE ENCODER UNIT	1
208	Q52110	AILERON-RUDDER INTERCONN	1
209	Q5211A	ARI AMPLIFIER, AUTO FLIGHT CONTROL	1
210	Q52240	AIRCRAFT ACCELEROMETER	1
211	Q52250	AIRCRAFT ACCELEROMETER (LATERAL)	1
212	Q52270	RATE GYRO (ROLL)	1
213	Q52280	RATE GYRO (YAW)	1
214	Q522AO	CONTROLLER, ENGAGING, AUTO PILOT	1
215	Q522BO	TRANSDUCER, MOTIONAL PICK UP	1
216	Q522EO	AMPLIFIER, CONTROL	1
217	Q522EB	AMPLIFIER, SERVO, YAW	1
218	Q522EC	AMP, SERVO ROLL RIGHT	1
219	Q522EQ	SYNC DRIVE, PITCH, TWO SPEED	1
220	Q5511A	RECORDER, (VEL, GRAV, HGT)	1
221	Q5511C	MAGAZINE, (VEL, GRAV, HGT)	1
222	Q5515A	INDICATOR, STATISTICAL ACCELER	1
223	Q5515B	TRANSDUCER, STATIST ACCELER	1
224	Q552BO	NOT IN WUC MANUAL	1
225	Q552CO	NOT IN WUC MANUAL	1
226	Q63300	NOT IN WUC MANUAL	1
227	Q63310	NOT IN WUC MANUAL	1
228	Q6331C	NOT IN WUC MANUAL	1
229	Q6331H	NOT IN WUC MANUAL	1
230	Q6331J	NOT IN WUC MANUAL	1

SALVAGEABLE PARTS (CONTINUED)

PART #	WUC	DESCRIPTION	QUANTITY
231	Q6331N	NOT IN WUC MANUAL	1
232	Q6335D	NOT IN WUC MANUAL	1
233	Q6335A	NOT IN WUC MANUAL	1
234	Q6335C	NOT IN WUC MANUAL	1
235	Q71310	RECEIVER, R-2032/ARN-127	1
236	Q71320	CONTROL, C10124/ARN-127	1
237	Q71350	INDICATOR, ILS (AFT COCKPIT)	1
238	Q71B10	CONTROL COMPUTER CP723B/ASN	1
239	Q71BZ0	AMPLIFIER, COMPUTER	1
240	Q71B2A	AMPLIFIER A803, A804, A806	1
241	Q71B2C	PREAMPLIFIER A807	1
242	Q71B2E	RANGE COMPUTER MECH A810	1
243	Q71B30	INDICATOR, GROUND SPEED	1
244	Q71H10	CONTROL PANEL C-4779/ASN	1
245	Q71H20	COMPUTER, NAVIGATIONAL	1
246	Q71H2A	ELECTRONIC SUBASSEMBLY	1
247	Q71H3N	DC AMPLIFIER	1
248	Q71H3U	SUMMING AMPLIFIER	1
249	Q71H4A	GYRO TEMPERATURE CONTROL	1
250	Q71H4F	OVEN COMPONENTS & ELEC ASSEMBLY	1
251	Q71H4L	POWER SUPPLY A25	1
252	Q71H4R	INTEGRATOR SHAFT A24	1
254	Q71H50	DISTRIBUTION UNIT, OUTPUT SIGNAL	1
255	Q71H5A	SERVO, TRUE HEADING A1	1
256	Q71H60	PLATFORM, GYRO STABILIZED	1
257	Q71H6B	GYROSCOPE (UPPER)	1
258	Q71LE0	AMPLIFIER, POWER SUPPLY REC AM-2349	1
259	Q71LJ0	BEARING DISTANCE HEADING INDICATOR	1
260	Q71LM0	INDICATOR, BEARING, DISTANCE	1
261	Q71LQA	ANTENNA, ADF, AS-909/ARA-48	1
262	Q71LW0	M1KE ADAPTER ASSEMBLY	1
263	Q71LX0	HEADSET/MICROPHONE CORD COCKPIT,	1
264	Q71MD0	NOT IN WUC MANUAL	1
265	Q71ME0	NOT IN WUC MANUAL	1
266	Q71MG0	CONTROL, C-6280/APX TRANS	1
267	Q71MH0	INTERCOMMUNICATION STATION	1
268	Q71S00	INTERROGATOR SET AN/APX-76	1
269	Q71SB0	RECEIVER-TRANSMITTER, RADIO (UNIT 2)	1
270	Q71SBG	TRANSMITTER ASSEMBLY 2A2	1
271	Q71SC0	SWITCH AMPLIFIER (UNIT 3)	1
272	Q71SD0	SYNCHRONIZER SN-416A/APX-76	1
273	Q71Z00	AN/ARN-118 TACAN SYSTEM	1
274	Q71ZA0	RECEIVING TRANSMITER RT-1159/A	1
275	Q71ZB0	ADAPTER MX9577/A OR MX-10070	1
276	Q71ZC0	MOUNT (REC/TRANS)	1
277	Q71ZD0	CONTROL UNIT C-10062/A	1
278	Q71ZE0	MOUNT (DIGITAL TO ANALOG)	1
279	Q72300	RADAR ALTIMETER, AN/APN-155	1
280	Q723A0	RECEIVER-TRANSMITTER RT-689	1
281	Q723AQ	VARIABLE CAPACITY OSCILLATOR	1
282	Q723B0	INDICATOR, HEIGHT, ID-1090	1
283	Q723C0	ANTENNA, RECEIVER AS-1386	1
284	Q723D0	ANTENNA, TRANSMITTER AS-1442	1
285	Q72510	SST-181X TRANSPONDER ASSEMBLY	1
286	Q73100	ATTITUDE REFER BOMB COMPUTER	1
287	Q731B0	AMPLIFIER POWER SUPPLY	1
288	Q731C0	ADAPTER COMPENSATOR COMPASS	1
289	Q731CA	SYNCRO ASSEMBLY	1

SALVAGEABLE PARTS (CONTINUED)

PART #	WUC	DESCRIPTION	QUANTITY
290	Q731DO	COMPUTER, BOMB RELEASE ANGLE	1
291	Q731EO	COMPUTER, BOMBING FLIGHT DIRECTOR	1
292	Q731FO	CONTROLLER COMPASS, C4781/AUB7	1
293	Q731GO	DISPLACEMENT GYRO	1
294	Q731HO	INDICATOR, ATTITUDE REFERENCE	1
295	Q73AKO	GYROSCOPE, RATE SWITCHING MC-1	1
296	Q731MO	DUAL TIMER MS27264	1
297	Q731NO	REMOTE ATTITUDE INDICATOR, ARU-13A	1
298	Q732AO	INDICATOR, STANDBY, VERT REFER	1
299	Q732CO	PANEL ASSY, STANDBY INVERTER	1
300	Q73510	CONTROL, COMPUTER CURSOR	1
301	Q73520	COMPUTER CONTROL C-6480	1
302	Q73530	BALLISTICS COMPUTER	1
303	Q7352B	NOT IN WUC MANUAL	1
304	Q7253H	CROSS TRACK RANGE SERVOMECHANISM	1
305	Q7353V	DIRECT CURRENT AMPLIFIER	1
306	Q73540	COMPUTER CONTROL ASSEMBLY	1
307	Q73560	WEAPON DELIVERY PANEL	1
308	Q73G00	DIGITAL MODULAR AVIONICS SYSTEM	1
309	Q73GAO	NAVIGATION COMPUTER CP-1314/A	1
310	Q73GBO	LORAN RECEIVER R-1960/A	1
311	Q73GCO	KEYER CONTROL C-9474	1
312	Q73GDO	SIGNAL DATA CONVERTER	1
313	Q73GEO	POWER SUPPLY PP-7428/A	1
314	Q73GFO	DIGITAL DISPLAY INDICATOR	1
315	Q73GHO	NAVIGATIONAL COMPUTER SET CONTROL	1
316	Q73GHA	CIRCUIT CARD ASSEMBLY	1
317	Q73GNO	INERTIAL MEASURE UNIT BUFF	1
318	Q73BPO	INERTIAL MEASURE UNIT	1
319	Q73GQO	NOT IN WUC MANUAL	1
320	Q74B10	GYROSCOPE, LEAD COMPUTING	1
321	Q74830	NOT IN WUC MANUAL	1
322	Q74840	OPTICAL DISPLAY UNIT SU-40/ASG-26A	1
323	Q74910	NOT IN WUC MANUAL	1
325	Q7492C	NOT IN WUC MANUAL	1
326	Q74BAO	POWER SUPPLY PP-4848	1
327	Q74BBO	CONTROL-OSCILLATOR C-7349 (LRU-18)	1
328	Q74BCO	SYNCHRONIZER, ELECTRONIC (LRU-17)	1
329	Q74BDO	COMPUTER, TARGET INTERCEPT (LRU-1)	1
330	Q74BEO	POWER SUPPLY PP-4847	1
331	Q74BFO	TRANSMITTER, RADAR T-1050 (LRU-5)	1
332	Q74BGO	MODULATOR-OSCILLATOR MD-735 (LRU-3)	1
333	Q74BHO	NOT IN WUC MANUAL	1
334	Q74BJO	CONTROL, ANTENNA C-7348 (LRU-7)	1
335	Q74BKO	OSCILLATOR, R-F O-1430A (LRU-21)	1
336	Q74BLO	STABILIZER ASSY MX-7781 (LRU-4)	1
337	Q74BMO	NOT IN WUC MANUAL	1
338	Q74BNO	NOT IN WUC MANUAL	1
339	Q74BPO	WAVE GUIDE ASSEMBLY CG-3365	1
340	Q74BQO	INDICATOR, INTRA TARGET (LRU-13)	1
341	Q74BSO	CONTROL, RADAR SET (LRU-9)	1
342	Q74BTO	CONTROL-MONITOR (LRU-8)	1
343	Q74BUO	INDICATOR, CONTROL C-7347 (LRU-11)	1
344	Q74BVO	ANTENNA AS-2072A (LRU-16)	1
345	Q74BWO	RACK, ELECT EQUIP MT-3868 (LRU-14)	1
346	Q74BXO	CABLE, ASSY CX-10548 (LRU-15)	1
347	Q74C2O	NOT IN WUC MANUAL	1
348	Q74CAO	INDICATOR CONTROL UNIT DSCG (LRU-11)	1

SALVAGEABLE PARTS (CONTINUED)

PART #	WUC	DESCRIPTION	QUANTITY
349	Q74CB0	INDICATOR AZ, EL, & RANGE (LRU-12)	1
350	Q74CC0	INDICATOR AZ, EL, & RANGE (LRU-13)	1
351	Q74FA0	TG-213/A TUNING DRIVE	1
352	Q74KA0	NOT IN WUC MANUAL	1
359	Q7519Q	NOT IN WUC MANUAL	1
360	Q75310	MULTIPLE EJECTOR RACK CENTERLINE	1
361	Q7531C	SENSING SWITCH	1
362	Q75320	TRIPLE EJECTION RACK	1
363	Q75600	MISSILE FIRING CIRCUITS	1
364	Q7561A	AUX ARMAMENT CONTROL PANEL	1
365	Q7561B	L-H SIDEWINDER MISSILE ASSEMBLY	1
366	Q7561C	R-H SIDEWINDER MISSILE ASSEMBLY	1
367	Q7561F	MISSILE FIRING RELAY PANEL	1
368	Q7561L	ARMAMENT RELAY PANEL ASSEMBLY	1
369	Q75930	STATION SELECTOR SWITCH	1
370	Q7591K	WIRE HARNESSS, MULTIPLE WEAPON	1
371	Q75930	INTERVALOMETER, P/N	1
372	Q75950	WEAPONS RELEASE CONTROL, C8977/A	1
373	Q75E00	GUN, PALLETIZED INTERNAL	1
374	Q75E1A	AMMUNITION DRUM	1
375	Q75E1C	EXIT UNIT	1
376	Q75E1D	UNLOADER UNIT	1
377	Q75E1E	FEEDER UNIT	1
378	Q75E1F	DRIVE, HYDRAULIC, GUN PALLET	1
379	Q75E1J	FILTER HYDRAULIC, GUN PALLET	1
380	Q75E1N	PURGE ASSEMBLY	1
381	Q75E1X	DRIVE ASSEMBLY	1
382	Q75E20	GUN, INTERNAL 20 MM	1
383	Q75E2C	CONTACT ASSEMBLY FIRING	1
384	Q75E2F	BARREL SET,GUN	1
385	Q75E2G	SOLENOID CLEARING	1
386	Q76500	AN/ALE-40 CHAFF/FLARE DISPENSER	1
387	Q765A0	CHAFF/FLARE PROGRAMMER	1
388	Q765AA	CHAFF MODULE ASSEMBLY	1
389	Q765B0	SEQUENCE SWITCH ASSEMBLY	1
390	Q765BA	DRIVER PCB	1
391	Q765C0	SLAVE DISPENSER 134025-0001	1
392	Q765D0	CHAFF PAYLOAD MODULE 133896	1
393	Q765H0	MASTER DISPENSER 1340001-0001	1
394	Q765HB	CABLE ASSEMBLY 1333882-0002	1
395	Q765J0	COCKPIT CONTROL UNIT	1
396	Q76G99	NOC	1
397	Q76GA0	SIGNAL PROCESSOR	1
398	Q76GAB	READ ONLY MEMORY A2	1
399	Q76GAD	DISPLAY DRIVER	1
400	Q76GAE	VIDEO PROCESSOR A5	1
401	Q76GAF	CPU A6	1
402	Q76GB0	RECEIVER (R1854A)	1
403	Q76GC0	AMPLIFIER DETECTOR	1
404	Q76GCA	TRIPLEXER/LIMITER DETECTOR	1
405	Q76GCC	VIDEO AMPLIFIER A2, A4	1
406	Q76GCD	REGULATOR A7	1
407	Q76GD0	INDICATOR CONTROL (TDU)	1
408	Q76GE0	AZIMUTH INDICATOR	1
409	Q77J10	EXPOSURE FREQUENCY CONTROL	1
410	Q77J2A	PERISCOPE, DRS, LD-70A	1
411	Q77J2K	KD-42A CAMERA	1
412	Q77X60	KB-25A CAMERA	1

SALVAGEABLE PARTS (CONTINUED)

PART #	WUC	DESCRIPTION	QUANTITY
413	Q9321A	CONTAINER, STORAGE SYSTEM	1
414	Q93217	DOOR 107	1
638	Q23000	BASIC J79 TURBO JET ENGINE	2
639	Q2353R	AMPLIFIER,TEMP CONTROL	1
640	Q2394A	TRANSMITTER, FUEL FLOW	1
641	Q2373D	RING, SEAL, MATING	1
642	Q23960	ENGINE CONTROLS	1
643	Q2381A	STARTER, CARTRIDGE/PNEUMATIC	1
644	Q2392A	INDICATOR, EXHAUST TEMPERATURE	1
645	Q2361L	MAINIFOLD, FUEL INLET	1
646	Q2361C	ACTUATOR, ROTARY	1
647	Q2362A	FUEL PUMP, AFTERBURNER	1
648	Q2397A	VALVE, ANTI-ICING AIR	1
649	Q2391B	TACHOMETER	1
659	Q2361D	MAIN FUEL PUMP	1
660	Q2361B	CONTROL,MAIN FUEL	1
661	Q2362V	HOSE, AFTERBURNER FUEL PUMP	1
662	Q2362C	CONTROL,FUEL, AFTERBURNER	1
663	Q2393B	INDICATOR, OIL PRESSURE	1
664	Q2395A	INDICATOR, NOZZLE POSITION	1
665	Q2395B	TRANSMITTER, NOZZLE POSITION	1
666	Q23312	CASING ASSEMBLY, INNER	1
667	Q23110	GEARBOX ASSEMBLY, FRONT	1
668	Q23140	GEARBOX ASSEMBLY, REAR	1
669	Q23220	STATOR ASSEMBLY	1
670	Q23230	ROTOR ASSEMBLY	1
671	Q23420	ROTOR AND SEAL, TURBINE	1
672	Q23430	FRAME ASSEMBLY, TURBINE	1
681	Q1325D	MAIN LANDING GEAR TIRE (LEFT)	1
682	Q1326B	MAIN LANDING GEAR TIRE (RIGHT)	1

IV.4.3 CANNIBALIZATION DATA (CARD TYPES #35/1, #35/2)

THE NOMINAL TASK TIME FOR CANNIBALIZATION OF A PART IS 150 % (CANMUL ON CT 3/1) OF THE NOMINAL TIME FOR THE TASK SEGMENT THAT SPECIFIES THAT PART.

*** INDICATES THAT THE PART CANNOT BE CANNIBALIZED

PART NUMBER	WUC	PART DESCRIPTION	ADDITIONAL CANNIBALIZATION TIME (MIN)	PROB OF BROKEN PART
1	Q1333C	TIRE, NOSE	0	0
2	Q111AA	RADOME, NOSE	0	0
3	Q111BJ	FAIRING, MUZZLE BLAST GROUP I	0	0
4	Q111BM	FAIR, FORWARD NOSE LAND GEAR DOOR	0	0
5	Q111BQ	NOT IN WUC MANUAL	0	0
6	Q111C3	DOOR, HYDRAULIC & PNEUMATIC ACCESS	0	0
7	Q111CA	NOT IN WUC MANUAL	0	0
8	Q111CP	DOOR, DATA LINK ACCESS (19)	0	0
9	Q111DC	DOOR, (26 L/R) GROUP II	0	0
10	Q111FC	SEAL ASSY, PANEL AFT MISSILE CAV	0	0
11	Q111FG	FAIR ASSY, AFT ENGINE KEEL, REMOV	0	0
12	Q111FH	FAIR ASSY, AFT MISSILE WELL	0	0
13	Q111FU	DOOR (39 R)	0	0
14	Q111FY	FAIR, CENTERLINE STORES RACK ACC	0	0
15	Q111G4	DOOR (74 L/R)	0	0
16	Q111GA	DOOR, STARTER (138)	0	0
17	Q111GC	DOOR, STARTER EXHAUST (78)	0	0
18	Q111GQ	DOOR, FUEL & HYDR ACC (73 L/R)	0	0
19	Q111GR	DOOR, ENGINE ACCESS (82 L/R)	0	0
20	Q111GS	DOOR, ENGINE ACCESS (83 L/R)	0	0
21	Q111GU	DOOR, ENGINE ACCESS (92 L/R)	0	0
22	Q111HA	DOOR, ENGINE AIR & ACC (81 L/R)	0	0
23	Q111HC	DOOR, ENGINE ACCESS (96 L/R)	0	0
24	Q111HD	DOOR (37 L/R)	0	0
25	Q111HE	DOOR (38 L/R)	0	0
26	Q111HM	DOOR (54 L/R)	0	0
27	Q111HQ	DOOR (80)	0	0
28	Q111KD	TAIL CONE	0	0
29	Q111KE	PANEL, JET BLAST NO. 1	0	0
30	Q111KF	PANEL, JET BLAST NO. 2	0	0
31	Q111KG	PANEL, JET BLAST NO. 3	84	0
32	Q111KH	PANEL, JET BLAST NO. 4	0	0
33	Q111KJ	PANEL, JET BLAST NO. 5	0	0
34	Q111KT	PANEL ASSY, JET BLAST, TAIL CONE	0	0
35	Q1122B	DOOR (75 L/R)	0	0
36	Q1122L	DOOR (141 L/R)	0	0
37	Q1123A	WING TIP ASSEMBLY, FOWARD	0	0
38	Q1128L	DOOR, (141 L/R)	0	0
39	Q1131J	VALVE, SERVO, L/R	210	0
40	Q1132C	RING ASSY, VARIABLE BELLMOUTH	0	0
41	Q1132D	ACTUATOR, BYPASS BELLMOUTH	0	0
42	Q1133B	CYLINDER ASSEMBLY ACTUATOR	0	0
43	Q1133D	VALVE ASSEMBLY, AUX AIR DOOR SYS	0	0
44	Q1211R	PANEL PEDESTAL, COCKPIT	0	0
45	Q1212A	CHARTBOARD AND COMPUTER STOWAGE CS	0	0
46	Q1212F	FOOT RAMP ASSEMBLY	0	0
47	Q1212G	FLOORING AND PANELS	0	0

CANNIBALIZATION DATA (CONTINUED)

PART NUMBER	WUC	PART DESCRIPTION	ADDITIONAL CANNIBALIZATION TIME (MIN)	PROB OF BROKEN PART
48	Q12265	CONTAINER, DROGUE (REMOVABLE)	162	0
49	Q1231B	VALVE, PNEUMATIC SELECTOR (CANOPY)	0	0
50	Q1231N	CANOPY AIR STORAGE BOTTLE	0	0
51	Q1233K	CYLINDER, CANOPY PNEUMATIC, FORWAR	156	0
52	Q1233P	CANOPY VISCOUS DAMPER, FORWARD	0	0
53	Q1234B	DUMP VALVE, CANOPY EMERGENCY FORWAR	0	0
54	Q1234C	PNEUMATIC BOTTLE, EMERGENCY FORWARD	0	0
55	Q1235O	AFT CANOPY ASSEMBLY	0	0
56	Q1236K	PNEUMATIC CYLINDER, AFT	0	0
57	Q1236N	CANOPY VISCOUS DAMPER, AFT	0	0
58	Q1237B	DUMP VALVE, CANOPY EMERG AFT	0	0
59	Q1237C	PNEUMATIC BOTTLE AFT	0	0
60	Q1311C	SWIVELS, LANDING GEAR	0	0
61	Q1312A	VALVE SELECTOR, P/N 14775-1	0	0
62	Q1315C	BOTTLE, AIR, EMERGEN LAND GEAR	0	0
63	Q1321A	SHOCK STRUT, MAIN LANDING GEAR	0	0
64	Q1321H	CYLINDER, UPLOCK MAIN LAND GEAR	0	0
65	Q1321M	SIDE BRACE ACTUATOR, MAIN LAND GEAR	0	0
66	Q1322O	LANDING GEAR (LEFT)	0	0
67	Q1322A	SHOCK STRUT, LANDING GEAR (LEFT)	0	0
68	Q1322M	SIDE BRACE ACTUATOR, LAND GEAR LEFT	0	0
69	Q1323O	MAIN LAND GEAR DOORS (RIGHT)	0	0
70	Q1323A	CYLINDER, HYDRAUL INBRD DOOR RIGHT	0	0
71	Q1323D	DOOR ASSY, GEAR STRUT (RIGHT)	156	0
72	Q1323E	DOOR ASSY, OUTBOARD (RIGHT)	0	0
73	Q1323F	DOOR ASSY, INBOARD (RIGHT)	0	0
74	Q1324O	MAIN LAND GEAR DOORS (LEFT)	60	0
75	Q1332O	NOSE GEAR DOOR AND UPLATCH MECHAN	0	0
76	Q1332H	DOOR, NOSE LANDING GEAR, FORWARD	0	0
77	Q1334A	COMPENSATOR, POWER UNIT, NOSE STEER	0	0
78	Q1334B	POWER UNIT, STEERING	0	0
79	Q1334J	VALVE, NOSE GEAR STEERING SELECTOR	0	0
80	Q1341A	VALVE, BRAKE CONTROL	360	0
81	Q1342B	BRAKE VALVE, MANUAL CONTROL	0	0
82	Q1342E	ACCUMULATOR, EMERGENCY BRAKE	0	0
83	Q1343A	VALVE, ANTI-SKID CONTROL	0	0
84	Q1343B	CONTROL BOX, ANTI-SKID SYSTEM	83	0
85	Q1343E	ANTI-SKID SENSOR	0	0
86	Q1344O	BRAKE ASSEMBLY	0	0
87	Q1344A	PRESSURE PLATE ASSEMBLY	0	0
88	Q1344H	VALVE, SHUTTLE, BRAKE ASSEMBLY	0	0
90	Q1344J	HOUSING, BRAKE ASSEMBLY	0	0
91	Q1344K	BACKING PLATE, BRAKE ASSEMBLY	0	0
92	Q1351A	ACTUATING CYLINDER, ARRESTING GEAR	0	0
93	Q1352A	ARRESTING GEAR FAIRING ASSEMBLY	0	0
94	Q14200	LATERAL CONTROL SYSTEM	540	0
95	Q14210	AILERON ASSEMBLY	0	0
96	Q1422A	L-H AILERON VISCUOS DAMPER	0	0
97	Q1422B	AILERON POWER CONTROL CYLINDER	0	0
98	Q1425B	OUTBOARD SPOILER POWER CYLINDER	0	0
99	Q1425D	INBOARD SPOILER POWER CYLINDER	0	0
100	Q1428A	LATERAL SERIES SERVO ACTUATOR	0	0
101	Q1432F	STABILITOR CONTROL SYSTEM	120	0
102	Q1436A	AUX POWER UNIT, HYDRAULIC	0	0
103	Q1436D	MANIFOLD, AUX POWER SYSTEM	0	0
104	Q14410	RUDDER	0	0

CANNIBALIZATION DATA (CONTINUED)

PART NUMBER	WUC	PART DESCRIPTION	ADDITIONAL CANNIBALIZATION TIME (MIN)	PROB OF BROKEN PART
105	Q1441A	HORN, RUDDER	0	0
106	Q1442B	SERVO ACTUATOR, AILERON-RUDDER	240	0
107	Q1442C	CYLINDER, POWER CONTROL	0	0
108	Q1442D	HYDRAULIC DAMPER, RUDDER	0	0
109	Q1442E	ROTARY DAMPER, RUDDER	420	0
110	Q1442F	CYLINDER, POWER CONTROL P/N	0	0
111	Q1455E	CYLINDER, TRAILING EDGE FLAP	0	0
112	Q1455N	AIR SPEED SWITCH, FLAP BLOW-UP	0	0
113	Q1456A	AIR SELECTOR VALVE, EMERG FLAP	0	0
114	Q1456B	AIR STORAGE BOTTLE	0	0
115	Q1461O	SPEED BRAKE	0	0
116	Q1461A	SPEED BRAKE UPPER SKIN	0	0
117	Q1462D	CYLINDER, POWER SPEED BRAKE	0	0
118	Q1462F	SWIVELS, HYDRAULIC	0	0
119	Q148DA	VALVE, SLAT POSITION SELECTOR	0	0
120	Q148DB	CONTROL UNIT ELECTRONIC SLATS	0	0
121	Q148DH	ACTUATOR, INBOARD SLAT PNEUMATIC	0	0
122	Q148DJ	ACTUATOR, OUTBOARD SLAT PNEUMATIC	0	0
123	Q148DQ	SWIVEL ASSEMBLY	0	0
124	Q4112B	COOLING TURBINE, CABIN REFRIDG	150	0
125	Q4112N	CABIN MOISTURE SEPARATOR	0	0
126	Q4112O	CABIN ANTI-ICING CONTROL	0	0
127	Q4114F	EQUIPMENT HEAT EXCHANGER	0	0
128	Q4114G	EQUIPMENT COOLING TURBINE	0	0
129	Q4114H	EJECTOR VALVE, GROUND COOL	0	0
130	Q4114J	VALVE, TURBINE BY-PASS	0	0
131	Q4115A	AIR FILTER, IN-LINE CADC	0	0
132	Q4121F	REGULATOR, CABIN PRESSURE	0	0
133	Q4211O	MISC RELAY PANEL NO 1	0	0
134	Q4211B	WHEEL WELL SWITCH PANEL	0	0
135	Q4212O	MISC RELAY PANEL NO. 2	0	0
136	Q4213O	MISC RELAY PANEL NO. 3	0	0
137	Q4214O	MISC RELAY PANEL NO. 4	0	0
138	Q4215O	MISC RELAY PANEL NO. 5	0	0
139	Q42152	MISC RELAY PANEL NO. 6	0	0
140	Q4216O	CIRCUIT BREAKER PANEL NO. 1	0	0
141	Q421DO	NOT IN WUC MANUAL	0	0
142	Q4223O	FREQ & LOAD CONTROL BOX 693134	60	0
143	Q4224O	FREQ & LOAD CONTROL BOX 538D888	60	0
144	Q4233O	BATTERY, NICKEL CADMIUM	0	0
145	Q4261O	GENERATOR, 30 KVA, 400 CYCLE 3	114	0
146	Q4264O	SUPERVISORY PANEL 21B30-5A	69	0
147	Q4265O	SUPERVISORY PANEL, 21B30-3CX	60	0
148	Q4411B	PANEL ASSEMBLY, INTERIOR COCKPIT	0	0
149	Q4411G	MASTER CAUTION LIGHT	0	0
150	Q4411K	CONTROL PANEL CAUTION LIGHT	0	0
151	Q4411M	LIGHTS, COCKPIT, FLOOD	0	0
152	Q4412A	PANEL, COCKPIT INTER. LIGHT	0	0
153	Q4422O	FUSELAGE LIGHTS	0	0
154	Q4423C	WING TIP TAPE LIGHTS	0	0
155	Q4511A	RESERVOIR, HYDRAULIC NO. 1	0	0
156	Q4511B	PUMP, HYDRAULIC (TCI) NO.1	90	0
157	Q4511M	INDICATOR, HYDRAULIC PRESSURE	0	0
158	Q4512A	RESERVOIR, HYDRAULIC NO.2	210	0
159	Q4512B	PUMP, HYDRAULIC NO. 2	0	0
160	Q4513A	RESERVOIR, UTILITY HYDRAULIC	0	0

CANNIBALIZATION DATA (CONTINUED)

PART NUMBER	WUC	PART DESCRIPTION	ADDITIONAL CANNIBALIZATION TIME (MIN)	PROB OF BROKEN PART
161	Q4513C	PUMP, HYDRAULIC (TCI) GROUP I	90	0
162	Q4513L	HYDRAULIC FLOW REGULATOR	0	0
163	Q4513N	PRESSURE INDICATOR, HYDRAULIC	0	0
164	Q4513P	PRESSURE TRANSMITTER HYDRAULIC	0	0
165	Q4521A	COMPRESSOR, HYDRAULIC DRIVEN	0	0
166	Q4521C	SEPARATOR, MOISTURE, PNUEMATIC	0	0
167	Q4521H	PUMP, OIL, AIR COMPRESSURE	0	0
168	Q4624A	PYLON ASSEMBLY	0	0
169	Q4631D	AIR REFUEL ACTUAT RECEPTACLE	0	0
170	Q4631F	AIR REFUELING AMPLIFIER, IFR	0	0
171	Q4642O	FUEL INDICATING SYSTEM	0	0
172	Q4642D	INDICATOR, FUEL QUANTITY	0	0
173	Q4642E	NOT IN WUC MANUAL	0	0
174	Q4642J	SIMULATOR, FUEL QUANTITY	0	0
175	Q471AA	CONVERTER, LIQUID OXYGEN	30	0
176	Q471AB	CONTAINER, LIQUID OXYGEN	0	0
177	Q472AO	INDICATOR, OXYGEN QUANTITY	0	0
178	Q472DO	REGULATOR, DILUTER DEMAND	0	0
179	Q472FO	WIRE HARNESS, CONVERTER PROBE LEAD	30	0
180	Q472GO	REGULATOR, DILUTER DEMAND	0	0
181	Q511AA	ACCELEROMETER	0	0
182	Q511AB	AIR SPEED AND MACH NUMBER	0	0
183	Q511AD	VERTICAL VELOCITY	0	0
184	Q511AE	TRUE AIR SPEED	0	0
185	Q511AJ	ALTIMETER AAU-19 325001	0	0
186	Q511AK	ALTIMETER AAU-19 A4132210002	0	0
187	Q511AL	ALTIMETER AAU-19 A4132210003	0	0
188	Q511CA	TUBE, PITOT STATIC	0	0
189	Q512AB	COMPASS, STANDBY	0	0
190	Q512CO	FLIGHT DIRECTOR GROUP	0	0
191	Q512CA	COMPUTER, FLIGHT DIRECTOR	0	0
192	Q512CG	CONTROL, ADJUSTMENT	0	0
193	Q512CK	CONTROL MODE SELECTOR	0	0
194	Q512CL	INDICATOR, HORIZONTAL SITUAT	0	0
195	Q512CM	AMP, HORIZONTAL SITUAT INDIC	0	0
196	Q513AO	GENERATOR, AURAL TONE	0	0
197	Q513BO	ANGLE-OF-ATTACK TRANSMITTER	0	0
198	Q513CO	AURAL STALL WARN CONTROL PANEL	0	0
199	Q513EC	INDICATOR, ANGLE-OF-ATTACK	0	0
200	Q513FO	INDEXER LIGHT ASSEMBLIES	0	0
201	Q513HO	AIR DATA COMPUTER 42400-227-1	120	0
202	Q513HB	STATIC PRESSURE COMPENSATOR	0	0
203	Q513HC	PRESSURE RATIO TRANDUCER	0	0
204	Q513HD	LOGARITHMIC PRESSURE CONTROL	0	0
205	Q513HE	MACH SECTOR RESISTOR & CAM MOD	0	0
206	Q513HH	COMPUTER AMPLIFIER	0	0
207	Q513XO	ALTITUDE ENCODER UNIT	0	0
208	Q5211O	AILERON-RUDDER INTERCONN	0	0
209	Q5211A	ARI AMPLIFIER, AUTO FLIGHT CONTROL	150	0
210	Q5224O	AIRCRAFT ACCELEROMETER	0	0
211	Q5225O	AIRCRAFT ACCELEROMETER (LATERAL)	0	0
212	Q5227O	RATE GYRO (ROLL)	0	0
213	Q5228O	RATE GYRO (YAW)	0	0
214	Q522AO	CONTROLLER, ENGAGING, AUTO PILOT	0	0
215	Q522BO	TRANSDUCER, MOTIONAL PICK UP	0	0
216	Q522EO	AMPLIFIER, CONTROL	90	0

CANNIBALIZATION DATA (CONTINUED)

PART NUMBER	WUC	PART DESCRIPTION	ADDITIONAL CANNIBALIZATION TIME (MIN)	PROB OF BROKEN PART
217	Q522EB	AMPLIFIER, SERVO, YAW	0	0
218	Q522EC	AMP, SERVO ROLL RIGHT	0	0
219	Q522EQ	SYNC DRIVE, PITCH, TWO SPEED	0	0
220	Q5511A	RECORDER, (VEL, GRAV, HGT)	0	0
221	Q5511C	MAGAZINE, (VEL, GRAV, HGT)	0	0
222	Q5515A	INDICATOR, STATISTICAL ACCELER	0	0
223	Q5515B	TRANSDUCER, STATIST ACCELER	0	0
224	Q552BO	NOT IN WUC MANUAL	0	0
225	Q552CO	NOT IN WUC MANUAL	0	0
226	Q6330O	NOT IN WUC MANUAL	0	0
227	Q6331O	NOT IN WUC MANUAL	0	0
228	Q6331C	NOT IN WUC MANUAL	0	0
229	Q6331H	NOT IN WUC MANUAL	0	0
230	Q6331J	NOT IN WUC MANUAL	0	0
231	Q6331N	NOT IN WUC MANUAL	0	0
232	Q6335D	NOT IN WUC MANUAL	0	0
233	Q6335A	NOT IN WUC MANUAL	0	0
234	Q6335C	NOT IN WUC MANUAL	0	0
235	Q7131O	RECEIVER, R-2032/ARN-127	0	0
236	Q7132O	CONTROL, C10124/ARN-127	0	0
237	Q7135O	INDICATOR, ILS (AFT COCKPIT)	0	0
238	Q71B1O	CONTROL COMPUTER CP723B/ASN	18	0
239	Q71BZO	AMPLIFIER, COMPUTER	0	0
240	Q71B2A	AMPLIFIER A803, A804, A806	0	0
241	Q71B2C	PREAMPLIFIER A807	0	0
242	Q71B2E	RANGE COMPUTER MECH A810	0	0
243	Q71B3O	INDICATOR, GROUND SPEED	0	0
244	Q71H1O	CONTROL PANEL C-4779/ASN	0	0
245	Q71H2O	COMPUTER NAVIGATIONAL CP-733/ASN-63	30	0
246	Q71H2A	ELECTRONIC SUBASSEMBLY	0	0
247	Q71H3N	DC AMPLIFIER	0	0
248	Q71H3U	SUMMING AMPLIFIER	0	0
249	Q71H4A	GYRO TEMPERATURE CONTROL	0	0
250	Q71H4F	OVEN COMPONENTS & ELEC ASSEMBLY	0	0
251	Q71H4L	POWER SUPPLY A25	0	0
252	Q71H4R	INTEGRATOR SHAFT A24	0	0
254	Q71H5O	DISTRIBUTION UNIT, OUTPUT SIGNAL	18	0
255	Q71H5A	SERVO, TRUE HEADING A1	0	0
256	Q71H6O	PLATFORM, GYRO STABILIZED	0	0
257	Q71H6B	GYROSCOPE (UPPER)	0	0
258	Q71LEO	AMPLIFIER, POWER SUPPLY REC AM-2349	60	0
259	Q71LJO	BEARING DISTANCE HEADING INDICATOR	0	0
260	Q71LMO	INDICATOR, BEARING, DISTANCE	0	0
261	Q71LQA	ANTENNA, ADF, AS-909/ARA-48	0	0
262	Q71LWO	MIKE ADAPTER ASSEMBLY	0	0
263	Q71LXO	HEADSET/MICROPHONE CORD, COCKPIT,	0	0
264	Q71MDO	NOT IN WUC MANUAL	0	0
265	Q71MEO	NOT IN WUC MANUAL	30	0
266	Q71MGO	CONTROL, C-6280/APX TRANS	0	0
267	Q71MHO	INTERCOMMUNICATION STATION	0	0
268	Q71SOO	INTERROGATOR SET AN/APX-76	0	0
269	Q71SBO	RECEIVER-TRANSMITTER, RADIO	0	0
270	Q71SBG	TRANSMITTER ASSEMBLY 2A2	0	0
271	Q71SCO	SWITCH AMPLIFIER (UNIT 3)	0	0
272	Q71SDO	SYNCHRONIZER SN-416A/APX-76	0	0
273	Q71ZOO	AN/ARN-118 TACAN SYSTEM	0	0

CANNIBALIZATION DATA (CONTINUED)

PART NUMBER	WUC	PART DESCRIPTION	ADDITIONAL CANNIBALIZATION TIME (MIN)	PROB OF BROKEN PART
274	Q71ZAO	RECEIVING TRANSMITER RT-1159/A	0	0
275	Q71ZBO	ADAPTER MX9577/A OR MX-10070	60	0
276	Q71ZCO	MOUNT (REC/TRANS)	0	0
277	Q71ZDO	CONTROL UNIT C-10062/A	0	0
278	Q71ZEO	MOUNT (DIGITAL TO ANALOG)	60	0
279	Q72300	RADAR ALTIMETER, AN/APN-155	0	0
280	Q723AO	RECEIVER-TRANSMITTER RT-689	0	0
281	Q723AO	VARIABLE CAPACITY OSCILLATOR	0	0
282	Q723BO	INDICATOR, HEIGHT, ID-1090	0	0
283	Q723CO	ANTENNA, RECEIVER AS-1386	0	0
284	Q723DO	ANTENNA, TRANSMITTER AS-1442	0	0
285	Q72510	SST-181X TRANSPONDER ASSEMBLY	0	0
286	Q73100	ATTITUDE REFER BOMB COMPUTER	0	0
287	Q731BO	AMPLIFIER POWER SUPPLY	0	0
288	Q731CO	ADAPTER COMPENSATOR COMPASS	0	0
289	Q731CA	SYNCRO ASSEMBLY	0	0
290	Q731DO	COMPUTER, BOMB RELEASE ANGLE	0	0
291	Q731EO	COMPUTER, BOMBING FLIGHT DIRECTOR	0	0
292	Q731FO	CONTROLLER COMPASS, C4781/AUB7	0	0
293	Q731GO	DISPLACEMENT GYRO	0	0
294	Q731HO	INDICATOR, ATTITUDE REFERENCE	0	0
295	Q73AKO	GYROSCOPE, RATE SWITCHING MC-1	0	0
296	Q731MO	DUAL TIMER MS27264	0	0
297	Q731NO	REMOTE ATTITUDE INDICATOR, ARU-13A	42	0
298	Q732AO	INDICATOR, STANDBY, VERT REFER	0	0
299	Q732CO	PANEL ASSY, STANDBY INVERTER	0	0
300	Q73510	CONTROL, COMPUTER CURSOR	0	0
301	Q73520	COMPUTER CONTROL C-6480	0	0
302	Q73530	BALLISTICS COMPUTER	0	0
303	Q7352B	NOT IN WUC MANUAL	0	0
304	Q7253H	CROSS TRACK RANGE SERVOMECHANISM	0	0
305	Q7353V	DIRECT CURRENT AMPLIFIER	0	0
306	Q73540	COMPUTER CONTROL ASSEMBLY	0	0
307	Q73560	WEAPON DELIVERY PANEL	0	0
308	Q73G00	DIGITAL MODULAR AVIONICS SYSTEM	0	0
309	Q73GAO	NAVIGATION COMPUTER CP-1314/A	306	0
310	Q73GBO	LORAN RECEIVER R-1960/A	0	0
311	Q73GCO	KEYER CONTROL C-9474	0	0
312	Q73GDO	SIGNAL DATA CONVERTER	0	0
313	Q73GEO	POWER SUPPLY PP-7428/A	270	0
314	Q73GFO	DIGITAL DISPLAY INDICATOR	0	0
315	Q73GHO	NAVIGATIONAL COMPUTER SET CONTROL	0	0
316	Q73GHA	CIRCUIT CARD ASSEMBLY	0	0
317	Q73GNO	INERTIAL MEASURE UNIT BUFF	0	0
318	Q73BPO	INERTIAL MEASURE UNIT	0	0
319	Q73GQO	NOT IN WUC MANUAL	0	0
320	Q74810	GYROSCOPE, LEAD COMPUTING	0	0
321	Q74830	NOT IN WUC MANUAL	0	0
322	Q74840	OPTICAL DISPLAY UNIT SU-40/ASG-26A	150	0
323	Q74910	NOT IN WUC MANUAL	0	0
325	Q7492C	NOT IN WUC MANUAL	0	0
326	Q74BAO	POWER SUPPLY PP-4848	18	0
327	Q74BBO	CONTROL-OSCILLATOR C-7349 (LRU-18)	18	0
328	Q74BCO	SYNCHRONIZER, ELECTRONIC (LRU-17)	0	0
329	Q74BDO	COMPUTER, TARGET INTERCEPT (LRU-1)	24	0
330	Q74BEO	POWER SUPPLY PP-4847	18	0

CANNIBALIZATION DATA (CONTINUED)

PART NUMBER	WUC	PART DESCRIPTION	ADDITIONAL CANNIBALIZATION TIME (MIN)	PROB OF BROKEN PART
331	Q74BFO	TRANSMITTER, RADAR T-1050 (LRU-5)	78	0
332	Q74BGO	MODULATOR-OSCILLATOR MD-735 (LRU-3)	18	0
333	Q74BHO	NOT IN WUC MANUAL	0	0
334	Q74BJO	CONTROL, ANTENNA C-7348 (LRU-7)	24	0
335	Q74BKO	OSCILLATOR, R-F O-1430A (LRU-21)	18	0
336	Q74BLO	STABILIZER ASSY MX-7781 (LRU-4)	30	0
337	Q74BMO	NOT IN WUC MANUAL	0	0
338	Q74BNO	NOT IN WUC MANUAL	0	0
339	Q74BPO	WAVE GUIDE ASSEMBLY CG-3365	78	0
340	Q74BQO	INDICATOR, INTRA TARGET (LRU-13)	0	0
341	Q74BSO	CONTROL, RADAR SET (LRU-9)	0	0
342	Q74BTO	CONTROL-MONITOR (LRU-8)	0	0
343	Q74BUO	INDICATOR, CONTROL C-7347 (LRU-11)	30	0
344	Q74BVO	ANTENNA AS-2072A (LRU-16)	60	0
345	Q74BWO	RACK, ELECT EQUIP MT-3868 (LRU-14)	180	0
346	Q74BXO	CABLE, ASSY CX-10548 (LRU-15)	0	0
347	Q74C2O	NOT IN WUC MANUAL	0	0
348	Q74CAO	INDICATOR CONTROL UNIT DSCG (LRU-11)	0	0
349	Q74CBO	INDICATOR AZ, EL, & RANGE (LRU-12)	60	0
350	Q74CCO	INDICATOR AZ, EL, & RANGE (LRU-13)	60	0
351	Q74FAO	TG-213/A TUNING DRIVE	48	0
352	Q74KAO	NOT IN WUC MANUAL	120	0
359	Q75190	NOT IN WUC MANUAL	0	0
360	Q75310	MULTIPLE EJECTOR RACK CENTERLINE	0	0
361	Q7531C	SENSING SWITCH	0	0
362	Q75320	TRIPLE EJECTION RACK	0	0
363	Q75600	MISSILE FIRING CIRCUITS	0	0
364	Q7561A	AUX ARMAMENT CONTROL PANEL	0	0
365	Q7561B	L-H SIDEWINDER MISSILE ASSEMBLY	0	0
366	Q7561C	R-H SIDEWINDER MISSILE ASSEMBLY	0	0
367	Q7561F	MISSILE FIRING RELAY PANEL	0	0
368	Q7561L	ARMAMENT RELAY PANEL ASSEMBLY	0	0
369	Q75930	STATION SELECTOR SWITCH	0	0
370	Q7591K	WIRE HARNESSS, MULTIPLE WEAPON	0	0
371	Q75930	INTERVALOMETER, P/N	0	0
372	Q75950	WEAPONS RELEASE CONTROL, C8977/A	0	0
373	Q75E00	GUN, PALLETIZED INTERNAL	348	0
374	Q75E1A	AMMUNITION DRUM	0	0
375	Q75E1C	EXIT UNIT	0	0
376	Q75E1D	UNLOADER UNIT	0	0
377	Q75E1E	FEEDER UNIT	0	0
378	Q75E1F	DRIVE, HYDRAULIC, GUN PALLET	0	0
379	Q75E1J	FILTER HYDRAULIC, GUN PALLET	0	0
380	Q75E1N	PURGE ASSEMBLY	0	0
381	Q75E1X	DRIVE ASSEMBLY	0	0
382	Q75E20	GUN, INTERNAL 20 MM	0	0
383	Q75E2C	CONTACT ASSEMBLY FIRING	0	0
384	Q75E2F	BARREL SET,GUN	0	0
385	Q75E2G	SOLENOID CLEARING	0	0
386	Q76500	AN/ALE-40 CHAFF/FLARE DISPENSER	0	0
387	Q765AO	CHAFF/FLARE PROGRAMMER	0	0
388	Q765AA	CHAFF MODULE ASSEMBLY	0	0
389	Q765BO	SEQUENCE SWITCH ASSEMBLY	0	0
390	Q765BA	DRIVER PCB	0	0
391	Q765CO	SLAVE DISPENSER 134025-0001	0	0
392	Q765DO	CHAFF PAYLOAD MODULE 133896	0	0

CANNIBALIZATION DATA (CONTINUED)

PART NUMBER	WUC	PART DESCRIPTION	ADDITIONAL CANNIBALIZATION TIME (MIN)	PROB OF BROKEN PART
393	Q765HO	MASTER DISPENSER 1340001-0001	0	0
394	Q765HB	CABLE ASSEMBLY 1333882-0002	0	0
395	Q765JO	COCKPIT CONTROL UNIT	0	0
396	Q76G99	NOC	0	0
397	Q76GAO	SIGNAL PROCESSOR	0	0
398	Q76GAB	READ ONLY MEMORY A2	0	0
399	Q76GAD	DISPLAY DRIVER	0	0
400	Q76GAE	VIDEO PROCESSOR A5	0	0
401	Q76GAF	CPU A6	0	0
402	Q76GBO	RECEIVER (R1854A)	0	0
403	Q76GCO	AMPLIFIER DETECTOR	0	0
404	Q76GCA	TRIPLEXER/LIMITER DETECTOR	0	0
405	Q76GCC	VIDEO AMPLIFIER A2, A4	0	0
406	Q76GCD	REGULATOR A7	0	0
407	Q76GDO	INDICATOR CONTROL (TDU)	0	0
408	Q76GEO	AZIMUTH INDICATOR	0	0
409	Q77J1O	EXPOSURE FREQUENCY CONTROL	0	0
410	Q77J2A	PERISCOPE, DRS, LD-70A	0	0
411	Q77J2K	KD-42A CAMERA	0	0
412	Q77X6O	KB-25A CAMERA	0	0
413	Q9321A	CONTAINER, STORAGE SYSTEM	0	0
414	Q93217	DOOR 107	0	0
576	Q4631C	VALVE, RECEPTACLE SELECTOR	0	0
578	Q75110	AERO 3B LAUNCHER	0	0
579	Q75130	AERO -7A	0	0
580	Q75140	AERO-27A/BRU-5A	48	0
580	Q75140	AERO-27A/BRU-5A	0	0
581	Q7514A	NOT IN WUC MANUAL	0	0
582	Q7514C	BREECH ASSEMBLY	0	0
583	Q7514D	PISTON ASSEMBLY	0	0
584	Q75150	LAU-7A/A LAUNCHER	0	0
585	Q7515C	MECHANISM ASSEMBLY	0	0
586	Q75170	LAU-34/A TYPES LAUNCHER	0	0
587	Q751CO	ARMAMENT PYLONS	0	0
588	Q751CA	PYLON, INBOARD ARMAMENT, R-H	0	0
589	Q751CB	PYLON, OUTBOARD ARMAMENT, L-H	0	0
590	Q751CC	PYLON, OUTBOARD ARMAMENT, R-H	0	0
591	Q751CD	PYLON, INBOARD ARMAMENT, L-H	0	0
592	Q751DO	MAU-12A BOMB RACK	0	0
593	Q751NO	SUU-20/A ROCKET/BOMB DISPENSER	0	0
594	Q751ND	BOMB INTERVALOMETER	0	0
595	Q751QO	LAU-88 LAUNCHER	0	0
596	Q751SO	NOT IN WUC MANUAL	0	0
597	Q76BOO	NOT IN WUC MANUAL	0	0
598	Q76BAO	NOT IN WUC MANUAL	30	0
599	Q76BAA	NOT IN WUC MANUAL	0	0
600	Q76BAA	NOT IN WUC MANUAL	42	0
601	Q76BBO	NOT IN WUC MANUAL	42	0
602	Q76BCO	NOT IN WUC MANUAL	42	0
603	Q76BDO	NOT IN WUC MANUAL	60	0
604	Q76BEO	NOT IN WUC MANUAL	78	0
605	Q76BFO	NOT IN WUC MANUAL	60	0
606	Q76BHO	NOT IN WUC MANUAL	60	0
607	Q76BKO	NOT IN WUC MANUAL	90	0
608	Q76BLO	NOT IN WUC MANUAL	60	0
609	Q76BMO	NOT IN WUC MANUAL	60	0

CANNIBALIZATION DATA (CONTINUED)

PART NUMBER	WUC	PART DESCRIPTION	ADDITIONAL CANNIBALIZATION TIME (MIN)	PROB OF BROKEN PART
610	Q76BNO	NOT IN WUC MANUAL	60	0
611	Q76BRO	NOT IN WUC MANUAL	60	0
612	Q76BSO	NOT IN WUC MANUAL	60	0
613	Q76BUO	NOT IN WUC MANUAL	60	0
614	Q76BVO	NOT IN WUC MANUAL	60	0
616	Q76BYO	NOT IN WUC MANUAL	60	0
638	Q23000	BASIC J79 TURBO JET ENGINE	0	0
639	Q2353R	AMPLIFIER,TEMP CONTROL	0	0
640	Q2394A	TRANSMITTER, FUEL FLOW	0	0
641	Q2373D	RING, SEAL, MATING	0	0
642	Q23960	ENGINE CONTROLS	0	0
643	Q2381A	STARTER, CARTRIDGE/PNEUMATIC	0	0
644	Q2392A	INDICATOR, EXHAUST TEMPERATURE	0	0
645	Q2361L	MAINIFOLD, FUEL INLET	0	0
646	Q2361C	ACTUATOR, ROTARY	0	0
647	Q2362A	FUEL PUMP, AFTERBURNER	0	0
648	Q2397A	VALVE, ANTI-ICING AIR	0	0
649	Q2391B	TACHOMETER	0	0
659	Q2361D	MAIN FUEL PUMP	0	0
660	Q2361B	CONTROL,MAIN FUEL	0	0
661	Q2362V	HOSE, AFTERBURNER FUEL PUMP	0	0
662	Q2362C	CONTROL,FUEL, AFTERBURNER	0	0
663	Q2393B	INDICATOR, OIL PRESSURE	0	0
664	Q2395A	INDICATOR, NOZZLE POSITION	0	0
665	Q2395B	TRANSMITTER, NOZZLE POSITION	0	0
666	Q23312	CASING ASSEMBLY, INNER	0	0
667	Q23110	GEARBOX ASSEMBLY, FRONT	0	0
668	Q23140	GEARBOX ASSEMBLY, REAR	0	0
669	Q23220	STATOR ASSEMBLY	0	0
670	Q23230	ROTOR ASSEMBLY	0	0
671	Q23420	ROTOR AND SEAL, TURBINE	0	0
672	Q23430	FRAME ASSEMBLY, TURBINE	0	0
681	Q1325D	MAIN LANDING GEAR TIRE (LEFT)	0	0
682	Q1326B	MAIN LANDING GEAR TIRE (RIGHT)	0	0

IV.5 TRAP DATA (CARD TYPE #25)

BASE #1 (MOB)

TRAP TYPE	DESCRIPTION	STOCK LEVEL
1	TER	100
2	MER	400
6	ECM ADAPTOR	200
7	ECM POD	200
11	EXTERNAL TANK	200

BASE #2 (REAR MAINTENANCE)

TRAP TYPE	DESCRIPTION	STOCK LEVEL
1	TER	50
2	MER	400
6	ECM ADAPTOR	200
7	ECM POD	100
11	EXTERNAL TANK	200

CHAPTER V

COMMUNICATION SYSTEM DATA

V.1 AIR TRAFFIC CONTROL DATA (CARD TYPE #17/11)

TAKE-OFF TIMES (IN SECONDS)

BASE #	CARD #	AIRCRAFT TO AIRCRAFT	FLIGHT TO FLIGHT	TAKEOFF TO LANDING	DESCRIPTION
1	1	15	60	90	FULLY OPERATION AIR BASE
1	2	10	15	15	MAIN RUNWAY IS NOT IN USE
1	3	-150	15	15	SURFACE W/MOS HAS RESIDUAL CRATERS
1	4	-120	-120	-120	FACILITY #46 IS DAMAGED
1	5	-120	-120	-120	FACILITY #47 IS DAMAGED

LANDING TIMES (IN SECONDS)

BASE #	CARD #	AIRCRAFT TO AIRCRAFT	FLIGHT TO FLIGHT	TAKEOFF TO LANDING	DESCRIPTION
1	1	20	60	90	FULLY OPERATION AIR BASE
1	2	10	30	30	MAIN RUNWAY IS NOT IN USE
1	3	-200	30	30	SURFACE W/MOS HAS RESIDUAL CRATERS
1	4	-120	-120	-120	FACILITY #46 IS DAMAGED
1	5	-120	-120	-120	FACILITY #47 IS DAMAGED

CHAPTER VI

CROSS-REFERENCES

VI.1 TASK CROSS-REFERENCE

TSAR TASK	TASK DESCRIPTION	PAGES
1	TIRES	III-8,50
6	FUSELAGE	III-9,51
50	WINGS	III-45,54
66	AIR INDUCTION SYSTEM	III-42,56
95	COCKPITS	III-8,58
108	EJECTION SEAT	III-15,59
119	CANOPY SYSTEM	III-15,60
120	CANOPY SYSTEMS	III-42,60
153	LANDING GEAR SYSTEM	III-16,63
177	MAIN LANDING GEAR	III-16,66
209	NOSE LANDING GEAR	III-42,69
232	WHEEL & BRAKE SYTEM	III-8,71
261	ARRESTING GEAR SYSTEM	III-8,73
277	CONTROL STICK MECHANISM	III-42,75
293	LATERAL CONTROL SYSTEM	III-42,77
319	STABILIZOR SYSTEM	III-42,79
346	RUDDER SYSTEM	III-42,81
372	FLAP SYSTEM	III-16,83
396	SPEED BRAKE SYSTEM	III-16,85
413	LEAD EDGE SLAT SYSTEM	III-42,87
442	AIR CONDITIONING	III-13,89
458	PRESSURIZATION	III-13,90
470	RAIN REMOVAL SYSTEM	III-13,91
475	ANTI-G SYSTEM	III-13,92
478	RELAY PANELS	III-22,93
502	MAIN POWER SUPPLY, AC	III-95
508	DC POWER SYSTEM	III-8,96
521	GENERATOR SYSTEM, 30-KVA	III-11,97
529	INTERIOR LIGHTING SYSTEM	III-11,98
544	EXTERIOR LIGHTING SYSTEM	III-11,99
557	HYDRAULIC SYSTEMS	III-16
581	PNEUMATIC SYSTEMS	III-16,102
597	INTERNAL FUEL SYSTEM	III-45,104
611	EXTERNAL FUEL SYSTEM	III-8,105
626	AIR REFUELING SYSTEM	III-45,107
646	FUEL CONTROL SYSTEM	III-22,109
667	LIQUID OXYGEN SYSTEM	III-13,111
676	OXYGEN DISTRIBUTION SYSTEM	III-13,112
687	FIRE WARNING AND OVERHEAT SYSTEM	III-11,113
695	FLIGHT INSTRUMENT SYSTEM	III-22,114
708	NAVIGATIONAL INSTRUMENT SYSTEM	III-22,115
728	AIR DATA COMPUTER SYSTEM	III-22,117
746	AUTO FLIGHT CONTROL SYSTEM	III-20,119
753	FLIGHT CONTROL GROUP AN/ASA-32	III-20,120
769	VELOCITY, GRAVITY, HEIGHT	III-22,121
837	INTEGRATED ELECTRONIC CENTRAL	III-28,128
860	INTEGRATED ELECTRONIC CENTRAL	III-26,129
878	RADIO EQUIPMENT, SECURE VOICE	III-26,131
881	INTERROGATOR SET AN APX-76	III-28,132
892	MARK XII IFF EQUIPMENT	III-28,133
897	71Xx	III-28
898	INTERROGATOR SET AN APX-81	III-28,134
903	AN/ARN-118 TACAN SYSTEM	III-28,135
914	RADAR ALTIMETER AN APN-155	III-28,136
926	SST [illegible] RADAR TRANSPONDER	III-28,137

TASK CROSS-REFERENCE (CONTINUED)

TSAR TASK	TASK DESCRIPTION	PAGES
932	ATTITUDE REF BOMB COMPUTER SYSTEM	III-22,138
950	SC ATTITUDE INDICATOR SYSTEM	III-22,140
957	COMPUTER SYSTEM AN/ASQ-91	III-32,141
970	DIGITAL MODULAR AVIONICS	III-32,142
987	LEAD COMPUTING SIGHT	III-34,144
995	74900	III-34,145
1004	FIRE CONTROL SYSTEM	III-34,146
1031	74C00	III-34,148
1041	MISSILE AUXILIARY GROUP	III-34,149
1047	74K00	III-34,150
1050	751XX	III-36
1051	75100	III-36,151
1064	75300	III-36,152
1081	TRIPLE EJECTION RACK	III-36,153
1099	MULTIPLE WEAPONS RELEASE SYSTEM	III-36,155
1109	GUN PALLET INTERNAL	III-36,156
1132	AN/ALE-40 CHAFF/FLARE	III-30,158
1149	RADAR WARNING RECEIVER, AN/ALR	III-30,160
1167	76K00	III-30,162
1175	C-6175 CONTROL INDICATOR	III-30,163
1182	AN/ALQ-119 ELECTRONIC CM	III-30,164
1190	DIRECT RADAR SCOPE RECORDING SYS	III-40,165
1194	COMBAT DOCUMENTATION SYSTEM	III-40,166
1200	77XXX	III-40
1201	91200	III-15,167
1204	DRAG CHUTE CONTROL SYSTEM	III-42
1205	STORAGE SYSTEM	III-8,168
1216	96100	III-15,169
1220	961XX	III-15,170
1223	MISC AIRCRAFT EXPLOSIVE DEVICES	III-15,171
1303	BASIC J79 TURBO JET ENGINE	III-19,178
1400	REFUEL	III-182,273
1401	SHELTER AIRCRAFT	III-182
1403	LOAD GUNS	III-182
1404	HOT-PIT REFUEL	III-182
1405	DECONTAMINATION	III-182
1411	BATTLE DAMAGE REPAIR	III-183,187,273
1412	BATTLE DAMAGE REPAIR	III-184,187,273
1441	AIRBASE DAMAGED AIRCRAFT REPAIR	III-185,188,273
1501	25 HOUR PHASE	III-186,273
1502	50 HOUR PHASE	III-186,273
1503	150 HOUR PHASE	III-186,273
1504	300 HOUR PHASE	III-186,273
1505	600 HOUR PHASE	III-273

VI.2 PERSONNEL CROSS-REFERENCE

PERSONNEL TYPE	AFSC	DESCRIPTION	PAGES
1	431X1C	FLIGHTLINE	III-7,50,51,54, 56,58,63,66,69, 71,73,75,77,96, 98,99,102,104, 105,107,109,111, 168,172,178,182, 183,184,185,187, 188, IV-2,3,5,6, 7,9,
2	427X5	AIRFRAME REPAIR	III-9,51,54,56, 58,60,66,69,73, 77,79,81,83,85, 87,98,99,115, 151,158,173,176, 178, IV-2,3,5,6, 7,9,
3	423X0	ELECTRICAL SYS	III-11,56,59,63, 71,73,75,77,79, 83,85,87,93,95, 96,97,98,99,100, 104,105,107,109, 113,172,178, IV-2,3,5,6,7,9
4	423X1	ENVIRONMENTAL SYS	III-13,60,89,90, 91,92,111,112, IV-2,3,5,6,7,9
6	423X4	PNEUDRAULICS	III-16,56,60,63, 66,69,71,73,77, 79,81,83,85,87, 100,102,107,156, 178, IV-2,3,5, 6,7,9
7	426X2	ENGINE	III-18,178,183, 184,185,187,188, IV-2,3,5,6,7,9
8	325X0	AUTOPILOT	III-20,54,58,75, 77,79,81,93,119, 120, IV-2,3,5,6, 7,9
9	325X1	AVIONICS INST	III-22,56,58,63, 79,81,83,87,89, 90,93,100,102, 109,114,115,117, 121,128,138,140, 178, IV-2,3,5,7,9
11	431X1C	WHEEL/TIRE	III-25, IV-2,3, 5,7,9
12	328X0	RADIO COMM	III-26,93,115, 123,128,129,131, 170, IV-2,3,5,6, 7,9

PERSONNEL CROSS-REFERENCE (CONTINUED)

PERSONNEL TYPE	AFSC	DESCRIPTION	PAGES
13	328X1	RADAR NAVIGATION	III-28,124,128, 129,132,133,134, 135,136,137, IV-2,3,5,6,7,9
16	321X2Q	FIRE CONTROL	III-34,51,90,144, 145,146,148,149, 150,153, IV-2,3, 5,6,7,9
18	427XO	MACHINIST	III-38,151,178, 266, IV-2,3,5,7,9
19	427X4	WELDER	III-39,267, IV-2,3,5,7,9
20	404X1	CAMERA	III-40,122,166, 219,256, IV-2,3, 5,7,9
21	431X1C	HEAVY REPAIR	III-42,51,56,60, 66,69,75,77,79, 81,83,87,168, 178,266,267, IV-2,3,5,7,9
22	316X1L	MISSILE MAINT	III-48, IV-2,3, 5,7,9
23	4232X3	FUEL SYSTEMS	III-45,54,104, 105,107,109,172, 267, IV-2,3,5,7,9
25	531X5	N.D.I.	III-46, IV-2,3, 5,7,9
26	531X4	CORROSION CONTROL	III-46,266,267, IV-2,3,5,7,9
27	462GO	GUN SERVICE	III-47,202,203, 204,205,251,252, 253,254,255,256, 257,258,259,260, 261,262, IV-2,3, 5,7,9,
28	462LO	LOADER	III-47,152,153, 155,173,273, IV-2,3,5,7,9
29	322X2	PAVE SPIKE	III-47, IV-2,3, 5,7,9
30	461XO	MUNITIONS MAINT	III-48, IV-2,5, 7,9
31	431X1C	FLIGHTLINE	III-7, IV-2,5, 6,7,9
32	427X5	AIRFRAME REPAIR	III-9, IV-2,5, 6,7,9
33	423XO	ELECTRICAL SYS	III-11, IV-2,5, 6,7,9
34	423X1	ENVIRONMENTAL SYS	III-13, IV-2,5, 6,7,9
36	423X4	PNEUDRAULICS	III-16, IV-2,5, 6,7,9
37	426X2	ENGINE	III-18, IV-2,5, 6,7,9

PERSONNEL CROSS-REFERENCE (CONTINUED)

PERSONNEL TYPE	AFSC	DESCRIPTION	PAGES
38	325X0	AUTOPILOT	III-20, IV-2,5, 6,7,9
39	325X1	AVIONICS INST	III-22, IV-2,5, 7,9
41		GENERAL PURPOSE	III-9, IV-2,3, 5,7,9
42	328X0	RADIO COMM	III-26, IV-2,5, 6,7,9
43	328X1	RADAR NAVIGATION	III-28, IV-2,5, 6,7,9
46	321X2Q	FIRE CONTROL	III-34, IV-2,5, 6,7,9
51	431X1C	FLIGHTLINE	III-7, IV-2,5, 6,7,9
52	427X5	AIRFRAME REPAIR	III-9, IV-2,5, 6,7,9
53	423X0	ELECTRICAL SYS	III-11, IV-2,5, 6,7,9
54	423X1	ENVIRONMENTAL SYS	III-13, IV-2,5, 6,7,9
56	423X4	PNEUDRAULICS	III-16, IV-2,5, 6,7,9
57	426X2	ENGINE	III-18, IV-2,5, 6,7,9
58	325X0	AUTOPILOT	III-20, IV-2,5, 6,7,9
59	325X1	AVIONICS INST	III-22, IV-2,6, 7,9
62	328X0	RADIO COMM	III-26, IV-2,5, 6,7,9
63	328X1	RADAR NAVIGATION	III-28, IV-2,5, 6,7,9
66	321X2Q	FIRE CONTROL	III-34, IV-2,5, 6,7,9
70	462W0	WEAPON CONTROL	III-36,151,152, 153,155,156,173, IV-2,3,6,7,9
75	423X2	EGRESS	III-15,59,60,167, 169,171, IV-2,3, 6,7,9
78	328X4	INERTIAL SYSTEMS	III-32,93,115, 124,125,126,128, 141,142,224,225, 242, IV-2,3,6,7,9
79	321X2Q	FIRE CONTROL	III-34,242,243, 244,245,246,247, 248,249,250,251, IV-2,3,5,6,7,9
80	328X0	RADIO COMM	III-26,203,219, 220,221,222,223, 225,226,227,228, 229,230,231,232, 233,234,235,236, IV-2,3,5,6,7,9

PERSONNEL CROSS-REFERENCE (CONTINUED)

PERSONNEL TYPE	AFSC	DESCRIPTION	PAGES
81	328X1	RADAR NAVIGATION	III-28,219,220, 221,222,223,225, 229,230,231,232, 233,234,235,236, 237, IV-3,4,5,6, 7,9
82	427X5	AIRFRAME REPAIR	III-9,189,190, 191,192,193,194, 195,196,197,198, 200,201,209,251, 252,253,257,259, 260,261,266, IV-3,4,5,6,7,9
83	423X0	ELECTRICAL SYS	III-11,197,198, 204,205,206,207, 209,266, IV-3,4, 5,6,7,9
84	423X1	ENVIRONMENTAL SYS	III-13,201,202, 209,210, IV-3,4, 5,6,8,10
85	328X3	E.C.M.	III-30,158,160, 162,163,164,176, 256,262,263,264, 265, IV-3,4,6,7, 8,10
86	423X4	PNEUDRAULICS	III-16,192,194, 195,196,197,198, 199,200,201,207, 208,209,256,257, 266, IV-3,4,5,6, 8,10
87	426X2	ENGINE	III-18,266,267, IV-3,4,5,6,8,10
88	325X0	AUTOPILOT	III-20,201,202, 205,210,211,212, 213,214,215,216, 217,218,226,241, IV-3,4,5,6,8,10
89	325X1	AVIONICS INST	III-22,201,202, 204,205,207,209, 210,211,212,213, 214,215,216,217, 218,219,226,238, 239,240,241,242, IV-3,4,6,8,10
90	322X2	SENSORS	III-24, IV-3,4, 6,8,10
100		SECURITY POLICE	III-1, IV-3,6,8,10
102		GENERAL SUPPORT	III-1, IV-3,6,8,10
103		OPS PERSONNEL	III-1, IV-3,6,8,10
104		COMMUNICATIONS	III-1, IV-3,6,8,10
191		CE/RRR	III-48, IV-3,6,8,10

PERSONNEL CROSS-REFERENCE (CONTINUED)

PERSONNEL TYPE	AFSC	DESCRIPTION	PAGES
192		CE/RRR	III-40, IV-3,6,8,10
193		CE/RRR	III-48, IV-3,6,8,10
194		CE/RRR	III-48, IV-3,6,8,10
195		CE/RRR	III-48, IV-3,6,8,10
196		CE/RRR	III-48, IV-3,6,8,10
197		CE/RRR	III-40, IV-3,6,8,10
198		CE/RRR	IV-3,6,8,10
200		CE/RRR	III-48, IV-6,8,10

VI 3 EQUIPMENT CROSS-REFERENCE

AGE TYPE	DESCRIPTION	PAGES
1	FUE HYDRANT	III-7,8,182, IV-11
2	OIL CART	III-7,43,100, IV-11,12
3	HYDRAULIC MULE	III-43,66,71, IV-11,12
4	TOW BAR	III-43, IV-11,12
11	FUEL HYDRANT SQUAD #2	IV-7,11
12	OIL CART SQUAD #2	IV-11
13	HYDRAULIC MULE SQUAD #2	IV-11
14	TOW BAR SQUAD #2	IV-11
21	FUEL HYDRANT SQUAD #3	IV-11
22	OIL CART SQUAD #3	IV-11
23	HYDRAULIC MULE SQUAD #3	IV-11
24	TOW BAR SQUAD #3	IV-11
41	LOX CART	III-43,111,112, IV-11,12
42	NITROGEN	III-43, IV-11,12
43	B-1 STA	III-43,51,59,79, IV-11,12
44	B-4 STA	III-43,89,99, IV-11,12
45	C-1 STA	III-43,51,54,56, 89, IV-11,12
46	GUN LOADER	III-43, IV-11,12
47	NE-2 LIGHT	III-43, IV-11,12
48	H-1 HEAVY	III-43, IV-11,12
49	ANAWA-6	III-43, IV-11,12
50	MC-2A LIGHT	III-43,77, IV-11,12
51	MC-1A HEAVY	III-43,60,63,71,83, 83,117, IV-11,12
52	15 TON JACK	III-43,50,69,71, 102, IV-11,12
53	20 TON JACK	III-43,66,69, IV-11,12
54	370 GAL TANK	III-43, IV-11,12
55	600 GAL TANK	III-43, IV-11,12
56	TTU-228	III-43,63,66,69, 71,77,79,81,83, 85,87,100,102, 107,109,152,172, 273, IV-11,12
57	AFM32T	III-43,60, IV-11, 12
58	AM24T-8	III-43, IV-11,12
59	AM32C-1	III-43, IV-11,12

AGE CROSS-REFERENCE (CONTINUED)

AGE TYPE	DESCRIPTION	PAGES
60	AN32A-60	III-43,63,71,73, 75,77,79,81,83, 85,87,89,90,93, 95,96,97,98,99, 100,102,104,105, 107,109,111,112, 113,114,115,117, 119,120,121,122, 123,124,125,126, 128,129,131,133, 134,135,136,137, 138,140,141,142, 144,145,146,148, 149,151,152,153, 155,156,158,160, 172,173,176,273, IV-11,12,
65	MU1-A B	III-43,151,173, IV-11,12
66	MHU-83	III-43,151,152, IV-11,12
73	ENGINE CART	III-178, IV-11
75	ENGINE STAND	III-18,178,266, 267, IV-11
76	MHU-12M	III-43, IV-11,12
77	MHU-141	III-43, IV-11,12
78	MHU-110	III-43, IV-11,12
80	FUEL TRUCK	III-7,44,104,105, 182, IV-11,12
91	ORACLE	III-44,48,49, IV-11
92	CATERPILLAR	III-44,48,49, IV-11
93	4 YD	III-44,48,49, IV-11
94	2 5 YD	III-44,48,49, IV-11
95	DUMP TRUCK	III-44,48,49, IV-11
96	EOD M-1	III-44,48,49, IV-11
97	PICKUP	III-44,48,49, IV-11,
98	MISC RRR	III-44,48,49, IV-11
99	FIRE TRUCK	III-44,48,49, IV-11

VI 4 PARTS CROSS-REFERENCE

PART NO	WUC CODE	PART DESCRIPTION	PAGES
1	Q1333C	TIRE, NOSE	III-50, IV-13,22, 30
2	Q111AA	RADOME, NOSE	III-51,189, IV-13,22,30
3	Q111BJ	FAIRING, MUZZLE BLAST GROUP I	III-10,51,189, IV-13,22,30
4	Q111BM	FAIR, FORWARD NOSE LAND GEAR DOOR	III-51,190, IV-13,22,30
5	Q111BQ	NOT IN WUC MANUAL	III-10,51,190, IV-13,22,30
6	Q111C3	DOOR, HYDRAULIC & PNEUMATIC ACCESS	III-10,51,190, IV-13,22,30
7	Q111CA	NOT IN WUC MANUAL	III-10,51,190, IV-13,22,30
8	Q111CP	DOOR, DATA LINK ACCESS (19)	III-10,51,190, IV-13,22,30
9	Q111DC	DOOR, (26 L/R) GROUP II	III-10,51,190, IV-13,22,30
10	Q111FC	SEAL ASSY, PANEL AFT MISSILE CAVITY	III-10,51,190, IV-13,22,30
11	Q111FG	FAIR ASSY, AFT ENGINE KEEL, REMOV	III-10,51,190, IV-13,22,30
12	Q111FH	FAIR ASSY, AFT MISSILE WELL	III-10,51,190, IV-13,22,30
13	Q111FU	DOOR (39 R)	III-10,51,190, IV-13,22,30
14	Q111FY	AIR, CENTERLINE STORES RACK ACCES	III-10,51,190, IV-13,22,30
15	Q111G4	DOOR (74 L/R)	III-10,51,190, IV-13,22,30
16	Q111GA	DOOR, STARTER (138)	III-10,51,190, IV-13,22,30
17	Q111GC	DOOR, STARTER EXHAUST (78)	III-10,51,190, IV-13,22,30
18	Q111GQ	DOOR, FUEL & HYDRAU ACCESS (73 L/R)	III-10,51,190, IV-13,22,30
19	Q111GR	DOOR, ENGINE ACCESS (82 L/R)	III-10,51,190, IV-13,22,30
20	Q111GS	DOOR, ENGINE ACCESS (83 L/R)	III-10,51,190, IV-13,22,30
21	Q111GU	DOOR, ENGINE ACCESS (92 L/R)	III-10,51,190, IV-13,22,30
22	Q111HA	DOOR, ENGINE AIR & ACCESS (81 L/R)	III-10,51,190, IV-13,22,30
23	Q111HC	DOOR, ENGINE ACCESS (96 L/R)	III-10,51,190, IV-13,22,30
24	Q111HD	DOOR (37 L/R)	III-10,51,190, IV-13,22,30
25	Q111HE	DOOR (38 L/R)	III-10,51,190, IV-13,22,30
26	Q111HM	DOOR (54 L/R)	III-10,51,190, IV-13,22,30
27	Q111HQ	DOOR (80)	III-10,51,190, IV-13,22,30

PART CROSS-REFERENCE (CONTINUED)

PART NO	WUC CODE	PART DESCRIPTION	PAGES
28	Q111KD	TAIL CONE	III-10,51,190, IV-13,22,30
29	Q111KE	PANEL, JET BLAST NO 1	III-10,51,190, IV-13,22,30
30	Q111KF	PANEL, JET BLAST NO 2	III-10,51,190, IV-13,22,30
31	Q111KG	PANEL, JET BLAST NO 3	III-10,51,190, IV-13,22,30
32	Q111KH	PANEL, JET BLAST NO 4	III-10,51,190, IV-13,22,30
33	Q111KJ	PANEL, JET BLAST NO 5	III-10,51,190, IV-13,22,30
34	Q111K7	PANEL ASSY, JET BLAST, TAIL CONE	III-10,51,190, IV-13,22,30
35	Q1122P	DOOR (75 L/R)	III-10,54,190, IV-13,22,30
36	Q1122L	DOOR (141 L/R)	III-10,54,191, IV-13,22,30
37	Q1123A	WING TIP ASSEMBLY, FOWARD	III-10,54,191, IV-13,22,30
38	Q1128L	DOOR, (141 L/R)	III-54,192, IV-13,22,30
39	Q1131J	VALVE, SERVO, L/R	III-17,56,192, IV-13,22,30
40	Q1132C	RING ASSY, VARIABLE BELLMOUTH	III-10,56,192, IV-13,22,30
41	Q1132D	ACTUATOR, BYPASS BELLMOUTH	III-17,56,192, IV-13,22,30
42	Q1133E	CYLINDER ASSEMBLY ACTUATOR	III-17,56,192, IV-13,22,30
43	Q1133D	VALVE ASSEMBLY, AUX AIR DOOR SYS	III-17,56,192, IV-13,22,30
44	Q1211R	PANEL PEDESTAL, COCKPIT	III-10,58,192, IV-13,22,30
45	Q1212A	CHARTBOARD AND COMPUTER STOWAGE CS	III-10,58,192, IV-13,22,30
46	Q1212F	FOOT RAMP ASSEMBLY	III-58,193, IV-13,22,30
47	Q1212G	FLOORING AND PANELS	III-10,58,193, IV-13,22,30
48	Q1226S	CONTAINER, DROGUE (REMOVABLE)	III-10,59,193, IV-13,22,31
49	Q1231E	VALVE, PNEUMATIC SELECTOR (CANOPY)	III-60,194, IV-13,22,31
50	Q1231N	CANOPY AIR STORAGE BOTTLE	III-17,60,194, IV-13,22,31
51	Q1233K	CYLINDER, CANOPY PNEUMATIC, FORWAR	III-17,60,194, IV-13,22,31
52	Q1233P	CANOPY VISCOUS DAMPER, FORWARD	III-17,60,194, IV-13,22,31
53	Q1234B	DUMP VALVE, CANOPY EMERGENCY FORWAR	III-17,60,194, IV-13,22,31
54	Q1234C	PNEUMATIC BOTTLE, EMERGENCY FORWARD	III-17,60,194, IV-14,22,31
55	Q1235D	AFT CANOPY ASSEMBLY	III-10,60,194, IV-14,22,31

PART CROSS-REFERENCE (CONTINUED)

PART NO	WUC CODE	PART DESCRIPTION	PAGES
56	Q1236K	PNEUMATIC CYLINDER, AFT	III-60,195, IV-14,23,31
57	Q1236N	CANOPY VISCOUS DAMPER, AFT	III-17,60,195, IV-14,23,31
58	Q1237B	DUMP VALVE, CANOPY EMERG AFT	III-17,60,195, IV-14,23,31
59	Q1237C	PNEUMATIC BOTTLE AFT	III-17,60,195, IV-14,23,31
60	Q1311C	SWIVELS, LANDING GEAR	III-17,63,195, IV-14,23,31
61	Q1312A	VALVE SELECTOR, P/N 14775-1	III-17,63,195, IV-14,23,31
62	Q1315C	BOTTLE, AIR, EMERGEN LAND GEAR	III-17,63,195, IV-14,23,31
63	Q1321A	SHOCK STRUT, MAIN LANDING GEAR	III-17,66,195, IV-14,23,31
64	Q1321H	CYLINDER, UPLOCK MAIN LAND GEAR	III-17,66,195, IV-14,23,31
65	Q1321M	SIDE BRACE ACTUATOR, MAIN LAND GEAR	III-17,66,195, IV-14,23,31
66	Q1322O	LANDING GEAR (LEFT)	III-17,66,195, IV-14,23,31
67	Q1322A	SHOCK STRUT, LANDING GEAR (LEFT)	III-17,66,195, IV-14,23,31
68	Q1322M	SIDE BRACE ACTUATOR, LAND GEAR LEFT	III-66,196, IV-14,23,31
69	Q1323O	MAIN LAND GEAR DOORS (RIGHT)	III-10,66,196, IV-14,23,31
70	Q1323A	CYLINDER, HYDRAUL INBRD DOOR RIGHT	III-17,66,196, IV-14,23,31
71	Q1323D	DOOR ASSY, GEAR STRUT (RIGHT)	III-10,66,196, IV-14,23,31
72	Q1323E	DOOR ASSY, OUTBOARD (RIGHT)	III-10,66,196, IV-14,23,31
73	Q1323F	DOOR ASSY, INBOARD (RIGHT)	III-10,66,196, IV-14,23,31
74	Q1324O	MAIN LAND GEAR DOORS (LEFT)	III-10,66,196, IV-14,23,31
75	Q1332O	NOSE GEAR DOOR AND UPLATCH MECHAN	III-10,69,196, IV-14,23,31
76	Q1332H	DOOR, NOSE LANDING GEAR, FORWARD	III-10,69,196, IV-14,23,31
77	Q1334A	COMPENSATOR, POWER UNIT, NOSE STEER	III-17,69,196, IV-14,23,31
78	Q1334E	POWER UNIT, STEERING	III-17,69,196, IV-14,23,31
79	Q1334J	VALVE, NOSE GEAR STEERING SELECTOR	III-17,69,196, IV-14,23,31
80	Q1341A	VALVE, BRAKE CONTROL	III-17,71,196, IV-14,23,31
81	Q1342B	BRAKE VALVE, MANUAL CONTROL	III-71,197, IV-14,23,31
82	Q1342E	ACCUMULATOR, EMERGENCY BRAKE	III-17,71,197, IV-14,23,31
83	Q1343A	VALVE, ANTI-SKID CONTROL	III-17,71,197, IV-14,23,31

PART CROSS-REFERENCE (CONTINUED)

PART NO	WUC CODE	PART DESCRIPTION	PAGES
84	Q1343B	CONTROL BOX, ANTI-SKID SYSTEM	III-12,71,197, IV-14,23,31
85	Q1343E	ANTI-SKID SENSOR	III-12,71,197, IV-14,23,31
86	Q1344O	BRAKE ASSEMBLY	III-17,71,197, IV-14,23,31
87	Q1344A	PRESSURE PLATE ASSEMBLY	III-10,71,197, IV-14,23,31
88	Q1344H	VALVE, SHUTTLE, BRAKE ASSEMBLY	III-71,197, IV-14,23,31
90	Q1344J	HOUSING, BRAKE ASSEMBLY	III-17,71,197, IV-14,23,31
91	Q1344K	BACKING PLATE, BRAKE ASSEMBLY	III-10,71,197, IV-14,23,31
92	Q1351A	ACTUATING CYLINDER, ARRESTING GEAR	III-17,73,197, IV-14,23,31
93	Q1352A	ARRESTING GEAR FAIRING ASSEMBLY	III-10,73,197, IV-14,23,31
94	Q14200	LATERAL CONTROL SYSTEM	III-75,198, IV-14,23,31
95	Q14210	AILERON ASSEMBLY	III-10,77,198, IV-14,23,31
96	Q1422A	L-H AILERON VISCUOS DAMPER	III-17,77,198, IV-14,23,31
97	Q1422B	AILERON POWER CONTROL CYLINDER	III-17,77,198, IV-14,23,31
98	Q1425B	OUTBOARD SPOILER POWER CYLINDER	III-77,199, IV-14,23,31
99	Q1425D	INBOARD SPOILER POWER CYLINDER	III-77,199, IV-14,23,31
100	Q1426A	LATERAL SERIES SERVO ACTUATOR	III-17,77,200, IV-14,23,31
101	Q1432F	STABILITOR CONTROL SYSTEM	III-17,79,200, IV-14,23,31
102	Q1436A	AUX POWER UNIT, HYDRAULIC	III-17,79,200, IV-14,23,31
103	Q1436D	MANIFOLD, AUX POWER SYSTEM	III-17,79,200, IV-14,23,31
104	Q14410	RUDDER	III-10,81,200, IV-14,23,31
105	Q1441A	HORN, RUDDER	III-10,81,200, IV-14,23,32
106	Q1442B	SERVO ACTUATOR, AILERON-RUDDER	III-17,81,200, IV-14,23,32
107	Q1442C	CYLINDER, POWER CONTROL	III-17,81,200, IV-14,23,32
108	Q1442D	HYDRAULIC DAMPER, RUDDER	III-17,81,200, IV-14,23,32
109	Q1442E	ROTARY DAMPER, RUDDER	III-17,81,200, IV-14,23,32
110	Q1442F	CYLINDER, POWER CONTROL P/N	III-17,81,200, IV-14,23,32
111	Q1455E	CYLINDER, TRAILING EDGE FLAP	III-83,200, IV-14,23,32
112	Q1455N	AIR SPEED SWITCH, FLAP BLOW-UP	III-23,83,201, IV-15,23,32

PART CROSS-REFERENCE (CONTINUED)

PART NO	WUC CODE	PART DESCRIPTION	PAGES
113	Q1456A	AIR SELECTOR VALVE, EMERG FLAP	III-17,83,201, IV-15,23,32
114	Q1456B	AIR STORAGE BOTTLE	III-17,83,201, IV-15,23,32
115	Q1461O	SPEED BRAKE	III-10,85,201, IV-15,24,32
116	Q1461A	SPEED BRAKE UPPER SKIN	III-10,85,201, IV-15,24,32
117	Q1462D	CYLINDER, POWER SPEED BRAKE	III-17,85,201, IV-15,24,32
118	Q1462F	SWIVELS, HYDRAULIC	III-17,85,201, IV-15,24,32
119	Q148DA	VALVE, SLAT POSITION SELECTOR	III-17,87,201, IV-15,24,32
120	Q148DB	CONTROL UNIT ELECTRONIC SLATS	III-23,87,201, IV-15,24,32
121	Q148DH	ACTUATOR, INBOARD SLAT PNEUMATIC	III-17,87,201, IV-15,24,32
122	Q148DJ	ACTUATOR, OUTBOARD SLAT PNEUMATIC	III-17,87,201, IV-15,24,32
123	Q148DQ	SWIVEL ASSEMBLY	III-17,87,201, IV-15,24,32
124	Q4112B	COOLING TURBINE, CABIN REFRIDG	III-14,89,201, IV-15,24,32
125	Q4112N	CABIN MOISTURE SEPARATOR	III-14,89,201, IV-15,24,32
126	Q4112Q	CABIN ANTI-ICING CONTROL	III-14,89,201, IV-15,24,32
127	Q4114F	EQUIPMENT HEAT EXCHANGER	III-14,89,201, IV-15,24,32
128	Q4114G	EQUIPMENT COOLING TURBINE	III-14,89,201, IV-15,24,32
129	Q4114H	EJECTOR VALVE, GROUND COOL	III-14,89,201, IV-15,24,32
130	Q4114J	VALVE, TURBINE BY-PASS	III-14,89,201, IV-15,24,32
131	Q4115A	AIR FILTER, IN-LINE CADC	III-89,201, IV-15,24,32
132	Q4121F	REGULATOR, CABIN PRESSURE	III-14,90,202, IV-15,24,32
133	Q4211O	MISC RELAY PANEL NO 1	III-93,202, IV-15,24,32
134	Q4211B	WHEEL WELL SWITCH PANEL	III-27,93,203, IV-15,24,32
135	Q4212O	MISC RELAY PANEL NO. 2	III-93,203, IV-15,24,32
136	Q4213O	MISC RELAY PANEL NO. 3	III-93,204, IV-15,24,32
137	Q4214O	MISC RELAY PANEL NO. 4	III-93,204, IV-15,24,32
138	Q4215O	MISC RELAY PANEL NO. 5	III-37,93,205, IV-15,24,32
139	Q42152	MISC RELAY PANEL NO. 6	III-12,93,205, IV-15,24,32
140	Q4216O	CIRCUIT BREAKER PANEL NO. 1	III-12,93,205, IV-15,24,32

PART CROSS-REFERENCE (CONTINUED)

PART NO	WUC CODE	PART DESCRIPTION	PAGES
141	Q421DO	NOT IN WUC MANUAL	III-21,93,205, IV-15,24,32
142	Q4223O	FREQ & LOAD CONTROL BOX 693134	III-12,95,205, IV-15,24,32
143	Q4224O	FREQ & LOAD CONTROL BOX 538D888	III-12,95,205, IV-15,24,32
144	Q4233O	BATTERY, NICKEL CADMIUM	III-12,96,205, IV-15,24,32
145	Q4261O	GENERATOR, 30 KVA, 400 CYCLE 3	III-12,97,205, IV-15,24,32
146	Q426G4C	SUPERVISORY PANEL 21B30-5A	III-12,97,205, IV-15,24,32
147	Q4266O	SUPERVISORY PANEL, 21B30-3CX	III-12,97,205, IV-15,24,32
148	Q4411B	PANEL ASSEMBLY, INTERIOR COCKPIT	III-98,205, IV-15,24,32
149	Q4411G	MASTER CAUTION LIGHT	III-12,98,206, IV-15,24,32
150	Q4411K	CONTROL PANEL CAUTION LIGHT	III-98,206, IV-15,24,32
151	Q4411M	LIGHTS, COCKPIT, FLOOD	III-12,98,207, IV-15,24,32
152	Q4412A	PANEL, COCKPIT INTER. LIGHT	III-12,9[illegible],207, IV-15,24,32
153	Q4422O	FUSELAGE LIGHTS	III-12,99,207, IV-15,24,32
154	Q4423C	WING TIP TAPE LIGHTS	III-12,99,207, IV-15,24,32
155	Q4511A	RESERVOIR, HYDRAULIC NO. 1	III-17,100,207, IV-15,24,32
156	Q4511B	PUMP, HYDRAULIC (TCI) NO.1	III-17,100,207, IV-15,24,32
157	Q4511M	INDICATOR, HYDRAULIC PRESSURE	III-23,100,207, IV-15,24,32
158	Q4512A	RESERVOIR, HYDRAULIC NO.2	III-100,209 IV-15,24,32
159	Q4512B	PUMP, HYDRAULIC NO. 2	III-17,100,208, IV-15,24,32
160	Q4513A	RESERVOIR, UTILITY HYDRAULIC	III-100,208, IV-15,24,32
161	Q4513C	PUMP, HYDRAULIC (TCI) GROUP I	III-17,100,209, IV-15,24,33
162	Q4513L	HYDRAULIC FLOW REGULATOR	III-17,100,209, IV-15,24,33
163	Q4513N	PRESSURE INDICATOR, HYDRAULIC	III-23,100,209, IV-15,24,33
164	Q4513P	PRESSURE TRANSMITTER HYDRAULIC	III-23,100,209, IV-15,24,33
165	Q4521A	COMPRESSOR, HYDRAULIC DRIVEN	III-17,102,209, IV-15,24,33
166	Q4521C	SEPARATOR, MOISTURE, PNUEMATIC	III-17,102,209, IV-15,24,33
167	Q4521H	PUMP, OIL, AIR COMPRESSURE	III-17,102,209, IV-15,24,33
168	Q4624A	PYLON ASSEMBLY	III-10,105,209, IV-15,24,33

PART CROSS-REFERENCE (CONTINUED)

PART NO	WUC CODE	PART DESCRIPTION	PAGES
169	Q4631D	AIR REFUEL ACTUAT RECEPTACLE	III-17,107,209, IV-16,24,33
170	Q4631F	AIR REFUELING AMPLIFIER, IFR	III-12,107,209, IV-16,24,33
171	Q4642O	FUEL INDICATING SYSTEM	III-23,109,209, IV-16,24,33
172	Q4642D	INDICATOR, FUEL QUANTITY	III-23,109,209, IV-16,24,33
173	Q4642E	NOT IN WUC MANUAL	III-23,109,209, IV-16,25,33
174	Q4642J	SIMULATOR, FUEL QUANTITY	III-23,109,209, IV-16,25,33
175	Q471AA	CONVERTER, LIQUID OXYGEN	III-111, IV-16, 25,33
176	Q471AB	CONTAINER, LIQUID OXYGEN	III-14,111,210, IV-16,25,33
177	Q472AO	INDICATOR, OXYGEN QUANTITY	III-14,112,210, IV-16,25,33
178	Q472DO	REGULATOR, DILUTER DEMAND	III-14,112,210, IV-16,25,33
179	Q472FO	WIRE HARNESS, CONVERTER PROBE LEAD	III-14,112,210, IV-16,25,33
180	Q472GO	REGULATOR, DILUTER DEMAND	III-14,112,210, IV-16,25,33
181	Q511AA	ACCELEROMETER	III-23,114,210, IV-16,25,33
182	Q511AB	AIR SPEED AND MACH NUMBER	III-23,114,210, IV-16,25,33
183	Q511AD	VERTICAL VELOCITY	III-23,114,210, IV-16,25,33
184	Q511AE	TRUE AIR SPEED	III-23,114,210, IV-16,25,33
185	Q511AJ	ALTIMETER AAU-19 325001	III-23,114,210, IV-16,25,33
186	Q511AK	ALTIMETER AAU-19 A4132210002	III-23,114,210, IV-16,25,33
187	Q511AL	ALTIMETER AAU-19 A4132210003	III-23,114,210, IV-16,25,33
188	Q511CA	TUBE, PITOT STATIC	III-23,114,210, IV-16,25,33
189	Q512AB	COMPASS, STANDBY	III-23,115,210, IV-16,25,33
190	Q512CO	FLIGHT DIRECTOR GROUP	III-23,115,210, IV-16,25,33
191	Q512CA	COMPUTER, FLIGHT DIRECTOR	III-23,115,210, IV-16,25,33
192	Q512CG	CONTROL, ADJUSTMENT	III-23,115,210, IV-16,25,33
193	Q512CK	CONTROL MODE SELECTOR	III-23,115,210, IV-16,25,33
194	Q512CL	INDICATOR, HORIZONTAL SITUAT	III-23,115,210, IV-16,25,33
195	Q512CM	AMP, HORIZONTAL SITUAT INDIC	III-23,115,211, IV-16,25,33
196	Q513AO	GENERATOR, AURAL TONE	III-23,117,211, IV-16,25,33

PART CROSS-REFERENCE (CONTINUED)

PART NO	WUC CODE	PART DESCRIPTION	PAGES
197	Q513BO	ANGLE-OF-ATTACK TRANSMITTER	III-117,211, IV-16,25,33
198	Q513CO	AURAL STALL WARN CONTROL PANEL	III-23,117,212, IV-16,25,33
199	Q513EO	INDICATOR, ANGLE-OF-ATTACK	III-23,117,212, IV-16,25,33
200	Q513FO	INDEXER LIGHT ASSEMBLIES	III-23,117,212, IV-16,25,33
201	Q513HO	AIR DATA COMPUTER 42400-227-1	III-117,212, IV-16,25,33
202	Q513HB	STATIC PRESSURE COMPENSATOR	III-23,117,213, IV-16,25,33
203	Q513HC	PRESSURE RATIO TRANDUCER	III-23,117,213, IV-16,25,33
204	Q513HD	LOGARITHMIC PRESSURE CONTROL	III-23,117,213, IV-16,25,33
205	Q513HE	MACH SECTOR RESISTOR & CAM MOD	III-23,117,213, IV-16,25,33
206	Q513HH	COMPUTER AMPLIFIER	III-23,117,213, IV-16,25,33
207	Q513XO	ALTITUDE ENCODER UNIT	III-117,213, IV-16,25,33
208	Q52110	AILERON-RUDDER INTERCONN	III-21,119,214, IV-16,25,33
209	Q52211A	ARI AMPLIFIER, AUTO FLIGHT CONTROL	III-21,119,214, IV-16,25,33
210	Q52240	AIRCRAFT ACCELEROMETER	III-21,120,214, IV-16,25,33
211	Q52250	AIRCRAFT ACCELEROMETER (LATERAL)	III-120,214, IV-16,25,33
212	Q52270	RATE GYRO (ROLL)	III-120,215, IV-16,25,33
213	Q52280	RATE GYRO (YAW)	III-120,215, IV-16,25,33
214	Q522AO	CONTROLLER, ENGAGING, AUTO PILOT	III-120,216, IV-16,25,33
215	Q522BO	TRANSDUCER, MOTIONAL PICK UP	III-120,216, IV-16,25,33
216	Q522EO	AMPLIFIER, CONTROL	III-120,217, IV-16,25,33
217	Q522EB	AMPLIFIER, SERVO, YAW	III-120,217, IV-16,25,34
218	Q522EC	AMP, SERVO ROLL RIGHT	III-21,120,218, IV-16,25,34
219	Q522EQ	SYNC DRIVE, PITCH, TWO SPEED	III-120,218, IV-16,25,34
220	Q5511A	RECORDER, (VEL, GRAV, HGT)	III-23,121,219, IV-16,25,34
221	Q5511C	MAGAZINE, (VEL, GRAV, HGT)	III-23,121,219, IV-16,25,34
222	Q5515A	INDICATOR, STATISTICAL ACCELER	III-23,121,219, IV-16,25,34
223	Q5515B	TRANSDUCER, STATIST ACCELER	III-23,121,219, IV-16,25,34
224	Q5528O	NOT IN WUC MANUAL	III-41,122,219, IV-16,25,34

PART CROSS-REFERENCE (CONTINUED)

PART NO	WUC CODE	PART DESCRIPTION	PAGES
225	Q552C0	NOT IN WUC MANUAL	III-41,122,219, IV-16,25,34
226	Q6330C	NOT IN WUC MANUAL	III-27,123,219, IV-17,25,34
227	Q6331C	NOT IN WUC MANUAL	III-27,123,219, IV-17,25,34
228	Q6331C	NOT IN WUC MANUAL	III-27,123,220, IV-17,25,34
229	Q6331H	NOT IN WUC MANUAL	III-27,123,220, IV-17,25,34
230	Q6331J	NOT IN WUC MANUAL	III-27,123,220, IV-17,25,34
231	Q6331N	NOT IN WUC MANUAL	III-123,220, IV-17,26,34
232	Q6335C	NOT IN WUC MANUAL	III-123,221, IV-17,26,34
233	Q6335A	NOT IN WUC MANUAL	III-123,221, IV-17,26,34
234	Q6335C	NOT IN WUC MANUAL	III-27,123,222, IV-17,26,34
235	Q71310	RECEIVER, R-2032/ARN-127	III-124,222, IV-17,26,34
236	Q71320	CONTROL, C10124/ARN-127	III-29,124,223, IV-17,26,34
237	Q71350	INDICATOR, ILS (AFT COCKPIT)	III-124,223, IV-17,26,34
238	Q71B10	CONTROL COMPUTER CP723B/ASN	III-33,125,224, IV-17,26,34
240	Q71B2A	AMPLIFIER A803, A804, A806	III-33,125,225, IV-17,26,34
241	Q71B2C	PREAMPLIFIER A807	III-33,125,225, IV-17,26,34
242	Q71B2E	RANGE COMPUTER MECH A810	III-33,125,225, IV-17,26,34
243	Q71B30	INDICATOR, GROUND SPEED	III-33,125,225, IV-17,26,34
244	Q71H10	CONTROL PANEL C-4779/ASN	III-33,126,225, IV-17,26,34
245	Q71H20	COMPUTER, NAVIGATIONAL	III-33,126,225, IV-17,26,34
246	Q71H2A	ELECTRONIC SUBASSEMBLY	III-33,126,225, IV-17,26,34
247	Q71H3N	DC AMPLIFIER	III-33,126,225, IV-17,26,34
248	Q71H3U	SUMMING AMPLIFIER	III-33,126,225, IV-17,26,34
249	Q71H4A	GYRO TEMPERATURE CONTROL	III-33,126,225, IV-17,26,34
250	Q71H4F	OVEN COMPONENTS & ELEC ASSEMBLY	III-33,126,225, IV-17,26,34
251	Q71H4L	POWER SUPPLY A25	III-33,126,225, IV-17,26,34
252	Q71H4R	INTEGRATOR SHAFT A24	III-33,126,225, IV-17,26,34
254	Q71H50	DISTRIBUTION UNIT, OUTPUT SIGNAL	III-33,126,225, IV-17,26,34

PART CROSS-REFERENCE (CONTINUED)

PART NO	WUC CODE	PART DESCRIPTION	PAGES
255	Q71H5A	SERVO, TRUE HEADING A1	III-33,126,225, IV-17,26,34
256	Q71H6O	PLATFORM, GYRO STABILIZED	III-33,126,225, IV-17,26,34
257	Q71H6E	GYROSCOPE (UPPER)	III-33,126,225, IV-17,26,34
258	Q71LEO	AMPLIFIER, POWER SUPPLY REC AM-2349	III-128,225, IV-17,26,34
259	Q71LJO	BEARING DISTANCE HEADING INDICATOR	III-128,226, IV-17,26,34
260	Q71LMO	INDICATOR, BEARING, DISTANCE	III-27,128,226, IV-17,26,34
261	Q71LQA	ANTENNA, ADF, AS-909/ARA-48	III-128,227, IV-17,26,34
262	Q71LWO	MIKE ADAPTER ASSEMBLY	III-27,128,227, IV-17,26,34
263	Q71LXO	HEADSET/MICROPHONE CORD, COCKPIT,	III-128,228, IV-17,26,34
264	Q71MDO	NOT IN WUC MANUAL	III-27,129,228, IV-17,26,34
265	Q71MEO	NOT IN WUC MANUAL	III-129,229, IV-17,26,34
266	Q71MGO	CONTROL, C-6280/APX TRANS	III-29,129,229, IV-17,26,34
267	Q71MHO	INTERCOMMUNICATION STATION	III-129,230, IV-17,26,34
268	Q71SOO	INTERROGATOR SET AN/APX-76	III-29,132,230, IV-17,26,34
269	Q71SBO	RECEIVER-TRANSMITTER, RADIO (UNIT 2)	III-132,231, IV-17,26,34
270	Q71SBG	TRANSMITTER ASSEMBLY 2A2	III-29,132,231, IV-17,26,34
271	Q71SCO	SWITCH AMPLIFIER (UNIT 3)	III-132,232, IV-17,26,34
272	Q71SDO	SYNCHRONIZER SN-416A/APX-76	III-29,132,232, IV-17,26,34
273	Q71ZOO	AN/ARN-118 TACAN SYSTEM	III-29,134,232, IV-17,26,34
274	Q71ZAC	RECEIVING TRANSMITER RT-1159/A	III-135,233, IV-17,26,35
275	Q71ZBO	ADAPTER MX9577/A OR MX-10070	III-29,135,233, IV-17,26,35
276	Q71ZCO	MOUNT (REC/TRANS)	III-135,234, IV-17,26,35
277	Q71ZDO	CONTROL UNIT C-10062/A	III-135,234, IV-17,26,35
278	Q71ZEO	MOUNT (DIGITAL TO ANALOG)	III-29,135,235, IV-17,26,35
279	Q72300	RADAR ALTIMETER, AN/APN-155	III-29,136,235, IV-17,26,35
280	Q723AO	RECEIVER-TRANSMITTER RT-689	III-136,235, IV-17,26,35
281	Q723AQ	VARIABLE CAPACITY OSCILLATOR	III-29,136,236, IV-17,26,35
282	Q723BO	INDICATOR, HEIGHT, ID-1090	III-136,236, IV-17,26,35

PART CROSS-REFERENCE (CONTINUED)

PART NO	WUC CODE	PART DESCRIPTION	PAGES
283	Q723CO	ANTENNA, RECEIVER AS-1386	III-29,136,237, IV-17,26,35
284	Q723DO	ANTENNA, TRANSMITTER AS-1442	III-29,136,237, IV-18,26,35
286	Q731OO	ATTITUDE REFER BOMB COMPUTER	III-23,138,238, IV-18,26,35
287	Q731BO	AMPLIFIER POWER SUPPLY	III-138,238, IV-18,26,35
288	Q731CO	ADAPTER COMPENSATOR COMPASS	III-23,138,239, IV-18,26,35
289	Q731CA	SYNCRO ASSEMBLY	III-23,138,239, IV-18,26,35
290	Q731DO	COMPUTER, BOMB RELEASE ANGLE	III-23,138,239, IV-18,27,35
291	Q731EO	COMPUTER, BOMBING FLIGHT DIRECTOR	III-138,239, IV-18,27,35
292	Q731FO	CONTROLLER COMPASS, C4781/AUB7	III-23,138,240, IV-18,27,35
293	Q731GO	DISPLACEMENT GYRO	III-138,240, IV-18,27,35
294	Q731HO	INDICATOR, ATTITUDE REFERENCE	III-23,138,241, IV-18,27,35
295	Q73AKO	GYROSCOPE, RATE SWITCHING MC-1	III-23,138,241, IV-18,27,35
296	Q731MO	DUAL TIMER MS27264	III-23,138,241, IV-18,27,35
297	Q731NO	REMOTE ATTITUDE INDICATOR, ARU-13A	III-138,241, IV-18,27,35
298	Q732AO	INDICATOR, STANDBY, VERT REFER	III-23,140,242, IV-18,27,35
299	Q732CO	PANEL ASSY, STANDBY INVERTER	III-23,140,242, IV-18,27,35
300	Q73510	CONTROL, COMPUTER CURSOR	III-33,141,242, IV-18,27,35
301	Q73520	COMPUTER CONTROL C-6460	III-33,141,242, IV-18,27,35
302	Q73530	BALLISTICS COMPUTER	III-33,141,242, IV-18,27,35
303	Q73526	NOT IN WUC MANUAL	III-33,141,242, IV-18,27,35
304	Q7253H	CROSS TRACK RANGE SERVOMECHANISM	III-33,141,242, IV-18,27,35
305	Q7353V	DIRECT CURRENT AMPLIFIER	III-33,141,242, IV-18,27,35
306	Q73540	COMPUTER CONTROL ASSEMBLY	III-33,141,242, IV-18,27,35
307	Q73560	WEAPON DELIVERY PANEL	III-33,141,242, IV-18,27,35
308	Q73GOO	DIGITAL MODULAR AVIONICS SYSTEM	III-33,142,242, IV-18,27,35
309	Q73GAO	NAVIGATION COMPUTER CP-1314/A	III-33,142,242, IV-18,27,35
310	Q73GBO	LORAN RECEIVER R-1960/A	III-33,142,242, IV-18,27,35
311	Q73GCO	KEYER CONTROL C-9474	III-33,142,242, IV-18,27,35

PART CROSS-REFERENCE (CONTINUED)

PART NO	WUC CODE	PART DESCRIPTION	PAGES
312	Q73GDO	SIGNAL DATA CONVERTER	III-33,142,242, IV-18,27,35
313	Q73GEO	POWER SUPPLY PP-7428/A	III-33,142,242, IV-18,27,35
314	Q73GFO	DIGITAL DISPLAY INDICATOR	III-33,142,242, IV-18,27,35
315	Q73GHO	NAVIGATIONAL COMPUTER SET CONTROL	III-33,142,242, IV-18,27,35
316	Q73GHA	CIRCUIT CARD ASSEMBLY	III-33,142,242, IV-18,27,35
317	Q73GNO	INERTIAL MEASURE UNIT BUFF	III-33,142,242, IV-18,27,35
318	Q73BPO	INERTIAL MEASURE UNIT	III-33,142,242, IV-18,27,35
319	Q73GQO	NOT IN WUC MANUAL	III-33,142,242, IV-18,27,35
320	Q74810	GYROSCOPE, LEAD COMPUTING	III-35,144,242, IV-18,27,35
321	Q74830	NOT IN WUC MANUAL	III-144,243, IV-18,27,35
322	Q74840	OPTICAL DISPLAY UNIT SU-40/ASG-26A	III-35,144,243, IV-18,27,35
325	Q7492C	NOT IN WUC MANUAL	III-35,145,146, 244, IV-18,27,35
326	Q74BAO	POWER SUPPLY PP-4848	III-35,146,146, 245, IV-18,27,35
327	Q74BBO	CONTROL-OSCILLATOR C-7349 (LRU-18)	III-35,146,245, IV-18,27,35
328	Q74BCO	SYNCHRONIZER, ELECTRONIC (LRU-17)	III-35,146,245, IV-18,27,35
329	Q74BDO	COMPUTER, TARGET INTERCEPT (LRU-1)	III-35,146,245, IV-18,27,35
330	Q74BEO	POWER SUPPLY PP-4847	III-35,146,245, IV-18,27,35
331	Q74BFO	TRANSMITTER, RADAR T-1050 (LRU-5)	III-146,246, IV-18,27,36
332	Q74BGO	MODULATOR-OSCILLATOR MD-735 (LRU-3)	III-35,146,246, IV-18,27,36
333	Q74BHO	NOT IN WUC MANUAL	III-35,146,246, IV-18,27,36
334	Q74BJO	CONTROL, ANTENNA C-7348 (LRU-7)	III-146,247, IV-18,27,36
335	Q74BKO	OSCILLATOR, R-F C-1430A (LRU-21)	III-35,146,247, IV-18,27,36
336	Q74BLO	STABILIZER ASSY MX-7781 (LRU-4)	III-35,146,247, IV-18,27,36
337	Q74BMO	NOT IN WUC MANUAL	III-35,146,247, IV-18,27,36
338	Q74BNO	NOT IN WUC MANUAL	III-35,146,247, IV-18,27,36
339	Q74BPO	WAVE GUIDE ASSEMBLY CG-3365	III-35,146,247, IV-18,27,36
340	Q74BQO	INDICATOR, INTRA TARGET (LRU-13)	III-35,146,247, IV-18,27,36
341	Q74BSO	CONTROL, RADAR SET (LRU-9)	III-146,248, IV-18,27,36

PART CROSS-REFERENCE (CONTINUED)

PART NO	WUC CODE	PART DESCRIPTION	PAGES
342	Q74BTO	CONTROL-MONITOR (LRU-8)	III-35,146,248, IV-19,27,36
343	Q74BUO	INDICATOR, CONTROL C-7347 (LRU-11)	III-35,146,248, IV-19,19,27,27, 36,36
344	Q74BVO	ANTENNA AS-2072A (LRU-16)	III-35,146,249, IV-19,27,36
345	Q74BWO	RACK, ELECT EQUIP MT-3868 (LRU-14)	III-35,146,249, IV-19,27,36
346	Q74BXO	CABLE, ASSY CX-10548 (LRU-15)	III-35,146,249, IV-19,27,36
347	Q74C2O	NOT IN WUC MANUAL	III-35,148,249, IV-19,27,36
348	Q74CAO	INDICATOR CONTROL UNIT DSCG (LRU-11)	III-148,250, IV-19,27,36
349	Q74CBO	INDICATOR AZ, EL, & RANGE (LRU-12)	III-148,250, IV-19,28,36
350	Q74CCO	INDICATOR AZ, EL, & RANGE (LRU-13)	III-35,148,251, IV-19,28,36
351	Q74FAO	TG-213/A TUNING DRIVE	III-35,149,251, IV-19,28,36
352	Q74KAO	NOT IN WUC MANUAL	III-35,150,251, IV-19,28,36
359	Q7519Q	NOT IN WUC MANUAL	III-37,151,254, IV-19,28,36
360	Q75310	MULTIPLE EJECTOR RACK CENTERLINE	III-152,254, IV-19,28,36
361	Q7531C	SENSING SWITCH	III-37,152,255, IV-19,28,36
362	Q75320	TRIPLE EJECTION RACK	III-37,152,255, IV-19,28,36
363	Q75600	MISSILE FIRING CIRCUITS	III-37,153,255, IV-19,28,36
364	Q7561A	AUX ARMAMENT CONTROL PANEL	III-37,153,255, IV-19,28,36
365	Q7561B	L-H SIDEWINDER MISSILE ASSEMBLY	III-37,153,255, IV-19,28,36
366	Q7561C	R-H SIDEWINDER MISSILE ASSEMBLY	III-37,153,255, IV-19,28,36
367	Q7561F	MISSILE FIRING RELAY PANEL	III-37,153,255, IV-19,28,36
368	Q7561L	ARMAMENT RELAY PANEL ASSEMBLY	III-37,153,255, IV-19,28,36
369	Q75930	STATION SELECTOR SWITCH	III-37,155,255, IV-19,28,36
370	Q7591K	WIRE HARNESSS, MULTIPLE WEAPON	III-37,155,255, IV-19,28,36
371	Q75930	INTERVALOMETER, P/N	III-37,155,255, IV-19,28,36
372	Q75950	WEAPONS RELEASE CONTROL, C8977/A	III-155,255, IV-19,28,36
373	Q75E00	GUN, PALLETIZED INTERNAL	III-37,156,256, IV-19,28,36
374	Q75E1A	AMMUNITION DRUM	III-37,156,256, IV-19,28,36
375	Q75E1C	EXIT UNIT	III-37,156,256, IV-19,28,36

PART CROSS-REFERENCE (CONTINUED)

PART NO	WUC CODE	PART DESCRIPTION	PAGES
376	Q75E1D	UNLOADER UNIT	III-37,156,256, IV-19,28,36
377	Q75E1E	FEEDER UNIT	III-37,156,256, IV-19,28,36
378	Q75E1F	DRIVE, HYDRAULIC, GUN PALLET	III-17,156,256, IV-19,28,36
379	Q75E1J	FILTER HYDRAULIC, GUN PALLET	III-17,156,256, IV-19,28,36
380	Q75E1N	PURGE ASSEMBLY	III-37,156,256, IV-19,28,36
381	Q75E1X	DRIVE ASSEMBLY	III-37,156,256, IV-19,28,36
382	Q75E2O	GUN, INTERNAL 20 MM	III-37,156,256, IV-19,28,36
383	Q75E2C	CONTACT ASSEMBLY FIRING	III-37,156,256, IV-19,28,36
384	Q75E2F	BARREL SET,GUN	III-37,156,256, IV-19,28,36
385	Q75E2G	SOLENOID CLEARING	III-37,156,256, IV-19,28,36
386	Q765OO	AN/ALE-40 CHAFF/FLARE DISPENSER	III-31,158,256, IV-19,28,36
387	Q765AO	CHAFF/FLARE PROGRAMMER	III-31,158,256, IV-19,28,36
388	Q765AA	CHAFF MODULE ASSEMBLY	III-31,158,256, IV-19,28,36
389	Q765BO	SEQUENCE SWITCH ASSEMBLY	III-31,158,256, IV-19,28,36
390	Q765BA	DRIVER PCB	III-31,158,256, IV-19,28,36
391	Q765CO	SLAVE DISPENSER 134025-0001	III-31,158,256, IV-19,28,36
392	Q765DO	CHAFF PAYLOAD MODULE 133896	III-31,158,256, IV-19,28,36
393	Q765HO	MASTER DISPENSER 1340001-0001	III-31,158,256, IV-19,28,37
394	Q765HB	CABLE ASSEMBLY 1333882-0002	III-31,158,256, IV-19,28,37
395	Q765JO	COCKPIT CONTROL UNIT	III-31,158,256, IV-19,28,37
396	Q76G99	NOC	III-31,160,256, IV-19,28,37
397	Q76GAO	SIGNAL PROCESSOR	III-31,160,256, IV-19,28,37
398	Q76GAB	READ ONLY MEMORY A2	III-31,160,256, IV-19,28,37
399	Q76GAD	DISPLAY DRIVER	III-31,160,256, IV-19,28,37
400	Q76GAE	VIDEO PROCESSOR A5	III-31,160,256, IV-19,28,37
401	Q76GAF	CPU A6	III-31,160,256, IV-19,28,37
402	Q76GBO	RECEIVER (R1854A)	III-31,160,256, IV-19,28,37
403	Q76GCO	AMPLIFIER DETECTOR	III-31,160,256, IV-19,28,37

PART CROSS-REFERENCE (CONTINUED)

PART NO	WUC CODE	PART DESCRIPTION	PAGES
404	Q76GCA	TRIPLEXER/LIMITER DETECTOR	III-31,160,256, IV-19,28,37
405	Q76GCC	VIDEO AMPLIFIER A2, A4	III-31,160,256, IV-20,28,37
406	Q76GCD	REGULATOR A7	III-31,160,256, IV-20,28,37
407	Q76GDO	INDICATOR CONTROL (TDU)	III-31,160,256, IV-20,28,37
408	Q76GEO	AZIMUTH INDICATOR	III-31,160,256, IV-20,28,37
409	Q77J1O	EXPOSURE FREQUENCY CONTROL	III-41,165,256, IV-20,28,37
410	Q77J2A	PERISCOPE, DRS, LD-70A	III-41,165,256, IV-20,28,37
411	Q77J2K	KD-42A CAMERA	III-41,165,256, IV-20,28,37
412	Q77X6O	KB-25A CAMERA	III-41,166,256, IV-20,28,37
413	Q9321A	CONTAINER, STORAGE SYSTEM	III-168,257, IV-20,29,37
414	Q93217	DOOR 107	III-10,168,257, IV-20,29,37
576	Q4631C	VALVE, RECEPTACLE SELECTOR	III-172,257, IV-20,29,37
578	Q7511O	AERO 3B LAUNCHER	III-173,258, IV-20,29,37
579	Q7513O	AERO -7A	III-173,258, IV-20,29,37
580	Q7514O	AERO-27A/BRU-5A	III-173,258, IV-20,29,37
581	Q7514A	NOT IN WUC MANUAL	III-173,258, IV-20,29,37
582	Q7514C	BREECH ASSEMBLY	III-173,258, IV-20,29,37
583	Q7514D	PISTON ASSEMBLY	III-173,258, IV-20,29,37
584	Q7515O	LAU-7A/A LAUNCHER	III-173,258, IV-20,29,37
585	Q7515C	MECHANISM ASSEMBLY	III-173,258, IV-20,29,37
586	Q7517O	LAU-34/A TYPES LAUNCHER	III-173,258, IV-20,29,37
587	Q751CO	ARMAMENT PYLONS	III-173,258, IV-20,29,37
588	Q751CA	PYLON, INBOARD ARMAMENT, R-H	III-173,259, IV-20,29,37
589	Q751CB	PYLON, OUTBOARD ARMAMENT, L-H	III-173,259, IV-20,29,37
590	Q751CC	PYLON, OUTBOARD ARMAMENT, R-H	III-173,260, IV-20,29,37
591	Q751CD	PYLON, INBOARD ARMAMENT, L-H	III-173,260, IV-20,29,37
592	Q751DO	MAU-12A BOMB RACK	III-173,261, IV-20,29,37
593	Q751NO	SUU-20/A ROCKET/BOMB DISPENSER	III-173,261, IV-20,29,37

PART CROSS-REFERENCE (CONTINUED)

PART NO	WUC CODE	PART DESCRIPTION	PAGES
594	Q751ND	BOMB INTERVALOMETER	III-173,262, IV-20,29,37
595	Q751QO	LAU-88 LAUNCHER	III-173,262, IV-20,29,37
596	Q751SO	NOT IN WUC MANUAL	III-173,262, IV-20,29,37
597	Q76BOO	NOT IN WUC MANUAL	III-176,262, IV-20,29,37
598	Q76BAO	NOT IN WUC MANUAL	III-176,262, IV-20,29,37
599	Q76BAA	NOT IN WUC MANUAL	III-176,262, IV-20,29,37
600	Q76BAA	NOT IN WUC MANUAL	III-176,262, IV-20,29,37
601	Q76BBO	NOT IN WUC MANUAL	III-176,263, IV-20,29,37,
602	Q76BCO	NOT IN WUC MANUAL	III-176,263, IV-20,29,37
603	Q76BDO	NOT IN WUC MANUAL	III-176,263, IV-20,29,37
604	Q76BEO	NOT IN WUC MANUAL	III-176,263, IV-20,29,37
605	Q76BFO	NOT IN WUC MANUAL	III-176,264, IV-20,29,37
606	Q76BHO	NOT IN WUC MANUAL	III-176,264, IV-20,29,37
607	Q76BKO	NOT IN WUC MANUAL	III-176,264, IV-20,29,37
608	Q76BLO	NOT IN WUC MANUAL	III-176,264, IV-20,29,37
609	Q76BMO	NOT IN WUC MANUAL	III-176,264, IV-20,29,37
610	Q76BNO	NOT IN WUC MANUAL	III-176,264, IV-20,29,38
611	Q76BRO	NOT IN WUC MANUAL	III-176,264, IV-20,29,38
612	Q76BSO	NOT IN WUC MANUAL	III-176, IV-20, 29,38,
613	Q76BUO	NOT IN WUC MANUAL	III-176,265, IV-20,29,38
614	Q76BVO	NOT IN WUC MANUAL	III-176,265, IV-20,29,38
616	Q76BYO	NOT IN WUC MANUAL	III-176,265, IV-20,29,38
638	Q23000	BASIC J79 TURBO JET ENGINE	III-178,266, IV-20,29,38
639	Q2353R	AMPLIFIER,TEMP CONTROL	III-178, IV-20, 29,38
640	Q2394A	TRANSMITTER, FUEL FLOW	III-178, IV-20, 29,38
641	Q2373D	RING, SEAL, MATING	IV-20,29,38
642	Q2396O	ENGINE CONTROLS	IV-20,29,38
643	Q2381A	STARTER, CARTRIDGE/PNEUMATIC	IV-20,29,38
644	Q2392A	INDICATOR, EXHAUST TEMPERATURE	III-178, IV-21, 29,38
645	Q2361L	MAINIFOLD, FUEL INLET	IV-21,29,38
646	Q2361C	ACTUATOR, ROTARY	IV-21,29,38

PART CROSS-REFERENCE (CONTINUED)

PART NO	WUC CODE	PART DESCRIPTION	PAGES
647	Q2362A	FUEL PUMP, AFTERBURNER	IV-21,29,38
648	Q2397A	VALVE, ANTI-ICING AIR	IV-21,29,38
649	Q2391B	TACHOMETER	III-178, IV-21, 29,38
659	Q2361D	MAIN FUEL PUMP	III-266, IV-21, 29,38
660	Q2361B	CONTROL,MAIN FUEL	III-266, IV-21, 29,38
661	Q2362V	HOSE, AFTERBURNER FUEL PUMP	III-266, IV-21, 29,38
662	Q2362C	CONTROL,FUEL, AFTERBURNER	III-266, IV-21, 29,38
663	Q2393B	INDICATOR, OIL PRESSURE	III-266, IV-21, 29,38
664	Q2395A	INDICATOR, NOZZLE POSITION	III-266, IV-21, 29,38
665	Q2395B	TRANSMITTER, NOZZLE POSITION	III-266, IV-21, 29,38
666	Q23312	CASING ASSEMBLY, INNER	III-266, IV-21, 29,38
667	Q23110	GEARBOX ASSEMBLY, FRONT	III-266, IV-21, 29,38
668	Q23140	GEARBOX ASSEMBLY, REAR	III-267, IV-21, 29,38
669	Q23220	STATOR ASSEMBLY	III-267, IV-21, 29,38
670	Q23230	ROTOR ASSEMBLY	III-267, IV-21, 29,38
671	Q23420	ROTOR AND SEAL, TURBINE	III-267, IV-21, 29,38
672	Q23430	FRAME ASSEMBLY, TURBINE	III-267, IV-21, 29,38
681	Q1325D	MAIN LANDING GEAR TIRE (LEFT)	III-50, IV-21,29,38
682	Q1326B	MAIN LANDING GEAR TIRE (RIGHT)	III-50, IV-21,29,38

END

DTIC

8-86