AD-A166 956 HIGH CONCENTRATION STANDARD AEROSOL GENERATOR(U) 1/1
SOUTHERN RESEARCH INST BIRMINGHAM AL
W E FARTHING ET AL. 31 JUL 85 SORI-EAS-85-724
UNCLASSIFIED DAAK11-83-C-0038 F/G 13/7 NL

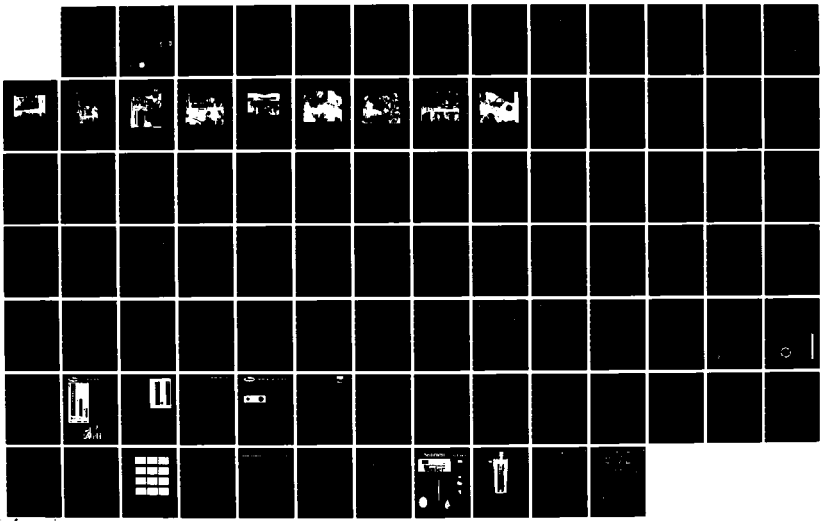

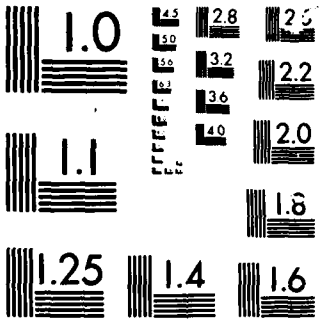

MICROCOPY CHART

(2)

SoRI-EAS-85-724

HIGH CONCENTRATION STANDARD AEROSOL GENERATOR

Final Comprehensive Report

Prepared for the
U.S. Army Armament Research and Development Command
Chemical/Ballistics Procurement Division
Aberdeen Proving Ground
Edgewood Area, Maryland 21010

APPROVED FOR PUBLIC RELEASE
DISTRIBUTION IS UNLIMITED

Southern Research Institute

SoRI-EAS-85-724

Final Comprehensive Report

HIGH CONCENTRATION STANDARD AEROSOL GENERATOR

William E. Farthing
Randal S. Martin

Southern Research Institute
2000 Ninth Avenue South
P.O. Box 55305
Birmingham, AL 35255-5305

July 31, 1985

Contract DAAK11-83-C-0038
A002 Final Comprehensive Report

Project Officer: Dr. Jerry Bottiger
Obscuration Sciences Section

Prepared for
U.S. Army Armament Research and Development Command
Chemical/Ballistics Procurement Division
Aberdeen Proving Ground
Edgewood Area, Maryland 21010

Project #5335

CONTENTS

I. Introduction

For aerosol research and testing it is important to have aerosols available with known and controllable properties. Particle size distribution is always an important parameter; frequently, a narrow size distribution is needed. For many investigations high concentration is the major consideration; sometimes this is coupled with the need for high flowrates. Under this contract Southern Research Institute (SoRI) has developed the High Concentration Standard Aerosol Generator (HCSAG) system with novel and frequently needed capabilities: high concentration, high flowrate, narrow size distribution, and particle size greater than 1 micron.

To create uniformly sized particles the generation mechanism must be very strictly controlled. To obtain a monodisperse aerosol by mechanical agitation such techniques as the vibrating orifice or oscillating reed are utilized. A liquid jet is segmented at regular intervals to produce droplets of the same volume. For each jet velocity and diameter the frequency of agitation must be tuned very accurately to prevent the formation of multiple sizes. The generation rate is limited to the order of 10^5 per second.[1,2] To obtain a monodisperse aerosol by condensation techniques, the thermodynamic properties of the flowstream must be maintained within in a narrow range while the aerosol is being cooled. This requirement is increasingly difficult to achieve as the desired particle rate (the product of concentration and flowrate) and particle size increase. Available generators of this type have low flowrates and are practically limited to small sizes.[3,4]

An alternate approach for obtaining a narrow size distribution is to use a polydisperse aerosol generator followed by devices which separate the desired particle size from the larger and smaller sizes. This is the approach upon which the HCSAG is based. Classical impactors are used to separate the large particles from an aerosol stream and virtual impactors are used to remove the small particles.

This report describes the development of the HCSAG and serves as the instrument manual for the instrument. Section II (Operating Principle) gives the design criteria as well as describing the basic mechanisms upon which the HCSAG is based. Section III (Description of HCSAG) describes the actual components. Section IV (Performance Evaluation) presents aerosol data obtained during the course of developing the instrument. Section V (Operating Instructions) gives procedures for operating the HCSAG and Section VI (Maintenance) describes the procedures recommended to keep the components in good working condition. Section VII (Recommendations for Extending Performance) suggests procedures by which the system output could be modified to be more appropriate for given circumstances. These modifications include 1) increasing the concentration (if a lower flow or a wider size distribution is acceptable and 2) precautions and suggestions for use of different aerosol materials. Additional details of the system (including shop drawings, list lists of materials, and maintenance of commercially available components) are given in Appendices A and B and are referred to in the text of this report.

Since several components and operating parameters of this system represent extensions of the technology, significant effort has gone into reporting and analyzing data in a general form to promote understanding of the mechanisms involved.

II. Operating Principle

A. Design Criteria

The design criteria for the system required that aerosol produced by the HCSAG have a narrow size distribution in the range of 1 to 3 microns and that the concentration be high enough at a flowrate as high as 140 lpm to produce significant reduction in the transmittance of visible light over a 4 meter pathlength. The transmittance criterion corresponds to a concentration of at least 10^4 particles per cm^3 for a particle diameter of 2 microns.

B. General Description of System

Figure II-1 gives a block diagram of the fundamental components of the system. Compressed air feeds about 425 slpm (Q_{GEN}) to a polydisperse aerosol generator (PAG) consisting of 6 Laskin nozzles. Aerosol from the PAG passes through two virtual impactors (VP1 and VP2) to the primary device (VP3) for removal of the small size fraction. The major purpose of VP1 and VP2 is to concentrate the primary aerosol stream by reducing the volume flowrate without discarding a proportionate fraction of the particles of interest. The flow split in both VP1 and VP2 is 10% so that 4 slpm exits through the token flow Q_{2T} of VP2. A venturi is utilized to accurately adjust and monitor Q_{2T}.

VP3 is a novel virtual impactor in which a core of clean air, Q_{CORE} is introduced at the center of the aerosol stream before entering the impactor jet[5], illustrated in Figure II-2. All of the token flow, Q_{3T}, is comprised of air from this clean core. Only particles with inertia large enough to penetrate into this token flow are thus retained. Retention of small particles in the primary aerosol stream, Q_{3T}, is far below that which can be achieved with traditional virtual impactors. Clean sheath air Q_{SH} is also utilized to produce a sharper retention (or collection) efficiency than would otherwise occur[5]; wall losses are probably reduced also. Figure II-3 presents results of empirical investigations of both types of virtual impactors. Masuda,et al[5] identified limits on the proportions of Q_{CORE}, Q_{2T}, and Q_{SH}:

$$Q/Q_{2T} \geq 1.43 \quad \text{and}$$

$$Q_{CORE}/Q_{2T} \geq 0.8 \frac{Q}{Q_{2T}} - 1$$

where Q is the total flowrate. This device, referred to as the Hochrainer virtual impactor after one of its developers and the current supplier, was tested in the original investigation at total flowrates from 5 to 30 lpm.

Referring back to Figure II-1, upon exiting VP3 the aerosol stream (Q_{3T}=3 lpm) enters the outlet impactor (OP) for removal of the large particles. OP is a classical impactor except that sheath air is added prior to the jet to maintain the desired size cut and reduce wall losses. The primary aerosol stream exits the system through a pressure let-down orifice (PLDO). This component is necessary because of the significant pressure head across the system which is necessary to establish the desired cutpoints around 1.5 μm.

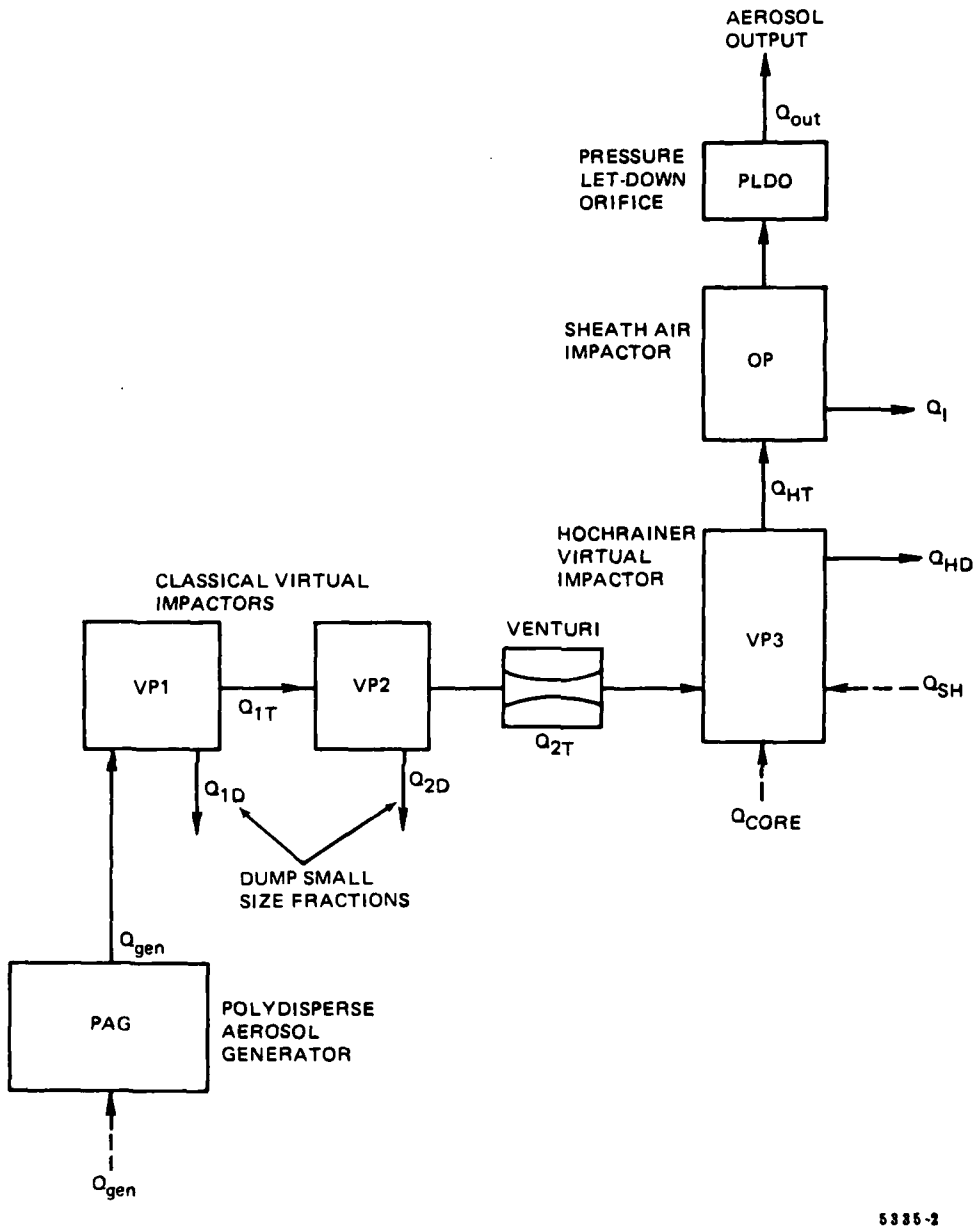

Figure II-1. Block diagram of HCSAG.

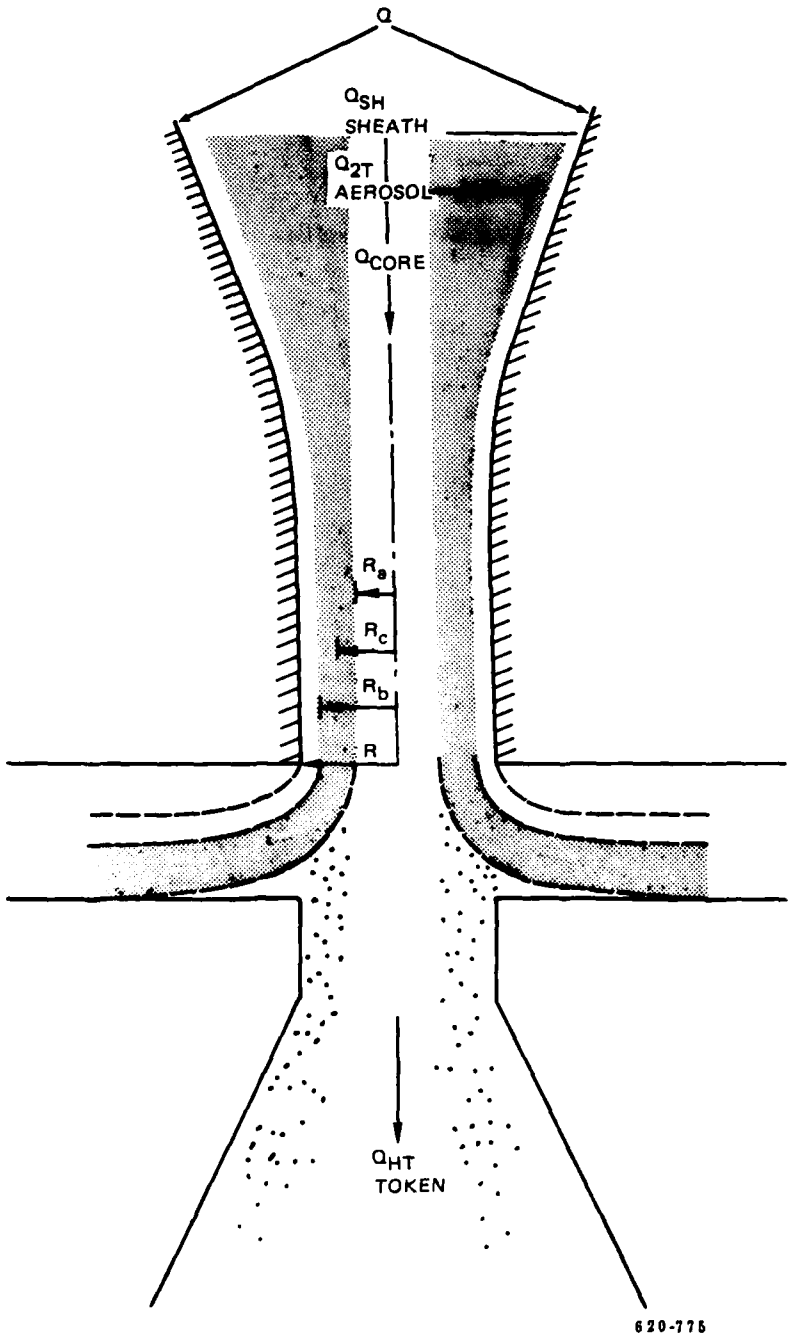

Figure II-2. Illustration of annular aerosol flow and particle separation characteristics of Masuda, et al.[5] impactor.

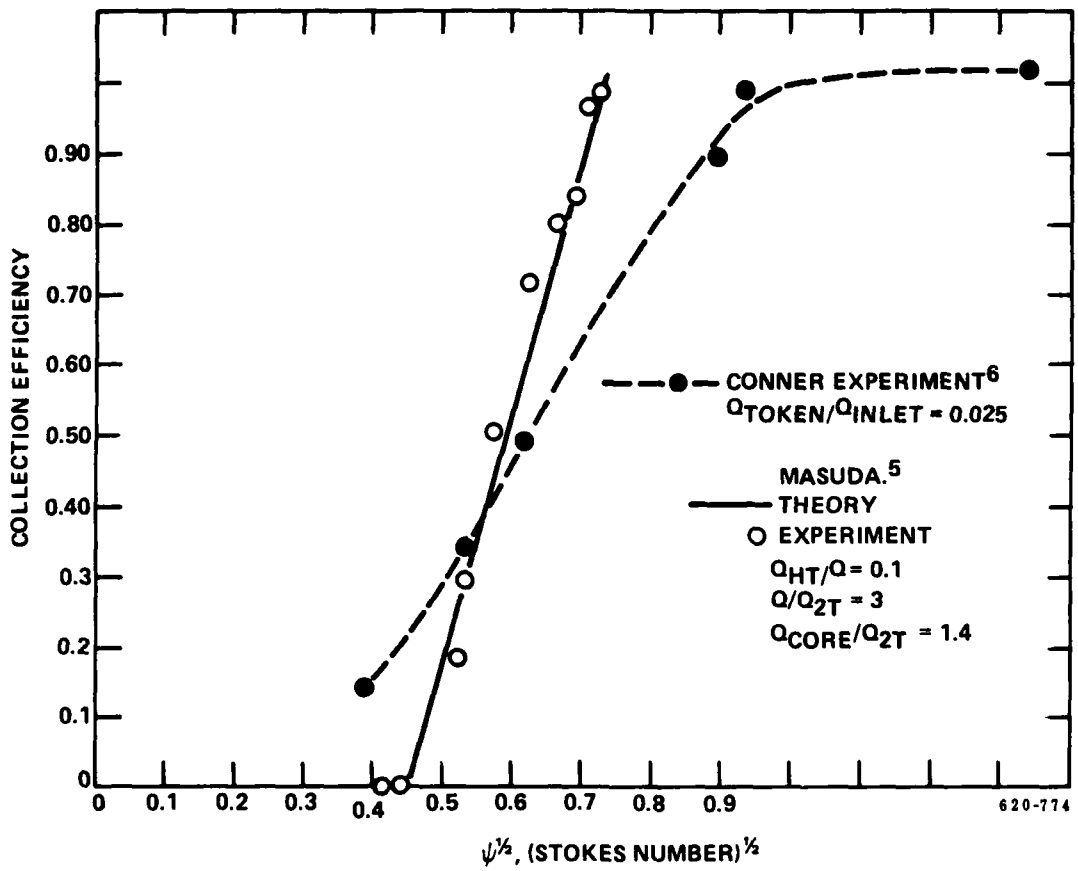

Figure II-3. Efficiency of virtual impactors versus $\sqrt{\psi}$. See Figure II-2. for explanation of Q's. After Conner[6] and Masuda, et al.[5]

III. Detailed Description of HCSAG

In this section the HCSAG is described in further detail using drawings and photographs so that the user can identify the actual components, their function, and the valves and meters for adjustment and monitoring of operation. Appendix A (Shop Drawings of Noncommercial Components) and Appendix B (Maintenance Instructions of Commercially Available Components) give additional information. Figure III-1 is a schematic drawing of the HCSAG. Figures III-2 through III-11 are photographs showing various views of the system. Figure III-12 is an assembly drawing of the Hochrainer impactor.

A. Air and Liquid Supply

In Figure III-1 the user's air supply is connected to the main pressure regulator indicated in the upper left of the schematic. To keep system performance constant, the air supply should be capable of providing 25 scfm at 90 PSIG (and not more than 150 PSIG) with 10 PSI or less variation. This main air supply fitting is located just below the left corner of the front panel, shown in Figure III-2. From this regulator air passes through 2 additional oil traps and two 12 inch filter canisters in parallel. After these filters, the air supply branches to 6 paths, each with its own regulator,to the points where air is required by the system. The main inlet regulator is normally set at 60 PSIG using the gauge located on the upper left corner of the front panel, while the others are set at 45 PSIG (except for P_{oil}). Most of this air supply subsystem, shown in Figure III-3, is located at the left end of the HCSAG.

The liquid supply subsystem is located toward the right rear corner (see Figure III-4). The path of the liquid in this sybsystem is shown in Figure III-1 as "solid" tubing. As shown schematically in Figure III-1, 3 reservoirs (1, 2, and 3) in addition to the polydisperse aerosol generator (PAG) canister are utilized. The aerosol liquid (DuoSeal Vacuum Pump Oil at this time) is poured into the top (No. 1) reservoir at the fill tube. Opening the valve under reservoir No. 1 allows liquid to flow into reservoir No. 3 which feeds the PAG. Compressed air at pressure P_{oil} is utilized to augment gravity flow in transferring liquid to the PAG. This pressure regulator is located at the bottom right of the front panel where it can be adjusted to keep the oil level constant as viewed through the site glass adjacent to it. Once that setting is established ΔP_{oil} (measured at the gauge adjacent to the site glass) is an accurate parameter for reproducing a desired fluid level. Overflow from reservoir No. 3 flows to reservoir No. 2 until the levels in reservoirs No. 2 and 3 equalize. Then reservoir No. 2 is emptied by pumping liquid back to reservoir No. 1 via the hand operated peristaltic pump.

B. Polydisperse Aerosol Generator

Air to PAG is controlled at the top right of the front panel (see Figure III-2) by a ball valve. The pressure upstream of the 6x4 Laskin nozzles (P_{GJETS}) and in the cannister (P_{GEN}) are monitored at the front panel below the ball valve. The flowrate through the nozzles is given by

$$Q_{GJETS} = 2.55\ (P_{GJETS} + P_{BAR})n \qquad (1)$$

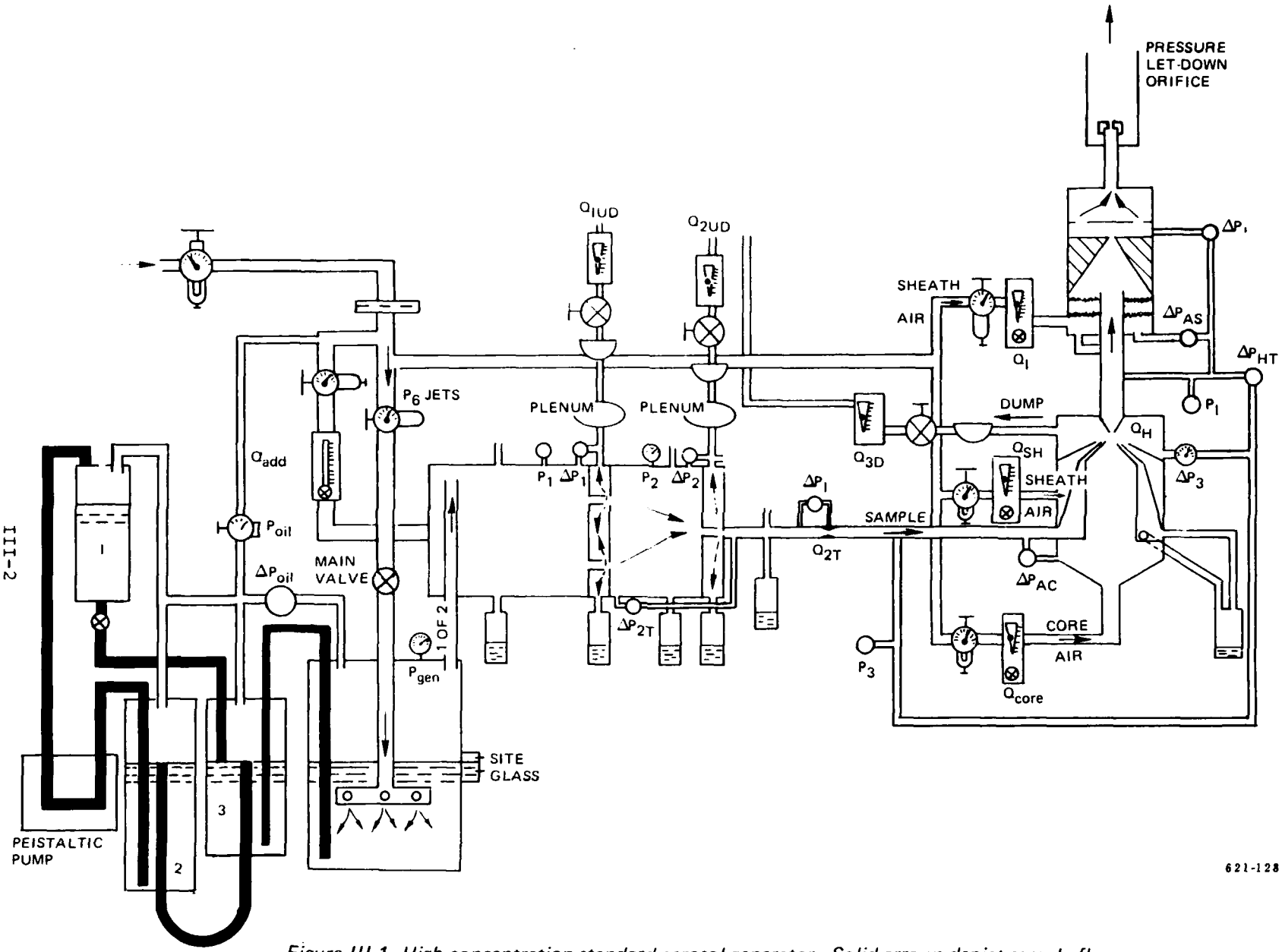

Figure III-1. High concentration standard aerosol generator. Solid arrows depict sample flow and dotted arrows are waste streams.

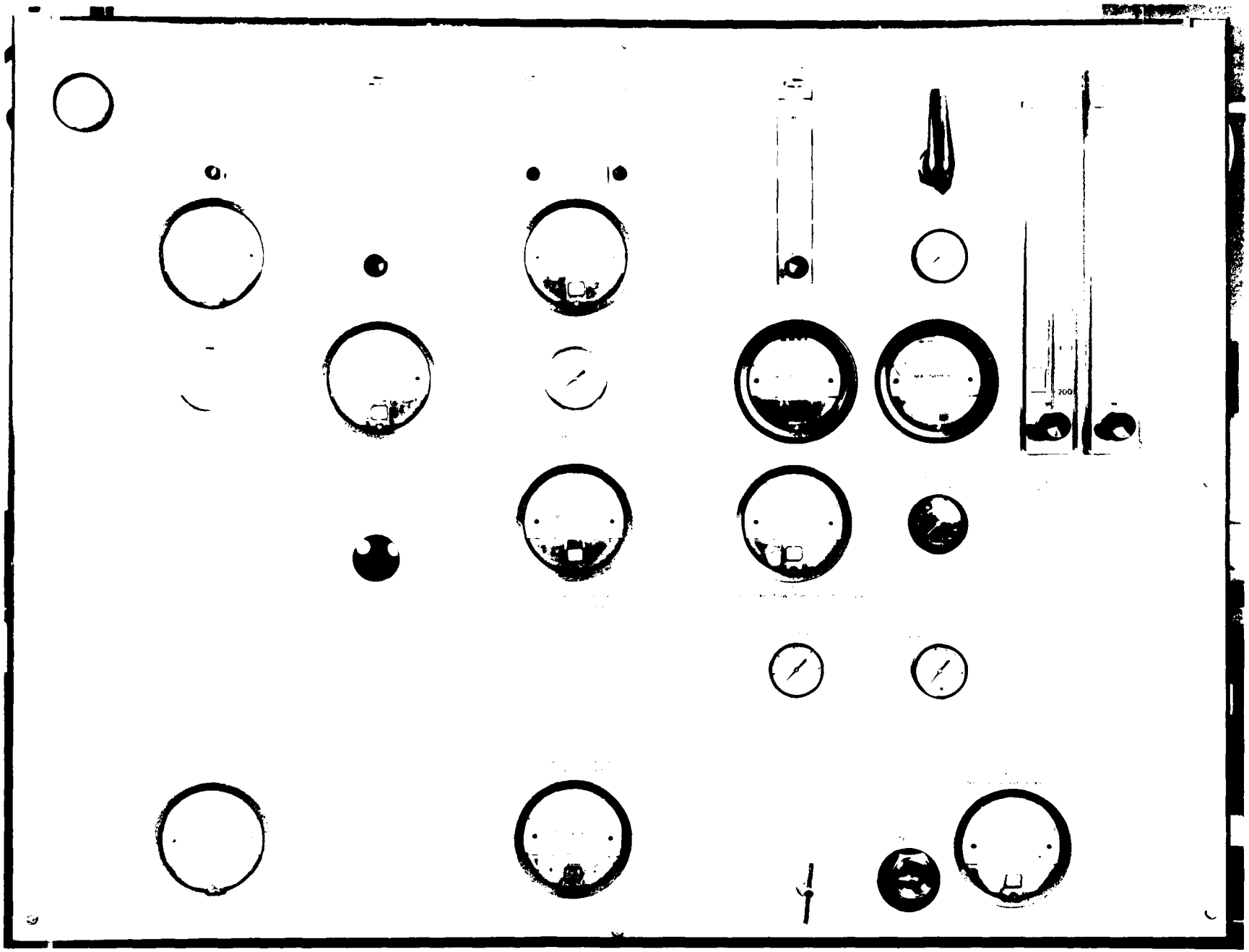

5336-3

Figure III-2. Front Panel of HCSAG.

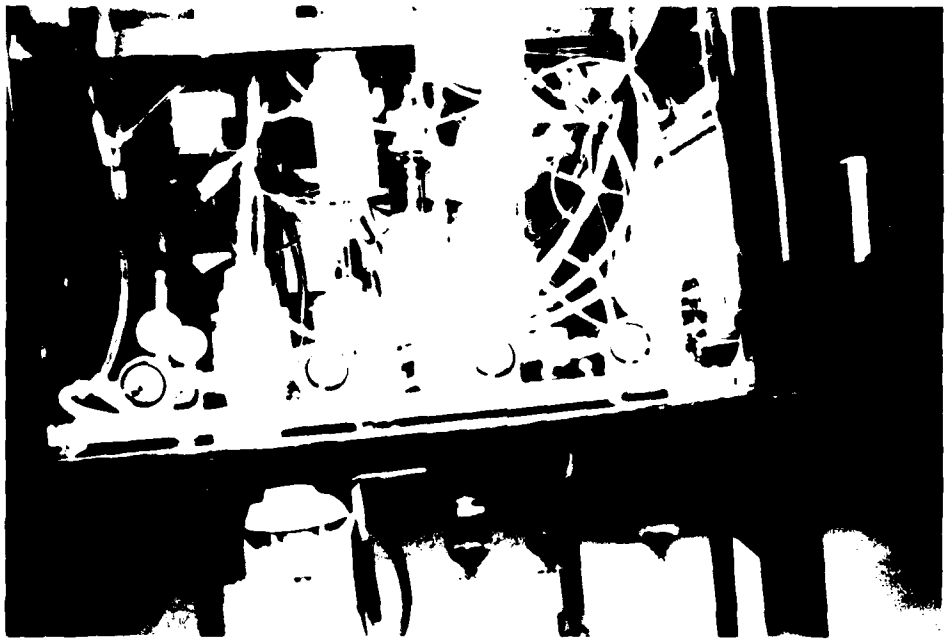

Figure III-3. Compressed Air Supply Subsystem. View of left end of HCSAG.

Figure III-4. Liquid Supply Subsystem. View of right end of HCSAG. Also shows coalescing filters for exhausting Q_{1D} and Q_{2D}.

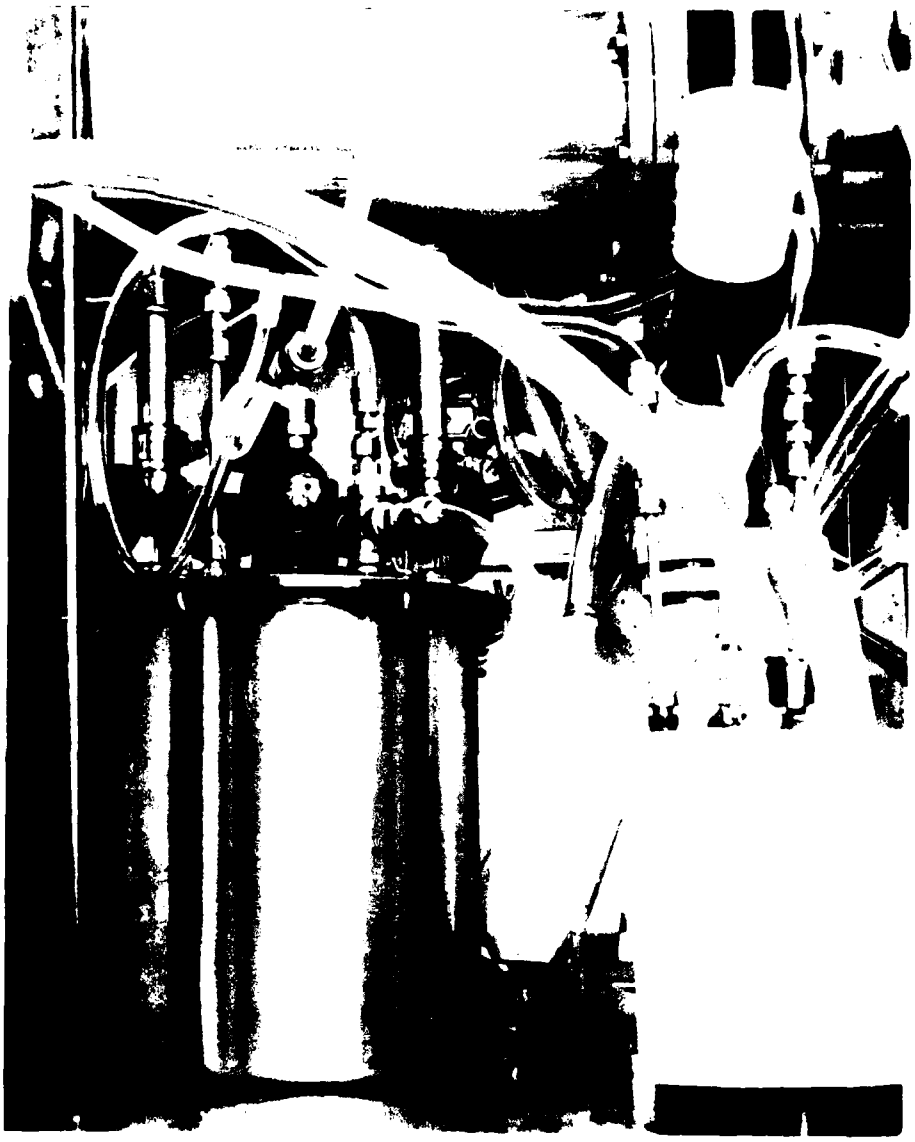

5335-6

Figure III-5. Polydisperse Aerosol Generator and First Virtual Impactor (above). View from rear of HCSAG.

Figure III-6. First and Second Virtual Impactors. View from rear of HCSAG.

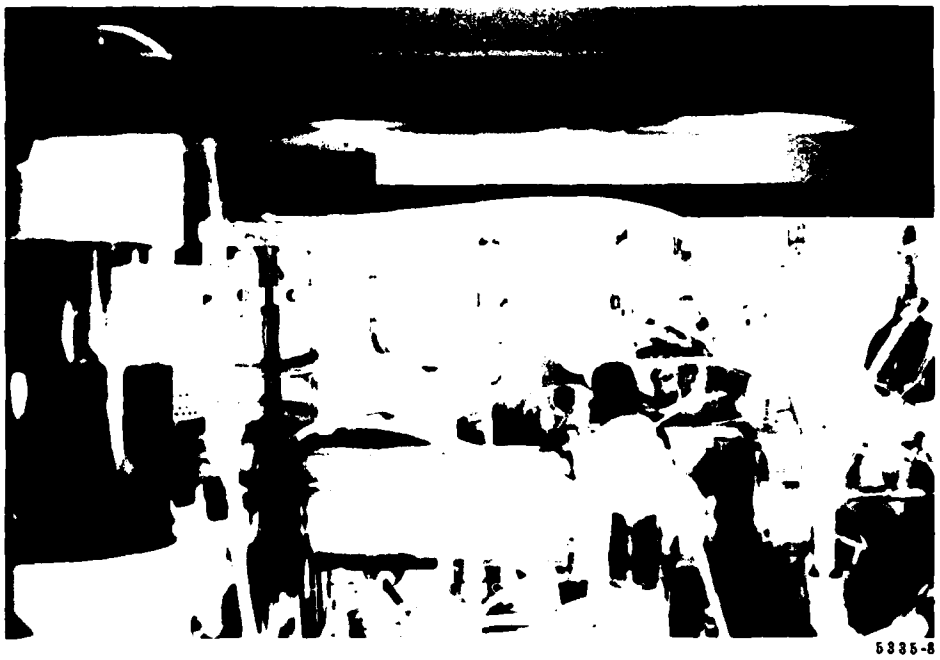

Figure III-7. First and Second Virtual Impactors showing exhaust tubing to coalescing filters (left). View from left rear of HCSAG.

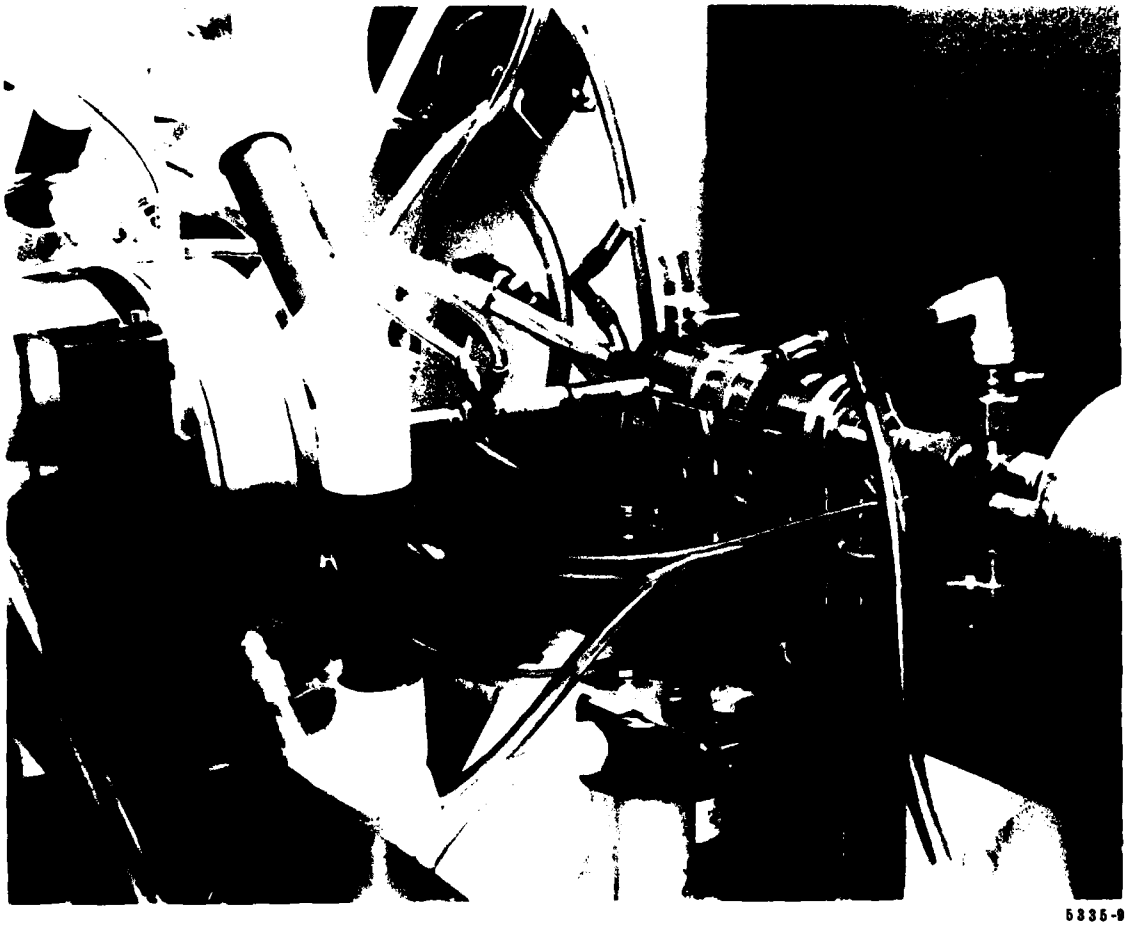

Figure III-8. Second Virtual Impactor (left), Venturi and Hochrainer Impactor. View from right rear of HCSAG. Coalesing filter for exhausting Q_{HD} is at bottom center.

Figure III-9. Exit from Second Virtual Impactor, Venturi, and Hochrainer Impactor. View from left end of HCSAG.

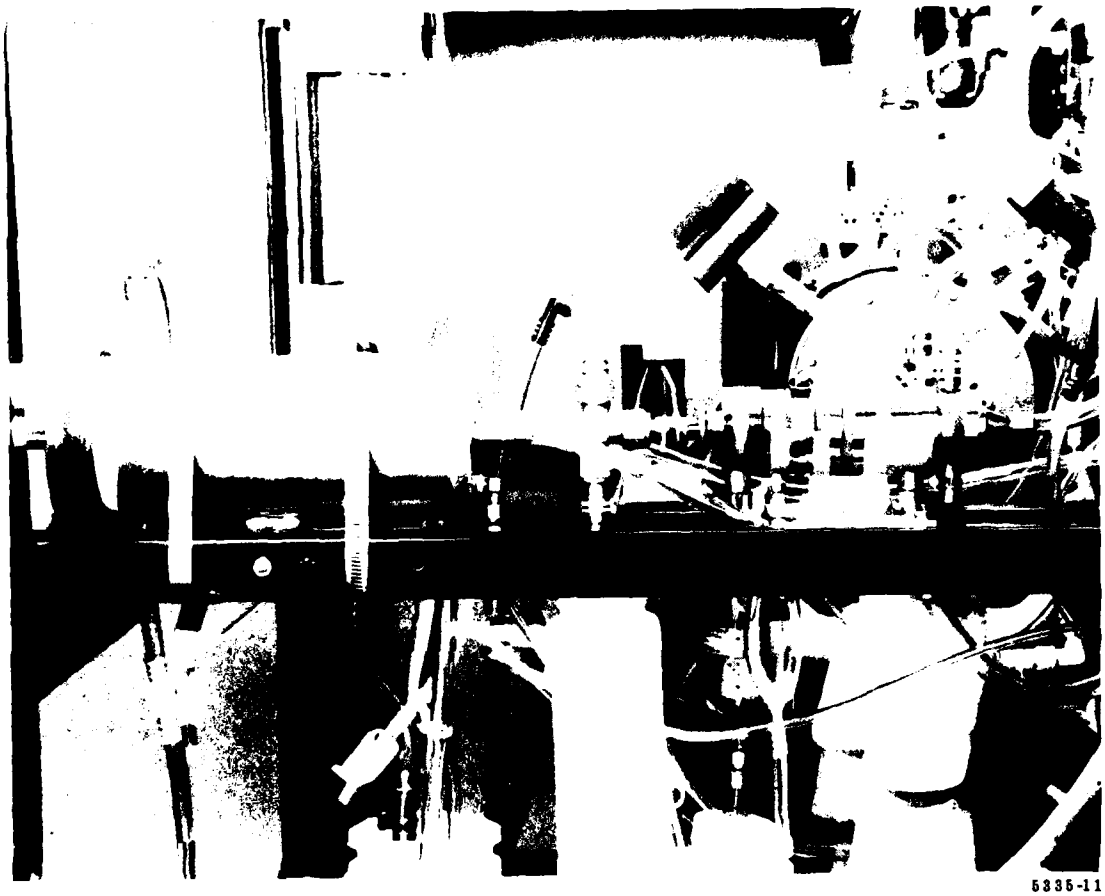

Figure III-10. Hochrainer Impactor (right) and Outlet Impactor (left). View from left end of HCSAG.

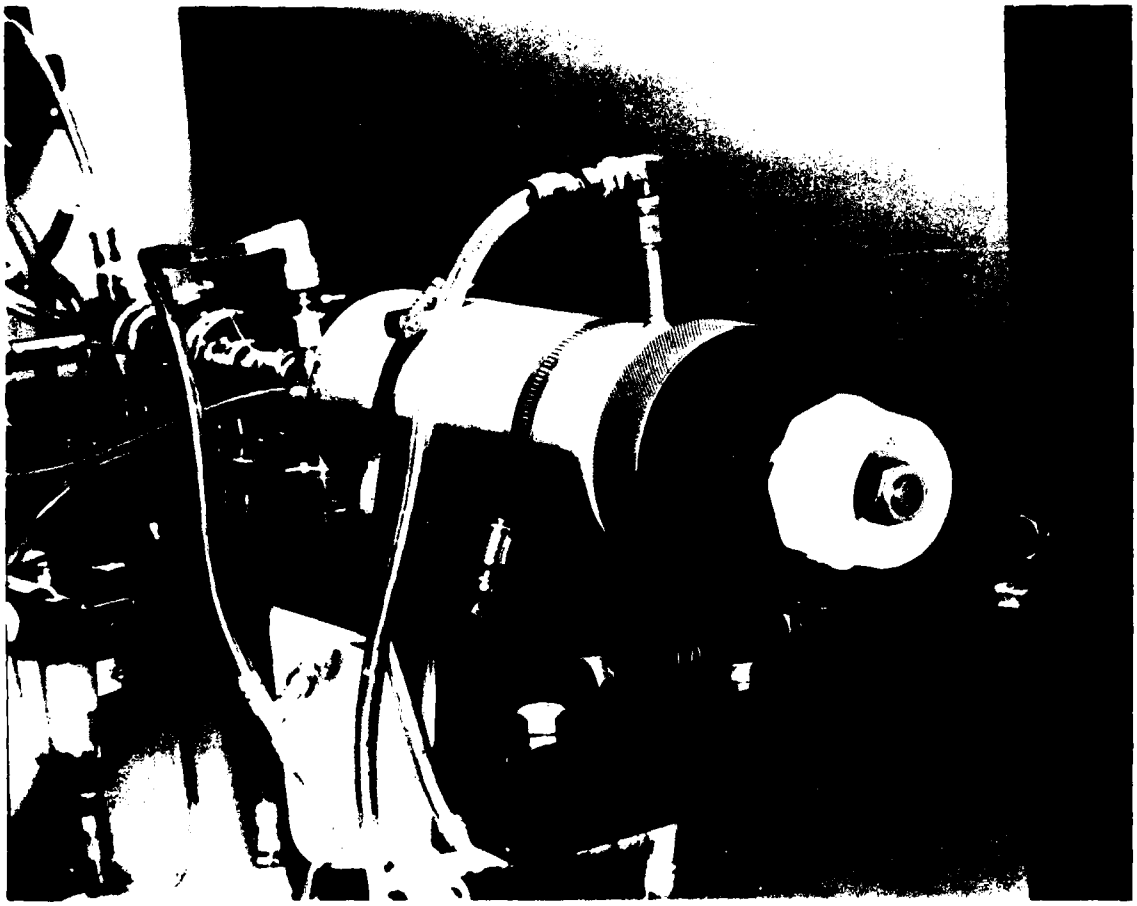

5335-12

Figure III-11. Hochrainer Impactor (left), Outlet Impactor, and Pressure Let-Down Orifice (right). View of right rear of HCSAG.

1,3. CLEAN AIR ENTRANCE
2. AEROSOL ENTRANCE
4. JET
5. NOZZLE
6. SUCTION TUBE
7. CONNECTION TUBE
8. NOZZLE GAP ADJUSTMENT SCREW
9. FLOW STRAIGHTENER
10. CLEAN AIR LAMINAR FLOW RINGS
11. AEROSOL LAMINAR FLOW RINGS
12. PRESSURE TAP

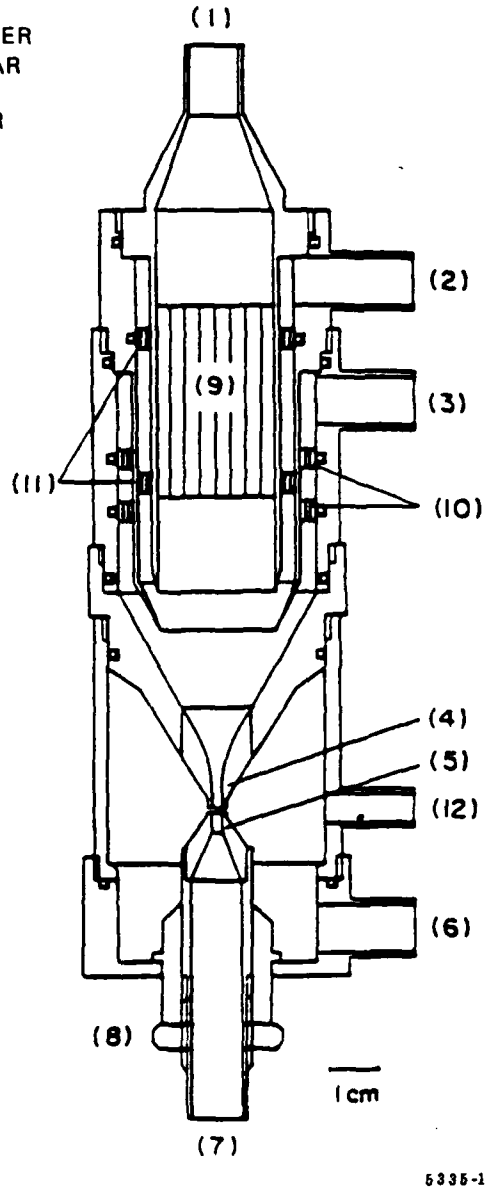

Figure III-12. Hochrainer Impactor.

ΔP_{2T} can also be monitored on the front panel for diagnostic purposes. It may be desirable to use this parameter to set and monitor the token flow of VP2 (the aerosol flowrate to VP3). If this is practical, the venturi would not be necessary and could be removed. Additional investigation of the behavior of ΔP_{2T} would be needed to verify its usefulness as a flow monitor. Pressure fluctuations in this token flow due to turbulence are of concern.

D. Hochrainer Virtual Impactor

The token flow of VP2 passes through a venturi which provides an accurate determination of flowrate:

$$Q_{2T} = 0.83\sqrt{\Delta P_V / (P_3 + P_{BAR})} \tag{5}$$

for Q_{2T} in alpm, ΔP_V (pressure drop across the venturi) in inches of water, T in °R, P_3 (pressure at the inlet to VP3) in PSIG and P_{BAR} in PSIA. ΔP_V and P_3 are monitored by gauges on the front panel, near the center. The venturi is shown at the center of Figure II-11 with VP2 to the left and VP3 to the right. The aerosol stream is merged with two other flows Q_{CORE} and Q_{SH} in the Hochrainer impactor as described in Section IIB. An assembly drawing of this device is given in Figure III-12 with the major dimensions. Figures III-8 and III-9 are photographs of the actual device. Q_{CORE} and Q_{SH} are monitored by rotameters at the top center of the front panel. The readings from these meters must be corrected by

$$Q_{CORE} \text{ or } Q_{SH} = Q_R \sqrt{(P_3 + P_{BAR})/14.7} \tag{6}$$

for flowrate in slpm where Q_R is the reading of the rotameter. To convert this flow to actual volume flowrate at the jet of VP3:

$$Q_{CORE} \text{ or } Q_{SH} = Q_R\sqrt{14.7/(P_3 + P_{BAR})} \tag{6a}$$

where Q_{CORE} and Q_{SH} are in alpm. The flowrate through the jet of VP3 is given by

$$Q_3 = 0.61\sqrt{\Delta P_3 T/(P_3 + P_{BAR})} \tag{7}$$

for Q_3 in alpm (upstream conditions), ΔP_3 in inches of water, P_3 in PSIG, and P_{BAR} in PSIA. A meter giving ΔP_3 is located on the front panel directly above the P_3 meter.

A meter (ΔP_{AC}) at the bottom of the front panel, under the ΔP_V meter, is used to monitor the pressure drops across the laminar flow rings (No. 11 in Figure III-12). The holes in these rings can become covered with liquid due to wall losses. ΔP_{AC} may be used to diagnose obstruction of flow by liquid. Under normal conditions ΔP_{AC} oscillates between $\pm 0.2''H_2O$. Cotton threads to serve as a wick were added to the base of these rings to reduce the buildup of liquid. The wick extends into the drain bottle for this region. Care should be exercised not to pull on this wick when emptying the drain bottle.

Because of the potential of liquid drops collecting on the entrance to the jet of VP3, the user is cautioned to avoid operating the system without Q_{CORE} and Q_{SH} flow. Most of the flow of VP3 is exhausted through a coalescing filter, a metering valve, and a rotameter. The valve and rotameter are located on the front panel just left of center. This valve is important for adjusting the flow split between the exhausted air, Q_{HD}, and the token flow, Q_{HT}. The rotameter gives Q_{HD} in slpm; it can be converted to alpm at the conditions of the inlet of VP3 by

$$Q_{HD} = Q_R \; 26.6/(P_3+P_{BAR}) \; \sqrt{P_{BAR}} \tag{8}$$

where Q_R is the rotameter value. The primary aerosol (without the small fraction) passes into the token flow of VP3. This flowrate Q_{HT} is determined by the difference (Q_3 - Q_{HD}). The pressure differential, ΔP_{HT}, between the token flow and inlet to the jet of VP3 is also metered on the front panel for diagnostic use. This meter is located between the rotameter and control valve for Q_{HD}. As with ΔP_{2T} this parameter is expected to be proportional to the token flow Q_{HD}. However additional investigation of its behavior, beyond the scope of this project, will be needed to verify its use as a monitor of Q_{HT}.

E. Outlet Impactor

The token flow of VP3 is merged with a sheath of clean air in the outlet impactor (OP) shown in schematically in Figure III-1 and in the photographs of Figures III-10 and III-11. This sheath air flowrate Q_I is monitored by a rotameter at the top left of the front panel. The reading on this rotameter must be corrected by

$$Q_I = Q_R\sqrt{(P_I+P_{BAR})/14.7} \tag{9}$$

for flowrate in slpm and by

$$Q_I = Q_R\sqrt{14.7/(P_I+P_{BAR})} \tag{9a}$$

for flowrate in alpm where Q_R is the rotameter reading and P_I is the pressure at the inlet to OP in PSIG. The meter giving P_I is located below the Q_I rotameter. Q_I is set at a value for which OP will remove the large size fraction. In principle the exact value depends upon the trade-off between the desired width of the distribution versus the desired particle rate. However the size distribution of particles from the Virtis SG-40 polydisperse aerosol generator with DuoSeal Vacuum Pump oil, drops off sharply at about 2 μm so adjustment of Q_I has little effect on the output. Of course if Q_I is too high the desired particle sizes would be impacted. Varying Q_I affects P_I which affects the flow split in VP3. Thus Q_{HD} must be adjusted appropriately to maintain a constant token flowrate Q_{HT}. The most important priority in adjusting Q_I is to provide the flowrate needed to maintain the pressure (P_I) necessary for suitable flow split of the virtual impactors throughout the HCSAG. This pressure is determined by the pressure drop occurring across the OP jet and the pressure let-down orifice PLDO at the HCSAG outlet (see Figure III-11). The desired flowrate, Q_I, can be modified by changing the diameter of the PLDO. Two sizes (1/16" and 3/32") are supplied as accessories.

Wire screens are used as diffusers to evenly distribute the sheath air flow, Q_I, prior to merging with the aerosol stream, Q_{HT}. As with ΔP_{AC}, the pressure differential (ΔP_{AS}) between the token flow and the sheath flow is monitored to indicate obstructions of the sheath air flow due to liquid build up on these screens. This meter is located at bottom left of the front panel. The user is cautioned against operating the system without some sheath air to minimize the deposit of drops on the entrance cone of the VP3 jet.

The pressure drop across the jet of OP, ΔP_I, is monitored on the front panel at the upper left between the Q_I rotameter and the P_3 gauge. The flowrate through this jet is given by

$$Q_I + Q_{HT} = 2.9 \sqrt{\Delta P_I T/(P_I + P_{BAR})} \qquad (10)$$

where Q_I and Q_{HT} are in alpm and ΔP_I is in inches of water.

F. Oil Drainage

As shown in Figures III-1 through III-11, a substantial part of the HCSAG hardware is designed to drain liquid collected on the walls away from the flowstreams. These losses are undesirable but unavoidable. Continuous operation of the HCSAG at conditions described in Section IV for 8 hours indicates that the current drainage system is adequate. Accumulation of liquid is very slow in all drain bottles except for the one which receives liquid collected from the inlet chamber of VP1. This bottle is located beside the PAG canister at the right end of the HCSAG, easily accessible for emptying.

Table IV-1. HCSAG Operating Parameters for Performance Test

Imp. Run No.	P_{GJETS} (PSIG)	P_{GEN} (PSIG)	P_1 (PSIG)	ΔP_1 (PSIG)	P_2 (PSIG)	ΔP_2 (PSIG)	ΔP_{2T} ("H_2O)	Q_{2D} (SCFH)	ΔP_v ("H_2O)	Q_{core} (LPM)	Q_{SH} (LPM)	P_3 (PSIG)	ΔP_3 ("H_2O)	Q_{HD} (SCFH)	ΔP_{HT} ("H_2O)	Q_I (LPM)	P_I (PSIG)	ΔP_I ("H_2O)	ΔP_{AC} ("H_2O)	ΔP_{AS} ("H_2O)	ΔP_{oil} ("H_2O)
1	37	11.4	10.3	7.55	10.4	8.9	2.0	135	.41	15.5	3.2	10.4	37	58	.20	31	10.3	3.8	-0.3-0.2	.6	
	37	11.4	10.3	7.6	10.4	8.9	2.0	135	.42	16	3.1	10.4	37	55	.20	31	10.3	3.7	-0.3-0.2	.6	
2	35.0	9.9	10.1	7.5	10.2	8.7	2.0	137	.55	16.5	3.0	10.2	40	62	.1-.50	30-40	9.8	4.0	-0.3-0.2	.5	
	35.0	10.0	10.1	7.5	10.1	8.7	2.0	140	.53	16.5	3.0	10.0	40	60	.1-.50	30-40	9.9	4.0	-0.3-0.2	.5	
	35.0	9.9	10.0	7.5	9.9	8.8	2.0	140	.54	16.5	3.0	10.0	39.5	61	.1-.50	30-40	9.8	4.0	-0.3-0.2	.5	
3	35.0	9.9	10.1	7.5	9.8	8.7	2.0	140	.53	16.5	3.0	9.9	39.0	60	.1-.50	30-40	9.8	4.0	-0.3-0.2	.5	7.5
	35.0	9.9	10.0	7.4	9.8	8.6	2.0	140	.56	16.5	3.0	10.0	40.0	61	.1-.50	30-40	9.8	4.0	-0.3-0.2	.5	9
	35.0	9.9	10.0	7.4	9.8	8.6	2.0	140	.56	16.5	3.0	10.1	40.0	62	.1-.50	30-40	9.8	4.0	-0.3-0.2	.5	11
4	35.0	9.9	10.0	7.5	10.0	8.7	.5-1.5	140	.57	15.5	3.0	10.0	39.0	63	.1-.4	30-40	9.9	4.0	-0.3-0.2	.5	
	35.0	9.9	10.0	7.5	9.8	8.6	.5-1.5	140	.57	15.5	3.0	9.9	40.0	62	0-.3	30-45	9.8	4.0	-0.3-0.2	.5	
	35.0	10.0	10.0	7.5	9.9	8.6	.5-1.5	140	.54	15.5	3.0	9.9	40.0	63		30-40	9.9	3.9	-0.2-0.2	.5	
5	35.0	9.9	10.0	7.5	9.8	8.6	.5-1.5	140	.52	15.5	3.1	10.1	41	63	.1-.5	30-50	9.8	3.9	-0.2-0.2	.5	
	35.0	9.9	10.0	7.5	9.9	8.7	.5-1.5	140	.55	15.5	3.1	9.9	41	64	.1-.5	30-50	9.6	3.9	-0.2-0.2	.5	

Table IV-2. Stage Configuration of UW Mark V Impactor for Measurement of HCSAG Output Aerosol.

[illegible]

[illegible]	[illegible]	[illegible]	[illegible]	[illegible]
[illegible]	[illegible]	[illegible]	[illegible]	[illegible]
[illegible]	[illegible]	[illegible]	[illegible]	[illegible]
[illegible]	[illegible]	[illegible]	[illegible]	[illegible]
[illegible]	[illegible]	[illegible]	[illegible]	[illegible]
[illegible]	[illegible]	[illegible]	[illegible]	[illegible]
[illegible]	[illegible]	[illegible]	[illegible]	[illegible]
[illegible]	[illegible]	[illegible]	[illegible]	[illegible]
[illegible]	[illegible]	[illegible]	[illegible]	[illegible]

Table IV-3. Run Parameters and Results of Impactor Measurements of HCSAG Output Aerosol: Run No. 1.

```
*********************IMPACTOR VERSION 2.5******************

************* INPUT DATA ************

 1)PART. DIAMETER     PHYSICAL
 2)DATE OF TEST: 12/10/84
 3)TIME OF TEST: 1030
 4)LOCATION OF TEST: LAB
 5)TEST NUMBER      1   REMARKS:
 6)TEST TYPE          OUTLET
 7)RUN NUMBER: 1-FILE NAME:TIR1.OT
 8)RUN REMARKS: SEE OTHER DATASHEETS
10)IMPACTOR TYPE: UW 1T5-7-9
UW V 1(DISK)-2-3-4-5-7-9

 9)WATER VAPOR            .00%
    CO2   1.00%          CO    .00%
    O2   19.00%          N2  80.00%
12) ORIFICE ID (OPTIONAL): .093A
13) SUBSTRATE MATERIAL: BARE METAL


 1)GAS METER VOL     10.470 CUBIC FEET
 2)IMPACTOR DELTA P    .00 IN. HG.
 3)ORIFICE DELTA P    -10. INCHES H2O
 4)STACK PRESSURE      .00 INCHES H2O
 5)BAROMETRIC PRES   29.50 INCHES HG
 6)STACK TEMP         74    DEGREES F
 7)METER TEMP         74    DEGREES F
 8)IMPACTOR TEMP      74    DEGREES F
 9)SAMPLE TIME       20.00 MINUTES
10)AVG GAS VEL        1.05 FEET/SEC
11)ORIFICE PRES        .00 INCHES HG
12)NOZZLE DIA          .500 INCHES
13)MAX  PART  DIA    40.00 MICRONS


 MASS GAIN OF STAGE 1     .20 MG
 MASS GAIN OF STAGE 2     .12 MG
 MASS GAIN OF STAGE 3    1.38 MG
 MASS GAIN OF STAGE 4   11.54 MG
 MASS GAIN OF STAGE 5    7.56 MG
 MASS GAIN OF STAGE 6     .31 MG
 MASS GAIN OF FILTER      .27 MG

MASS GAIN OF BLANK SUBSTRATE      .00
MASS GAIN OF BLANK FILTER         .00

*********        RESULTS      **********

TEST NUMBER: 1   RUN NUMBER: 1

ACTUAL FLOW RATE            .537 CFM
FLOW RATE AT STANDARD CONDITIONS      .522 CFM
PERCENT ISOKINETIC        354.779 %
VISCOSITY              181.9E-06GM/CM SEC
CALCULATED IMPACTOR DELTA P =  1.20 IN. HG
```

STAGE	CUNN. CORR.	DP (PHYSICAL)	DP (IMP AERO)	CUM FREQ.	RE. NO.	V=D50 UM-M/S
1	1.015	11.133	10.484	99.065	1633	21.0
2	1.033	4.964	4.716	98.503	691	20.3
3	1.060	2.398	2.317	92.049	293	13.4
4	1.113	1.456	1.436	38.073	356	15.0
5	1.220	.722	.748	2.7128	550	18.7
6	1.368	.459	.502	1.2629	731	21.4

TOTAL MASS CONCENTRATION = 7.24E+01 MG/DRY NORMAL CUBIC METER

SPLINE FIT ON PHYSICAL DIAMETER BASIS

PARTICLE DIA. (MICRONS)	CUMFR (STDDEV)	CUMFR (PERCENT)	CUM.MASS (MG/DRY N.CU.METER)	DM/DLOGD
.100	- 3.2870	.05	3.68E-02	2.04E-01
.159	- 2.9698	.15	1.08E-01	5.57E-01
.251	- 2.6527	.40	2.90E-01	1.36E+00
.398	- 2.3356	.98	7.07E-01	2.99E+00
.631	- 2.0184	1.98	1.43E+00	6.45E+00
1.000	- 1.3691	8.55	6.19E+00	5.02E+01
1.585	- .0011	49.96	3.62E+01	2.42E+02
2.512	1.9239	93.62	6.78E+01	4.05E+01
3.981	2.0994	98.21	7.11E+01	3.50E+00
6.310	2.2282	98.71	7.14E+01	1.27E+00
10.000	2.3290	99.01	7.16E+01	9.38E-01
15.850	2.4199	99.22	7.18E+01	9.93E-01
25.120	2.7230	99.68	7.21E+01	2.14E+00
39.810	4.4046	100.00	7.24E+01	3.42E-02
63.100	134.471	100.00	7.24E+01	0.00E+00
100.00	1000000	100.00	7.24E+01	0.00E+00
158.50	1000000	100.00	7.24E+01	0.00E+00
251.20	1000000	100.00	7.24E+01	0.00E+00
398.10	1000000	100.00	7.24E+01	0.00E+00
631.00	1000000	100.00	7.24E+01	0.00E+00

Table IV-4. Run Parameters and Results of Impactor Measurements of HCSAG Output Aerosol: Run No. 2.

```
*******************IMPACTOR VERSION 3.0*******************

************* INPUT DATA ***********

 1)PART. DIAMETER    PHYSICAL
 2)DATE OF TEST: 12/14/84
 3)TIME OF TEST: 855
 4)LOCATION OF TEST: LAB
 5)TEST NUMBER    1  REMARKS:
 6)TEST TYPE         OUTLET
 7)RUN NUMBER: 2-FILE NAME:TIR2.DT
 8)RUN REMARKS: KEEPING OIL LEVEL SLIGHTY LOWER THAN OTHER PREVIOUS
10)IMPACTOR TYPE: UW 1-3T7-9
UW V 1(DISK)-3-4-5-6-7-9

 9)WATER VAPOR          .00%
   CO2  1.00%        CO    .00%
   O2  19.00%        N2  80.00%
12) ORIFICE ID (OPTIONAL): .093A
13) SUBSTRATE MATERIAL: BARE METAL


 1)GAS METER VOL    16.210 CUBIC FEET
 2)IMPACTOR DELTA P   .00 IN. HG.
 3)ORIFICE DELTA P   -10. INCHES H2O
 4)STACK PRESSURE     .00 INCHES H2O
 5)BAROMETRIC PRES  29.75 INCHES HG
 6)STACK TEMP       75    DEGREES F
 7)METER TEMP       75    DEGREES F
 8)IMPACTOR TEMP    75    DEGREES F
 9)SAMPLE TIME      30.00 MINUTES
10)AVG GAS VEL       1.85 FEET/SEC
11)ORIFICE PRES       .00 INCHES HG
12)NOZZLE DIA         .500 INCHES
13)MAX  PART  DIA   20.00 MICRONS


 MASS GAIN OF STAGE 1     .04 MG
 MASS GAIN OF STAGE 2    1.22 MG
 MASS GAIN OF STAGE 3    3.30 MG
 MASS GAIN OF STAGE 4   22.95 MG
 MASS GAIN OF STAGE 5   20.82 MG
 MASS GAIN OF STAGE 6    3.98 MG
 MASS GAIN OF STAGE 7    1.69 MG
 MASS GAIN OF FILTER     3.47 MG

MASS GAIN OF BLANK SUBSTRATE      .00
MASS GAIN OF BLANK FILTER         .00

*********        RESULTS      **********

TEST NUMBER: 1  RUN NUMBER: 2

ACTUAL FLOW RATE            .554 CFM
FLOW RATE AT STANDARD CONDITIONS      .543 CFM
PERCENT ISOKINETIC        365.833 %
VISCOSITY                181.6E-06GM/CM SEC
CALCULATED IMPACTOR DELTA P =  1.46 IN. HG
```

STAGE	CUNN. CORR.	DP (PHYSICAL)	DP (IMP AERO)	CUM FREQ.	RE. NO.	V=D50 UM-M/S
1	1.015	10.955	10.310	99.930	1703	21.3
2	1.033	4.880	4.645	97.000	721	20.6
3	1.066	2.446	2.361	92.065	305	14.1
4	1.107	1.523	1.490	52.132	371	14.1
5	1.159	1.021	1.020	15.904	480	18.5
6	1.219	.747	.771	8.9786	570	20.3
7	1.356	.471	.513	6.0379	763	22.7

TOTAL MASS CONCENTRATION = 1.24E+02 MG/DRY NORMAL CUBIC METER

SPLINE FIT ON PHYSICAL DIAMETER BASIS

PARTICLE DIA. (MICRONS)	CUMFR (STDDEV)	CUMFR (PERCENT)	CUM.MASS (MG/DRY N.CU.METER)	DM/DLOGD
.100	- 2.2563	1.20	1.50E+00	4.08E+00
.159	- 2.0469	2.03	2.53E+00	6.40E+00
.251	- 1.8376	3.31	4.12E+00	9.61E+00
.398	- 1.6282	5.17	6.44E+00	1.38E+01
.631	- 1.4365	7.54	9.39E+00	1.94E+01
1.000	- 1.0341	15.05	1.87E+01	1.11E+02
1.585	.1809	57.18	7.12E+01	3.60E+02
2.512	1.4609	92.08	1.16E+02	7.19E+01
3.981	1.8949	97.09	1.21E+02	9.52E+00
6.310	2.2873	98.89	1.23E+02	1.11E+01
10.000	3.0317	99.88	1.24E+02	2.07E+00
15.850	5.7979	100.00	1.24E+02	1.05E-04
25.120	1000000	100.00	1.24E+02	0.00E+00
39.810	1000000	100.00	1.24E+02	0.00E+00
63.100	1000000	100.00	1.24E+02	0.00E+00
100.00	1000000	100.00	1.24E+02	0.00E+00
158.50	1000000	100.00	1.24E+02	0.00E+00
251.20	1000000	100.00	1.24E+02	0.00E+00
398.10	1000000	100.00	1.24E+02	0.00E+00
631.00	1000000	100.00	1.24E+02	0.00E+00

Table IV-5. Run Parameters and Results of Impactor Measurements of HCSAG Output Aerosol: Run No. 3.

```
*********************IMPACTOR VERSION 3.0*********************

************* INPUT DATA ***********

 1)PART. DIAMETER     PHYSICAL
 2)DATE OF TEST: 12/14/84
 3)TIME OF TEST: 1017
 4)LOCATION OF TEST: LAB
 5)TEST NUMBER     1  REMARKS:
 6)TEST TYPE          OUTLET
 7)RUN NUMBER: 3-FILE NAME:TIR3.OT
 8)RUN REMARKS: KEEPING OIL LEVEL SLIGHTY LOWER THAN OTHER PREVIOUS
10)IMPACTOR TYPE: UW 1-317-9
UW V 1(DISK)-3-4-5-6-7-9

 9)WATER VAPOR            .00%
    CO2  1.00%          CO    .00%
    O2  19.00%          N2 80.00%
12) ORIFICE ID (OPTIONAL): .093A
13) SUBSTRATE MATERIAL: BARE METAL

 1)GAS METER VOL     10.841 CUBIC FEET
 2)IMPACTOR DELTA P    .00 IN. HG.
 3)ORIFICE DELTA P   -10. INCHES H2O
 4)STACK PRESSURE      .00 INCHES H2O
 5)BAROMETRIC PRES   29.75 INCHES HG
 6)STACK TEMP        75    DEGREES F
 7)METER TEMP        75    DEGREES F
 8)IMPACTOR TEMP     75    DEGREES F
 9)SAMPLE TIME       20.00 MINUTES
10)AVG GAS VEL        1.85 FEET/SEC
11)ORIFICE PRES        .00 INCHES HG
12)NOZZLE DIA          .500 INCHES
13)MAX  PART  DIA    20.00 MICRONS

 MASS GAIN OF STAGE 1     .12 MG
 MASS GAIN OF STAGE 2     .34 MG
 MASS GAIN OF STAGE 3    2.35 MG
 MASS GAIN OF STAGE 4   18.98 MG
 MASS GAIN OF STAGE 5   12.45 MG
 MASS GAIN OF STAGE 6    2.07 MG
 MASS GAIN OF STAGE 7    1.08 MG
 MASS GAIN OF FILTER     1.21 MG

MASS GAIN OF BLANK SUBSTRATE      .00
MASS GAIN OF BLANK FILTER         .00

*********        RESULTS      **********

TEST NUMBER: 1  RUN NUMBER: 3

ACTUAL FLOW RATE            .555 CFM
FLOW RATE AT STANDARD CONDITIONS      .545 CFM
PERCENT ISOKINETIC        366.995 %
VISCOSITY               181.6E-06GM/CM SEC
CALCULATED IMPACTOR DELTA P =  1.47 IN. HG
```

STAGE	CUNN. CORR.	DP (PHYSICAL)	DP (IMP AERO)	CUM FREQ.	RE. NO.	V=D50 UM-M/S
1	1.015	10.938	10.301	99.489	1709	21.3
2	1.033	4.880	4.637	98.888	723	20.6
3	1.066	2.441	2.357	92.720	304	14.1
4	1.107	1.528	1.495	43.549	372	14.2
5	1.160	1.019	1.026	11.299	481	18.6
6	1.220	.745	.769	5.9326	580	20.4
7	1.357	.470	.512	3.1347	765	22.7

TOTAL MASS CONCENTRATION = 1.25E+02 MG/DRY NORMAL CUBIC METER

SPLINE FIT ON PHYSICAL DIAMETER BASIS

PARTICLE DIA. (MICRONS)	CUMFR (STDDEV)	CUMFR (PERCENT)	CUM.MASS (MG/DRY N.CU.METER)	DM/DLOGD
.100	- 2.0153	2.19	2.74E+00	1.50E+00
.159	- 1.9494	2.44	3.06E+00	1.64E+00
.251	- 1.9239	2.72	3.40E+00	1.79E+00
.398	- 1.8782	3.02	3.77E+00	1.95E+00
.631	- 1.4791	4.46	5.02E+00	1.87E+01
1.000	- 1.2419	10.71	1.34E+01	8.54E+01
1.585	- .0154	49.30	6.17E+01	4.06E+02
2.512	1.5286	93.40	1.17E+02	8.75E+01
3.981	2.1542	98.44	1.23E+02	7.01E+00
6.310	2.3971	99.17	1.24E+02	3.70E+00
10.000	2.4791	99.63	1.25E+02	2.03E+00
15.850	4.3653	100.00	1.25E+02	1.31E-01
25.120	1000000	100.00	1.25E+02	0.00E+00
39.810	1000000	100.00	1.25E+02	0.00E+00
63.100	1000000	100.00	1.25E+02	0.00E+00
100.00	1000000	100.00	1.25E+02	0.00E+00
158.50	1000000	100.00	1.25E+02	0.00E+00
251.20	1000000	100.00	1.25E+02	0.00E+00
398.10	1000000	100.00	1.25E+02	0.00E+00
631.00	1000000	100.00	1.25E+02	0.00E+00

Table IV-6. Run Parameters and Results of Impactor Measurements of HCSAG Output Aerosol: Run No. 4.

```
*********************IMPACTOR VERSION 3.0*********************

************* INPUT DATA ***********

 1)PART. DIAMETER    PHYSICAL
 2)DATE OF TEST: 12/14/84
 3)TIME OF TEST: 1413
 4)LOCATION OF TEST: LAB
 5)TEST NUMBER     1  REMARKS:
 6)TEST TYPE          OUTLET
 7)RUN NUMBER: 4-FILE NAME:T1R4.OT
 8)RUN REMARKS: KEEPING OIL LEVEL IN LOWER 1/4 OF HOLE IN REFLECT
10)IMPACTOR TYPE: UW 1-3T7-9
UW V 1(DISK)-3-4-5-6-7-9

 9)WATER VAPOR          .00%
   CO2  1.00%        CO    .00%
   O2  19.00%        N2  80.00%
12)  ORIFICE ID (OPTIONAL): .093A
13)  SUBSTRATE MATERIAL: BARE METAL


 1)GAS METER VOL     10.005 CUBIC FEET
 2)IMPACTOR DELTA P    .00 IN. HG.
 3)ORIFICE DELTA P   -10. INCHES H2O
 4)STACK PRESSURE     .00 INCHES H2O
 5)BAROMETRIC PRES  29.75 INCHES HG
 6)STACK TEMP        75    DEGREES F
 7)METER TEMP        75    DEGREES F
 8)IMPACTOR TEMP     75    DEGREES F
 9)SAMPLE TIME      20.00 MINUTES
10)AVG GAS VEL       1.05 FEET/SEC
11)ORIFICE PRES       .00 INCHES HG
12)NOZZLE DIA         .500 INCHES
13)MAX  PART  DIA   20.00 MICRONS


 MASS GAIN OF STAGE 1     .01 MG
 MASS GAIN OF STAGE 2     .08 MG
 MASS GAIN OF STAGE 3    1.90 MG
 MASS GAIN OF STAGE 4   15.02 MG
 MASS GAIN OF STAGE 5   11.11 MG
 MASS GAIN OF STAGE 6    1.55 MG
 MASS GAIN OF STAGE 7    1.19 MG
 MASS GAIN OF FILTER     1.10 MG

MASS GAIN OF BLANK SUBSTRATE      .00
MASS GAIN OF BLANK FILTER         .00

*********        RESULTS      **********

TEST NUMBER: 1  RUN NUMBER: 4

ACTUAL FLOW RATE            .554 CFM
FLOW RATE AT STANDARD CONDITIONS      .543 CFM
PERCENT ISOKINETIC        365.777 %
VISCOSITY               181.6E-06GM/CM SEC
CALCULATED IMPACTOR DELTA P =  1.46 IN. HG
```

STAGE	CUNN. CORR.	DP (PHYSICAL)	DP (IMP AERO)	CUM FREQ.	RE. NO.	V*D50 UM-M/S
1	1.010	14.330	15.342	99.970	1703	31.6
2	1.033	4.888	4.645	99.725	721	20.6
3	1.046	2.446	2.361	93.926	305	14.1
4	1.107	1.523	1.498	45.635	371	14.1
5	1.159	1.021	1.028	11.722	480	18.5
6	1.219	.747	.771	6.9902	578	20.3
7	1.356	.471	.513	3.3578	763	22.7

TOTAL MASS CONCENTRATION = 1.06E+02 MG/DRY NORMAL CUBIC METER

SPLINE FIT ON PHYSICAL DIAMETER BASIS

PARTICLE DIA. (MICRONS)	CUMFR (STDDEV)	CUMFR (PERCENT)	CUM.MASS (MG/DRY N.CU.METER)	DM/DLOGD
.100	- 2.7424	.31	3.25E-01	1.34E+00
.159	- 2.4715	.47	7.17E-01	2.71E+00
.251	- 2.2007	1.39	1.48E+00	5.11E+00
.398	- 1.9298	2.68	2.86E+00	8.93E+00
.631	- 1.5951	5.53	5.09E+00	2.07E+01
1.000	- 1.2213	11.10	1.18E+01	6.80E+01
1.585	.0316	51.26	5.46E+01	3.49E+02
2.512	1.4264	94.81	1.01E+02	7.40E+01
3.981	2.5437	99.45	1.06E+02	5.08E+00
6.310	2.9950	99.84	1.06E+02	8.08E-01
10.000	3.2542	99.94	1.06E+02	2.09E-01
15.850	3.4177	99.97	1.06E+02	8.98E-02
25.120	1000000	100.00	1.06E+02	0.00E+00
39.810	1000000	100.00	1.06E+02	0.00E+00
63.100	1000000	100.00	1.06E+02	0.00E+00
100.00	1000000	100.00	1.06E+02	0.00E+00
158.50	1000000	100.00	1.06E+02	0.00E+00
251.20	1000000	100.00	1.06E+02	0.00E+00
398.10	1000000	100.00	1.06E+02	0.00E+00
631.00	1000000	100.00	1.06E+02	0.00E+00

Table IV-7. Run Parameters and Results of Impactor Measurements of HCSAG Output Aerosol: Run No. 5.

```
*******************IMPACTOR VERSION 3.0*******************

************* INPUT DATA ***********

 1)PART. DIAMETER     PHYSICAL
 2)DATE OF TEST: 12/14/84
 3)TIME OF TEST: 1500
 4)LOCATION OF TEST: LAB
 5)TEST NUMBER     1  REMARKS:
 6)TEST TYPE          OUTLET
 7)RUN NUMBER: 5-FILE NAME:TIR5.OT
 8)RUN REMARKS: KEEPING OIL LEVEL IN LOWER 1/4 OF HOLE IN REFLECTOR
10)IMPACTOR TYPE: UW 1-3T7-9
UW V 1(DISK)-3-4-5-6-7-9

 9)WATER VAPOR            .00%
    CO2  1.00%          CO    .00%
    O2  19.00%          N2 80.00%
12) ORIFICE ID (OPTIONAL): .093A
13) SUBSTRATE MATERIAL: BARE METAL


 1)GAS METER VOL     10.911 CUBIC FEET
 2)IMPACTOR DELTA P    .00 IN. HG.
 3)ORIFICE DELTA P     .00 INCHES H2O
 4)STACK PRESSURE      .00 INCHES H2O
 5)BAROMETRIC PRES   29.75 INCHES HG
 6)STACK TEMP        75    DEGREES F
 7)METER TEMP        75    DEGREES F
 8)IMPACTOR TEMP     75    DEGREES F
 9)SAMPLE TIME       20.00 MINUTES
10)AVG GAS VEL        1.05 FEET/SEC
11)ORIFICE PRES        .00 INCHES HG
12)NOZZLE DIA          .500 INCHES
13)MAX  PART  DIA    20.00 MICRONS


 MASS GAIN OF STAGE 1     .01 MG
 MASS GAIN OF STAGE 2     .12 MG
 MASS GAIN OF STAGE 3    1.92 MG
 MASS GAIN OF STAGE 4   20.18 MG
 MASS GAIN OF STAGE 5   12.92 MG
 MASS GAIN OF STAGE 6    3.19 MG
 MASS GAIN OF STAGE 7    1.51 MG
 MASS GAIN OF FILTER      .40 MG

MASS GAIN OF BLANK SUBSTRATE      .00
MASS GAIN OF BLANK FILTER         .00

*********        RESULTS      **********

TEST NUMBER: 1  RUN NUMBER: 5

ACTUAL FLOW RATE            .546 CFM
FLOW RATE AT STANDARD CONDITIONS      .535 CFM
PERCENT ISOKINETIC        340.456 %
VISCOSITY              181.6E-06GM/CM SEC
CALCULATED IMPACTOR DELTA P =  1.42 IN. HG
```

STAGE	CUNN. CORR.	DP (PHYSICAL)	DP (IMP AERO)	CUM FREQ.	RE. NO.	V=D50 UM-M/S
1	1.010	16.451	15.455	99.975	1670	31.4
2	1.033	4.925	4.679	99.677	711	20.5
3	1.066	2.468	2.381	94.907	381	14.0
4	1.104	1.538	1.512	44.770	366	16.1
5	1.150	1.032	1.038	12.671	473	18.4
6	1.217	.755	.778	4.7453	570	20.2
7	1.352	.476	.517	.9938	752	22.6

TOTAL MASS CONCENTRATION = 1.33E+02 MG/DRY NORMAL CUBIC METER

SPLINE FIT ON PHYSICAL DIAMETER BASIS

PARTICLE DIA. (MICRONS)	CUMFR (STDDEV)	CUMFR (PERCENT)	CUM.MASS (MG/DRY N.CU.METER)	DM/DLOGD
.100	- 4.0729	.00	3.11E-03	3.41E-02
.159	- 3.5580	.02	2.90E-02	2.43E-01
.251	- 3.0433	.12	1.56E-01	1.33E+00
.398	- 2.5287	.57	7.61E-01	5.57E+00
.631	- 1.9347	2.65	3.52E+00	2.69E+01
1.000	- 1.2010	11.49	1.52E+01	1.10E+02
1.585	- .0266	48.94	6.50E+01	4.32E+02
2.512	1.6911	95.46	1.27E+02	8.79E+01
3.981	2.5440	99.45	1.32E+02	4.86E+00
6.310	2.9003	99.81	1.32E+02	1.24E+00
10.000	3.1934	99.93	1.33E+02	4.47E-01
15.850	3.4614	99.97	1.33E+02	1.74E-01
25.120	1000000	100.00	1.33E+02	0.00E+00
39.810	1000000	100.00	1.33E+02	0.00E+00
63.100	1000000	100.00	1.33E+02	0.00E+00
100.00	1000000	100.00	1.33E+02	0.00E+00
158.50	1000000	100.00	1.33E+02	0.00E+00
251.20	1000000	100.00	1.33E+02	0.00E+00
398.10	1000000	100.00	1.33E+02	0.00E+00
631.00	1000000	100.00	1.33E+02	0.00E+00

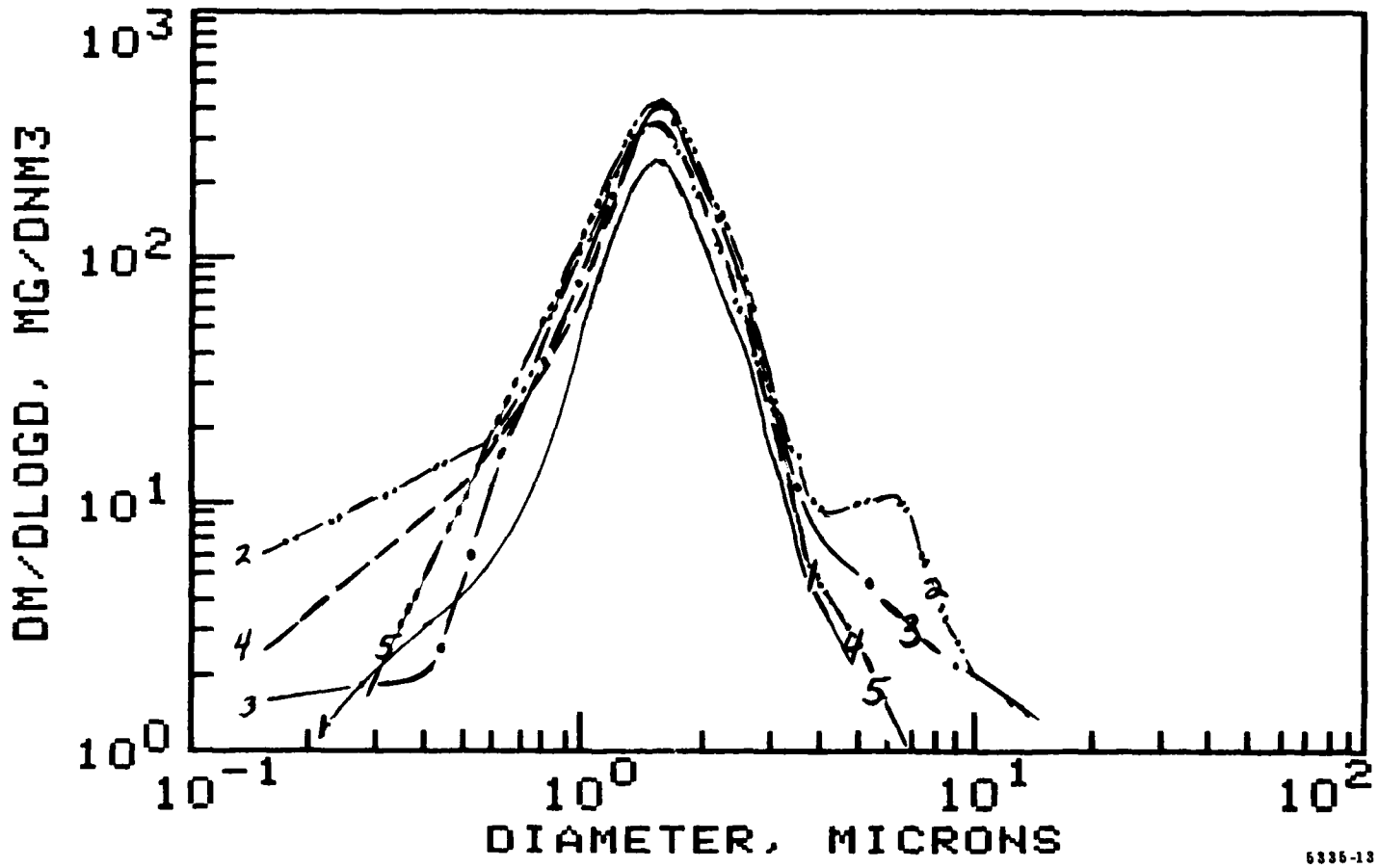

Figure IV-1. Results of impactor runs sampling HCSAG output.

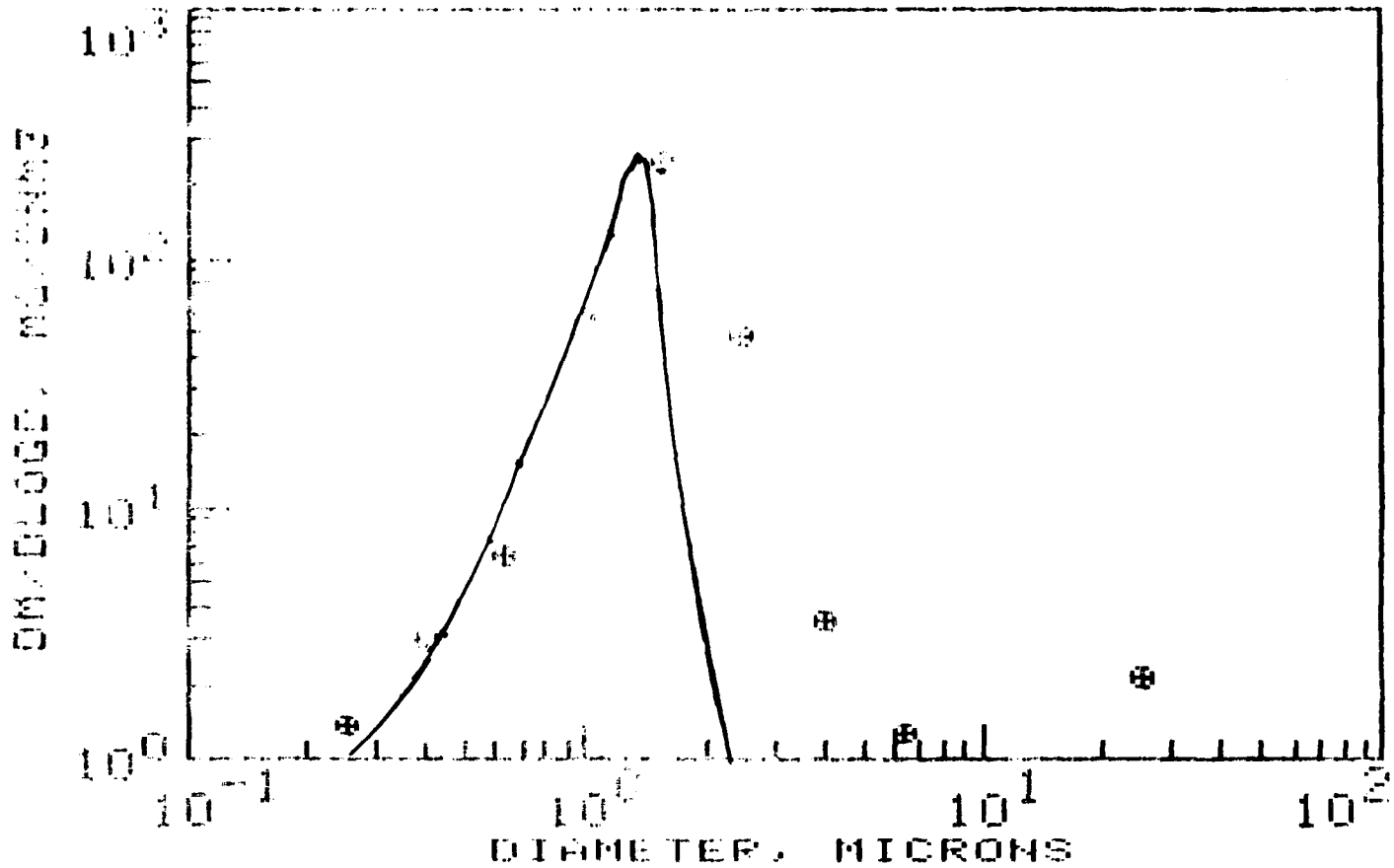

Figure IV-2. Size distribution of HCSAG aerosol mesaured simultaneously with impactor (O) and Climet (—).

V. Operating Instructions

These instructions assume that the reader is familiar with the HCSAG and the nomenclature and figures of Section III. For illustrative purposes it is assumed that the conditions or operating parameters of Table IV-1 are to be achieved. It is assumed that a compressed air supply and shut-off valve has been connected to the main inlet to the HCSAG at the lower left corner near the front panel. Keep this shut-off valve closed until preparatory steps described below are achieved.

A. Precautions

The most important precaution is that no parts of the system downstream of pressure regulators and control valves be pressurized at more than 16 PSIG. This means that all pressure meters on the front panel should be kept below 16 PSIG except P_{GJETS} and P_{MAIN}. If the outlets of the system are closed off for any reason then these two gauges cannot exceed 16 PSIG. Thus some care should be exercised to turn the main pressure regulator, P_{MAIN}, on slowly while watching the pressure gauges on the front panel.

B. Preparation

1. The drain bottles for the inlet chamber to VP1 and for the coalescing filters on Q_{1D} and Q_{2D} should be emptied. They are located at the right end of the system beside the PAG canister. (Emptying of the other bottles is discussed in the next section on Maintenance.)

2. The oil in the lower reservoir (No. 2) should be pumped up to the upper reservoir. Check the level in the upper reservoir to determine if liquid should be added. The system uses about one inch per hour. Oil is added by disconnecting the tygon tubing leading from the peristaltic pump to the top reservoir. The joint between the curved tube and the elbow fitting at the top of reservoir No. 1 (see Figure III-4) is convenient.

3. Check the level of liquid in reservoir No. 3. It should be at or near the top of the overflow tube. If it is not then open the control valve (several turns) at the bottom of the top reservoir (No. 1) to allow liquid to transfer.

4. Check the liquid level in the site glass on the front panel. Liquid should be visible but not higher than 2/3 of the distance from the bottom of the site glass to the hole at the center of the reflector. If the level is too high then carry out the following steps:

   - close the aerosol generator valve,
   - turn the P_{oil} regulator to zero (counter clockwise until the knob is loose),
   - open the connection normally used for putting liquid into the top reservoir,

- open the exhaust rotameter valve, if it is connected,
- turn the main regulator to zero,
- turn the air supply on,
- close the valve on the Q_{add} rotameter until liquid in the PAG starts flowing into reservoir No. 3. This can be seen by looking at the liquid line between these two components,
- if nothing happens check the regulator for the Q_{add} line and open it if it is not already open,
- when the level in the site glass drops below the appropriate height, turn off the Q_{add} valve and turn off the P_{MAIN} regulator,
- reconnect the liquid line at the top of reservoir No. 1.

5. It is very helpful to have an optical particle counter ready to sample from the HCSAG output to optimize final adjustments based on the output size distribution and concentration.

6. If the operating conditions from the last usage of the system were normal and no valves have been changed, then open the shut-off valve of the compressed air supply and proceed to "Initiating Operation" below. If the position of the controls are uncertain then perform the following steps:

   - close all valves on the front panel except Q_{1D}, Q_{2D}, and Q_{HD} (which should be open) and turn all pressure regulators to zero (counter clockwise until loose),
   - open the shut-off valve controlling the compressed air supply,
   - turn the P_{MAIN} regulator to 50 PSIG and turn all other regulators to 45 PSIG, <u>except for the P_{oil} and P_{GJETS} regulators</u>; P_{oil} should remain at zero while P_{GJETS} should be adjusted to 35 PSIG,
   - turn P_{MAIN} to 60 PSIG,
   - adjust Q_{core}, Q_{SH}, and Q_I to about 20, 5, and 40 PSIG, respectively.

C. Initiating Operation

With P_{MAIN} at 60 PSIG and Q_{core}, Q_{SH}, and Q_I at about 20, 5, and 40 PSIG, respectively, open the ball valve on the front panel controlling the PAG (full open). The immediately adjust the P_{oil} regulator to about 10" H_2O, returning to readjust it while adjustments of other valves are being performed. At this time P_{GJETS}, P_{GEN}, P_1, ΔP_1, P_2, and ΔP_2 should be near the values given in Table IV-1. If not, then review the steps to this point and check the system for abnormal signs.

Adjustments to achieve the appropriate values of the other parameters require an iterative approach. Q_{2D}, Q_{core}, Q_{SH}, Q_{HD}, and Q_I are relatively insensitive to the others so adjust those first. This should cause P_3, ΔP_3, P_I, and ΔP_I to be near the appropriate values. If not, readjust those valves. It is important to be familiar with the plumbing or have Figure III-1 at hand and to keep in mind that the appropriate values of Q_{2T} and Q_{HT} are attained when near balance pressures exist. Next, slightly adjust Q_{2D}, Q_{core}, and Q_{SH} to obtain the appropriate value of ΔP_V. Small deviations of Q_{2D} do not effect the output. Set points of ΔP_V, Q_{core}, and Q_{SH}

are more important. Finally, adjust Q_{HD} and Q_I to obtain a positive ΔP_{HT} in the given range.

Next, review the meters for a value that deviates by more than 5% from the appropriate value, excluding ΔP_{HT}. If a larger deviation is found repeat the adjustment procedure starting with Q_{2D}, Q_{core}, Q_{SH}, Q_{HD}, and Q_I.

Perform final adjustments of Q_I and Q_{HD} optimizing the output distribution measured with an optical particle counter, if available.

Adjust P_{oil} to establish and keep the level in the site glass at the lower edge of the hole in the center of the reflector.

D. Continued Operation

Once the adjustments described above are performed, long-term operation can be expected. The drain bottles should be checked and the liquid level in the PAG adjusted as needed. The system has not gone through extensive testing needed to establish a ΔP_{oil} for an absolutely constant liquid level.

E. Halting Operation

When operation is completed the only step necessary for the HCSAG is to close the compressed air supply shut-off valve or turn the P_{MAIN} regulator to zero. If all other valves are left in the same position then adjustments are not needed in the next period of operation except for ΔP_{oil}. The operator will likely wish to adjust it to reestablish the appropriate liquid level in the PAG.

VI. Maintenance

A. Drain Bottles

Some of the drain bottles have an air relief tube on the side of the bottle as well as a tube for liquid to enter through the cap. One of the tubes must be disconnected from the system to twist the cap or the bottle. For three of the bottles the tube that is disconnected must be the air relief tube so that wicks will not be disturbed, potentially disrupting proper operation of the system.

One of the bottles that is connected to the union cross fitting just upstream of the venturi is shown in Figure III-9. A wick made of blotting paper extends along the lower wall of the token flow tube from VP2 to the union cross and down in the bottom leg to which the bottle is attached. Care should be exercised to refrain from rotating this cross or the bottle caps, thus tearing the wick. The top leg of the union cross can be disconnected to permit turning of the bottle while holding the cap steady. Only one full turn is necessary.

The second bottle of concern is the one which catches liquid drained from the entrance to VP3. A safe way to remove this bottle for emptying would be to detach the air relief tube at the side of the bottle. Then the bottle can be turned while holding the cap and wick steady. A suitable loose clamp must be used to resecure the air relief tube to the side of the bottle.

The third bottle of concern is that catching liquid drained from the union cross in the token flow, Q_{HT}, of VP3. This cross has a wick extend back to VP3 like the one upstream of the venturi. The top leg of this cross can also be disconnected to permit turning of the bottle while holding the cap steady. Care must be exercised to refrain from rotating the union cross.

B. Orientation of Components

The orientation of components relative to the horizontal plane is also important for drainage. The VP1-VP2 unit should be tilted slightly rising toward the downstream direction. The venturi should be in the horizontal plane. The VP3 and OP components should be essentially horizontal, rising slightly toward downstream rather than the opposite.

C. High Values of ΔP_{AC} and ΔP_{AS}

If ΔP_{AC} or ΔP_{AS} rise with use to high values then their respective flows are being obstructed, probably by liquid in laminar flow rings or screens. It is possible that this symptom can be eliminated by drainage given several days without operation. High flowrates of clean air in the reverse direction through these elements would augment the drainage process.

VII. Extending Performance

A. Other Liquids

If it is desired to use liquids other than the DuoSeal Vacuum Pump Oil in the HCSAG, several factors need to be checked to verify the feasibility. Appendix B gives physical and chemical properties of nonmetalic materials used in the system. Metal parts are made of aluminum, nickel plated brass, and stainless steel. If the user is uncertain after considering resistance of these materials to the liquid of interest, it is suggested that tests be performed exposing samples of the materials to the liquid. In addition to signs of corrosion, check for softening, swelling, or shrinking of plastic materials.

In addition to material problems, many liquids are extremely flammable or explosive when aerosolized. This can be checked by putting a small amount into a nebulizer and routing the aerosol stream through small tubing. If the aerosol exiting the tubing can be ignited, it will be hazardous to use in the HCSAG.

B. Increasing Concentration of Output Aerosol

Wall losses could probably be reduced in the system giving higher output concentrations by increasing the number of jets in VP1 and VP2. This redesign would decrease the pressures needed throughout the system eliminating that needed for the pressure letdown orifice PLDO and reducing the turbulence in the system.

VIII. References

1. Berglund, R. N. and B. Y. H. Liu. "Generation of Monodisperse Aerosol Standards," Env. Sci. Tech., 7(2): 147-153, 1973.

2. Service Manual - IBM Office System 6 Ink Jet Printer 500. International Business Machines Corporation Form No. 241-6201-0.

3. Liu, B. Y. N., K. T. Whitby, and H. H. S. Yu. A Condensation Aerosol Generator for Producing Monodispersed Aerosols in the Size Range 0.036 to 1.3 Microns. J. de Recherches Atmospheriques, pp. 397-406, 1966.

4. Particle Technology Instruments. Thermo Systems Incorporated, St. Paul, MN. Form No. TSI 3000-R681 8M-2MBRI.

5. Masuda, H., D. Hochrainer, and W. Stober. An Improved Virtual Impactor for Particle Classification and Generation of Test Aerosols with Narrow Size Distribution. J. Aerosol Sci., 10: 275-287, 1978.

6. Conner, W. D., "An Inertial-Type Particle Separator for Collecting Large Samples," J. Air Poll. Contr., 16(1):35-39, 1965.

Appendix A Drawings of Noncommercial Components

FIND NO	PART NO	REQ'D	DESCRIPTION	MATERIAL
1		1	UNION CROSS 12mm LGA BRASS # B-12MO-4	
			B'HAM VALVE & FITTING	
2		1	VENTURI 12mm OPENING	
			FOX VALVE DEVELOPEMENT CORP	
3		1	UNION 12mm BRASS # B-12MO-6 B'HAM VALVE	
4		1	VIRTUAL IMPACTOR ITA GRAFSCHAFT	
5		1	TUBING 12mm OD x 1mm WALL S.S. A/R	
6		2	TUBING 12mm O.D. x 1mm WALL S.S. 2" L	
7		3	TUBING 12mm O.D. x 1mm WALL S.S. 1 5/16" L	

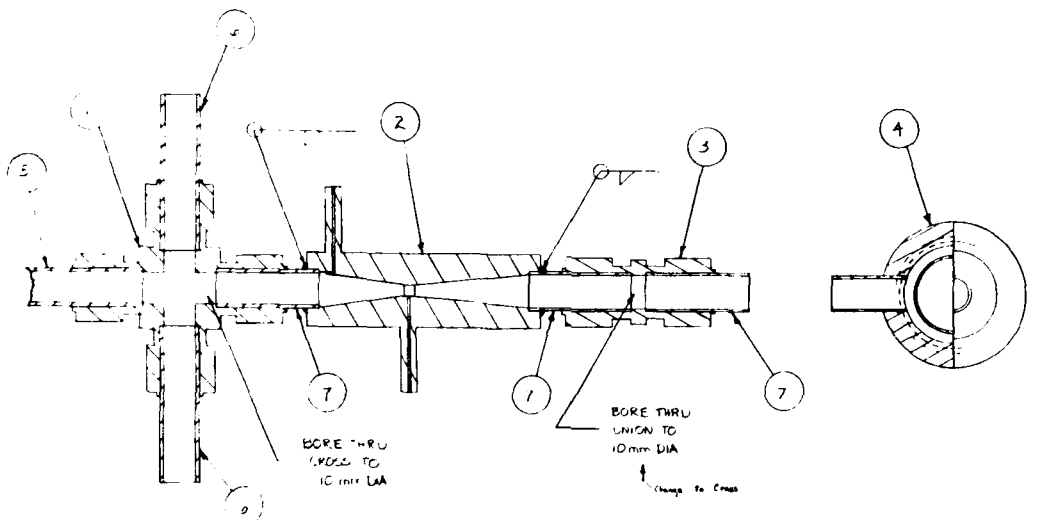

REV	DESCRIPTION	DATE	BY

REVISIONS

UNLESS OTHERWISE SPECIFIED
DIMENSIONS IN INCHES
TOLERANCES ON
FRACTIONS ANGLES
DECIMALS
X XX XXX
± .05 ± .010

REQ BY
ENGR
DFTMN
CHK
PROJ
APPD
DATE

Southern Research Institute
BIRMINGHAM, ALABAMA 35255

SIZE C DWG NO REV
SCALE SHEET

NEXT ASSY QTY

FIND NO	PART NO	REQ'D	DESCRIPTION	MATERIAL
	-201	1	7" DIA x 1/4" DEPTH	6061-T6 Al plate (1/4")
	-202	1	7" DIA x 1/4" DEPTH	6061-T6 Al plate (1/4")
	203	9	Parker 2-017 "O"-Ring	Silicone

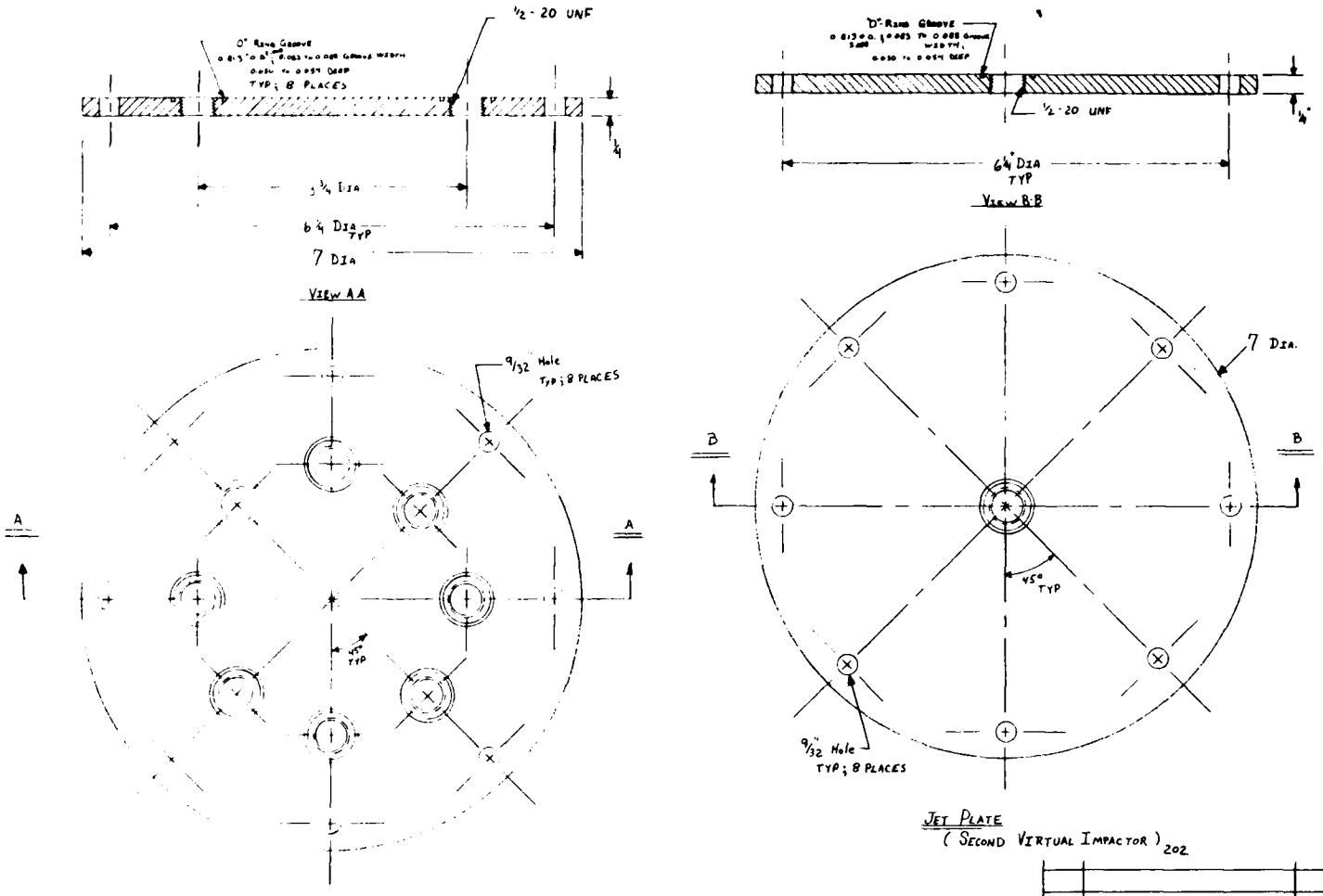

JET PLATE
(FIRST VIRTUAL IMPACTOR) 201

JET PLATE
(SECOND VIRTUAL IMPACTOR) 202

REV	DESCRIPTION	DATE	BY

REVISIONS

NEXT ASSY	QTY

UNLESS OTHERWISE SPECIFIED DIMENSIONS IN INCHES TOLERANCES ON
FRACTIONS ANGLES
DECIMALS
X XX ±.05 XXX ±.010 ±.002

REQ BY W. Fuehling
ENGR R. MARTIN
DFTMN R. MARTIN
CHK
PROJ
APPD
DATE 2-19-84

Southern Research Institute
BIRMINGHAM, ALABAMA 35255

HIGH CONCENTRATION STANDARD AEROSOL GENERATOR
REMOVABLE JET PLATES

SIZE C DWG NO 5335-C-02 REV
SCALE 1:1 SHEET

FIND NO	PART NO	REQD	DESCRIPTION	MATERIAL
	5335-301	1	7" DIA × 1/8" THICK	6061-6T Al Plate (1/8")
	5335-302	1	7" DIA × 1/8" THICK	6061-6T Al Plate (1/8")

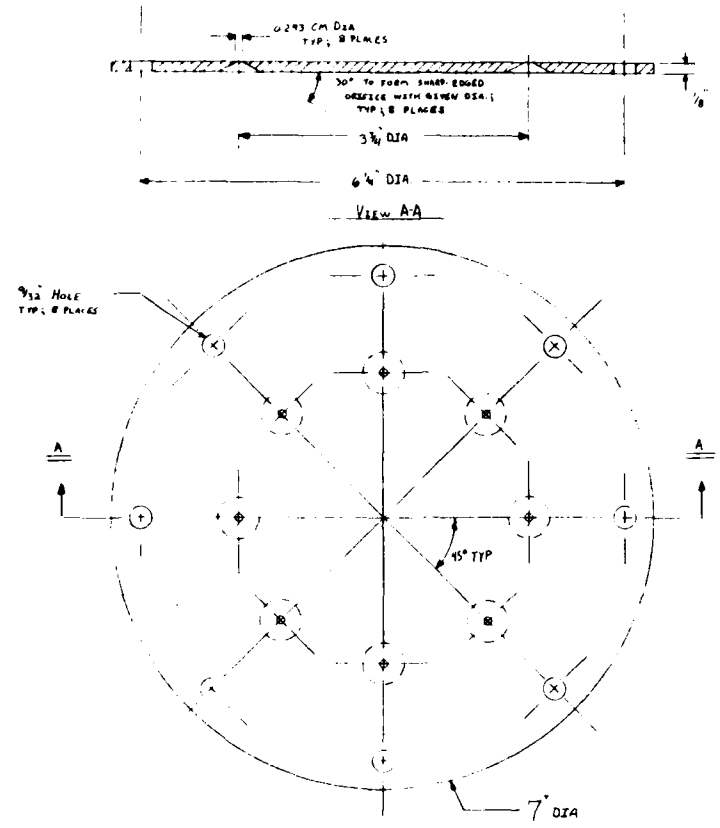

IMPACTION PLATE
(FIRST VIRTUAL IMPACTOR) 301

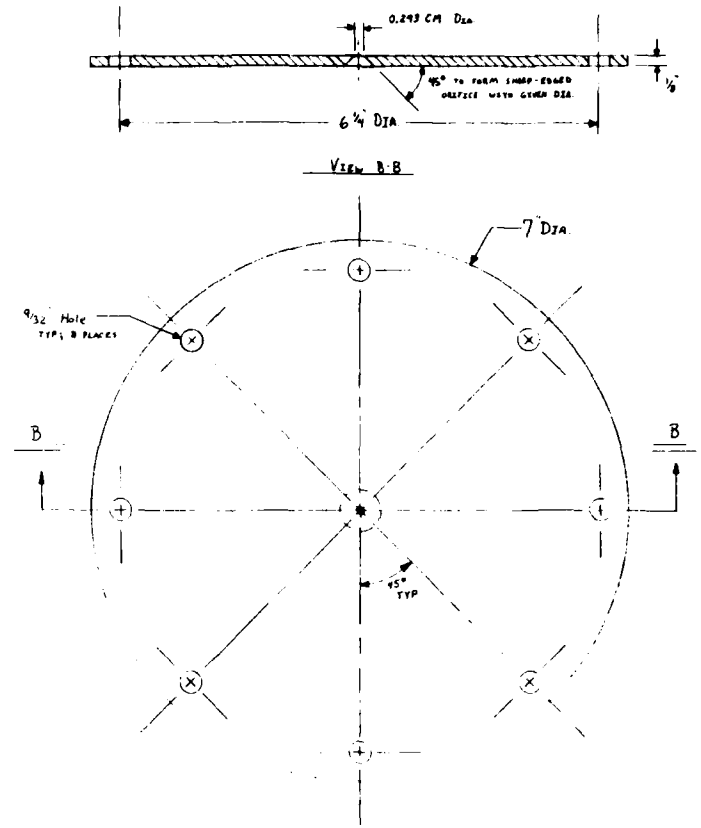

IMPACTION PLATE
(SECOND VIRTUAL IMPACTOR) 302

REV	DESCRIPTION	DATE	BY

REVISIONS

NEXT ASSY	QTY

UNLESS OTHERWISE SPECIFIED DIMENSIONS IN INCHES TOLERANCES ON
FRACTIONS ANGLES
DECIMALS
X XX XXX
±.05 ±.010 ±.002

REQ BY W. FARNSWORTH
ENGR R. Martin
DFTMN R. Martin
CHK
PROJ
APPD
DATE 2-20-84

Southern Research Institute
BIRMINGHAM, ALABAMA 35205

HIGH CONCENTRATION STANDARD AEROSOL GENERATOR
VIRTUAL IMPACTOR IMPACTION PLATES

SIZE C DWG NO 5335-C-03 REV
SCALE 1:1 SHEET

FIND NO	PART NO	REQ'D	DESCRIPTION	MATERIAL
	-401	1	7" O.D. × 5" I.D. × 1" INSIDE 6061-T6511 AL EXTRUDED MECHANICAL TUBING	
	-402	2	Parker 2-160 O-RING	Silicone

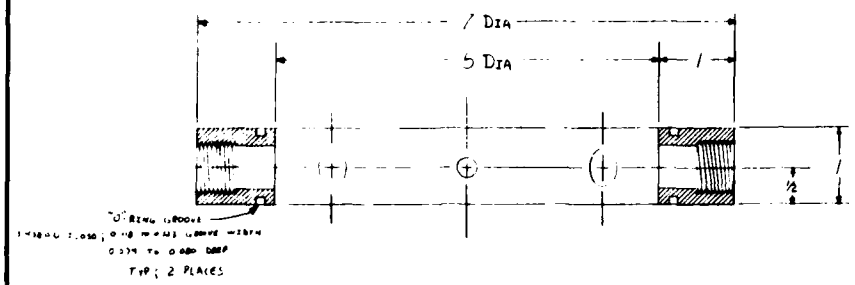

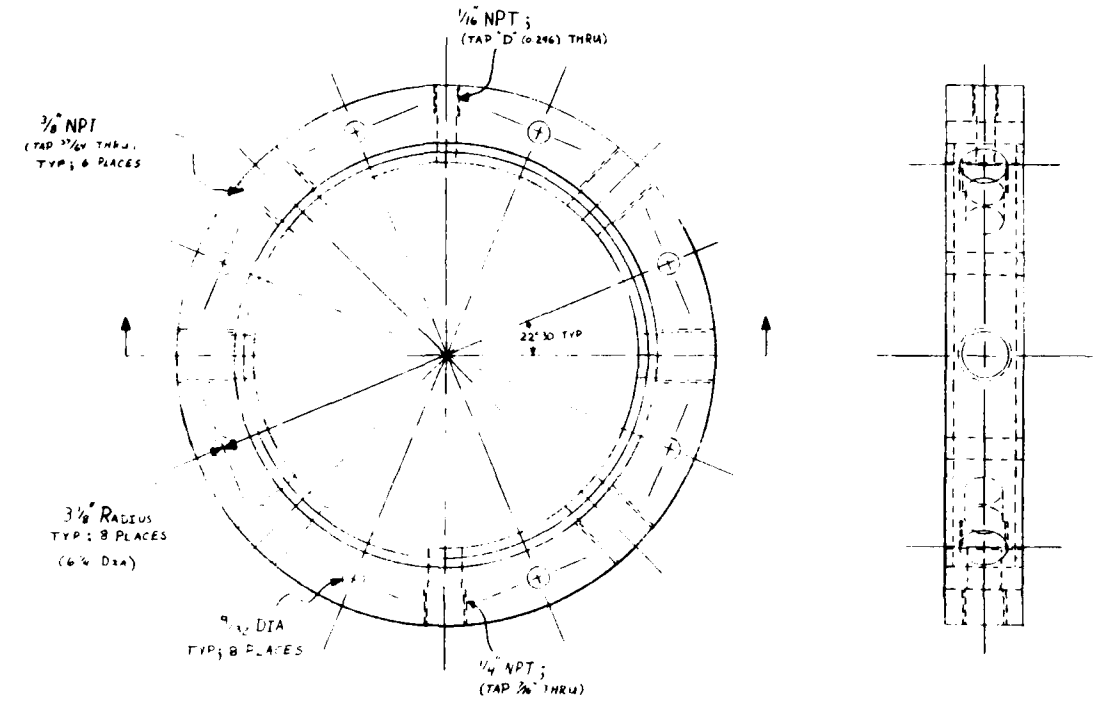

SPACING FLANGE
(FIRST VIRTUAL IMPACTOR) 401

REV	DESCRIPTION	DATE	BY
	REVISIONS		

NEXT ASSY	QTY

UNLESS OTHERWISE SPECIFIED DIMENSIONS IN INCHES TOLERANCES ON
FRACTIONS ANGLES
DECIMALS
X ±.05 XX ±.010 XXX ±.010

REQ BY W. Tarthung
ENGR R. Martin
DFTMN R. Martin
CHK
PROJ
APPD
DATE 2-18-84

Southern Research Institute
BIRMINGHAM, ALABAMA 35205

HIGH CONCENTRATION STANDARD AEROSOL GENERATOR
FIRST VIRTUAL IMPACTOR SPACING FLANGE

SIZE C DWG NO 5335-C-04 REV
SCALE 1:1 SHEET

FWD NO	PART NO	REQ'D	DESCRIPTION	MATERIAL
	501	1	7" OD × 5" ID × 3/4" Bp	6061-T6511 Al
			Extruded Mechanical Tubing	
	502	2	Parker 2-160 "O" Ring	Silicone

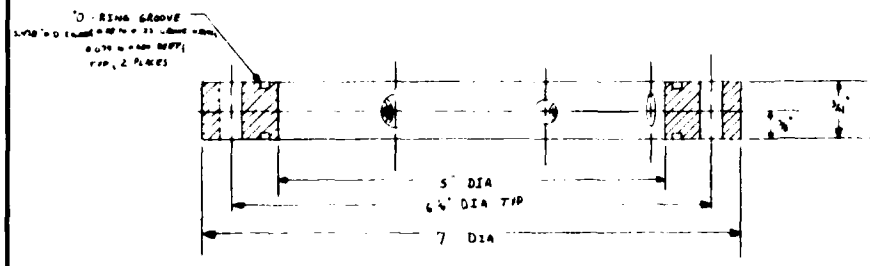

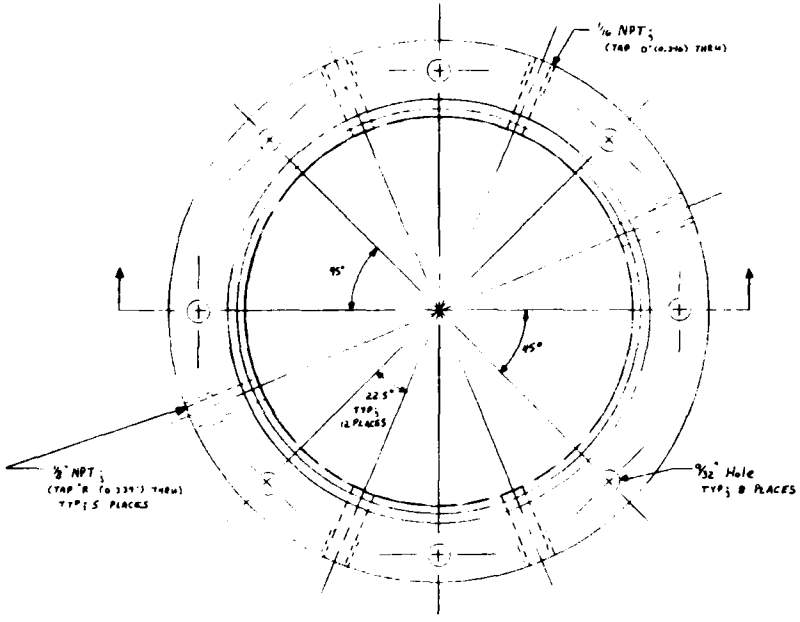

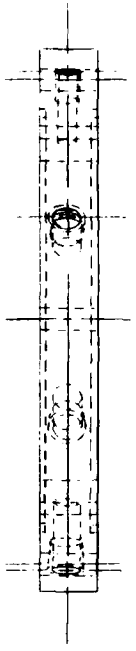

SPACING FLANGE
(SECOND VIRTUAL IMPACTOR) 501

REV	DESCRIPTION	DATE	BY
	REVISIONS		

NEXT ASSY	QTY

UNLESS OTHERWISE SPECIFIED DIMENSIONS IN INCHES TOLERANCES ON
FRACTIONS ANGLES
DECIMALS
X XX XXX
±.05 ±.010

REQ BY	W. Fretzen
ENGR	R. Martin
DFTMN	R. Martin
CHK	
PROJ	
APPD	
DATE	2-21-84

Southern Research Institute
BIRMINGHAM, ALABAMA 35205

HIGH CONCENTRATION STANDARD AEROSOL GENERATOR
SECOND VIRTUAL IMPACTOR SPACING FLANGE

SIZE	DWG NO	REV
C	5335-C-05	
SCALE 1:1		SHEET

	FIND NO	PART NO	REQ'D	DESCRIPTION	MATERIAL
703		-701	1	7" o.d. × ½" I.D.	316 S.S.
		-702	1	2 o.d. × .109" w.t. × 2" L	316 S.S.

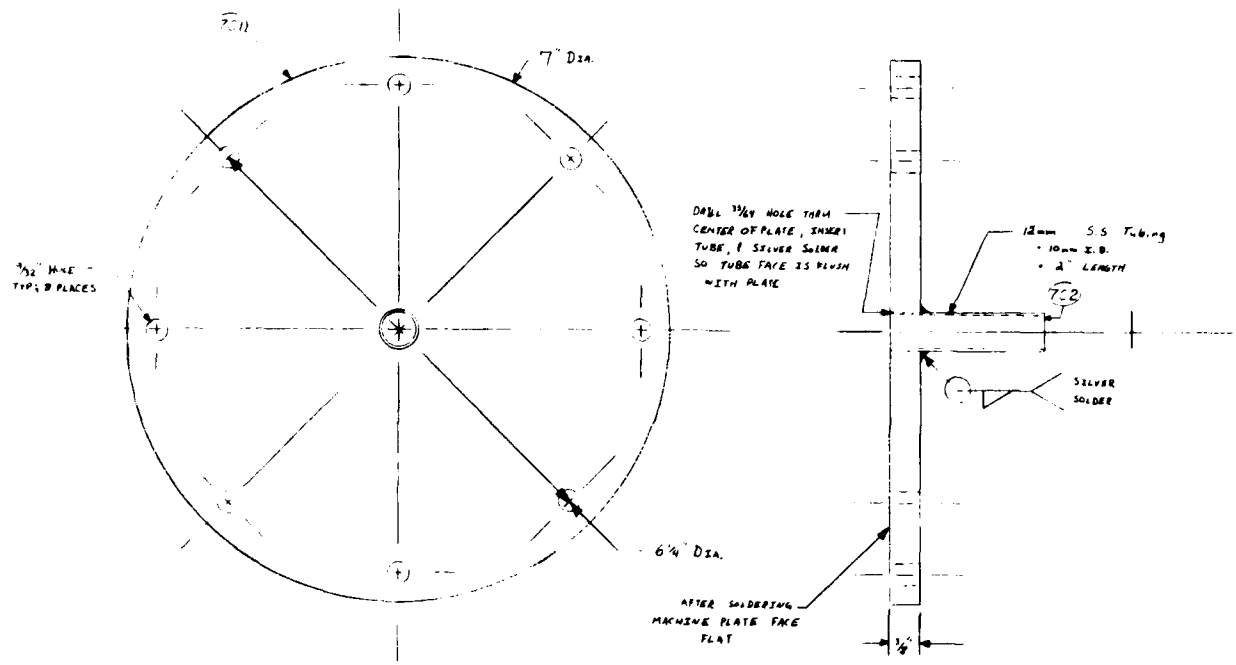

VIRTUAL IMPACTOR OUTLET

703

REV	DESCRIPTION	DATE	BY

REVISIONS

NEXT ASSY	QTY

UNLESS OTHERWISE SPECIFIED DIMENSIONS IN INCHES TOLERANCES ON FRACTIONS ANGLES DECIMALS X ±.05 XX ±.010 XXX

REQ BY W. FARTHING
ENGR R. MARTIN
DFTMN R. MARTIN
CHK
PROJ 5335
APPD
DATE 2-21-84

Southern Research Institute
BIRMINGHAM, ALABAMA 35205

MEAN CONCENTRATION STANDARD AEROSOL GENERATOR
VIRTUAL IMPACTOR OUTLET

SIZE C DWG NO 5335-C-07 REV

SCALE 1:1 SHEET

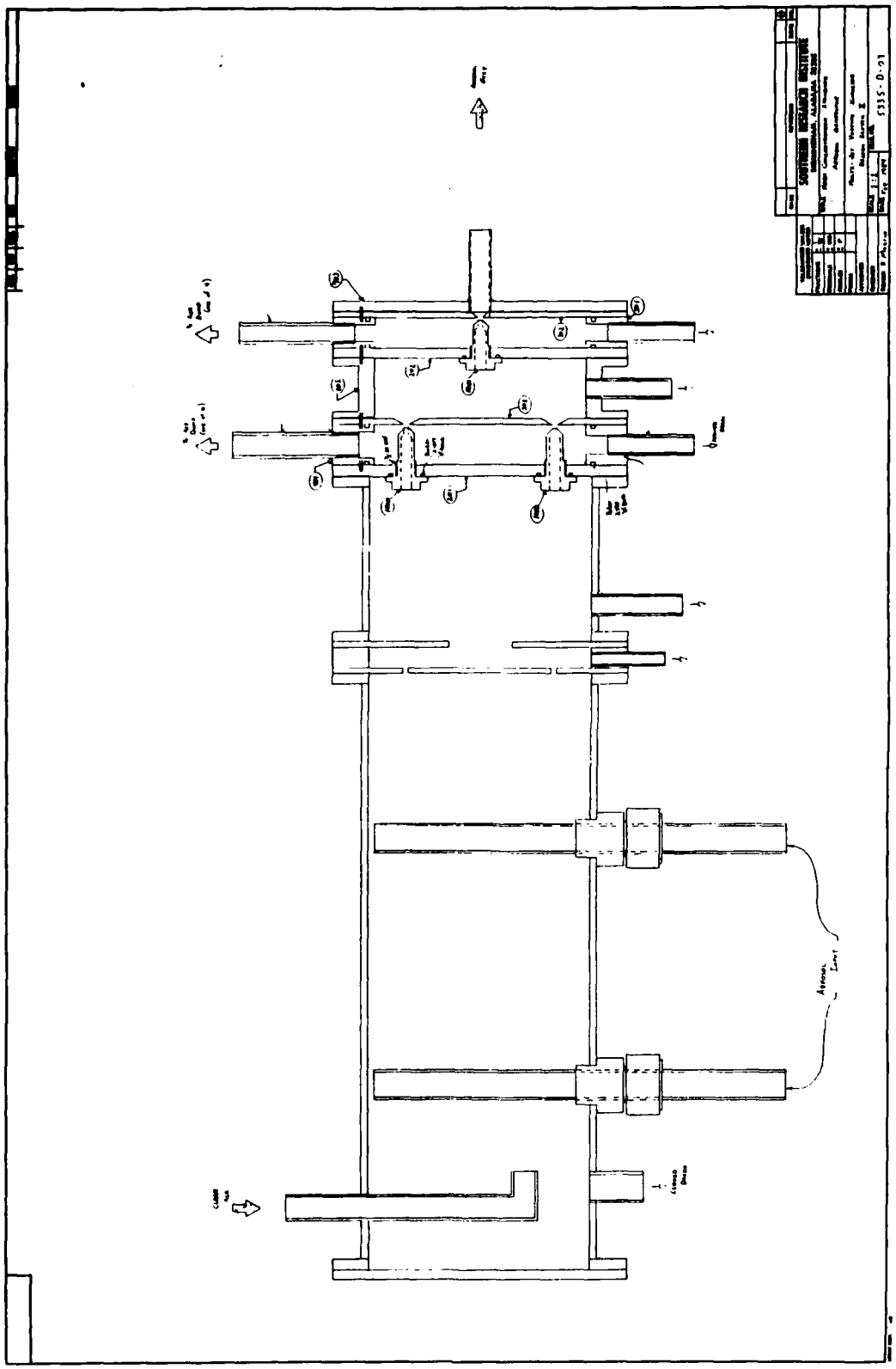

ASSY.	ITEM	QUAN.	NAME	DESCRIPTION	MATERIAL
1003	1001	9	Straight Thread Adapter	CAJON	B-S-TA-OR-ST
	1002	9	JET CONE	7/16 DIA × .368" L	Brass

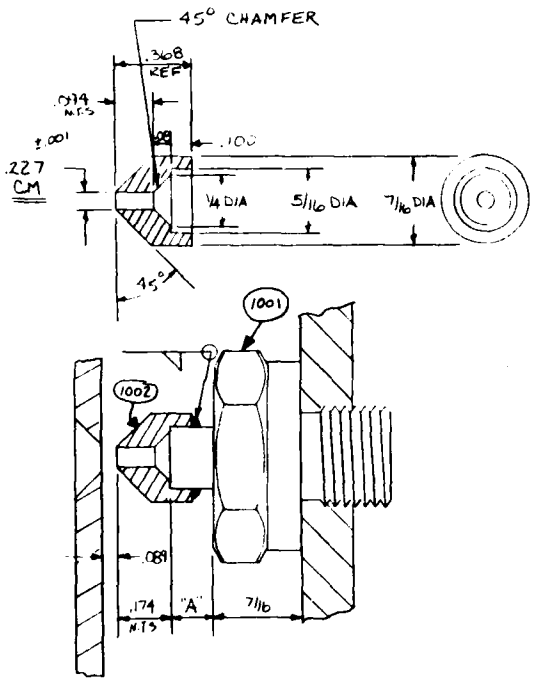

JET ASSEMBLY 1003

	A
8 JETS	.3
1 JET	.05

DATE	REVISIONS	ZONE	NO.

TOLERANCES UNLESS OTHERWISE NOTED		
FRACTIONS	± 1/32	1/64
DECIMALS	± .010	.002
ANGLES	± 1°	
FINISH		
APPROVED		
CHECKED		
DRAWN		

SOUTHERN RESEARCH INSTITUTE
BIRMINGHAM, ALABAMA 35205

TITLE HIGH CONCENTRATION STANDARD AEROSOL GENERATOR

VIRTUAL IMPACTOR JETS

SCALE 2X | DWG. NO. 5335 -B- 10
DATE

SPERRY CORP. 4-76

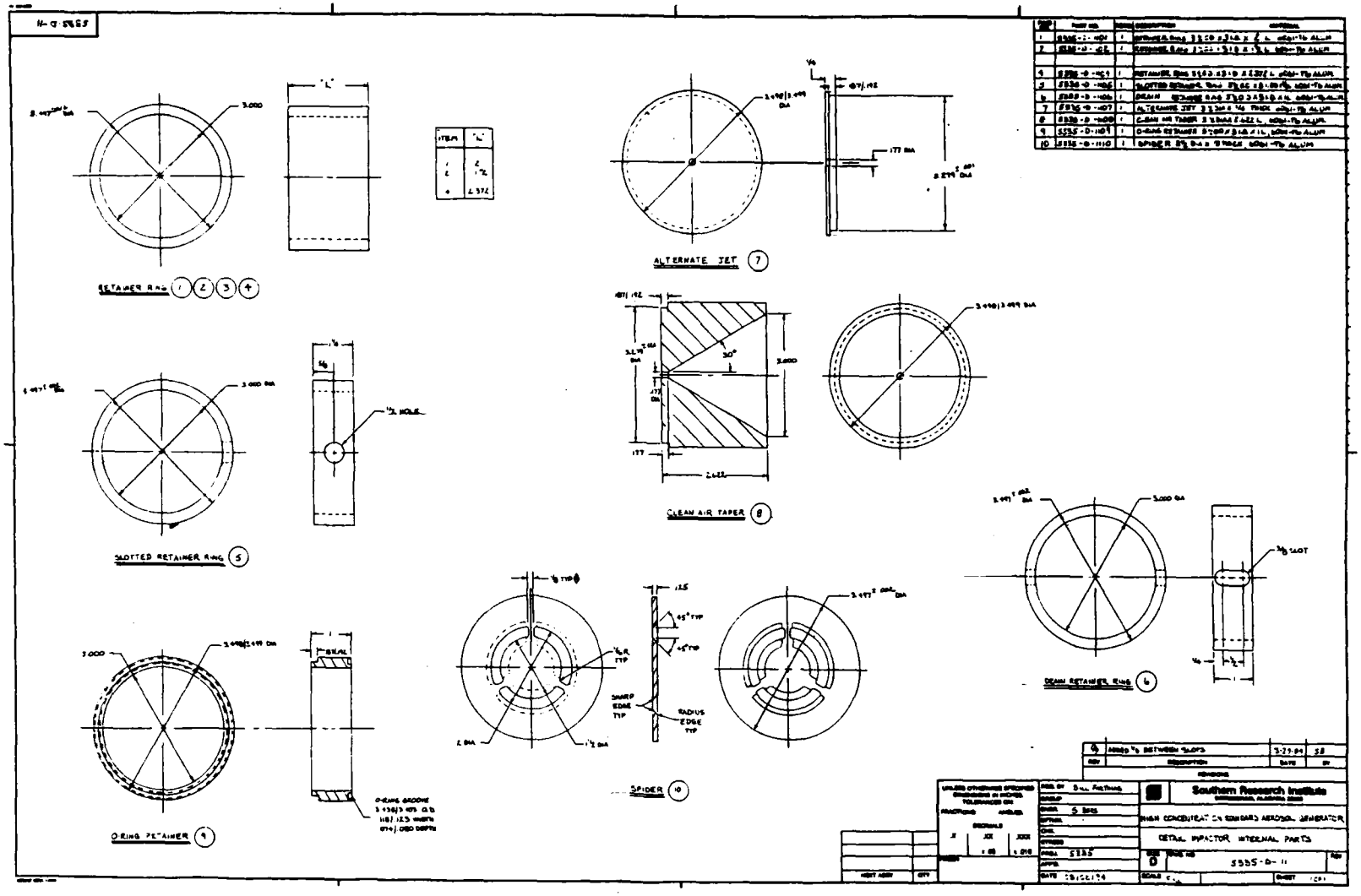
RETAINER RING (1)(2)(3)(4)
ALTERNATE JET (7)
SLOTTED RETAINER RING (5)
CLEAN AIR TAPER (8)
DRAIN RETAINER RING (6)
O-RING RETAINER (9)
SPIDER (10)
Southern Research Institute
DETAIL IMPACTOR INTERNAL PARTS
5555-D-11

FIND NO	PART NO	REQ'D	DESCRIPTION	MATERIAL
1	5335-C-1201	1	SHELL, 4 OD x 3 1/2 ID x 9.447 L, 6061-T6	ALUMINUM

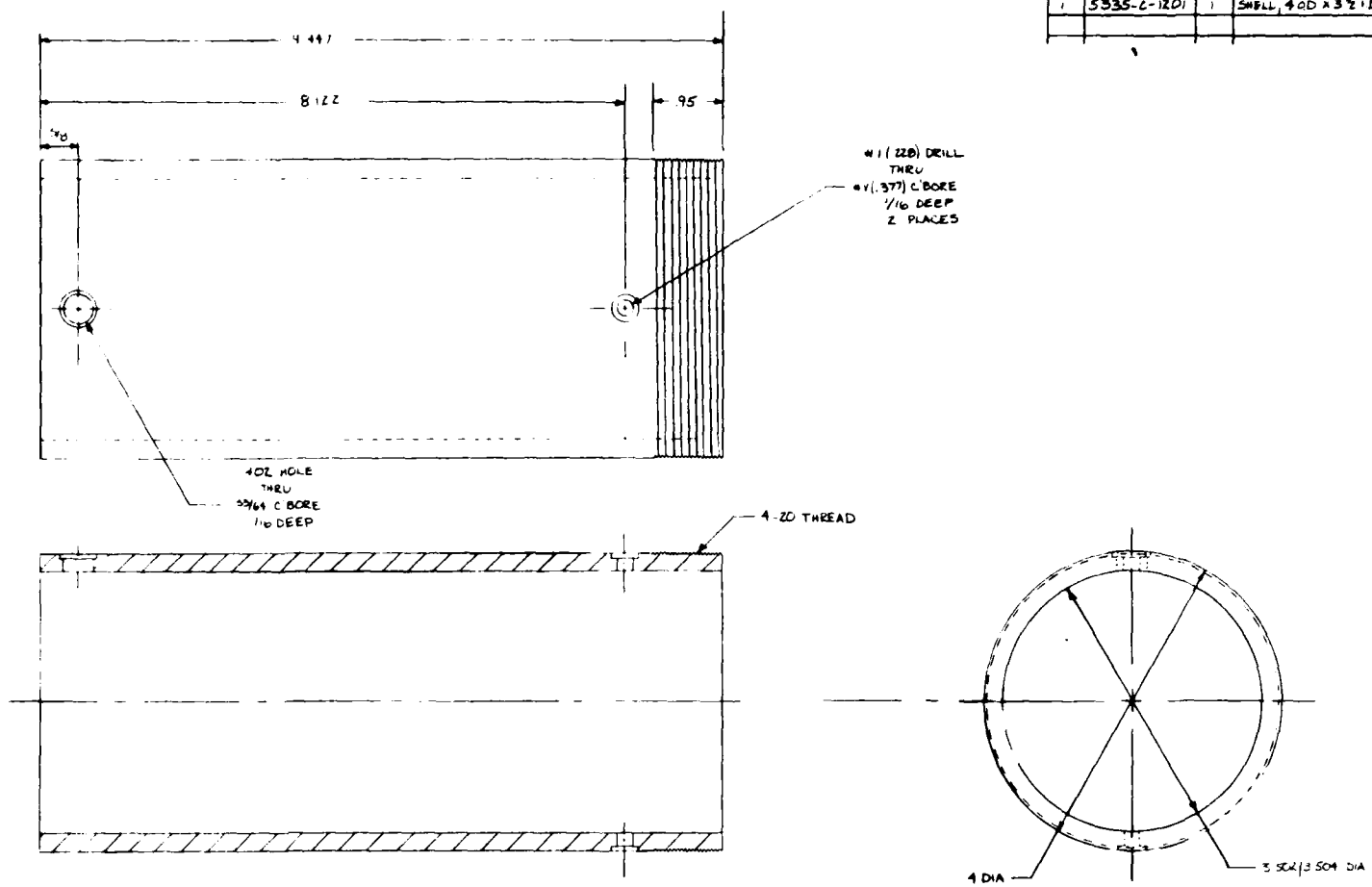

SHELL, LAST IMPACTOR (1)

REV	DESCRIPTION	DATE	BY

REVISIONS

NEXT ASSY	QTY

UNLESS OTHERWISE SPECIFIED DIMENSIONS IN INCHES TOLERANCES ON FRACTIONS ANGLES DECIMALS X ± .05 XX ± .010 XXX ± .010

REQ BY Bill Farthing
ENGR S Berg
DFTMN
CHK
PROJ 5335
APPD
DATE 03/07/84

Southern Research Institute
BIRMINGHAM, ALABAMA 35205

HIGH CONCENTRATION STANDARD AEROSOL GENERATOR
SHELL, LAST IMPACTOR

SIZE C DWG NO 5335-C-12 REV
SCALE FULL SHEET 1 OF 1

	FIND NO	PART NO	REQ'D	DESCRIPTION	MATERIAL
A	1	5335-C-1301	1	THREADED COLLAR, 4 1/2 DIA x 7/8 L	BRASS
	2	5335-C-1302	1	CAP TOP, 4 1/2 DIA x 1/4 TH	BRASS
	3	5335-C-1303	1	TUBE, 1/2 O.D. x .049 WALL x 2 L	BRASS

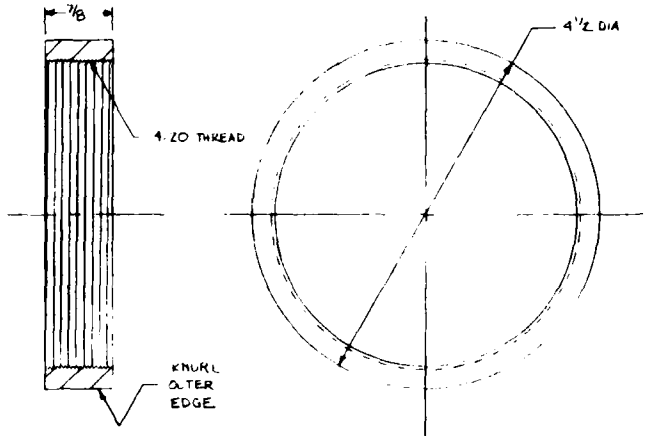

THREADED COLLAR (1)

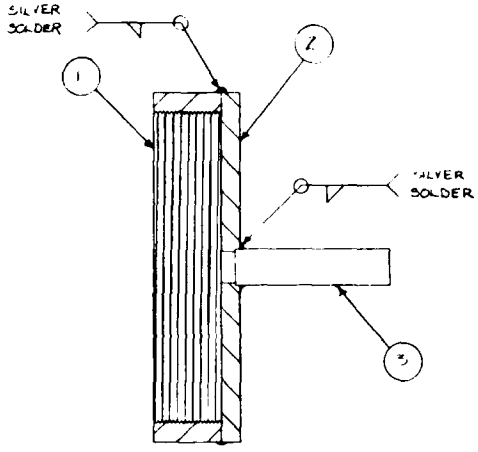

CAP ASSEMBLY (1A)

NOTE
IF WARPING OCCURS, FACE OFF CAP TOP ON UNDERNEATH SIDE SO THAT IT IS FLAT

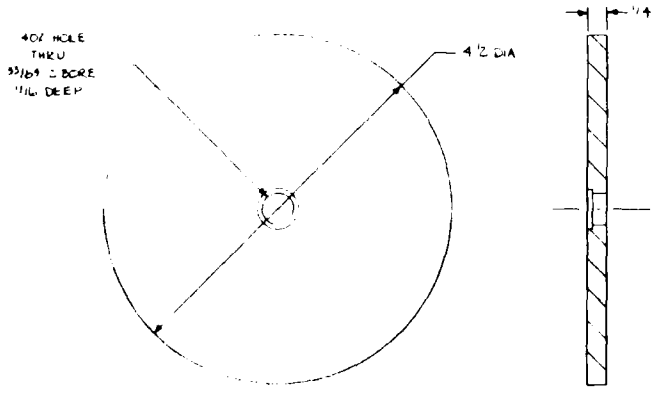

CAP TOP (2)

REV	DESCRIPTION	DATE	BY

REVISIONS

NEXT ASSY	QTY

UNLESS OTHERWISE SPECIFIED DIMENSIONS IN INCHES TOLERANCES ON
FRACTIONS ANGLES
DECIMALS X XX XXX
± .05 ± .010

REQ BY Bill Farthing
ENGR S Berg
DFTMN "
CHK
PROJ 5335
APPD
DATE 03/12/84

Southern Research Institute
BIRMINGHAM, ALABAMA 35255

HIGH CONCENTRATION STANDARD AEROSOL GENERATOR
CAP ASSEMBLY

SIZE C DWG NO 5335-C-13 REV
SCALE FULL SHEET 1 OF 1

FIND NO	PART NO	REQ'D	DESCRIPTION	MATERIAL
1	5335-C-M01	2	7" DIA × 1/2" THICK	6061-6T A1

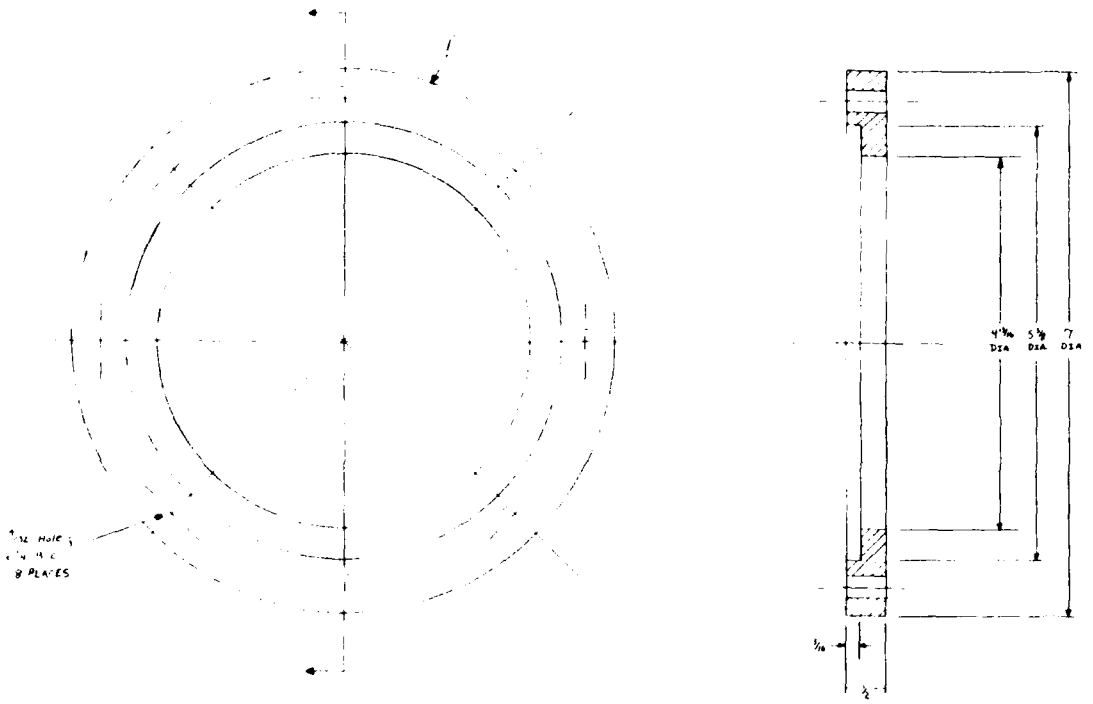

REV	DESCRIPTION	DATE	BY

REVISIONS

NEXT ASSY	QTY

UNLESS OTHERWISE SPECIFIED DIMENSIONS IN INCHES TOLERANCES ON

FRACTIONS ANGLES

DECIMALS

X	XX	XXX
	± .05	± .010

REQ BY Wm Farthing
ENGR R. MARTIN
DFTMN R. Martin
CHK
PROJ 5335
APPD
DATE 3-8-84

Southern Research Institute
BIRMINGHAM, ALABAMA 35255

HIGH CONCENTRATION STANDARD AEROSOL GENERATOR
VERTICAL IMPACTOR FLANGE PLATES

SIZE C DWG NO 5335-C-14 REV

SCALE 1:1 SHEET

FIND NO	PART NO	REQ'D	DESCRIPTION	MATERIAL
1	5335-C-15A	1	7" O.D. x 3/8" THICK	6061-6T Al

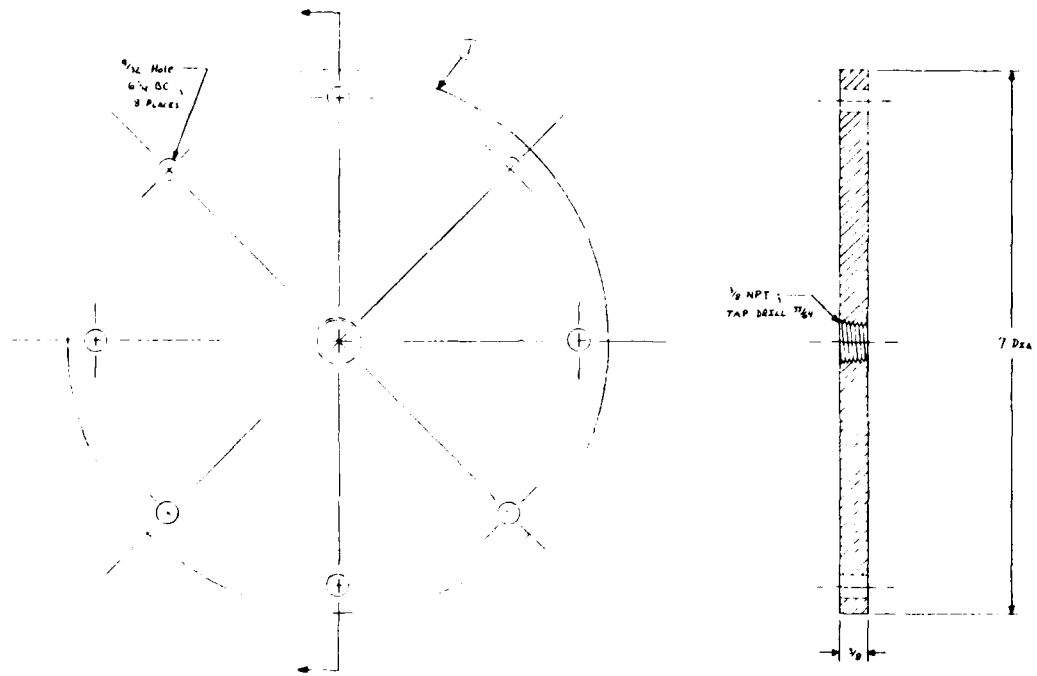

REV	DESCRIPTION	DATE	BY

REVISIONS

UNLESS OTHERWISE SPECIFIED DIMENSIONS IN INCHES TOLERANCES ON

FRACTIONS ANGLES

DECIMALS

.X	.XX	.XXX
	± .05	± .010

REQ BY	Wm Fromling
ENGR	Daniel S. Martin
DFTMN	" "
CHK	
PROJ	5335
APPD	
DATE	3-8-81

Southern Research Institute
BIRMINGHAM, ALABAMA 35255

HIGH CONCENTRATION STANDARD AEROSOL GENERATOR
VERTICAL IMPACTOR EXCESS AIR INLET PLATE

SIZE	DWG NO	REV
C	5335-C-15	

SCALE 1:1 SHEET

NEXT ASSY	QTY

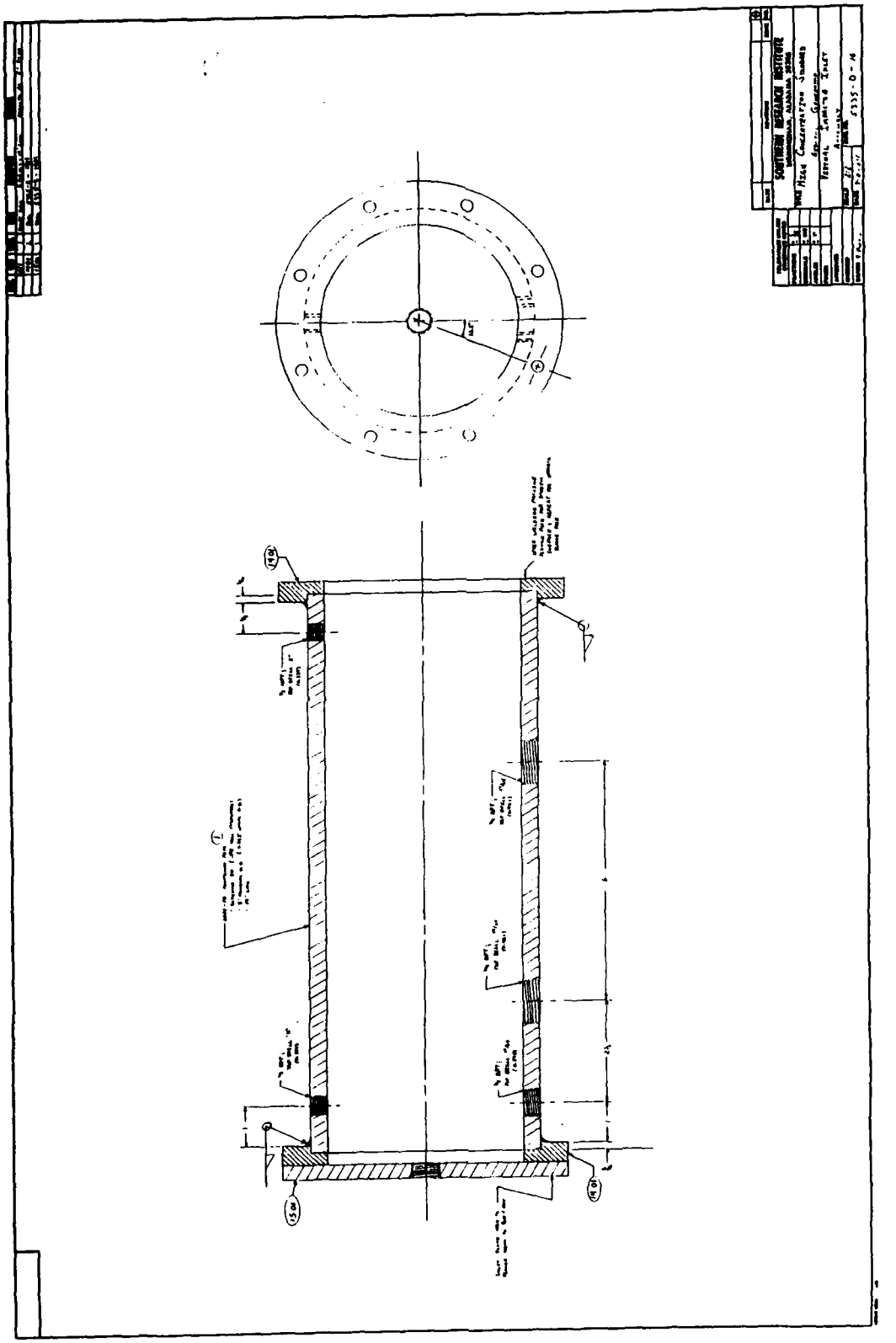

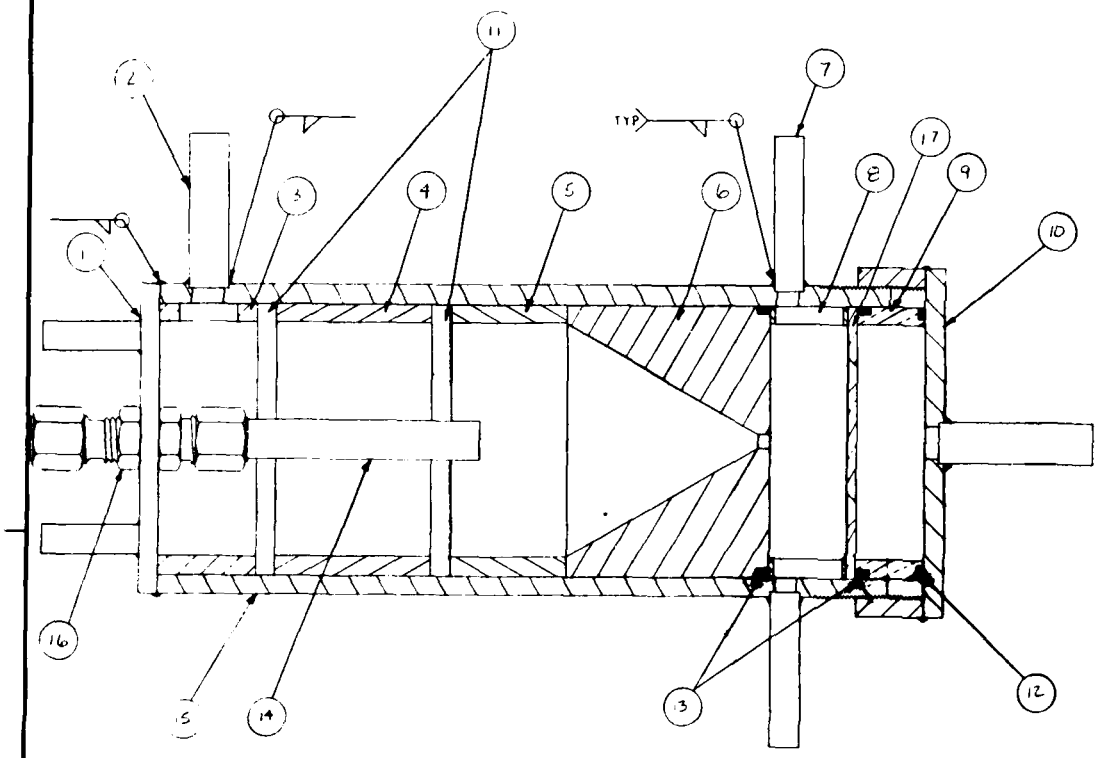

LAST IMPACTOR ASSEMBLY (17A)

FIND NO	PART NO	REQ'D	DESCRIPTION	MATERIAL
1	5335-B-18A	1	BULKHEAD, IMPACTOR	
2	5335-C-1701	1	TUBE, 1/2 O.D. X .049 WALL X 2 L,	ALUMINUM
3	5335-D-1105	1	SLOTTED RETAINER RING	
4	5335-D-1101	1	RETAINER RING	
5	5335-D-1102	1	RETAINER RING	
6	5335-D-110B	1	CLEAN AIR TAPER	
7	6335-D-1702	2	TUBE, 3/8 O.D. X .049 WALL X 2 L,	ALUMINUM
8	5335-D-1106	1	DRAIN RETAINER RING	
9	5335-D-1109	1	O-RING RETAINER	
10	5335-C-13A	1	CAP ASS'Y	
11	5335-C-1901	A/R	SCREEN	
12	5335-C-1703	1	O-RING, 3 1/4 I.D. X 3/32 W, #2-152-CB73-70	
			PARKER	
13	5335-C-1704	2	O-RING, 3 1/4 I.D. X 1/8 W, #2-286-CB73-70	
			PARKER	
14	5335-C-1705	1	TUBE, 12mm O.D. x 1mm WALL, 178mm (7") L,	ALUM.
15	5335-C-1201	1	SHELL, LAST IMPACTOR	
16	5335-C-1706	1	BULKHEAD UNION, 12mm B-12MD-61, B HAM VALVE	
17	5335-D-1110	1	SPIDER	

NOTE:
BORE THRU ITEM 16, BULKHEAD UNION FOR 12mm TUBE

REV	DESCRIPTION	DATE	BY

REVISIONS

UNLESS OTHERWISE SPECIFIED DIMENSIONS IN INCHES TOLERANCES ON
FRACTIONS ANGLES
DECIMALS
X | XX ±.05 | XXX ±.010

REQ BY BILL FARTHING
ENGR S BERG
DFTSMN
CHK
PROJ 5335
APPD
DATE 03/12/84

Southern Research Institute
BIRMINGHAM, ALABAMA 35255

HIGH CONCENTRATION STANDARD AEROSOL GENERATOR
LAST IMPACTOR ASS'Y

SIZE C | DWG NO 5335-C-17 | REV
SCALE FULL | SHEET 1 OF 1

NEXT ASSY | QTY

ASSY.	ITEM	QUAN.	NAME	DESCRIPTION	MATERIAL
A	1801	1	[illegible]	4 DIA X 4 THICK	6061-T6 ALUMINUM
	1802	4	[illegible]	[illegible] WALL [illegible]	ALUMINUM

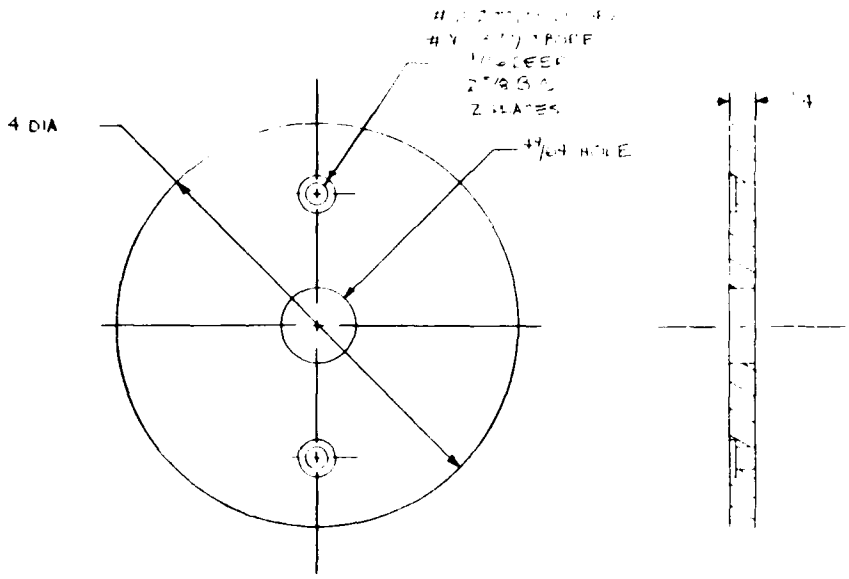

BULKHEAD (1801)

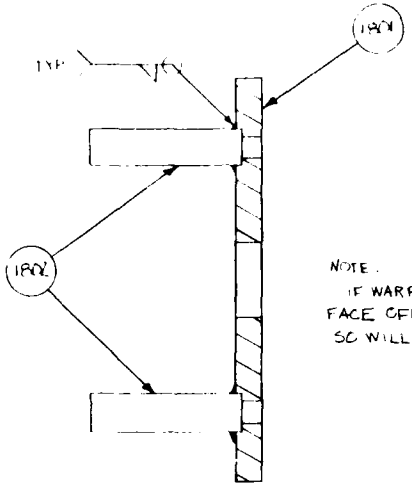

NOTE:
IF WARPING OCCURS, FACE OFF PLATE SO WILL BE FLAT

BULKHEAD ASSEMBLY (18A)

DATE	REVISIONS	ZONE	NO.
3/27/84	ADDED DIMENSIONS FOR TUBE HOLES	1801	4

TOLERANCES UNLESS OTHERWISE NOTED	
FRACTIONS	± 1/32
DECIMALS	± .010
ANGLES	± 1°
FINISH	
APPROVED	
CHECKED	
DRAWN S BERG	

SOUTHERN RESEARCH INSTITUTE
BIRMINGHAM, ALABAMA 35205

TITLE
HIGH CONCENTRATION STANDARD AEROSOL GENERATOR

BULKHEAD, LAST IMPACTOR

SCALE FULL
DATE 3/12/84
DWG. NO. 5335 -B- 18

ASSY.	ITEM	QUAN.	NAME DESCRIPTION MATERIAL
	1901	A/R	SCREEN, 3 1/2 DIA 200 MESH # CX-200 SMALL PARTS, INC. AND/OR NYLON MONOFILIMENT, 12% OPEN AREA # CMN-20 AND/OR NYLON MONOFILIMENT, 5% OPEN AREA # CMN-10

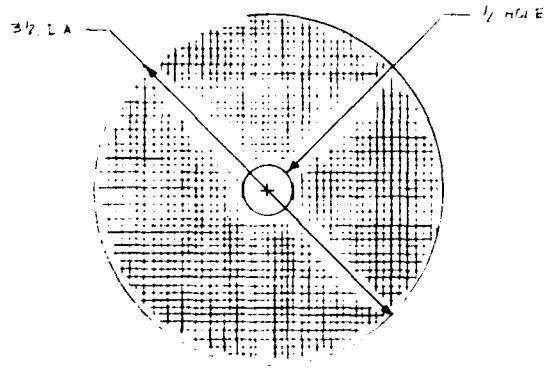

SCREEN (1901)

TOLERANCES UNLESS OTHERWISE NOTED	
FRACTIONS	± 1/32
DECIMALS	± .010
ANGLES	± 1°
FINISH	
APPROVED	
CHECKED	
DRAWN	SBERG

DATE	REVISIONS	ZONE	NO.

SOUTHERN RESEARCH INSTITUTE
BIRMINGHAM, ALABAMA 35205

TITLE
HIGH CONCENTRATION STANDARD AEROSOL GENERATOR

SCREEN

SCALE FULL
DATE 3/12/84
DWG. NO. 5335 -B- 19

INLET CORE MODIFICATION

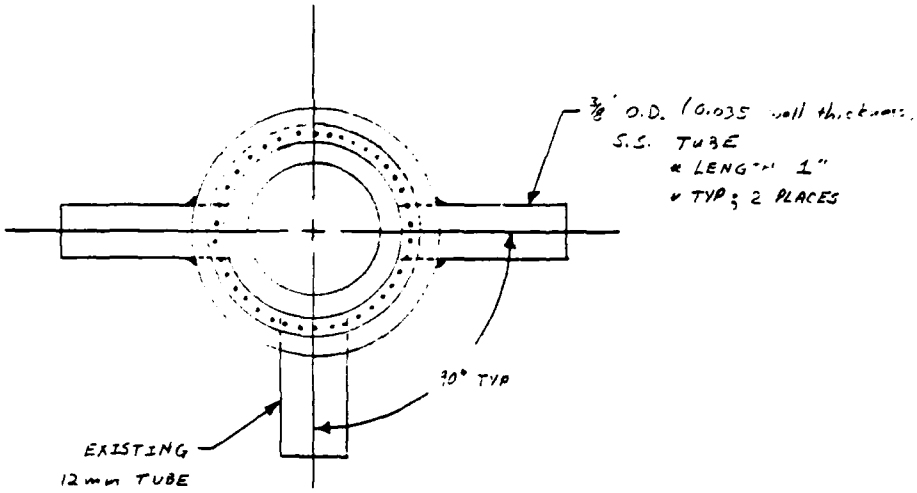

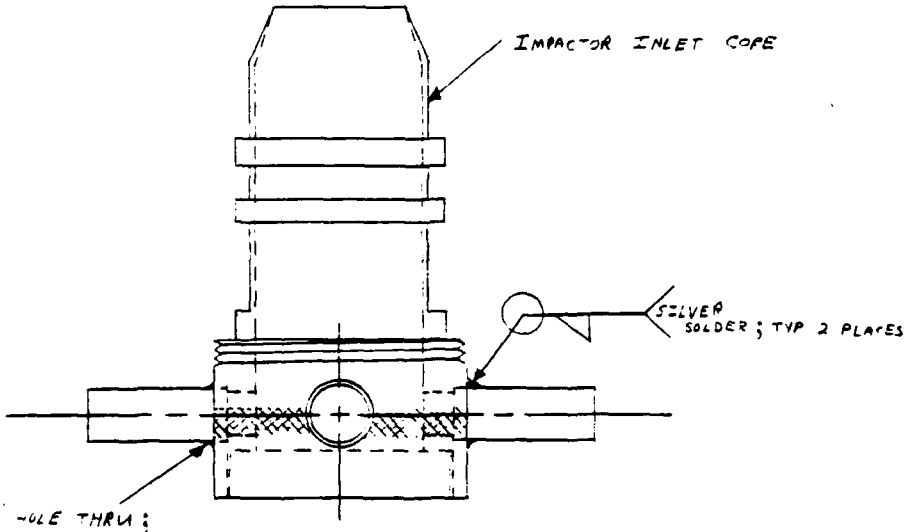

DRILL 5/16" HOLE THRU;
C'BORE 'V' (0.2770) 1/8" DEEP;
TYP -- 2 PLACES (90° APART)

3-28-84
RSM

TUBE STUB MODIFICATIONS

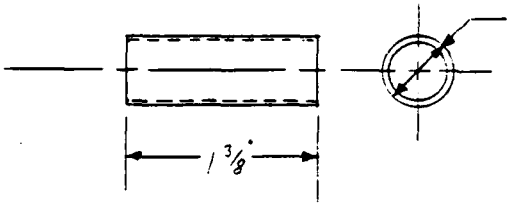

- FABRICATED FROM ½" O.D. x 0.049 wall thickness STAINLESS STEEL TUBING
- 8 PIECES REQUIRED

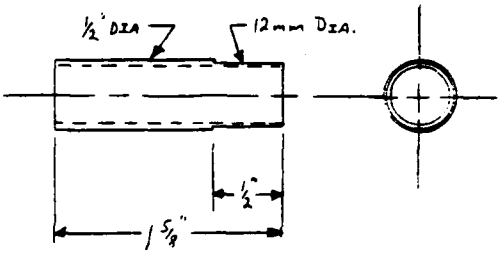

- FABRICATE FROM ½" O.D. (Wall Thickness 0.049") S.S. TUBING
- 1 PIECE REQUIRED

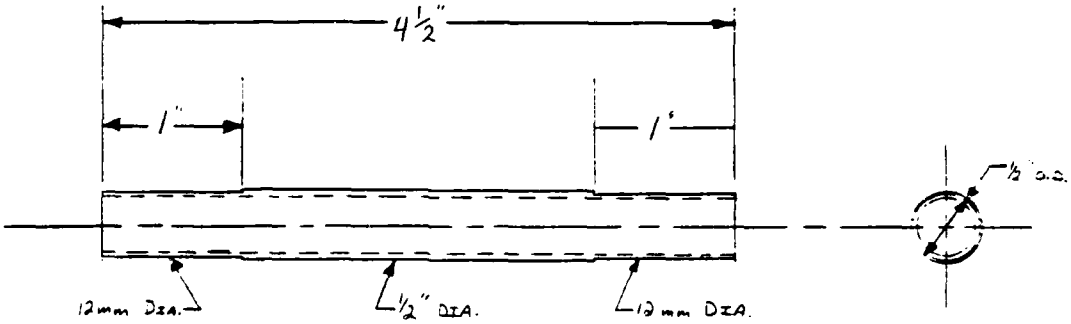

- From ½" O.D. (0.049 wall thickness) S.S. Tubing Fabricate ABOVE EXTENSION TUBE
- 1 PIECE REQUIRED

3-28-84
RSM

Appendix B Maintenance Instructions and Material Properties of Purchased Components

Cole-Parmer Instrument Co.
7425 North Oak Park Avenue
Chicago, Illinois 60648 U.S.A.

a) Tygon® (R-3603) plastic tubing

Soft, clear tubing slips over tubulatures easily. Grips tightly to glass or metal, bends to small-radius curves to speed set-ups. A long-life tubing that won't age or oxidize. Autoclavable at 250°F (121°C), 15 psi for 30 minutes. Transparent. Temp range: −50° to +165°F (−45° to +74°C).

b) Silicone tubing

For greater heat resistance and low compression set, this odorless, translucent tubing is recommended. Excellent biocompatibility. Meets FDA, USDA, USP class VI requirements. Do not use with concentrated solvents, oils, acids, or dilute NaOH. Autoclavable; remains flexible throughout a wide temperature range: −80° to +500°F (−62° to +260°C).

c) Bev-a-line IV tubing

Save up to 50% over TFE tubing. No plasticizers—safe for food, beverage, drug, lab, and medical use. Meets FDA, USDA, National Formulary, and USP standards for high-purity systems. Polyethylene liner with ethyl vinyl acetate outer shell, for all the advantages of polyethylene without stress-cracking. Heat-bondable: needs no connectors. Safe for alcohols. Temp range −60° to +160°F (−51° to +71°C).

d) Gum rubber tubing

Tack-free latex tubing. Seamless for longer life. Ideal for liquids and gases. Amber-colored tubing can be sterilized repeatedly. Temp range: −22° to +302°F (−30° to +150°C).

e) Vinyl tubing

Tough, flexible polyvinyl tubing has excellent clarity. Odorless and nontoxic. Good water, chemical and abrasion resistance. Temp range: −40° to +180°F (−40° to +82°C).

f) C-Flex™ thermoplastic elastomer

High-performance, long-life tubing. This durable tubing formulation exhibits exceptional chemical and temperature resistance; surpasses USP class VI requirements, meets FDA standards. Excellent tensile and tear strength. Smooth surface; low gas permeability and good biocompatibility. Sterilizable by ethylene oxide, gamma radiation, or autoclave. Opaque white. Temp range: −80° to +230°F (−62° to +110°C).

TUBING

g) Polyethylene tubing

White, semi-flexible, translucent. Unaffected by many chemicals. Excellent electrical insulator. Low water-vapor permeability, high O_2 and CO_2 permeability. Bends even at low temperatures. Temp range: −70° to +176°F (−60° to +80°C).

h) Polypropylene tubing

Translucent and more rigid than polyethylene tubing. High chemical, stress, and puncture resistance. Temp range: +32° to +275°F (0° to +135°C). Nalgene.

i) Polyurethane tubing

Clear, flexible, clean; ideal for high-purity work. Excellent chemical resistance. Temp range: −94° to +116°F (−70° to +82°C). Nalgene.

j) Norprene® tubing

Ozone-resistant for longer life in electrical environments. Heat-sealable, nonaging, nonoxidizing—shows no sign of weakening or cracking after years of exposure to heat and ozone. Superior acid and alkali resistance. UL-listed for some applications. Food-grade Norprene tubing is available in quantities of 1000 feet or more; call for details. Opaque black. Temp range: −60° to +275°F (−51° to +135°C).

C-Flex—TM Concept, Inc. Norprene—TM Norton Co.

A GUIDE TO THE STRUCTURE & PROPERTIES OF RESINS*

Biological properties of plastics

Most of the plastics used in our plasticware are biologically inert. Polyethylenes, polypropylene, polymethylpentene, polycarbonate, polystyrene, and Teflon® FEP have been shown to have no effect on tissue cultures. Distilled water for preparing culture media can be controlled and stored safely in polyethylene containers.

Polyolefins

These resins are break-resistant, nontoxic, noncontaminating. They are the only plastics lighter than water. They easily withstand exposure to nearly all chemicals at room temperature for up to 24 hours. Strong oxidizing agents eventually cause embrittlement. All polyolefins can be damaged by long exposure to ultraviolet light.

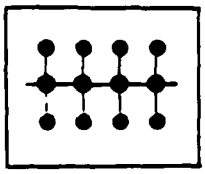

Polyethylene.† The polymerization of ethylene results in an essentially straight-chained, high molecular weight hydrocarbon. Branching (side chain formation) occurs to an extent and can be controlled. Minimum branching results in "high-density" polyethylene (HDPE), also called "linear" polyethylene because of its closely packed molecular chains. More branching gives a less compact solid known as "low-density" or "conventional" polyethylene (LDPE). In general, HDPE has greater chemical resistance than LDPE, and is more rigid. Polyethylene is chemically unreactive: strong oxidizing agents eventually cause some oxidation; some solvents cause softening or swelling, but no solvent is known for polyethylene at room temperature.

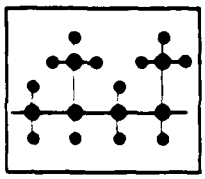

Polypropylene (PP)† is similar to polyethylene, but each unit of the chain has a methyl group attached. It is translucent, autoclavable, and has no known solvent at room temperature. It is slightly more susceptible to strong oxidizing agents than conventional polyethylene because of its many branches (methyl groups).

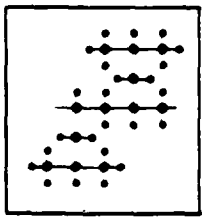

Polymethylpentene (PMP or "TPX")† is similar to polypropylene, but has an isobutyl group attached to each unit of the chain instead of a methyl group. Its chemical resistance is closer to that of PP. It is more easily softened by some hydrocarbons and chlorinated solvents, and strong oxidizing agents will attack it over a period of time. Its excellent transparency, rigidity, and chemical resistance, plus its resistance to impact and to high temperatures, make PMP a superior material for labware. PMP withstands repeated autoclaving, even at 150°C. It can be used intermittently to 175°C.

Polycarbonate (PC)†

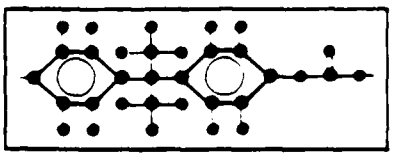

Toughest of all thermoplastics, polycarbonate is window-clear, amazingly strong and rigid, autoclavable, and non-toxic. Polycarbonate is a special type of polyester in which dihydric phenols are joined through carbonate linkages. These linkages are subject to chemical reaction with bases and concentrated acids, hydrolytic attack at elevated temperatures (e.g., during autoclaving), and make PC soluble in various organic solvents. The transparency and unusual strength make PC ideal for high-speed centrifuge ware.

*Reprinted with permission of the Nalge Co.

†Meets the requirements of the Food Additives Amendment of the Federal Food, Drug, and Cosmetic Act.

Polysulfone (PSF)†

Clear, strong, nontoxic and virtually unbreakable. Unlike polycarbonate, polysulfone will not hydrolyze during autoclaving and has a natural straw-colored cast. PSF is resistant to acids, bases, aqueous solutions, aliphatic hydrocarbons and alcohols. PSF is composed of phenylene units linked by three different chemical groups—isopropylidene, ether and sulfone. Each of the three linkages imparts specific properties to the polymer: chemical resistance, temperature resistance and impact strength.

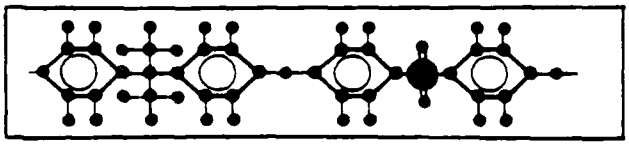

Polystyrene (PS)†

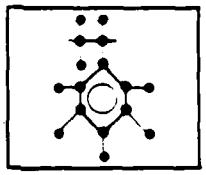

Rigid, with excellent dimensional stability. Polystyrene has good chemical resistance to aqueous solutions. This extremely clear material is commonly used for disposable laboratory products.

Polyvinyl chloride (PVC)

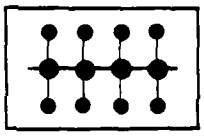

Similar in structure to polyethylene, but each unit contains a chlorine atom. The chlorine atom renders it vulnerable to some solvents, but also makes it more resistant in many applications. PVC has extremely good resistance to oils and very low permeability to most gases. It is also transparent and has a slight bluish tint. Narrow-mouth bottles made of PVC are relatively thin-walled and can be flexed slightly. When blended with phthalate ester plasticizers, PVC becomes soft and pliable, ideal for laboratory tubing.

Fluorocarbons

Remarkable chemical resistance is typical of Teflon® tetrafluoroethylene (TFE) and fluorinated ethylene propylene (FEP).

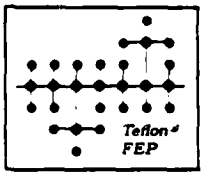

Teflon® TFE† is opaque white. Has the lowest friction coefficient of any solid. It makes superb stopcock and separatory funnel plugs because of its low friction and tight seal.

Teflon® FEP† is flexible, translucent, has a slight bluish cast and a heavy feel because of its higher density. It resists all known chemicals except molten alkali metals, elemental fluorine and fluorine precursors at elevated temperatures. It should not be used with concentrated perchloric acid. FEP withstands temperatures from −270° to +205°C, and may be sterilized repeatedly by all known chemical and thermal methods. It can even be boiled in nitric acid.

Teflon® PFA is a plastic with higher mechanical strength at elevated temperatures than TFE or FEP. Maximum continuous service temperature is +500°F (+260°C).

Tefzel® ETFE is translucent white and slightly flexible. Similar to Teflon TFE and FEP, with greater mechanical strength and impact resistance.

Halar® E-CTFE is an alternating copolymer of ethylene and chlorotrifluorethylene. Withstands continous exposure to extreme temps; maintains excellent mechanical properties across this entire range; excellent chemical resistance; radiation resistant.

Teflon, Tefzel—Reg TM E.I. du Pont de Nemours & Co. Halar—Reg TM Allied Corp.

CHEMICAL RESISTANCE AND PHYSICAL PROPERTIES OF RESINS

Interpreting these charts

The Chemical Resistance Chart on the facing page and the Chemical Resistance Summary Chart below *are general guides only.* Because so many factors can affect the chemical resistance of a given product, you should test under your own conditions. If any doubt exists about specific applications of our products, please contact our Technical Service Department at our toll-free number: 1-800-323-4340.

Effects of chemicals on plastics

Chemicals can affect the strength, flexibility, surface appearance, color, dimensions, or weight of plastics. The two basic modes of interaction which cause these changes are (1) chemical attack on the polymer chain, including oxidation; reaction of functional groups in or on the chain; or depolymerization, with resultant reduction in physical properties; and (2) physical change; absorption of solvents, resulting in softening and swelling, or permeation of solvent through the plastic; dissolving in a solvent; cracking from interaction of a "stress-cracking agent" with molded-in stresses.

The reactive combination of compounds of two or more classes may cause a synergistic or undesirable chemical effect. Other factors affecting chemical resistance include temperature, pressure and internal or external stresses (for example, centrifugation), length of exposure and concentration of the chemical. *As temperature increases, resistance to attack decreases.*

Caution!

Do not store strong oxidizing agents in plastic labware except that made of Teflon® FEP. Prolonged exposure causes embrittlement and failure. While prolonged storage may not be intended at time of filling, a forgotten container will fail in time and result in leakage of contents. Do not place plastic labware in a direct flame or on a hot plate.

Chemical resistance summary

Classes of substances 68°F (20°C)	LDPE	HDPE	PP/PA	PMP	FEP/ETFE/TFE	PC	PSF	PVC bottles	PS
Acids, dilute or weak	E	E	E	E	E	E	E	E	E
Acids[1], strong and concentrated	E	E	E	E	E	N	G	E	F
Alcohols	E	E	E	E	E	G	G	E	E
Aldehydes	G	G	G	G	E	F	F	N	N
Bases	E	E	E	E	E	N	E	E	E
Esters	G	G	G	G	E	N	N	N	N
Hydrocarbons, aliphatic	F	G	G	F	E	F	G	E	N
Hydrocarbons, aromatic	F	G	F	F	E	N	N	N	N
Hydrocarbons, halogenated	N	F	F	N	E	N	N	N	N
Ketones	G	G	G	G	E	N	N	N	N
Oxidizing agents, strong	F	F	F	F	E	N	G	G	N

[1]For oxidizing acids, see "Oxidizing agents, strong."

Resin codes

LDPE: Low-density (conventional) polyethylene
HDPE: High-density (linear) polyethylene
PP: Polypropylene
PA: Polyallomer
PMP: Polymethylpentene ("TPX")
FEP: Teflon® FEP (fluorinated ethylene propylene)
TFE: Teflon TFE (tetrafluoroethylene)
ETFE: Tefzel® ETFE (ethylene-tetrafluoroethylene)
PC: Polycarbonate
PVC: Polyvinyl chloride
PSF: Polysulfone
PS: Polystyrene

Chemical resistance classification

E—30 days of constant exposure with no damage. Plastic may even tolerate chemical for years.

G—Little or no damage after 30 days of constant exposure to the reagent.

F—Some effect after 7 days of constant exposure to the reagent. Solvents may cause softening, swelling and permeation losses with LDPE, HDPE, PP, PA and PMP. Effects of solvents on these five resins are normally reversible.

N—Not recommended for continuous use. Immediate damage may occur, severe crazing, cracking, permeation losses.

Physical properties

	Max use temp °F/°C	Transparency	Sterilization[1]				Specific gravity	Flexibility	Brittleness temp °F/°C	Permeability (approx) Units: $\left\{\frac{cc—mm}{sec—cm^2—cm\ Hg}\right\} \times 10^{-10}$			Water absorption (%)
			Autoclavable	Gas	Dry heat	Chemical				N_2	O_2	CO_2	
LDPE	176/80	Transluc	No	Yes	No	Yes	0.92	Excel	−148/−100	20	60	280	<0.01
HDPE	248/120	Transluc	No	Yes	No	Yes	0.95	Rigid	−148/−100	3	10	45	<0.01
PP	275/135	Transluc	Yes	Yes	No	Yes	0.90	Rigid	+32/0	4	25	90	<0.02
PMP	347/175	Clear	Yes	Yes	Yes	Yes	0.83	Rigid	+68/+20	65	270	—	<0.01
FEP	401/205	Transluc	Yes	Yes	Yes	Yes	2.15	Excel	−454/−270	20	60	135	<0.01
ETFE	302/150	Transluc	Yes	Yes	Yes	Yes	1.70	Mod	−148/−100	—	—	—	0.1
PC	275/135	Clear	Yes[2]	Yes	No	Yes	1.20	Rigid	−211/−135	3	20	85	0.35
PVC	158/70	Clear	No	Yes	No	Yes	1.34	Rigid	−22/−30	0.5-2	1-6	10-35	0.06
PA	266/130	Transluc	Yes	Yes	No	Yes	0.90	Mod	−40/−40	6	30	100	<0.02
PSF	329/165	Clear	Yes	Yes	Yes	Yes	1.24	Rigid	−148/−100	3	15	60	0.30

[1]Recommendations for sterilization: see page 5.
[2]Sterilizing reduces mechanical strength. Do not use PC vessels for vacuum applications if they have been autoclaved.

Phone us for a FREE poster of these compatibility charts.

CHEMICAL RESISTANCE OF PLASTIC RESINS

See page 4 for keys to resin codes and chemical resistance classification. A colorful wall poster, incorporating the information in this chart, is yours free, compliments of Nalge Company and Cole-Parmer. Just phone us.

First letter = resistance at 20°C; second letter = resistance at 50°C. Intended as a guide; test before using.

Chemical	Resin							
	LDPE	HDPE	PP/PA	PMP	FEP/ETFE	PC	PVC	PSF
Acetaldehyde	GN	GF	GN	GN	EE	FN	GN	NN
Acetamide, Sat.	EE	EE	EE	EE	EE	NN	NN	NN
Acetic Acid, 5%	EE	EE	EE	EE	EE	EG	EE	EE
Acetic Acid, 50%	EE	EE	EE	EE	EE	EG	EG	GG
Acetone	FN	EE	EE	EE	EE	NN	NN	NN
Adipic Acid	EG	EE	EE	EE	EE	EE	EG	GG
Alanine	EE	EE	EE	EE	EE	NN	NN	NN
Allyl Alcohol	EE	EE	EE	EG	EE	GF	GF	GF
Aluminum Hydroxide	EG	EE	EG	EG	EE	FN	EG	GG
Aluminum Salts	EE	EE	EE	EE	EE	EG	EE	EE
Amino Acids	EE	EE	EE	EE	EE	EE	EE	EE
Ammonia	EE	EE	EE	EE	EE	NN	EG	GF
Ammonium Acetate, Sat.	EE	EE	EE	EE	EE	EE	EE	EE
Ammonium Glycolate	EG	EE	EG	EG	EE	GF	EE	GG
Ammonium Hydroxide, 5%	EE	EE	EE	EE	EE	FN	EE	GG
Ammonium Hydroxide, 30%	EG	EE	EG	EG	EE	NN	EG	GG
Ammonium Oxalate	EG	EE	EG	EG	EE	EE	EE	EE
Ammonium Salts	EE	EE	EE	EE	EE	EG	EG	EE
n-Amyl Acetate	GF	EG	GF	GF	EE	NN	NN	NN
Amyl Chloride	NN	FN	NN	NN	EE	NN	NN	NN
Aniline	EG	EG	GF	GF	EE	FN	NN	NN
Benzaldehyde	EG	EE	EG	EG	EE	FN	NN	FF
Benzene	FN	GG	GF	GF	EE	NN	NN	NN
Benzoic Acid, Sat.	EE	EE	EG	EG	EE	EG	EG	FF
Benzyl Acetate	EG	EE	EG	EG	EE	FN	NN	NN
Benzyl Alcohol	NN	FN	NN	NN	EE	GF	GF	NN
Bromine	NN	FN	NN	NN	EE	FN	GN	NN
Bromobenzene	NN	FN	NN	NN	EE	NN	NN	NN
Bromoform	NN	NN	NN	NN	EE	NN	NN	NN
Butadiene	NN	FN	NN	NN	EE	NN	FN	NN
n-Butyl Acetate	GF	EG	GF	GF	EE	NN	NN	NN
n-Butyl Alcohol	EE	EE	EE	EG	EE	GF	GF	GF
sec-Butyl Alcohol	EG	EE	EG	EG	EE	GF	GG	GF
tert-Butyl Alcohol	EG	EE	EG	EG	EE	GF	EG	GF
Butyric Acid	NN	FN	NN	NN	EE	FN	GN	GG
Calcium Hydroxide, Conc.	EE	EE	EE	EE	EE	NN	EE	GG
Calcium Hypochlorite, Sat.	EE	EE	EE	EG	EE	FN	GF	EE
Carbazole	EE	EE	EE	EE	EE	NN	NN	NN
Carbon Disulfide	NN	NN	NN	NN	EE	NN	NN	NN
Carbon Tetrachloride	FN	GF	GF	NN	EE	NN	GF	NN
Cedarwood Oil	NN	FN	NN	NN	EE	GF	FN	FF
Cellosolve Acetate	EG	EE	EG	EG	EE	FN	FN	NN
Chlorine, 10% in Air	GN	EF	GN	GN	EE	EG	EE	NN
Chlorine, 10% (Moist)	GN	GF	GN	GN	EE	GF	EG	NN
Chloroacetic Acid	EE	EE	EG	EG	EE	FN	FN	NN
p-Chloroacetophenone	EE	EE	EE	EE	EE	NN	NN	NN
Chloroform	FN	GF	GF	FN	EE	NN	NN	NN
Chromic Acid, 10%	EE	EE	EE	EE	EE	GF	EG	NN
Chromic Acid, 50%	EE	EE	GF	GF	EE	FN	EF	NN
Cinnamon Oil	NN	FN	NN	NN	EE	GF	NN	FF
Citric Acid, 10%	EE	EE	EE	EE	EE	EG	GG	EE
Cresol	NN	FN	GF	NN	EE	NN	NN	NN
Cyclohexane	FN	FN	FN	NN	EE	EG	GF	NN
Decalin	GF	EG	GF	FN	EE	NN	EG	NN
o-Dichlorobenzene	FN	FF	FN	FN	EE	NN	NN	NN
p-Dichlorobenzene	FN	GF	GF	GF	EE	NN	NN	NN
Diethyl Benzene	NN	FN	NN	NN	EE	FN	NN	NN
Diethyl Ether	NN	FN	NN	NN	EE	NN	FN	NN
Diethyl Ketone	GF	GG	GG	GF	EE	NN	NN	NN
Diethyl Malonate	EE	EE	EE	EG	EE	FN	GN	FF
Diethylene Glycol	EE	EE	EE	EE	EE	GF	FN	GG
Diethylene Glycol Ethyl Ether	EE	EE	EE	EE	EE	FN	FN	FF
Dimethyl Formamide	EE	EE	EE	EE	EE	NN	FN	NN
Dimethylsulfoxide	EE	EE	EE	EE	EE	NN	NN	NN
1,4-Dioxane	GF	GG	GF	GF	EE	GF	FN	GF
Dipropylene Glycol Ether	EE	EE	EE	EE	EE	GF	GF	GG
Ethyl Acetate	NN	FN	NN	NN	EE	NN	FN	NN
Ethyl Alcohol	EE	EE	EE	EG	EE	NN	NN	NN
Ethyl Alcohol, 40%	EG	EE	EG	EG	EE	EG	EG	GG
Ethyl Benzene	FN	GF	FN	FN	EE	NN	NN	NN
Ethyl Benzoate	FF	GG	GF	GF	EE	NN	NN	NN
Ethyl Butyrate	GN	GF	GN	FN	EE	NN	NN	NN
Ethyl Chloride, Liquid	FN	FF	FN	FN	EE	NN	NN	NN
Ethyl Cyanoacetate	EE	EE	EE	EE	EE	FN	FN	FF
Ethyl Lactate	EE	EE	EE	EE	EE	FN	FN	FF
Ethylene Chloride	GN	GF	FN	NN	EE	NN	NN	NN
Ethylene Glycol	EE	EE	EE	EE	EE	GF	EE	EE
Ethylene Glycol Methyl Ether	EE	EE	EE	EE	EE	FN	FN	FF
Ethylene Oxide	FF	GF	FF	FN	EE	FN	FN	EE
Fluorides	EE	EE	EE	EE	EE	EE	EE	EE
Fluorine	FN	GN	FN	FN	EG	GF	EG	NN
Formaldehyde, 10%	EE	EE	EE	EG	EE	EG	GF	GF
Formaldehyde, 40%	EG	EE	EG	EG	EE	EG	GF	GF

Chemical	Resin							
	LDPE	HDPE	PP/PA	PMP	FEP/ETFE	PC	PVC	PSF
Formic Acid, 3%	EG	EE	EG	EG	EE	EG	GF	GG
Formic Acid, 50%	EG	EE	EG	EG	EE	EG	GF	GG
Formic Acid, 98–100%	EG	EE	EG	EF	EE	EF	FN	FF
Fuel Oil	FN	GF	EG	GF	EE	EG	EE	EG
Gasoline	FN	GG	GF	GF	EE	FF	GN	FF
Glacial Acetic Acid	EG	EE	EG	EG	EE	NN	EG	FN
Glycerine	EE	EE	EE	EE	EE	EE	EE	EE
n-Heptane	FN	GF	FF	FF	EE	EG	GF	EG
Hexane	NN	GF	GF	FN	EE	FN	GN	EG
Hydrochloric Acid, 1–5%	EE	EE	EE	EG	EE	EE	EE	EE
Hydrochloric Acid, 20%	EE	EE	EE	EG	EE	GF	EG	EE
Hydrochloric Acid, 35%	EE	EE	EG	EG	EE	NN	GF	EE
Hydrofluoric Acid, 4%	EG	EE	EG	EG	EE	GF	GF	GF
Hydrofluoric Acid, 48%	EE	EE	EE	EE	EE	NN	GF	FN
Hydrogen Peroxide, 3%	EE	EE	EE	EE	EE	EE	EE	EE
Hydrogen Peroxide, 30%	EG	EE	EG	EG	EE	EE	EE	EE
Hydrogen Peroxide, 90%	EG	EE	EG	EG	EE	EE	EG	EE
Isobutyl Alcohol	EE	EE	EE	EG	EE	EG	EG	EG
Isopropyl Acetate	GF	EG	GF	GF	EE	NN	NN	NN
Isopropyl Alcohol	EE	EE	EE	EE	EE	EE	EG	EE
Isopropyl Benzene	FN	GF	FN	NN	EE	NN	NN	NN
Kerosene	FN	GG	GF	GF	EE	GF	EE	GF
Lactic Acid, 3%	EG	EE	EG	EG	EE	EG	GF	EE
Lactic Acid, 85%	EE	EE	EG	EG	EE	EG	GF	EE
Methoxyethyl Oleate	EG	EE	EG	EG	EE	FN	NN	NN
Methyl Alcohol	EE	EE	EE	EE	EE	GF	EF	GF
Methyl Ethyl Ketone	EG	EE	EG	EF	EE	NN	NN	NN
Methyl Isobutyl Ketone	GF	EG	GF	FF	EE	NN	NN	NN
Methyl Propyl Ketone	GF	EG	GF	FF	EE	NN	NN	NN
Methylene Chloride	FN	GF	FN	FN	EE	NN	NN	NN
Mineral Oil	GN	EE	EE	EG	EE	EG	EG	EE
Nitric Acid, 1–10%	EE	EE	EE	EE	EE	EG	EG	EF
Nitric Acid, 50%	GG	GN	FN	GN	EE	GF	GF	GF
Nitric Acid, 70%	FN	GN	FN	GF	EE	NN	FN	NN
Nitrobenzene	NN	FN	NN	NN	EE	NN	NN	NN
n-Octane	EE	EE	EE	EE	EE	GF	FN	GF
Orange Oil	FN	GF	GF	FF	EE	FF	FN	FF
Ozone	EG	EE	EG	EE	EE	EG	EG	EE
Perchloric Acid	GN	GN	GN	GN	GF	NN	GN	NN
Perchloroethylene	NN	NN	NN	NN	EE	NN	NN	NN
Phenol, Crystals	GN	GF	GN	FG	EE	EN	FN	—
Phosphoric Acid, 1–5%	EE	EE	EE	EE	EE	EE	EE	EE
Phosphoric Acid, 85%	EE	EE	EG	EG	EE	EG	EG	EE
Pine Oil	GN	EG	EG	GF	EE	GF	FN	FF
Potassium Hydroxide, 1%	EE	EE	EE	EE	EE	FN	EE	EE
Potassium Hydroxide, Conc.	EE	EE	EE	EE	EE	NN	EG	EE
Propane Gas	NN	FN	NN	NN	EE	FN	EG	FF
Propylene Glycol	EE	EE	EE	EE	EE	GF	FN	GG
Propylene Oxide	EG	EE	EG	EG	EE	GF	FN	FF
Resorcinol, Sat.	EE	EE	EE	EE	EE	GF	FN	NN
Resorcinol, 5%	EE	EE	EE	EE	EE	GF	GN	NN
Salicylaldehyde	EG	EE	EG	EG	EE	GF	FN	FF
Salicylic Acid, Powder	EE	EE	EE	EG	EE	EG	GF	EE
Salicylic Acid, Sat.	EE	EE	EE	EE	EE	EG	GF	EE
Salt Solutions, Metallic	EE	EE	EE	EE	EE	EE	EE	EE
Silver Acetate	EE	EE	EE	EE	EE	EG	GG	EE
Silver Nitrate	EG	EE	EG	EE	EE	EE	EG	EE
Sodium Acetate, Sat.	EE	EE	EE	EE	EE	EG	GF	EE
Sodium Hydroxide, 1%	EE	EE	EE	EE	EE	FN	EE	EE
Sodium Hydroxide, 50% to Sat.	EE	EE	EE	EE	EE	NN	EG	EE
Sodium Hypochlorite, 15%	EE	EE	EE	EE	EE	GF	EE	EE
Stearic Acid, Crystals	EE	EE	EE	EE	EE	EG	EG	GG
Sulfuric Acid, 1–6%	EE	EE	EE	EE	EE	EE	EG	EE
Sulfuric Acid, 20%	EE	EE	EG	EG	EE	EG	EG	EE
Sulfuric Acid, 60%	EG	EE	EG	EG	EE	GF	EG	EE
Sulfuric Acid, 98%	GG	GG	GG	GG	EE	NN	NN	NN
Sulfur Dioxide, Liq., 46 psi	NN	FN	NN	NN	EE	GN	FN	GG
Sulfur Dioxide, Wet or Dry	EE	EE	EE	EE	EE	EG	EG	GG
Sulfur Salts	FN	GF	FN	FN	EE	FN	NN	GG
Tartaric Acid	EE	EE	EE	EE	EE	EG	EG	EE
Tetrahydrofuran	FN	GF	GF	FF	EE	NN	NN	NN
Thionyl Chloride	NN	NN	NN	NN	EE	NN	NN	NN
Toluene	FN	GG	GF	FF	EE	FN	NN	NN
Tributyl Citrate	GF	EG	GF	GF	EE	NN	FN	FF
Trichloroethane	NN	FN	NN	NN	EE	NN	NN	NN
Trichloroethylene	NN	FN	NN	NN	EE	NN	NN	NN
Triethylene Glycol	EE	EE	EE	EE	EE	EG	GF	EE
Tripropylene Glycol	EE	EE	EE	EE	EE	EG	GF	EE
Turpentine	FN	GG	GF	FF	EE	FN	GF	NN
Undecyl Alcohol	EF	EG	EG	EG	EE	GF	EF	FF
Urea	EE	EE	EE	EG	EE	NN	GN	FF
Vinylidene Chloride	NN	FN	NN	NN	EE	NN	NN	NN
Xylene	GN	GF	FN	FN	EE	NN	NN	NN
Zinc Stearate	EE	EE	EE	EE	EE	EE	EE	EE

Reprinted with permission of Nalge Company.

THE USE & CARE OF PLASTICWARE*

General cleaning

For most general applications, plastics may be washed in a mild detergent, followed by a rinse with tap water and then distilled water. Most plastics, particularly LDPE, HDPE, PP, PMP and PA, have non-wetting surfaces which resist attack and are easy to clean. **Do not use abrasive cleaners or scouring pads on any plastic labware. Do not use strong alkaline cleaning agents with polycarbonate.**

Dishwashers. Labware washing machines can be used with all resins except low-density polyethylene, acrylic and polystyrene due to temperature limitations. The exceptional strength of polycarbonate will be weakened by repeated washings in dishwashers. Polycarbonate labware exposed to high stresses (centrifugation or vacuum), should always be washed by hand using mild, non-alkaline detergents. To avoid excessive abrasion of plastics in dishwashers, metal spindles should be covered with soft material such as plastic tubing. The labware should be weighted down and held in place with accessory racks.

Ultrasonic cleaners may be used so long as the labware does not rest directly on the bottom of the tank; use a cleaning basket.

Special problems

Grease and oils. For many applications, washing with a mild detergent will remove grease and oils.

Organic solvents (such as acetone, alcohols or methylene chloride) may be used with caution when more rigorous cleaning is needed. Extended exposure to these solvents may cause some swelling of polyolefins. Be sure to rinse off all solvents before using labware. Use only alcohols on polycarbonate, polysulfone, polystyrene or PVC; other organic solvents will attack these plastics. Do not use any organic solvent with acrylic.

Boiling labware in dilute sodium bicarbonate ($NaHCO_3$) is also an effective method for removing grease and oil. Do not use with polycarbonate, low-density polyethylene, acrylic or polystyrene.

Organic matter. Chromic acid solution will remove organic matter, but since this solution is a strong oxidizing agent, it will eventually embrittle plastics. To minimize embrittlement, soak plastic for no more than 4 hours. The following formula is an effective cleaning agent: dissolve 120 grams of sodium dichromate ($Na_2Cr_2O_7 \cdot 2H_2O$) in 1000ml tap water. Carefully add 1600ml concentrated sulfuric acid to this solution. **Note:** because this solution generates considerable heat, we recommend external cooling. Do not mix in a plastic container.

This solution is designed to produce an excess of dichromate in the form of a precipitate which actually extends the useful life of chromic acid and dissolves as needed. This chromic acid solution can be used repeatedly until it begins to develop a greenish color, indicating a loss of potency. Because of the excess dichromate built into this formula, this solution lasts considerably longer than commercially available solutions. Sodium hypochlorite solutions (bleaches) are also effective in removing organic matter. Use at room temperature for this application.

Sterilizing plastics

Autoclaving. All items should be carefully cleaned before autoclaving. This will prevent baking contaminants onto the surface of the plastic. After cleaning, all items should be rinsed thoroughly in distilled water before autoclaving. Certain chemicals which have no appreciable effects on plastics at room temperature may cause deterioration at autoclaving temperatures and therefore must be removed.

Because of differences in heat transfer characteristics between plastics and inorganic materials, the contents of plastic containers may take longer to reach sterilization temperatures (typically 121°C). Therefore, longer autoclaving cycles may be necessary for liquids in large-volume plastic containers. Adequate cycles can be determined only by experience with specific liquids and containers.

Polypropylene, polymethylpentene, polyallomer, polysulfone, Tefzel® ETFE, and Teflon® FEP may be autoclaved repeatedly at 121°C, at 15 psi. Cycles should be at least 15 minutes at 121°C to assure sterility.

Polycarbonate is autoclavable. However, cycles should be limited to 20 minutes at 121°C. Polycarbonate shows some loss of mechanical strength after repeated autoclaving and therefore may not function well under high-stress applications (such as centrifugation or vacuum). Avoid using strong alkaline detergents on polycarbonate. All polycarbonate items should be rinsed thoroughly with distilled water before autoclaving.

Polysulfone is autoclavable. Somewhat weakened by autoclaving, although less than polycarbonate. If autoclaved repeatedly, it will eventually fail under high-stress applications, such as high-speed centrifugation.

Polystyrene, polyvinyl chloride, styrene acrylonitrile, acrylic, low-density polyethylene, and high-density polyethylene are not autoclavable under any conditions. These plastics will melt when autoclaved.

Always loosen or remove closures before autoclaving. If this is not done, pressure differentials will cause containers to collapse during autoclaving.

Gas sterilization. All of the resins mentioned here may be gas sterilized (ethylene oxide, formaldehyde). We recommend allowing an appropriate aeration time suited to the particular application before using the item. Gas sterilization can cause pressure differentials at elevated temperatures, so closure threads should be totally disengaged.

Chemical sterilization. In general, all of the plastics mentioned can be subjected to commonly used disinfectants (quaternary ammonium compounds, iodophors, formalin, benzalkonium chloride, etc.). There may be some surface attack (crazing) when using a more chemically aggressive disinfectant on the less-resistant plastics (styrene, styrene acrylonitrile, PVC, polycarbonate, acrylic) with prolonged use. Iodophor stains can be reduced with sodium thiosulfate.

Dry heat. Only Teflon FEP, polymethylpentene and polysulfone may be hot-air sterilized (160°C). All other plastics above may show signs of accelerated oxidative degradation. If polysulfone or polymethylpentene containers are hot-air sterilized, be sure to remove polypropylene closures.

Hazardous matter

Before labware contaminated with infectious or toxic materials is removed from the work area, it should be sterilized appropriately. Autoclaving is the preferred method for sterilization; however, any method of chemical or heat sterilization compatible with the plastic may be used. Liquid waste containing biohazardous materials must always be decontaminated before disposal.

Labware that is contaminated with both biohazardous and radioactive material must first be sterilized. Methods for removing radioactive material depend on the isotope used, its quantity, half-life, material and solubility. For routine decontamination of plastic labware, first soak in decontaminant/cleaner for 24 hours at room temperature. Follow with several rinsings in distilled water. To accelerate decontamination, increase the cleaner concentration and solution temperature. Agitation and scrubbing will also speed this process. **Note: do not scrub polycarbonate.** Always dispose of radioactive wastes and effluents properly.

For additional information on handling contaminated labware, contact your Biosafety/Radiation Safety office, or refer to NIH publications **Biohazardous Safety Guide, Laboratory Safety Monograph,** and **Radiation Safety Guide.**

Trace metals

For most trace metal analyses, plastic is generally "cleaner" or less contaminated than glass or other materials. However, plastic does contain trace levels of certain metals. To minimize potential low-level contamination, these metals can be removed or leached from plastic by soaking in 1N HCl and rinsing in distilled water. For more precise work, use HCl, followed by soaking in 1N HNO_3, and rinsing in distilled water. Soaking time may vary according to individual needs, but plastic should be soaked no longer than 8 hours. **Caution:** concentrated nitric acid is a strong oxidizing agent and will embrittle many plastics.

*Reprinted with permission of the Nalge Company

Teflon, Tefzel—Reg. TM E.I. du Pont de Nemours & Company

Dwyer Instruments, Inc.
Highway 212 at 12
P.O. Box 373, Michigan City, IN 46360 U.S.A.
Telephone 219/872-9141

Anaheim, CA 714/630-6424
Houston, TX 713/446-1146
Marietta, GA 404/427-9406
Hightstown, NJ 609/448-9200

Dwyer® CONTROLS GAGES

"The low pressure people"

BULLETIN NO. **A-27**

OPERATING INSTRUCTIONS and PARTS LIST

Magnehelic® Differential Pressure Gage

SPECIFICATIONS

Dimensions 4-3/4" dia X 2 3/16" deep

Weight 1 lb 2 oz

Finish Baked dark gray enamel

Connections. 1/8 N P.T high and low pressure taps, duplicated, one pair side and one pair back

Accuracy: Plus or minus 2% of full scale, at 70°F (Model 2000-0, 3%, 2000-00, 4%)

Pressure Rating: 15 PSI

Ambient Temperature Range. 20° to 140°F.

Standard gage accessories include two 1/8" N P.T plugs for duplicate pressure taps, two 1/8" pipe thread to rubber tubing adapters, back mounting stud with two washers and jam nut and three flush mounting adapters with screws

Caution: For use with air or compatible gases only

For repeated over-ranging or high cycle rates, contact factory

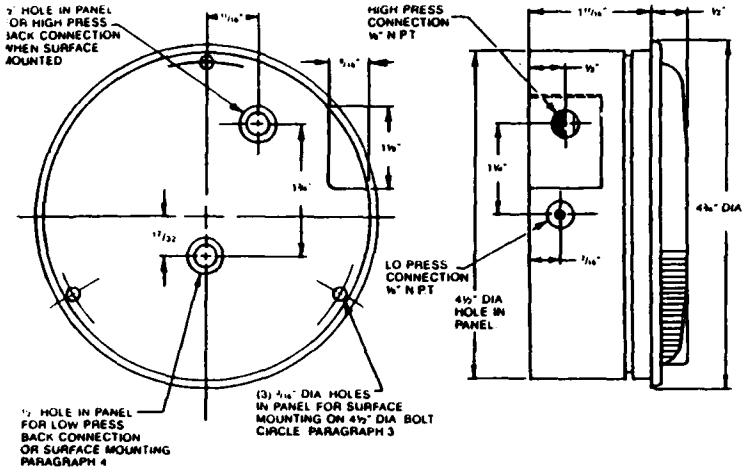

Magnehelic® Gage EXPLODED VIEW Series 2000

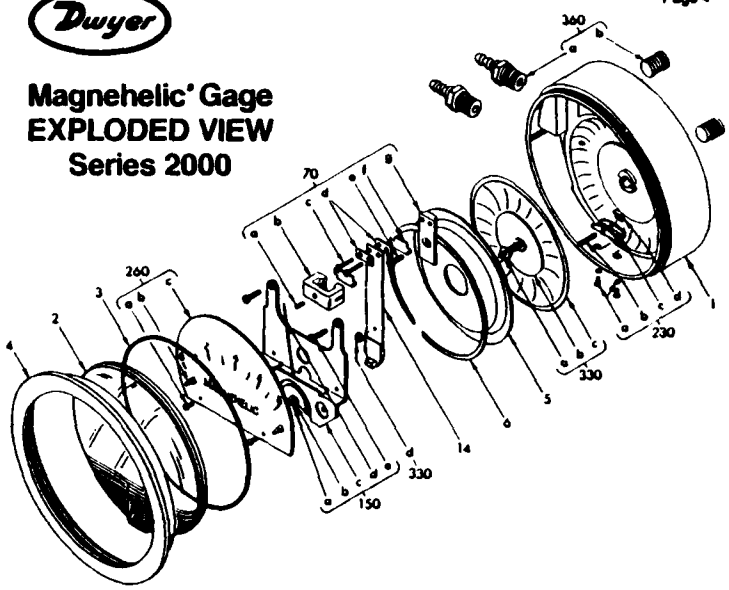

1. Case
2. Cover with zero adjust assy
3. "O" ring seal
4. Bezel
5. *Diaphragm sealing plate*
6. Retaining ring
70. Range Spring assembly
   - a. Clamp set screw
   - b. Clamp
   - c. Mounting screws (2 req'd)
   - d. Clamping shoe (2 req'd)
   - e. Clamp plate screw
   - f. Spacer (2 req'd)
   - g. Clamp plate

*14 Range Spring with magnet

150. Wishbone Assembly – consists of:
   - a. Front jewel
   - b. Locking nut
   - c. Wishbone
   - d. Pointer
   - e. Mounting screws (2 req'd)
   - f. Helix assembly (not shown)
   - g. Pivots (2 req'd) (not shown)
   - h. Rear jewel (not shown)

230. Zero adjust assembly – consists of:
   - a. Foot screws with washers (2 req'd)
   - b. Adjust screw
   - c. Foot
   - d. Finger

*260. Scale Assembly – consists of:
   - a. Mounting screws (2 req'd)
   - b. Bumper pointer stop (2 req'd)
   - c. Scale

*330. Diaphragm Assembly – consists of: (Arbor press needed to install)
   - a. Linkage assy., complete
   - b. Front plate
   - c. Diaphragm
   - d. Rear plate (not shown)
   - e. Plate washer (not shown)

360. Mounting Hardware Kit
   - a. Adapter – pipe plug 1/8" NPT to rubber tubing – (2 req'd)
   - b. Pipe plug 1/8" NPT – (2 req'd)
   - c. Mounting lug (3 req'd)
   - d. Long screw (3 req'd)
   - e. Short screw (3 req'd)
   - f. Stud (solid)
   - g. Stud washer
   - h. Stud nut
   - i. *Stud (hollow)*

Ordering Instructions:

When corresponding with the factory regarding Magnehelic® gage problems, refer to the call-out numbers in this view. Be sure to include model number, pressure range, and any special options. Field repair is not recommended; contact the factory for repair service information.

MAGNEHELIC® INSTALLATION

1. Select a location free from excessive vibration and where the ambient temperature will not exceed 140°F. Also, avoid direct *sunlight which* accelerates discoloration of the clear plastic cover. Sensing lines may be run any necessary distance. Long tubing lengths will not affect accuracy but will increase response time slightly. Do not restrict lines. If pulsating pressures or vibration cause excessive pointer oscillation, consult the factory for ways to provide additional damping.

2. Most gages may be installed in any position, scale vertical or horizontal, without affecting its accuracy as long as it is properly re-zeroed in the position in which it is being used. The exceptions are models 2000-00 (0-.25" w.c.) which can be used only in a vertical position and 2000-0 (0-.50" w.c.) which must be specially calibrated for positions other than vertical. The same applies to metric equivalents to these two ranges. All standard gages are originally calibrated with diaphragm vertical.

3. Surface Mounting

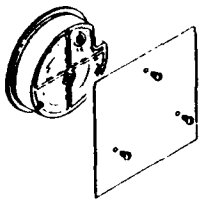

Locate mounting holes, 120° apart on a 4-1/8" *dia circle. Use* No. 6-32 machine screws of appropriate length.

4. Single Stud Surface Mounting

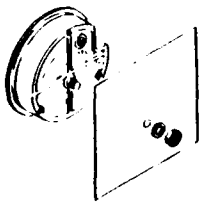

Locate mounting hole. Use double ended 1/8" thread stud, Part No. 360-1, securely inserted in center *low pressure opening*. Mount through a bulkhead with washer and jam nuts as in sketch. As an alternate, mount the gage with the stud using a 1/8" pipe thread flange or other 1/8" pipe thread opening.

5. Flush Mounting

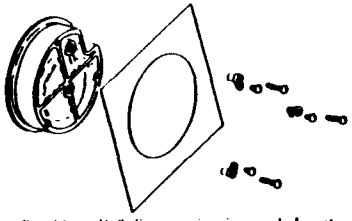

Provide a 4½" dia. opening in panel. Insert gage and secure in place with No. 6-32 machine screws of appropriate length, with adaptors, Part No. 360c, firmly secured in place. To mount gage on 1¼"-2" pipe, order *optional* A-610 pipe mounting kit.

6. To zero the gage after installation

Set the indicating pointer exactly on the zero mark, using the external zero adjust screw on the cover at the bottom. Note that the zero check or adjustment can only be made with the high and low pressure taps both open to atmosphere.

Operation

Positive Pressure: Connect tubing from source of pressure to either of the two high pressure ports. Plug the port not used. Vent one or both low pressure ports to atmosphere.

Negative Pressure: Connect tubing from source of vacuum or negative pressure to either of the two low pressure ports. Plug the port not used. Vent one or both high pressure ports to atmosphere.

Differential Pressure: Connect tubing from the greater of two pressure sources to either high pressure port and the lower to either low pressure port. Plug both unused ports.

When one side of gage is vented in a dirty, dusty atmosphere, we suggest an A-311 *Filter* Vent Plug be installed in the open port to keep inside of gage clean.

a. For portable use or temporary installation, *use 1/8" pipe thread to rubber tubing adapter* and connect to source of pressure with rubber or Tygon tubing.

b. For permanent installation, 1/4" O.D., or larger, copper or aluminum tubing is recommended. See accessory bulletin S-101 for fittings.

MAINTENANCE

Maintenance: No lubrication or periodic servicing is required. Keep case exterior and cover clean. Occasionally disconnect pressure lines to vent both sides of gage to atmosphere and re-zero. Optional vent valves, (bulletin S-101), should be used in permanent installations.

Calibration Check: Select a second gage or manometer of known accuracy and in an appropriate range. Using short lengths of rubber or vinyl tubing, connect the high pressure side of the Magnehelic gage and the test gage to two legs of a tee. Very slowly apply pressure through the third leg. Allow a few seconds for pressure to equalize, fluid to drain, etc., and compare readings. If accuracy unacceptable, gage may be returned to factory for recalibration. To calibrate in the field, use the following procedure.

Calibration:

1. With gage case, P/N 1, held firmly, loosen bezel, P/N 4 by turning counterclockwise. To avoid damage, a canvas strap wrench or similar tool should be used.
2. Lift out plastic cover and "O" ring.
3. Remove scale screws and scale assembly. Be careful not to damage pointer.
4. The calibration is changed by moving the clamp, P/N. 70-b. Loosen the clamp screw(s) and move slightly toward the helix if gage is reading high, and away if reading low. Tighten clamp screw and install scale assembly.
5. Place cover and O-ring in position. Make sure the hex shaft on inside of cover is properly engaged in zero adjust screw, P/N 230-b.
6. Secure cover in place by screwing bezel down snug. Note that the area under the cover is pressurized in operation and therefore gage will leak if not properly tightened.
7. Zero gage and compare to test instrument. Make further adjustments as necessary.

Caution: If bezel binds when installing, lubricate threads sparingly with light oil or molybdenum sulphate compound.

Trouble Shooting Tips:

• *Gage won't indicate or is sluggish.*

1. Duplicate pressure port not plugged.
2. Diaphragm ruptured due to overpressure.
3. Fittings or sensing lines blocked, pinched, or leaking.
4. Cover loose or "O" ring damaged, missing.
5. Pressure sensors, (static tips, Pitot tube, etc.) improperly located.
6. Ambient temperature too low. For operation below 20°F, order gage with low temperature, (LT) option.

• *Pointer stuck-gage can't be zeroed.*

1. Scale touching pointer.
2. Spring/magnet assembly shifted and touching helix.
3. Metallic particles clinging to magnet and interfering with helix movement.
4. Cover zero adjust shaft broken or not properly engaged in P/N 230-b adjusting screw.

We generally recommend that gages needing repair be returned to the factory. Parts used in various sub-assemblies vary *from one range of gage to another, and* use of incorrect components may cause improper operation or failure. Gages repaired at the factory are carefully calibrated and tested to assure "like-new" operation. After receipt and inspection, we will be happy to quote repair costs before proceeding.

Consult factory for assistance on unusual applications or conditions.

Use with air or compatible gases only.

Series RM Rate-Master® Flowmeters

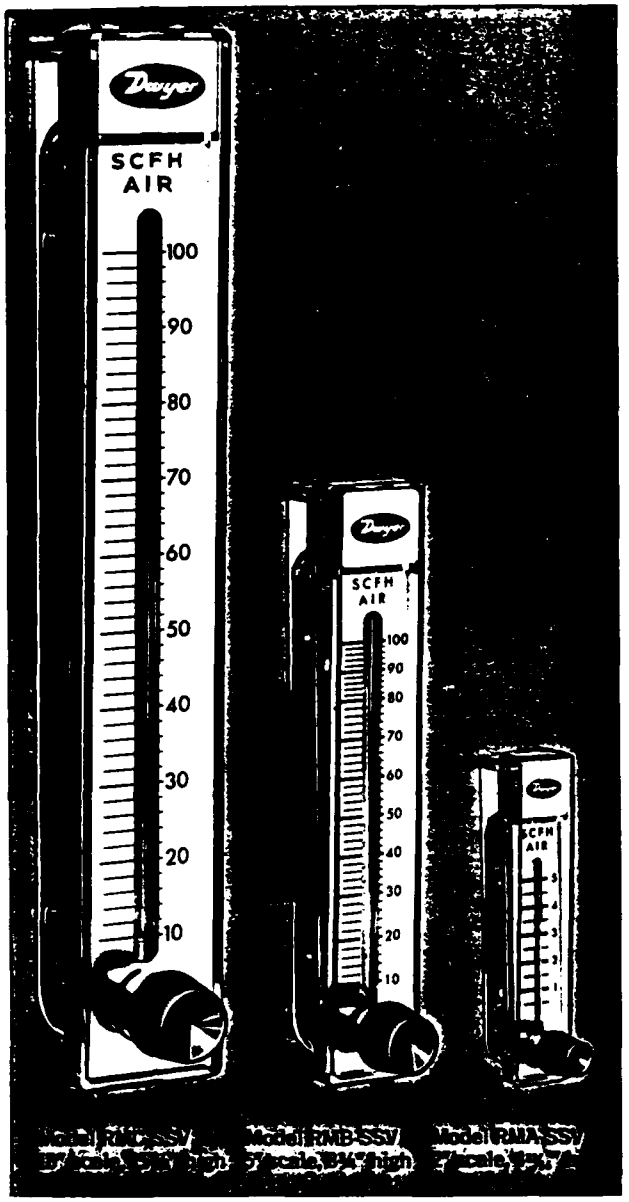

Molded of tough polycarbonate plastic. Used to indicate or manually control air or gas flow from .1-1800 SCFH... water flows to 8 GPM

The Dwyer Rate-Master line of direct reading precision flowmeters incorporates many unique user features at moderate cost. These low cost flowmeters are ideal for general use.

Easy to read design – The direct reading scales eliminate troublesome conversions. The scales are brushed aluminum, coated with epoxy and the graduations are on both sides of the indicating tube. Special integral flow guides stabilize the float throughout the range to keep it from hunting or wandering in the bore. The float is highly visible against a white background.

Construction assures accuracy–All Rate-Master flowmeter bodies are injection molded of tough, clear, shatter-proof polycarbonate plastic around a precision tapered pin. Critical internal diameter of the variable orifice tube is held within ± 0.0004". The result is accurate and repeatable readings. The single piece plastic body is mounted to a stainless steel backbone into which pipe thread inserts are welded to absorb piping torque. Precision metering valves of brass or stainless steel (specify BV or SSV on order) are available as an optional extra and permit precise flow adjustments. For vacuum applications, Model RMA units are available with top mounted valves (specify TMV). The small Series RMA models are accurate within ± 4% of full scale reading; Series RMB within ± 3%; large Series RMC within ± 2%.

Installation is simple – The Rate-Master can be neatly through-panel mounted to keep flow tube centers in the same plane as the panel surface or surface mounted on the panel by means of tapped holes in the backbone. When through-panel mounted, the bezel automatically positions the instrument at the correct depth in the panel cutout. Surface mounted units can also be held in place by the piping. All mounting hardware plus installation and operating instructions are included.

Cleaning is easy–To release the plastic flowmeter body from the stainless steel backbone, just remove four screws. Pipe thread flow connections remain undisturbed. Remove the slide cover and the plug ball stop, clean the flow tube with soap and water and reassemble. It's that simple.

Specials – See page 5 for typical examples of special ranges, scales, mounting arrangements, etc., available on special order, or in OEM quantities.

Easy-to-interchange bodies – Within a given Series, Rate-Master flowmeter bodies can be instantly interchanged. Simply "unplug" the body from backbone and replace it with another. "O" rings provide a tight seal on inlet and outlet. Piping remains undisturbed. Interchangeability is useful where different scale ranges are sometimes required at the same location in the laboratory or plant.

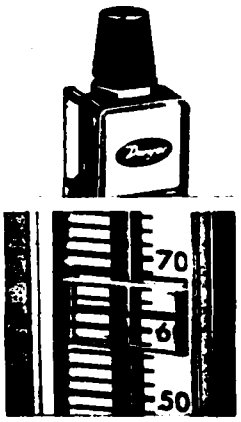

Top Mounted Metering Valves – Same precision construction for vacuum applications.

Adjustable pointer flags–Red-lined pointer flags provide quick visual reference to a required flow level. Of clear plastic, they snap into place inside bezel and slide to desired level.

SPECIFICATIONS	
Meter Body, Bezel and Tube	Polycarbonate
Wetted Metal Parts	Stainless Steel (except for optional brass valves)
Floats	St. Steel, Blk. Glass, Alum., K Monel
Float Stops	Polycarbonate
Pipe Connections	Model RMA, ⅛"; Model RMB, ¼"; Model RMC, ½" NPT
"O" Rings	Neoprene and Buna N
Fittings	Stainless Steel brazed to Stainless Steel backbone plate
Rivets	Stainless Steel, set into slots
Scale	Brushed Aluminum–Clear Epoxy Coated
Knobs	ABS Plastic
Pressure Rating	RMA 100 P.S.I., RMB 70 P.S.I., RMC 35 P.S.I. max.
Temperature Rating	To 130° F. maximum
Accuracy	Model RMA, 4%; Model RMB, 3%; Model RMC, 2% of full scale

	OPTIONS AND ACCESSORIES	CODE
Metering Valve	Brass	BV
	Stainless Steel	SSV
Top Mounted Valve	Stainless Steel–available only on RMA for air (vacuum applications)	TMV
Pointer Flag	Polycarbonate	PF

Series RM RATE-MASTER® Models and Ranges

Model RMA–2" Scale		Model RMB–5" Scale		Model RMC–10" Scale	
Range SCFH Air	Ordering No.	Range SCFH Air	Ordering No.	Range SCFH Air	Ordering No.
.05-.5	1	.5-5	49	5-50	101
.1-1	2	1-10	50	10-100	102
.2-2	3	2-20	51	20-200	103
5-5	4	5-50	52	40-400	104
1-10	5	10-100	53	60-600	105
2-20	6	20-200	54	100-1000	106
5-50	7	40-400	55	120-1200	107
10-100	8	50-500	56	180-1800	108
15-150	9	60-600	57	**SCFM Air**	
20-200	10	**Gal. Water per hour**		1-10	121
CC Air/min.				2-20	122
5-50	151*	1-12	82	3-30	123
5-100	150*	1-20	83	**Gal. Water per hour**	
30-240	11	4-40	84		
50-500	12	10-100	85	1-20	134
100-1000	13			8-90	135
200-2500	14			**Gal. Water per min.**	
LPM Air					
5-5	26			1-1	141
1-10	21			2-2.2	142
2-25	22			3-3.6	143
5-50	23			6-6	144
5-70	24			1-8	145
10-100	25				
CC Water/min.					
5-50	32				
10-110	33				
20-300	34				
Gal. Water/hr.					
1-11	42				
2-24	43				
4-34	44				
5-50	45				

*Accuracy ± 8%

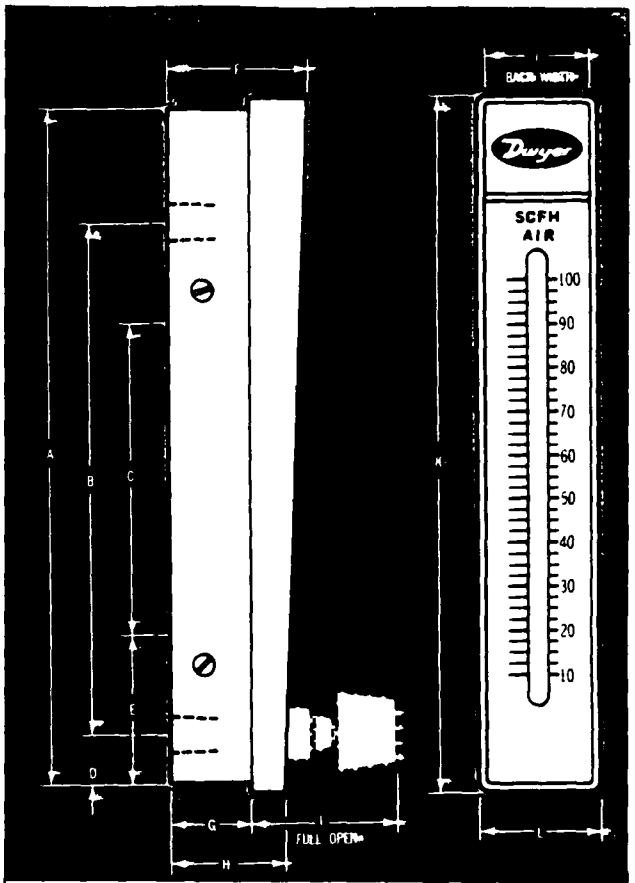

DIMENSIONS–IN INCHES

	Model RMA	Model RMB	Model RMC
A	4 9/16	8½	15⅛
B	3 ⅛ NPT Conn.	6 7/16 ¼ NPT Conn.	12¼ ½ NPT Conn.
C	1⅝ 10-32 Thds.	3 15/16 ¼-20 Thds.	8¾ ⅜-24 Thds.
D	⅜	⅝	1
E	1 1/16	1⅞	2¾
F	1 3/16	1¾	2¼
G	¾	1	1 7/16
H	1	1 7/16	1 31/32
I (OPEN)	1⅜	1 13/16	2½
	(BV or SSV MODELS ONLY)		
J	¾	1¼	2
K	4 13/16	8¾	15⅜
L	1	1½	2¼

How To Order

1. Select model desired by letter designation. RMA, RMB, or RMC.
2. Specify range desired by adding the order number after a dash following the letter designation. Example RMA-6.
3. If additional features are required, and available, add the option designation to the basic model code –e.g.: BV for Brass Valve, SSV for Stainless Steel Valve, and TMV for Top Mounted Valve. For example, RMA-6-SSV is the 2" scale flowmeter range No. 6 with a stainless steel valve.
4. Add accessories as desired.

B-11

CONVERSION CURVES FOR GASES

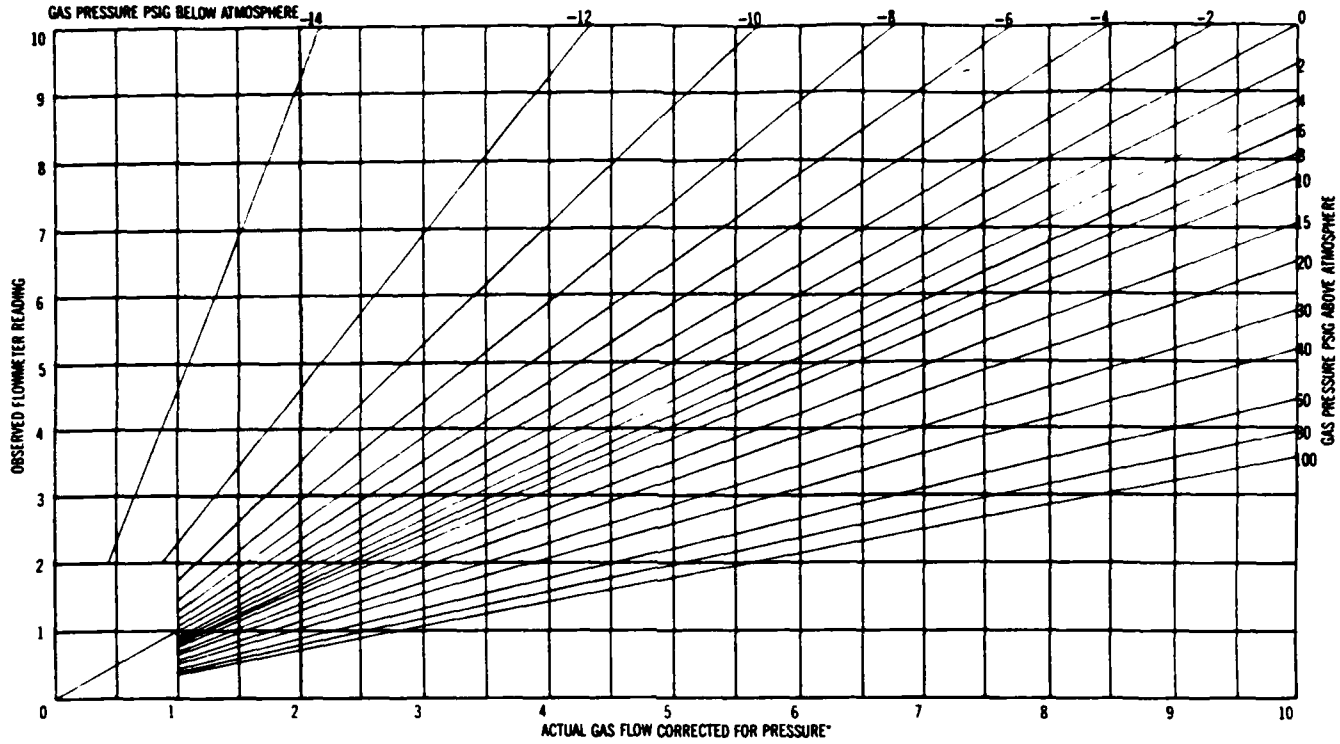

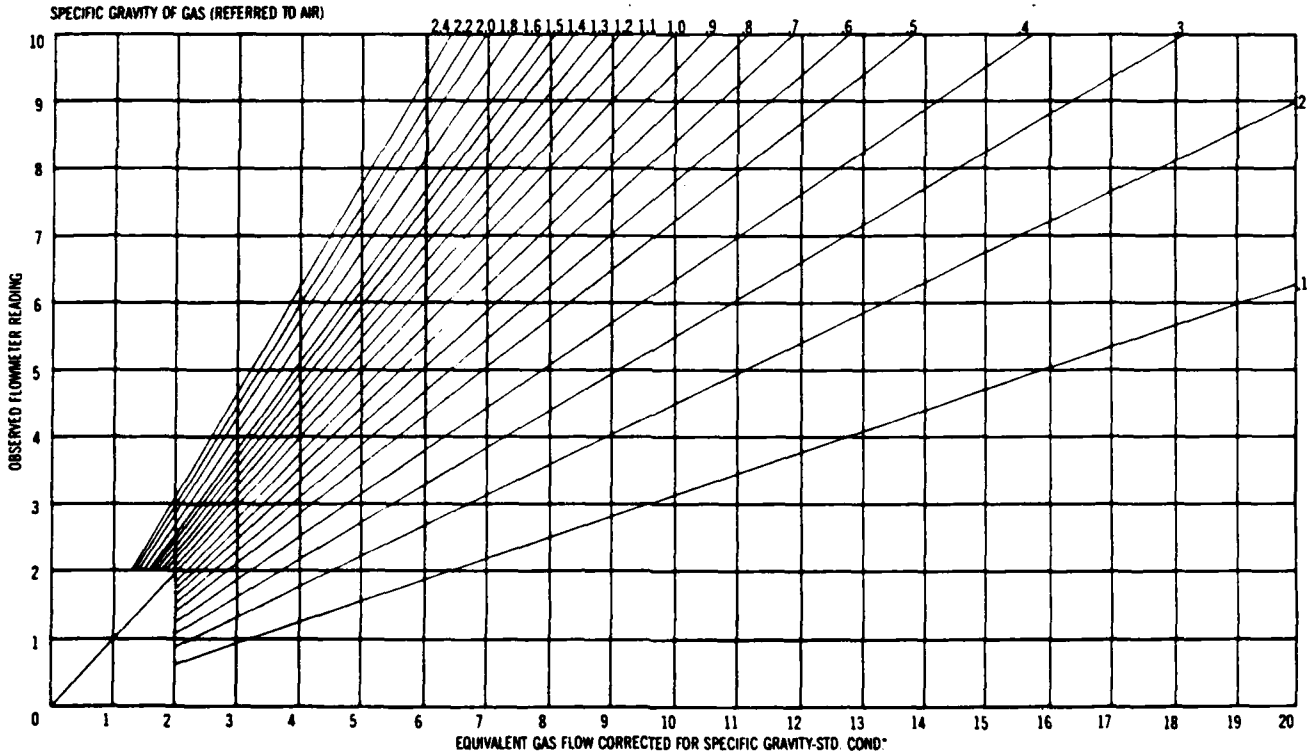

If more convenient, approximate correction factors may be determined using the following formulas.

A. Pressure: $Q_2 = Q_1 \times \sqrt{\frac{P_2}{P_1}}$

where Q_1 = Observed flowmeter reading
Q_2 = Actual flow corrected for pressure
P_1 = Standard atmospheric pressure, 14.7 PSI
P_2 = Actual pressure, 14.7 PSI + pressure in PSI inside flowmeter. Measured at outlet on all but TMV units. Inlet pressure on TMV models.

B. Specific Gravity: $Q_2 = Q_1 \times \sqrt{\frac{1}{S.G.}}$

where Q_1 = Observed flowmeter reading
Q_2 = Actual flow corrected for specific gravity
1 = Specific gravity of air
S.G. = Specific gravity of gas being used in flowmeter originally calibrated for air.

NOTE: The corrections shown in the curves and in the formulas are for variations in specific gravity and internal pressure* only. Further correction may be necessary for variations in viscosity and changes in type of flow from laminar to turbulent or vice versa. This is particularly true in the case of extremely low flows of the lighter gases. Nevertheless these charts and correction factors can be quite useful when dealing with small changes in pressure* and specific gravity.

*Measured at discharge on all but TMV units. Inlet pressure on TMV models

Dwyer® Flowmeters and Sight Flow Indicators

How flowmeters work:

Variable area flowmeters are basically vertical internally-tapered tubes mounted with the large end at the top. A float or rotor with an outer diameter slightly less than the minimum diameter of the tube is placed inside the tube. The clearance space between the float and the tube forms an annular passage or orifice. As the tube is tapered, the area of this orifice is larger when the float is near the top than it is when the float is near the bottom. By connecting the tube into a fluid flow line so flow direction is from bottom to top, the float will move upward and be supported at a point where the orifice is just large enough to pass the fluid flowing through the system.

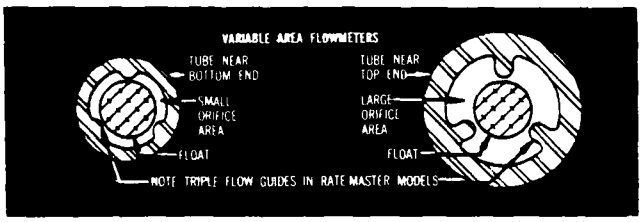

Several Forces are involved – The precise position of the float within the tube is determined by several forces acting on it. These forces are: 1. The weight of the float; 2. The velocity pressure of the flowing fluid multiplied by the area of the float; 3. Buoyancy of the float (weight of fluid volume displaced by the float); 4. Viscous aerodynamic or hydrodynamic drag of the fluid on the float. The float's weight acts downward – while velocity pressure, buoyancy and drag all act upward on it.

Read-out and scales – By making the tube transparent so that float position can be seen and by providing a scale along side, we may "read" the float position in terms of numbers on the scale. These scale numbers can be of two types: 1. Of an arbitrary nature (by themselves they mean nothing, but become meaningful when compared with a calibration curve) or: 2. They can be precalibrated for direct reading; to show the actual volume flow (in cfm, cc per minute, etc.) of the fluid for which the flowmeter is calibrated.

Limiting factors – Although the basic relationship outlined above is linear, certain fluid properties tend to modify this relationship. These changes are accentuated where the variable orifice formed between float and tube becomes either very large or very small. For example...

Sonic velocity – Where the orifice is particularly large and is combined with a heavy float, velocities of a gas or other fluid through the orifice area can approach sonic velocity. In this velocity range, reflected shock waves cause the float to become unstable, and it will typically hunt from side to side and from top to bottom within the bore. At best, this condition makes it impossible to take a reading, and at worst may even destroy the flowmeter. The addition of flow guides (built into certain Dwyer Rate-Master™ flowmeters) can often improve the stability and performance of the system by channeling the flow into multiple streams that equalize dynamic effects and preventing oscillation of the float. This has the net effect of moving the limit of satisfactory operation upward, and thereby expanding the range and accuracy we can achieve with any given flowmeter tube.

Laminar flow – In flowmeters where the orifice area is extremely small, the conditions result in smooth flow, or laminar flow. Other factors which contribute to the transition to laminar flow are low velocity (often associated with a lightweight float), low density or specific gravity and high viscosity of the flowing fluid. When laminar flow conditions prevail, a greatly expanded scale is usually required. Meters operating in the laminar flow area are very difficult to manufacture and calibrate to the degree of accuracy usually expected of variable area flowmeters.

Turbulent flow – Most variable area flowmeters operate in the turbulent flow range which occurs below sonic velocities and above the laminar flow range. In turbulent flow, the flowing fluid particles move in random paths within the stream – rather than in violent shock waves as in sonic flow or very smooth parallel paths as in laminar flow. In turbulent flow, variables follow the relationships shown in the curves on Page 4. These curves are quite accurate for small changes in pressure and specific gravity. For large changes or where a change in viscosity is involved, it is much better to have the flowmeter recalibrated for the specific conditions under which it will be used.

Reynolds Numbers – Reynolds Numbers are useful in the study of fluid behavior and are quite helpful in separating laminar and turbulent flow. The Reynolds Number of a fluid flow system is described as a dimensionless index. It is equivalent to the diameter of the orifice in feet times the average velocity of the fluid in feet per second times the density of the fluid in pounds per cubic foot divided by the absolute viscosity in pounds per second foot. A system operating with a Reynolds Number of less than 2000 is said to be subject to laminar flow, whereas Reynolds Numbers above 3000 are clearly in the turbulent flow area.

How sight flow indicators work:

A sight flow indicator basically consists of a small housing equipped with a glass window which is inserted in a run of pipe to observe the flow of the fluid in the pipe. To enhance the visibility of the flow, a spinner is often incorporated in the indicator. The axis of the spinner is offset from the center of the flow stream so that fluid impinging on the spinner vanes causes it to turn. The spinner also aids in the detection of low flows as well as providing visibility of flow from a distance. In addition, the speed of rotation gives a relative indication of flow velocity. Midwest Sight Flow Indicators are also available with hinged flappers instead of spinners to indicate bi-directional flow.

Sight flow indicators can be provided with a single window on the front of the indicator or double windows, one on the front and one on the back of the indicator. Double window units are best when observing the clarity or color of a liquid. Midwest single window units are always equipped with spinners to provide for observation of clear fluid flows at the lowest cost.

Vertical tube-type sight flow indicators consist of a clear glass tube, equal to or greater than the diameter of the pipe into which it is inserted, and are utilized to observe high flow rates in vertical pipe runs. No spinners or other type of detection devices are incorporated in these units. As a result, they offer no significant resistance to flow and therefore provide the lowest pressure drop of any type sight flow indicator.

Midwest Sight Flow Indicators are available with special materials to meet various applications. Optional materials are available for the sealing gaskets, spinners, and housings or flanges.

Fraunhofer-Institut · ITA · Institutsteil Grafschaft · D-5948 Schmallenberg

Dr. William D. Farthing
Physics Division
Southern Research Institute
P.O. Box 3207/A

Birmingham, Alabama 35255

U.S.A.

Fraunhofer-Institut für Toxikologie und Aerosolforschung
Institutsteil Grafschaft
Institutsleitung:
Dr. Hubert Oldiges
Prof. Dr. Werner Stöber
N. N.

Grafschaft/Hochsauerland
D-5948 Schmallenberg
Telefon 02972/494-96

011-49-2972/494-96

Ihr Zeichen: Ihre Nachricht: Unser Zeichen: Ho/hei Bearbeiter:

Durchwahl:

Betrifft:

Schmallenberg, 20. Jan. 1983

Virtual impactor

Dear Dr. Farthing,

thank you very much for your telephone call on 18 January 1983.

We offer you a virtual impactor according to figure 1 of the article by Masuda, Hochrainer and Stöber in the Journal of Aerosol Science 10 (1979), 275-287. The material of the impactor shall be brass.

The price is DM 6804,- and includes material, manufacturing and shipment by air mail. The delivery time will be 3 month after receipt of your order.

With kind regards,

K. Schoene D. Hochrainer

(Dr. K. Schoene) (Dr. D. Hochrainer)

Enclosure: Reprint from J. Aerosol Science

Bankverbindung:
Deutsche Bank, München
Konto Nr. 75-21933
BLZ 700 700 10

Postscheck München
Konto-Nr. 2525-809
BLZ 700 100 80

Fraunhofer-Gesellschaft
zur Förderung
der angewandten
Forschung e. V.

Vorstand:
Dr. rer. nat. Heinz Keller, Präsident
Dr. jur. Eberhard Schlephorst
Dr. rer. pol. Hans-Ulrich Wiese

J. Aerosol Sci. Vol. 10, pp. 275 to 287
© Pergamon Press Ltd. 1979 Printed in Great Britain.

0021-8502/79/0501-0275 $02.00/0

AN IMPROVED VIRTUAL IMPACTOR FOR PARTICLE CLASSIFICATION AND GENERATION OF TEST AEROSOLS WITH NARROW SIZE DISTRIBUTIONS

H. MASUDA
Kyoto University, Kyoto 606, Japan

D. HOCHRAINER and W. STÖBER
Institut für Aerobiologie der Fraunhofer-Gesellschaft,
5948 Schmallenberg-Grafschaft, West Germany

(*Received* 13 *November* 1978)

Abstract – The virtual impactor performance has been improved with regard to its separation characteristics by a new design embedding the aerosol flow between a core and an enveloping sheath of clean air flow. With this feature, the new impactor has successfully overcome the intrinsic disadvantage of conventional designs which always have finite separation efficiencies, even if zero inertia particles are sampled. Furthermore, various and high degrees of precision in size separation were established by adjusting the clean air flow rates. Test aerosols with narrow size distributions were obtained by passing paraffin aerosols, coal dust, slate powder and asbestos fibers through a series of two units of the new virtual impactor.

1. INTRODUCTION

The generation and the measurement of aerosols are basic experimental topics in aerosol science and technology. They play an important role in the experimental assessment of the health hazards associated with inhalable atmospheric particles. In such studies as well as for the investigation of size-related dust deposition in pipes or for the examination of the efficiency of industrial dust collectors and dust separators, it is desirable to have test aerosols of narrow size distribution. Furthermore, it is sometimes required that the test aerosol consists of the same material as the actual aerosol to be sampled, for example, coal dust.

In order to obtain test aerosols with such desirable characteristics, a special feeder discharging continuously small amounts of fine particles has been developed (Masuda *et al.*, 1976) and several methods of powder dispersion have been studied (Masuda *et al.*, 1977). In general, the size distribution of an aerosol produced by dispersing fine particles covers a rather wide size range and is not immediately suitable as a test aerosol. Instead, it is necessary to separate the desired small size range from the aerosol to obtain a test aerosol with narrow size distribution.

An instrument suitable for this purpose is the virtual impactor as developed by Conner (1966) which leaves the coarse fraction of particles suspended in an air flow. The separation efficiency of the virtual impactor has been calculated numerically and tested with large-scale equipment (Yoshida *et al.*, 1978). It became apparent that the quality of the size separation of this instrument is not as good as for conventional solid-plate impactors. In particular, the separation efficiency for zero-inertia particles is determined by the ratio of the straight undeflected flow rate to the total flow rate and cannot vanish as required. Therefore, the virtual impactor needs improvement with regard to the size separation achievable in this type of instrument.

In applications of impactors in ambient air sampling (Dzubay and Stevens, 1975), two-stage dichotomous virtual impactors have been utilized. Such impactors have better separation characteristics (Loo *et al.*, 1976) because the separation efficiency is determined by the product of the separation efficiencies of each stage. For similar applications, a spectral impactor utilizing a clean air flow for winnowing of the aerosol, has been developed to get

size-separated deposits in a single-stage impactor (Zebel and Hochrainer, 1972). This method appeared to be suitable to improve the virtual impactor.

In this study, the virtual impactor has been modified by embedding the aerosol flow between a core and an enveloping sheath of clean air flow. It has been shown that the quality of the size separation is adjustable by changing the ratios of the flow rates. Furthermore, narrow size fractions of paraffin aerosol, coal dust, slate powder and asbestos aerosols have been obtained in experiments employing two units of the new virtual impactor in series.

2. DESIGN OF THE IMPROVED VIRTUAL IMPACTOR

Figure 1 shows the new virtual impactor. Aerosol is drawn in through entrance (2) while clean air passes through entrances (1) and (3) so as to attain an anular flow of aerosol. The merging flow is then accelerated by the narrowing cross-section of the duct, thus, giving adequate momentum to the aerosol particles. Finally, the particles are separated according to their aerodynamic diameters at the gap between the jet (4) and the nozzle (5). The finer aerosol leaves the impactor through the suction tube (6), while the coarser aerosol exits through the connection tube (7). The nozzle gap can be varied by an adjustment screw (8). The core flow of clean air is streamlined by means of a honeycomb (9) made from straws (3 mm in diameter). Two rings (10) each with 60 holes of 0.8 mm dia. force the outer clean air into laminar flow and effect a uniform flow velocity independent of the angular coordinate. These rings are fixed on the inner cylinder and O-rings are used to prevent air leakage through unexpected gaps between the laminator rings and the impactor walls. Unchecked air leakage may distort the annulus of the aerosol flow, resulting in less precise separation. The aerosol flow is also laminarized by two rings (11) each with 36 holes of 1.6 mm dia. Port (12) is a pressure tap.

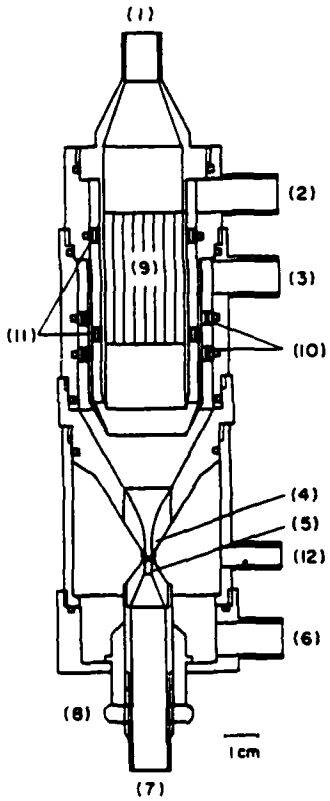

Fig. 1. Improved virtual impactor.

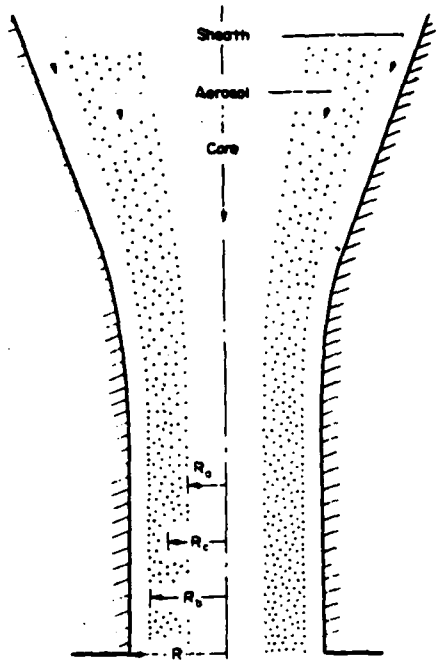

Fig. 2. Schematic graph of annular aerosol flow in the jet.

3. THEORETICAL ASPECTS OF THE SIZE SEPARATION EFFICIENCY

When a monodisperse aerosol is sampled with the impactor, the accelerated particles within a concentric circle of critical radius R_c are separated from the main flow and pass into the straight undeflected flow through the nozzle (5). Then, the separation efficiency η is defined by

$$\eta = \frac{\int_0^{R_c} 2\pi unr\,dr}{\int_0^{R} 2\pi unr\,dr}, \tag{1}$$

where n is the number concentration of aerosol particles, u is the air velocity and R is the jet radius. The distribution of the particles in the annular aerosol flow is assumed to be uniform, i.e.

$$n(r) = \begin{cases} 0: & 0 \le r < R_a \\ \text{constant}: & R_a \le r < R_b \\ 0: & R_b \le r \le R \end{cases} \tag{2}$$

As indicated in Fig. 2, R_a and R_b are the inner and the outer radius of the annular aerosol flow in the jet (4), respectively.

From equations (1) and (2), it is clear that

$$\eta = 0 \quad \text{for} \quad 0 \le R_c < R_a \tag{3}$$

and

$$\eta = 1 \quad \text{for} \quad R_b < R_c \le R. \tag{4}$$

If the critical radius R_c is between R_a and R_b, then the separation efficiency becomes:

$$\eta = \frac{\int_{R_c}^{R_b} ur\,dr}{\int_{R_a}^{R_b} ur\,dr} = \frac{\int_0^{R_c} ur\,dr \int_0^{R} ur\,dr}{\int_0^{R} ur\,dr \int_{R_a}^{R_b} ur\,dr} - \frac{\int_0^{R_a} ur\,dr}{\int_{R_a}^{R_b} ur\,dr}, \tag{5}$$

which can be rewritten with the flow rates as

$$\eta = \eta_0 \frac{Q_t}{Q_p} - \frac{Q_1}{Q_p} = \eta_0 \alpha - \beta; \quad R_a \le R_c \le R_b, \tag{6}$$

where Q_t is the total flow rate, Q_p is the aerosol sample flow rate and Q_1 is the clean air core flow rate in the center. The factors α and β in equation (6) are defined as flow rate ratios

$$\alpha = Q_t/Q_p, \quad \beta = Q_1/Q_p \tag{7}$$

and

$$\eta_0 = \frac{\int_0^{R_c} ur\,dr}{\int_0^{R} ur\,dr} = \frac{Q_x}{Q_t} \tag{8}$$

is the separation efficiency of a conventional virtual impactor which does not have any clean air flow. Q_x is the flow rate within the critical trajectories. When the velocity distribution is uniform, equation (8) reads

$$\eta_0 = \left(\frac{R_c}{R}\right)^2. \tag{9}$$

This indicates that the separation efficiency η of the new virtual impactor can be considered as being composed of a separation efficiency η_0 of a conventional virtual impactor and the flow rate ratios α and β.

The slope of the separation characteristic may be expected to depend upon the flow rate ratio α, while the value of β determines the critical Stokes number (see equation (16)) $\psi = \psi_0$ where $\eta = 0$.

In order to obtain the critical Stokes number ψ_0, equation (6) will require

$$\beta = \alpha\eta_0 \quad \text{for} \quad \psi = \psi_0 \tag{10}$$

or by definitions,

$$Q_1 = Q_x \tag{11}$$

which is satisfied by $R_a = R_c$. Then, if Q_3 is the undeflected flow rate through the nozzle (5), the condition for $\eta = 0$ is necessarily

$$Q_3 \le Q_x \tag{12}$$

because no higher flow rate than Q_x can pass through the nozzle if the flow shall not contain aerosol particles.

For $\psi < \psi_0$, equation (6) will turn negative and does not yield physically meaningful data. However, for $\psi_0 \to 0$, the conventional virtual impactor has a finite efficiency

$$\eta_0 = \frac{Q_3}{Q_t} \tag{13}$$

and it follows from equation (10) that

$$\beta \ge \alpha \frac{Q_3}{Q_t}. \tag{14}$$

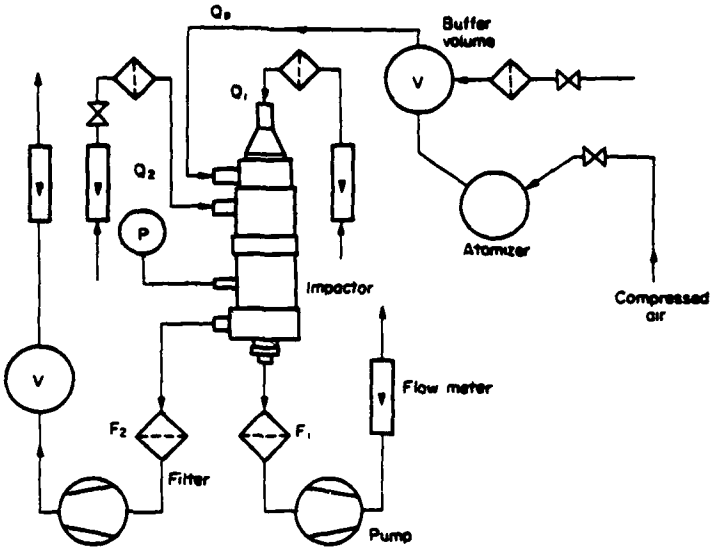

Fig. 3. Scheme of the experimental arrangement.

4. EXPERIMENTAL ARRANGEMENTS AND PROCEDURES

The experimental arrangement for testing the performance of the new virtual impactor is shown in Fig. 3. The performance tests were carried out with latex aerosols (Dow Chemical Co.). The air flow rates were measured by rotameters which had been calibrated with a gas meter. The two separate aerosols leaving the instrument were collected on the membrane filter F1 and F2 (Sartorious-Membranfilter GmbH). After sampling, the filters were exposed to acetone vapor for about 2 hr in order to make the filter foil transparent. Subsequently, the particles collected on the filters were counted under a microscope and the separation efficiency was calculated by

$$\eta = \frac{N_1}{N_1 + N_2}, \tag{15}$$

where N_1 is the number of coarse particles collected on the filter F_1 and N_2 is the number of fine particles collected on the filter F_2. At a total flow rate of 20 l./min the wall losses, which may depend on flow rate, particle size and particle material (Loo *et al.*, 1976; McFarland *et al.*, 1978) were only 0.6 and 0.2% for 0.822 and 1.10 μm latex particles, respectively.

In all the experiments, the ratio of the straight undeflected flow rate Q_3 to the total flow rate Q_t was held constant at 0.1. However, the total flow rate was varied between 5 and 30 l./min. The separation efficiencies obtained were expressed in terms of the square root of the Stokes number ψ, a dimensionless inertia parameter giving

$$\sqrt{\psi} = \sqrt{\frac{\rho_p u_0 C}{18\,\mu D}}\, D_p, \tag{16}$$

where D is the jet diameter $2R$, D_p is the aerodynamic particle diameter, u_0 is the mean air velocity, μ is the air viscosity and ρ_p is the particle density. The Cunningham's slip correction factor C is given (e.g. Fuchs, 1964) by

$$C = 1 + 2\frac{\lambda}{D_p}\left\{1.23 + 0.41\exp\left(-0.44\frac{D_p}{\lambda}\right)\right\}, \tag{17}$$

where λ is the mean free path length of the air molecules.

Another set of experiments involved two of the new virtual impactors in series. This

arrangement aimed at the generation of quasi-monodisperse aerosols. Paraffin particles, coal dust (Tremonia II, fine*; $\rho_p = 1.32\ g/cm^3$, measured by the pycnometer method), slate powder (IKO-Schiefer*; $\rho_p = 2.78\ g/cm^3$, measured by the pycnometer method) and asbestos fibers (U.I.C.C. standard-Amosite) were used as test materials. The coal dust and the slate powder were brought into aqueous suspension by small amounts of soap and atomized with compressed air. However, the asbestos aerosol was generated from a fluidized bed by mechanical vibrations (Spurny *et al.*, 1975). Other experimental conditions are listed in Table 1.

Table 1. Experimental conditions

Latex particles:	$D_p = 0.52, 0.727, 0.822, 1.10, 2.02\ \mu m$
	$\rho_p = 1.05\ g/cm^3$
Mean air velocity:	$u_0 = 30–150\ m/sec$
Stokes number:	$\psi = 0.03–1.5\ (-)$
Flow Reynolds number in impactor jet:	$Re = 4000–20000\ (-)$
Jet diameter:	$D = 0.2\ cm$
Gap between jet and lower nozzle:	$0.05\ cm$

5. RESULTS AND DISCUSSION

Figure 4 shows the experimental results obtained with the new impactor when no clean air was used. In the low inertia region ($\sqrt{\psi} < 0.4$), the data are almost on the theoretical curve calculated by assuming potential flow (Yoshida *et al.*, 1978). However, with increasing inertia, the experimental separation efficiency increases faster than predicted by the theory. This tendency is similar to that obtained by other investigators (Conner, 1966; Yoshida *et al.*, 1978). Such discrepancy between data and theory may be explained by the fact that the particle trajectories will deviate from the streamlines in the curved section of the narrowing

25.3 (1/8)

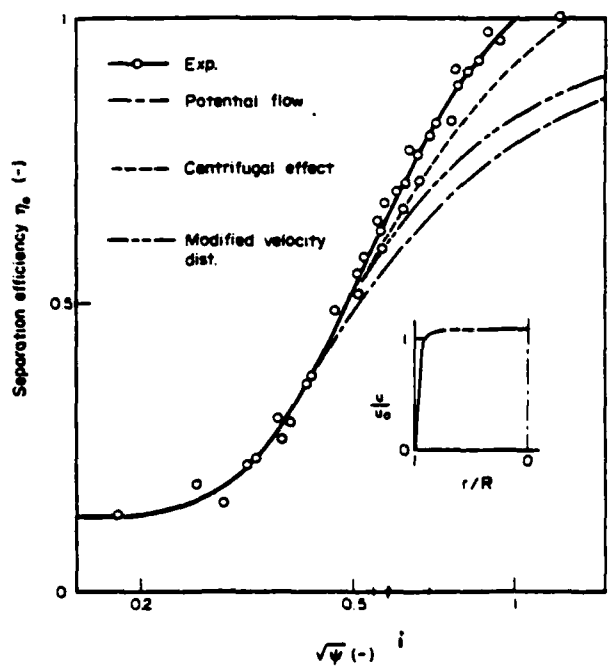

Fig. 4. Separation characteristics of the new virtual impactor without clean air flows (small frame gives the modified velocity distribution).

* The generous assistance of the Steinkohlenbergbauverein, Essen, in obtaining the samples and the information on the densities is gratefully acknowledged.

duct for the merged flow, especially in the vicinity of the cylindrical section of the jet (4). Here, the radial flow components toward the center must decelerate so that the particle inertia will bring the trajectories closer to the center axis. In order to estimate the deviation, it may be assumed that the centrifugal force $m_p u_0^2/r_0$ (m_p: particle mass, r_0: radius of curvature of the curved section of the jet) will act upon a particle within a range of one jet diameter above the cylindrical section of the jet. The solution of the equation of motion is represented by

$$\bar{\delta} = \frac{\delta}{D} = \frac{\psi}{\bar{r}_0}\{\bar{t} + \psi e^{-\bar{t}/\psi} - \psi\}, \tag{18}$$

where δ is the deviation of the particle trajectory at the jet inlet, $\bar{r}_0 = r_0/D$ and $\bar{t} = tu_0/D$. $\bar{r}_0$ and $\bar{t}$ are dimensionless radius of curvature and time, respectively. For the instrument under consideration, values of $\bar{r}_0 = 10$ and $\bar{t} = 1$ may be used. The outer radius of the aerosol flow R' is then given by

$$\frac{R'}{R} = 1 - 2\bar{\delta} \tag{19}$$

and the separation efficiency must be modified to

$$\eta_0' = \left(\frac{R_c}{R'}\right)^2 = \frac{\eta_0}{(1 - 2\bar{\delta})^2}. \tag{20}$$

The results of these calculations are shown in Fig. 4. The prediction is considerably improved, showing that the main cause of the discrepancy may be the deviation of the particle trajectories from the streamlines in the curved section of the jet (4).

In case of clean air flow, it can be shown that also a ratio R_a'/R_a for the annual aerosol flow is given by equation (19), when the following substitutions are made for ψ, $\bar{t}$ and $\bar{r}_0$ in equation (18):

$$\psi_a = \psi\frac{D}{D_a}, \quad \bar{t}_a = \bar{t}\frac{D}{D_a},$$

$$\bar{r}_{0a} = \frac{r_{0a}}{D_a} = \left(r_0\frac{D}{D_a}\right)\frac{1}{D_a} = \bar{r}_0\left(\frac{D}{D_a}\right)^2. \tag{21}$$

Therefore, a general relationship

$$\frac{R_a'}{R_a} = \frac{R_b'}{R_b} = \frac{R'}{R} = 1 - 2\bar{\delta} \tag{22}$$

can be obtained and it is easy to show that equation (6) is also valid when η_0 is replaced by η_0'.

Although a uniform distribution of the inlet velocity is a reasonable assumption in view of the high acceleration, the effect of the distribution may also be estimated by assuming a velocity distribution:

$$\frac{u}{u_0} = \frac{32}{30}\left\{1 - \left(\frac{r}{R}\right)^{30}\right\}. \tag{23}$$

The small frame in Fig. 4 gives the modified velocity distribution. The separation efficiency can be obtained by use of equation (8), (23) and the same critical radius R_c as in the potential flow calculations. The prediction is qualitatively improved as shown in Fig. 4, indicating that the actual velocity distribution may be another cause contributing to the discrepancy between the data and the unmodified theory.

In spite of the theoretical bias, almost all the data are represented by a single experimental curve for η_0. Therefore, it is possible to interpret the separation characteristics of the new impactor with clean air flows based on the experimental curve for η_0. Figure 5 shows how the separation characteristics change experimentally with the flow rate ratio α. The curves in the figure are obtained by use of equation (6) and the experimental curve in Fig. 4. The prediction is satisfactory and the quality of the separation, i.e. the slope of the curves, is adjusted by the

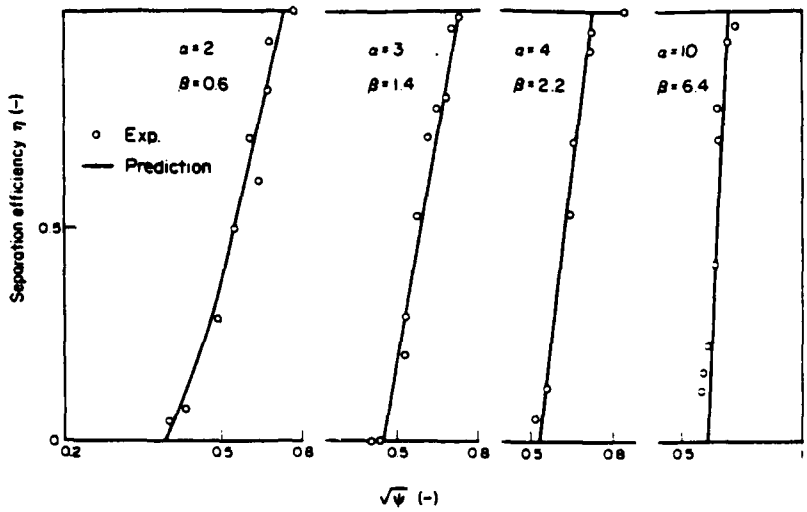

Fig. 5. Separation efficiencies of the new virtual impactor as a function of clean air flow rate ratio α.

flow rate ratio α. With increasing flow rate ratio α, the slope of the separation characteristic becomes steeper, an effect predicted by equation (6). When $\alpha = 2$, the quality of separation is almost the same or better than in case of a conventional solid-plate impactor. Therefore, $\alpha = 2$ may be sufficient and suitable for actual industrial applications of the impactor as a powder separator. Besides this fact, the new impactor can be used continuously to get large volumes of size-separated airborne products.

Figure 6 shows the results obtained for several values of β at $\alpha = 5$. Agreement between data and the predicted curves is satisfactory for $\beta = 3$ and 3.5. In the other cases, at least the cut-off size, as defined by the separation efficiency $\eta = 0.5$ coincides with the prediction, showing that the cut-off size is adjustable by selecting a proper flow rate ratio β. However, the experimental data deviate from the prediction when the flow rate ratio β is small. To elucidate the cause of these deviations, a cover glass was placed on top of the lower nozzle at a distance of 1 mm from the jet so that particles were collected by impaction. Subsequently, the shape of the particle deposits on the glass was inspected under a microscope. The results are presented in Fig. 7. The shapes for $\beta = 3$ and 3.5 are not shown because they were almost perfect circles. The shape for $\beta = 2.5$ is still reasonably circular, but the shapes for $\beta = 2$ and 1.5 are considerably distorted. With these data and the experimental curve in Fig. 4, the

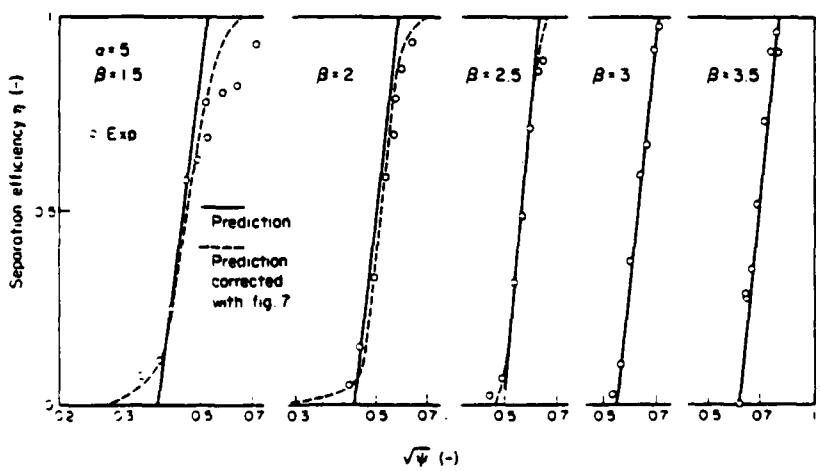

Fig. 6. Effect of flow ratio β on separation characteristics.

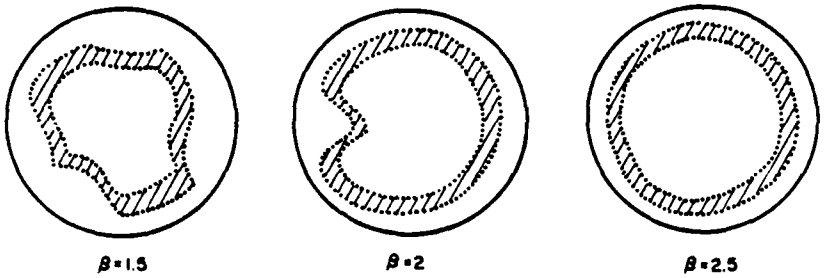

Fig. 7. Distortion of annular aerosol flow by different flow ratios β ($\alpha = 5$).

separation efficiencies were calculated by numerical integration assuming that the critical radius R_c equals $R\sqrt{\eta_0}$ (see equation (9)). The dotted lines in Fig. 6 give the results. The large deviations in the high inertia range for $\beta = 1.5$ are not explained, but the other data are almost on the new lines. It may be concluded, therefore, that the main cause of these deviations is a distortion of the annular flow of the aerosol.

The range of applicability of the new impactor depends on the flow rate ratio Q_2/Q_t, where Q_2 is the enveloping sheath flow of clean air. If this flow rate ratio is selected to satisfy the condition

$$Q_2/Q_t \leq 0.2, \tag{24}$$

then good agreement between data and prediction is expected up to total flow rates of 30 l./min, because the deposit patterns were almost circles. If the flow rate ratio α exceeds the value of 1.43, then equation (24) requires a minimum flow rate ratio β. This can be shown from the balance of flows:

$$Q_1 + Q_2 + Q_p = Q_t \tag{25}$$

or

$$\frac{Q_1}{Q_t} + \frac{Q_2}{Q_t} + \frac{1}{\alpha} = 1. \tag{26}$$

With equation (24) and

$$\frac{Q_1}{Q_t} = \frac{\beta}{\alpha} \tag{27}$$

the inequality

$$\frac{\beta}{\alpha} + 0.2 + \frac{1}{\alpha} \geq 1 \tag{28}$$

is established which leads to

$$\beta \geq 0.8\alpha - 1. \tag{29}$$

This is a valid restriction only if $\alpha \geq 1.43$. For $\alpha < 1.43$, minimum flow rate ratio β is determined by equation (14).

It may be noted that any restriction of the operation condition can be overcome because the cut-off size is adjustable by changing the jet diameter and/or the total flow rate. Therefore, there are no essential difficulties for actual applications.

Figure 8 shows the results obtained by using two units of impactors in series. In this arrangement, the aerosols are divided into three fractions. The experimental conditions were $\alpha = 10, \beta = 7$ for the first and $\alpha = 10, \beta = 8$ for the second impactor, while the total flow rate for each impactor was maintained at 10 l./min*. The jet diameters were determined by

* The actual flow rate was slightly different in each experiment and was corrected by pressure data.

microscope as 2.0 mm for the first and 2.1 mm for the second impactor. Cunningham's slip correction factor was about 1.08 for particle diameters of 2–3 μm. Then the separation characteristic of the first impactor is almost linear between 2.0 μm ($\eta = 0$) and 2.3 μm ($\eta = 1$) in terms of the aerodynamic diameter. Also the second impactor has linear characteristic between 2.4 and 2.8 μm*.

Figure 8a presents pictures of the three fractions of paraffin particles as separated by the impactors in series. The differences between the deposits shown in the photomicrographs are distinguishable. The finest fraction contains very small particles and the coarse fraction has very large particles. The intermediate fraction, however, has no particles of extreme size.

Figure 8b and c are photomicrographs of coal dust and slate powder, respectively. The separations are sufficient in these experiments, but there are a few particles that are smaller than expected. When the experiments were carried out with less well-dispersed suspensions in the atomizer, the number of the unexpectedly small particles increased, showing that the aggregates leaving the atomizer were dispersed in the jet due to impaction or high speed shear flow. Therefore, the particles in the atomizer suspension must be fully dispersed if they are to yield a good test aerosol.

Figure 8d shows the separated asbestos. The three photomicrographs are quite different in character. The finest fraction has very thin fibers and small isometric particles, and the separation depends more on the diameter than on the length of fibers. This fact agrees with previous results indicating that the aerodynamic diameter of fibers is only slightly influenced by the length but predominantly proportional to the diameter (Stöber *et al.*, 1970).

In view of these experimental results, it may be concluded that the continuous separation of particles and the generation of test aerosols of narrow size distribution in the micrometer range is facilitated by use of the new and improved virtual impactors. No difficulties are anticipated in the application of the method to larger size particles as long as the gravity has a negligible effect.

A final note concerns the possibility of employing this impactor as a sampler for respirable dust. The slope of the separation characteristic in case of $Q_3/Q_t = 0.1$ is steeper than the ACGIH-sampling curve (Aerosol Technical Committee, 1970). It may be possible, however, to reduce the slope by using larger values of Q_3/Q_t or larger gaps between the jet and lower nozzle than those employed in this experiment. Apparently three points along a separation curve can be chosen in order to fit it to a standard sampling curve of respirable dust. The first fitting point would be at $\eta = 0.5$ by selecting $\sqrt{\psi}$, the second point at, for example, $\eta = 0.75$ and the third point at $\eta = 0.25$ could be fitted by adjusting α and β in equation (6). This possibility will be studied in future work.

6. CONCLUSIONS

The present study has confirmed both theoretically and experimentally that a precise separation of fine particles is attainable by use of a virtual impactor improved by employing clean air flows confining the aerosol to an annular flow. The quality of the separation, which is adjustable by changing the clean air flow rate ratios, has been successfully predicted on a semi-empirical base. An increase in the ratio of clean air flow rate to aerosol flow rate improves the separation quality. The cut-off size is also adjustable within a certain range of particle inertia. However, the separation falls below the prediction, if the ratio of outer clean air flow rate to total flow rate exceeds 0.2. The reason for this behavior could be explained by apparent distortions of the annular aerosol flow.

A set of two improved virtual impactors was successfully applied in an attempt to prepare test aerosols of narrow size distribution from actual coal dust and slate powder. There were no difficulties as long as the feed dust was fully dispersed.

Acknowledgement – The authors express their appreciation to Drs K. Spurny and G. Zebel (Silikose-Forschungsinstitut der Bergbau-Berufsgenossenschaft) for their kind interest and valuable discussions. One of the

* These characteristics were slightly different in each experiment because of different atmospheric pressure.

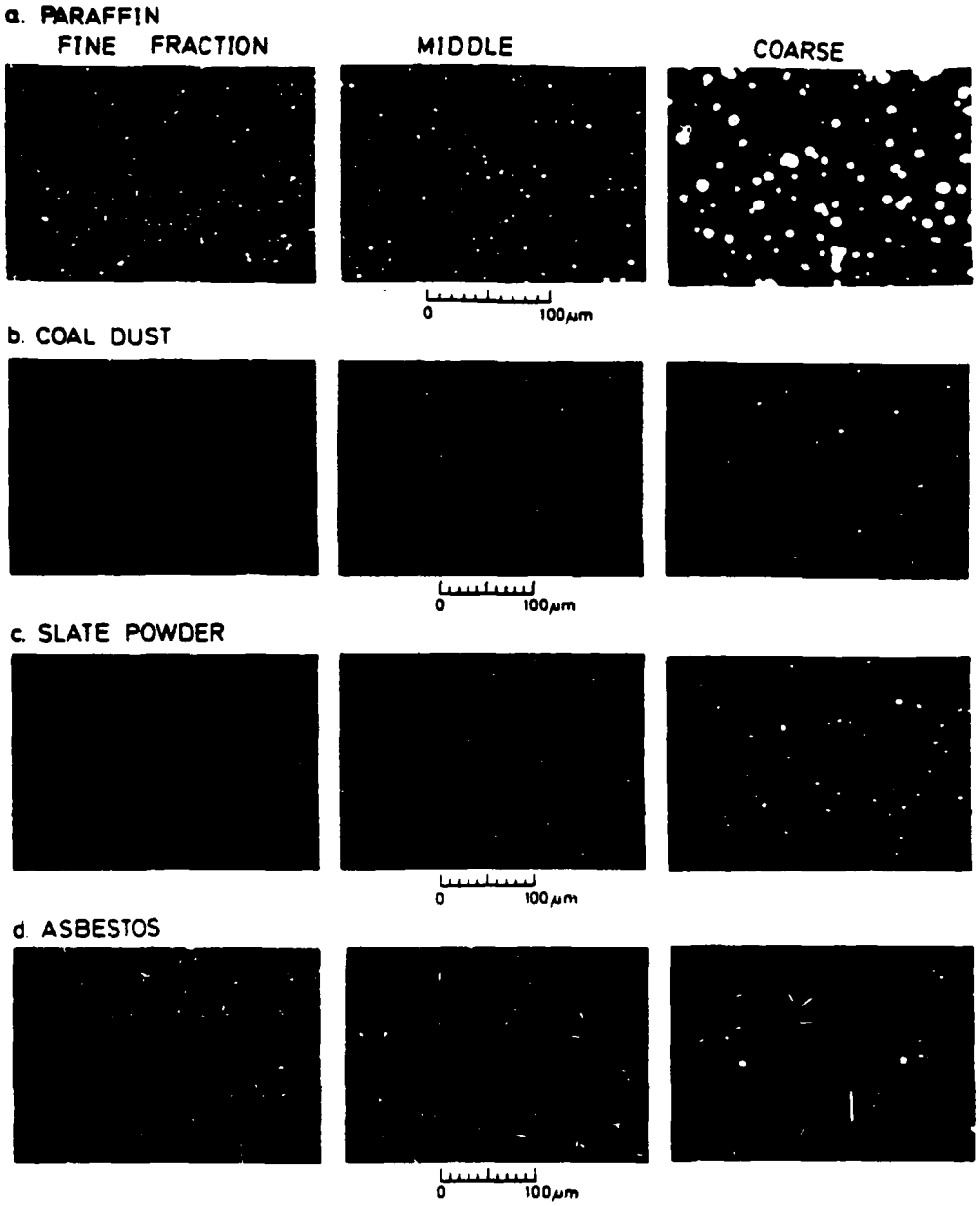

Fig. 8. Separation of particles by use of two improved impactors in series ($Q_{t1} = Q_{t2} = 10$ l./min, $\alpha_1 = \alpha_2 = 10$, $\beta_1 = 7$, $\beta_2 = 8$).

authors (H.M.) gratefully acknowledges the support of the Alexander-von-Humboldt-Stiftung by a stipend facilitating this work. He also thanks Prof. K. Iinoya (Kyoto Univ.), Drs H. Oldiges, D. Seehars, W. Holländer and other members of the Institut für Aerobiologie for their helpful suggestions and encouragement. The impactors were built with great skill and diligence by the workshop of the institute.

REFERENCES

Aerosol Technol. Committee, AIHA (1970) *Am. ind. Hyg. Ass. J.* **31**, 133.
Conner, W. D. (1966) *J. Air Pollut. Control Ass.* **16**, 35.
Dzubay, T. G. and Stevens, R. K. (1975) *Envir. Sci. Techn.* **9**, 663.
Fuchs, N. A. (1964) *The Mechanics of Aerosols*, Pergamon Press, Oxford.
Loo, B. W., Jaklevic, J. M. and Goulding, F. S. (1976) *Fine Particles* (Edited by Liu, B. Y. H.) Academic Press, p. 312.
Masuda, H., Iinoya, K., Hirota, M. and Kurahashi, H. (1976) *Chem. Engng. Tokyo* **2**, 286.
Masuda, H., Fushiro, S and Iinoya, K. (1977) *J. Res. Ass. Powder Technol.* **14**, 3.
McFarland, A. R., Ortig, C. A. and Bertch, R. W. Jr. (1978) *Envir. Sci. Techn.* **12**, 679.
Spurny, K., Boose, Chr. and Hochrainer, D. (1975) *Staub* **35**, 440–445.
Stöber, W., Flachsbart, H. and Hochrainer, D. (1970) *Staub* **30**, 277.
Yoshida, H., Fujii, K., Yomimoto, Y., Masuda, H. and Iinoya, K. (1978) *Chem. Engng, Tokyo* **4**, 419.
Zebel, G. and Hochrainer, D. (1972) *Staub* **32**, 6.

Gelman

Acroflow® II Cartridges

Designed for your final filtration applications

FEATURES AND BENEFITS

- does not contain glass or asbestos fibers
- high filtration capacity
- rapid resistivity recovery

Acroflow® II is a membrane pleated cartridge composed of a nylon reinforced acrylic copolymer. *As an added advantage, the 0.2 and 0.45 µm sizes feature serial filtration.* The filter media serves as a surface filter for particles larger than pore size and as a depth filter for smaller particles. Acroflow cartridges offer a wide chemical compatibility range and are available in 10", 20", and 30" lengths.

APPLICATIONS

Pharmaceuticals: Biologicals • Clarification • Compressed air • Packaging container wash and rinse • Rinse water for lines • Rinse water for mixing tanks

Electronics Manufacturing: Deionized water • Laser coolant water • Non-toxic gas filtration

Cosmetics: Deionized water for bacterial control • Shampoo clarification • Solids removal from viscous cosmetics

Food and Beverage: Wine • Compressed air • Water for soft drinks • Alcohols

Biochemicals and Reagents: Reagent filtration • Cell counter diluents • Hemodialysis concentrates • Makeup water

OPERATING CHARACTERISTICS

Resistivity Recovery: No. 12570 reaches 18 megohms after 90 gallon flush

Maximum Operating Temperature: 88°C (190°F) in liquids or gases

Maximum Differential Pressure: 5.6 kg/cm² (80 psi)

Maximum Back Pressure: 4.2 kg/cm² (60 psi)

Water Flow Rate: See Chart

Air Flow Rate: See Chart

Cartridge materials have been evaluated for biosafety in accordance with USP Class VI Plastic Tests to ensure safety of materials. Each cartridge is hot stamped with Gelman's manufacturing lot number for easy traceability.

SPECIFICATIONS

Materials of Construction

End Caps: Phenylene Oxide
Outer Support Tube: Polypropylene
Upstream Filter Support: Polyester
Downstream Filter Support: Polypropylene
Core: Acetal Copolymer
Sealing Material: Polyurethane
O-Rings: Ethylene Propylene Copolymer
Gaskets: Buna-N
Filter Media: Acrylic Copolymer

Typical Effective Filtration Area: 24.9 cm (9.8 in.)—0.37 m² (4.0 ft²), 49.8 cm (19.6 in.)—0.74 m² (8.0 ft²), 74.7 cm (29.4 in.)—1.11 m² (12.0 ft²)

Dimensions: Length—See Ordering Information
Diameter—6.6 cm (2.6 in.)

Sterilization

Hot Water Sanitization: 15 minutes at 82°C (180°F)
ETO: 40% R.H., 12% ETO in Freon, 66°C (150°F)

INSTALLATION

To assure optimum cartridge performance:

1. Eliminate back-pressure (water hammer).
2. *Replace O-rings or gaskets.*
3. Limit differential pressure to 80 psi (5.6 kg/cm²).
4. Consult this insert for chemical compatibility and for maximum operating temperature.
5. Avoid overtightening compression seal on double open-end cartridges.

Typical Performance Data

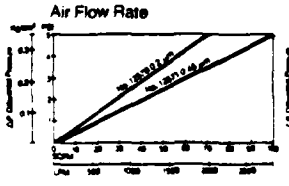

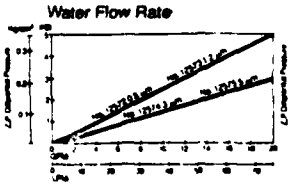

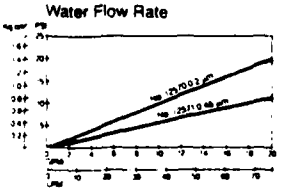

CHEMICAL COMPATIBILITY

Conducting Your Own Compatibility Tests

If you can't find the answer to your compatibility question in the chart below, a simple but effective compatibility check can be made by soaking a cartridge in your test solution for 48 hours at the use temperature. Then examine the cartridge and solution for signs of visual change.

Indications of Chemical Attack:

Discoloration	Surface Tackiness
Dimensional Change	Change of Color in Test Solution
Loss of Strength	

The information contained in the chart is current data but is *intended only as a guide*. Conditions vary with each application, and users should carefully verify chemical compatibility.

KEY

R = RESISTANT. No significant change was observed in flow rate or bubble point of the membrane following 48 hours exposure to the test fluid at 25°C.

LR = LIMITED RESISTANCE. Moderate changes in physical properties or dimensions of the membrane were observed. The filter may be suitable for short term, non-critical use.

NR = NOT RESISTANT. The membrane is basically unstable. In most cases, extensive shrinkage or swelling occurs. The filter may gradually weaken or partially dissolve after extended exposure.

— = Insufficient Data.

ACIDS	
Acetic Acid, Glacial	NR
Acetic Acid, 90%	NR
Acetic Acid, 30%	NR
Acetic Acid, 10%	R
Hydrochloric Acid, Conc.	NR
Hydrochloric Acid, 6N	NR
Nitric Acid, Conc.	NR
Nitric Acid, 6N	NR
Sulfuric Acid, Conc.	NR
Sulfuric Acid, 6N	NR
Phosphoric Acid, Conc.	NR
Chromic Acid, Conc.	NR
Hydrofluoric Acid, 6N	NR
ALCOHOLS	
Amyl Alcohol	R
Benzyl Alcohol, 100%	NR
Benzyl Alcohol, 3%	R
Butanol	R
Ethanol	R
Isopropanol	R
Methanol	R
BASES	
Ammonium Hydroxide, 3N	NR
Ammonium Hydroxide, 6N	NR
Potassium Hydroxide, 3N	NR
Sodium Hydroxide, 3N	NR
Sodium Hydroxide, 6N	NR
ESTERS	
Amyl Acetate	NR
Butyl Acetate	NR
Cellosolve Acetate	NR
Ethyl Acetate	NR
Isopropyl Acetate	NR
Methyl Acetate	NR
Diethyl Ether	—
Diisopropyl Ether	—
Dioxane	—
Tetrahydrofuran	NR
GLYCOLS	
Ethylene Glycol	R
Glycerine	R
Propylene Glycol	R
AROMATIC HYDROCARBONS	
Benzene	NR
Toluene	NR
Xylene	NR
HALOGENATED HYDROCARBONS	
Carbon Tetrachloride	NR
Chloroform	NR
Chlorothene NU	NR
Dowclene WR	NR
Freon TF	NR
Freon TMC	NR
Genosolv D	LR
Methylene Chloride	NR
Perchlorethylene	NR
Trichlorethylene	NR
KETONES	
Acetone	NR
Cyclohexanone	NR
Methyl Ethyl Ketone	NR
Methyl Isobutyl Ketone	NR
OILS	
Cottonseed Oil	R
Lubrication Oil MIL-L-7808	—
Peanut Oil	R
Sesame Oil	R
White Petrolatum	R
PHOTORESISTS	
Shipley: AZ-111, AZ-119, AZ-340, AZ-1350	NR
Waycoat: LSI-195, LSI-295, LSI-395	NR
Kodak: KTFR, KMER, Microresist 752, Microresist 747	NR
MISCELLANEOUS	
Aniline	NR
Dimethyl Formamide	NR
Dimethyl Sulfoxide	NR
Formaldehyde, 37%	R
Formaldehyde, 4%	R
Gasoline	NR
Hexane, Dry	—
JP-4	R
Kerosene	R
Phenol, Liquefied	NR
Pyridine	NR
Skydrol 500	—
Turpentine	—
Water	R
Acetonitrile	—
Nickel Sulfate Solu.	—

ORDERING INFORMATION

Product No.	Pore Size 0.2 µm	0.45 µm	0.8 µm	1.2 µm	3 µm	5 µm	SOE	DOE	O-Ring Gasket EP	BU	Length 24.9 cm (9.8 in.)	49.8 cm (19.6 in.)	74.7 cm (29.4 in.)
12570	x						x		x		x		
12571		x					x		x		x		
12572			x				x		x		x		
12573				x			x		x		x		
12574					x		x		x		x		
12575						x	x		x		x		
12579	x						x		x				x
12580	x							x		x	x		
12581		x						x		x	x		
12582			x					x		x	x		
12583				x				x		x	x		
12584					x			x		x	x		
12585						x		x		x	x		
12670	x						x		x			x	
12671		x					x		x			x	
12692	x							x		x			x

KEY
SOE = Single Open-End EP = Ethylene Propylene
DOE = Double Open-End BU = Buna-N

WARNING:
Do not use or apply the product for purposes or under conditions other than those specifically described in this brochure. Failure to comply with this warning may result in improper functioning of the product, personal injury, or damage to the product or property.

For applications not listed in this brochure, contact Gelman Sciences.

RELATED PRODUCTS

Cartridge Filter Application	Range of Ratings	Cartridge Filter Characteristics	Product Name
ACIDS, SOLVENTS, CHEMICALS	0.6 µm–40 µm	All Polypropylene, Extended Service Life	Polyversol
	1 µm–5 µm	Polypropylene And/Or Glass Fiber	Preflow SR
	0.2 µm–1 µm	Teflon And Polypropylene	Sol-Vent
BEVERAGES	0.8 µm	High Capacity, Three Stage Filtration	Acroflow B
DEIONIZED WATER	0.2 µm–0.45 µm	High Purity, All Plastic, Preflushed	Acroflow Super E
PHARMACEUTICALS	Sub-µm–1 µm	Large Capacity Glass Fiber Prefilters	Preflow
	0.45 µm–0.8 µm	Serial Filtration, Acrylic Membrane	Versaflow
	Sub-µm–10 µm	Non-Fiber-Releasing Prefilter	Preflow NFR
	0.2 µm–0.65 µm	Polysulfone Membrane, Sterilizable	Acroflow 121
TANK VENTING	0.2 µm–1 µm	Teflon And Polypropylene	Sol-Vent

Gelman Sciences
600 South Wagner Road ■ Ann Arbor, MI 48106
313-665-0651 ■ TWX 810-223-6037 ■ 800-521-1520

P.N. 82348

1407K

1407K

PUMP OIL — High Vacuum, Sargent-Welch DuoSeal®.
Fractionated especially for use in Sargent-Welch vacuum pumps. Du-S pump oil is the only oil recommended for DuoSeal, DirecTorr, and Se pumps, and the vacuum guarantee for these pumps applies only when this oil is used. Use of any other oil causes inferior performance and, in time, may *even cause permanent pump damage. DuoSeal oil is checked frequently* and carefully against rigid standards for proper vapor pressure, chemical stability, viscosity, and other essential characteristics.

Cat. No.	*Size*	*Price/Each*	*Price/Case of*	
1407K-11	1 quart	6.70	56.60	12
1407K-15	1 gallon	17.30	63.50	4
1407K-20	5 gallon	69.30	—	—
1407K-25	55 gallon (drum)	571.70	—	—

Sediment

cellulose fiber water filter cartridges

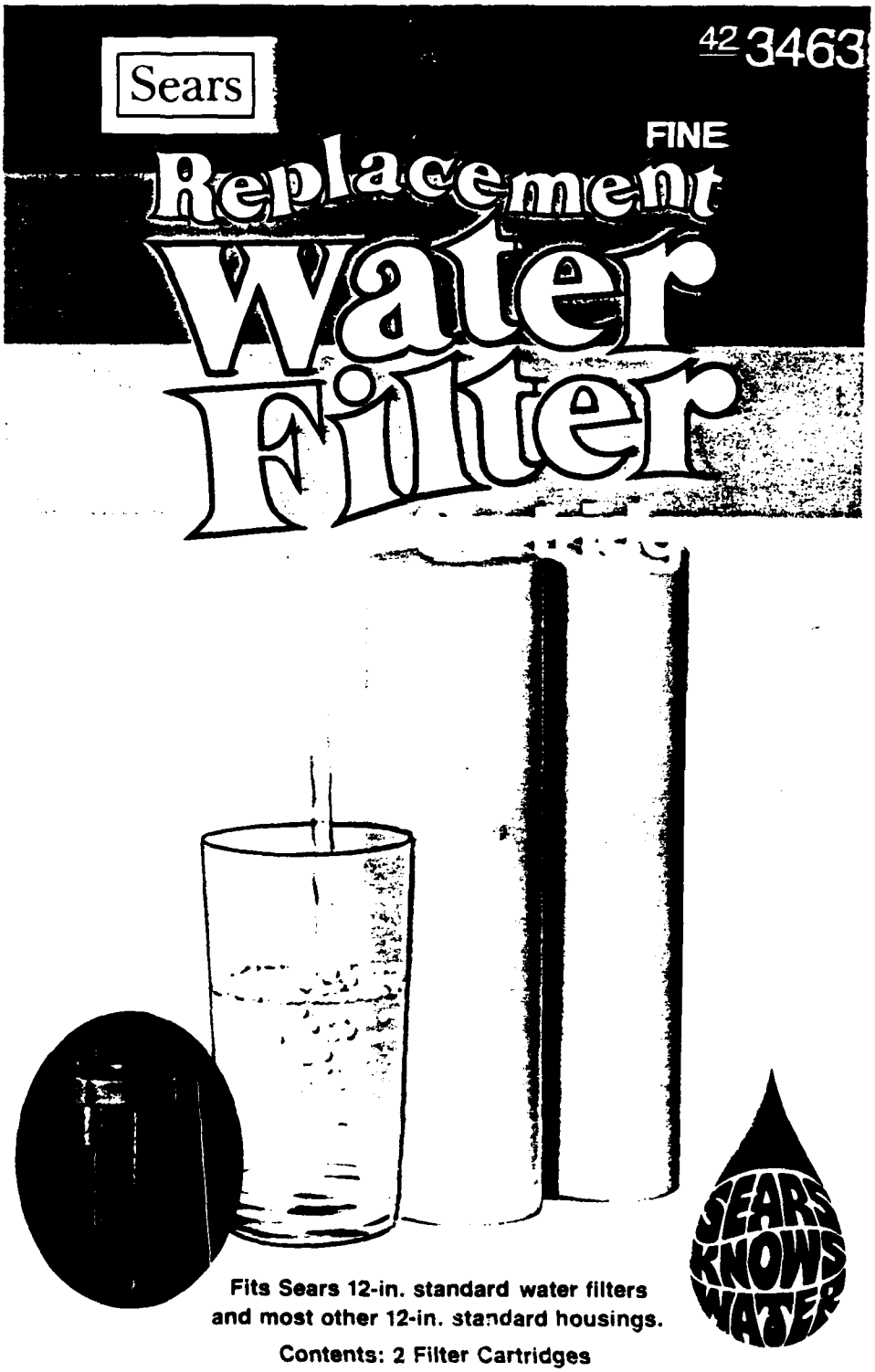

Fits Sears 12-in. standard water filters and most other 12-in. standard housings.

Contents: 2 Filter Cartridges

Sediment

cellulose fiber water filter cartridge

Sears

FINE

Replacement Water Filter Cartridges

REPLACING THE WATER FILTER CARTRIDGE

1. Close BOTH shut-off valves.

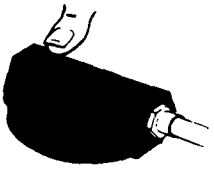

2. Press the Pressure Relief Button on the top of the housing to release pressure. Hold until pressure has been relieved.

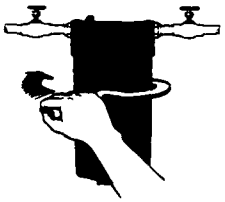

3. Turn housing clockwise with easy-change wrench (included with water filter housing) to loosen. Remove wrench when loose. Hand turn housing to remove, using care not to spill the water contained in the housing.

Lift out and discard dirty cartridge. Drain and thoroughly rinse filter housing. Insert new cartridge and reassemble by reversing the above procedure.

IMPORTANT: Be sure "O" ring is in proper position before turning housing into threads.

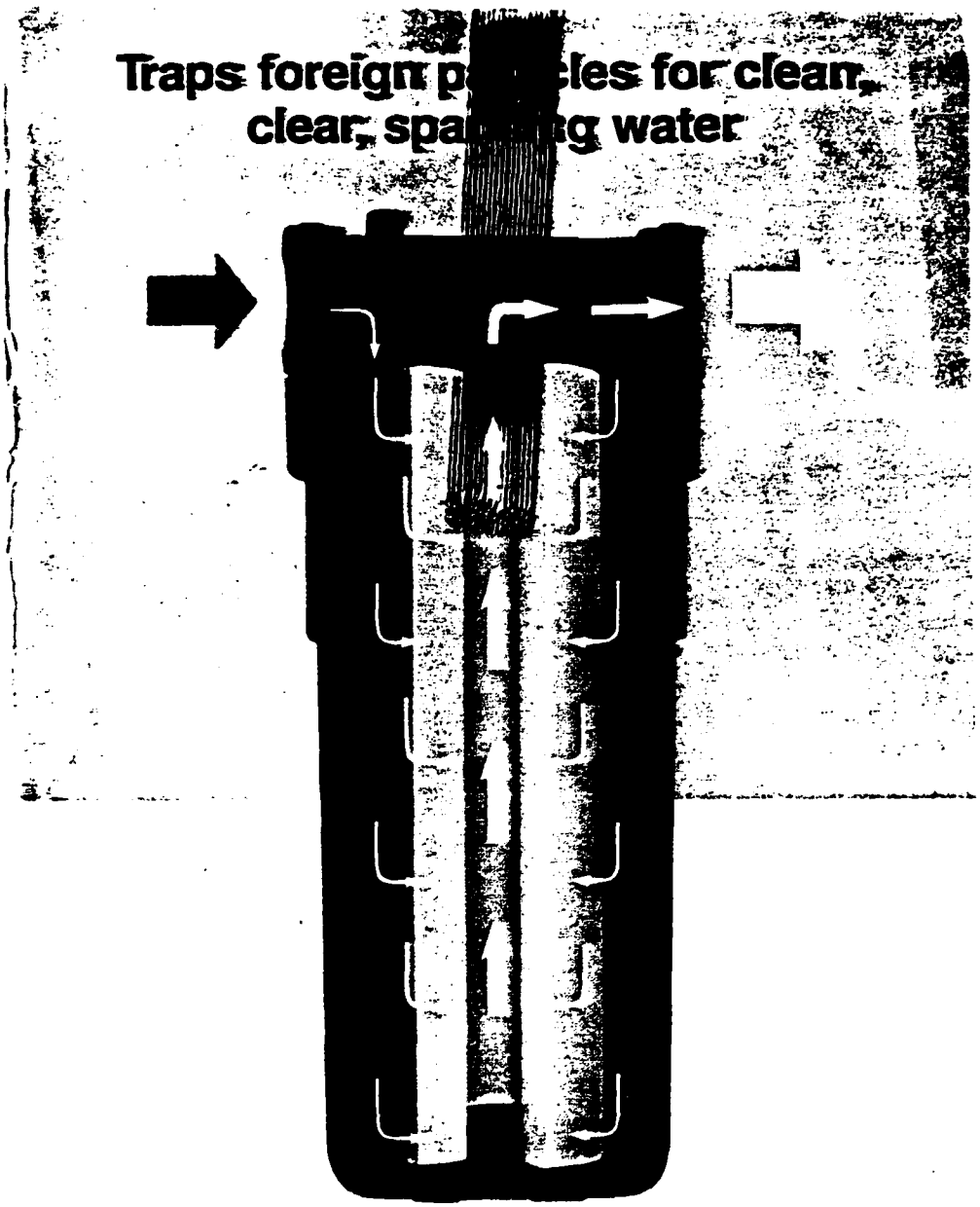

NOTE: These water filter cartridges are designed to filter only sediment and not to kill bacteria.

FILTER LIFE: Generally, the sec lter cartridge life varies from 6 weeks to 6 months, depending u amount of contaminants in the raw drinkable water supply. When the cartridge has trapped all the particles it can hold, a substantial drop in water pressure at the faucets will be noticed. When this occurs, a fresh water filter cartridge should be installed. Always keep severa r cartridges on hand.

Sold by SEARS, ROEBUCI O., Chicago, IL 60684

THE SG-40 SMOKE GENERATOR

INSTRUCTION MANUAL

Need Help? We're Here.
CALL
914 255-5000
WATS 800 431-8232
TELEX 926-474
THE VIRTIS COMPANY, INC.
Route 208 Gardiner, New York 12525

The VirTis Co. Inc., PPI Div., Gardiner, N. Y. 12525 5.81

With the growth of clean room technology the detection, measurement and control of airborne particulates has become increasingly important. The SG-40 Aerosol Generator meets this challenge, enabling you to determine penetration rates and locate leaks in air filtration systems. Simple and easy to use, it requires only a safe test material such as DOP (Dioctylphthalate) and clean air to operate.

The SG-40 Aerosol Generator design is based on a Laskin-type nozzle apparatus. By shearing the liquid plasticizer with air it creates a liquid aerosol of consistent particle size and distribution. When used with the Phoenix JM Series Photometers, this aerosol generator will quickly and efficiently test and evaluate air filtration systems in HEPA filters, work stations, clean rooms and filter banks.

The JM and SG series test equipment is applicable in a wide variety of contamination controlled environments - manufacturing to aerospace, bioscience, pharmaceuticals and medicine, even computing and food processing. This equipment is recommended for filter testing in compliance with Federal Standard No. 209B, for clean room and work station requirements in controlled environments.

SPECIFICATIONS

Undiluted Smoke Output:	Variable by selection of from one to six nozzles
Test Smoke Material:	Dioctylphthalate (DOP) is standard; however, any safe liquid may be used.
Particle Size Distribution: (using DOP)	99% + less than 3.0 microns 95% + less than 1.5 microns 92% + less than 1.0 microns 50% + less than 0.72 micron 25% + less than 0.50 micron 11% + less than 0.35 micron
Operating Temperature:	Ambient
Dimensions:	15"H x 9-1/2"W x 9-1/2"D
Capacity:	Up to 4200 CFM systems
Air Requirements:	2 to 12 SCFM at 20 psi
Construction:	Stainless Steel chamber and nozzle, aluminum head plate.
Weight:	15 pounds

OPERATION

CAUTION: Do not operate unit with smoke outlet capped! Note also that air pressures greater than 25 psi can cause liquid carry-over from the smoke outlet.

1. Remove smoke outlet cap located on the top of the Generator
2. Unscrew fill cap at the top rear of the unit, and fill with test grade Dioctylphthalate (DOP) or any safe liquid until Liquid Level Indicator reads "Full". Upper mark indicates 'full', lower mark, 'add'.
3. Connect clean compressed air to the fitting located on the head plate. Air pressure should not exceed 25 psi.
4. Open desired combination of valves for proper aerosol challenge.

For shipping the unit, cap the smoke outlet and close all six regulating valves, thus preventing DOP leakage.

Note: please include model and serial numbers in all correspondence concerning your unit, by mail or phone.

END
FILMED

5-86

DTIC