USAAVSCOM TR-85-D-4

(12)

AD-A162 097

ADVANCED TECHNOLOGY HELICOPTER LANDING GEAR PRELIMINARY DESIGN INVESTIGATION

D. Lowry

SIKORSKY AIRCRAFT DIVISION
United Technologies Corporation
Stratford, Conn. 06601

October 1985

DTIC
ELECTE
DEC 0 5 1985
S D
D

Final Report for Period 1983 - 1984

DTIC FILE COPY

Approved for public release;
distribution unlimited.

Prepared for

AVIATION APPLIED TECHNOLOGY DIRECTORATE
US ARMY AVIATION RESEARCH AND TECHNOLOGY ACTIVITY (AVSCOM)
Fort Eustis, VA. 23604-5577

AVSCOM — PROVIDING LEADERS THE DECISIVE EDGE

85 12 2 165

AVIATION APPLIED TECHNOLOGY DIRECTORATE POSITION STATEMENT

This preliminary design effort is one of two parallel contractual investigations to develop landing gear structural configurations and determine the associated weight changes for increased crashworthy capabilities. The contractor developed three baseline landing gears; a retractable gear designed to normal loading requirements, and two crashworthy configurations, fixed and retractable, designed to meet MIL-STD-1290 crashworthy requirements. Weight sensitivity analyses were conducted for the crashworthy designs to determine the energy absorbing component weights for various sink speeds and aircraft attitudes. These results are used with other landing gear design parameters to establish recommended crashworthy design requirements.

The results of this program represent a significant advance in the understanding of the parameters which influence crashworthy landing gear and energy absorbing structure weight. These findings will be integrated with the parallel contract and past efforts in landing gear weight sensitivity to develop less costly, more efficient crashworthy systems.

Mr. Geoffrey R. Downer of the Aeronautical Technology Division, Structures Technical Area, served as project engineer and Mr. Drew G. Orlino of the Aeronautical Systems Division, Safety and Survivability Technical Area, assisted in this effort.

DISCLAIMERS

The findings in this report are not to be construed as an official Department of the Army position unless so designated by other authorized documents.

When Government drawings, specifications, or other data are used for any purpose other than in connection with a definitely related Government procurement operation, the United States Government thereby incurs no responsibility nor any obligation whatsoever; and the fact that the Government may have formulated, furnished, or in any way supplied the said drawings, specifications, or other data is not to be regarded by implication or otherwise as in any manner licensing the holder or any other person or corporation, or conveying any rights or permission, to manufacture, use, or sell any patented invention that may in any way be related thereto.

Trade names cited in this report do not constitute an official endorsement or approval of the use of such commercial hardware or software.

DISPOSITION INSTRUCTIONS

Destroy this report by any method which precludes reconstruction of the document. Do not return it to the originator.

Unclassified
SECURITY CLASSIFICATION OF THIS PAGE

REPORT DOCUMENTATION PAGE

1a REPORT SECURITY CLASSIFICATION Unclassified	1b. RESTRICTIVE MARKINGS
2a SECURITY CLASSIFICATION AUTHORITY	3 DISTRIBUTION/AVAILABILITY OF REPORT Approved for public release; distribution unlimited.
2b. DECLASSIFICATION/DOWNGRADING SCHEDULE	
4 PERFORMING ORGANIZATION REPORT NUMBER(S) SER 510148	5. MONITORING ORGANIZATION REPORT NUMBER(S) USAAVSCOM TR 85-D-4
6a. NAME OF PERFORMING ORGANIZATION Sikorsky Aircraft Division 6b OFFICE SYMBOL (If applicable)	7a. NAME OF MONITORING ORGANIZATION Aviation Applied Technology Directorate
6c. ADDRESS (City, State, and ZIP Code) United Technologies Corporation Stratford, Connecticut 06601	7b ADDRESS (City, State, and ZIP Code) U.S. Army Aviation Research and Technology Activity (AVSCOM) Fort Eustis, Virginia 23604-5577
8a NAME OF FUNDING/SPONSORING ORGANIZATION 8b. OFFICE SYMBOL (if applicable)	9. PROCUREMENT INSTRUMENT IDENTIFICATION NUMBER DAAK51-83-C-0040
8c. ADDRESS (City, State, and ZIP Code)	10 SOURCE OF FUNDING NUMBERS PROGRAM ELEMENT NO. 62209A; PROJECT NO. 1L162-209AH76; TASK NO. 04; WORK UNIT ACCESSION NO. 033

11 TITLE (Include Security Classification)
Advanced Technology Helicopter Landing Gear Preliminary Design Investigation

12 PERSONAL AUTHOR(S)
D. Lowry

13a. TYPE OF REPORT	13b TIME COVERED	14 DATE OF REPORT (Year, Month, Day)	15. PAGE COUNT
Final	FROM 1983 TO 1984	October 1985	122

16 SUPPLEMENTARY NOTATION

17 COSATI CODES		
FIELD	GROUP	SUB-GROUP

18 SUBJECT TERMS (Continue on reverse if necessary and identify by block number)
Crashworthy, Shock Strut, Drag Strut, Velocities, Landing Gear, Weight

19 ABSTRACT (Continue on reverse if necessary and identify by block number)

A preliminary design investigation has been performed to develop weight and cost sensitivities of various landing gear systems for a 10,000-pound class LHX helicopter. Weights are established for three baseline main landing gear systems: a noncrashworthy retractable, a crashworthy retractable, and a crashworthy fixed. Each system is capable of kneeling the LHX helicopter. Weights are based on preliminary structural analysis of landing gear loads developed by a computer program KRASH. KRASH was used to obtain the design loads at various sink rates, and pitch and roll attitudes. The design loads were used to size the landing gear structure in order to develop the landing gear weight for the different impact conditions.

Main landing gear system costs are developed from the weight data established.

An aerodynamic drag assessment was performed. Criteria for crashworthy designs are recommended. The recommended criteria were developed from the weight trends, costs, and UH-60A Class A Mishaps.

20 DISTRIBUTION/AVAILABILITY OF ABSTRACT ☐ UNCLASSIFIED/UNLIMITED ☐ SAME AS RPT ☐ DTIC USERS	21. ABSTRACT SECURITY CLASSIFICATION Unclassified
22a NAME OF RESPONSIBLE INDIVIDUAL G. Downer	22b TELEPHONE (Include Area Code) (804) 878-5476 22c OFFICE SYMBOL SAVDL-ATL-ATS

DD FORM 1473, 84 MAR — 83 APR edition may be used until exhausted. All other editions are obsolete

SECURITY CLASSIFICATION OF THIS PAGE
Unclassified

PREFACE

This Advanced Technology Helicopter Landing Gear Preliminary Design Investigation was conducted under contract DAAK51-83-C-0040 with the Aviation Applied Technology Directorate, U.S. Army Aviation Research and Technology Activity (AVSCOM), Fort Eustis, Virginia.

The work was performed under the general direction of Mr. G. Downer of the Aviation Applied Technology Directorate. Sikorsky Aircraft principal participants were Mr. S. Garbo, Project Manager, Mr. D. Lowry, Principal Investigator, Ms. S. Hess, Loads and Criteria, Mr. M. Pramanik, Crashworthiness, and Mr. T. Obenhoff, Landing Gear Design.

Accesion For
NTIS CRA&I ☑
DTIC TAB ☐
Unannounced ☐
Justification
By
Distribution /
Availability Codes
Dist | Avail and / or Special
A-1

TABLE OF CONTENTS

	PAGE
PREFACE	iii
LIST OF ILLUSTRATIONS	vii
LIST OF TABLES	x
INTRODUCTION	1
BASELINE HELICOPTER	2
BASELINE LANDING GEARS	5
Design Loading Requirements	5
Ground Handling	5
Obstruction, Symmetric and Asymetric Reserve Energy	6
Taxiing	6
Supplemental Design Requirements	7
Vertical Impact Design Conditions Envelope Crashworthy Gears	8
Additional Crashworthy Design Requirements	8
Pitch, Roll and Velocities	8
Noncrashworthy, Retractable Main Gear	9
Crashworthy, Retractable Main Gear	12
Crashworthy, Fixed Main Gear	15
Tail Landing Gear	19
Drag Beam - Main Gears	21
LOADS ANALYSIS	22
Design Mass Properties	22
Main Rotor Parameters	22
Landing Gear Parameters	22
Main Gear	22
Tail Gear	22
Normal Operating Conditions	27
Static Design (Landing)	27
Static Design (Ground Handling)	27
Normal Landing Requirements	27
Crashworthy Design Requirements	28
KRASH ANALYSIS	33
KRASH Program Input	33
KRASH Model Mass Properties	33
KRASH Model Spring Properties	36
Lift Forces	37

TABLE OF CONTENTS (Cont'd)

PAGE

KRASH Program Results 37
Time of Zero Vertical Velocity at Aircraft C.G. 37
Landing Gear Strut Maximum Stroke and Time of Occurrences 39
Ground Load 41
Inertial Load Factors 47
Seat Stroking 51
Fuselage Crushing 54

PRELIMINARY STRUCTURAL WEIGHT ANALYSIS 59
Structural Loads (Main Gears) 59
Tail Gear 65
Baseline Landing Gear Weight 65
Composite Landing Gear Components 68

WEIGHT SENSITIVITY ANALYSIS 72
Crashworthy Systems 72
Component Weight 82
Landing Gear System Cost 87

AERODYNAMIC DRAG 91

RECOMMENDED DESIGN CRITERIA 94
Attitudes and Velocities 94
Detail Design Criteria for the Main Landing Gear 96

DESIGN UPDATE 97
Shock Strut Structural Analysis 97
Optimized Shock Struts - Baseline and Updated Designs 100
Weight Substantiation 104
Aerodynamic Drag - Updated Design 108
Fabrication Methods and Processes 108
Reliability 108
Maintainability 108

CONCLUSIONS 109

RECOMMENDATIONS 110

REFERENCES 111

APPENDIX — Weight Sensitivity and KRASH Analysis 113

LIST OF ILLUSTRATIONS

Figure		Page
1	Baseline LHX General Arrangement	3
2	Crashworthy Design Envelope	8
3	Retractable, Kneeling, Noncrashworthy, Main Landing Gear	10
4	Shock Strut, Noncrashworthy Main Landing Gear	11
5	Retractable, Kneeling, Crashworthy Main Landing Gear	13
6	Shock Strut, Crashworthy Retractable Main Landing Gear	14
7	Fixed, Kneeling, Crashworthy Main Landing Gear	16
8	Shock Strut, Fixed, Crashworthy Main Landing Gear	17
9	Baseline Tail Gear, Retractable	20
10	Drag Beam, Main Landing Gear	21
11	Main Gear Tire Load Vs. Tire Deflection.	25
12	Tail Gear Tire Load Vs. Deflection . . .	26
13	Pitch and Roll Attitudes in Crash Impacts	32
14	KRASH Model	34
15	Final Model	35
16	Typical Load Vs. Deflection Curve . . .	36
17	Drag Load Time History (Typ.)	44
18	Side Load Time History (Typ.)	45
19	Vertical Load Time History (Typ.) . . .	46
20	Vertical Acceleration Time History on High Mass Items	49

LIST OF ILLUSTRATIONS (Cont'd)

Figure		Page
21	Longitudinal Acceleration Time History on High Mass Items	50
22	Vertical "G" Pulse On Seat	52
23	Sketch of Subfloor Structure	56
24	Fuselage Crushing	57
25	Crushing Energy - Kevlar Members	58
26	Shock Strut - Noncrashworthy, Kneeling, Retractable Main Landing Gear	61
27	Main Gear Drag Beam	62
28	Shock Strut Assembly, Crashworthy, Retractable, Kneeling, Main Landing Gear	63
29	Fixed Kneeling, Crashworthy Main Gear Strut	64
30	Tail Gear Structure	66
31	Tail Gear Drag Strut	67
32	Composite Main Gear Drag Beam Compared to Steel	69
33	Pilot Seats Vertical Load - Gears Retracted	74
34	Fuselage Crushing Results	76
35	Vertical Load Factors - High Mass Items.	78
36	Crashworthy Systems (Reference 2). . . .	79
37	Main Gear Component Loads/Drag Beam Weight	81
38	Weight of Affected Structure as a Function of Pitch and Roll Angles. . . .	85
39	Landing Gear System Weight as a Function of Pitch and Roll Angles. . . .	86

LIST OF ILLUSTRATIONS(Cont'd)

Figure No.		Page
40	Landing Gear Parametric Cost Study . . .	89
41	Landing Gear System Cost as a Function of Pitch and Roll Angle	89
42	Weight and Cost Trends for Landing Gear System	90

LIST OF TABLES

Table		Page
1	Weight Summary	4
2	Mass Properties	23
3	Aircraft Properties and Parameters	24
4	Normal Landing Gear Design Conditions and Ground Loads	29
5	Ground Handling - Gear Loads	30
6	Design Conditions for Crash Impacts	32
7	Time of Zero Vertical Velocity at Aircraft C.G.	38
8	Summary of Strut Actions	40
9	Ground Loads Data	43
10	Summary of Vertical Inertia Load Factors	48
11	Summary of Cockpit Seat Stroking	53
12	Summary of the Understructure Crushing	55
13	Ground Loads and Strut Loads - Main Gear	60
14	Landing Gear Weight Summary	70
15	Landing Gear Weight Comparison	71
16	Crew Seat/Troop Seat System Weight	73
17	Airframe Weights	75
18	Main Gear Shock Strut Weight Summary	84
19	Landing Gear Parametric Study	88
20	UH-60A Data Comparison Class A Mishaps (At Major Impact)	95
21	Shock Strut Components - Margins of Safety - Baseline Crashworthy Designs	99

LIST OF TABLES

Table		Page
22	Baseline Shock Strut Weight Reduction For Minimum Margins of Safety	103
23	Shock Strut Components, Wall Thickness	104
24	Main Gear Shock Strut Weight Summary, Adjusted Weight	105
25	Updated Landing Gear Shock Strut Weight	106
26	Updated Main Gear Shock Strut Weight Summary	107
A-1	Weight Sensitivity - Shock Struts and Fittings - Fixed Gear - (42 FPS)	114
A-2	Weight Sensitivity - Shock Struts and Fittings - Fixed Gear - (36 FPS)	115
A-3	Weight Sensitivity - Shock Struts and Fittings - Fixed Gear - (30 FPS)	116
A-4	Weight Sensitivity - Shock Struts and Fittings - Retractable Gear - (42 FPS)	117
A-5	Weight Sensitivity - Shock Struts and Fittings - Retractable Gear - (36 FPS)	118
A-6	Weight Sensitivity - Shock Struts and Fittings - Retractable Gear - (30 FPS)	119
A-7	Mass Properties and Locations	120
A-8	Node Point Locations	120
A-9	Beam Data	121
A-10	Material Properties	121
A-11	Beam End Fixity Data	122
A-12	Spring Data	123
A-13	Oleo Strut Input Data	124

INTRODUCTION

Energy absorbing landing gears play a key role in meeting helicopter crashworthiness design goals of reduced crash injuries, fatalities, and material losses. However, the ability to absorb large amounts of energy in the landing gears is not achieved without paying strict attention to the energy absorption requirements in the design effort. Furthermore, experience has shown that this capability cannot be realized without some increase in gear weight and complexity, which in turn has an adverse effect on the aircraft performance and cost. These effects will, of course, vary with the level of crash energy which must be absorbed and with the severity of the crash attitude requirements.

The Army's most recent production helicopter, the UH-60 BLACK HAWK, is designed to meet some of the requirements of MIL-STD-1290 (AV) "Light Fixed and Rotor Wing Aircraft Crashworthiness". Also, under the Advanced Composite Airframe Program, a landing gear has been designed to meet most of the crash requirements of MIL-STD-1290. However, these aircraft systems are designed using a nonretractable landing gear. It is, therefore, appropriate to conduct a preliminary design investigation of a retractable landing gear, especially in light of the Army's increased emphasis on increased forward flight performance, in order to evaluate the applicability and effect of crashworthiness design requirements.

This report documents the results of a three-phase effort of a preliminary design investigation for a retractable and nonretractable landing gear system designed to crashworthy requirements.

BASELINE HELICOPTER

Sikorsky's Advanced Blade Concept (ABC™) LHX baseline configuration developed for the Advanced Technology Helicopter Landing Gear Preliminary Design Study was derived from the utility variant air vehicle provided in Reference 1. However, the Landing Gear Study aircraft was configured more in accordance with the LHX requirements outlined in RFQ DAAK51-83-Q-0061, dated July 1, 1983.

The principal physical characteristics of the ABC LHX baseline configuration are shown in Figure 1, the Baseline LHX General Arrangement drawing. The accommodations for six troops and a crew of two determined the cabin and cockpit size, and therefore, the body length.

The takeoff gross weight of this utility helicopter, summarized in Table 1, is 10,000 pounds. The counter-rotating main rotors and the auxiliary propulsor are driven by twin advanced technology engines (ATE's). The engines are installed behind the main gearbox enclosed by easy opening cowlings to allow for access, inspection, and/or maintenance.

A shrouded pusher propeller is used to provide efficient and quiet cruise thrust. The shrouded configuration will protect ground personnel and minimize damage to the propeller while operating on, or close to, the ground.

The Sikorsky ACAP diamond-shaped cross section was selected for the baseline body shape to provide a reduced body radar return at a minimal weight penalty. In addition, the shape of the aircraft is used to control the deflection of the structure. The body shape was iterated on as the landing gear design progresses to insure that optimum airframe landing gear interface and load carrying paths are established.

The landing gears are part of a crashworthy system. A crashworthy system includes crashworthy crew and troop seats, fuel system, tub structure, and retention of high mass items. The fuel system and the high mass items (engines transmission and rotor head) are located behind the occupied area of the cabin and cockpit. Locating the fuel system and high mass items behind the occupied areas reduces the possibility of penetration of the systems into the occupied areas during a crash. The structure supporting the fuel system and high mass items becomes the major airframe structure.

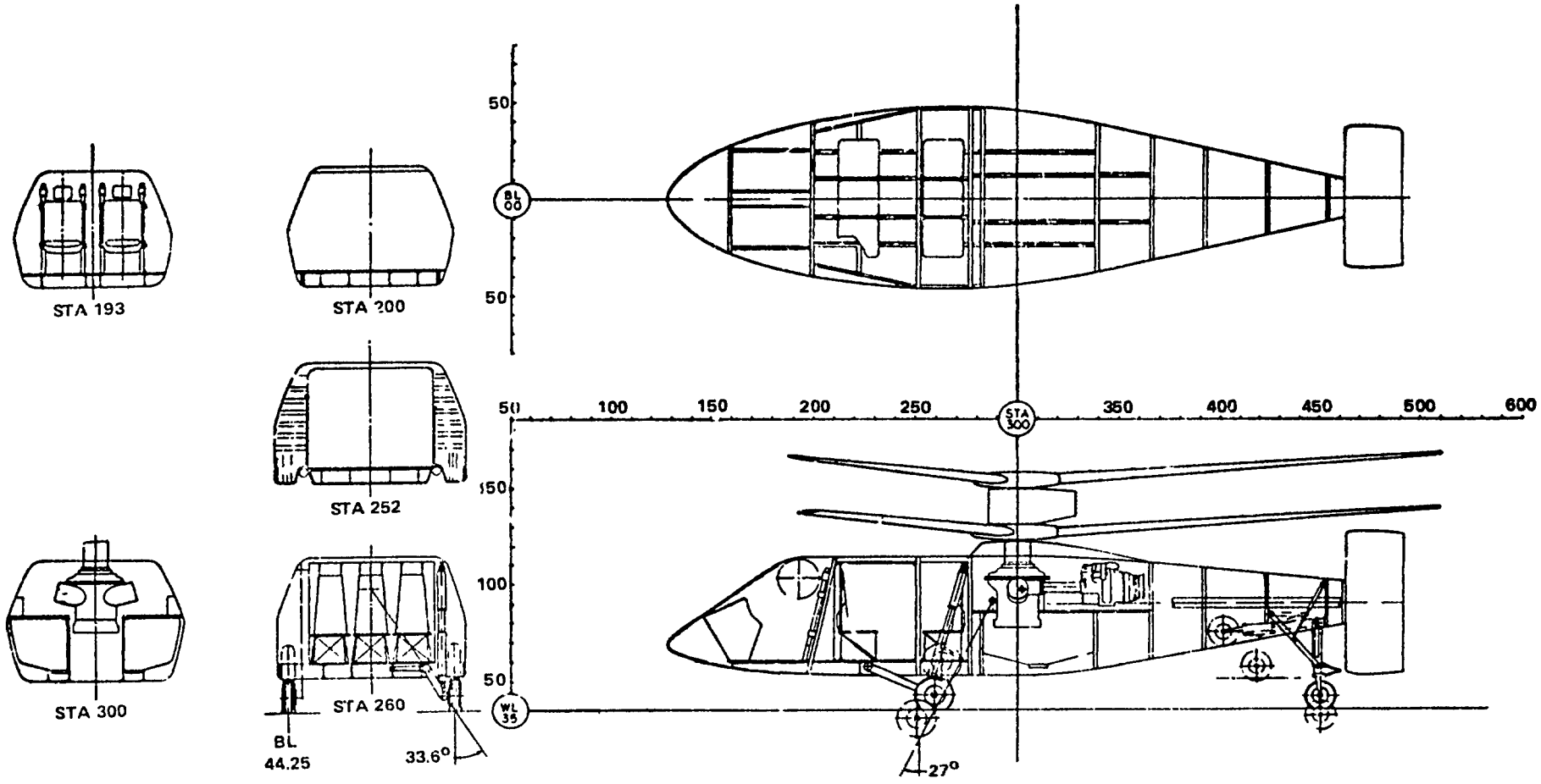

Figure 1. Baseline LHX General Arrangement

Crash dynamic loads, normal operating loads, and weights evaluation were developed relative to the baseline aircraft. Prior to analysis of loads, landing gear configurations were established. The main gears are located as close to the helicopter's forward center of gravity as feasible to utilize the major airframe structure or load carrying members for the landing loads. Main landing gears forward of the center of gravity require a tail gear.

TABLE 1. WEIGHT SUMMARY

	Weight (lb)
Total Structure	2272
Total Propulsion	2129
Total Equipment	3088
Total Weight Empty	7489
Useful Load	2511
Gross Weight	10,000

BASELINE LANDING GEARS

The landing gear configurations described herein are compatible to the LHX-utility class helicopter in the 6000- to 10,000-pound gross weight range. This version is configured for two crew members and six troops located forward of the heavy mass items such as rotor head and transmission. The aircraft is configured with a tail wheel landing gear arrangement as shown in Figure 1.

To comply with the crashworthy requirements and to meet the air transportability requirement, the main landing gear is located outboard of the troop cabin area with the shock strut positioned aft of the cabin door frame. The mounting point for the shock strut upper stage is provided by the aft cabin bulkhead which also supports the heavy mass items such as transmission and rotor head. To simplify the kneeling and/or retraction geometry, a trailing arm (or "drag beam") concept is utilized, thus allowing landing gear movement in a vertical plane throughout its stroke without obstructing the cabin door or infringing upon the space occupied by personnel. In the event of a crash impact this arrangement allows the gear to stroke without penetrating the fuel cells or occupied areas. AMCP 706-202 was used in determining the required angles defined in Figure 1.

All shock strut configurations are air-oil types designed in accordance with MIL-L-8552 and using either a variable orifice assembly or metering pin. Both static and dynamic seals, sealing surfaces, and seal grooves are designed in accordance with MIL-G-5514. For the baseline concepts, the various components comprising the shock struts and mounting or supporting structure are manufactured from heat treated, high strength steels (4340, 300M) or aluminum alloys (7075, 7175).

The tire sizes were selected based upon the landing gear static reactions taken at the helicopter design gross weight and to meet the requirement for a CBR of 2.5, equivalent to the H-60 series helicopter. The tires meet the requirements of MIL-T-5041, whereas wheels and brakes comply with requirements of MIL-W-5013. All main and tail landing gears described herein use the same wheels, tires, and brakes.

DESIGN LOADING REQUIREMENTS

Each landing gear system is designed to meet the following requirements:

Ground Handling

a. Towing - The towing requirements shall be in accordance with MIL-A-8862, and the basic design gross weight shall apply.

b. Jacking - Jacking requirements shall be in accordance with MIL-A-8862, and the basic design gross weight shall apply.

c. Mooring - Mooring requirements shall be in accordance with MIL-A-8862 except that a 70-kt horizontal wind shall apply.

d. Transport - Transport requirements shall be in accordance with AMCP 706-201 requiring a limit vertical load factor of 2.67 at the basic design gross weight.

Obstruction, Symmetric and Asymmetric Reserve Energy

a. Obstruction - Obstruction landing requirements shall be in accordance with MIL-S-8698 at the basic design gross weight.

b. Symmetric and Asymmetric - Symmetric and asymmetric landing conditions for tail wheeled gear configurations shall be in accordance with AMCP 706-201 except that landing surfaces shall be flat and firm. Limit landing conditions shall also be in accordance with AMCP 706-201 at the basic design gross weight.

Taxiing

a. Two-Point Braked Roll - The requirements of MIL-A-8862 shall apply for the two-point braked roll except that the vertical load factor at the center of gravity (CG) shall be 1.2 for all gross weights.

b. Three-point Braked Roll - The requirements of MIL-A-8862 shall apply to the three-point braked roll of a helicopter with nose wheel landing gear except that the vertical load factor at the CG shall be 1.2 for all gross weights.

c. Reverse Braking - The requirements of MIL-A-8862 shall apply.

d. Wheel, Brakes, and Tire Heating - The requirements of MIL-W-5013, MIL-T-5041, and MIL-B-8584 shall apply.

e. Turning - The turning requirements of MIL-A-8862 shall apply.

f. Pivoting - The pivoting requirements of MIL-A-8862 shall apply.

g. Taxiing - The taxiing requirements of MIL-A-8862 shall apply.

h. Special Tail Gear Conditions - The special tail gear conditions of MIL-A-8862 shall apply to a tail gear helicopter, including a tail gear obstruction condition.

Supplemental Design Requirements

a. The horizontal speed requirement shall include all speeds from zero up to 50 knots at limit sink speed on level ground and from zero up to 40 knots at reserve energy sink speed on level ground at the basic design gross weight.

b. Consideration shall be given to both crew-initiated and automatic retractable wheeled landing gear during transition to/from NOE flight.

c. Design fatigue loads shall be considered.

d. A landing gear shall have kneeling provisions for transportability.

Vertical Impact Design Conditions Envelope Crashworthy Gears

The crashworthy landing gear systems are designed to sink speed and altitudes given in Figure 2.

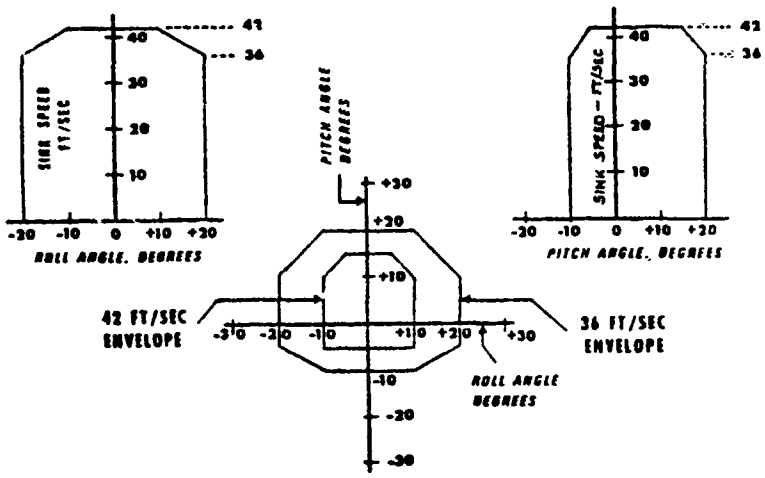

Figure 2. Crashworthy Design Envelope

Additional Crashworthy Design Requirements

1. Retracted or extended gear shall not, upon crash impact, protrude into occupied and fuel cell areas.

2. A retracted gear shall provide some vertical crash impact energy attenuation.

3. Fixed and extended/retractable gears shall remove their design incremental energy at sink speeds up to 42 fps.

Pitch, Roll and Velocities

1. No fuselage-ground contact shall occur, and there shall be minimal or no effect upon dynamic components during a crash impact with the landing gear extended. For vertical velocities of 15 and 20 fps, all combinations of the following pitch and roll attitudes shall be considered:

Roll (deg)	Pitch (deg)
0	- 5
+ 5	0

+10	+ 7.5
+15	+15

2. Injurious loadings, as defined in MIL-STD-1290, shall not be transmitted to the crew with the gear retracted, assuming energy absorbing subfloor structure and stroking seats. For vertical velocities of 25, 30, and 35 fps, all combinations of the following pitch and roll attitudes shall be considered:

Roll (deg)	Pitch (deg)
0	- 5
+ 5	0
+10	+ 7.5
+15	+15

3. Injurious loadings, as defined in MIL-STD-1290, shall not be transmitted to the crew with the gear extended, assuming energy absorbing subfloor structure and stroking seats. For vertical velocities of 30, 36, and 42 fps, all combinations of the following pitch and roll attitudes shall be considered:

Roll (deg)	Pitch (deg)
0	- 5
+ 5	0
+10	+ 7.5
+15	+15

NONCRASHWORTHY, RETRACTABLE MAIN GEAR

The normal main landing gear designed to the operating conditions as specified in the Design Loading Requirements is a noncrashworthy, retractable landing gear with kneeling capabilities to meet the air transportability requirements. The upper structural member, or retraction brace, and hydraulic retraction/extension actuator are mounted to the aft cabin bulkhead as shown in Figure 3. In addition to retracting and extending the landing gear, the hydraulic actuator also controls the kneeling function of the gear. Uplocks and downlocks within the hydraulic actuator locks the gear in its respective position during the retraction/extension cycle. The lower stage is an air-oil shock strut, as shown in Figure 4, designed to withstand the normal landing loads. The strut consists of a piston inside a cylinder housing, both components manufactured from 7075-T73 aluminum alloy. Internally, the strut assembly contains an aluminum alloy metering pin and a floating piston

which separates the air from the hydraulic fluid. This assembly acts as a shock strut capable of withstanding normal landing loads at 10 feet per second (fps) sink speeds with a reserve energy capability to 12.25 fps. Total wheel stroke from extended to compressed position is 12.00 inches, which results in a shock strut stroke of 11.90 inches per data from the KRASH computer program. The retraction brace connects the hydraulic actuator and the shock strut assembly to the aft cabin bulkhead. This member, as depicted in Figure 3, is made from 7075-T73 aluminum alloy. Mounting hardware is comprised of standard self-lubricating bushings and bearings, and is attached with high strength bolts.

A hydraulic system consisting of appropriate pump, valves, and reservoir with hydraulic fittings and hose assemblies is incorporated into the helicopter for providing power to the hydraulic actuator. An electrically operated system activates the hydraulic cycling of the landing gear and also includes the respective limit switches to indicate uplock and downlock positions.

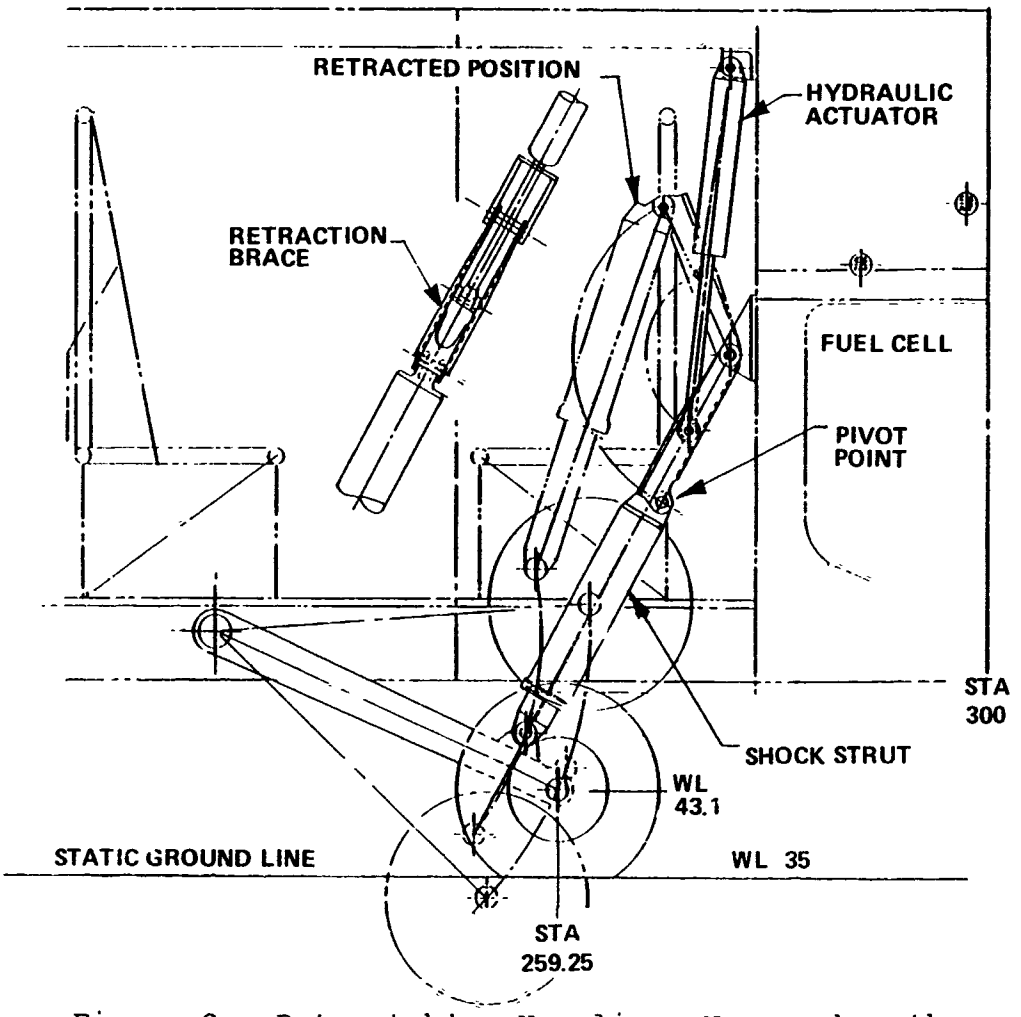

Figure 3. Retractable, Kneeling, Noncrashworthy Main Landing Gear

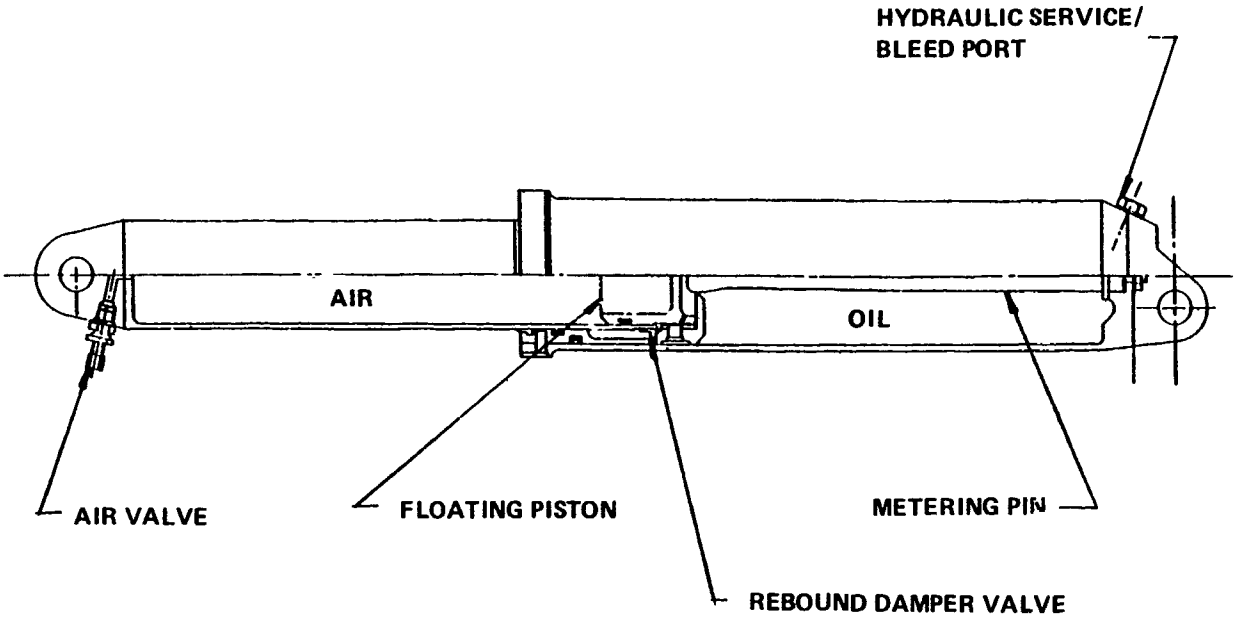

Figure 4. Shock Strut, Noncrashworthy, Main Landing Gear

CRASHWORTHY, RETRACTABLE MAIN GEAR

The main landing gear configuration depicted in Figure 5 is a crashworthy, retractable landing gear designed to normal operating requirements and the crashworthy requirements for the vertical impact design conditions. This concept is a trailing arm design with a universal-mounted, two-stage, air-oil strut designed to absorb 65 percent of the energy at a sink speed of 42 fps at a pitch and roll of zero degrees. In addition to meeting the crash impact criteria, the strut acts as a hydraulic retraction and extension actuator which also controls the kneeling action required for air transportability. In the event of crash impacts, the strut strokes in a vertical plane as the drag beam pivots about the fuselage attachment point, thus preventing the landing gear from protruding into the fuel cell or occupied areas. Also in a crash condition, the drag beam does not obstruct the cabin door opening, thereby allowing rapid evacuation of personnel. With the landing gear retracted, some vertical crash impact energy absorption is provided through the compression of the tire, wheel deformation, and controlled failure of the upper housing attachment fitting on the rear cabin bulkhead.

Both upper and lower shock strut stages are air-oil types designed to the requirements previously specified but utilizing a variable orifice assembly in lieu of a metering pin, as shown in Figure 6. With a metering pin, gear retraction would be hindered because of the interference between this pin and the floating piston. The lower stage is designed to withstand landing loads up to 12.25 fps reserve energy sink speeds within 14.50 inches total strut stroke. This assembly contains a piston inside a housing of which the upper portion is machined as the piston of the upper stage. Both components are made from 4340 heat treated steel. The upper housing which mounts to the airframe fitting is made from 7075-T73 aluminum alloy. Separating the air from the hydraulic oil in both stages is an aluminum alloy floating piston. Each stage contains an orifice assembly, split bearings, a lower housing bearing, and aluminum alloy retraction/kneeling piston. To retract, or kneel, the landing gear, hydraulic oil pressure is added to each respective housing port. At the same time, ports in the upper portion of the housings are opened to allow hydraulic fluid displaced during the retraction cycle to be bled into a reservoir. As the hydraulic fluid is pumped into the strut, both stages retract, resulting in gear retraction or aircraft kneeling. An external uplock system shuts the retraction system off when the gear is fully retracted. Reversing the cycle extends the gear.

Full strut travel is 27.00 inches which corresponds to an axle vertical travel of 29.00 inches, the travel required to fully retract or kneel the main landing gear. Mounting hardware consists of self-lubricating bushings and spherical bearing with high strength bolts.

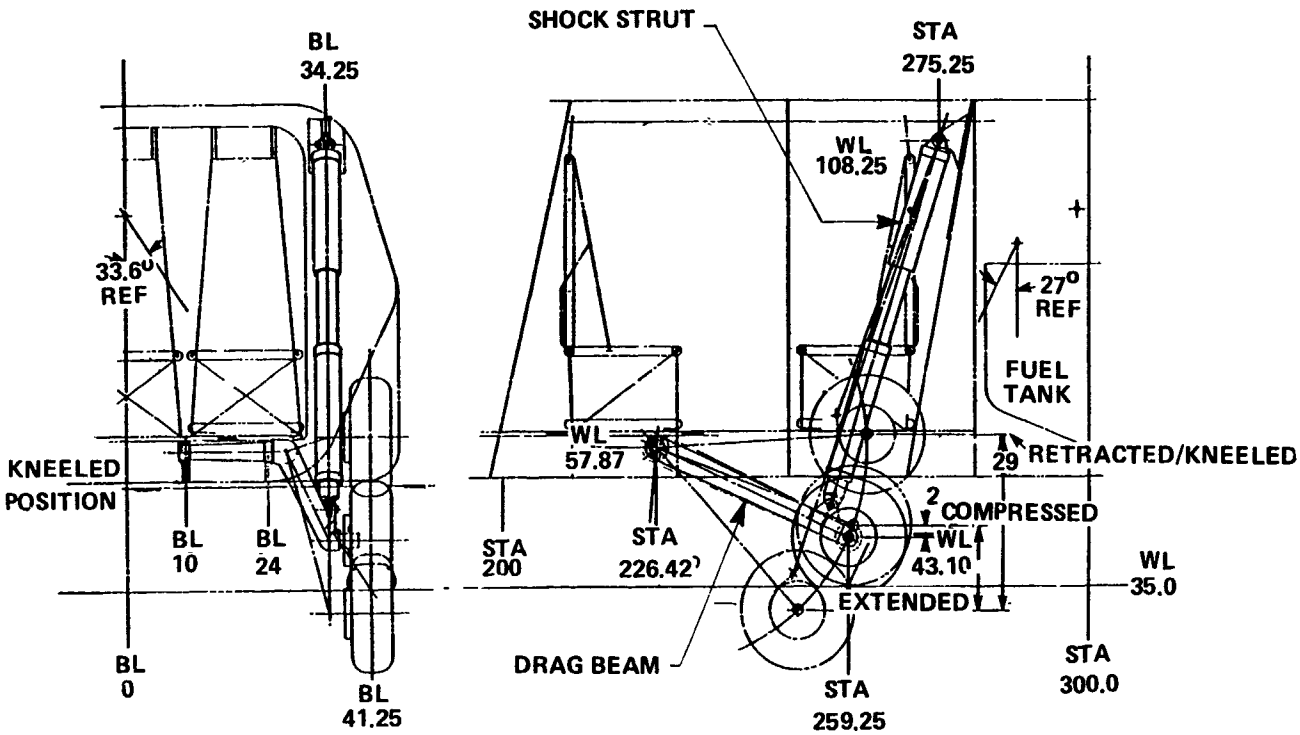

Figure 5. Retractable, Kneeling Crashworthy Main Landing Gear

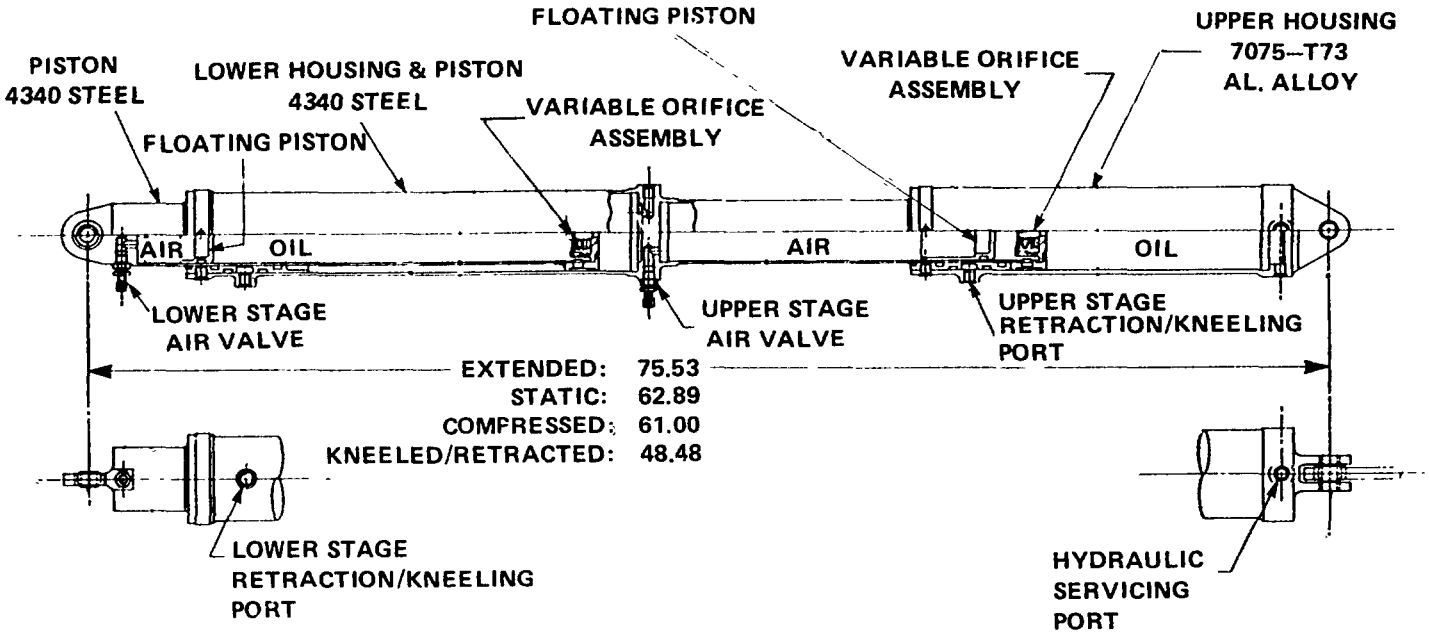

Figure 6. Shock Strut, Crashworthy Retractable Main Landing Gear

The main landing gear, in conjunction with the tail landing gear, has an energy absorption capability to prevent the fuselage from contacting the ground at a 20 fps sink speed. Results from the KRASH Computer program indicate that each main gear absorbs approximately 44% of the total energy for this sink speed rate. To meet this criteron, the upper and lower variable orifice assemblies are designed in such a way as to allow the shock strut to absorb energy at crash impacts resulting from 20 fps to 42 fps sink speeds and still react the loads due to normal landings up to 12.25 fps reserve energy sink speed.

The hydraulic system for controlling landing gear retraction, extension, and kneeling cycles is part of the helicopter overall hydraulic system and contains the appropriate shuttle valves, check valves, pumps, and accummulator or reservoir, with fittings and hose assemblies. An electrically operated system activates the hydraulic cycling of the landing gear and also includes the respective limit switches to indicate uplock and downlock positions.

To comply with the Supplemental Design Requirements specified, it is recommended that the landing gear be automatically retractable with pilot override. The aircraft's flight speed indicator and radar altimeter will provide signal indications for automatic retraction and extension, so that below (to be determined) knots and below (to be determined) feet from the ground, the gear will always be in the extended position unless the pilot chooses to override the indicators. Automatic extension/retraction reduces the pilot's work load.

CRASHWORTHY, FIXED MAIN GEAR

The main landing gear concept shown in Figure 7 is a crashworthy gear complying with the normal operating requirements of page 6 and the crashworthy requirements of page 8. This configuration is also a trailing arm design with the shock strut mounted to the lower end of the arm and to the upper fitting at the rear cabin bulkhead. This arrangement allows the strut to stroke in a fore and aft vertical plane as the drag beam pivots about the fuselage attachment point in the event of crash impacts, thus preventing the gear from puncturing the fuel cell or protruding into the occupied area.

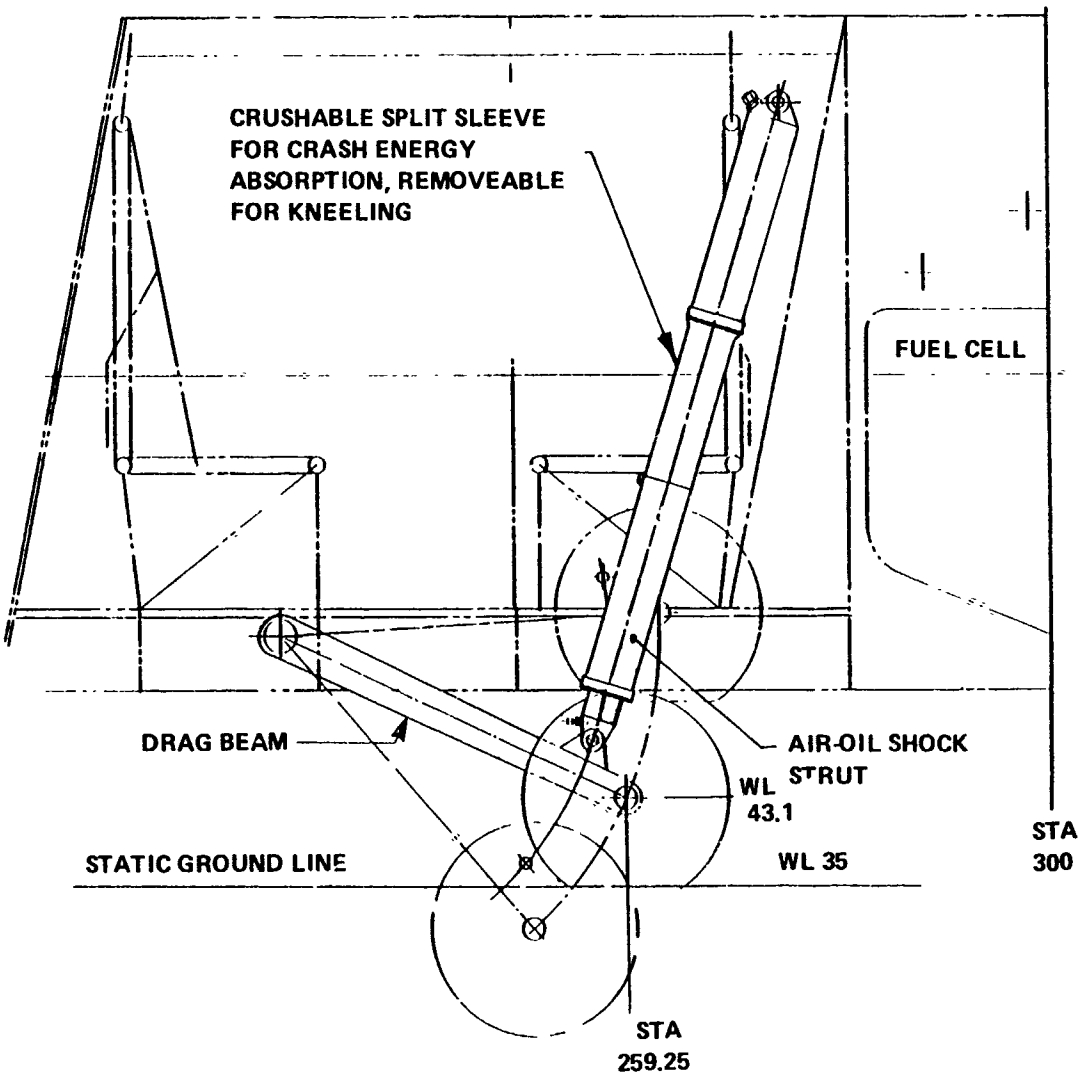

Figure 7. Fixed, Kneeling, Crashworthy Main Landing Gear

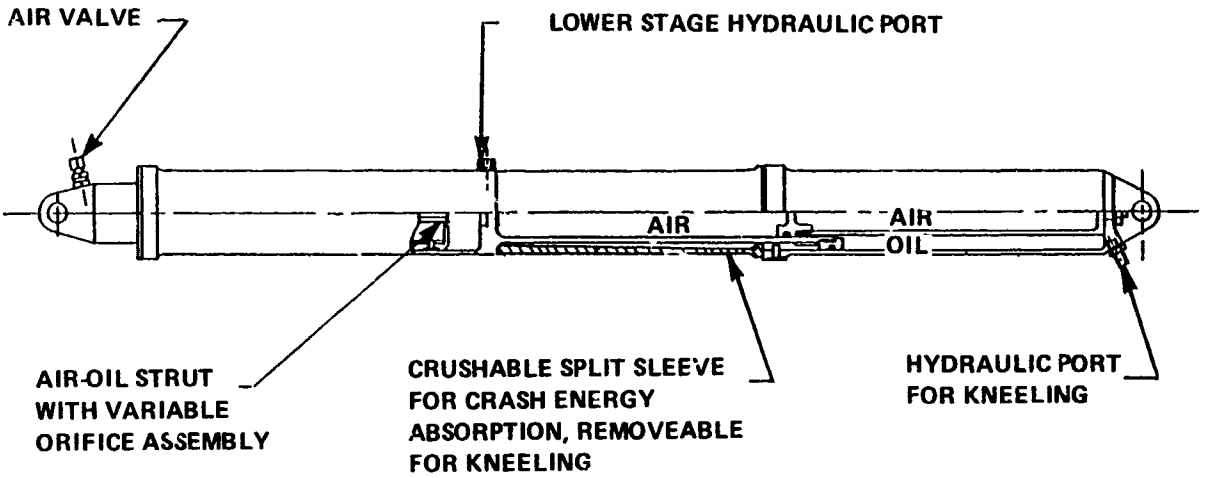

Figure 8. Shock Strut, Fixed, Crashworthy Main Landing Gear

The shock strut, as shown in Figure 8, is a universal-mounted, two-stage, air-oil strut designed to dissipate energy at sink speeds up to 42 fps crash conditions. The lower stage consists of a 4340 steel piston inside a housing made from 7075-T73 aluminum alloy. The upper segment of this housing is machined to become the piston for the upper stage. Separating the air from the hydraulic fluid is an aluminum alloy floating piston. The variable orifice assembly is designed to allow this lower stage to absorb energy up to 20 fps sink speeds within a 14.50-inch stroke. The upper stage contains an air and oil chamber which is bled off into a reservoir when kneeling the gear for air transportability of the helicopter. The upper outer housing is also made from 7075 aluminum alloy and attaches to the airframe bulkhead.

Separating the two stages is a crushable split sleeve for crash energy attenuation and is removable for kneeling the landing gear. The sleeve has a tapered section designed to crush progressively as the load increases caused by sink speeds in the range of 20 to 42 fps. Materials for this tube could be either steel, aluminum, or composites. To kneel the landing gear requires this sleeve to be removed and the hydraulic fluid in both the upper and lower stages to be bled off until the desired height is obtained. Reservicing the strut will extend the upper stage, allowing reassembly of the sleeve. All mounting hardware is comprised of standard high strength fasteners used with self-lubricating, spherical bearings and bushings.

The stroking sequence of the shock strut during crash conditions is such that as the sleeve crushes the upper stage compresses, which forces the hydraulic fluid out the service port to a reservoir. Blowout plugs could be designed into the inner tube in such a way as to allow the hydraulic fluid to enter the internal air chamber as the upper stage strokes, thus containing the fluid within the strut.

TAIL LANDING GEAR

The tail landing gear shown in Figure 9 is designed to the normal operating requirements and to the crashworthy requirements of a 20-fps sink speed. At 20 fps sink speeds, the shock strut of the tail gear is capable of absorbing 12% of the total energy of the aircraft within 12 inches of strut travel, which prevents the fuselage from contacting the ground. KRASH program data indicates that the total strut travel at 36 fps and 42 fps crash impact conditions is 24 inches, resulting in the deformation of the tail gear and tailcone structure. The combination of the two deformations results in 12% energy absorption capability distributed over a larger area.

The location for the tail landing gear was chosen in order to minimize the strut stroke when preventing fuselage contact with the ground at 20 fps sink speed conditions and to provide adequate rollover characteristics. This location also allows the landing gear to be retracted forward and to become completely enclosed within the tailcone, thus maintaining smooth airflow through the ducted fan. From this retracted position, the combination of gear weight and airflow would provide a positive release and extension to a down and locked position upon actuation of the emergency uplock release system. A hydraulic system powers the actuator with uplocks and downlocks which controls the retraction, extension, and kneeling of the tail landing gear. An electrical indicating switch system is also incorporated to indicate gear position.

The air-oil shock strut is a cantilever-mounted type designed to absorb energy at sink speeds up to 20 fps. The strut assembly consists of a steel piston and fork inside an aluminum alloy trunnion that mounts to the airframe structure. Separating the air from the hydraulic fluid is an aluminum alloy floating piston. The assembly also contains a variable orifice assembly. Mounted to the piston and fork is the axle, wheel, and tire. The drag brace assembly connects the trunnion to the airframe structure and pivots at the hydraulic actuator mounting point for retraction and kneeling. Both sections of the drag brake assembly are made from 7075 aluminum alloy. Standard fasteners and self-lubricating bearings and bushings are used throughout.

For a nonretractable tail landing gear, the configuration and components are the same as those for the retractable concept except for the removal of the hydraulic and electrical systems.

The hydraulic actuator in this concept would be used to kneel the landing gear by means of an external hydraulic power source. Smooth air flow through the ducted fan can be maintained by positioning a fixed stator that supports the shroud in line with the fixed tail gear.

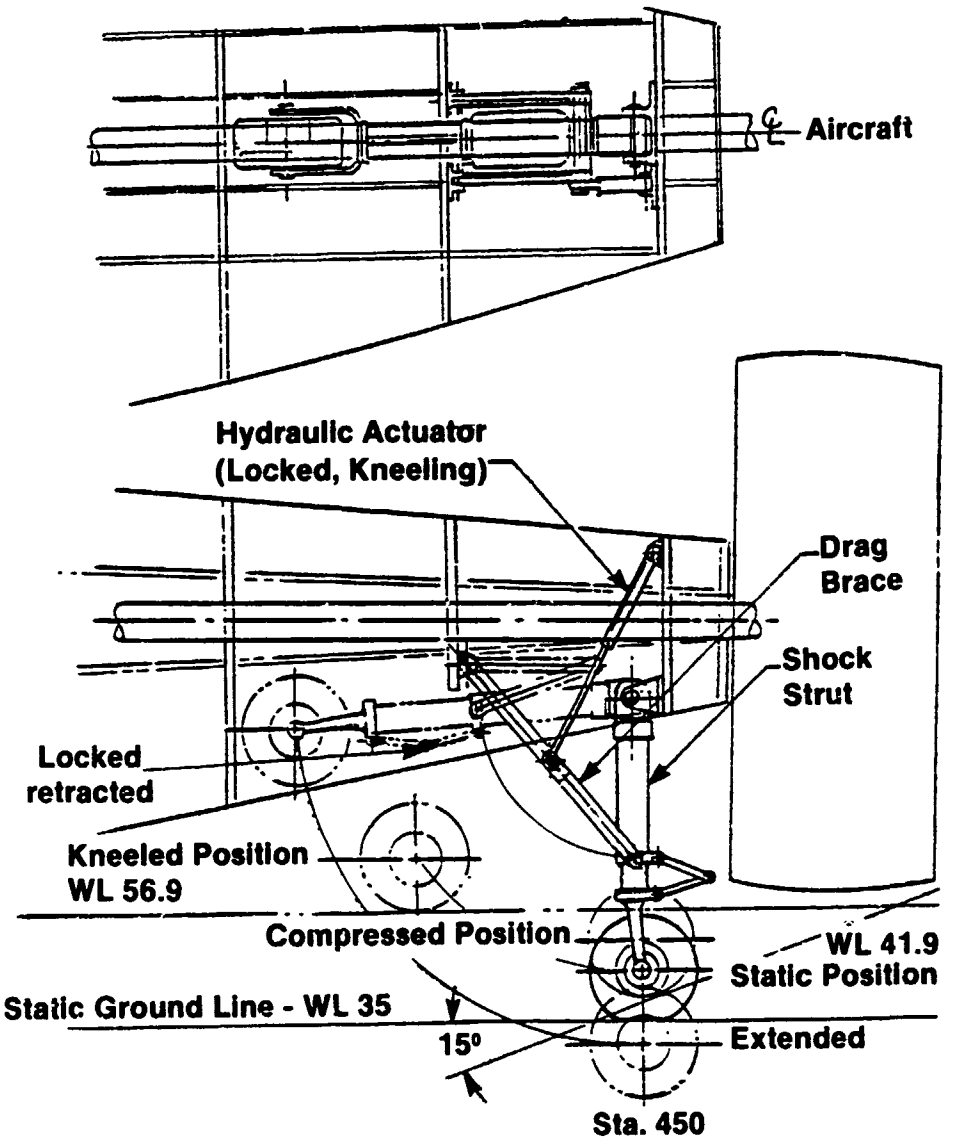

Figure 9. Baseline Tail Gear, Retractable

DRAG BEAM - MAIN GEARS

The trailing arm (or drag beam) geometry as shown in Figure 10 is used for all concepts of the main landing gear. In addition to providing an attachment point for the lower stage shock strut, it also mounts the axle, wheel, tire, and brakes. A jack pad conforming to MIL-STD-809 and configured in accordance with MS33559 is also incorporated and located to allow positioning of a jack under the drag beam with the tire flat. Material of the drag beam for both normal and crashworthy designs is 300M steel with the section thicknesses being the same for the normal and crash conditions. To mount the drag beam to the airframe attachment fittings requires the insertion of the drag beam into the fitting at BL 10 and positioned 90 degrees to the ground line. A bayonet fitting on the end of the beam locks into the airframe fitting when the beam is rotated 70 degrees to a static position. The drag beam is designed such that it can react the bending, torsional, and side loads imposed upon it during normal and crash impact landings.

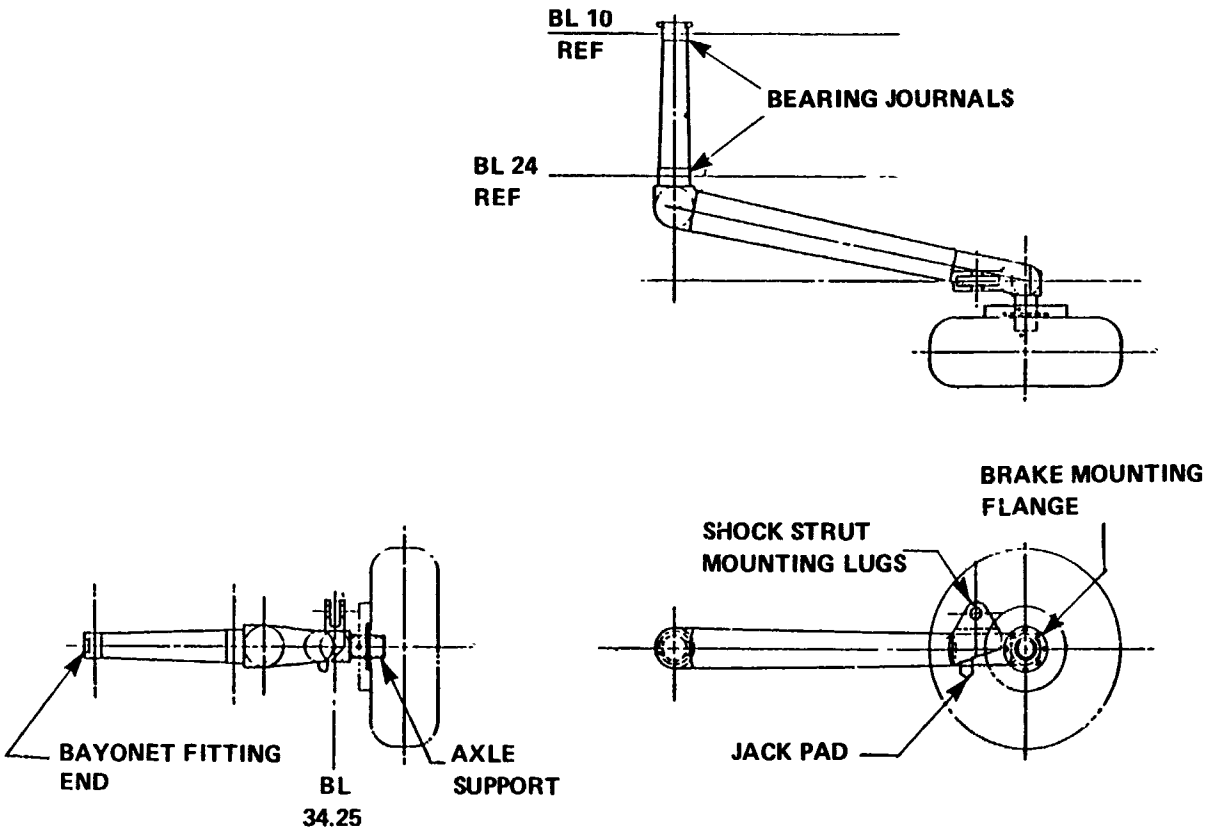

Figure 10. Drag Beam, Main Landing Gear

LOADS ANALYSIS

DESIGN MASS PROPERTIES

The basic design gross weight is 10,000 pounds and is employed to develop design mass properties. The CG (center of gravity) for the configuration is at fuselage station 288.0 and the corresponding moments and products of inertia are shown in Tables 2 and 3.

MAIN ROTOR PARAMETERS

The aircraft assumed for this study is a modification of the Sikorsky LHX air vehicle. The ABC main rotor is used and its parameters are shown in Table 3.

LANDING GEAR PARAMETERS

Main Gear

The three baseline design configurations for the selected aircraft landing gear are as follows:

1) A retractable gear designed to normal design operating conditions (taxiing, ground handling, obstructions, operating sink speeds, etc.).

2) A retractable gear designed to crashworthy requirements. Plastic deformation of the gear and mounting system is acceptable in meeting these requirements.

3) A nonretractable gear designed to crashworthy requirements as stated in paragraph 2 above.

The load-deflection curve for the main gear tires is shown in Figure 11.

Tail Gear

The baseline tail gear design is a typical, retractable landing gear. Tail landing gear is designed to 20 fps landings. Figure 12 shows the load-deflection curve for the tail gear tire.

TABLE 2. MASS PROPERTIES

LANDING GEAR STUDY - 10000 LB. GROSS WEIGHT UTILITY + PANEL POINTS

AIRCRAFT MASS PROPERTIES CALCULATED FROM THE DETAIL INPUT WEIGHT ITEMS
HORIZONTAL PANEL POINT MOMENT OF INERTIA SOLUTION - LATERAL SYMETRY ASSUMED

PP NO	WEIGHT LB	X STA	Z WL	IOXX LB-IN^2	IOYY LB-IN^2	IOZZ LB-IN^2	IOXZ LB-IN^2
1	47.03	122.0	69.7	6245.	6245.	2095.	93960.
2	636.95	165.0	78.0	346723.	169289.	147120.	512862.
3	1559.19	209.0	75.5	1542783.	921853.	1109182.	63938.
4	831.93	245.0	72.3	965260.	300308.	608693.	-399735.
5	1734.57	270.0	91.4	2654818.	2265292.	2247614.	2032916.
6	3533.12	307.5	106.0	6754372.	6601608.	8145856.	447151.
7	1125.99	397.5	87.8	467018.	724194.	743824.	-2331766.
8	481.33	474.0	89.0	401795.	241275.	253892.	-421215.

TOTAL WEIGHT = 10000.0 LB

CENTROID - IN

XSTA = 288.3 YBL = .0 ZWL = 90.9

MOMENTS AND PRODUCTS OF INERTIA ABOUT THE CENTROIDAL AXES

IXX = 14763272. LB-IN^2 IYY = 67204074. LB-IN^2 IZZ = 67608016. LB-IN^2

IXZ = 4250860. LB-IN^2

PRINCIPAL MOMENTS OF INERTIA 1

XZ PLANE

PHI = 4.5697 DEGREES

IXX = 14423515. LB-IN^2

IZZ = 67947771. LB-IN^2

TABLE 3. AIRCRAFT PROPERTIES AND PARAMETERS

Weight-Lb	10,000.
Center of Gravity	
XCG-in	288.0
YCG-in	0.0
ZCG-in	90.0
Moments of Inertia	
Ix - lb-in-sec^2	38207.
IY - lb-in-sec^2	173924.
Iz - lb-in-sec^2	174969.
Ixz - lb-in-sec^2	11013.
MAIN ROTOR	
Station (hub center line)	300.0
Buttline (hub center line)	0.0
Waterline (hub center line)	132.0

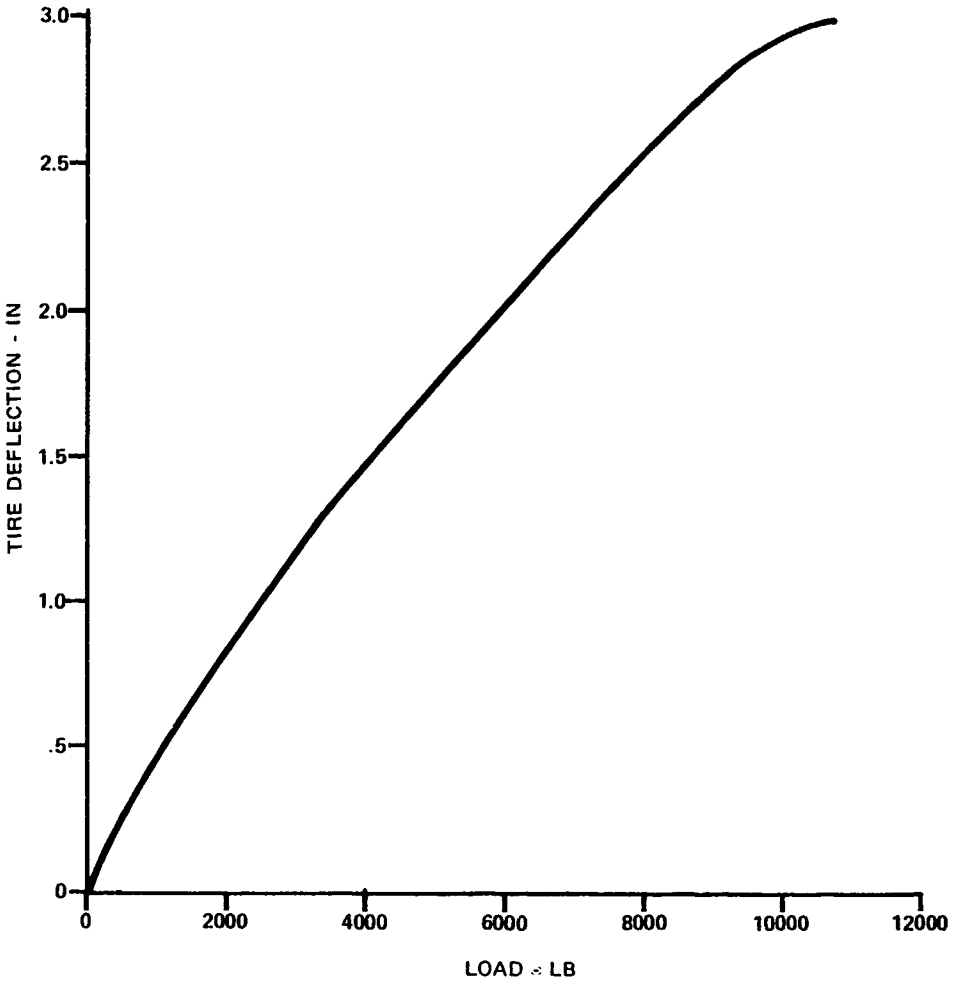

Figure 11. Main Gear Tire Load Vs. Tire Deflection

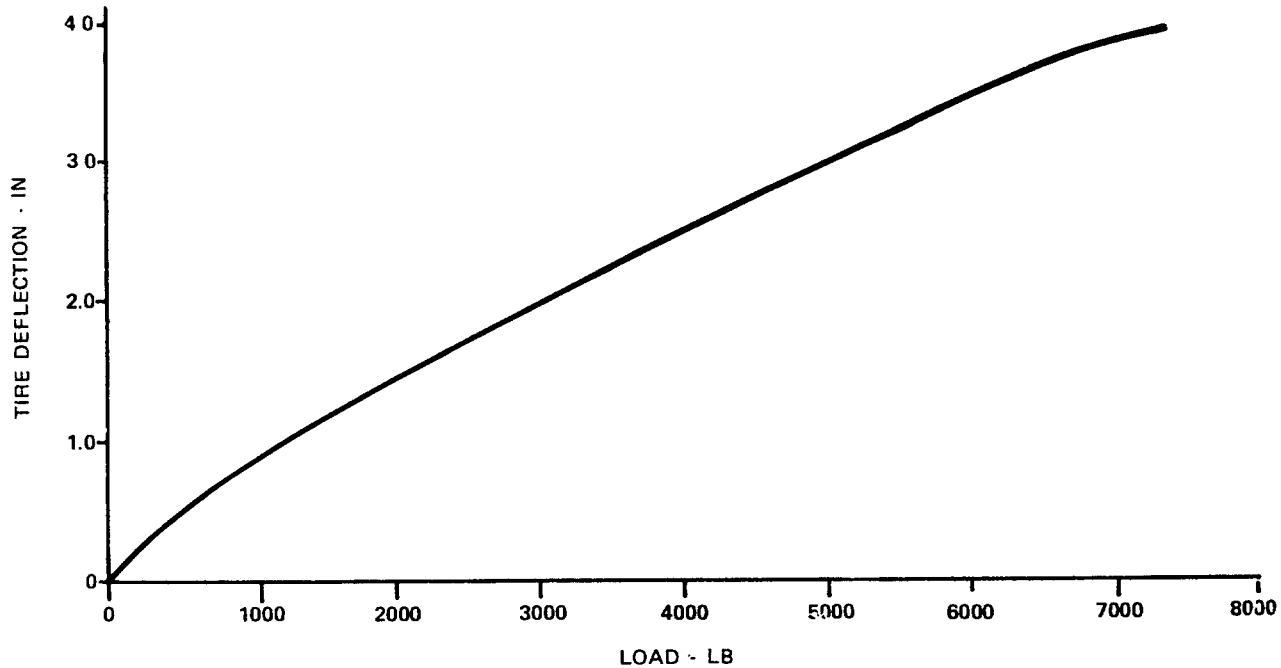

Figure 12. Tail Gear Tire Load Vs. Deflection

NORMAL OPERATING CONDITIONS

Static Design (Landing)

Landing loads are developed for two categories of normal landing conditions. Limit conditions are done at a sink speed of 10 fps and a forward velocity of 50 knots. Reserve energy conditions are done at a sink speed of 12.25 fps and a forward velocity of 40 knots. Both limit and reserve energy conditions are done at the basic design gross weight range using two-thirds rotor lift during landing. The landing gear is designed according to requirements set forth in MIL-S-8698, as well as additional design criteria prescribed in specification ANC-2. A landing gear vertical extension position of two-thirds from fully compressed serves as the application point for determining maximum vertical reaction while a nine-tenths extended position is used to evaluate spin up and spring back. Normal landing requirements and the calculated ground loads to meet the requirements are presented in Table 4.

Static Design (Ground Handling)

Loads data for braking, turning, pivoting, taxiing, towing, and jacking conditions are developed in compliance with MIL-A-8862. In every case, the gear static position serves as the load application point. Ground handling conditions are done at the basic design gross weight with the rotor lift equal to zero. A list of the ground operations requirements and resulting loads are presented in Table 5.

Normal Landing Requirements

For normal landings up to and including the reserve energy condition, the energy absorption system depends largely on the landing gear stroking and tire deflection to attenuate the impact loads without permanent structural deformation or malfunction of the landing gear. In this case, the airframe is idealized as a rigid body and emphasis is placed on modeling the landing gear characteristics. The actual KRASH model used in this study is illustrated in Figures 14 and 15. An indepth description of the mechanics of the KRASH program is provided on page 33. For normal landing conditions, the KRASH program is used to evaluate gear stroke and efficiency. Associated values of stroke and efficiency are then used as inputs to a Sikorsky developed program of energy equations in order to develop specification required landing and ground handling conditions. Loads corresponding to normal operating requirements are presented in Table 4.

CRASHWORTHY DESIGN REQUIREMENTS

Crash conditions are evaluated for landing impacts of up to 42 fps using one-G rotor lift at basic design gross weight. For vertical velocities up to 20 fps, the landing gear has been designed to attenuate the total impact energy while disallowing any fuselage ground contact or yielding of the airframe structure. This criteron has been met for simultaneous fuselage angular alignments of ±10 degrees roll and +15 to -5 degrees pitch. The landing gear and mounting system, however, may experience permanent deformation. For vertical velocities above 20 fps and up to 42 fps, yielding of airframe structure is acceptable. Envelopes of sink speed vs. fuselage angular alignment with the ground, for which the crashworthy landing gear system has been evaluated, are depicted in Figure 13.

Further design requirements for the crashworthy gear system are as follows:

- Any gear upon crash impact shall not protrude into occupied and/or fuel cell areas.

- A retracted gear shall provide some crash impact energy attenuation.

- At vertical sink speeds of 20 fps to 42 fps, the landing gear system shall provide for a limited 15% reduction in cabin space.

TABLE 4. NORMAL LANDING GEAR DESIGN CONDITIONS AND GROUND LOADS AT 10 FPS, 50 KTS

DESIGN CONDITION	GROUND LOADS						COMPONENTS DESIGNED
	MAIN GEAR			TAIL GEAR			
	F_x (lb)	F_y (lb)	F_z (lb)	F_x (lb)	F_y (lb)	F_z (lb)	
3 Pt.Level Landing							
• Spin-Up	1630	0	2436	729	0	947	
• Spring Back	-1351	0	12885	-651	0	4921	
• Maximum Vertical	2440	0	9758	477	0	1910	
2 Pt. Level Landing							
• Spin-Up	1638	0	2498	0	0	0	
• Spring Back	-1357	0	13162	0	0	0	
• Maximum Vertical	2366	0	9463	0	0	0	
Main Gear Obstruction	±4731	±4631	9462	0	0	0	Drag Beam
Tail Gear Obstruction	0	0	0	±2259	±2259	4518	
One Wheel							
• Spin-Up	1638	0	2498	0	0	0	
• Spring Back	-1357	0	13162	0	0	0	
• Maximum Vertical	2366	0	9463	0	0	0	
Tail Down Landing	0	0	0	-1162	0	4366	
Nose Down Landing	0	0	9462	0	0	0	

$+F_x$ Aft

$+F_y$ Left

$+F_z$ Up

TABLE 5 GROUND HANDLING - GEAR LOADS

Condition	C.G. Position (in.)	LEFT MAIN GEAR			RIGHT MAIN GEAR			TAIL GEAR		
		FXMG (lb)	FYLMG (lb)	FZLMG (lb)	FXRMG (lb)	FYRMG (lb)	FZRMG (lb)	FXTG (lb)	FYTG (lb)	FZTG (lb)
Limit Ground Handling Cond										
2 Pt Braked Roll	288.0	4000.	0.	5000.	4000.	0.	5000.	0.	0.	0.
Reverse Braking	288.0	-2751.	0.	3439.	-2751.	0	3439.	0.	0.	3122.
Turning C W. Outside Gear, O.G	288.0	0.	-3820.	7640.	0.	-426.	852.	0.	-754.	1507
Turning C.W. Inside Gear, I.G	288.0	0.	-1992.	6370.	0.	-664.	2123.	0.	-471.	1507.
Turning C.C.W. O.G.	288.0	0.	426.	852.	0.	3820.	7640.	0.	754.	1507.
Turning C.C W. I.G.	288.0	0	664.	2123.	0.	1992.	6370.	0.	471.	1507.

The light experimental helicopter (LHX) meets the objective of providing a high level of protection for its occupants in severe crash impacts with advanced landing gear systems and fuselage energy absorption capability. These impacts, specified in MIL-STD-1290(AV) (Modified) "Light Fixed and Rotor Wing Aircraft Crashworthiness", include impacts at 42 fps vertical velocity with 25 fps longitudinal velocity. The fuselage structure and landing gear has been demonstrated to protect the occupants and their living space in vertical crash impacts when roll angles are limited to 10 degrees or if the impact is at 36 fps with a 20-degree roll angle. The landing gear also meets crashworthiness requirements of decelerating the aircraft at normal gross weight from an impact velocity of 20 fps onto a level, rigid surface without allowing the fuselage to contact the ground.

Crashworthy seats provided for both crew and passengers are all equipped with improved restraint systems. The crew seats meet the crashworthiness requirements of USARTL-TR-79-22A "Aircraft Crash Survival Design Guide", and the troop seats shall be designed to meet the above requirements also.

The crash impact conditions investigated using the KRASH computer program are impacts on level rigid ground. The basic requirement of vertical impact design conditions envelope is to demonstrate the capability of the aircraft to withstand vertical impacts of 42 fps without either a reduction of cockpit or cabin height of more than 15 percent or causing the occupants to experience injurious decelerative loading. The envelopes of pitch and roll angle for both the 42-fps and the 36-fps vertical velocity are included in Figure 13. The crash impacts investigated by the KRASH program for the baseline landing gear designs are designated by an asterisk (*). For all these impact conditions 25 fps longitudinal velocity has also been included.

The KRASH computer runs for the design conditions are identified in Table 6.

TABLE 6. DESIGN CONDITIONS FOR CRASH IMPACTS

DESIGNATION	IMPACT VELOCITY VERTICAL (fps)	IMPACT VELOCITY LONGITUDINAL (fps)	ROLL ANGLE (deg)	PITCH ANGLE (deg)
LHX 11	42	25	0	0
LHX 03	42	25	10	10
LHX 12	42	25	5	15
LHX 13	42	25	10	-5
LHX 17	36	25	20	10
LHX 18	36	25	10	-10
LHX 19	36	25	10	20
LHX 30	20	-	10	15
LHX 31	20	-	0	0

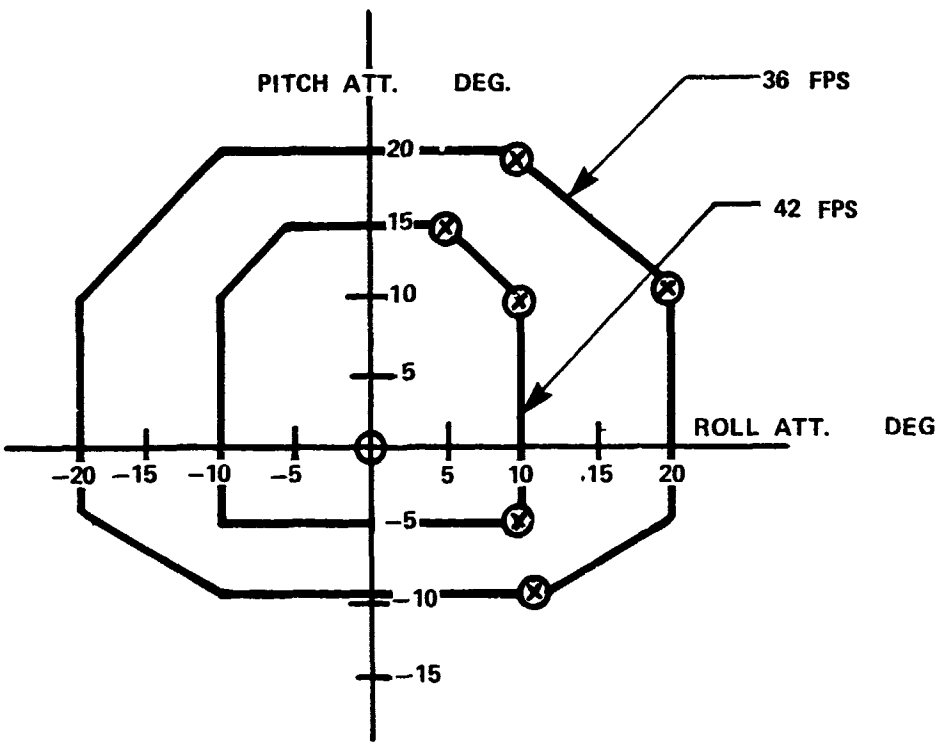

Figure 13. Pitch and Roll Attitudes in Crash Impacts

KRASH ANALYSIS

KRASH PROGRAM INPUT

The program requires the definition of a system of lumped masses, structural beams, springs and node points that simulate the mass distribution, the structural strengths and stiffness, the landing gear, and fuselage underside crushing characteristics as shown in Figure 14. Special means of simulating seated occupants are included in the KRASH program. A 50th percentile cockpit occupant has been simulated in the LHX KRASH model. The final model for advanced landing gear study is shown in Figure 15. The model is comprised of 15 masses, 15 springs, 16 beams, and 19 node points.

KRASH MODEL MASS PROPERTIES

The crash impact evaluation was conducted with the helicopter at its basic structural design gross weight of 10,000 pounds and a representative center of gravity at Fuselage Station 288.6 in., Butt Line 0.0 in., and Water Line 94.7 in.

Mass properties for each of the 15 lumped masses and their coordinates X (Fuselage Station), Y (Butt Line), and Z (Water Line) are presented in the Appendix.

In order to more accurately represent the structural members of the airframe and crushing of fuselage, use has been made of node points. These are points in space, each related to a specific mass, and which move with the mass in a fixed relation to the centroid of that mass.

The masses, with associated node points, and the coordinates X (Fuselage Station), Y (Butt Line), and Z (Water Line) of the 19 node points are presented in the Appendix.

The sixteen (16) beams of the model, the masses and node points that they join, and their structural characteristics are included in the beam data given in the Appendix.

The material properties included in the beam data are coded with material code (MC) numbers. The properties associated with each material code number are shown in the Appendix.

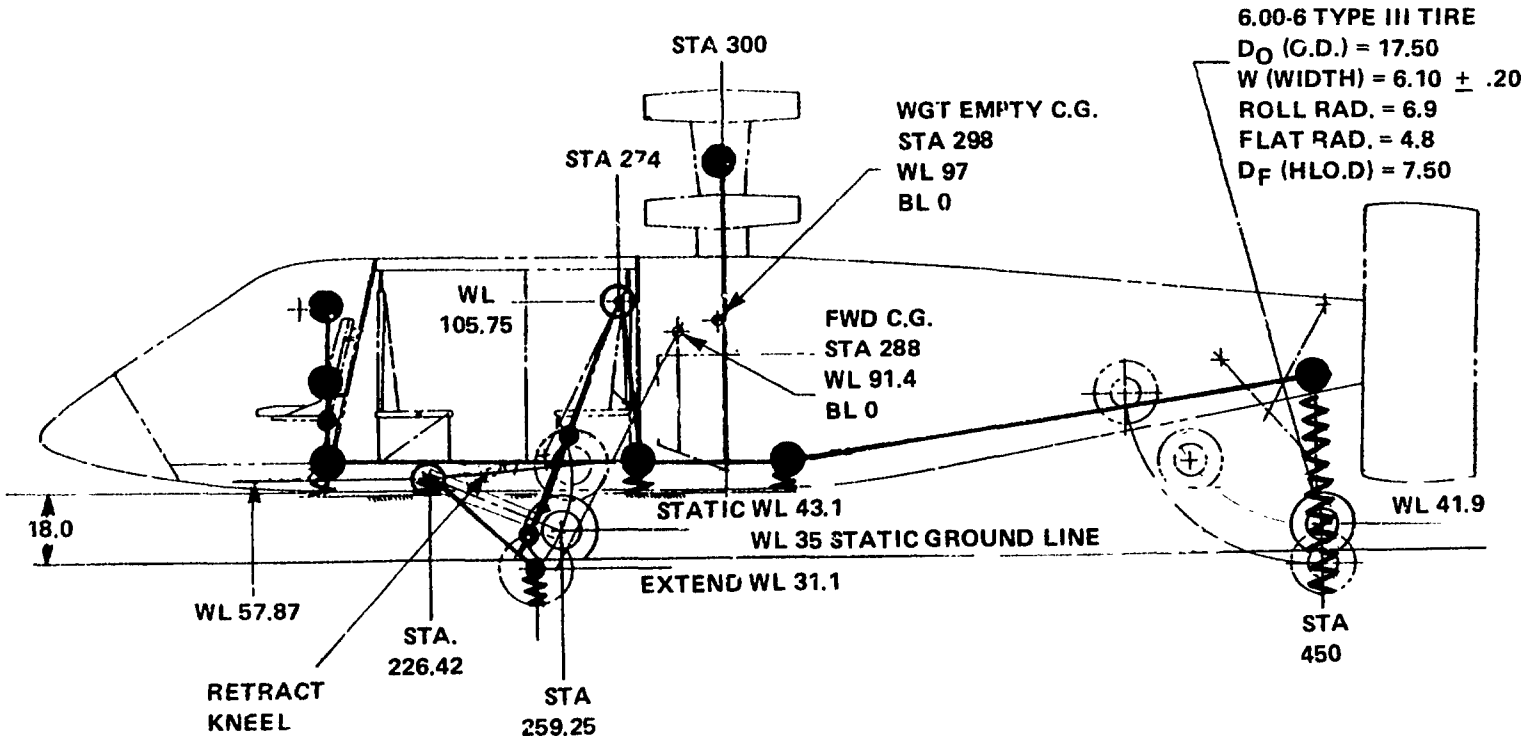

Figure 14. KRASH Model

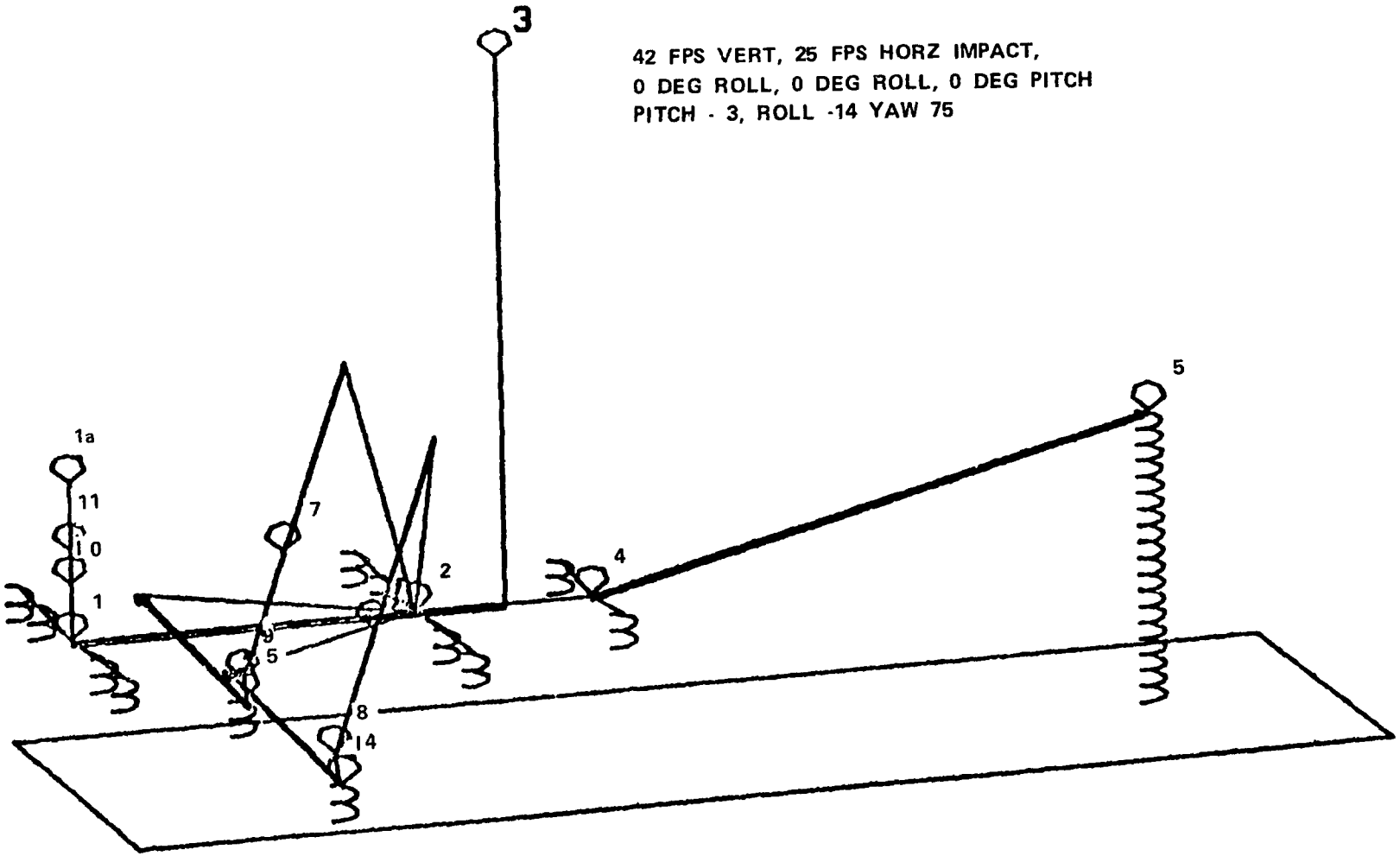

Figure 15. Final Model

KRASH MODEL SPRING PROPERTIES

The KRASH program requires that those portions of the aircraft that come into contact with the ground be represented by springs. The LHX model has 15 springs, each having stiffnesses (load-deflection characteristics) representative of the portion of the landing gear or fuselage underside that they simulate. The springs define a combination of linear and nonlinear behavior. Data which describes the load (F) and the deflection (S) characteristics of crushable structures are used. The deformation of crushable structure is such that a region is reached where the confined crushing is very significant and the stiffness increases substantially.

A typical load-deflection curve is shown in Figure 16; it represents a combined load-deflection of three different stiffness characteristics in series.

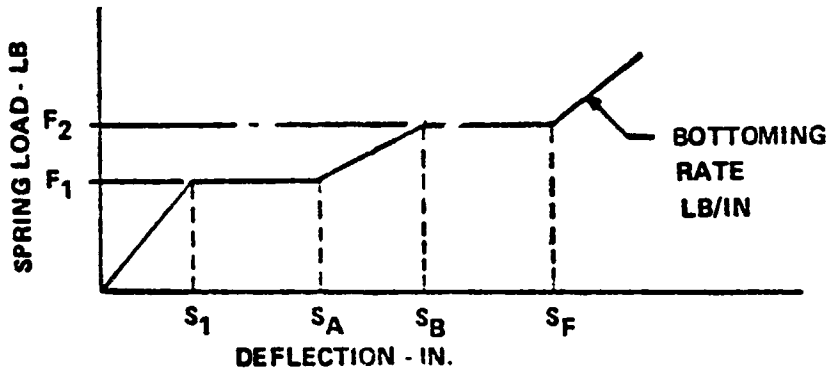

Figure 16. Typical Load Vs. Deflection Curve

The spring data, defining their load-deflection curves, is included in the Appendix.

It should be noted that the friction coefficient of 0.34 has been used for all the springs to represent deflated landing gear tire and fuselage crushing.

In the KRASH model, the main landing gear simulation includes the air-oil upper and lower oleo struts and the articulation of the gear that occurs during gear stroking. The tail gear has also been modeled as air-oil strut up to 20 fps vertical velocity impacts. Beyond 20 fps it has been modeled as a vertical spring.

The oleo input data given in the Appendix are used in the KRASH model.

The pilot seat and the 50th percentile occupant have been modeled in the KRASH analysis. The stroking seat has been represented by a nonlinear member which deflects elastically 0.75 inch then strokes at 14.5 'g'. The occupant and seat were included in the analysis to develop the seat stroking distance and then determine whether the seat had exceeded a maximum stroke of 12 inches.

LIFT FORCES

Masses in the KRASH model have lift loads applied to them equal to their own weight. Thus, the vertical impacts are representative of impacts at constant velocity.

KRASH PROGRAM RESULTS

The information on the dynamic effects of a crash impact available from a single KRASH computer program run results in 600-800 pages of printouts. Selected data from nine impact conditions studied for the design of the landing gear are summarized below.

Time of Zero Vertical Velocity at Aircraft C.G.

The variation of beam loads, inertial forces and fuselage crushing is of significance until the vertical velocity at the aircraft center of gravity has dropped to zero. The time at which this occurs for each of the conditions studied is included in Table 7. Any loads developed by the KRASH program beyond the time of zero velocity is the result of the crushed structure still behaving as elastic structure. This behavior then causes excessive rebounding and additional loads.

TABLE 7. TIME OF ZERO VERTICAL VELOCITY AT AIRCRAFT C.G.

Condition	LHX11	LHX03	LHX12	LHX13	LHX17	LHX18	LHX19	LHX30	LHX31
Velocity (fps)									
Vertical	42	42	42	42	36	36	36	20	20
Longitudinal	25	25	25	25	25	25	25	0	0
Attitude (deg)									
Roll	0	10	5	10	20	10	10	10	0
Pitch	0	10	15	-5	10	-10	20	15	0
Time (sec)	.1	.16	.20	.105	.17	.13	.26	.42	.20

Landing Gear Strut Maximum Stroke and Time of Occurrences

The main landing gear for the advanced technology helicopter consists of a two-stage air-oil oleo system. The lower stage is capable of stroking 14.50 inches while the upper stage strokes 12.5 inches. For normal landing and vertical impacts up to 12.25 fps the lower stage is used for the energy absorption. For a crash impact up to 20 fps both the upper stage and lower stage stroke with one set of orifice openings. For vertical crash impacts up to 42 fps both stages stroke again with added orifice areas. The maximum strut stroke and the time of occurrences are shown in Table 8. The time of occurrence is the time before the pistons "bottom" in the cylinders. Load data beyond the time of maximum stroke or bottoming is not considered. The time at maximum stroking given in Table 8 corresponds to the time of zero vertical velocity at the aircraft C.G. shown in Table 7.

TABLE 8. SUMMARY OF STRUT ACTIONS

KRASH Conditions		Oleo Strut	Time at Max Stroke (Sec)	Max. Stroke(in)
LHX11		R.H. Upper	0.09	11.5
Velocity	Vert. 42 fps	L.H. Upper	0.09	11.5
	Long. 25 fps	R.H. Lower	0.1	14.59
		L.H. Lower	0.1	14.59
0° Roll, 0° Pitch		Tail Gear	.1	23.34
LHX03		R.H. Upper	.17	8.3
Velocity	Vert. 42 fps	L.H. Upper	.16	11.1
	Long. 25 fps	R.H. Lower	.16	14.01
		L.H. Lower	.16	14.54
10° Roll, 10° Pitch		Tail Gear	.1	26.64
LHX12		R.H. Upper	.21	10.1
Velocity	Vert. 42 fps	L.H. Upper	.20	11.06
	Long. 25 fps	R.H. Lower	.20	14.28
		L.H. Lower	.20	14.51
5° Roll, 15° Pitch		Tail Gear	.1	26.2
LHX13		R.H. Upper	.11	10.21
Velocity	Vert. 42 fps	L.H. Upper	.10	11.21
	Long. 25 fps	R.H. Lower	.10	14.4
		L.H. Lower	.10	14.6
10° Roll, -5° Pitch		Tail Gear	.14	15.16
LHX17		R.H. Upper	.17	3.26
Velocity	Vert. 36 fps	L.H. Upper	.17	9.32
	Long. 25 fps	R.H. Lower	.19	9.79
		L.H. Lower	.14	14.05
20° Roll, 10° Pitch		Tail Gear	.12	23.85
LHX18		R.H. Upper	.12	7.43
Velocity	Vert. 36 fps	L.H. Upper	.12	10.89
	Long. 25 fps	R.H. Lower	.12	13.56
		L.H. Lower	.10	14.33
10° Roll, -10° Pitch		Tail Gear	.19	15.5
LHX19		R.H. Upper	.26	6.55
Velocity	Vert. 36 fps	L.H. Upper	.27	10.56
	Long. 25 fps	R.H. Lower	.27	13.27
		L.H. Lower	.25	14.33
10° Roll, 20° Pitch		Tail Gear	.11	21.5

TABLE 8. SUMMARY OF STRUT ACTIONS (Cont'd)

KRASH Conditions	Oleo Strut	Time at Max Stroke, (Sec)	Max. Stroke (in)
LHX30	R.H. Upper	.384	.98
Velocity Vert. 20 fps	L.H. Upper	.42	6.25
	R.H. Lower	.44	9.12
	L.H. Lower	.384	13.28
10° Roll, 15° Pitch	Tail Gear	.108	11.8
LHX31	R.H. Upper	.22	4.13
Velocity Vert. 20 fps	L.H. Upper	.23	4.16
	R.H. Lower	.18	12.59
	L.H. Lower	.18	12.59
0° Roll, 0° Pitch	Tail Gear	.12	11.68

GROUND LOAD

The landing gear structure has been designed for the dynamic load obtained from the KRASH analysis. Typical time histories of ground loads are shown in Figures 16, 17 and 18. As the gear articulates, the ground friction causes drag and side loads on the gear. The ground friction coefficient of 0.34 has been used in the analysis. Ground loads for the landing gear system are shown in Table 16.

Figure 17 shows the main gear drag load at the ground as a function of time. At zero time, the tail gear has contacted the ground and the helicopter is pitched forward. At 5 milliseconds, the main gear contacts the ground. Between 50 and 60 milliseconds an aft drag load is developed as the main gear articulates vertically and aft. As the assembly is moving aft, friction between the tire and ground develops which produces a forward acting drag load. The peak drag load is developed at approximately 70 to 80 milliseconds after the tail gear has contacted the ground. The next peak drag load occurs at approximately 179 milliseconds, which is 10 milliseconds after the helicopter's vertical velocity at the 6.6 is zero as shown in Tables 7 and 8. Load developed by the KRASH analysis are not considered after the C.G. velocity is zero.

Figure 18 shows the main gear side load at the ground as a function of time. The helicopter is assumed rolled to the right. At approximately 60 milliseconds after the tail gear has contacted the ground, a side load on the right main gear is developed to the left. The aircraft is now rolling to the left and a large side load is developed in the opposite direction at 90 milliseconds. Lateral rebounding then develops until the helicopter's vertical velocity is at zero.

Figure 19 shows the vertical load of the main right gear at the ground as a function of time. Again, 50 milliseconds after tail gear contacts, the main gear begins to develop maximum vertical loads. At approximately 80 milliseconds, the peak load is obtained. The helicopter is rolling to the left and the left hand gear contacts the ground. Again load data beyond 160 milliseconds is not considered.

Peak ground loads for the landing gear system are shown in Table 9. The peak loads, drag, side and vertical, are over a 10 to 20 millisecond time period since the time response to impact loads of all the materials in the gear vary. The loads of KRASH condition LHX03, for example, were obtained from Figures 17, 18, and 19 at 10 milliseconds for the vertical load. A similar method was used for the other KRASH conditions of Table 9.

TABLE 9. GROUND LOADS DATA

MAIN GEAR			
KRASH Conditions	Drag Load (+ Aft) Lb	Side Load (+ Left) Lb	Vertical Load (+ Up) Lb
LHX11 Velocity Vert. 42 fps Long. 25 fps 0° Roll, 0° Pitch	-16,000.0	-5,000.0	55,000.0
LHX03 Velocity Vert. 42 fps Long. 25 fps 10° Roll, 10° Pitch	-20,000.0	-15,000.0	60,000.0
LHX12 Velocity Vert. 42 fps Long. 25 fps 5° Roll, 15° Pitch	-22,000.0	-10,000.0	70,000.0
LHX13 Velocity Vert. 42 fps Long. 25 fps 10° Roll, -5° Pitch	21,000.0	2,000.0	62,000.0
LHX17 Velocity Vert. 36 fps Long. 25 fps 20° Roll, 10° Pitch	-6,000.0	-9,000.0	34,000.0
LHX18 Velocity Vert. 36 fps Long. 25 fps 10° Roll, -10° Pitch	11,000.0	1,500.0	32,000.0
LHX19 Velocity Vert. 36 fps Long. 25 fps 10° Roll, 20° Pitch	-1,000.0	-4,500.0	46,000.0
TAIL GEAR			
LHX30 Velocity Vert. 20 fps 10° Roll, 15° Pitch	-6,580.0	-1,390.0	20,015.0
LHX31 Velocity Vert. 20 fps 0° Roll, 0° Pitch	5,880.0	0.0	17,300.0

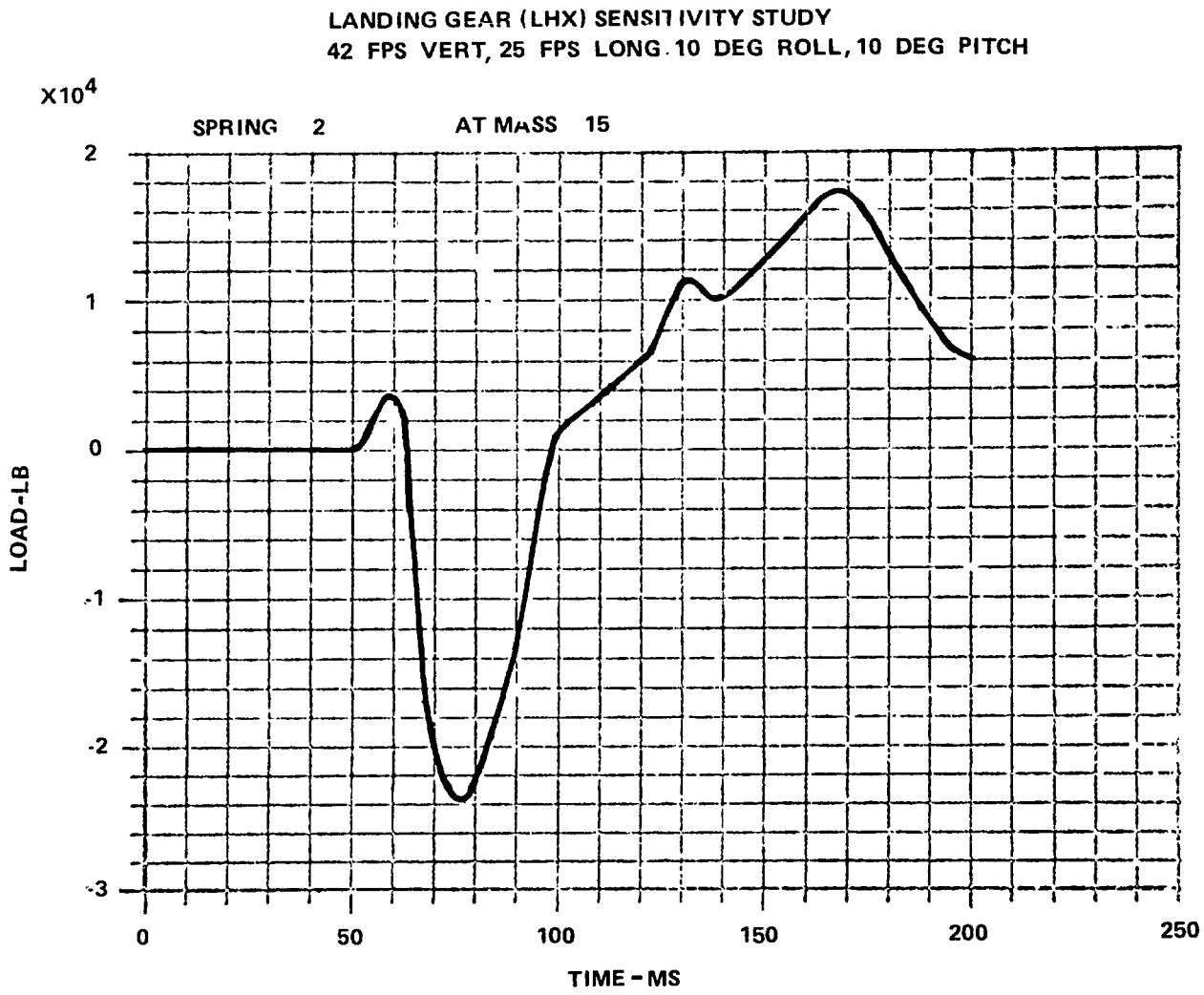

Figure 17. Drag Load Time History (Typ)

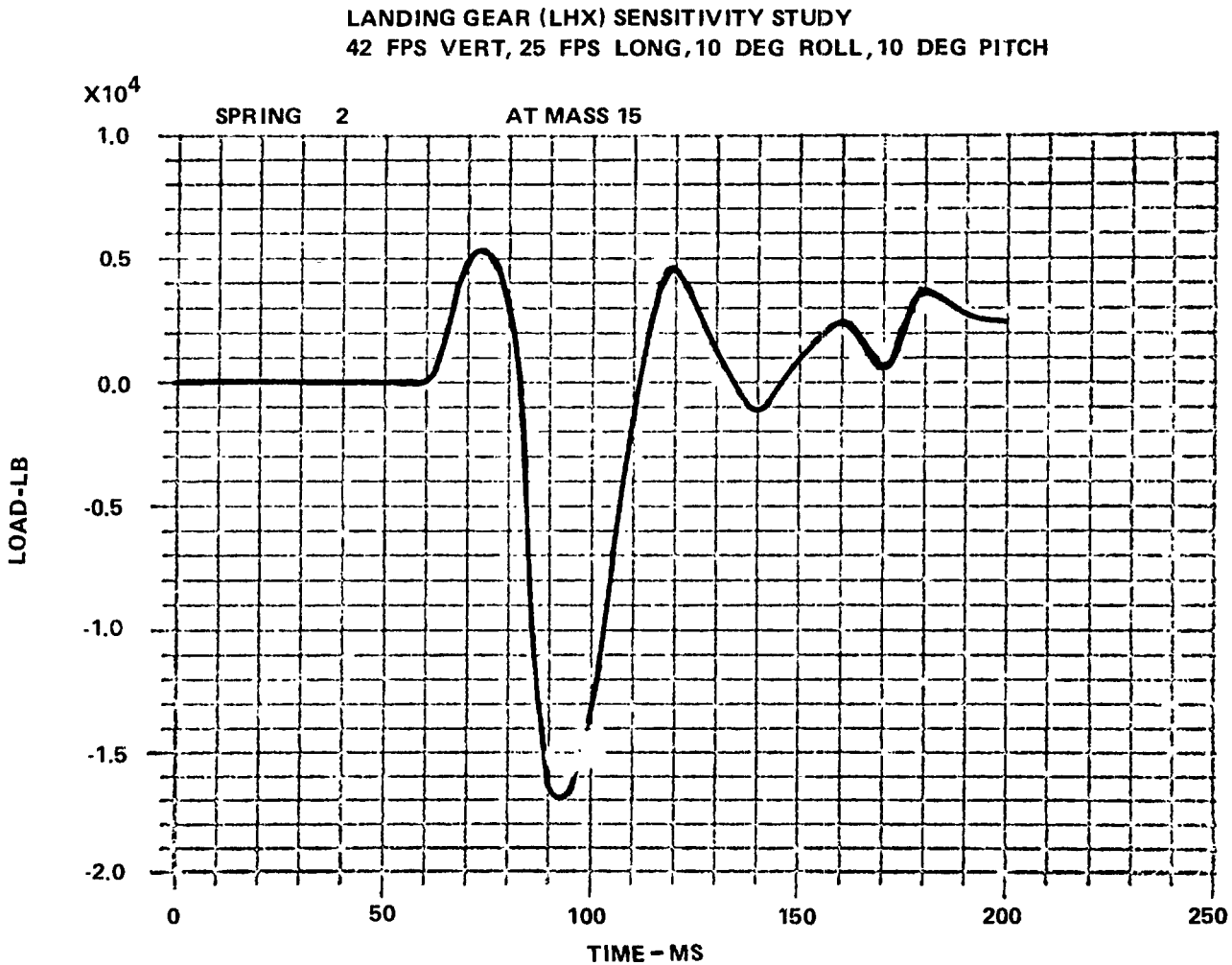

FIGURE 18. Sideload Time History (Typ)

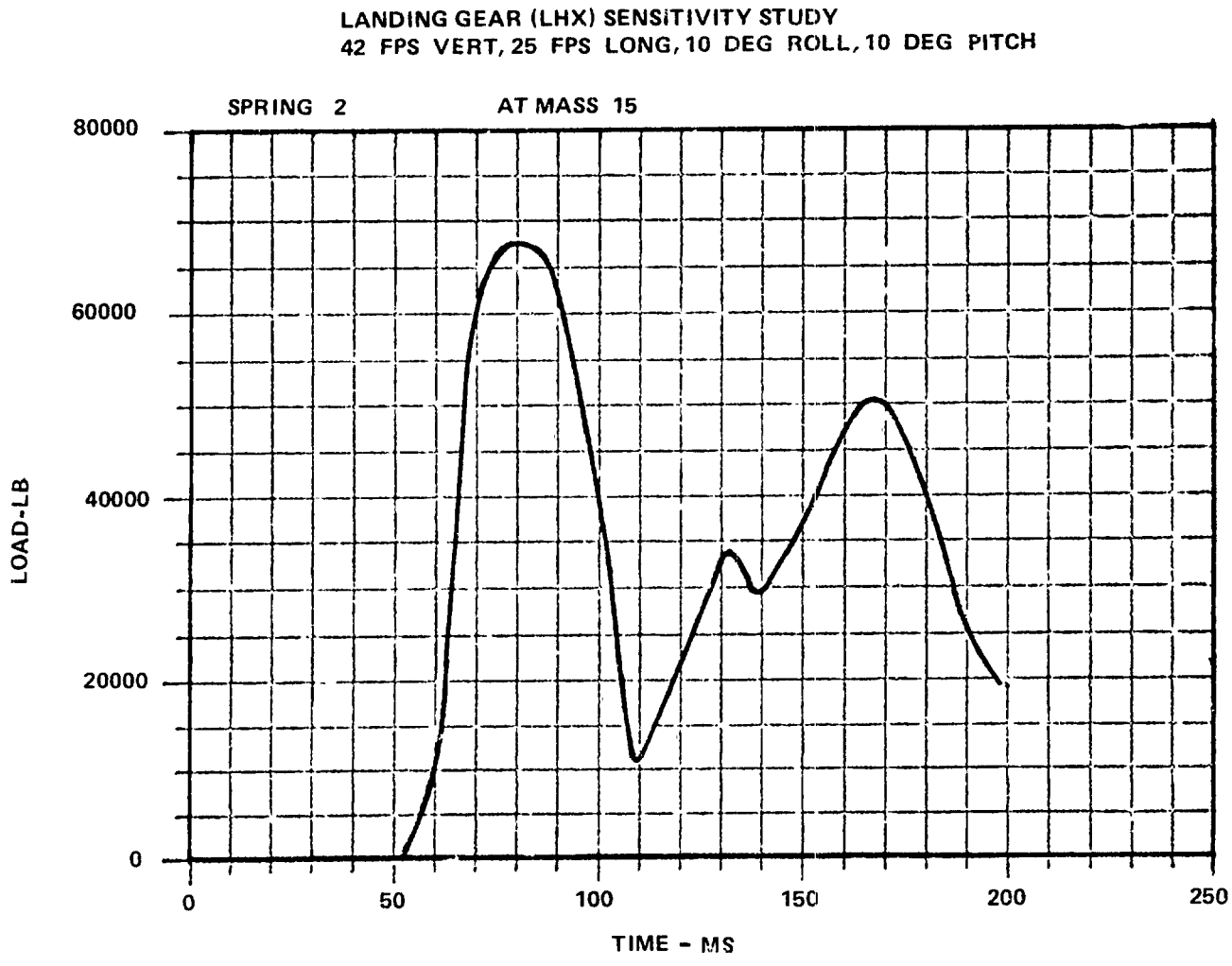

FIGURE 19. Vertical Load Time History (Typ)

INERTIAL LOAD FACTORS

The mass number 3 in KRASH analysis represents high mass items. This mass includes transmission mass, rotor mass and part of the engine mass. Structures to retain these masses are designed to the inertia load factors obtained from the KRASH analysis. Since all these high mass items are located away from the living space, in a severe crash impact it is very unlikely that these masses will penetrate into the living space. The maximum vertical load factors experienced by some of the representative masses are summarized in Table 10. Typical time histories of accelerations of high mass item 3 are shown in Figures 20 and 21.

Figure 20 is a plot of the vertical acceleration at high mass item 3 as a function of time from the time of initial ground contact at a level attitude and 42 fps vertical, 25 fps forward velocity (Cond. LHX 1). As the vertical ground load on the gears are developing, vertical accelerations on the high mass items are also being developed. The peaks in the acceleration plot are caused by the structure flexing.

Figure 21 is a plot of the force and aft accelerations at high mass item 3. This is due to the forward velocity at ground contact which is driving the wheel aft, then friction loads develop. This motion of the wheel causes a reversal of the fore and aft accelerations.

Table 10 is a summary of vertical load factors at the cockpit cabin, fuel for all areas, and the transmission for each crash condition specified.

TABLE 10. SUMMARY OF VERTICAL INERTIA LOAD FACTORS

CONDITION		LHX11	LHX03	LHX12	LHX13	LHX17	LHX18	LHX19
Velocity	Vert. (fps)	42	42	42	42	36	36	36
	Long. (fps)	25	25	25	25	25	25	25
Attitude	Roll	0°	10°	5°	10°	20°	10°	10°
	Pitch	0°	10°	15°	-5°	10°	-10°	20°
At Cockpit		55.28g	48.20g	51.70g	56.85g	32.17g	46.49g	37.50g
Mass 1		t=.080	t=.15	t=.190	t=.080	t=.170	t=.080	t=.250
At Cabin		37.34g	26.25g	32.65g	41.45g	30.35g	24.29g	27.42g
Mass 2		t=.110	t=.160	t=.120	t=.100	t=.160	t=.120	t=.270
At Transmission		37.09g	19.21g	21.90g	44.02g	15.97g	22.86g	23.83g
Mass 3		t=.100	t=.170	t=.210	t=.100	t=.150	t=.110	t=.270
At Fuel Cell		41.71g	21.98g	21.10g	36.29g	18.90g	23.52g	19.45g
Mass 4		t=.09	t=.150	t=.210	t=.100	t=.150	t=.110	t=.280

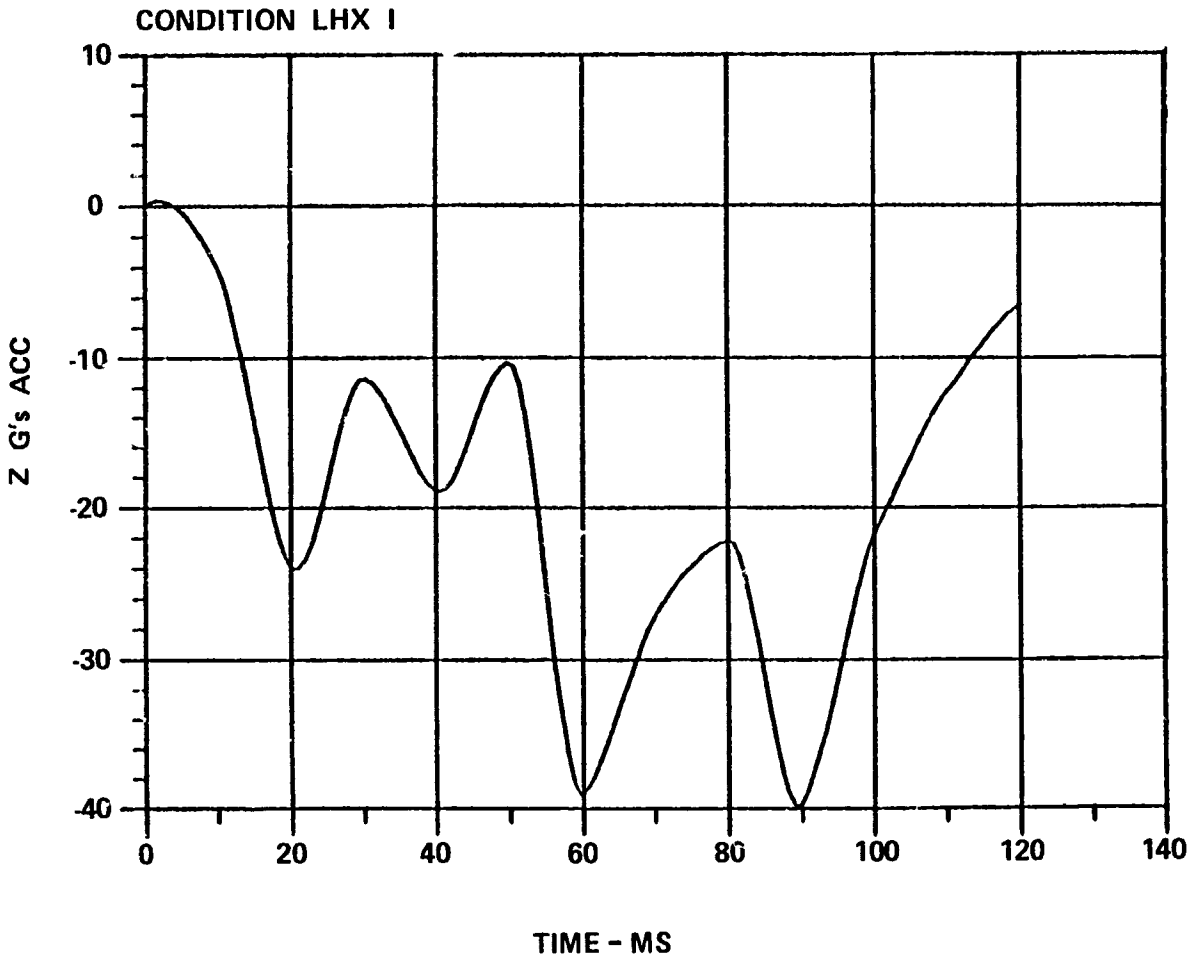

Figure 20. Vertical Acceleration Time History on High Mass Items

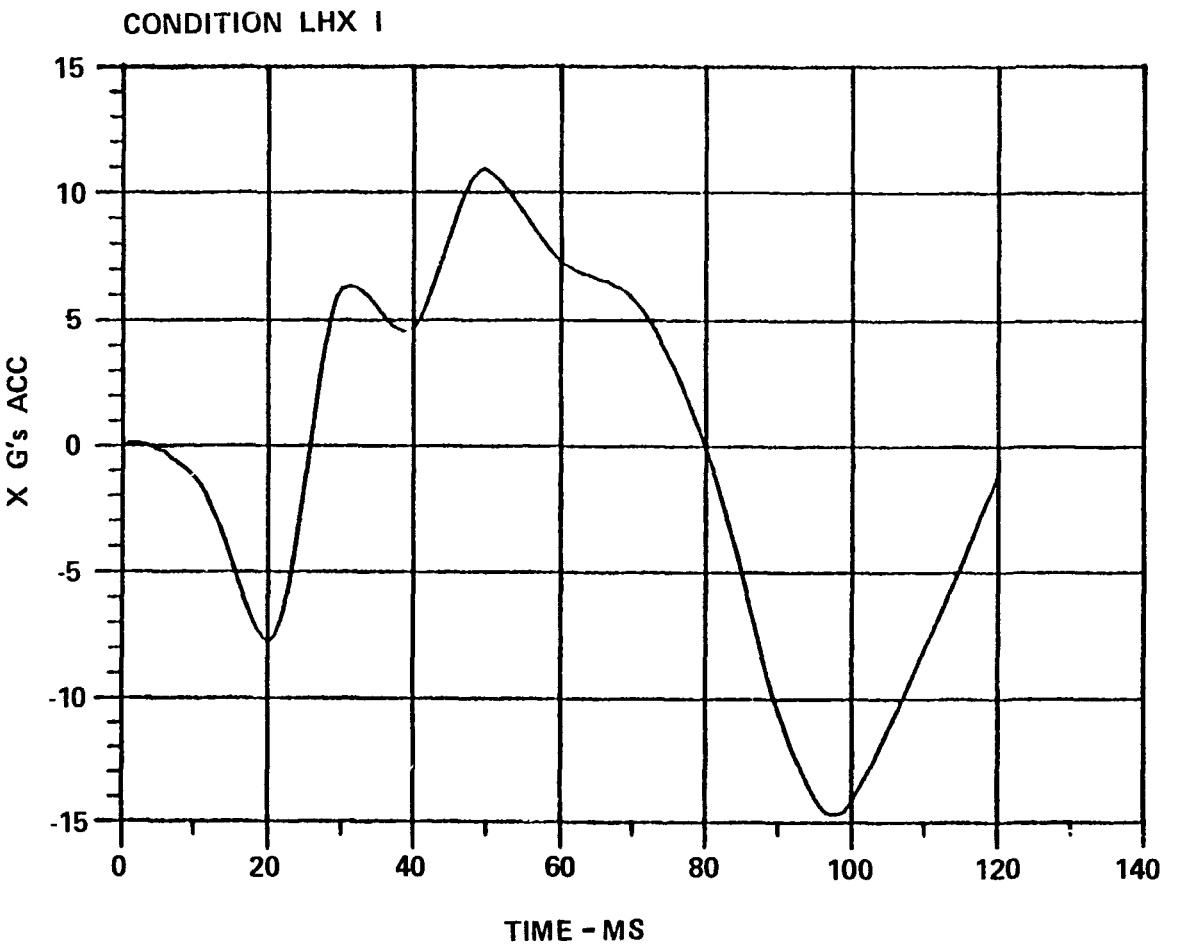

Figure 21. Longitudinal Acceleration Time History on High Mass Items

SEAT STROKING

The vertical stroking capability of the cockpit seat included in the KRASH model is simulated by beams that yield at a constant load after a small initial elastic deflection. The seat cushion has been represented as a soft elastic member, and a 50th percentile man with a Dynamic Response Index (DRI) spine has been used as an occupant. The seat is capable of stroking 12 inches at 14.5g. The seat, required in the 42 fps impact, strokes 9.98 inches, which is consistent with the cockpit capability. To find the level of protection provided to the occupant, a comparison between KRASH floor pulse and seat design pulse has been done. In all cases the velocity change is less than 50 fps. A typical floor pulse with superimposed seat design pulse is shown in Figure 22. Table 11 summarizes the cockpit seat stroking data. The 9.98 inches of seat stroking occurs during a 42-fps sink speed, 25 fps forward speed, rolled 20 deg and pitched -5 deg, as shown in Table 11. The stroking begins .0794 second after ground contact. Maximum stroke is obtained .180 second after ground contact, as shown in Table 11. The time of stroking is .180 - .0794 = .100 second.

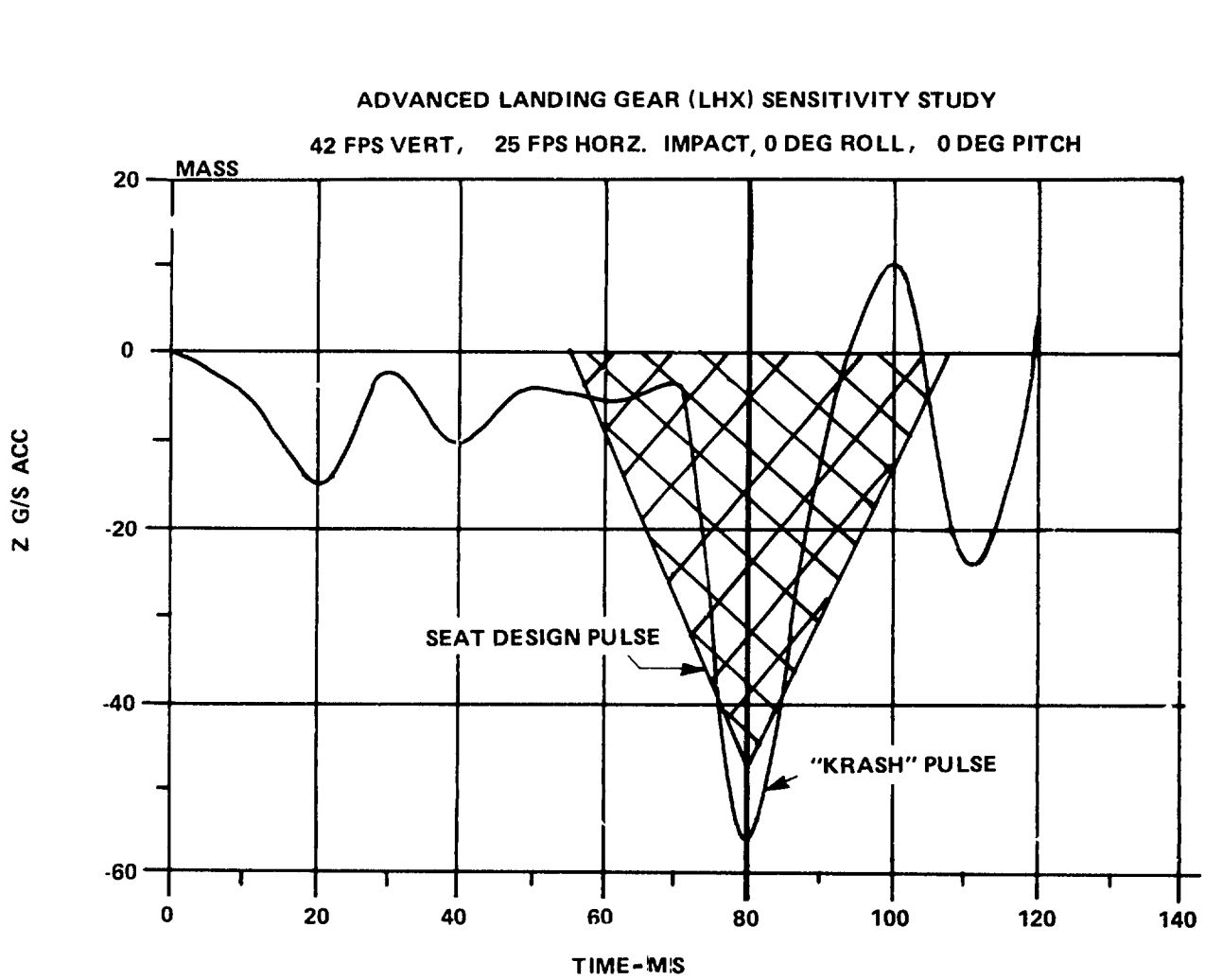

Figure 22. Vertical 'G' Pulse on Seat

TABLE 11. SUMMARY OF COCKPIT SEAT STROKING

CONDITION		LHX11	LHX03	LHX12	LHX13	LHX17	LHX18	LHX19
Velocity	Vert. (fps)	42	42	42	42	36	36	36
	Long. (fps)	25	25	25	25	25	25	25
Attitude	Roll (deg)	0	10	5	10	20	10	10
	Pitch (deg)	0	10	15	-5	10	-10	20
Cockpit Seat Max Stroke (in.)		4.56	7.15	7.88	9.98	6.91	9.17	6.73
Time (sec)	Initiation	.044	.111	.127	.0794	.168	.0788	.222
	Max Stroke	.13	.200	.230	.180	.300	.180	.340

FUSELAGE CRUSHING

The amount of crushing of the fuselage underfloor structure is predicted by the KRASH computer program in terms of deflections of the springs used to simulate the understructure crushing characteristics.

The frames and beams below the floor and fuel cells are constructed of graphite/epoxy. Graphite/epoxy tape and fabric are used in the frames and beams to react primary airframe loads. The depth of the structure is approximately 7-3/4 inches. Figure 23 is a sketch of the subfloor structure.

Kevlar epoxy could be used as a crushable structure and graphite epoxy as primary structure, as shown in Figure 23; however, a lower weight structure was obtained with full depth, vertical sine wave graphite epoxy webs.

Each KRASH computer analysis contains a summary of spring loading and unloading, including maximum forces and deflections.

Table 12 is a summary of the understructure crushing of 12 springs. The locations of these springs in the airframe are shown in Figure 15. The amount of fuselage crushing predicted in two crash impact conditions is illustrated in Figure 23. At 42 fps level impact fuselage, crushing is less than 3-3/4 inches. When the crash zone exceeds 3-3/4 inches, the graphite upper structure will crush locally to a point beyond which there will be local structural failure. In a 36-fps, 20-degree roll, and 10-degree pitch condition, before the crush line goes above the floor, there will be secondary structural failure of lateral beams, "parallelo-gramming" of the fuselage, and the remaining structure will withstand the crash loads. Thus 85% of the living space shall be maintained in a severe roll impact.

Figure 25 presents the results of crushing tests conducted on beam members with webs of Kevlar epoxy or aluminum. From Figure 25 a 4-ply Kevlar sine wave web is shown to have crushing capabilities (load deflection) which are better than aluminum webs or 4-ply Kevlar webs with beaded stiffeners.

TABLE 12. SUMMARY OF THE UNDERSTRUCTURE CRUSHING

SPRING LOCATION MASS#,NODE #	STA	BL	WL	CONDITION / LHX 11 42 FPS VERT 25 FPS LONG 0°R, 0°P	LHX 03 42 FPS VERT 25 FPS LONG 10°R, 10°P	LHX 12 42 FPS VERT 25 FPS LONG 5°R, 15°P	LHX 13 42 FPS VERT 25 FPS LONG 10°R,-5°P	LHX 18 36 FPS VERT 25 FPS LONG 10°R, -10°P	LHX 17 36 FPS VERT 25 FPS LONG 20°R, 10°P	LHX 19 36 FPS VERT 25 FPS LONG 10°R, 20°P
1,1	200.	24.	60.5	2.64	1.41	2.0	1.25	1.17	-	.97
1,2	200.	-24.	60.5	2.64	3.38	3.16	3.90	4.26	2.45	3.55
1,3	200.	+41.	60.5	2.64	.78	1.6	.84	.56	-	.217
1,4	200.	-41.	60.5	2.64	4.1	3.56	4.84	5.36	5.04	4.47
2,9	226.17	27.	57.87	-	-	-	-	-	-	-
2,10	226.17	-27.	57.87	-	.56	.22	.46	.52	1.13	.766
2,5	279.	24.	60.5	1.48	-	-	-	-	-	-
2,6	279.	-24.	60.5	1.48	1.08	.207	1.91	-	1.64	-
2,7	279.	46.	60.5	1.48	-	-	-	-	-	-
2,8	279.	-46.	60.5	1.48	2.74	1.03	2.86	.36	7.54	1.29
4,2	320.	24.	60.5	-	-	-	-	-	-	-
4,3	320.	-24.	60.5	-	1.16	-	1.6	-	3.17	-

NOTE: No fuselage crushing occurred at sink speeds of 20 fps or less (conditions LHX 30 and 31)

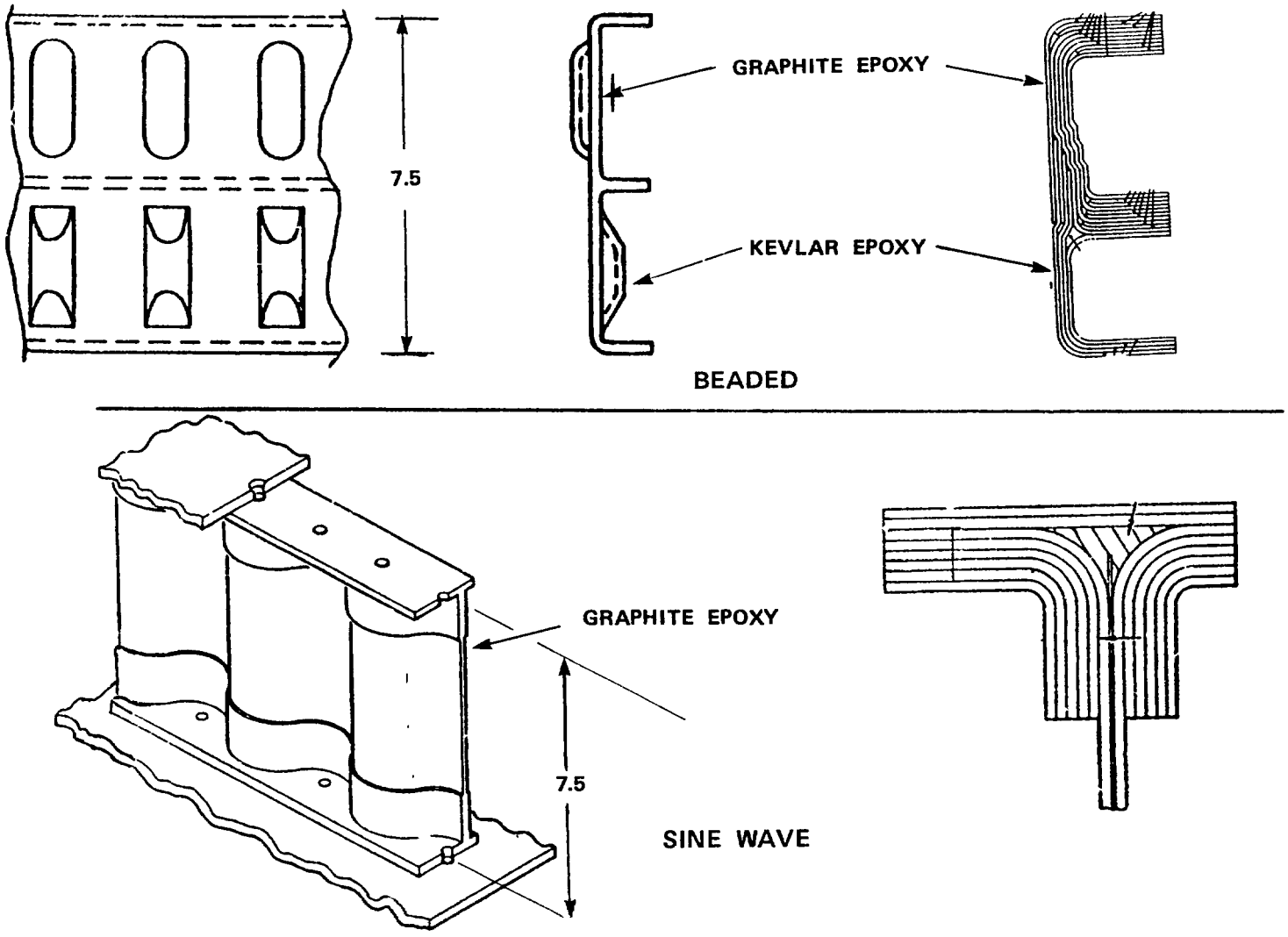

Figure 23. Sketch of Subfloor Structure

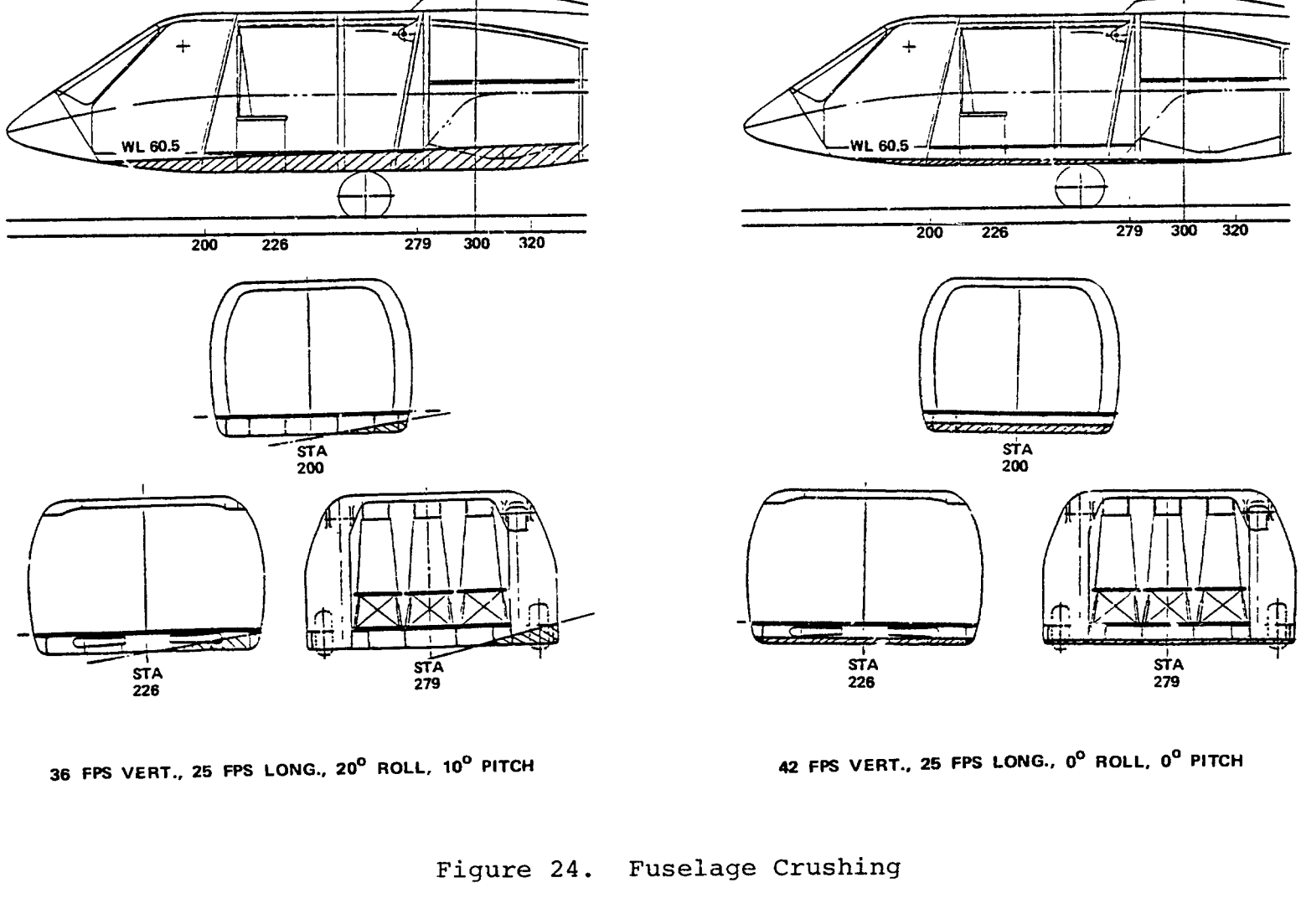

Figure 24. Fuselage Crushing

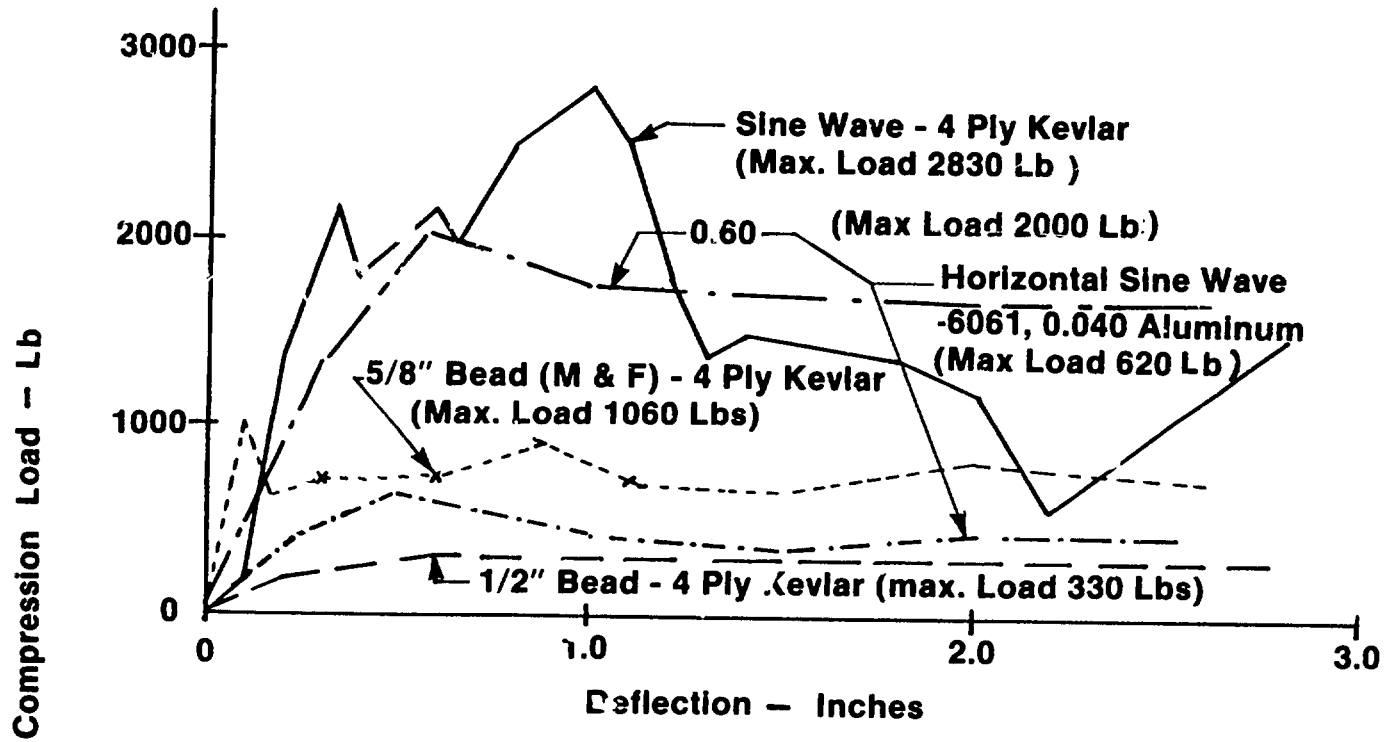

Figure 25. Crushing Energy - Kevlar Members

PRELIMINARY STRUCTURAL WEIGHT ANALYSIS

A preliminary structural analysis was performed early in the study for each of the three baseline landing gear systems. The analysis was performed during the development of the KRASH model to provide model input data and establish baseline weights.

STRUCTURAL LOADS (MAIN GEARS)

The noncrashworthy main landing gear was analyzed for the Main Gear Obstruction Ground Loads shown in Table 4. The shock strut load was 20,083 pounds. Figure 26 presents the results. Maximum bending moment on the drag beam was 460,000 inch-pounds. Figure 27 presents the results and compares the noncrashworthy drag beam with a crashworthy drag beam.

The shock struts and drag beams were sized based on hand calculators. Loads were calculated for the crashworthy components assuming the critical design condition was at 42 fps vertical, 25 fps longitudinal, and 10 degrees roll and pitch. The shock strut load developed was 50,390 pounds. Figures 28 and 29 present the results of those calculations. Maximum bending moment on the drag beam was 887,881 inch-pounds. Figure 27 presents the results.

The KRASH program was run using the data of the preliminary crashworthy landing gear designs. The program developed design data such as ground loads, shock strut loads, shears, and moments in the drag beam, load factors, aircraft attitudes and gear geometry during a crash sequence. Table 13 presents the main gear ground loads, also given in Table 9, and the resulting shock strut loads. It can be shown from Table 13 that the original hand-calculated strut load of 50,390 pounds was within the range of loads obtained by the KRASH analysis. Maximum load was 55,000 pounds, minimum of 47,900 pounds from the KRASH analysis. The loads from the KRASH analysis substantiated the original baseline design of the main gear.

TABLE 13 GROUND LOADS AND STRUT LOADS - MAIN GEAR

KRASH Conditions	Drag Load (+ Aft - Lb)	Side Load (+ Left - Lb)	Vertical Load (+ Up-Lb)	Strut Load (Lb)
LHX11 Velocity Vert. 42 fps Long. 25 fps 0° Roll, 0° Pitch	-16,000.0	-5,000.0	55,000.0	47,900
LHX03 Velocity Vert. 42 fps Long. 25 fps 10° Roll, 10° Pitch	-20,000.0	-15,000.0	60,000.0	48,900
LHX12 Velocity Vert. 42 fps Long. 25 fps 5° Roll, 15° Pitch	-22,000.0	-10,000.0	70,000.0	54,000
LHX13 Velocity Vert. 42 fps Long. 25 fps 10° Roll, -5° Pitch	21,000.0	2,000.0	62,000.0	55,000
		Average Strut Load		51,450

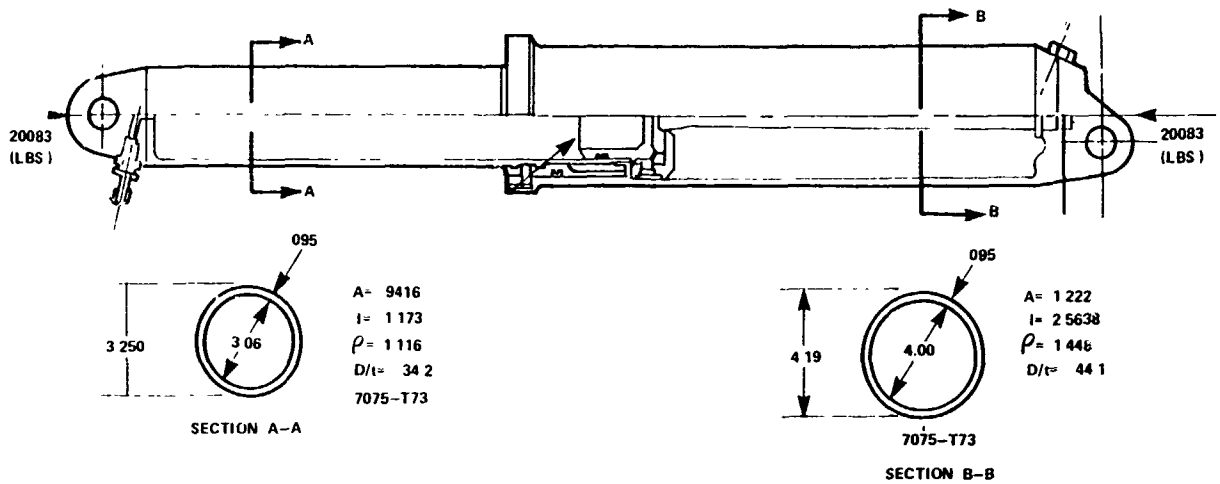

Figure 26. Shock Strut - Noncrashworthy, Kneeling, Retractable Main Landing Gear

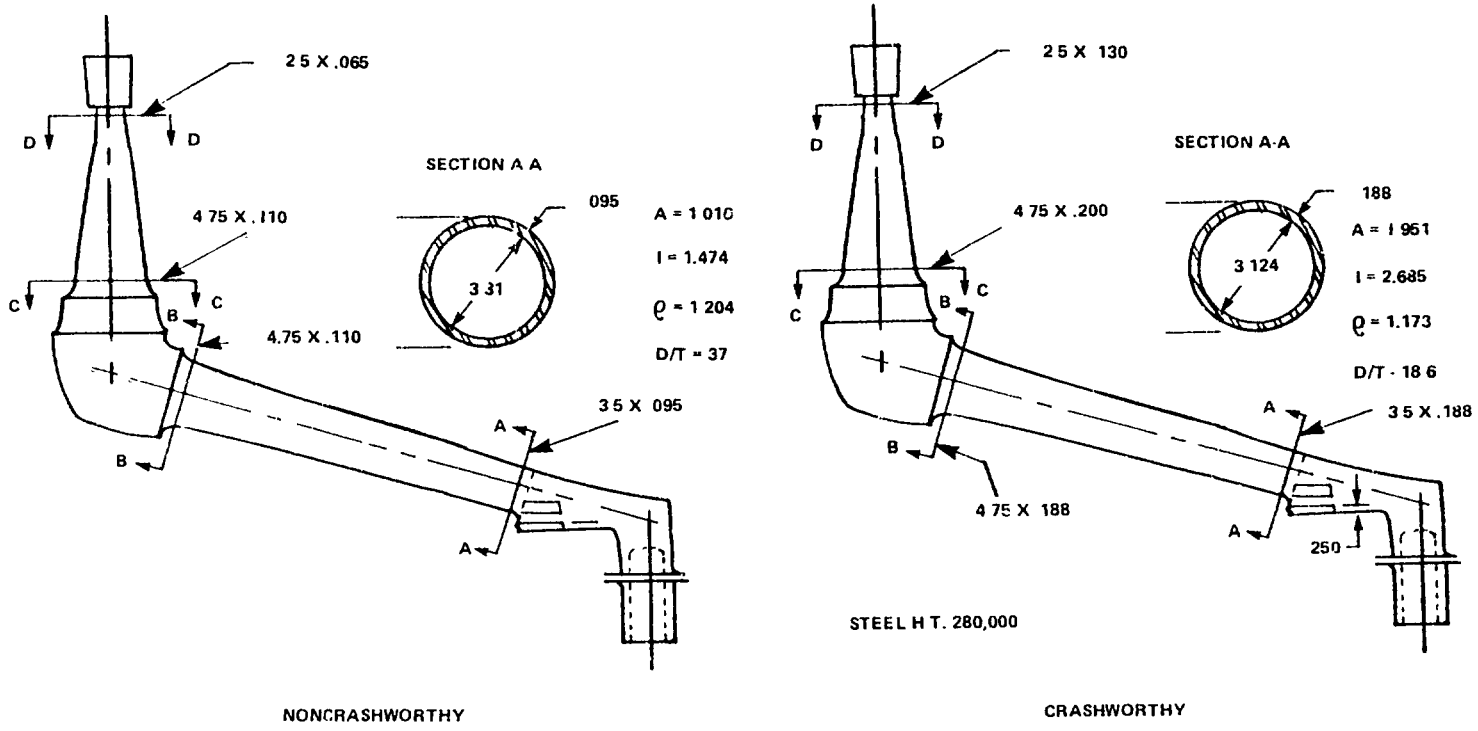

Figure 27. Main Gear Drag Beam

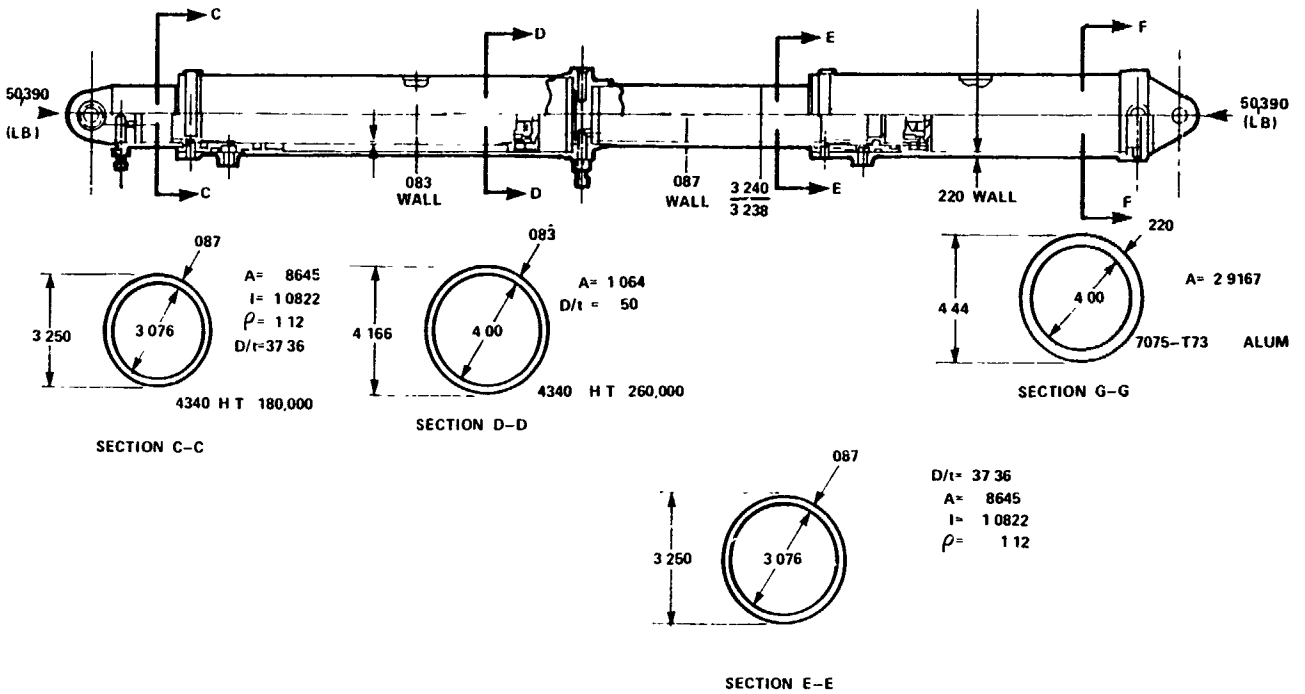

Figure 28. Shock Strut Assembly, Crashworthy, Retractable, Kneeling Main Landing Gear

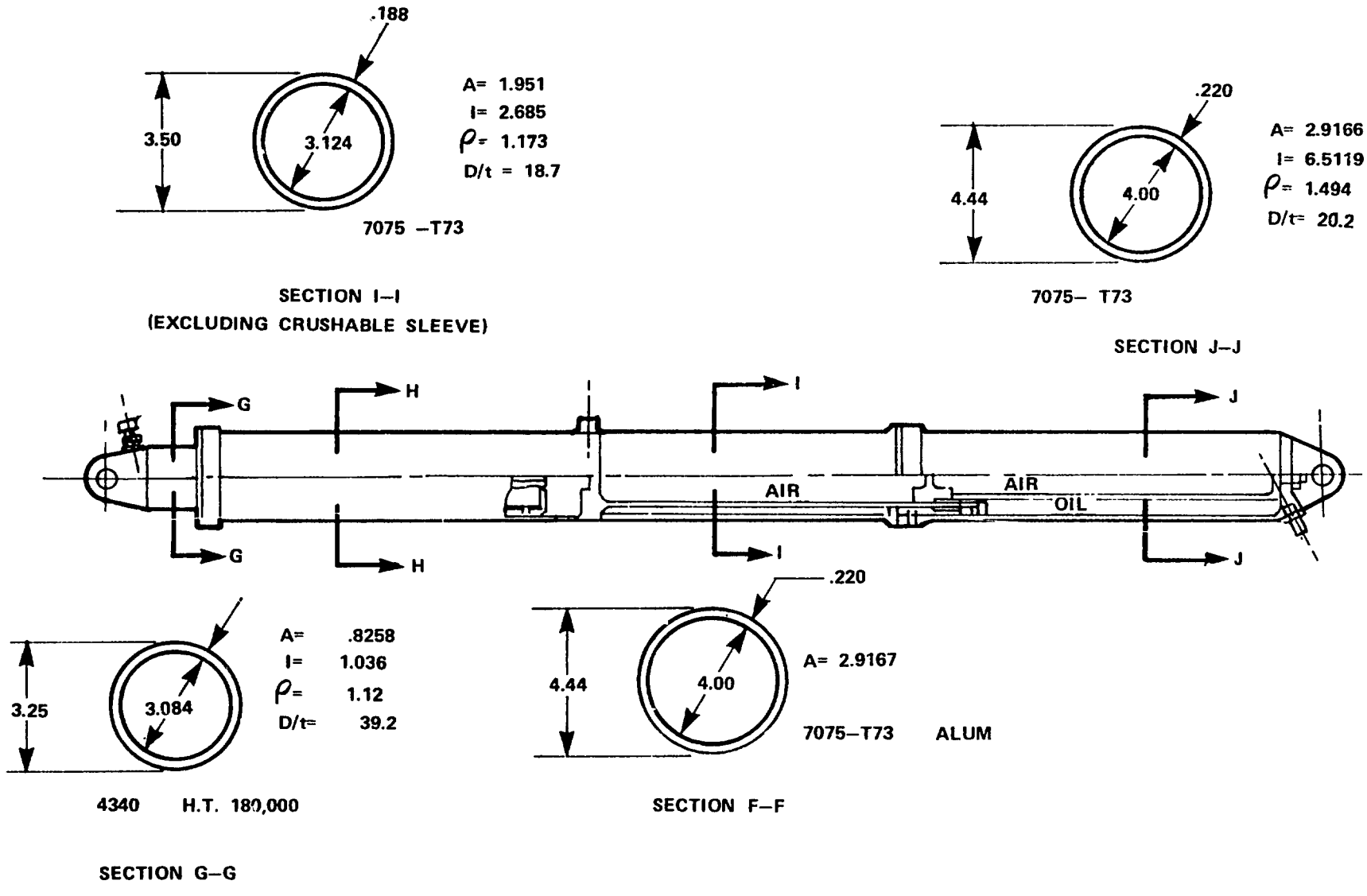

Figure 29. Fixed, Kneeling, Crashworthy Main Gear Strut

TAIL GEAR

The tail gear was analyzed for a level 20-fps sink speed and normal landing conditions. The trunnion cylinder and drag brace were analyzed for the 20-fps crash condition. The axle and piston/fork were analyzed for the normal loads. Figures 30 and 31 present a summary of the tail gear structural analysis.

BASELINE LANDING GEAR WEIGHT

Table 14 summarizes the weights of the components for each baseline landing gear. The weights for wheels, tires and brakes were obtained from catalogs. Weights for the shock struts, axles, drag beam, fittings, hardware and oil were calculated from drawings. Table 15 compares the baseline landing gear weight with the landing gear systems of other Sikorsky helicopter models.

The percentage of gross weight for the landing gear system of the noncrashworthy design compares well with the percentage for a noncrashworthy commercial S-76A design and a noncrashworthy design for the HH-3E military helicopter. The crashworthy designs of this study appear reasonable when compared to the UH-60A. The crashworthy design for the ACAP (S-75A) appears to be out of line. The larger weight for the crashworthy S-75A is in the shock strut and drag beam which is the result of the geometry for a main gear aft of the c.g. and attached to the narrower transition section.

The baseline crashworthy drag strut, shown in Figure 29, was calculated to weigh 76.6 pounds. This weight appeared too heavy when compared to the drag strut of the UH-60A shown in Table 15. A review of the detailed structural analysis of the UH-60A drag strut showed that the strut had been designed for a normal ground obstruction condition. It was then assumed that the wheel, axle, and tire would be destroyed during a crash onto a rigid surface. The crash loads were then applied to the strut at the location of the base of the axle. The result was that the obstruction condition designed the UH-60A drag strut. Based upon the analysis of the UH-60A drag strut, the noncrashworthy drag strut is used for the crashworthy main landing gears.

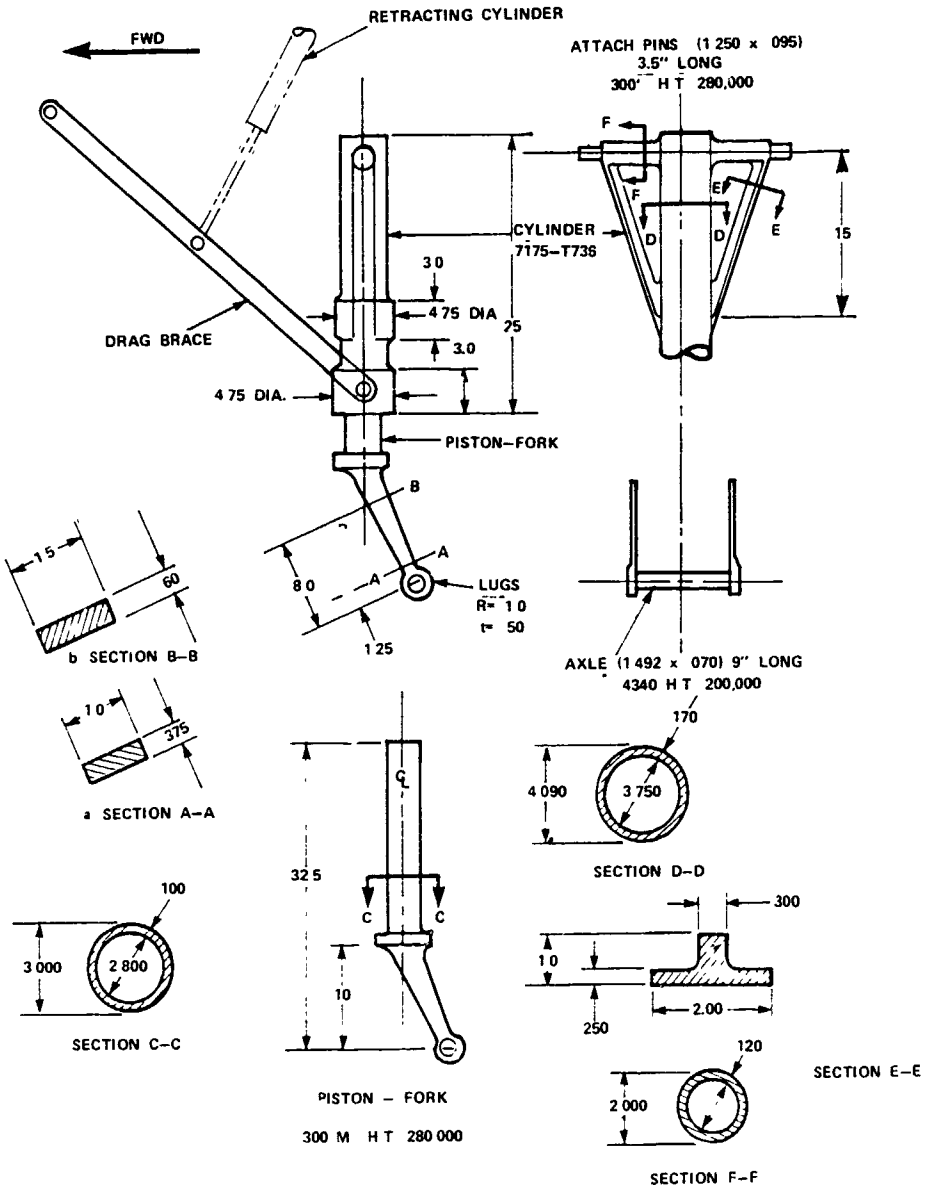

Figure 30. Tail Gear Structure

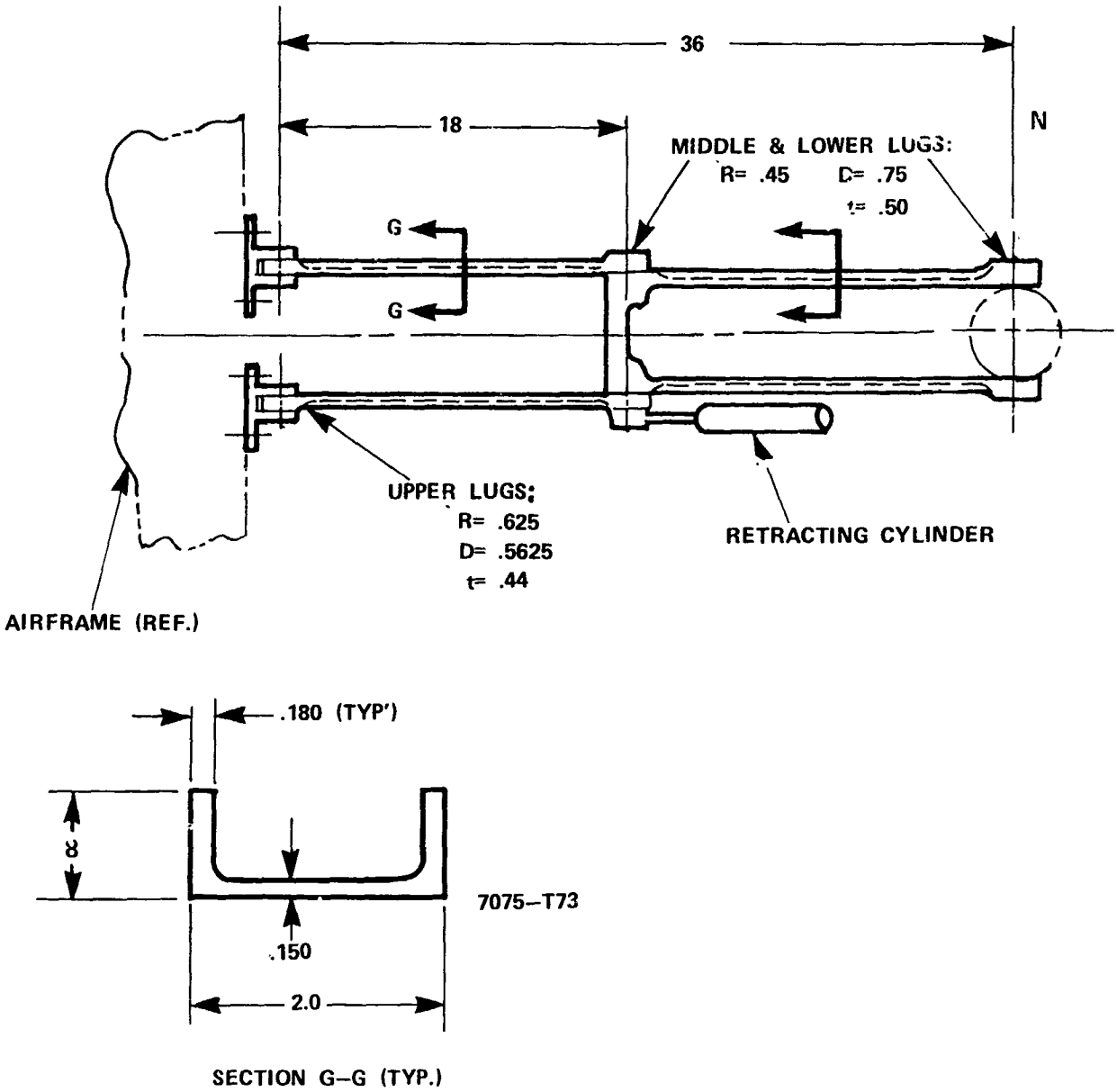

Figure 31. Tail Gear Drag Strut

COMPOSITE LANDING GEAR COMPONENTS

Four landing gear components which appeared to be good candidates for weight savings using composite materials were selected for analysis:

a. Main gear drag beam
b. Oleo extension fitting (noncrashworthy gear)
c. Upper fitting, main gear/fuselage
d. Tail gear drag brace

A preliminary analysis of the main gear drag beams for the three gears resulted in a 16-percent weight savings. A composite drag beam is sketched in Figure 32.

A weight savings of 45 percent was obtained for the oleo extension fitting compared to an aluminum fitting.

A composite upper fitting, which attaches the top of the main gear to the airframe, was estimated to result in a 60-percent weight saving compared to a steel fitting. The weight estimate was based on the bearing strength density ratio (F_{BRU}/ρ) for 125,000 psi heat treat steel and ±45° graphite/epoxy.

A preliminary analysis of a composite tail gear drag brace resulted in a 47% weight savings compared to an aluminum brace.

The lower weight savings for a composite main gear drag beam was the result of providing torsional stiffness to the beam to prevent excessive "scuffing" of the main gear tires.

A graphite/epoxy main gear wheel was considered but was not feasible due to the heating of the wheel during braking. A metal matrix main gear wheel appears feasible, but it is not clear that the technology will have matured sufficiently to be captured by an accelerated LHX acquisition strategy.

Although composite materials appear to reduce the weight of landing gear structures, design problems must be overcome. The design of end caps for pistons and cylinders may require stainless steel caps to be bonded to composite tube members. Provisions for valves threaded into the oleo system must be considered. Possible fiber breakage could cause leakage of the system due to the high pressures in a cylinder. Repeated high impact loads on epoxy matrix materials may result in matrix splitting.

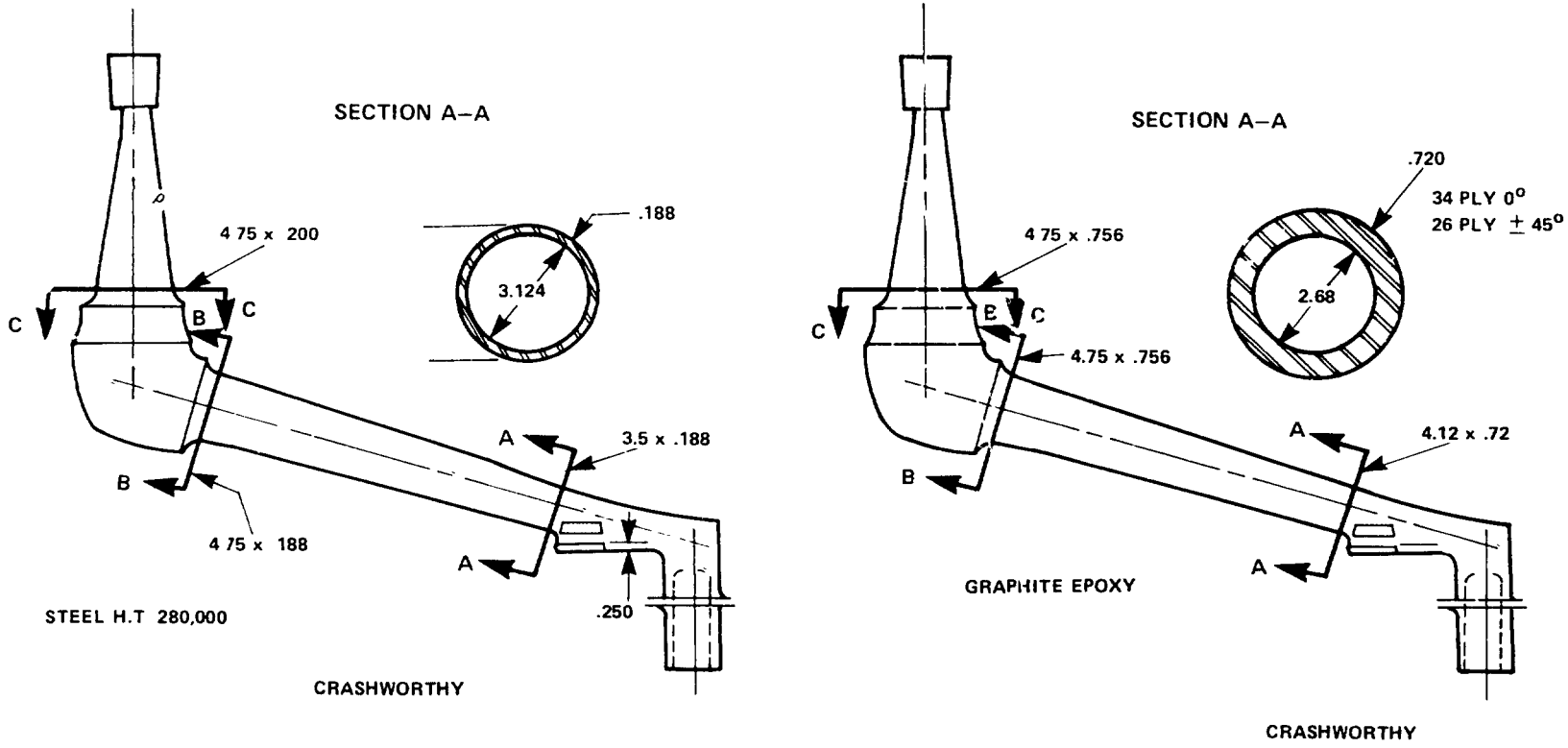

Figure 32. Composite Main Gear Drag Beam Compared to Steel

TABLE 14 LANDING GEAR WEIGHT SUMMARY

	RETRACTABLE/KNEELING/NONCRASHWORTHY				RETRACTABLE/KNEELING/CRASHWORTHY				FIXED/KNEELING/CRASHWORTHY			
	MAIN		TAIL		MAIN		TAIL		MAIN		TAIL	
COMPONENT	METAL	(COMPOSITE)	METAL	(COMPOSITE)	METAL	(COMPOSITE)	METAL	(COMPOSITE)	METAL	(COMPOSITE)	METAL	(COMPOSITE)
Wheels	22 0		5 6		22.0		5.6		22 0		5 6	
Tires	31 0		8 3		31.0		8.3		31 0		8.3	
Brakes	12 0		-	-	12 0		-	-	12.0		-	-
Shock Strut	26 6		22 2		92 9		22.2		99.4		22 2	
Oil	10 0		3 0		20 0		3.0		16.0		3.0	
Axle	3 0		1 4		3 0		1.4		3.0		1.4	
Torque Arm	-	-	1 2		-	-	1.2		-	-	1.2	
Drag Strut	36 2*	(30 7)	5 3	(3 3)	(35 2)	(30 7)	5 3	(3.3)	(36.2)	(30.7)	5 3	(3.3)
Side Strut	-	-	-	-	-	-	-	-	-	-	-	-
Fittings	31.7	(24 7)	10 0	(4 0)	38.5	(30 0)	10.0	(4.0)	38.5	(30.0)	10.0	(4.0)
Hardware	2 1	-	4 2		5.6	-	4.2		5.6		4.2	
Retraction/Kneeling												
Linkage	9 5		-	-	**	-	-	-	-		-	
Electrical	4 7		1.2		4.7		1.2		4 7		1 2	
Hydraulic	14 7		7.8		14.7		7.8		14.7		7 8	
Locking Mech	12 2		1.0		12.2		1.0		-	-	1 0	
Position Ind	1 1		-	-	1.1		-	-	-	-	-	-
Emergency Ext	7 6		0.6		7.6		0.6		-	-	0 6	
Supports	5 2		1 5		5.2		1 5		-	-	1 5	
Brake Operation	15 3		-	-	15.3		-	-	15.3		-	-
TOTAL	244 9	(232 4) Δ=12 5	73.3	(65,3) Δ=8	322.0	(308.0) Δ=14	73 3	(65.3) Δ=8	293 4	(284.4) Δ=14	73.3	(65.3) Δ=8

*Assuming strut used for crash conditions similar to UH-60A

**Internal to the shock strut

TABLE 15. LANDING GEAR WEIGHT COMPARISON

Component	Gear Study: NonCrashworthy Retract*	Gear Study: Crashworthy Retract*	Gear Study: Crashworthy Fixed	UH-60A	S-75A	S-76A*	CH-3C*
Wheel/Brake	78.9	78.9	78 9	118 7	58.8	54.3	178.5
Shock Strut	48.8	115 1	121.6	165.4	212.3	81.4	232.0
Drag Strut	41.5	41.5	41 5	68.0	68.8	20.6	43.6
Fittings	41.7	48.5	48.5	70.7	45 2	25.3	110.4
Other Parts	40.2*	53.7*	49.7	29.9	31.1	14.4*	18.0*
Total	251.1	337.7	340.2	452.7	414.2	196.0	582.5
A/C Gross Wt.	10,000	10,000	10,000	16,825	8,470	10,300	21,419
% G.W	2 5	3.3	3.4	2.7	4.9	1.9	2.7

*Does not include weight of retraction

Component	1 UH-60A	UH-60A - TO - S-75A: D.G.W Ratio	UH-60A - TO - S-75A: Ratioed UH-60A	UH-60A - TO - S-75A: 2 S-75A	UH-60A - TO - LHX Study: D.G.W. Ratio	UH-60A - TO - LHX Study: Ratioed UH-60A	UH-60A - TO - LHX Study: 3 LHX
Wheels/Brakes	118.7	.503	63	59	.594	71	79
Shock Struts	165 4	.503	83	212	.594	98	115-126
Drag (side) Struts	68.0	.503	34	67	.594	41	41.5
Fittings	70.7	.503	36	45	.594	42	48.5

1 = 16,825 lb 2 = 8470 lb 3 = 10,000 lb

Geometry Differences.

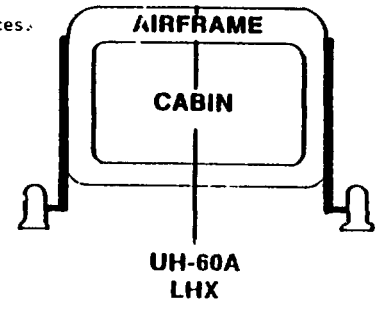

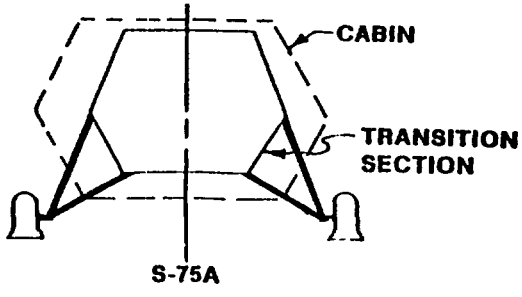

WEIGHT SENSITIVITY ANALYSIS

A preliminary weight sensitivity analysis was conducted to evaluate the effect of various sink rates on the components of a crashworthy system. The system included crashworthy crew/troop seats, crushable fuselage understructure, and the main landing gears. The weights of seats systems, post-crash fire prevention, emergency egress, airframe crashworthiness and main gears were investigated by Sikorsky under a Crashworthiness Design Parameter Sensitivity Analysis study conducted for the Applied Technology Laboratory under contract DAAK 51-79-C-0043. The results of that study were reported in Reference 2. A more detailed analysis was conducted on the main landing gears to evaluate the effect of pitch and roll attitudes.

CRASHWORTHY SYSTEMS

At present, crashworthy seats are designed independent of the landing gear. This is done to provide crew protection should the helicopter, for example, crash into the water. Under the Reference 2 study, weights for crew/troop seats were developed for various levels of crashes up to 42 fps sink rates. Table 16 summarizes the results of that study.

The study of crew/troop seat weights showed very small weight increases when going from 20 fps capabilities to 42 fps capabilities. For the crew seat, the weight was 39 pounds at 20 fps and 42.5 pounds at 42 fps, a change of 3.5 pounds. For the troop seat, the change was 7.75 pounds. At 20 fps, the troop seat was 11 pounds. For the sink rates above 20 fps to 42 fps, the weight remained unchanged at 18.7 pounds. It appears from the study that very small changes in the weight of a crew/troop seat is obtained due to large increases in sink rates. The weight changes are considered insignificant for this landing gear study.

Reference 3 concludes that a properly restrained human can withstand the lateral and longitudinal loads associated with survivable crash pulses. Therefore, no load attenuation is necessary in these directions. Based upon that conclusion, the crew seat can be expected to perform in the crash attitudes specified for the design of the landing gears. Also, since the seat is designed independent of the landing gear, the seat can limit the load on the occupants, with gear retracted, as shown in Figure 33. Crew seat loads and stroking distances were obtained from the KRASH program for crash conditions of 25, 30, and 35 fps, level landings, gear retracted. As seen in Figure 33,

the load on the crew seat is limited to approximately 3,000 pounds for each crash condition. The maximum seat stroke during the crash conditions is 12 inches. The duration of the seat loads are not injurious to the pilot. The peak load factor is approximately 15 g's for a 200-pound occupant.

TABLE 16. CREW SEAT/TROOP SEAT SYSTEM WEIGHT

Crew Seat System Crash Level	I S-76	II SH-3D	III	IV Lamps
Seat Structure	19.8 lb	30.0 lb		33.5 lb
Cushions	7.0 lb	4.0 lb		3.9 lb
Restraint System	3.2 lb	5.2 lb		5.1 lb
Total	30.0 lb	39.2 lb		42.5 lb

Troop Seat System Crash Level	I CH-53 (Troop)	II RH-53 (Crew Chief)	III, IV UH-60A (Troop)
Seat	4.8 lb	10.1 lb	15.55 lb
Restraint System	1.2 lb	.9 lb	3.20 lb
Total	6.0 lb	11.0 lb	18.75 lb

Crash Levels I = 0 - 10.5 fps; II = 10.5 - 21 fps; III = 21 - 31.5 fps; IV = 31.5 - 42 fps.

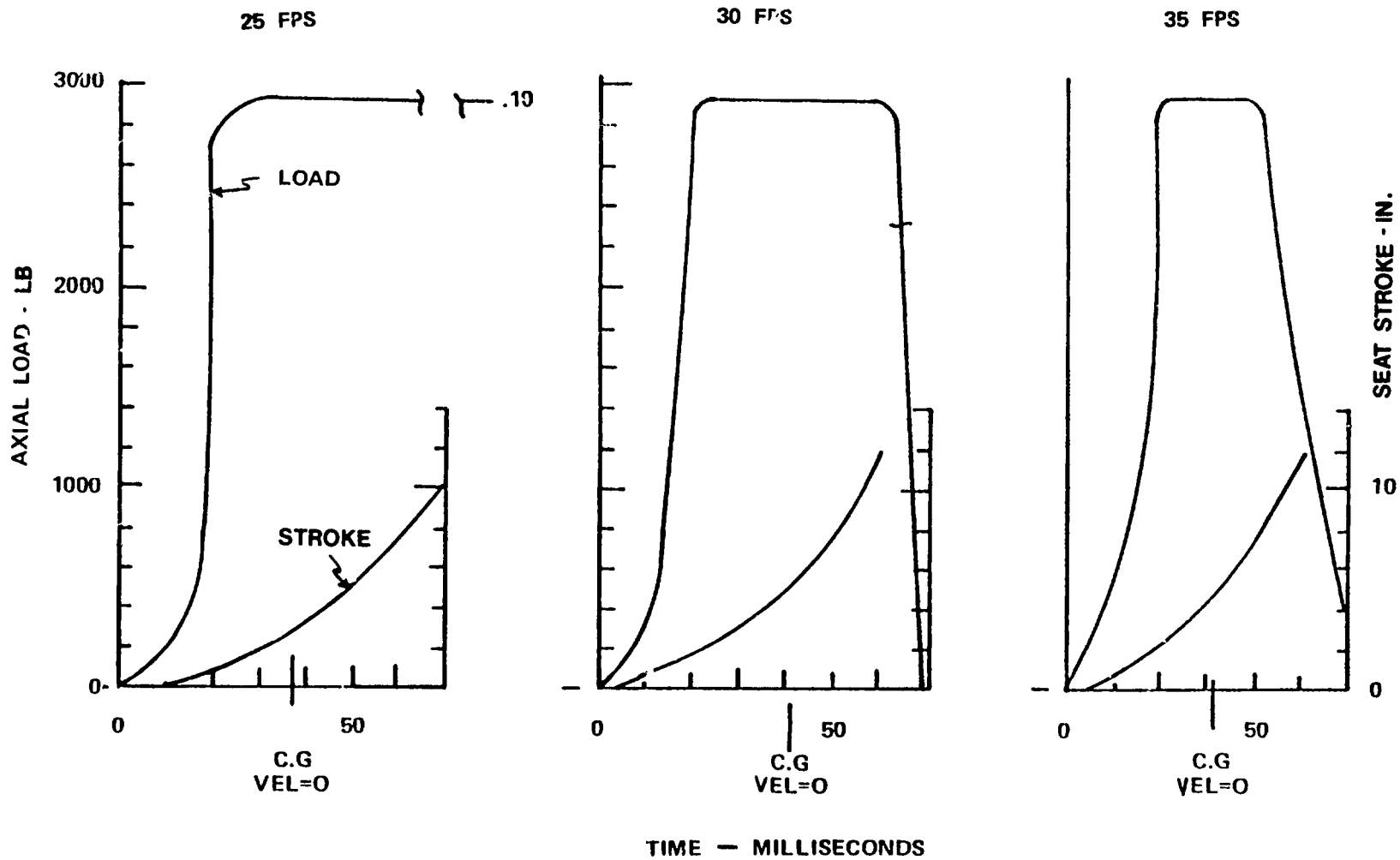

Figure 33. Pilot Seat Vertical Load - Gears Retracted

A crushable fuselage under structure is not required for sink rates at 20 fps or less based on the requirement of this study. Beyond 20 fps, the amount of crushing structure depends on the depth of the structure below the floor and the sink rate. For this study, the depth of the structure below the floor is approximately 7 inches. Three and three-quarter inches are used to provide crushing structure. Four inches are required for primary structure.

The weight of airframe crashworthiness was evaluated in Reference 2. Table 17 summarizes the results. For this study, the weight of the crushable fuselage under structure is considered part of earth plowing and longitudinal impact structure of Table 17. It is estimated that 70 percent of the earth plowing and impact structural weight can be attributed to crushable structure. The aircraft weight of this study and that of Reference 2 are comparable.

The KRASH program evaluated the effects on the airframe for level landings, gear retracted. Figure 35 shows the result of those conditions Figure 35 indicates that the airframe vertical load factors (G) at the pilot's floor, and at the high mass items, exceed the requirements of MIL-1290 (AV) Section 5.1.7.2. The MIL-1290 (AV) requirement is an ultimate vertical load factor of 20 G's (average). Also from Figure 34 it is apparent that there is insufficient depth of crushable structure for level 25, 30, and 36 fps gear retracted crashes. It is noted that the loads on the pilots seat limit the pilot to approximately 15 G's for a 200-pound occupant as shown in Figure 33.

TABLE 17. AIRFRAME WEIGHT

Airframe Crashworthiness

	CRASH LEVEL	I	II	III	IV
1)	High Mass Item Retention	0	10	30	35
2)	High Strength/ Equipment Attach.	0	10	15	15
3)	Earth Plowing Capability	0	5	10	15
4)	Longitudinal Impacts	0	5	10	15
	TOTAL WEIGHT	0	30	70	85

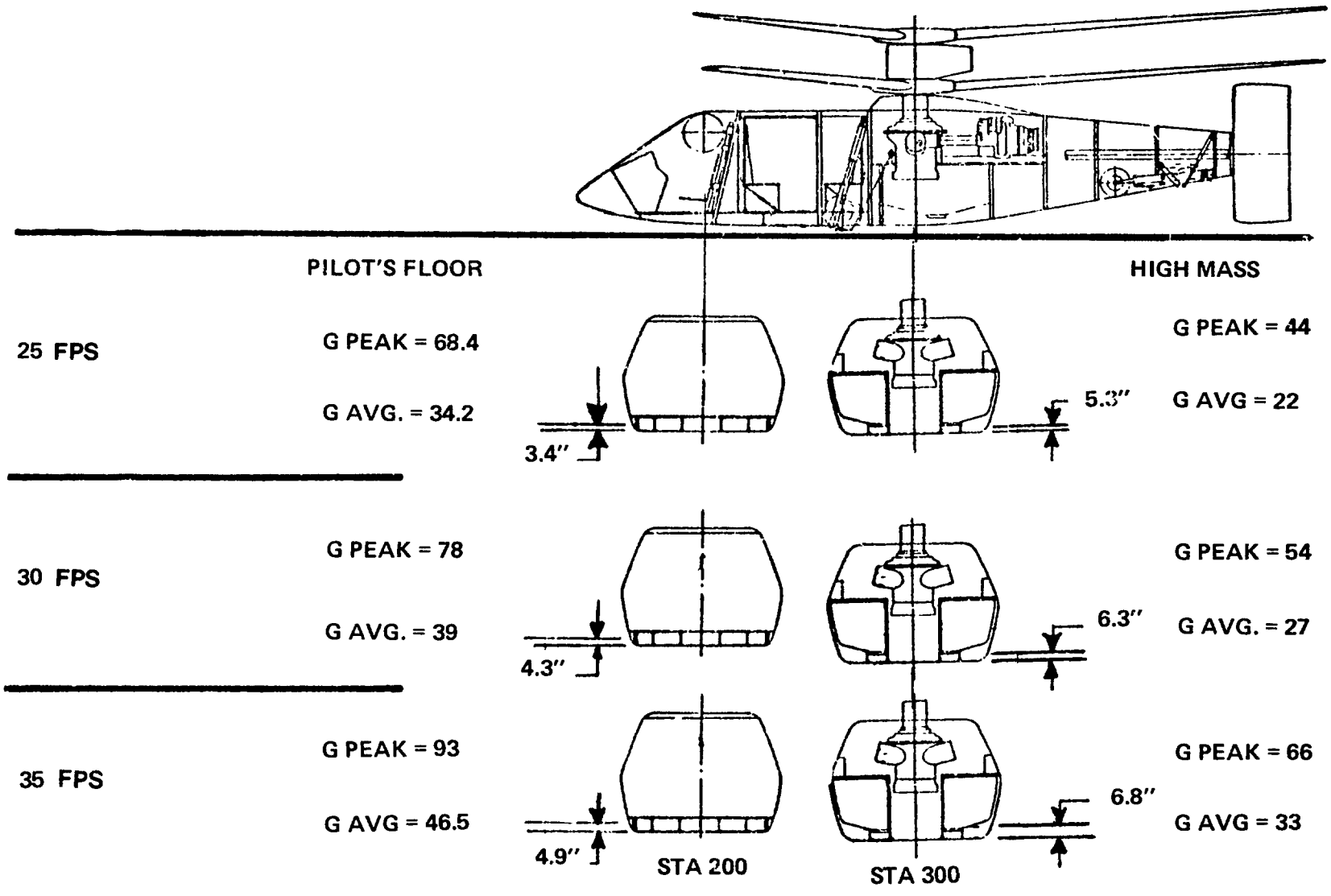

Figure 34. Fuselage Crushing Crash Results - Retracted Gears - Rigid Surface

Vertical load factors for the high mass items (rotor head, transmission, etc.) were developed by the KRASH program for the crash condition with the gears retracted. Figure 35 presents those load factors for a level condition. The 35 foot-per-second sink rate results in a load factor (67 Gs) which is far greater than MIL-STD-1290 (AV) requirements of 40 Gs peak, 20 Gs average . Sink rates greater than 25 feet per second, gear retracted, would result in the high mass items breaking loose during the crash sequence. Load-limiting devices or heavier structure would be required for the higher sink rate with the gear retracted. This requirement is beyond the scope of this study.

A study of crashworthiness effects with the gear retracted must include the fuselage structure for attachment of seats, high mass items, fuel cells, backup structure for the landing gear, and retention of cargo.

Reference 2 also evaluated the weight trends for crashworthy fuel systems and main gearboxes. The results are shown in Figure 36.

12
F

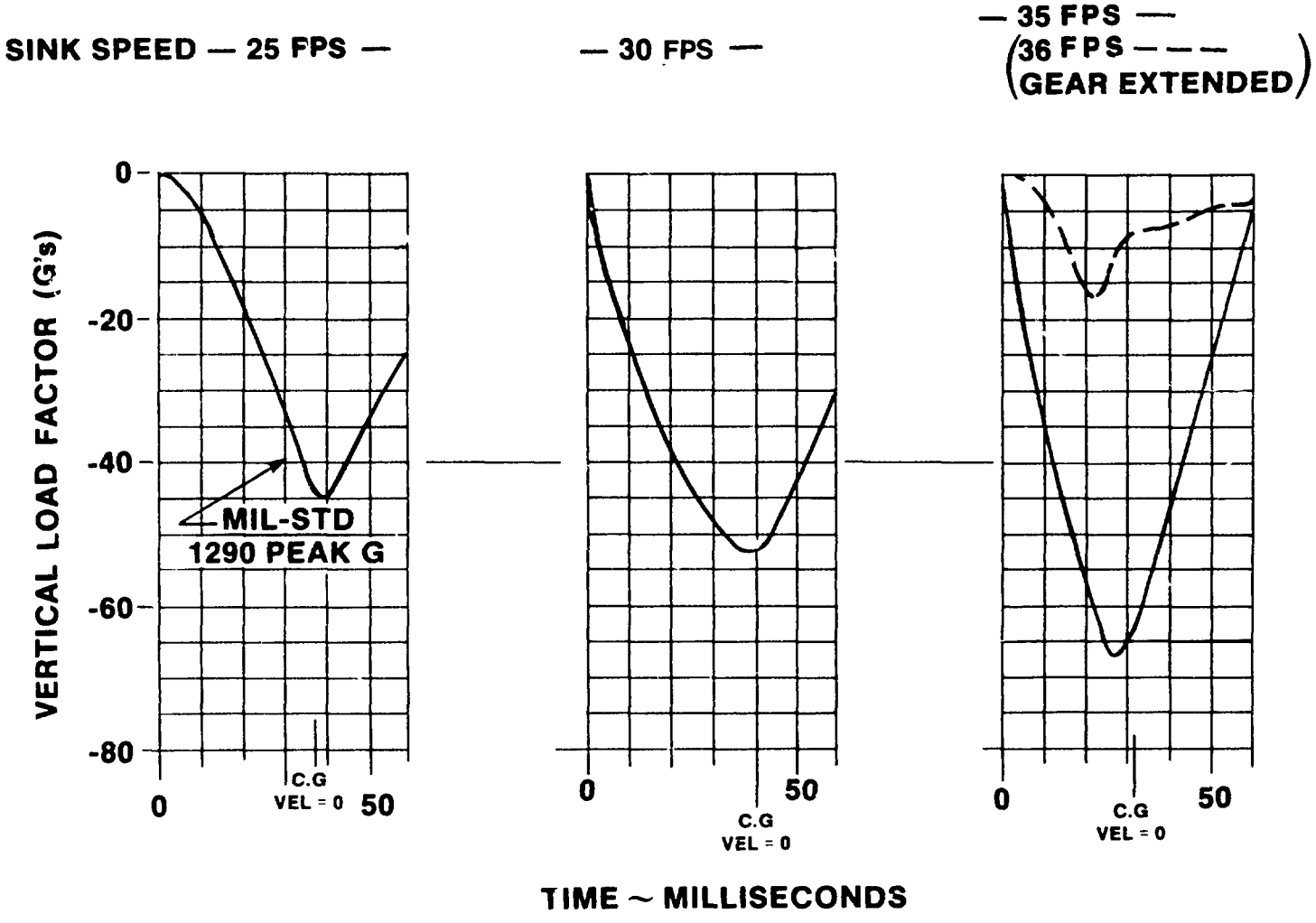

Figure 35. Vertical Load Factors - High Mass Items with Gear Retracted

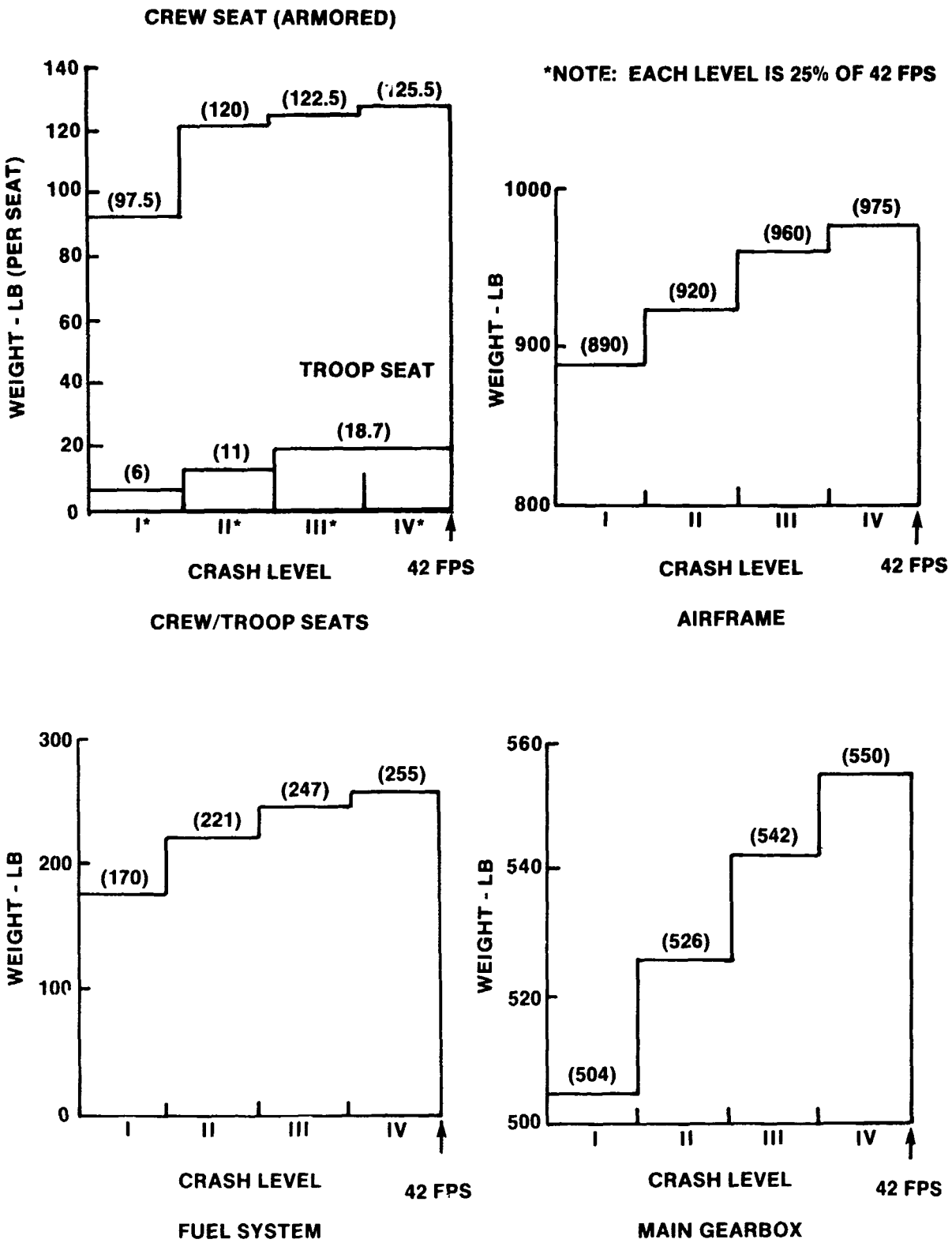

Figure 36. Crashworthy Systems (Reference 2)

Landing gear weights were evaluated in Reference 2 for various sink rates up to 42 fps.

A more detailed weight sensitivity analysis was conducted for this study to evaluate the effect of various sink rates at various angles of pitch and roll on the landing gear shock strut, drag strut, and fuselage fittings. The other components of the landing gear system are not designed by crash load conditions. The KRASH program was run to develop main gear crash loads at 42, 36 and 30 feet per second sink rates at combinations of pitch angles and roll angles given on pages 8 and 9. A pitch angle of -7.5 degrees was also used to determine where the peak loads in the shock strut would occur. The loads on the shock strut were obtained from KRASH for a sink rate of 42 fps and the helicopter pitch and roll angles shown in Table A-1. The loads are plotted in Figure 37 and shown in Table A-1. A peak load was obtained at a nose down pitch angle of 5 degrees and a roll of 15 degrees. Shock strut loads were obtained for sink rates of 36 and 30 fps. Again, maximum loads were at a nose down pitch angle of 5 degrees and a roll of 15 degrees. The weight of the shock strut is determined based on the thickness of the structural load carrying components in the strut. The thickness required to resist the loads imposed are based on the strength allowables for the materials or on machine shop limits.

Figure 37 also presents the bending moment and weight of the drag strut based on the KRASH program. Also shown in Figure 37 is the baseline moment used to design the baseline drag strut. The KRASH program appears to develop the proper loads in the shock strut but overestimates the bending moment of the drag strut. The baseline drag strut was sized based on plastic bending allowables for steel. The bending stiffness of the baseline drag strut was modeled assuming various stiffnesses. It should be noted that the drag strut of the UH-60A is designed by plastic bending. The current KRASH program does not analyze a plastic hinge.

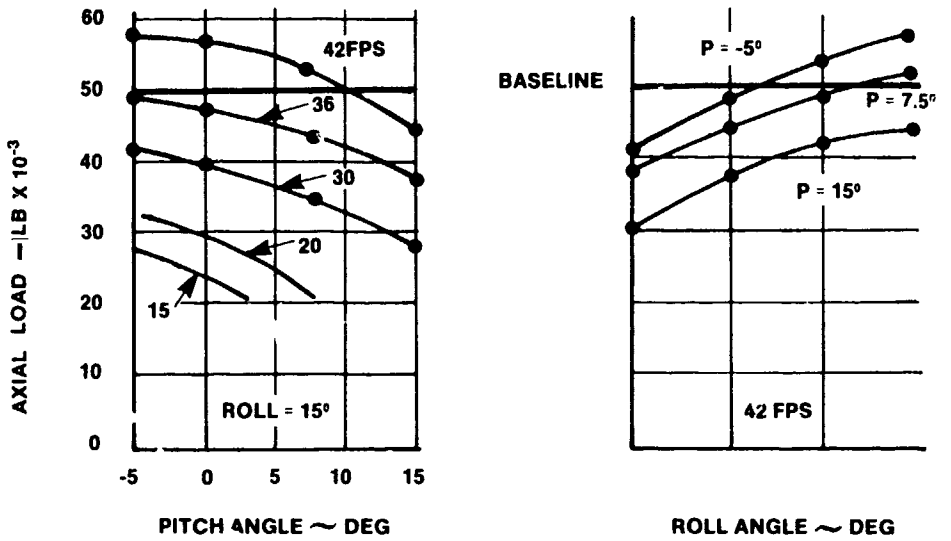

AXIAL LOAD ON SHOCK STRUT VS. PITCH AND ROLL ANGLE FROM KRASH

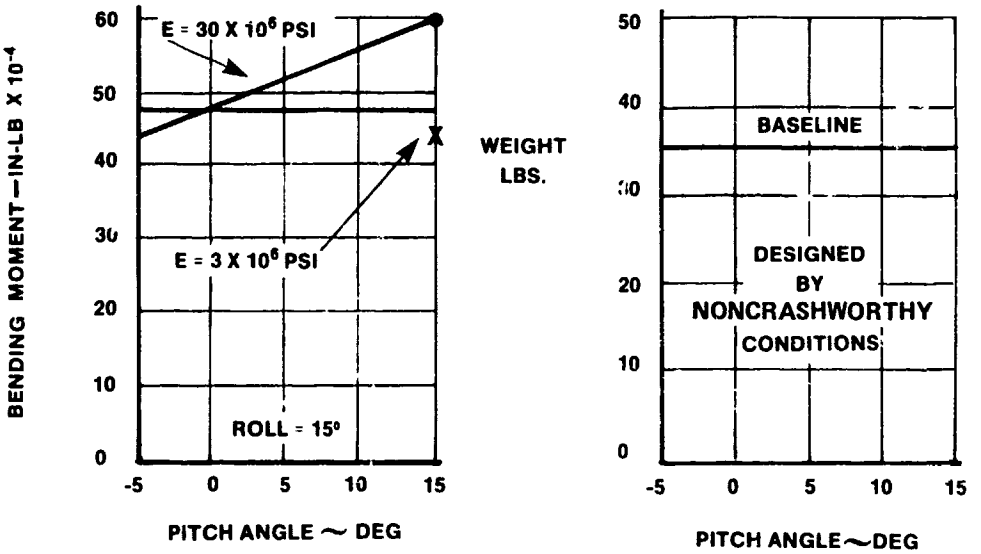

ASSUMES:
PLASTIC BENDING DURING CRASH SEQUENCE; NO FRACTURE
BASELINE DESIGNED FOR GROUND OBSTRUCTION LOAD

Figure 37. Main Gear Component Loads/Drag Beam Weight

COMPONENT WEIGHT

The components of the main landing gear system that are affected by changes in loads are the shock strut and fuselage fittings. Table 18 summarizes the weight of the components in the retractable and fixed shock strut and those components affected by load.

The shock strut is an axially loaded structure; therefore, the weight of the affected components is assumed, in this study, to be proportional to the shock strut loads of Figure 37 and the baseline load of 50,390 pounds. Figure 38 presents the weight of the shock strut as a function of angle.

The weight of the fittings is assumed to be proportional to the shock strut load.

Figure 39 summarizes the fixed landing gear system weight as a function of pitch angle.

A review of the landing gear system weight shown in Figure 39 and Table 13 was performed to determine the factors that cause the changes in weight. From the earlier study (Reference 2), the weight of the landing gear was expressed as

$$WLG = 62.86\left(\frac{DWG}{1000}\right)^{.8} K_{LG}$$

where DWG is the helicopter design gross weight and K_{LG} the landing gear weight factor. For various sink rates, the change in the weight of the landing gear is primarily dependent on the energy that it must absorb; the weight coefficient is expressed by

$$K_{LG} = a + \frac{b\ V^2 LD}{100}$$

where a and b are constants and V_{LD} is the landing gear design sink speed.

The landing gear weight equation is now expressed as

$$WLG = 62.86\left(\frac{DGW}{1000}\right)^{.8} a + 62.86\left(\frac{DGW}{1000}\right)^{.8} \frac{b\ V^2{}_{LD}}{100}$$

The first expression gives the weight of the landing gear components for wheels, tires, brakes and hardware. The constant "a" was found to be 0.6861. The second expression gives the weight of the energy absorbing system and the constant "b" was found to be 0.0139. The weight of wheels, tires, brakes, etc., for this study becomes

$$W = 62.86 \left(\frac{10000}{1000}\right)^{.8} .6861 = 272 \text{ pounds}$$

This agrees closely with the weights shown in Table 13. For example,

Noncrashworthy weight = 244.9+73.3-26.6-22.2 = 269.4 pounds

Crashworthy, retracted weight = 322.0+73.3-92.9-22.2 = 280.2 pounds

Crashworthy, fixed weight = 293.4+73.3-99.4-22.2 = 249.1 pounds

The weight of the energy absorbing system for this study becomes

$$W_E = 62.86 \left(\frac{10000}{1000}\right)^{.8} .0139 \quad 42^2/100 = 97.25 \text{ pounds}$$

This agrees closely with the weight of the shock struts shown in Table 13 for the crashworthy landing gears.

It appears that the weight of the energy-absorbing system in the landing gear is affected more by velocity than by attitude. The maximum load in the shock strut would occur when the shock strut is perpendicular to the ground.

TABLE 18. MAIN GEAR SHOCK STRUT WEIGHT SUMMARY*

	Retractable/Kneeling Crashworthy		Fixed/Kneeling Crashworthy		Retractable/Kneeling Noncrashworthy
	Component Weight	Affected	Component Weight	Affected	Component Weight
Upper Hsg.	6.5	6.5	6.5	6.5	-
Outer Cylinder	18.6	18.6	18.6	18.6	4.3
Upper Inner Cylinder	-	-	2.5	2.5	-
Oleo Piston	11.3	11.3	11.3	11.3	2.8
Sleeve	-	-	3.2	3.2	-
Upper Bearing	0.8	0.8	0.8	0.8	-
Lower Bearing	0.8	0.8	0.8	0.8	0.6
Upper Retract Piston	0.6	-	-	-	-
Lower Retract Piston	0.6	-	0.6	-	-
Upper Floating Piston	0.8	-	0.4	-	-
Lower Floating Piston	0.4	-	0.4	-	0.4
Upper Metering System	1.0	-	-	-	-
Lower Metering System	1.0	-	1.0	-	4.2
Misc.(Valves,Seals,etc.)	3.7	3.7	3.6	3.6	1.0
	46.1	41.1	49.7	47.3	
Strut Unserviced	46.1		49.7		13.3
Oil (MIL-H-5606)	10.0		8.0		5.0
Strut Serviced	56.1		57.7		18.3

*Weight per side

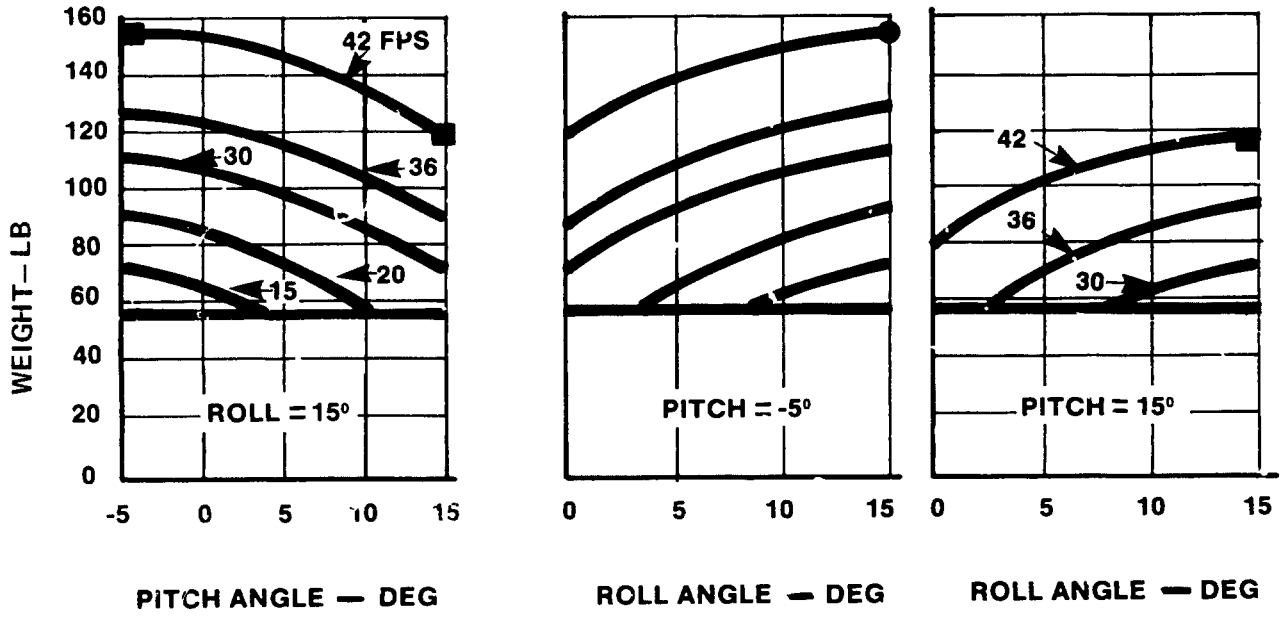

Figure 38. Weight of Affected Structure as a Function of Pitch and Roll Angles

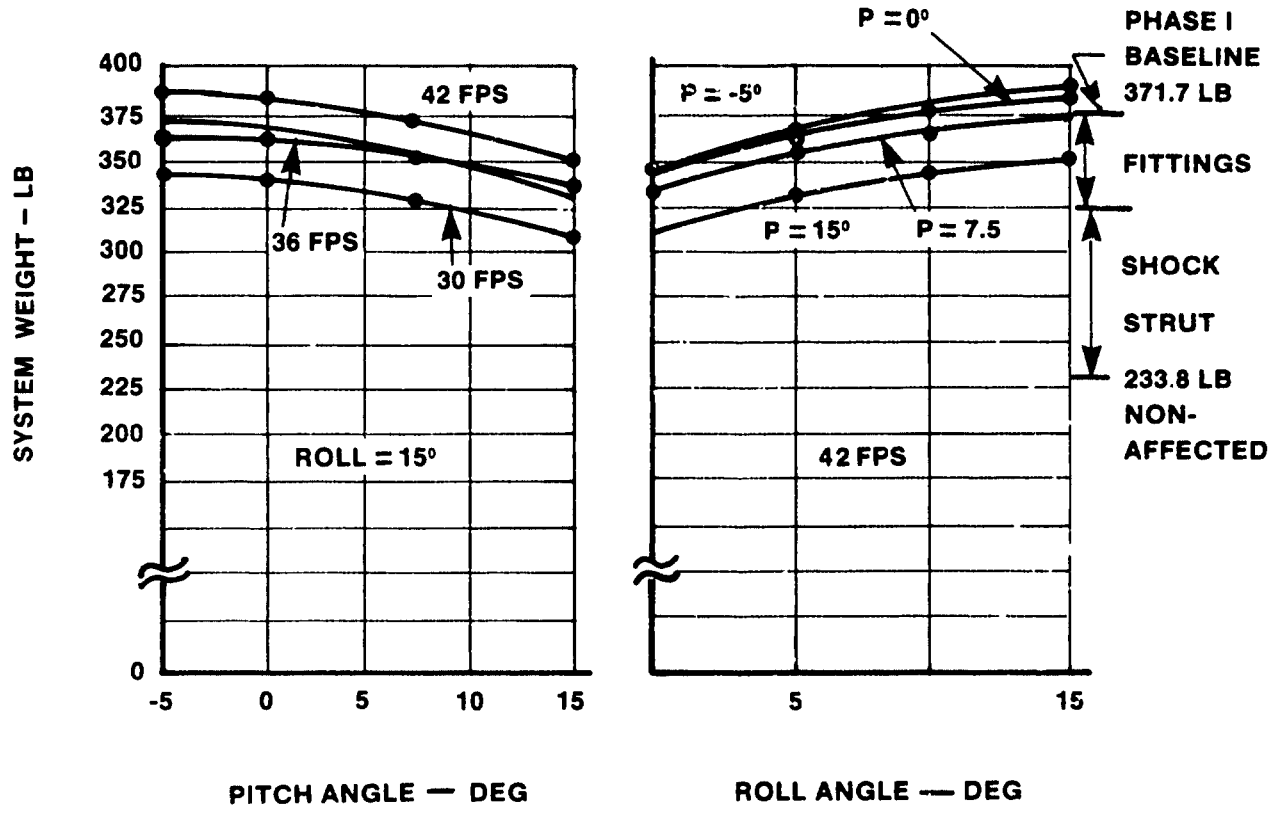

Figure 39. Landing Gear System Weight As A Function of Pitch and Roll Angles

LANDING GEAR SYSTEM COST

The cost of the landing gear system is based on actual cost data of the UH-60A Lot I, fixed landing gear. Table 19 presents the cost of that landing gear. Figure 40 presents the data of Table 19 for the cost as a function of weight.

Figure 41 presents the cost of the fixed landing gear system at 42 fps.

Based on the weight and costs shown in Figures 39 and 41, trending data was developed for the weight and cost as a function of sink rate. The trend data is shown in Figure 42. Also shown in Figure 42 is a comparison of this study and the results of a "CRASHWORTHY DESIGN PARAMETER SENSITIVITY ANALYSIS", conducted in 1980, for the SCOUT helicopter (Reference 2). The SCOUT landing gear system is based on a design gross weight of 8683 pounds. Increasing the landing gear system weight by the ratio of the LHX design gross weight (10,000 pounds) results in a landing gear system weight very close to this study.

The SCOUT landing gear system cost shown in Figure 42 is updated to 1984 dollars assuming an annual inflation rate of 5 percent. The SCOUT cost is increased further by the ratio of design gross weights. The result is a cost which is comparable to this study.

TABLE 19. LANDING GEAR PARAMETRIC STUDY
(FY '84 $, THOUSANDS)

Weight (lb	Cum. Avg. Cost For 1000 Units (Thousands)		$/Lb @ T1000 (Dollars)	
271.2	36.70		$135.3	
296.2	39.63		134.8	
321.2	42.53		132.4	
346.2	45.40	Cost = .2793	131.1	$/lb = 288.67
371.2[1]	48.24	(WGT .8707	130.0	(WG) - .1348
396.2	51.05	r = 1.00	128.8	r = - .006
421.2	53.85		127.8	
446.2	56.62		126.9	
471.2	59.37		126.0	

NOTES:

1 UH-60A Calibration Point (based on UH-60A Lot I Actual Cost Data; 42 fps, fixed gear).

2 Costs represent Labor, Material and Factory Overhead, but no General OH or Fee (1.3 x cost, if desired).

3 FY '84 $, Constant

4 Methodology used: RCA Price System using UH-60A Actual Cost Data.

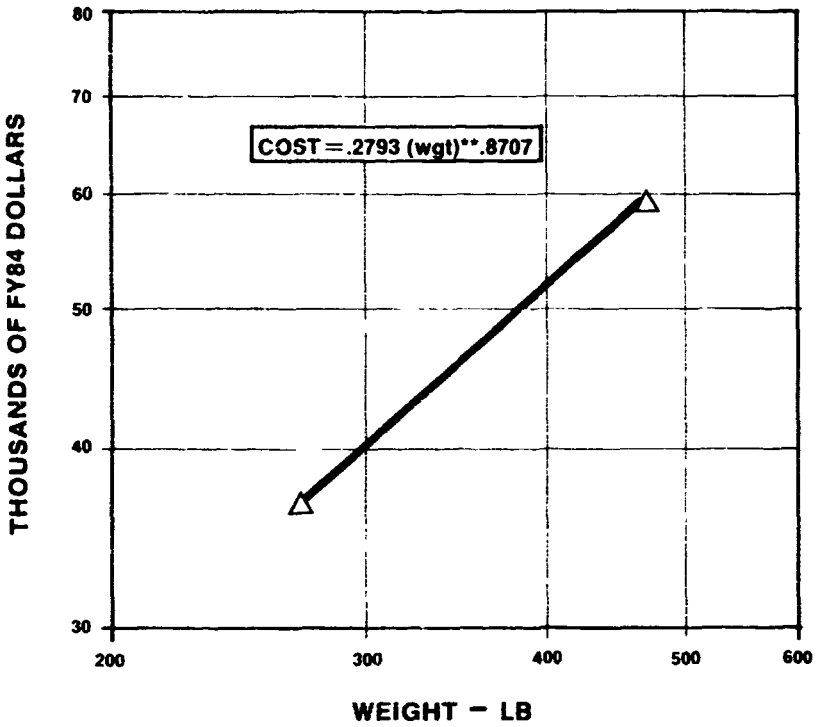

Figure 40. Landing Gear Parametric Cost Study

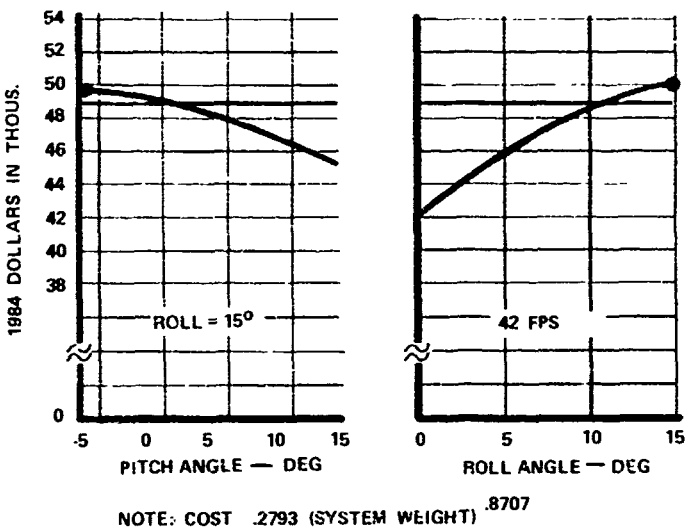

Figure 41. Landing Gear System Cost As Function of Pitch and Roll Angle

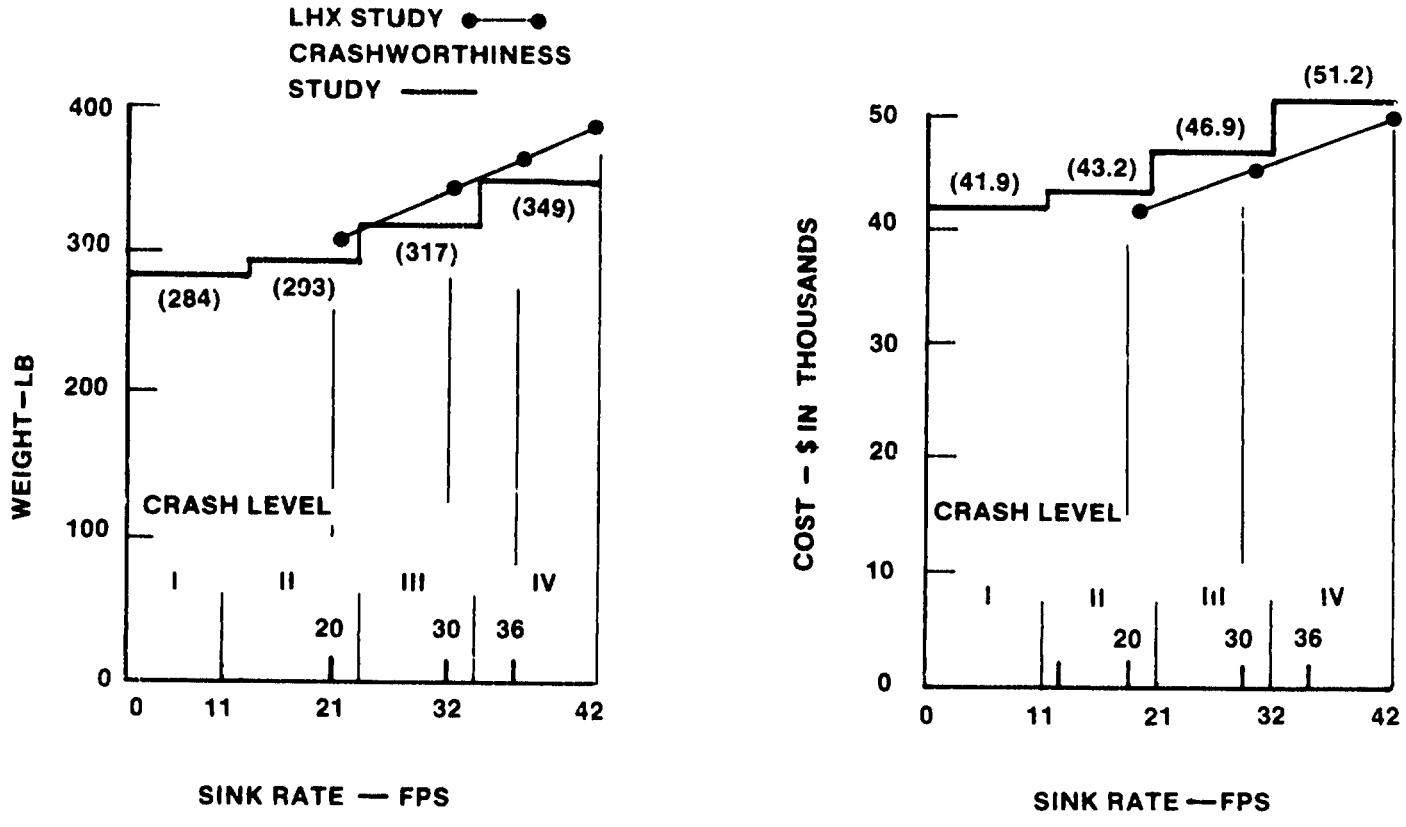

Figure 42. Weight and Cost Trends for Landing Gear System

AERODYNAMIC DRAG

An aerodynamic drag estimate was made for the retractable and fixed/extended landing gear configurations. The power loss due to drag is 7.2%/ft^2. For the extended gears (main and tail) the power loss is 26.6%. Retracted, the loss is 0.7%. The data in terms of square feet of drag area is as follows:

	Landing Gear Type	
	Retracted	Fixed/Extended
Main Gear (both sides)	0.1 ft^2	2.3 ft^2
Tail Gear	_____	1.4 ft^2
Total	0.1 ft^2	3.7 ft^2
Δ Drag (fixed-retracted)		+3.6 ft^2

The drag estimate for the components of the fixed/extended main gear are as follows:

Aerodynamic Drag, main gear components

Shock strut	=	.17 ft^2/side	(15%)
Drag beam	=	.16 ft^2/side	(14%)
Tire	=	.28 ft^2/side	(24%)
Brake and axle	=	.15 ft^2/side	(13%)
Component total	=	.76 ft^2/side	(66%)
Interference drag between shock strut and drag beam	=	.39 ft^2/side	(34%)
Total drag		1.15 ft^2/side	(2.3 ft^2 main gear system)

The percentages of drag of the components in the extended tail gear are similar. The drag estimate for a "clean aircraft" is 11-12 ft^2.

The drag estimates have been based on the following assumptions:

Aircraft weight	8000 to 10,000 lb
Forward velocity	200 knots
Power	1200 HP

The following is noted.

- The main gear tires, brakes, and axles are the same for all gear concepts, therefore the drag values will remain unchanged.

- The outside diameter of the main gear drag beam is not changed for each concept, therefore the aerodynamic drag values will remain unchanged.

- The outside diameter of the lower piston of the shock strut for each main gear concept is not changed, therefore any changes to the wall thickness of cylinders will have a negligible effect on the overall drag of the main gear.

- The interference drag between the shock strut and the drag beam remains constant.

RECOMMENDED DESIGN CRITERIA

Based upon the sensitivity analysis the following design criteria are recommended:

ATTITUDES AND VELOCITIES

A preliminary review of eleven Class A Mishaps with the UH-60 (reference Table 20) indicates that in six of the mishaps the landing gear stroked at pitch angles between 20 degrees nose down and 15 degrees nose up, and roll angles ranged from zero degrees to 15 degrees. Sink rates ranged between 18 fps and 90 fps. Horizontal velocities ranged from zero to 34 fps. However, at a 90-fps sink rate the crew and troop seats stroked; there were three fatalities and no minor or major injuries. At a nose down pitch angle of 20 degrees (V = 20 fps, H = 0), the crew seats stroked; however, the troop seats did not. The result was three major injuries and no fatalities.

Four mishaps resulted from either very high horizontal velocities (152 fps) or upside down impacts (pitched or rolled).

One mishap, at 40 degrees nose up, caused the main gear to partially stroke.

14 F The average sink rate of seven mishaps was 44.4 fps, the average horizontal velocity was 20 fps.

Based on the data of Table 24 and the baseline helicopter studied, the criteria for attitudes and sink rates to develop landing gear loads should be as follows:

- The peak design load in the shock strut occurred at a nose down pitch angle of 5 degrees and a roll of 15 degrees for all crash sink rates studied. It is therefore recommended that the criteria of 5 degrees nose down to 15 degrees nose up be used for crashworthy designs.

- The bending movement in the drag beam, assuming elastic bending, occurred at a pitch angle of 15 degrees and rolled 15 degrees. It is recommended that the criteria for a drag beam include plastic bending for roll angles of 0 to 15 degrees.

- Based on the loads developed for 42 fps sink rates combined with a longitudinal velocity of 25 fps, the criteria of 42 fps vertical and 25 fps longitudinal appear reasonable.

Final LHX helicopter definition will determine the value of added landing gear weight versus applying the weight to other aircraft attributes.

TABLE 20. UH-60A DATA COMPARISON CLASS A MISHAPS (AT MAJOR IMPACT)

	MISHAPS 1	2	3*	4	5*	6	7	8	9*	10*	11
Vertical Velocity (fps)	18	48	30	60	92	40	90	20	5	88	35
Horizontal Velocity (fps)	0	34	6	15	101	78	10	0	152	0	3
Pitch Angle (Deg)	4 dn	6 up	40 dn	15 up	20 dn	40 up	5 dn	20 dn	10 up	180 dn	5 up
Roll Angle (Deg)	5L	8L	135R	0	88L	20R	5L	15R	38R	0	10-15R
Yaw Angle (Deg)	5R	13L	30R	3L	10L	30R	30R	5R	0	90R	5-10L
Landing Gear Stroking	Yes	Yes	No	Yes	No	Part.	Yes	Yes	No	No	Yes
Crew Seat Stroking	No	Yes	No	Yes	No	Yes	Yes	Yes	No	No	Yes
Troop Seat Stroking	No	Yes	No	No	No	One	Yes	No	No	No	No
Fuel Containment	Yes	Yes	Yes	Leak	Leak	No	No	Yes		No	Yes
Postcrash Fire	No	No	No	No	Minor	Minor	Yes	No	No	Yes	No
Helicopter Damage (% Cost)	-	-	-	100	100	100	100	100	100	100	100
Injuries											
Minor or Less	6	-	-	-	-	1	-	-	-	-	2
Major	1	3	-	3	-	5	-	3	1	-	1
Fatalities	-	-	-	-	-	-	3	-	2	4	-
No. of Occupants	7	3	2	4	3	6	3	3	3	4	3

*EXTREME MISHAPS

DETAIL DESIGN CRITERIA FOR THE MAIN LANDING GEAR

The wheel should be assumed to remain attached during the crash sequence. A review of the structural analysis of the UH-60 main gear showed the drag strut to be designed by normal ground conditions (Reference 4). The loads were applied at the ground line with the gear two-thirds extended. For the crash condition it was assumed that the wheel had fractured and the loads were applied where the axle attached to the drag strut. The crash drop test conducted on the UH-60 main gear resulted in half the wheel remaining on the axle (Reference 5) after the wheel rim contacted the test rig platform. The tire should be assumed destroyed.

The drag strut should be designed as a structure in plasic bending during the crash sequence. However, the current KRASH program cannot handle nonlinear behavior of materials. A 20-millisecond time period for peak loads does not appear reasonable based on oscillograph data obtained during the crash drop test of the UH-60 main gear. A 20-millisecond time frame results in vertical reactions far less than expected. Using peak loads at 1 millisecond resulted in a vertical reaction slightly greater than expected. A 3- to 5-millisecond time frame appears reasonable.

The KRASH program appears to provide the proper shock strut loads.

DESIGN UPDATE

The baseline fixed and retracted crashworthy main landing gears were sized based on an axial load, in the shock strut, of 50,390 pounds, and the obstruction loads of Table 4 applied to the drag beam. The preliminary structural analysis for the major components of the shock strut with margins of safety less than 15 percent is discussed below.

SHOCK STRUT STRUCTURAL ANALYSIS

Shock Strut Assembly: (Crashworthy, Kneeling & Retractable Gear) Reference Figure 26.

Cylinder Bore	4.00 Dia.	A= 12.566
Piston O.D.	3.25 Dia.	A = 8.296
		4.270

Upper Piston:

D/t = 37.36
A = .8645
I = 1.0822
ρ = 1.12

Pc = 50,390 lb

$$\text{Press} = \frac{50,390}{8.296} = 6074 \text{ psi}$$

$L^1/\rho = .65.77/1.12 = 59$

Section E-E Fc allow. = 81,000

$$Fc = 50,390/.8645 = 58288 \qquad Rc = \frac{58,288}{81,000} = \underline{.720}$$

$$Fthoop = \frac{6074(3.076)}{2(.087)} = 107,377 \quad Rtn = \frac{107,377}{260,000} = \underline{.413}$$

$$MS = \frac{1}{\sqrt{-.72^2+.413^2-(-.72).413}} - 1 = +.01$$

Shock Strut Assembly: (Crashworthy, Kneeling, Fixed) Reference Figure. 27.

Upper Cylinder:

Pc = 50,390 lb

A = 2.9166
I = 6.5119
p = 1.494
D/t 20.2

Combine axial load with system pressure loading of 4500 psi (ULT).

Section J-J $\qquad L/\rho = \frac{65.77}{1.494} = 44$

$$Fc = \frac{50390}{2.9166} = 17277 \qquad Rc = \frac{17,277}{43,000} = \underline{.402}$$

$$Ftn = \frac{4500(4.0)}{2(.22)} = 40909 \qquad Rtn = \frac{40,909}{61,000} = \underline{.671}$$

$$MS + \frac{1}{\sqrt{-.402^2+.671^2-(-.402).671}} -1 = +.07$$

Table 21 summarizes the margins of safety calculated for the major components of the two baseline crashworthy shock struts. The large margin of safety for the lower cylinder of the retractable gear is the result of combining the cylinder with the steel upper piston. Combining the two components into a one-piece machined structure caused the cylinder to be of minimum wall thickness. The minimum thickness (0.083 inch wall) is required for the cylinder to be concentric. The minimum margin of safety for the drag beam designed to the obstruction loads was 4 percent. The maximum was 9 percent.

Table 21. SHOCK STRUT COMPONENTS - MARGINS OF SAFETY - BASELINE CRASHWORTHY DESIGNS

Crashworthy, Kneeling, Retractable (Ref. Figure 28)		Crashworthy, Kneeling, Fixed (Ref. Figure 29)	
Strut Components	Margin of Safety (Percent)	Strut Components	Margin of Safety (Percent)
Lower Piston (Section C-C) (Steel)	22.0	Lower Piston (Section (G-G)(Steel)	16.0
Lower Cylinder (L-D)	+High*	Lower Cylinder (H-H)	13.0
Upper Piston (E-E Steel)	1.0	Upper Piston (I-I ALUM)	26.0
Upper Cylinder (F-F ALUM)	18.0	Upper Cylinder (J-J ALUM)	7.0
		Sleeve (Alum)(M.S. Based on non-crash)	

*Limited by minimum wall thickness for machining of steel component.
t =.083 inch, O.D. = 4.16 inches, D/t = 50 (Maximum for machining)

OPTIMIZED SHOCK STRUTS - BASELINE AND UPDATED DESIGNS

The following analysis optimizes the baseline shock struts and the shock struts required for the peak load at 42 feet per second -5 deg pitch and 15 deg roll.

Baseline design load	Peak design load
P_{C_B} = 50,390 lb	P_{C_P} = 57,000 lb
Pressure = 6074 psi	Pressure = 6870 psi

Lower Piston

Sections C-C and G-G (Figures 26 and 27)
O-D = 3.250 4340 STEEL, 180,000 psi HEAT TREAT

$I=.908\ in^4.$, $\rho=1.12$, $L\rho=20.0$
Compression stress
$fc=50,390/.718 = 70,181$ psi
$Fc=172,500$ psi $Rc=.406$
Hoop tension
$ft= \frac{6074x3.106}{2 \times .072} = 131,000$ psi

$Ft= 180,000$ $Rt = .727$

$I=1.078\ in^4$, $\rho=1.16$, $L/\rho=18.9$
Compression stress
$fc=57,000/.796 = 71,600$ psi
$Fc=174,000$ psi $Rc=.411$
Hoop tension
$fz= \frac{6870x3.09}{2 \times .080} = 132,676$ psi

$$M.S. = \frac{1}{\sqrt{-.406^2+.727^2-(-.406).727}}-1 = 0.00$$

M.S. = 0.00

Lower cylinders/upper piston - retractable strut, sections D-D and E-E (Reference Figure 26).

The lower cylinder/upper piston is a one-piece steel component. The piston is designed by the strut axial load and an internal pressure. The cylinder is designed by an internal pressure and a resulting tension load on the cross section of the cylinder. The minimum wall thickness for machining a steel cylinder is based on a diameter/thickness ratio, D/t, of 50.

Lower cylinder, section D-D
O.D. = 4.16 in., t = .083 in., A = 1.064 $in.^2$ D/t = 50
Pressure area = 4.27 $in.^2$ 4340 STEEL 260,000 H.T.

Baseline pressure = 6074 psi
P_T = 6074x4.27 = 25,936 lb
Tension stress
ft = 25,936/1.064 = 24,376 psi
Ft = 260,000 Rt = .094
Hoop tension

$$f_{tn} = \frac{6074x4.00}{2 \times .083} = 146,361 \text{ psi}$$

R_{tn} = .56

M.S. is high

Peak pressure = 6870 psi
P_T = 6870x4.27 = 29,334 lb
ft = 29,334/1.064 = 27,570 psi
Ft = 260,000 Rt = .106

$$f_{tn} = \frac{6870x4.00}{2 \times .083} = 165,542 \text{ psi}$$

R_{tn} = .63

M.S. is high

Upper piston - section E-E
O.D. = 3.250 in., 4340 STEEL 260,000 H.T.
Column length L = 65.77 in.

Baseline load,
P_{cB} = 50,390 lb
Pressure 6074 psi

t=.087 in.,A=.865 in,^{2} D/t=37.36
I=1.0822 in^4, ρ=1.12, L/ρ =59
Compression stress
fc=50,390/.865 = 50,280 psi
Fc=81,000 psi Rc = .720
Hoop tension

$$f_{th} = \frac{6074(3.076)}{2 \times .087} = 107,377 \text{ psi}$$

R_{th} = .413

Peak load,
P_{cP} = 57,000 lb
Pressure = 6870 psi

t=.098 in. A=.960 in^2, D/t=33.10
I=1.205 ρ=1.12 L/ρ=59
Compression stress
fc=57,000/.960 = 59,375 psi
Rc = .733
Hoop tension

$$f_{tn} = \frac{6870(3.054)}{2 \times .098} = 107,045$$

R_{tn} = .412

$$M.S. = \frac{1}{\sqrt{-.72^2+.413^2-(-.72).413}} - 1$$

= +0.01

M.S. = +0.00

Lower cylindler/upper piston - fixed strut, sections H-H and I-I (Reference Figure 27)

The lower cylinder/upper piston is a one-piece aluminum component. The piston is designed by the strut axial load as a long column. No pressure is applied inside the piston.

P_{CB} = 50,390 lb

t=.137 in., A=1.447 in^2, D/t=25.5
I=2.04 in^4, p=1.19 L/p = 55.3
$F_{c\ allow}$ = 35,000 psi

f_c = 50,390/1.447 = 34813 psi

M.S. = 0.00

P_{CP} = 57,000 lb

t=.156 in., A=1.638 in^2, D/t=22.4
I=2.29 in^4, p=1.18 L/p = 55.6
$F_{c\ allow}$ = 34,750 psi

f_c = 57,000/1.6 = 34,750 psi

M.S. = 0.00

The lower cylinder (H-H) of the fixed shock strut and the upper cylinders (F-F and J-J) of both struts are of 7075-773 aluminum and are designed by the same axial load and internal pressures.

Lower cylinder, fixed (H-H)
Upper cylinder, fixed (J-J)
Upper cylinder, retracted (F-F)

I.D = 4.00 in. 7075-T73 Aluminum

Baseline load
Pressure = 6074 psi
P_T = 25,936 lb

t=.190 in, A=2.50 in^2
Tension stress
f_t = 25,936/2.50 = 10,374 psi
F_T = 66,000 psi R_T = .157
Hoop tension
$f_{th} = \frac{6074x4}{2x.190}$ = 63,940 psi
F_T = 61,000 psi R_{TH} = 1.04

$$MS = \frac{1}{\sqrt{1.04^2+.157^2-.157(1.04)}} - 1$$

= 0.03

Peak load
Pressure = 6863 psi
P_T = 33,717 lb

t=.210 in, A=2.77 in^2

f_t = 33,717/2.77 = 12,172 psi
R_T = .184

$f_{th} = \frac{6863x4}{2x.21}$ = 65,362 psi
R_{TH} = 1.07

$$MS = \frac{1}{\sqrt{1.07^2+.184^2-.184(1.07)}} - 1$$

= 0.02

The sleeve is designed to crush due to loads that develop from sink rates greater than 20 fps or loads exceeding the maximum load for the noncrashworthy gear shock strut. No change is required. The weight changes for the crashworthy baseline shock struts are shown in Table 22.

TABLE 22. BASELINE SHOCK STRUT WEIGHT REDUCTION FOR MINIMUM MARGINS OF SAFETY

Component	Baseline Shock Strut Wall Thickness (in)	Minimum Margin Of Safety Wall Thickness (in)	ΔWeight (lb)
CRASHWORTHY, RETRACTABLE			
Lower Piston	.087 (Steel)	.072 (Steel)	- .94
Lower Cylinder	.083 (Steel)	.083 (Steel)	No Change
Upper Piston	.087 (Steel)	.087 (Steel)	No change
Upper Cylinder	.220 (Alum.)	.190 (Alum.)	- .92
			-1.86/side
			-3.72 Total
CRASHWORTHY, FIXED			
Lower Piston	.083 (Steel)	.072 (Steel)	- .69
Lower Cylinder	.220 (Alum.)	.190 (Alum.)	- .92
Upper Piston	.188 (Alum.)	.137 (Alum.)	-1.23
Upper Cylinder	.220 (Alum.)	.190 (Alum.)	- .92
			-3.76/side
Sleeve	No Change		-7.52 Total

WEIGHT SUBSTANTIATION

The weights of major components in a shock strut assembly are proportional to the square of the velocities at a fixed gross weight. The lower piston of the noncrashworthy shock strut, for example, is 2.8 pounds (Ref. Table 18). The weight of the retractable and fixed piston is 11.3 pounds (Ref. Tables 18). Therefore, adjusting for the margins of safety of 0,

$$\frac{11.3-.94}{2.8-.29} = 4.1 \quad \text{and } 42^2/20^2 = 4.4$$

The weight of the components in a shock strut assembly at a fixed sink rate and gross weight are directly proportional to the axial load in the shock strut as a result of pitch and roll angles. The weight is a result of changes in the wall thickness of pistons and cylinders as shown in the structural analysis. End caps, floating pistons, seals, lugs and bearings are changed. Table 23 compares the wall thickness of the baseline shock strut components adjusted for zero margins of safety and the updated shock strut. The original assumption that the weight of the shock strut is proportional to the load, used to develop the curves of Figure 38, is substantiated by the data of Table 23.

TABLE 23. SHOCK STRUT COMPONENTS, WALL THICKNESS

	BASELINE (M.S.=0)	UPDATED (M.S.=0)	RATIO UPDATED/BASELINE
Retracted/Fixed			
Lower Pistons	t=.072 in	t=.086 in	1.11
Upper Pistons	t=.087 in	t=.098 in	1.13
Upper Cylinders	t=.190 in	t=.210 in	1.11
Lower Cylinder (Fixed)	t=.137 in	t=.156 in	1.14
Design Load	50,390 lb	57,000 lb	1.13

Table 24 presents the shock strut weights adjusted for zero margins of safety. Tables 25 and 26 present the weights of the shock strut components for the updated landing gears. The weight changes of Tables 24, 25 and 26 are negligible for this preliminary study when compared to the system weight of 380 pounds.

TABLE 24. MAIN GEAR SHOCK STRUT WEIGHT SUMMARY, ADJUSTED WEIGHT*

	Retractable/Kneeling Crashworthy		Fixed/Kneeling Crashworthy	
	Component Weight	Adjusted Weight	Component Weight	Adjusted Weight
Upper Hsg.	6.5	5.5	6.5	5.5
Outer Cylinder	18.6	18.6	18.6	16.5
Upper Inner Cylinders	-	-	2.5	2.5
Oleo Piston	11.3	10.4	11.3	10.6
Sleeve	-	-	3.2	3.2
Upper Bearing	0.8	0.8	0.8	0.8
Lower Bearing	0.8	0.8	0.8	0.8
Upper Retract Piston	0.6	0.6	-	-
Lower Retract Piston	0.6	0.6	0.6	0.6
Upper Floating Piston	0.8	0.8	0.4	0.4
Lower Floating Piston	0.4	0.4	0.4	0.4
Upper Metering System	1.0	1.0	-	-
Lower Metering System	1.0	1.0	1.0	1.0
Misc.(Valves,Seals,etc.)	3.7	3.7	3.6	3.6
	46.1	44.2	49.5	45.9
Strut Unserviced		44.2		45.9
Oil (MIL-H-5606)		10.0		8.0
Strut Serviced		54.2		53.9

*Margin of Safety = 0

TABLE 25. UPDATED LANDING GEAR SHOCK STRUT WEIGHT

	Baseline-Minimum Margin of Safety Wall Thickness (in)	Updated Wall Thickness (in)	ΔWeight (lb)
RETRACTABLE			
Lower Piston	t=.072	t=.080	+ .50
Lower Cylinder/	t=.083	No change	-----
Upper Piston	t=.087	t=.098	+ .74
Upper Cylinder	t=.190	t=.210	+ .91
			2.15/side
			4.3 Total
FIXED			
Lower Piston	t=.072	t=.080	+ .50
Lower Cylinder/	t=.190	t=.210	+ .91
Upper Piston	t=.137	t=.156	+ .48
Upper Cylinder	t=.190	t=.210	+ .91
			2.80/side
			5.6 Total

TABLE 26. UPDATED MAIN GEAR SHOCK STRUT WEIGHT SUMMARY*

	Retractable/Kneeling Crashworthy		Fixed/Kneeling Crashworthy	
	Nonaffected	Affected	Nonaffected	Affected
Upper Hsg.	-	6.4	6.5	6.4
Outer Cylinder	-	18.6	18.6	17.9
Upper Inner Cylinder	-	-	2.5	2.5
Oleo Piston	-	10.9	11.3	11.1
Sleeve	-	-	3.2	3.2
Upper Bearing	-	0.8	-	0.8
Lower Bearing	-	0.8	-	0.8
Upper Retract Piston	0.6	-	-	-
Lower Retract Piston	0.6	-	0.6	-
Upper Floating Piston	0.8	-	0.4	-
Lower Floating Piston	0.4	-	0.4	-
Upper Metering System	1.0	-	-	-
Lower Metering System	1.0	-	1.0	-
Misc. (Valves, Seals, etc.)	-	3.7	-	3.6
		41.2		46.3
Strut Unserviced	45.6		48.7	
Oil (MIL-H-5606)	10.0		8.0	
Strut Serviced	55.6		56.7	

*Margin of Safety = 0

Aerodynamic Drag - Updated Design

There are no changes in the aerodynamic drag characteristics of the updated landing gear designs since the outside diameter of the exposed components remain unchanged.

Fabrication Methods And Processes

Cylinders and pistons are machined from forged aluminum or steel as required. The wheels are of forged aluminum. The drag beam would be fabricated from two steel forgings, welded, and machined to obtain a tapered thickness as required. The cost remains basically unchanged.

RELIABILITY

The landing gear reliability benefits from being designed to stringent crash survivability and ground flotation requirements. The gears are designed for sink speeds up to 10 feet per second with a reserve energy capability of 12.25 feet per second. The main gears and the tail gear are capable of preventing the fuselage from contacting the ground at a 20-foot-per-second sink rate. Both main gears are the articulating type which, because of the drag beam, enables the gear to climb over ground obstacles without becoming overloaded. The long wheel base is ideal for rough terrain operation and provides protection for the fan shroud during flared and tail down landings. The articulated gear eliminates oleo bending loads to provide longer bearing life and reduced friction. The tires were selected to satisfy the most adverse center of gravity and will, therefore, provide extended life under average conditions.

The mission safety and system/total mean time between failures (MTBF) for the landing gears is similar to the UH-60A.

MAINTAINABILITY

The landing gears designed to crash loads is overstrength for normal operations, thus maintenance is reduced. The shock-absorbing wheel landing gears can take high contact loads. They are not as apt to distant or spread, as skid gears do, when high loads are applied. The simplicity of the landing gears permits easy replacement of wheels or brakes. Since the gears are similar to the UH-60A the maintenance man-hour per flight hour is estimated to be 0.035.

CONCLUSIONS

Based upon the study of crashworthy landing gears for a 10,000-pound LHX Utility helicopter, the following conclusions can be made:

1) The vertical impact design condition envelope at 42 feet per second sink rate can be extended from ±10 degrees of roll to ±15 degrees of roll.

2) The maximum load in the shock strut occurs when the helicopter is at a nose down pitch angle of 5 degrees at any sink rate above 20 feet per second.

3) The maximum weight increase is 77 pounds for a retractable crashworthy landing gear, and 48.5 pounds for a fixed crashworthy gear when compared to a retractable non-crashworthy gear. The major weight increase is in the shock strut of both crashworthy gears.

4) The aerodynamic drag of the fixed crashworthy main gear represents a power loss of 26.6 percent compared to 0.7 percent for the retracted crashworthy gear.

5) Crew/troop seats designed independently of the landing gear, when combined with a crushable fuselage under structure, can provide protection for the occupants when the helicopter crashes with the gear retracted. However, the load factor on the high mass items is excessive for sink rates beyond 25 feet per second.

6) The weight increase of a shock strut is more affected by sink rate conditions than pitch and roll angles.

7) The drag beam is sized by normal obstruction load criteria. No increase of the drag beam is required if the beam is allowed to bend plastically during a crash sequence.

8) Composite materials such as graphite/epoxy cannot be used in the main wheels due to high temperatures generated during braking. Broken fibers in a shock strut assembly may cause loss of pressure during normal or crash landings.

RECOMMENDATIONS

The following recommendations are made for further research to improve crashworthiness of LHX helicopters.

1. Evaluate the effect of crash loads on the high mass items and the fuel system. Studies have indicated that the body group and the fuel system are the largest weight drivers for a 10,000-pound class helicopter.

2. Conduct design studies to allow the cockpit/cabin section of the airframe to pivot about a low point in the structure as a section of the upper aft cabin is collapsing due to a nose down crash, gears retracted.

3. Evaluate the effect of repeated high impact loads on composites with epoxy matrix.

REFERENCES

1. Meir, W. H.,"Application Of The Advancing Blade Concept To The LHX Concept Development", Sikorsky Engineering Report SER-510096, April 15, 1983.

2. Lowry, D. W., B.L. Carnell, G. Thomas and M.J. Rich, "CRASHWORTHY DESIGN PARAMETER SENSITIVITY ANALYSIS" SER-510076 (Unpublished), Contract DAAK51-79-C-0043, July 6, 1982.

3. Coltman, J.W., Design And Test Criteria For Increased Energy-Absorbing Seat Effectiveness, USAAVRADCOM TR 82-D-42, Applied Technology Laboratory, U.S. Army Research and Technology Laboratories (AVRADCOM) Fort Eustis, Virginia, 23604, March 1983, AD A128015.

4. Kohler, K., "Structural Analysis of Main Landing Gear", Sikorsky Engineering Report SER-70525, June 15, 1983.

5. Young, B., "Landing Gear, Main and Tail, Qualification Test Report" Sikorsky Engineering Report, SER-70174, November 1978.

APPENDIX
WEIGHT SENSIVITY AND KRASH ANALYSES

Tables A-1 through A-6 of this appendix present the weight sensitivity analysis for the crashworthy landing gear systems at three sink rates and sixteen pitch/roll conditions.

Tables A-7 through A-13 present the input data for the KRASH computer analysis. This data is provided as reference data only.

TABLE A-1. WEIGHT SENSITIVITY - SHOCK STRUTS AND FITTINGS - FIXED GEAR

Sink Speed 42 FPS — Unaffected Weight* = (293.9 + 73.3)(1) -2 (47.3)(2) - 38.5(3) = 233.6 Lb

Pitch Angle (Deg)	Roll Angle (Deg)	Axial Load(4) (Lb)	Δ Weight Shock Struts (Lb)	Δ Weight Fittings (Lb)	Unaffected Weight (Lb)	Landing Gear System Weight (Lb)
-5	0	42500	-14.9	-6.0	233.6	345.8
	5	48500	- 3.6	-1.4	233.6	361.7
	10	53000	+ 4.9	+1.9	233.6	373.5
	15	57500	+13.5	+5.4	233.6	385.4 (Max.)
0	0	42650	-16.5	-6.7	233.6	343.5
	5	47530	- 5.4	-2.2	233.6	359.1
	10	51940	+ 2.9	+1.2	233.6	370.8
	15	56500	+11.6	+4.6	233.6	382.9
7.5	0	39100	-21.4	-8.6	233.6	336.7
	5	44620	-10.9	-4.4	233.6	351.4
	10	48760	- 3.1	-1.2	233.6	362.4
	15	53000	4.9	+1.9	233.6	373.5
15	0	31500	-35.8	-14.4	233.6	316.5 (Min.)
	5	37500	-24.5	- 9.8	233.6	332.4
	10	42000	-15.9	- 6.4	233.6	344.4
	15	45000	-10.2	- 4.1	233.6	352.4

*Baseline Weights

(1) Landing Gear System, Ref. Table 21

(2) Shock Strut Affected Weight, Ref. Table 23

(3) Fittings, Ref. Table 21

(4) Baseline Load = 50,390 lb (Ref. Pg. 64)

TABLE A-2. WEIGHT SENSITIVITY - SHOCK STRUTS AND FITTINGS - FIXED GEAR

Sink Speed 36 FPS — Unaffected Weight* = (293.4 + 73.3)(1) -2 (47.3)(2) - 38.5(3) = 233.6 Lb

Pitch Angle (Deg)	Roll Angle (Deg)	Axial Load(4) (Lb)	Δ Weight Shock Struts (Lb)	Δ Weight Fittings (Lb)	Unaffected Weight (Lb)	Landing Gear System Weight (Lb)
-5	0	35700	-27.7	-11.2	233.6	327.8
	5	40740	-18.2	- 7.3	233.6	341.2
	10	44520	-11.4	- 4.6	233.6	350.7
	15	49000	- 2.9	- 1.2	233.6	362.6
0	0	33915	-33.5	-12.7	233.6	320.5
	5	38700	-22.0	- 8.9	233.6	335.8
	10	42250	-15.3	- 6.2	233.6	345.2
	15	46500	- 7.6	- 3.1	233.6	356.0
7.5	0	32490	-34.4	-13.7	233.6	318.6
	5	37070	-24.9	-10.0	233.6	331.8
	10	40510	-19.1	- 7.7	233.6	339.9
	15	44500	-11.5	- 4.6	233.6	350.6
15	0	27490	-43.0	-17.3	233.6	306.4
	5	31370	-36.3	-14.6	233.6	315.8
	10	34280	-30.6	-12.3	233.6	323.8
	15	37750	-23.[illegible]	- 9.6	233.6	333.2

*Baseline Weights

(1) Landing Gear System, Ref. Table 21

(2) Shock Strut Affected Weight, Ref. Table 23

(3) Fittings, Ref. Table 21

(4) Baseline Load = 50,390 Lb (Ref. Pg. 64)

TABLE A-3. WEIGHT SENSITIVITY - SHOCK STRUTS AND FITTINGS - FIXED GEAR

Sink Speed 30 FPS — Unaffected Weight* = (293.7 + 73.3)(1) -2 (47.3)(2) - 38.5(3) = 233.6 Lb

Pitch Angle (Deg)	Roll Angle (Deg)	Axial Load(4) (Lb)	Δ Weight Shock Struts (Lb)	Δ Weight Fittings (Lb)	Unaffected Weight (Lb)	Landing Gear System Weight (Lb)
-5	0	30300	-37.8	-15.4	233.6	313.5
	5	34580	-29.3	-11.9	233.6	325.5
	10	37790	-23.7	- 9.6	233.6	333.4
	15	41000	-18.0	- 7.3	233.6	341.4
0	0	28740	-39.7	-16.2	233.6	310.8
	5	32800	-33.1	-13.5	233.6	320.1
	10	35840	-27.4	-11.2	233.6	328.1
	15	39000	-21.8	- 9.6	233.6	335.3
7.5	0	25800	-46.3	-18.8	233.6	301.6
	5	29450	-39.7	-16.2	233.6	310.8
	10	32180	-34.1	-13.9	233.6	318.7
	15	35000	-29.3	-11.9	233.6	325.5
15	0	(20083)	-56.9	-23.1	233.6	286.7
	5	23250	-51.0	-20.8	233.6	294.9
	10	26040	-45.4	-18.5	233.6	302.8
	15	28000	-41.6	-16.9	233.6	308.2

*Baseline Weights

(1) Landing Gear System, Ref. Table 21

(2) Shock Strut Affected Weight, Ref. Table 23

(3) Fittings, Ref. Table 21

(4) Baseline Load = 50,390 Lb (Ref. Pg. 64) (Obstruct. Load, Ref. Fig. 26)

TABLE A-4. WEIGHT SENSITIVITY - SHOCK STRUTS AND FITTINGS - RETRACTABLE GEAR

Sink Speed 42 FPS — Unaffected Weight* = (322.0 + 73.3)(1) -2 (41.1)(2) - 38.5(3) = 274.6 Lb

Pitch Angle (Deg)	Roll Angle (Deg)	Axial Load(4) (Lb)	Δ Weight Shock Struts (Lb)	Δ Weight Fittings (Lb)	Unaffected Weight (Lb)	Landing Gear System Weight (Lb)
-5	0	42500	-12.9	-6.0	274.6	376.4
	5	48500	- 3.1	-1.4	274.6	390.8
	10	53000	+ 4.3	+1.9	274.6	401.5
	15	57500	+11.7	+5.4	274.6	412.4 (Max.)
0	0	42650	-14.3	-6.7	274.6	374.3
	5	47530	- 4.7	-2.2	274.6	388.4
	10	51940	+ 2.5	+1.2	274.6	399.0
	15	56500	+10.0	+4.6	274.6	410.0
7.5	0	39100	-18.6	-8.6	274.6	368.1
	5	44620	- 9.5	-4.4	274.6	381.4
	10	48760	- 2.7	-1.2	274.6	391.4
	15	53000	+ 4.3	+1.9	274.6	401.5
15	0	31500	-31.1	-14.4	274.6	349.8 (Min.)
	5	37500	-21.3	- 9.8	274.6	364.2
	10	42000	-13.8	- 6.4	274.6	375.1
	15	45000	- 8.9	- 4.1	274.6	382.3

*Baseline Weights

(1) Landing Gear System, Ref. Table 21

(2) Shock Strut Affected Weight, Ref. Table 23

(3) Fittings, Ref. Table 21

(4) Baseline Load = 50,390 Lb (Ref. Pg. 63)

TABLE A-5. WEIGHT SENSITIVITY - SHOCK STRUTS AND FITTINGS - RETRACTABLE GEAR

Sink Speed 36 FPS — Unaffected Weight* = (322.0 + 73.3)(1) -2 (41.1)(2) - 38.5(3) = 274.6 Lb

Pitch Angle (Deg)	Roll Angle (Deg)	Axial Load(4) (Lb)	Δ Weight Shock Struts (Lb)	Δ Weight Fittings (Lb)	Unaffected Weight (Lb)	Landing Gear System Weight (Lb)
-5	0	35700	-24.1	-11.2	274.6	360.0
	5	40740	-15.8	- 7.3	274.6	372.2
	10	44520	- 9.9	- 4.6	274.6	380.8
	15	49000	- 2.5	- 1.2	274.6	391.6
0	0	33915	-29.1	-12.7	274.6	353.5
	5	38700	-19.1	- 8.9	274.6	367.3
	10	42250	-13.3	- 6.2	274.6	375.8
	15	46500	- 6.6	- 3.1	274.6	385.6
7.5	0	32490	-29.9	-13.7	274.6	351.7
	5	37070	-21.6	-10.0	274.6	363.7
	10	40510	-16.6	- 7.7	274.6	371.0
	15	44500	-10.0	- 4.6	274.6	380.7
15	0	27490	-37.4	-17.3	274.6	340.6
	5	31370	-31.5	-14.6	274.6	349.2
	10	34280	-26.6	-12.3	274.6	356.4
	15	37750	-20.8	- 9.6	274.6	364.9

*Baseline Weights

(1) Landing Gear System, Ref. Table 21

(2) Shock Strut Affected Weight, Ref. Table 23

(3) Fittings, Ref. Table 21

(4) Baseline Load = 50,390 Lb (Ref. Pg. 63)

TABLE A-6. WEIGHT SENSITIVITY - SHOCK STRUTS AND FITTINGS - RETRACTABLE GEAR

Sink Speed 30 FPS			Unaffected Weight* = (322.0 + 73.3)(1) -2 (41.1)(2) - 38.5(3) = 274.6 Lb			
Pitch Angle (Deg)	Roll Angle (Deg)	Axial Load(4) (Lb)	Δ Weight Shock Struts (Lb)	Δ Weight Fittings (Lb)	Unaffected Weight (Lb)	Landing Gear System Weight (Lb)
-5	0	30300	-32.8	-15.4	274.6	347.1
	5	34580	-25.5	-11.9	274.6	357.9
	10	37790	-20.6	- 9.6	274.6	365.1
	15	41000	-15.6	- 7.3	274.6	372.4
0	0	28740	-34.5	-16.2	274.6	344.6
	5	32800	-28.8	-13.5	274.6	353.0
	10	35840	-23.8	-11.2	274.6	360.3
	15	39000	-18.9	- 9.6	274.6	366.8
7.5	0	25800	-40.2	-18.8	274.6	336.3
	5	29450	-34.5	-16.2	274.6	344.6
	10	32180	-29.6	-13.9	274.6	351.8
	15	35000	-25.5	-11.9	274.6	357.9
15	0	(20083)	-49.4	-23.1	274.6	322.8
	5	23250	-44.3	-20.8	274.6	330.2
	10	26040	-39.4	-18.5	274.6	337.4
	15	28000	-36.1	-16.9	274.6	342.3

*Baseline Weights

(1) Landing Gear System, Ref. Table 21

(2) Shock Strut Affected Weight, Ref. Table 23

(3) Fittings, Ref. Table 21

(4) Baseline Load = 50,390 Lb (Ref. Pg. 63) (Obstruct. Load, Ref. Fig. 25)

TABLE A-7. MASS PROPERTIES AND LOCATION

	WEIGHTS	MASS COORDINATES F.S.,B.L.,W.L.			MASS MOMENTS OF INERTIA (LB-IN-SEC**2)			
I	W	X''	Y''	Z''	IX	IY	IZ	I
1	2.23400D+03	2.00000D+02	0.0	5.85000D+01	1.00000D+02	1.00000D+02	1.00000D+02	1
2	1.81700D+03	2.79000D+02	0.0	5.85000D+01	1.00000D+02	1.00000D+02	1.00000D+02	2
3	2.75300D+03	3.00000D+02	0.0	1.80000D+02	1.00000D+02	1.00000D+02	1.00000D+02	3
4	1.93000D+03	3.20000D+02	0.0	5.85000D+01	1.00000D+02	1.00000D+02	1.00000D+02	4
5	9.00000D+02	4.50000D+02	0.0	8.85000D+01	1.00000D+02	1.00000D+02	1.00000D+02	5
6	2.50000D+01	2.55750D+02	3.42500D+01	5.41300D+01	1.00000D+02	1.00000D+02	1.00000D+02	6
7	2.50000D+01	2.55750D+02	-3.42500D+01	5.41300D+01	1.00000D+02	1.00000D+02	1.00000D+02	7
8	5.00000D+01	2.49500D+02	3.42500D+01	3.72500D+01	1.00000D+02	1.00000D+02	1.00000D+02	8
9	5.00000D+01	2.49500D+02	-3.42500D+01	3.72500D+01	1.00000D+02	1.00000D+02	1.00000D+02	9
10	2.00000D+01	2.00000D+02	0.0	7.08500D+01	5.95000D+00	6.61000D+00	3.15000D+00	10
11	7.30000D+01	2.00000D+02	0.0	7.83000D+01	1.39500D+01	1.47700D+01	1.68300D+01	11
12	7.30000D+01	2.00000D+02	0.0	9.34000D+01	1.13000D+01	1.08000D+01	6.53000D+00	12
13	7.30000D+01	2.00000D+02	0.0	9.34000D+01	1.13000D+01	1.08000D+01	6.53000D+00	13
14	2.50000D+01	2.50000D+02	3.82500D+01	3.11000D+01	5.00000D+03	5.00000D+03	5.00000D+03	14
15	2.50000D+01	2.50750D+02	-3.82500D+01	3.11000D+01	5.00000D+03	5.00000D+03	5.00000D+03	15

TABLE A-8. NODE POINT LOCATIONS

NODE POINT DATA

MASS I	N.P. M	NODE POINT COORDINATES F.S.,B.L.,W.L. X''	Y''	Z''
4	1	3.00000D+02	0.0	5.85000D+01
2	1	2.74000D+02	3.42500D+01	1.05750D+02
2	2	2.26170D+02	3.42500D+01	5.78700D+01
2	3	2.74000D+02	-3.42500D+01	1.05750D+02
2	4	2.26170D+02	-3.42500D+01	5.78700D+01
8	1	2.50250D+02	3.42500D+01	3.11000D+01
9	1	2.50250D+02	-3.42500D+01	3.11000D+01
1	1	2.00000D+02	2.40000D+01	6.05000D+01
1	2	2.00000D+02	-2.40000D+01	6.05000D+01
2	5	2.79000D+02	2.40000D+01	6.05000D+01
2	6	2.79000D+02	-2.40000D+01	6.05000D+01
4	2	3.20000D+02	2.40000D+01	6.05000D+01
4	3	3.20000D+02	-2.40000D+01	6.05000D+01
1	3	2.00000D+02	4.10000D+01	6.05000D+01
1	4	2.00000D+02	-4.10000D+01	6.05000D+01
2	7	2.79000D+02	4.60000D+01	6.05000D+01
2	8	2.79000D+02	-4.60000D+01	6.05000D+01
2	9	2.26170D+02	2.70000D+01	5.78700D+01
2	10	2.26170D+02	-2.70000D+01	5.78700D+01

TABLE A-9. BEAM DATA

BEAM I	BEAM J	BEAM M	BEAM N	AREA A	MOMENTS OF INERTIA IYY	IZZ	JX	Z1	Z2	XIQ	LENGTH XLB	DAMPING RATIO CDAR	MC	T L	P-CODES Y I	Z I	Y J	Z J	BEAM I	BEAM J	BEAM M
1	2	0	0	2.000D+01	4.500D+02	1.000D+03	2.000D+02	1.000D+00	1.000D+00	0.0	7.900D+01	5.000D-02	5	0	0	0	0	1	1	2	0
2	4	0	1	2.000D+01	4.500D+02	2.000D+03	2.000D+02	1.000D+00	1.000D+00	0.0	2.100D+01	5.000D-02	5	0	0	0	0	2	2	4	0
3	4	0	1	2.000D+01	3.500D+03	3.500D+03	2.400D+03	1.000D+00	1.000D+00	0.0	1.215D+02	5.000D-02	5	0	0	0	0	3	3	4	0
4	5	0	0	2.000D+01	4.000D+02	1.000D+02	1.000D+02	1.000D+00	1.000D+00	0.0	1.330D+02	5.000D-02	5	0	0	0	0	4	4	5	0
2	6	1	0	1.100D+00	1.000D+02	1.000D+02	1.000D+00	1.000D+00	1.000D+00	0.0	5.475D+01	5.000D-02	8	1	1	0	0	5	2	6	1
2	7	3	0	1.100D+00	1.000D+02	1.000D+02	1.000D+00	1.000D+00	1.000D+00	0.0	5.475D+01	5.000D-02	8	1	1	0	0	6	2	7	3
6	8	0	0	2.000D+00	1.000D+02	1.000D+02	1.000D+00	1.000D+00	1.000D+00	0.0	1.600D+01	5.000D-02	8	0	0	1	1	7	6	8	[illegible]
7	9	0	0	2.000D+00	1.000D+02	1.000D+02	1.000D+00	1.000D+00	1.000D+00	0.0	1.000D+01	5.000D-02	8	0	0	1	1	8	7	9	0
2	8	2	1	2.500D+00	1.000D+01	1.000D+01	2.000D+01	1.000D+00	1.000D+00	0.0	3.601D+01	5.000D-02	2	1	0	0	0	9	2	8	2
[illegible]	9	4	1	2.500D+00	1.000D+01	1.000D+01	2.000D+01	1.000D+00	1.000D+00	0.0	3.601D+01	5.000D-02	2	1	0	0	0	10	2	9	[illegible]
	10	0	0	4.300D-03	2.000D+00	2.000D+00	4.000D+00	1.000D+00	1.000D+00	0.0	1.035D+01	5.000D-02	4	0	0	0	0	11	1	10	[illegible]
[illegible]	11	0	0	2.000D-03	5.000D-02	5.000D-02	1.000D-01	1.000D+00	1.000D+00	0.0	7.450D+00	5.000D-02	4	0	0	0	0	12	10	11	[illegible]
11	12	0	0	2.000D-02	7.500D-03	7.500D-03	1.500D-02	1.000D+00	1.000D+00	0.0	1.510D+01	5.000D-02	4	0	0	0	0	13	11	12	0
11	13	0	0	7.215D-03	4.800D-03	4.800D-03	9.600D-03	1.000D+00	1.000D+00	0.0	1.510D+01	3.111D-0110	0	0	0	0	0	14	11	13	0
8	14	1	0	1.000D+00	2.500D+01	2.500D+01	1.000D+00	1.000D+00	1.000D+00	0.0	4.000D+00	5.000D-02	8	0	0	1	1	15	8	14	[illegible]
9	15	1	0	1.000D+00	2.500D+01	2.500D+01	1.000D+00	1.000D+00	1.000D+00	0.0	4.000D+00	5.000D-02	8	0	0	1	1	16	9	15	1

TABLE A-10. MATERIAL PROPERTIES

MC	MATERIAL	MODULUS OF ELASTICITY (PSI)	MODULUS OF RIGIDITY (PSI)
2	6150H Steel	30.0E6	11.0E6
4	2024-T3 Aluminum	10.5E6	4.0E6
5	6061-T3 Aluminum	10.0E6	3.8E6
8	Zero Torsion Material	1.0E6	0.0
10	DRI Spine (DRI)	1.0E6	0.3E6

TABLE A-11. BEAM END FIXITY DATA

	BEAM					P-CODES			
	IJ	I	J	M	N	IY	IZ	JY	JZ
R.H. Upper Oleo Attachment	5	2	6	1	0	1	1	0	0
L.H. Upper Oleo Attachment	6	2	7	3	0	1	1	0	0
R.H. Lower Oleo Attachment	7	6	8	0	0	0	0	1	1
L.H. Lower Oleo Attachment	8	7	9	0	0	0	0	1	1
R.H. Drag Beam Attachment	9	2	8	2	1	1	0	0	0
L.H. Drag Beam Attachment	10	2	9	4	1	1	0	0	0
R.H. Wheel Axle	15	8	14	1	0	0	0	1	1
L.H. Wheel Axle	16	9	15	1	0	0	0	1	1

TABLE A-12. SPRING DATA

SPRING I	SPRING K	SPRING M	FREE LENGTH LBAR(IKM)	FRICTION COEFFICIENT MU(IKM)	BOTTOMING SPRING KE(IKM)
14	3	0	9.75000D+00	3.40000D-01	4.00000D+04
15	3	0	9.75000D+00	3.40000D-01	4.00000D+04
5	3	0	6.53500D+01	3.40000D-01	1.00000D+04
1	3	1	7.50000D+00	3.40000D-01	7.00000D+03
1	3	2	7.50000D+00	3.40000D-01	7.00000D+03
2	3	9	1.50000D+00	3.40000D-01	7.50000D+04
2	3	10	1.50000D+00	3.40000D-01	7.50000D+04
2	3	5	7.50000D+00	3.40000D-01	7.00000D+03
2	3	6	7.50000D+00	3.40000D-01	7.00000D+03
4	3	2	7.50000D+00	3.40000D-01	7.00000D+03
4	3	3	7.50000D+00	3.40000D-01	7.00000D+03
1	3	3	7.50000D+00	3.40000D-01	7.00000D+03
1	3	4	7.50000D+00	3.40000D-01	7.00000D+03
2	3	7	7.50000D+00	3.40000D-01	7.00000D+03
2	3	8	7.50000D+00	3.40000D-01	7.00000D+03

DEFLECTION COORDINATES

SI(IKM)	SA(IKM)	SB(IKM)	SF(IKM)
3.00000D+00	3.50000D+00	4.00000D+00	4.50000D+00
3.00000D+00	3.50000D+00	4.00000D+00	4.50000D+00
5.00000D+00	1.80000D+01	2.00000D+01	2.40000D+01
1.00000D-01	2.75000D+00	2.76000D+00	3.75000D+00
1.00000D-01	2.75000D+00	2.76000D+00	3.75000D+0'
1.00000D+00	1.00000D+00	1.01000D+00	1.02000D+00
1.00000D+00	1.00000D+00	1.01000D+00	1.02000D+00
1.00000D-01	2.75000D+00	2.76000D+00	3.75000D+00
1.00000D-01	2.75000D+00	2.76000D+00	3.75000D+00
1.00000D-01	2.75000D+00	2.76000D+00	3.75000D+00
1.00000D-01	2.75000D+00	2.76000D+00	3.75000D+00
1.00000D-01	2.75000D+00	2.76000D+00	3.75000D+00
1.00000D-01	2.75000D+00	2.76000D+00	3.75000D+00
1.00000D-01	2.75000D+00	2.76000D+00	3.75000D+00
1.00000D-01	2.75000D+00	2.76000D+00	3.75000D+00

SPRING AXIAL FORCES

FSPOI(IKM)	FSPOF(IKM)	CRIT.DAMP	CDAMP(IKM)
1.00000D+04	2.00000D+04	1.00000D-01	-2.93711D+00
1.00000D+04	2.00000D+04	1.00000D-01	2.93711D+00
1.95000D+04	1.95000D+04	1.00000D-01	1.96619D+01
3.64800D+04	3.64800D+04	2.00000D-02	5.80912D+01
3.64800D+04	3.64800D+04	2.00000D-02	5.80912D+01
7.50000D+04	7.50000D+04	2.00000D-02	2.37547D+01
7.50000D+04	7.50000D+04	2.00000D-02	2.37547D+01
4.03200D+04	4.03200D+04	2.00000D-02	5.50781D+01
4.03200D+04	4.03200D+04	2.00000D-02	5.50781D+01
1.82400D+04	1.82400D+04	2.00000D-02	3.81797D+01
1.82400D+04	1.82400D+04	2.00000D-02	3.81797D+01
1.36800D+04	1.36800D+04	2.00000D-02	3.55735D+01
1.36800D+04	1.36800D+04	2.00000D-02	3.55735D+01
1.48800D+04	1.48800D+04	2.00000D-02	3.34596D+01
1.48800D+04	1.48800D+04	2.00000D-02	3.34596D+01

TABLE A-13. OLEO STRUT INPUT DATA

OLEO STRUT BEAM DATA

BEAM AIR CURVE PARAMETERS

IJ	I	J	M	N	SOLEO	FAO	FAA	EXPOLE	YMAX
5	2	6	1	0	1.327D+01	4.980D+03	1.220D+02	1.300D+00	1.100D+01
6	2	7	3	0	1.327D+01	4.980D+03	1.220D+02	1.300D+00	1.100D+01
7	6	8	0	0	1.503D+01	7.374D+02	1.220D+02	1.300D+00	1.450D+01
8	7	9	0	0	1.503D+01	7.374D+02	1.220D+02	1.300D+00	1.450D+01

BEAM DAMPING CONSTANTS,COULOMB FRICTION AND LINEAR 'SPRINGS (EXTENSION&COMPRESSION)

IJ	I	J	M	N	BOLEO	BROLEO	XKEXT	XKCOMP	FCOUL
5	2	6	1	0	1.000D+00	3.000D+00	2.000D+05	2.000D+05	5.500D+00
6	2	7	3	0	1.000D+00	3.000D+00	2.000D+05	2.000D+05	5.500D+00
7	6	8	0	0	5.000D-01	3.000D+00	2.000D+05	2.000D+05	5.500D+00
8	7	9	0	0	5.000D-01	3.000D+00	2.000D+05	2.000D+05	5.500D+00