AD-A152 480

NWC TP 6577

(2)

Voltammetric Analysis of Ordnance Materials

Part 2. A Portable Digital Voltammeter for Use With a Silver Wire Working Electrode

by
Dwight A. Fine
Research Department

and

David A. Reeve
Robert A. Dickus
Weapons Department

DECEMBER 1984

NAVAL WEAPONS CENTER
CHINA LAKE, CA 93555-6001

DTIC
ELECTE
APR 16 1985
S D
B

Approved for public release; distribution is unlimited.

DTIC FILE COPY

85 4 10 103

DISCLAIMER NOTICE

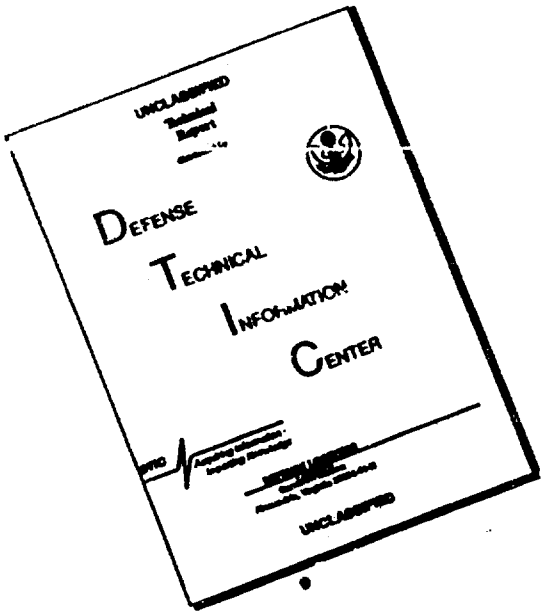

THIS DOCUMENT IS BEST QUALITY AVAILABLE. THE COPY FURNISHED TO DTIC CONTAINED A SIGNIFICANT NUMBER OF PAGES WHICH DO NOT REPRODUCE LEGIBLY.

Naval Weapons Center

AN ACTIVITY OF THE NAVAL MATERIAL COMMAND

FOREWORD

This report summarizes efforts to find suitable voltammetric methods for analysis of nitrate esters and aromatic nitro compounds and is presented in two parts under the general title, "Voltammetric Analysis of Ordnance Materials." Part 1 (NWC TP 6505, published in April 1984) is "Detection and Quantitation of Nitrate Esters and Various Nitro Compounds in Water by Voltammetry," and this report is Part 2. We have included some material published previously in October 1981 as NWC TM 4684 and have incorporated updates to that material.

The work described in this report was performed as part of a general program of electrochemical analysis of ordnance materials. The work was sponsored by the Naval Sea Systems Command, Task Area Number WF65559, Program Element 62565N; by the U.S. Army Toxic and Hazardous Materials Agency, Task R904.10.0163; and by the Naval Underwater Systems Center, WPN Source AA17X492.3790.

This report has been reviewed for technical accuracy by George McManis.

Approved by
E. B. ROYCE, Head
Research Department
15 November 1984

Under authority of
K. A. DICKERSON
Capt., USN
Commander

Released for publication by
B. W. HAYS
Technical Director

NWC Technical Publication 6577

Published by. . . . . Technical Information Department
Collation . . . . . Cover, 27 leaves
First printing. . . . . 215 copies

UNCLASSIFIED

SECURITY CLASSIFICATION OF THIS PAGE (When Data Entered)

REPORT DOCUMENTATION PAGE

READ INSTRUCTIONS BEFORE COMPLETING FORM

1. REPORT NUMBER
NWC TP 6577

2. GOVT ACCESSION NO.
ADA152480

3. RECIPIENT'S CATALOG NUMBER

4. TITLE (and Subtitle)
VOLTAMMETRIC ANALYSIS OF ORDNANCE MATERIALS. PART 2. A PORTABLE DIGITAL VOLTAMMETER FOR USE WITH A SILVER WIRE WORKING ELECTRODE.

5. TYPE OF REPORT & PERIOD COVERED
Final Report
February 1980-February 1984

6. PERFORMING ORG. REPORT NUMBER

7. AUTHOR(s)
Dwight A. Fine, David A. Reeve, and Robert A. Dickus

8. CONTRACT OR GRANT NUMBER(s)

9. PERFORMING ORGANIZATION NAME AND ADDRESS
Naval Weapons Center
China Lake, CA 93555-6001

10. PROGRAM ELEMENT, PROJECT, TASK AREA & WORK UNIT NUMBERS
NAVSEA Task WF65559, USATHAMA Task R904.10.0163, NUSC WPN Source AA17X492.3790

11. CONTROLLING OFFICE NAME AND ADDRESS
Naval Weapons Center
China Lake, CA 93555-6001

12. REPORT DATE
December 1984

13. NUMBER OF PAGES
52

14. MONITORING AGENCY NAME & ADDRESS(if different from Controlling Office)

15. SECURITY CLASS. (of this report)
UNCLASSIFIED

15a. DECLASSIFICATION/DOWNGRADING SCHEDULE

16. DISTRIBUTION STATEMENT (of this Report)
Approved for public release; distribution is unlimited.

17. DISTRIBUTION STATEMENT (of the abstract entered in Block 20, if different from Report)

18. SUPPLEMENTARY NOTES

19. KEY WORDS (Continue on reverse side if necessary and identify by block number)

Analysis	Fuels
Contamination	Instrumentation
Electrochemistry	Voltammetry
Explosives	Water

20. ABSTRACT (Continue on reverse side if necessary and identify by block number)

See back of form.

DD FORM 1 JAN 73 1473 EDITION OF 1 NOV 65 IS OBSOLETE
S N 0102-LF-014-6601

UNCLASSIFIED

SECURITY CLASSIFICATION OF THIS PAGE (When Data Entered)

(U) Voltammetric Analysis of Ordnance Materials. Part 2. A Portable Digital Voltammeter for Use With a Silver Wire Working Electrode, by Dwight A. Fine, David A. Reeve and Robert A. Dickus. China Lake, Calif., Naval Weapons Center, December 1984. 52 pp. (NWC TP 6577, publication UNCLASSIFIED.)

(U) An inexpensive, portable, digital voltammeter has been designed and built at NWC. The instrument is intended for use with a silver wire working electrode. The voltammeter was built in response to a need on the part of Navy facilities for the monitoring of effluent water from the carbon column cleanup process used to remove propyleneglycoldinitrate from Otto fuel waste water. The instrument may also be used for the monitoring of contaminants such as nitroglycerin, dinitrotoluene, trinitrotoluene and nitroguanidine. This report describes in detail the construction, circuitry, software and operational features of the instrument.

CONTENTS

Introduction 3

General Description 3
Description of Controls 5
Ammeter 5
Month/Day 5
Light Emitting Diode (LED) 5
Standard Concentration 5
Mode Switch 7
Display (ppm) 7
Run 7
Reset 7

System Description 7

Specifications 13

Microprocessor Program 15

Calculations 15
Input Parameters 17
Calculated Parameters 17
Equations to be Processed 17

Operating Procedure 18

References 20

Appendices:
A. Hardware Documentation 21
B. Printout of Software Program 33

DTIC
ELECTE
APR 16 1985
S D
B

Accession For
NTIS GRA&I ☑
DTIC TAB ☐
Unannounced ☐
Justification
By
Distribution/
Availability Codes
Dist | Avail and/or Special
A-1

DTIC COPY INSPECTED 3

RE: NWC-TP-6577
Pages 24 and 25 do not contain proprietary information per Dr. Adolph Amster, NWC

INTRODUCTION

A silver wire electrode has been found to be an effective working electrode for the voltammetric determination of nitrate esters and aromatic nitro compounds in water (Reference 1). The search for such an electrode was prompted by interest on the part of ordnance facilities in the monitoring of effluent waters for contamination by materials such as propyleneglycoldinitrate (PGDN), nitroglycerin (NG), dinitrotoluene (DNT), and trinitrotoluene (TNT). Commercially available voltammeters are too expensive and complex for purposes of bench or field testing, and a portable digital voltammeter has been developed at the Naval Weapons Center (NWC). The voltammeter was built by the Electronics Systems Branch at the request of the Instrumental Chemical Analysis Branch. This report describes the construction, circuitry, software, and operation of the instrument.

GENERAL DESCRIPTION

The voltammeter is designed to operate in conjunction with a silver wire working electrode, a platinum wire counter electrode and a standard calomel electrode (SCE) or silver/silver chloride reference electrode. A diagram of the system is shown in Figure 1.

The control unit was designed to meet the following criteria:

1. Portable. Housed in aluminum instrument case. Size: 18 x 13 x 5 inches (45 x 32.5 x 12.5 cm).

2. Semiautomatic. For simple operation by field personnel. Powered by conventional 115 V AC.

3. Drive solid electrodes with slow varying voltage ramps.

4. Take measurements of electrode currents for signal processing.

5. Calculate the contamination level in parts per million (ppm) and provide this value on hard copy printout.

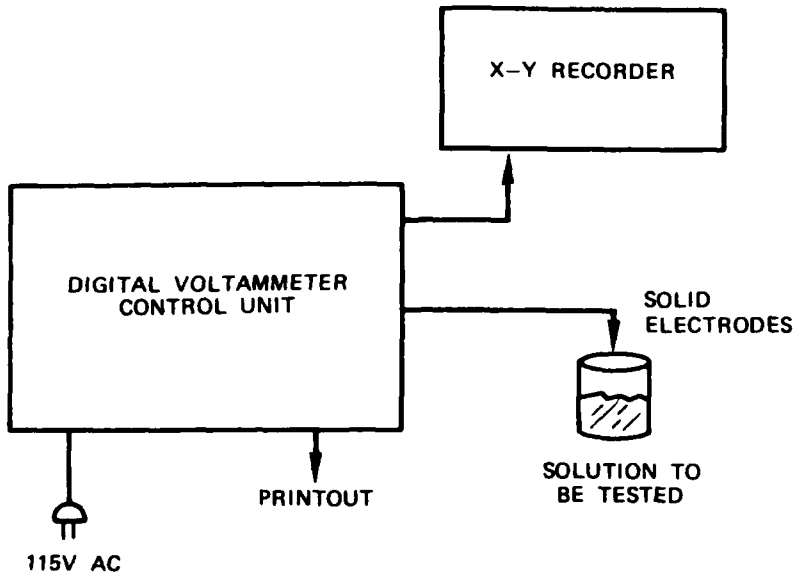

FIGURE 1. Diagram of the Voltammeter.

Expected levels of contamination to be measured by the instrument are in the range of 0.1 to 10 ppm. Although designed specifically to measure contamination by PGDN, it can be used to measure contamination by other nitrate esters and nitro compounds which have similar voltammograms, e.g., NG, DNT, and TNT.

The equipment setup for performing the digital voltammeter test consists of the electronic control unit and the test solution chamber with solid electrodes. The test chamber apparatus will consist of the test solution in the chamber, with means to support three electrodes in the solution. A cable connects the control unit to the top of the solid electrodes. The electronic control unit will sit on a workbench and plug into 115 V AC for power. Three analog test points are provided on the front panel to drive an X-Y recorder. Use of an X-Y recorder is not necessary for normal use of this system.

A connector on the front panel mates the cable to the test chamber. The cable has color-coded clips that readily attach to the electrodes. A brief outline follows which describes basic operation of a single testing of a test solution.

1. Prepare the test chamber.

2. Power on.

3. Run in BLANK mode.

4. Prepare the chamber. Run in CAL (calibration) mode.

5. Prepare the chamber. Run in TEST mode.

6. Printer supplies hard copy of results.

7. Power off.

Each "run" will take a little less than 4 minutes to complete.

The system provides a slow varying voltage ramp to the electrodes. As the ramp voltage increases in absolute value, the chamber solution reacts chemically, characterized by a varying electric current in the working electrode, which is proportional to the amount of chemical contamination in the solution. This varying electric current is amplified, measured, and stored internally. The heart of the electronics system is the Intel 8085 microprocessor. Under software control, the system subtracts the background current from the current due to the contaminant, then the system calculates the concentration of contaminant (range: 0.1 to 10.0 ppm) by comparison with the current obtained from a known standard solution. The calculated concentration in ppm is displayed and printed out on hard copy.

DESCRIPTION OF CONTROLS

Figure 2 is a diagram of the front panel of the voltammeter. A brief description of each part of the front panel is given.

Ammeter

Indicates current flow between working and counter electrodes.

Month/Day

Date is dialed manually by operator before start of the day's runs.

Light Emitting Diode (LED)

These four lights are illuminated in succession during a run to indicate the completion of the three fast voltage scans and the start of the slow scan.

Standard Concentration

Indicates concentration of solution used for standard. Correct value in ppm is dialed manually by operator before start of run.

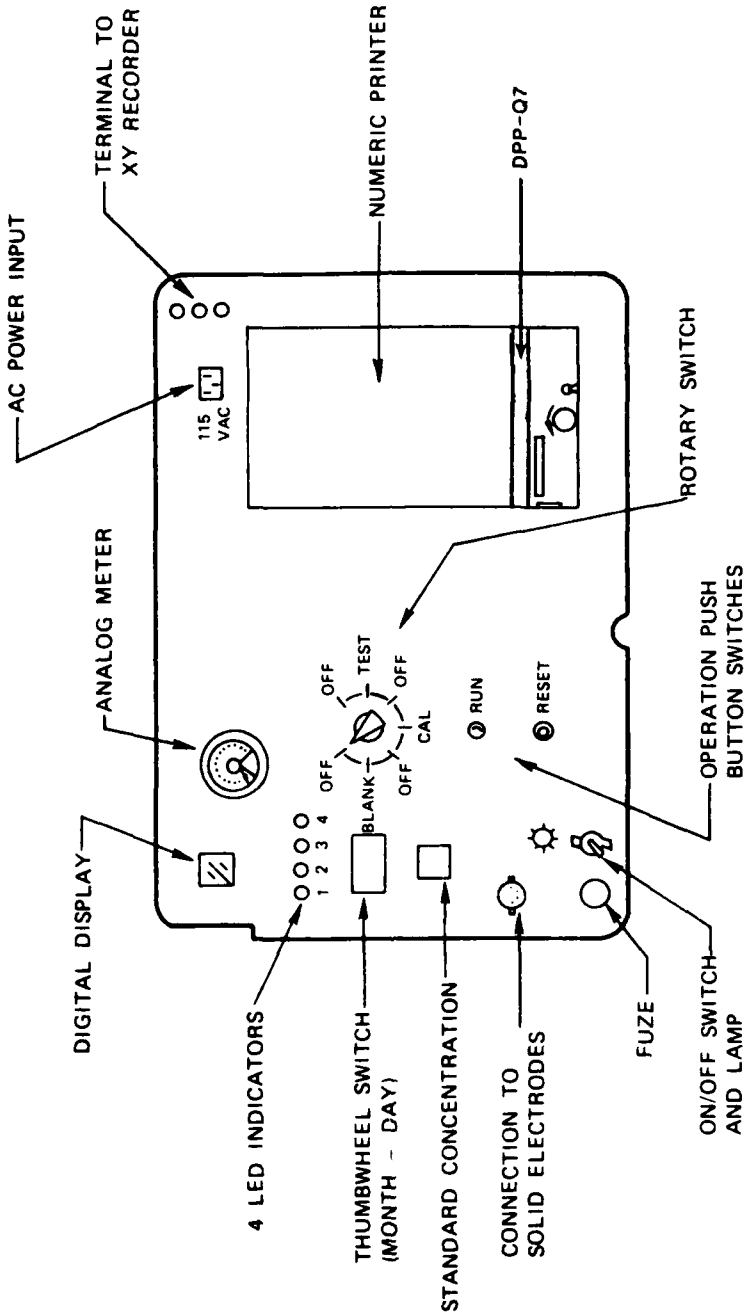

FIGURE 2. Diagram of the Front Panel of the Voltammeter.

Mode Switch

When this switch is set to BLANK, CAL, or TEST, the electrode cell is placed into the circuit and the resulting current flow shows on the ammeter.

Display (ppm)

Shows integral part of number which is printed by microprocessor.

Run

Pressing of this button actuates the sequence of three rapid voltage scans followed by one slow scan.

Reset

Pressing of this button aborts any run in progress. Results from previous runs are retained in memory.

SYSTEM DESCRIPTION

Figure 3 is a diagram of the entire system. The electrode current amplifier converts the electric current to a voltage, amplifies it, and scales it properly to drive the analog meter and the sample/hold amplifier. The analog meter is a real-time display of the relative amplitude of the electrode current (signal Y). The sample/hold amplifier is under software control and includes an analog-to-digital (A/D) conversion of the signal for the microprocessor. The scan generator circuits consist of a digital-to-analog (D/A) converter and scaling amplifiers.

Software controls the rate of both types of scans (fast: 50 mV/s; slow: 5 mV/s). The output labeled X is the voltage ramp, which is made available at an X-Y recorder terminal, and also goes to the counter electrode at the chamber. The reference electrode signal is brought into this circuit and added to the counter electrode signal to maintain a correct drive potential to the chamber.

Front panel control switches include a system RESET switch, RUN switch, and mode selection rotary switch. Their functions are detailed later. Front panel thumbwheel switches provide:

1. Setting in numbers which indicate month and day. These digits will be printed on the hard copy printout.

2. Standard solution concentration number (usually set at 1).

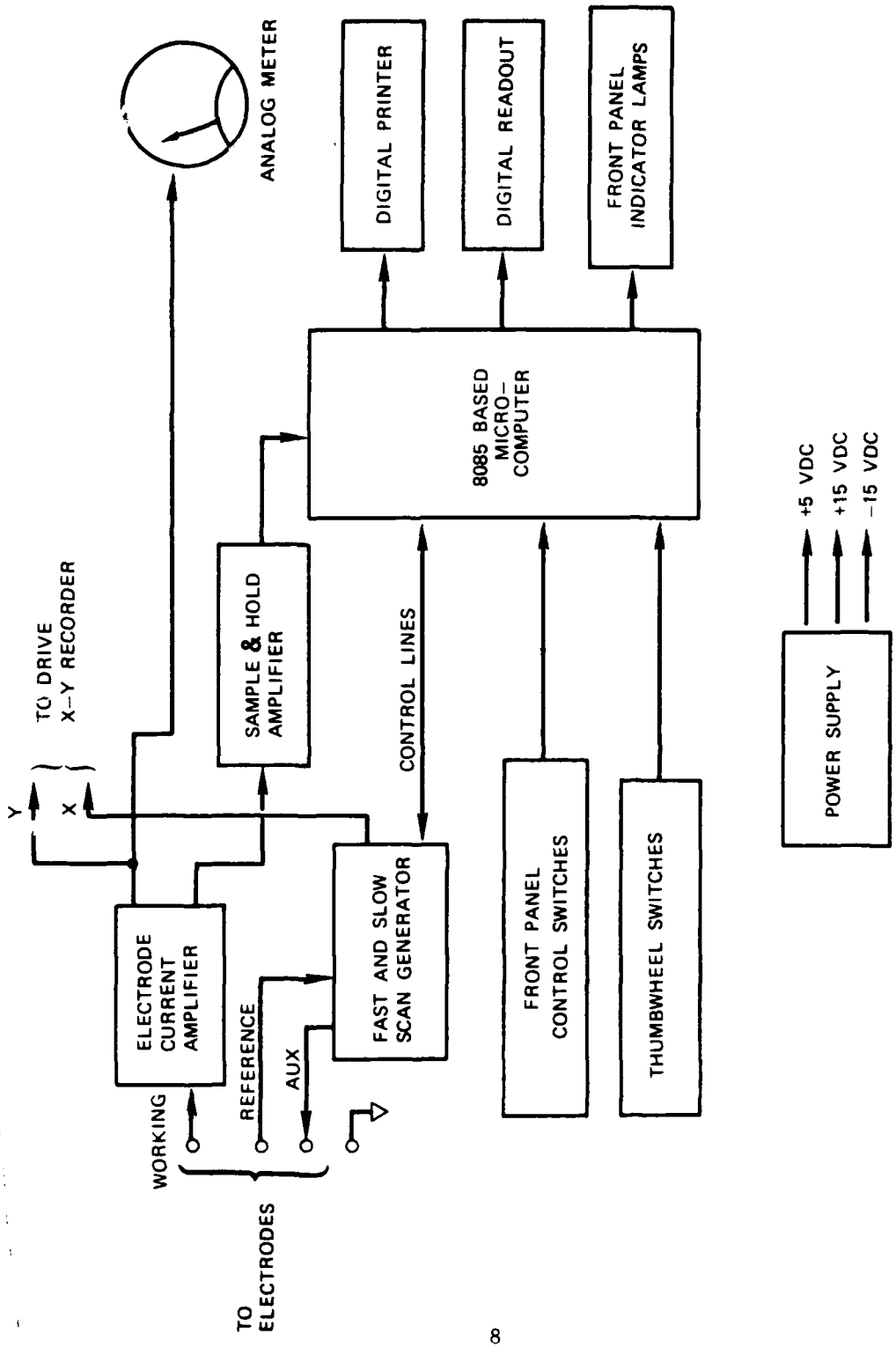

FIGURE 3. System Diagram, Voltammeter Electronic Unit.

The digital printer, DATEL DPP-Q7, is a self-contained numeric thermal printer. It is controlled by microprocessor software and will print the date and the resultant contamination level in ppm. The LED numeric digital display will indicate the test results in ppm and may be used for diagnostic tests on the system or display of intermediate results.

There is a set of four individual light-emitting diode lamps on the front panel that will indicate the progress in real time of a RUN sequence. The power supply for the unit is internal and is powered by 115 V AC. An on/off switch, fuze, and power-on lamp are on the front panel.

Figure 2 shows the front panel layout. The analog meter, scaled for 0 to 2 V DC, shows the relative magnitude of electric current coming from the working electrode during any scan (fast or slow--in any of the three modes) in real time. The rotary switch is used to select the mode of operation for a run operation. The off position means that no mode is selected and presents an off condition to the electrodes. An off condition for the electrodes is working electrode grounded, counter electrode open, and reference electrode--no change.

Figure 4 illustrates the basic circuit for operation of the electrodes in a run condition and in an off condition. The rotary switch is to be set to OFF when preparations are made to the test chamber. Just before pressing RUN to start a run sequence, the rotary switch is set to the desired mode. At the conclusion of a run (i.e., when all four lamps are on and a value is present on the digital display), the rotary switch is returned to off.

There are two momentary push button switches. The RUN switch, when activated, initiates active running of the software program. Once pressed, the system begins running and continues to completion of a cycle (just less than 4 minutes) unless reset. The RESET push button will interrupt any operation and set the system in a reset state awaiting a run command. Use of the reset switch would occur when it is necessary to halt the system operation and start over. Stored data from previously completed runs will be retained in memory when the system is reset.

The digital display of two digits will primarily be used to display final results of a test in ppm. During active operation and in the reset condition this display will be blank. The four LED lamps will show progression through a single test. They will light under the following conditions:

LED 1 At conclusion of first FAST scan.

LED 2 At conclusion of second FAST scan.

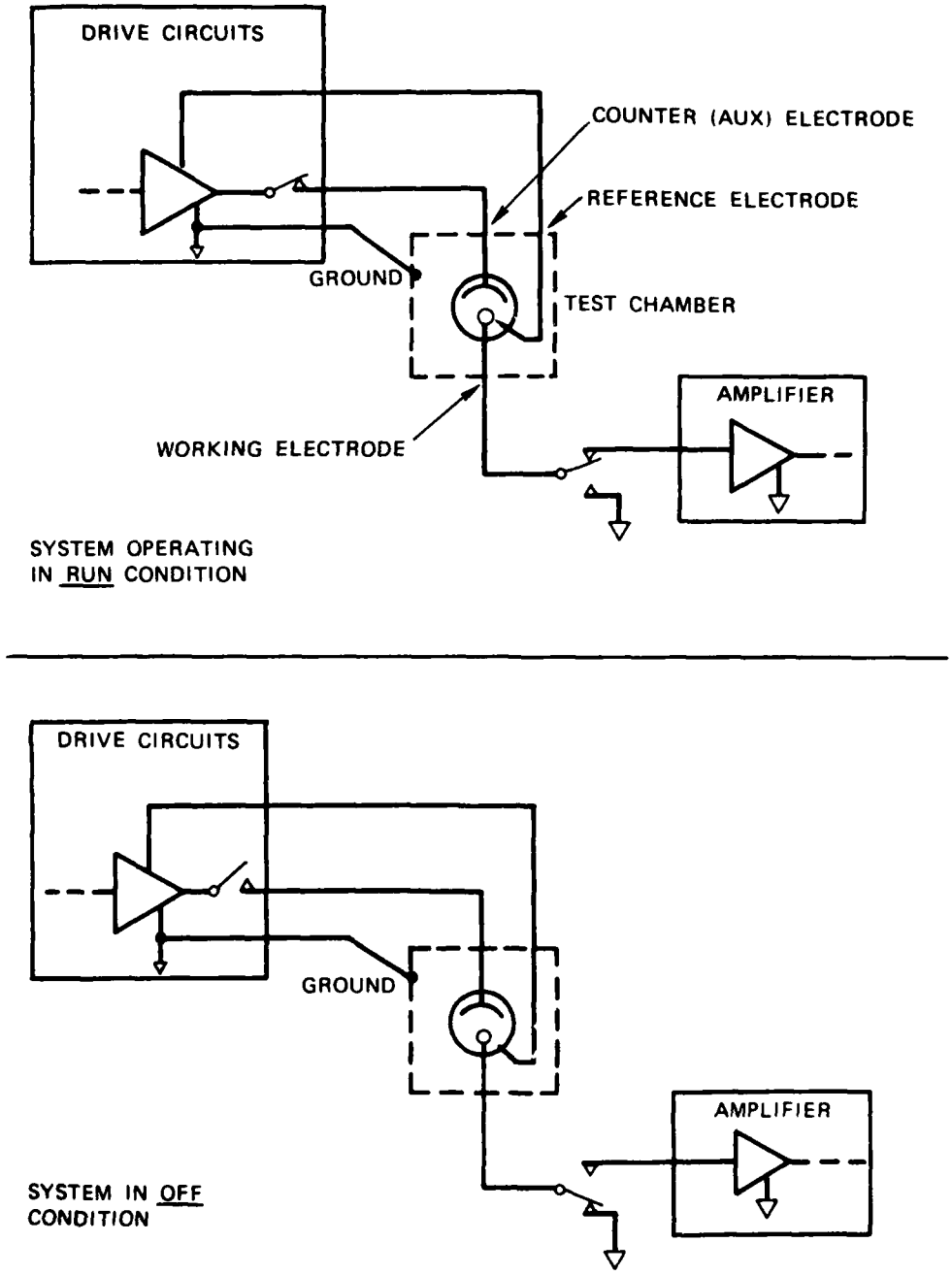

FIGURE 4. Basic Electrode Circuit.

LED 3 At conclusion of third FAST scan.

LED 4 At conclusion of the 60-second pause.

All four LEDs lit at once indicate that the three preparation scans and the pause have been completed, and that the system will immediately begin a slow scan in the selected mode. At the end of a slow scan, the digital display will turn on with the resultant parameter for that mode. This concludes a "run." Pressing RUN or RESET will immediately turn the digital display and the four LEDs off.

Figure 5 is a diagram of the electronics system. The Intel 8085 microprocessor is the controller for the system. It is wired on the PLS-858 card, a standard microcomputer card from Pro-Log Corporation, which includes system memory circuits. The software program in machine language is stored in two erasable programmable read-only memory (EPROM) devices. These memory devices were programmed with the Tektronix 8002 Microcomputer Development System. The analog circuits card was built and designed at NWC and contains integrated circuit amplifiers and data converters to process signals for the first prototype and was replaced with a printed circuit (PC) Board in the second unit that was built. The thumbwheel switches circuit is contained on a PC board and is now readily reproducible. The digital display board is presently wire wrap and could be replaced with a PC board directly. The printer interface is also in wire wrap and could be replaced by a PC board, or may completely be eliminated by replacing the numeric printer with a more complex alphanumeric serial input printer. Such a printer could provide lettering on the printout as an added clarity feature and would interface more directly with the microprocessor. This alphanumeric printer costs half again as much as the numeric printer. The rest of the wiring is point-to-point wiring and has been designed to be kept to a minimum (many signals are transferred serially instead of as 8-bit parallel information).

The analog meter is a rugged, watertight, sealed unit, built to withstand the rigors of travel and abuse which the system may encounter in normal usage. It is of much higher quality than standard meters and is scaled to be driven by 0 to 2 V DC signals. It will display electric current variations through the working electrode. The thumbwheel switches circuit and the digital display board were wrapped for the first prototype and were replaced with PC boards in the second unit. The power supplies are standard modules to convert 115 V AC to +5 V DC and to ±15 V DC. This entire electronics system is mounted to the back of the front panel so that it will lift out of the case easily for servicing and modifying.

Appendix A shows detailed schematics, chassis wiring diagrams, and component layouts.

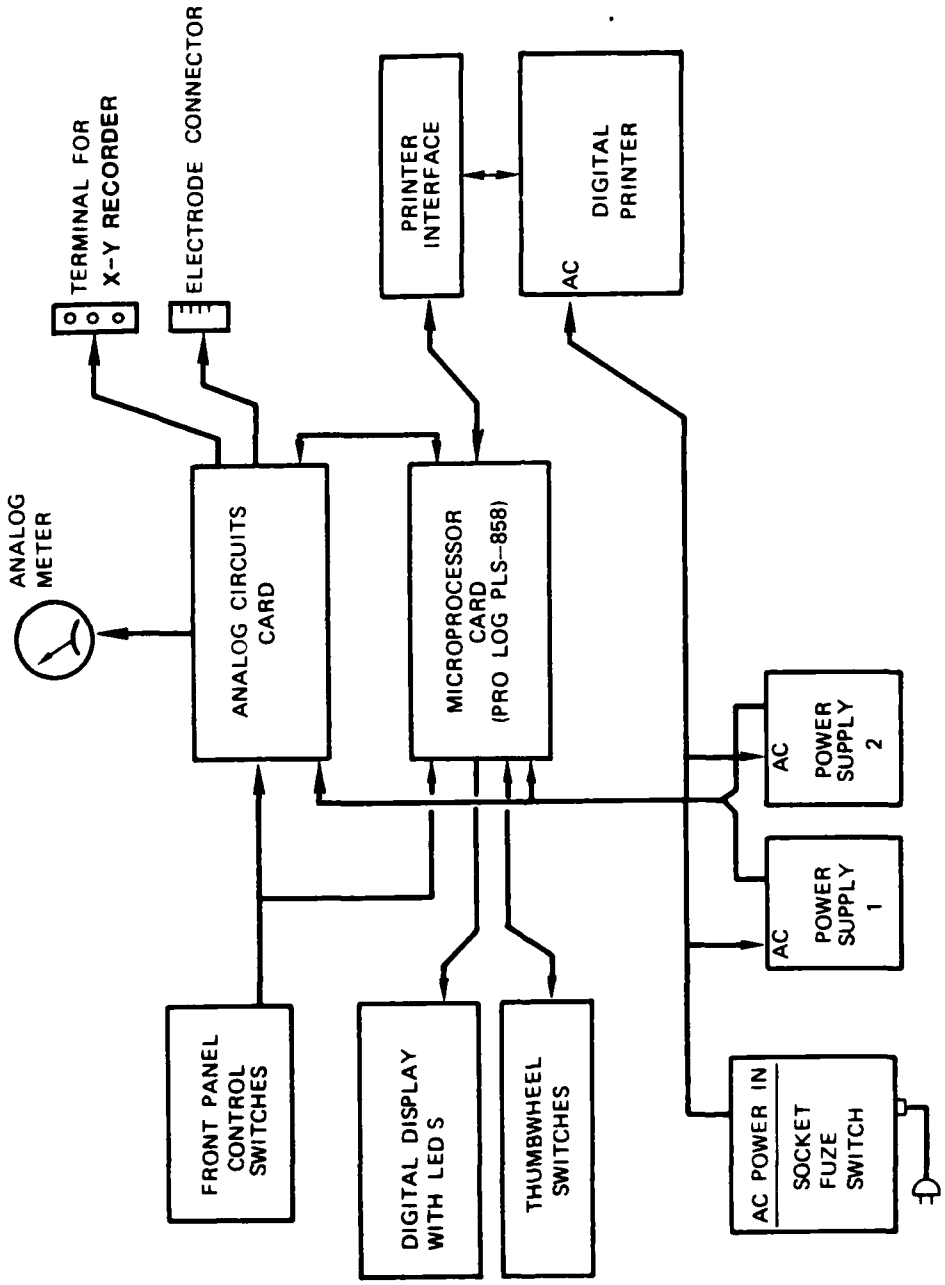

FIGURE 5. Electronic System Diagram.

SPECIFICATIONS

Following is a list of specifications for the voltammeter.

1. Provide FAST and SLOW scans

   FAST defined as 50 mV/s

   SLOW defined as 5 mV/s

2. Voltage range of linear DC ramps during a scan

   FAST scans from -0.30 to -1.20 V

   SLOW scans from -0.30 to -0.80 V

These potential limits are adjustable by changing parameter values in software.

3. The rotary switch will determine the mode of operation

   OFF

   BLANK, pure solution in the chamber

   CAL (calibration), with 1 ppm standard

   TEST, for testing the unknown

4. Pressing the RUN button will cause the following

   Preparation scan 1 FAST

   Preparation scan 2 FAST

   Preparation scan 3 FAST

   60-second pause

   Measuring scan SLOW

5. It will be understood by the operator that the three FAST scans will prepare the electrodes, and that during the one SLOW scan the electrode current will be measured, processed, and recorded.

6. Provide digital readout--two numeric digits will show ppm levels of contamination.

7. Provide outputs capable of driving an X-Y recorder.

8. Provide thumbwheel switch to select ppm level of the standard solution (usually 1 ppm).

9. An electrical connector on the front panel will mate with cables from the electrodes.

10. It is estimated that a 1 ppm contamination level causes a change in electrode current of 0.35 to 0.55 μA. During a CAL run this much current difference should be observed. The software design could be modified to test for this condition. A test failure would indicate a faulty electrode, an incorrect solution mixture, or some similar fault.

11. The printer will provide a hard copy printout of final results in ppm of contaminant.

12. The analog meter will display the relative magnitude of electrode current in real time.

13. During the SLOW scan, a sample window will exist from which the microprocessor will take samples of the electrode current. The microprocessor will record each sample, select the peak sample, and store this peak value as the electric current level for that scan.

14. The sample window is defined as the time during which the electrode potential varies from −0.45 to −0.65 V, during a SLOW scan.

15. The sample and hold amplifier circuit includes an A/D converter. Measured electric current through the working electrode of 40 μA will set the sample and hold amplifier to 9.99 V, which is its limit of measurement. Electric currents exceeding 40 μA will saturate the amplifier and give false results from the system.

16. Table 1 shows the basic parameters to be measured and/or manipulated by the system, and lists their expected limits.

TABLE 1. Basic Parameters and Expected Limits.

Parameter	Software mnemonic	Electric current from electrode	Analog voltage range	Range of values in software
BLANK solution[a]	IBLNK	0-10.80 μA	0-2.70 V	$00\text{-}45_{16}$
CAL solution[a]	IMCAL	0-14.40 μA	0-3.60 V	$00\text{-}5C_{16}$
TEST solution[a]	IMTST	0-36.00 μA	0-8.99 V	$00\text{-}E5_{16}$
Calibration standard	CS			usually 1
Dilution factor	DF			1, 2, 3, or 4

[a] Measured electric current.

MICROPROCESSOR PROGRAM

The Intel 8085 microcomputer software program was developed in assembly language with the use of the Tektronix 8002 Microcomputer Development System. The machine language program was derived from the assembly language listing and stored on EPROMs to be used as hardware for the Digital Voltammeter System. Figure 6 is a general flowchart of the program. Appendix B includes the detailed flowcharts and the list code printout for the entire software program.

CALCULATIONS

Table 2 shows the sequence of calculations of the digital voltammeter. The terms used in the equations are defined in Table 1 and on page 17. The following definitions apply to the parameters used by the software program. A mnemonic is assigned to each parameter.

TABLE 2. Sequence of Calculations of the Digital Voltammeter.

Function	Mode		
	BLANK	CAL	TEST
Parameter (peak of 20)	IBLNK	IMCAL	IMTST
Calculations	None	$ICAL = \frac{(IMCAL-IBLNK)}{CS}$ CS usually = 1	IMBTST = IMTST - IBLNK DF = 1, 2, 3, or 4 IPPMDF = (IPPM)(DF) $= \frac{(IMBTST)(DF)}{ICAL}$
Marker	1	2	3
Results	IBLNK	ICAL	IPPMDF

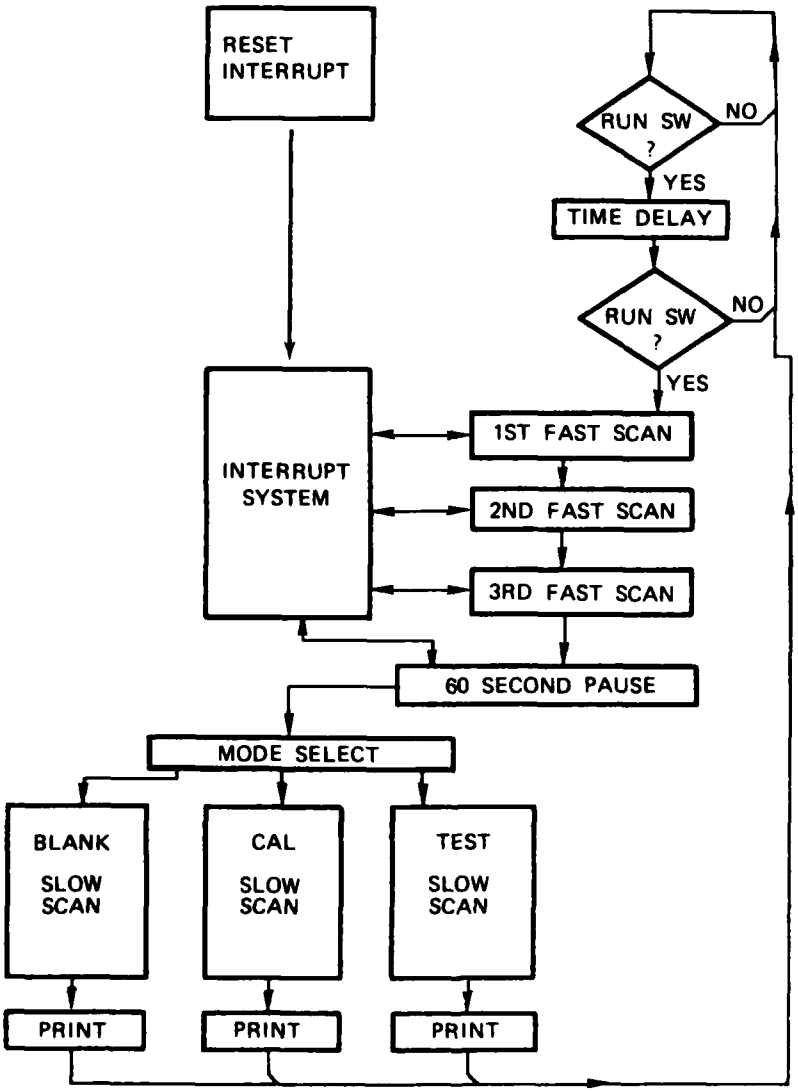

FIGURE 6. General Flow Chart.

INPUT PARAMETERS

IBLNK — The peak value of 20 samples of measured electrode current in the BLANK solution. A measured quantity scaled for software use.

IMCAL — The peak value of 20 samples of measured electrode current in the CAL solution. A measured quantity scaled for software use.

IMTST — The peak value of 20 samples of measured electrode current in the TEST solution. A measured quantity scaled for software use.

CS — Calibration factor; represents the concentration level in the CAL solution. Usually equal to 1 ppm. Set as a factor in software or dialed in by the front panel ppm switch.

DF — Dilution factor; the factor applied to the calculated concentration level in TEST solution assuming no dilution effects when preparing the solution. Set as a factor in software. Usually equal to 1, 2, 3, or 4.

CALCULATED PARAMETERS

ICAL — Value proportional to the differential amount of electric current equivalent to 1 ppm.

IMBTST — Value proportional to the differential amount of current from TEST solution compared to BLANK solution.

IPPM — Contaminant concentration in TEST solution, not considering a dilution factor.

IPPMDF — Contaminant concentration in TEST solution including the dilution factor. The final result.

EQUATIONS TO BE PROCESSED

Given parameters (measured values and scale factors) = IBLNK, IMCAL, IMTST, CS, and DF.

$$ICAL = \frac{(IMCAL - BLNK)}{CS} \qquad (1)$$

$$IMBTST = IMTST - IBLNK \quad (2)$$

$$IPPM = \frac{IMBTST}{ICAL} \quad (3)$$

$$IPPMDF = (IPPM)(DF) \quad (4)$$

$$= \frac{(IMBTST)(DF)}{ICAL} \quad (5)$$

OPERATING PROCEDURE

1. Plug power cable into panel (upper right) and connect to 115V AC.

2. Connect electrode cable to panel (lower left). With electrodes inserted into cell, connect leads to electrodes as follows:

   a. WKG lead to working electrode.

   b. AUX lead to auxiliary (counter) electrode.

   c. REF lead to reference electrode.

The GND lead need not be connected, but <u>should</u> be grounded for optimum results.

3. Set mode switch to the uppermost OFF position.

4. Dial thumbwheel switches to correct date (month/day).

5. Set STANDARD dial to concentration in ppm that will be used for a standard.

6. Turn power ON.

7. Measure blank solution (distilled water + salt + buffer) into cell. Deaerate for about 20 minutes.

8. Set mode switch on BLANK.

9. When ammeter needle is steady, press RUN. Observe three fast preparatory scans, 60-second pause, and one slow measuring scan. The four small lights to the left of the ammeter will light up in succession at the end of each fast scan and at the end of the 60-second pause. At end of run, the printer will print date and the display will show a random number.

10. Turn mode switch counterclockwise to next OFF setting.

11. Add standard PGDN (or other analyte) to blank to yield final concentration equal to setting on STANDARD. Deaerate for about 50 seconds.

12. Turn mode switch to CAL.

13. When ammeter needle is steady, press RUN. Observe three preparatory scans, 60-second pause, and one slow measuring scan. Printer will advance without printing any number.

14. Turn mode switch counterclockwise to next OFF setting.

15. Add salt/buffer to unknown solution, measure solution into cell, and deaerate for about 20 minutes.

16. Turn mode switch to TEST.

17. When ammeter needle is steady, press RUN. Observe three preparatory scans, 60-second pause, and one slow measuring scan. Printer will print unknown concentration in ppm (to one decimal figure). Display will show whole number part of concentration.

18. Turn mode switch to next OFF setting.

19. For any additional unknown solutions, repeat steps 15-18.

20. To abort a run, press RESET. Printer will then print random number.

21. For use in conjunction with an X-Y recorder, make the following connections:

    a. X on voltammeter to (+) input of X on recorder.

    b. Y on voltammeter to (+) input of Y on recorder.

    c. GND on voltammeter to (-) input of Y on recorder.

    d. (-) input of X to (-) input of Y on recorder.

    Recorder settings:

    a. X = 100 mV/min

    b. Y = 1 V/inch for fast scan,

    100 mV/inch for slow scan when concentrations greater than 3 ppm,

    10 mV/min for slow scan when concentrations less than 3 ppm.

REFERENCES

1. Naval Weapons Center. Voltammetric Analysis of Ordnance Materials. Part 1. Detection and Quantitation of Nitrate Esters and Various Nitro Compounds in Water by Voltammetry, by Dwight A. Fine and Melvin H. Miles, China Lake, Calif., NWC, April 1984. 24 pp. (NWC TP 6505, publication UNCLASSIFIED.)

Appendix A

HARDWARE DOCUMENTATION

8085 EDGE CARD SYSTEMS
PLS-858 ONE CARD SYSTEM

The PLS-858 is a complete 8085 microprocessor system on one 4½" x 6½" circuit card. The system provides a 56-pin card edge connector that is similar to the existing Pro-Log PLS-881 microprocessors. The PLS-858 incorporates all the elements of the highly popular PLS-881 and PLS-888 and expands on them. The PLS-858 offers the capability of expanding program memory to 8192 bytes using 2048 byte D2002 PROM (2716 or equivalent). The PLS-858 also comes with 1024 bytes of read/write memory and can be expanded to 2048 bytes simply by *plugging in two additional D1004 RAMs (2114 or equivalent)*. Like the companion PLS cards, the more powerful PLS-858 includes three output ports and two input ports at the card edge, however, I/O can be expanded to eight input and eight output ports with a simple ribbon cable expansion system that accesses the data bus and I/O decoder strobe. The PLS-858 offers 5 external interrupts, a serial input line and a serial output line, 320 nanosecond time states, and single +5V supply operation. To utilize the full power of the 8085 and add versatility to the PLS-858, an interrupt expansion connector is provided.

FEATURES

- **8085 Processor**
- **2K Byte RAM capacity with 1K Included**
- **Sockets for 8K Bytes 2716 EPROM**
- **Crystal Clock**
- **320 Nanosecond State Time**
- **Power-on and External Reset**
- **Three 8-Bit Output Ports**
- **Two 8-Bit Input Ports**
- **External Port Expansion to 16 ports**
- **Five Interrupts**
- **1 Each Serial Input and Output Lines**
- **Program Compatible with 8080 Systems**
- **Single +5V Supply**

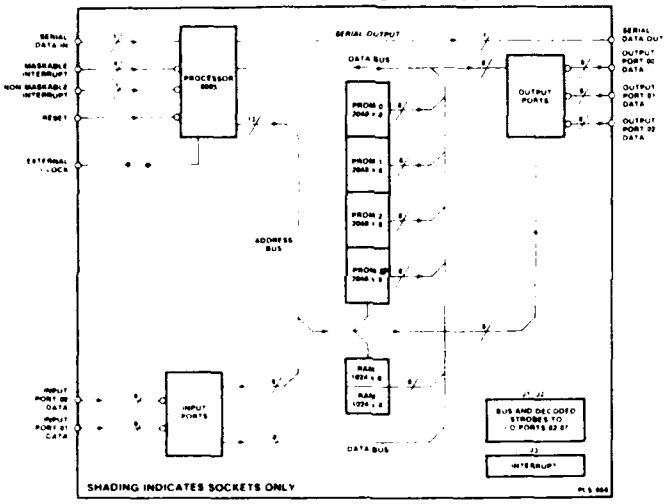

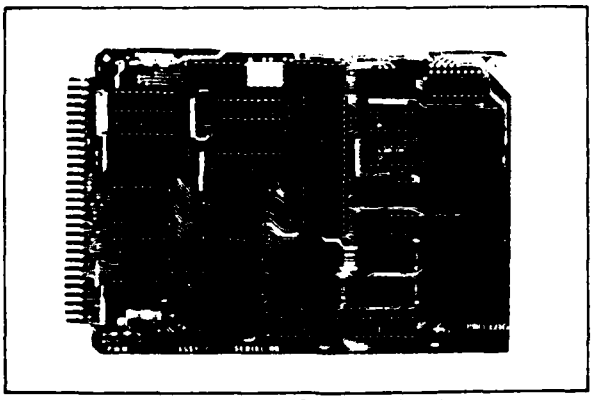

PLS-858 ONE CARD SYSTEM

FIGURE A-1. One Card System Description.

PLS-858 ONE CARD SYSTEM — SPECIFICATIONS

CARD DIMENSIONS

- 4 50 in (11 43 cm) high by 6 50 in (16 51 cm) long
- 0 48 in (1 22 cm) maximum profile thickness
- 0 062 in (0 16 cm) printed circuit board thickness

CARD INCLUDES

- Card ejector
- One 8085 Processor
- 1K 8-bit bytes 2114 RAM and sockets for second 1K bytes
- Four ROM sockets for 2716 PROMs
- Crystal clock circuit and provisions for external clock
- *Power-on and external reset*
- 2 Input ports (8-bit)
- 3 Output ports (8-bit)

INSTRUCTION EXECUTION CAPABILITY

- Executes all of the 8085 Processor instructions
- 0 32 microseconds time state cycle ±0 05% at 25°C ±0 1% 0-55°C
- Instructions require from 4 to 8 time states

MEMORY

- Maximum Access Time 0 450 microseconds
- *PROM 2716 or equivalent*
- RAM 2114 or equivalent

INPUTS (Active low except where noted, loading 1 LSTTL load)

- 16 Data Lines (2 Input Ports)
- Port Expansion Data Bus (J1 active high)
- 5 Interrupt Requests (J3 three at card edge)
- 1 Serial Input Line (active high)
- 1 Reset Control Line
- 1 RDY (active high)

OUTPUTS (Active low except where noted, drive 5 TTL loads)

- 24 Latched Output Data Lines (3 output ports)
- Port Expansion Data Bus (J1, active high)
- 2 System Reset (J2 and card edge)
- 1 Clock Signal
- 1 Serial Output Data (J3, active high)
- *6 Input Port Strobes (J2)*
- 5 Output Port Strobes (J2)

POWER REQUIREMENTS

+VCC +5 volts ±5% at 1 2 A max fully loaded (100 mA per ROM 100 mA per RAM)

GND 0 volts

OPERATING TEMPERATURE RANGE: 0-55°C

CONNECTOR REQUIREMENTS:

56 pin 28 position dual-readout on 0 125 in (0 318 cm) centers

PLS 858 EDGE CONNECTOR PIN LIST

5 VOLTS					5 VOLTS
GROUND					GROUND
SPARE					*SPARE*
IN0-5*					IN1-5*
IN0-6*					IN1-6*
IN0-7*					IN1-7*
IN0-8*					IN1-8*
IN0-4*					IN1-4*
IN0-3*					IN1-3*
IN0-2*					IN1-2*
IN0-1*					IN1-1*
OUT0-1*					OUT0-5*
OUT0-2*					OUT0-6*
OUT0-3*					OUT0-7*
OUT0-4*					OUT0-8*
OUT1-1*					OUT1-5*
OUT1-2*					OUT1-6*
OUT1-3*					OUT1-7*
OUT1-4*					OUT1-8*
OUT2-1*					OUT2-5*
OUT2-2*					OUT2-6*
OUT2-3*					OUT2-7*
OUT2-4*					OUT2-8*
INTA*					IREQ*
NMI*					RDY
RST5					CLR
RESET*					RST*
SOD					SID

I O PORT EXPANSION SOCKETS

J1 DATA

PIN NUMBER	SIGNAL FLOW	SIGNAL	PIN NUMBER	SIGNAL FLOW	SIGNAL
DI-4	IN	16	1	IN	DI-1
DO-2	OUT	15	2	IN	DI-8
DO-4		14	3	OUT	DO-6
DO-1	OUT	13	4	OUT	DO-7
DI-7	IN	12	5	OUT	DO-3
DO-5	OUT	11	6	IN	DI-5
DO-8		10	7	IN	DI-6
DI-3	IN	9	8	IN	DI-2

J2 CONTROL AND POWER

PIN NUMBER	SIGNAL FLOW	SIGNAL	PIN NUMBER	SIGNAL FLOW	SIGNAL
GND		16	1	OUT	GND
IS-2*		15	2		BRS*
IS-3*		14	3	OUT	OS-3*
IS-4*		13	4		OS-4*
IS-5*		12	5	OUT	OS-5*
IS-6*		11	6	OUT	IS-7*
OS-6*	OUT	10	7	OUT	-5 VOLTS
OS-7*	OUT	9	8		-5 VOLTS

J3 INTERRUPTS & MISC

PIN NUMBER	SIGNAL FLOW	SIGNAL	PIN NUMBER	SIGNAL FLOW	SIGNAL
S0					A15
S1					
INTA*					RS5.5
					RS7.5
					NMI*
SOD					
SID					RS6.5
A16					

*Designates Active Low Level Logic

4

102694 3 78

PRO-LOG CORPORATION 2411 Garden Road Monterey California 93940 Telephone (408) 372-4593 TWX 910-360-7082

FIGURE A-2. One Card System Specifications.

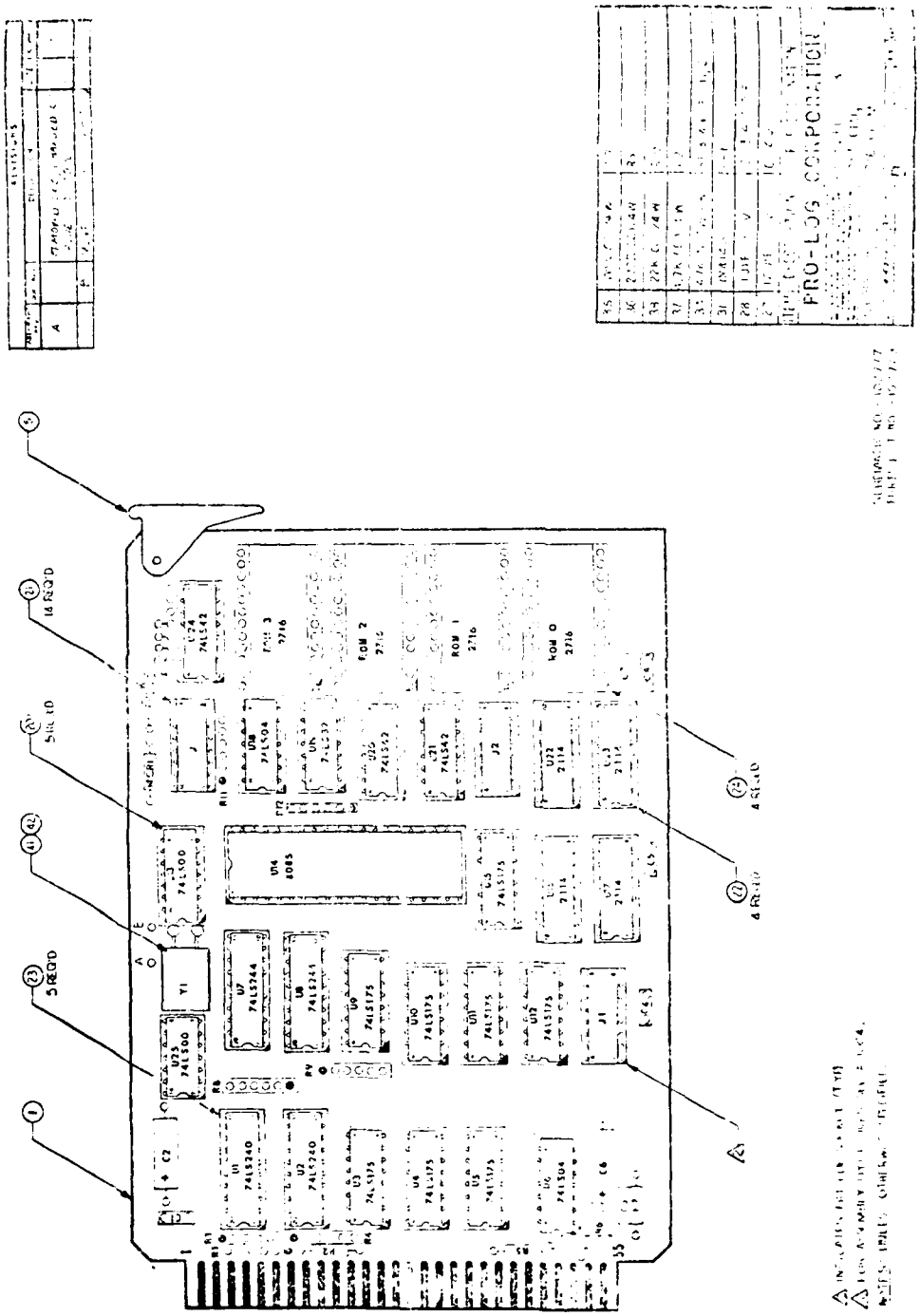

FIGURE A-3. Diagram of PLS-858 Microprocessor Circuit Card.

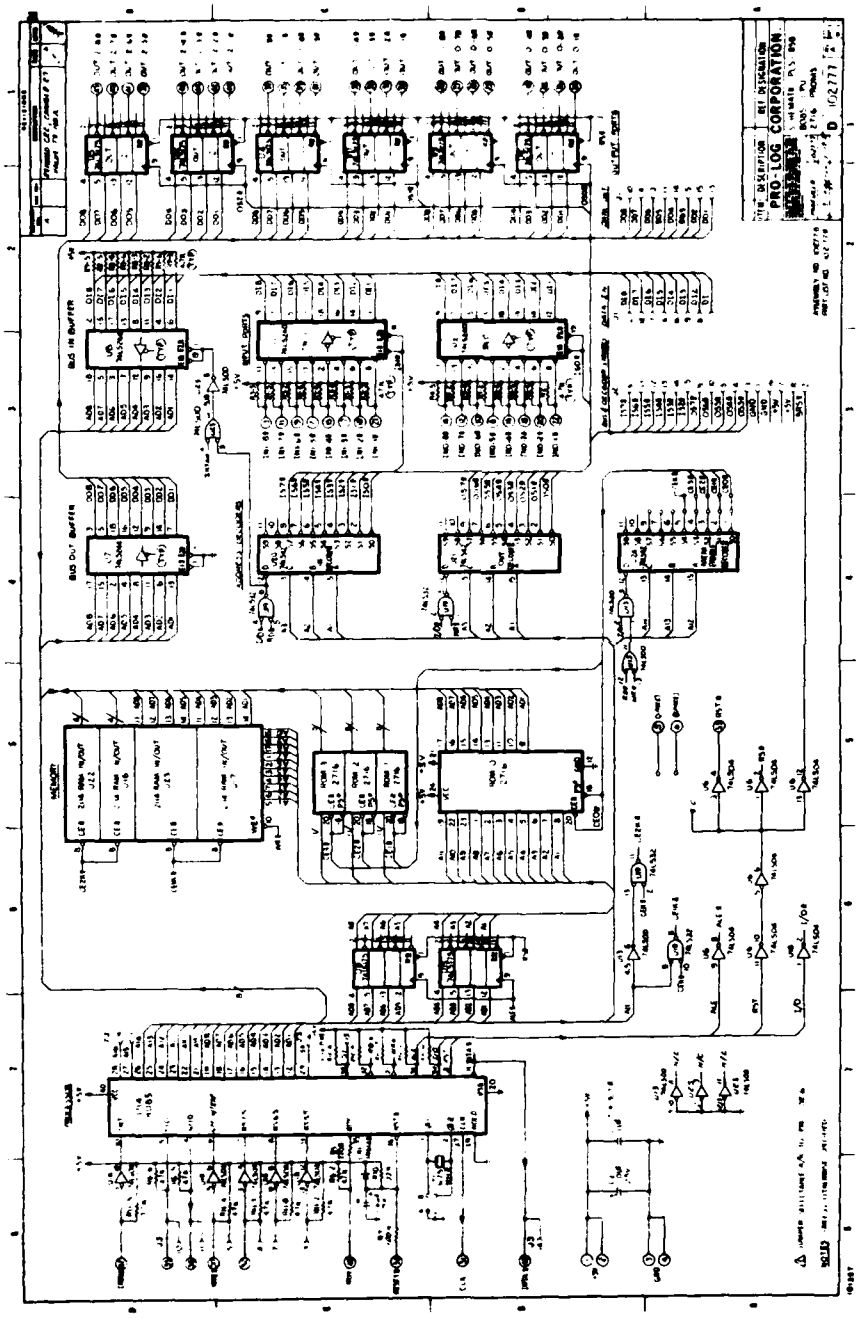

FIGURE A-4. Schematic of PLS-858 Microprocessor Circuit Card.

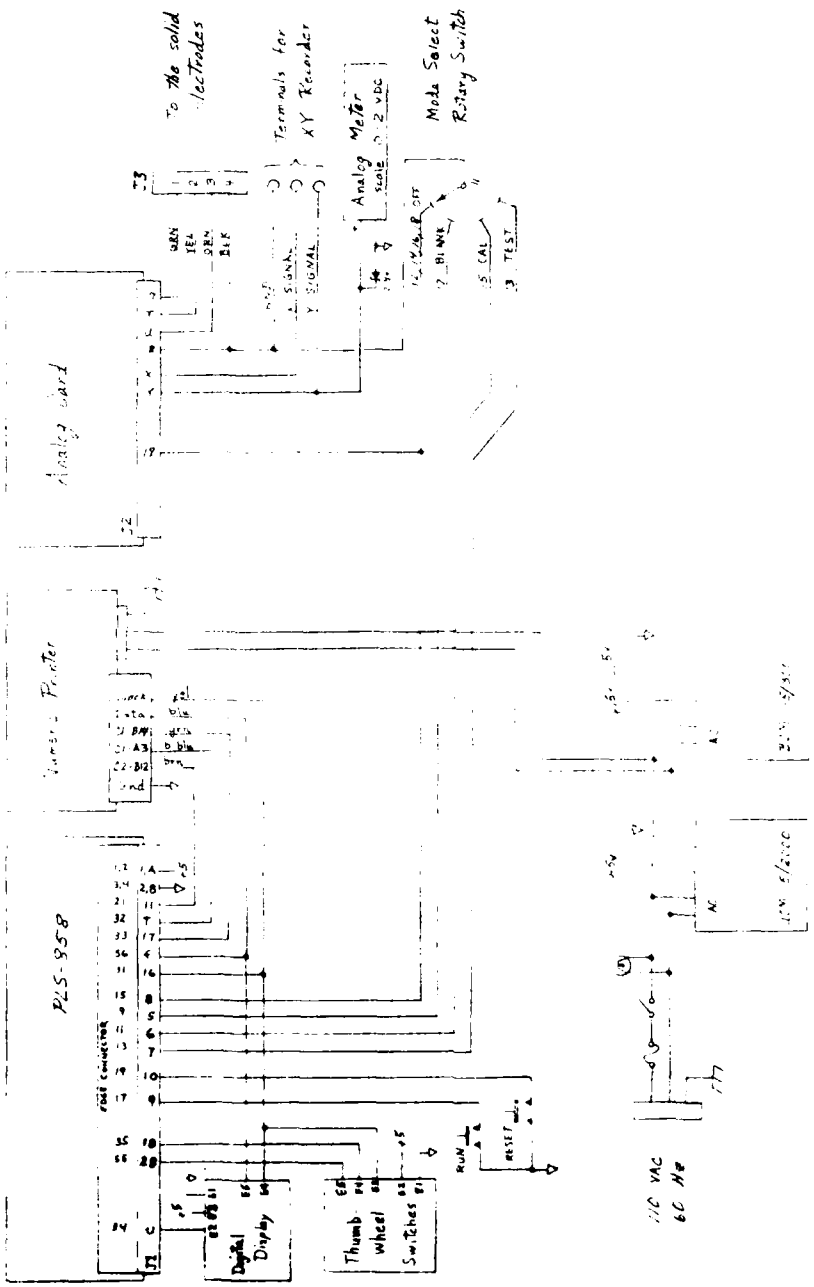

FIGURE A-5. Chassis Wiring Diagram, Digital Voltammeter.

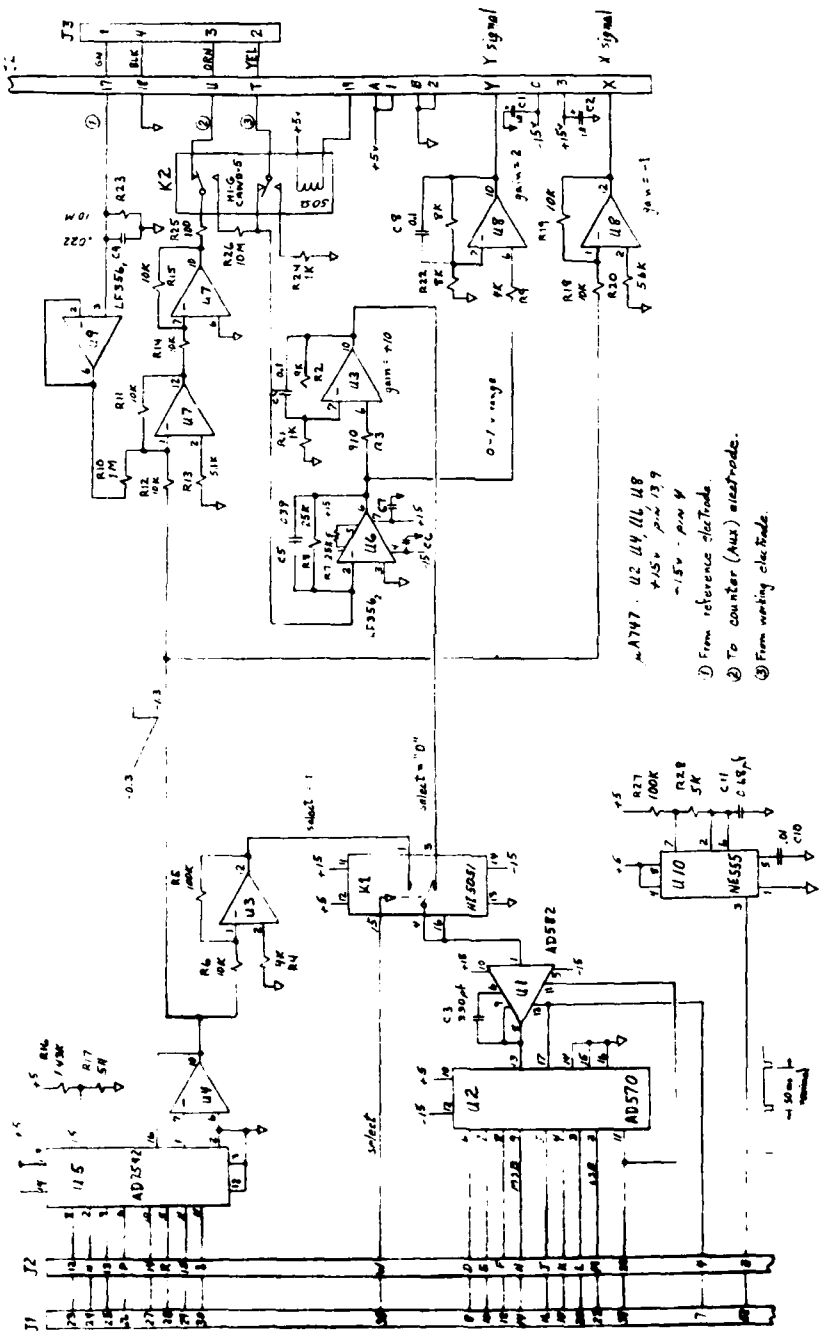

FIGURE A-6. Analog Card Schematic, Digital Voltammeter System.

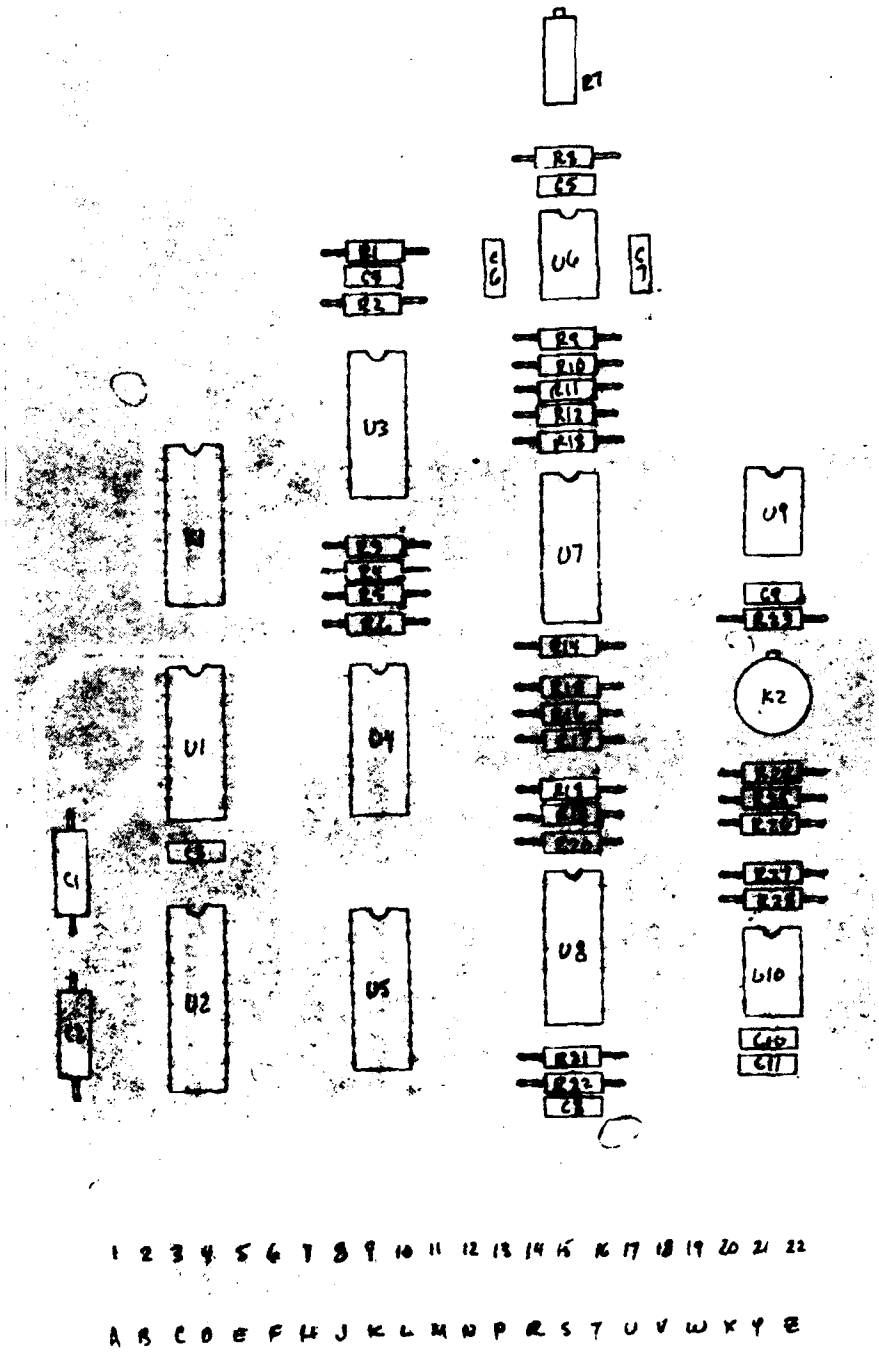

FIGURE A-7. Analog Card Component Side, Digital Voltammeter.

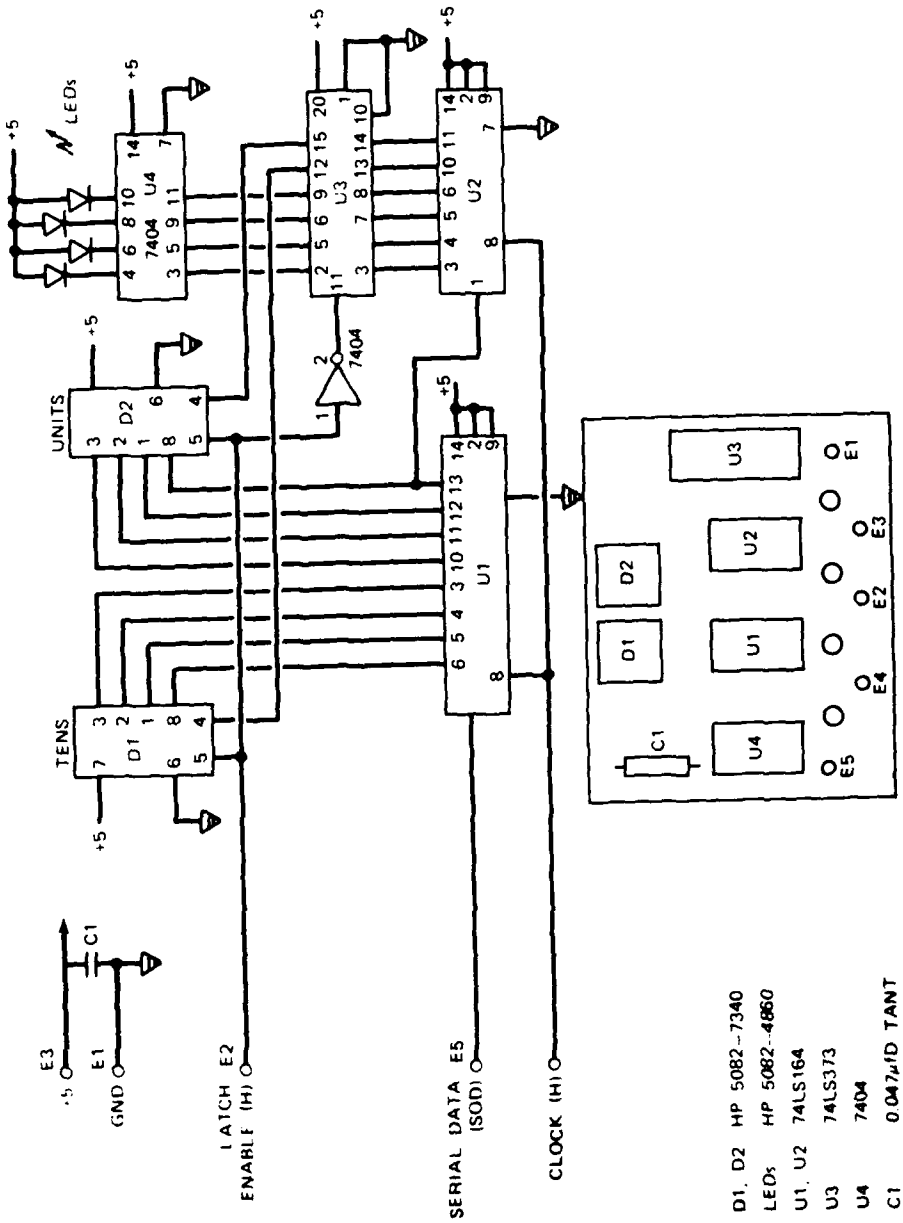

FIGURE A-8. Digital Display Card, Digital Voltammeter.

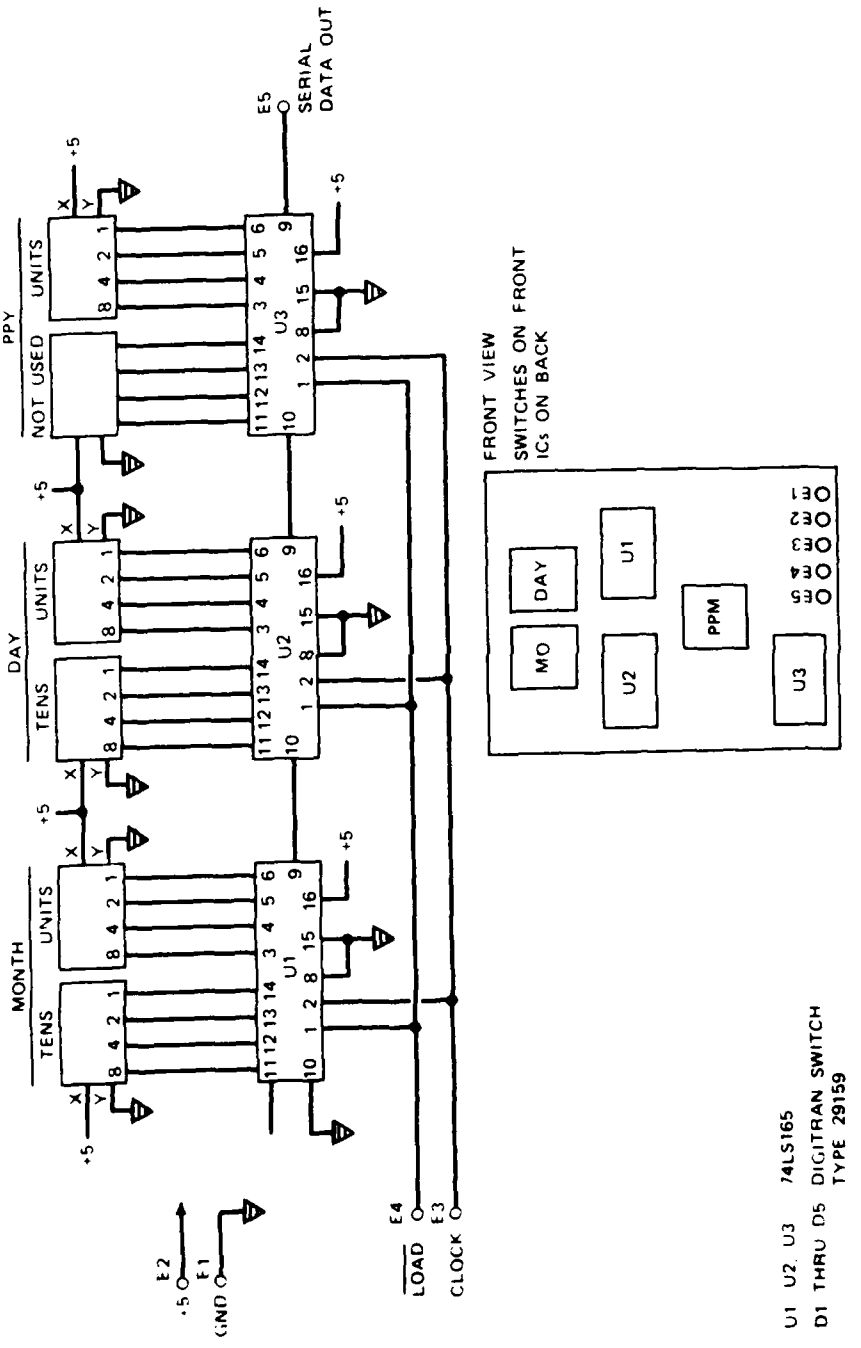

FIGURE A-9. Thumbwheel Switches Card Schematic.

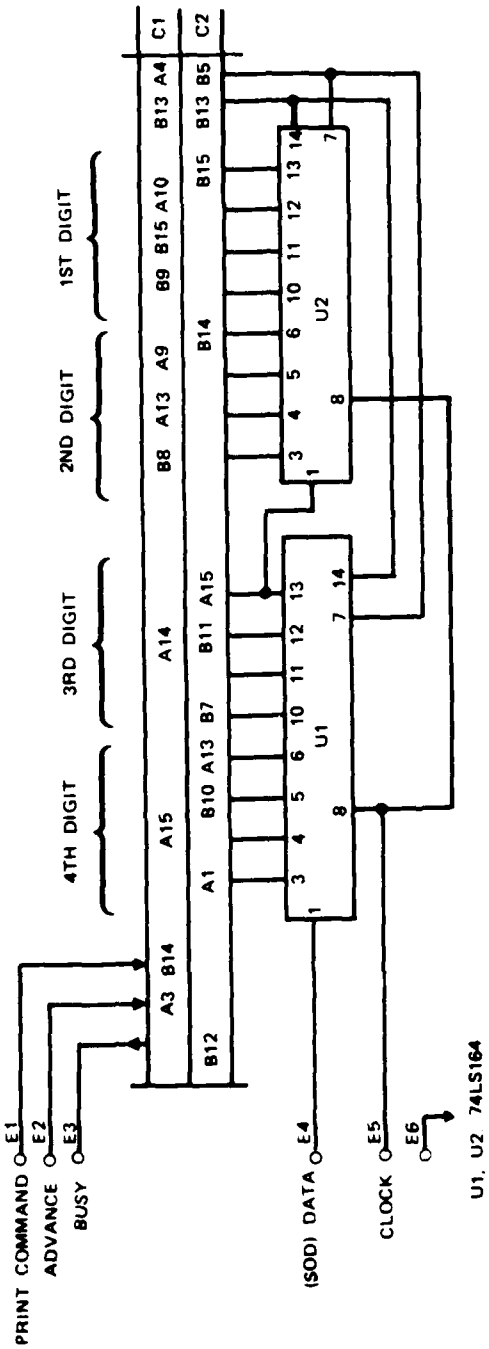

FIGURE A-10. Numeric Printer Interface Schematic, Digital Voltammeter.

INPUT/OUTPUT CONNECTIONS

DPP-07 PRINTER PINOUT

Refer to the drawings on the bottom of page 6.

Connecter Pinouts Are Shown As Viewed From Rear Of Printer

	CONNECTER C1 A	CONNECTER C1 B		CONNECTER C2 A	CONNECTER C2 B	
1.	Dec Pt .0000	Sign "—"	1.	BCD 8,000	BCD 800,000	1.
2.	Chg. Busy Polarity	Dec Pt .00000	2.		BCD 80,000	2.
3.	No Print Advance	Dec Pt .000000	3.			3.
4.	Logic & Pwr. Gnd.	Leading Zero Suppress	4.		End of Paper	4.
5.	Sign "1"		5.		Logic & Pwr. Gnd.	5.
6.	Dec Pt .0	Dec Pt .000	6.		Enable Print Test	6.
7.	Dec Pt .00	Chg. Print Polarity	7.		BCD 800	7.
8.	BCD 400,000	BCD 80	8.	BCD 200,000	BCD 20,000	8.
9.	BCD 20	BCD 8	9.			9.
10.	BCD 2	BCD 40,000	10.		BCD 2,000	10.
11.	BCD 100,000	Chg. Data Polarity	11.		BCD 200	11.
12.	BCD 10,000		12.		Busy	12.
13.	BCD 40	+5V Logic Power	13.	BCD 1,000	+5V Logic Power	13.
14.	BCD 400	Print Command	14.		BCD 10	14.
15.	BCD 4,000	BCD 4	15.	BCD 100	BCD 1	15.

NOTES

1. +5V contacts (C1-B13 & C2-B13) are internally connected
2. Ground contacts (C1-A4 & C2-B5) are internally connected
3. On DC Models, +5V Contacts (C1-B13 & C2-B13) are used for logic power input (5V ±2% @ .3A, logic spikes less than 50mV, pk-pk). These +5V logic power contacts may be connected to the high current +5V spade terminal if external regulation will hold +5 ± .25VDC at the printer while printing. (Current 8 Amps max)
4. On AC Models, +5V contacts (C1-B13 & C2-B13) will provide +5V power out at 100mA max.

GROUND C1-B11 AND C1-B7 FOR POSITIVE TRUE INPUTS.

BCD INPUTS Binary Coded Decimal inputs are shown cross-referenced to their corresponding connectors and pins.

For other print formats (see ordering guide, pg. 12) blanked columns will appear between digits shown

CONNECTOR	100,000's DIGIT 6				10,000's DIGIT 5				1,000's DIGIT 4				100's DIGIT 3				10's DIGIT 2				1's DIGIT 1				CONNECTOR
	8	4	2	1	8	4	2	1	8	4	2	1	8	4	2	1	8	4	2	1	8	4	2	1	
C1		A 5		A 11		B 10		A 12		A 15				A 14			B 5	A 13	A 9		B 9	B 15	A 10		C1
C2	B 1		A 8		B 2		B 5		A 1		B 10	A 13	B 7		B 11	A 15			B 14				B 15		C2

* Sign located here on type 2 print format

NOTE: PULLUPS PROVIDED ON ALL LOGIC CONNECTIONS. CHECK RESULTANT CODING ON UNCONNECTED TERMINALS.

FIGURE A-11. Input/Output Connections for Printer.

Appendix B

PRINTOUT OF SOFTWARE PROGRAM

```
Tektronix  8080/8085 ASM V3.3                                    Page     1

00001                          SECTION MAIN,ABSOLUTE
                               GLOBAL  BSFLNE,FSCAN,PAUSE,SSCAN,LED,TUMHL,PRNTL,WAIT5
00003                          GLOBAL  LEDGET,LEDLTS,DECCS,DECDAY,DECMTH,PFIELD,FSCD
00004                          GLOBAL  DV1616,TEMP,COUNT
00005       2000               ORG     2000H
00006 2000  0001       IBLANK  BLOCK   1
00007 2001  0001       ICAL    BLOCK   1
00008 2002  0002       ITEST   BLOCK   2
00009 2004  0001       LEDDGT  BLOCK   1
00010 2005  0001       LEDLTS  BLOCK   1
00011 2006  0001       CS      BLOCK   1
00012 2007  0001       DECCS   BLOCK   1
00013 2008  0001       DECDAY  BLOCK   1
00014 2009  0001       DECMTH  BLOCK   1
00015 200A  0002       PFIELD  BLOCK   2
00016 200C  0002       TEMP    BLOCK   2
00017 200E  0001       COUNT   BLOCK   1
00018       0000               ORG     0000H
00019 0000  F3                 DI
00020 0001  31FF23             LXI     SP,23FFH
00021 0004  3E84               MVI     A,0B4H  ;SET MUX ADDRESS
00022 0006  D301               OUT     1
00023 0008  3E1B               MVI     A,1BH
00024 000A  30                 SIM
00025 000B  CD0000  )          CALL    BSFLNE  ;INITIALIZE ANALOG DRIVE VOLTAGE
00026 000E  3E00               MVI     A,00H   ;INITIALIZE LED DISPLAYS
00027 0010  320420             STA     LEDDGT
00028 0013  3E0C               MVI     A,0CH
00029 0015  320520             STA     LEDLTS
00030 0018  CD0000  )          CALL    LED
00031 001B  DB01       RUNT    IN      1
00032 001D  E604               ANI     04H
00033 001F  CA1B00             JZ      RUNT
00034 0022  1638               MVI     D,38H
00035 0024  1EB0       RUNT1   MVI     E,0B0H
00036 0026  1D         RUNT2   DCR     E
00037 0027  C22600             JNZ     RUNT2
00038 002A  15                 DCR     D
00039 002B  C22400             JNZ     RUNT1
00040 002E  DB01               IN      1
00041 0030  E604               ANI     04H
00042 0032  CA1B00             JZ      RUNT
00043 0035  C33D00             JMP     BEGIN
00044       003C               ORG     003CH
00045 003C  E9                 PCHL
00046 003D  3E00       BEGIN   MVI     A,00H   ;RESET LED DISPLAYS
00047 003F  320420             STA     LEDDGT
00048 0042  3E0C               MVI     A,0CH
00049 0044  320520             STA     LEDLTS
00050 0047  CD0000  )          CALL    LED
00051 004A  210000  )          LXI     H,WAIT5 ;SET WAIT VECTOR
00052 004D  0600               MVI     B,00H
00053 004F  FB         WLOOP1  EI              ;WAIT 5 SECONDS
```

```
00054 0050 20                RIM
00055 0051 E604              ANI     04H
00056 0053 CA4F00            JZ      WLOOP1
00057 0056 3E1B              MVI     A,1BH
00058 0058 30                SIM
00059 0059 210000  )         LXI     H,FSCAN ;SET FAST SCAN VECTOR
00060 005C 01003B            LXI     B,3B00H
00061 005F FB        FLOOP1  EI              ;FIRST FAST SCAN
00062 0060 20                RIM
00063 0061 E604              ANI     04H
00064 0063 CA5F00            JZ      FLOOP1
00065 0066 CD0000  )         CALL    BSELNE
00066 0069 3E8C              MVI     A,8CH   ;TURN ON LED #1
00067 006B 320520            STA     LEDLTS
00068 006E CD0000  )         CALL    LED
00069 0071 3E1B              MVI     A,1BH
00070 0073 30                SIM
00071 0074 210000  )         LXI     H,WAIT5 ;SET WAIT VECTOR
00072 0077 0600              MVI     B,00H
00073 0079 FB        WLOOP2  EI              ;WAIT 5 SECONDS
00074 007A 20                RIM
00075 007B E604              ANI     04H
00076 007D CA7900            JZ      WLOOP2
00077 0080 3E1B              MVI     A,1BH
00078 0082 30                SIM
00079 0083 210000  )         LXI     H,FSCAN ;SET FAST SCAN VECTOR
00080 0086 01003B            LXI     B,3B00H
00081 0089 FB        FLOOP2  EI              ;SECOND FAST SCAN
00082 008A 20                RIM
00083 008B E604              ANI     04H
00084 008D CA8900            JZ      FLOOP2
00085 0090 CD0000  )         CALL    BSELNE
00086 0093 3ECC              MVI     A,0CCH  ;TURN ON LED #2
00087 0095 320520            STA     LEDLTS
00088 0098 CD0000  )         CALL    LED
00089 009B 3E1B              MVI     A,1BH
00090 009D 30                SIM
00091 009E 210000  )         LXI     H,WAIT5 ;SET WAIT VECTOR
00092 00A1 0600              MVI     B,00H
00093 00A3 FB        WLOOP3  EI              ;WAIT 5 SECONDS
00094 00A4 20                RIM
00095 00A5 E604              ANI     04H
00096 00A7 CAA300            JZ      WLOOP3
00097 00AA 3E1B              MVI     A,1BH
00098 00AC 30                SIM
00099 00AD 210000  )         LXI     H,FSCAN ;SET FAST SCAN VECTOR
00100 00B0 01003B            LXI     B,3B00H
00101 00B3 FB        FLOOP3  EI              ;THIRD FAST SCAN
00102 00B4 20                RIM
00103 00B5 E604              ANI     04H
00104 00B7 CAB300            JZ      FLOOP3
00105 00BA CD0000  )         CALL    BSELNE
00106 00BD 3EEC              MVI     A,0ECH  ;TURN ON LED #3
```

```
00107 00BF 320520          STA     LEDLTS
00108 00C2 CD0000  )       CALL    LED
00109 00C5 210000  )       LXI     H,PAUSE ;SET PAUSE VECTOR
00110 00C8 010000          LXI     B,0000H
00111 00CB 3E1B            MVI     A,1BH
00112 00CD 30              SIM
00113 00CE FB        PLOOP EI
00114 00CF 20              RIM
00115 00D0 E604            ANI     04H
00116 00D2 CACE00          JZ      PLOOP
00117 00D5 3EFC            MVI     A,0FCH  ;TURN ON LED #4
00118 00D7 320520          STA     LEDLTS
00119 00DA CD0000  )       CALL    LED
00120 00DD 210000  )       LXI     H,SSCAN ;SET SLOW SCAN VECTOR
00121 00E0 01003B          LXI     B,3B00H
00122 00E3 110073          LXI     D,7300H
00123 00E6 3E1B            MVI     A,1BH
00124 00E8 30              SIM
00125 00E9 FB        SLOOP EI
00126 00EA 20              RIM
00127 00EB E604            ANI     04H
00128 00ED CAE900          JZ      SLOOP
00129 00F0 CD0000  )       CALL    BSELNE
00130 00F3 F3              DI
00131 00F4 3E1B            MVI     A,1BH
00132 00F6 30              SIM
00133 00F7 DB01            IN      1       ;TEST FOR OFF MODE
00134 00F9 2F              CMA
00135 00FA E608            ANI     08H
00136 00FC CA1B00          JZ      RUNT
00137 00FF DB01            IN      1       ;TEST FOR BLANK MODE
00138 0101 2F              CMA
00139 0102 E620            ANI     20H
00140 0104 CAA201          JZ      BLANK
00141 0107 DB01            IN      1       ;TEST FOR CALIBRATE MODE
00142 0109 2F              CMA
00143 010A E640            ANI     40H
00144 010C CA7E01          JZ      CAL
00145 010F C32201          JMP     TEST
00146 0112 0F1F1F2F   FR   BYTE    0FH,1FH,1FH,2FH
00147 0116 3F3F4F4F        BYTE    3FH,3FH,4FH,4FH
00148 011A 5F6F6F7F        BYTE    5FH,6FH,6FH,7FH
00149 011E 8F8F9F9F        BYTE    8FH,8FH,9FH,9FH
00150 0122 7B         TEST MOV     A,E
00151 0123 210020          LXI     H,IBLANK
00152 0126 96              SUB     M
00153 0127 00              NOP             ;WAS  DILUTION FACTOR (DF)
00154 0128 57              MOV     D,A
00155 0129 1E00            MVI     E,00H   ;DIVIDEND IS READY
00156 012B 210120          LXI     H,ICAL
00157 012E 4E              MOV     C,M
00158 012F 0600            MVI     B,00H   ;DIVISOR IS READY - ICAL (8 BIT)
00159 0131 CD0000  )       CALL    DV1616
```

```
Tektronix  8080/8085 ASM V3.3                                    Page     4

00160 0134 7B                 MOV     A,E
00161 0135 320320             STA     ITEST+1 ;STORES HEX FRACTNL VALUE
00162 0138 7A                 MOV     A,D
00163 0139 320220             STA     ITEST   ;STORES INTEGER VALUE
00164 013C CD0000  )          CALL    DEC     ;CONVERTS INTEGER INTO BCD
00165 013F 00                 NOP
00166 0140 320420             STA     LEDDGT
00167 0143 3EF0               MVI     A,0F0H
00168 0145 320520             STA     LEDLTS
00169 0148 CD0000  )          CALL    LED
00170 014B 3EFF               MVI     A,0FFH
00171 014D 320A20             STA     PFIELD
00172 0150 320B20             STA     PFIELD+1
00173 0153 00                 NOP
00174 0154 CD0000  )          CALL    PRNTL   ;ADVANCE PAPER
00175 0157 3A0420             LDA     LEDDGT
00176 015A FE0A               CPI     0AH
00177 015C D26101             JNC     TEST1
00178 015F F6F0               ORI     0F0H
00179 0161 320A20     TEST1   STA     PFIELD  ;INTEGER IS READY
00180 0164 3A0320             LDA     ITEST+1 ;BEGIN FRCTNL PRCSSG
00181 0167 0F                 RRC
00182 0168 0F                 RRC
00183 0169 0F                 RRC
00184 016A 0F                 RRC
00185 016B E60F               ANI     0FH
00186 016D 1600               MVI     D,00H
00187 016F 5F                 MOV     E,A
00188 0170 211201             LXI     H,FR
00189 0173 19                 DAD     D
00190 0174 7E                 MOV     A,M
00191 0175 320B20             STA     PFIELD+1 ;END FRCTNL PROCSSG
00192 0178 CD0000  )          CALL    PRNTL   ;PRINT RESULT
00193 017B C31600             JMP     RUNT
00194 017E 7B         CAL     MOV     A,E
00195 017F 210020             LXI     H,IBLANK
00196 0182 96                 SUB     M
00197 0183 4F                 MOV     C,A
00198 0184 0600               MVI     B,00H
00199 0186 210720             LXI     H,DECCS ;DECCS BEING USED
00200 0189 5E                 MOV     E,M     ;CS = SETTING ON FRONT PANEL
00201 018A CD0000  )          CALL    DIV
00202 018D 7C                 MOV     A,H
00203 018E 320120             STA     ICAL
00204 0191 CD0000  )          CALL    DEC
00205 0194 320420             STA     LEDDGT
00206 0197 3EF0               MVI     A,0F0H
00207 0199 320520             STA     LEDLTS
00208 019C CD0000  )          CALL    LED
00209 019F C31600             JMP     RUNT
00210 01A2 7B         BLANK   MOV     A,E
00211 01A3 320020             STA     IBLANK
00212 01A6 CD0000  )          CALL    DEC
```

```
00213 01A9 320420          STA     LEDDGT
00214 01AC 3EFC            MVI     A,0FCH
00215 01AE 320520          STA     LEDLTS
00216 01B1 CD0000  )       CALL    LED
00217 01B4 CD0000  )       CALL    THMWHL
00218 01B7 3A0920          LDA     DECMTH
00219 01BA 320A20          STA     PFIELD
00220 01BD 3A0B20          LDA     DECDAY
00221 01C0 320B20          STA     PFIELD+1
00222 01C3 CD0000  )       CALL    PRNTL
00223 01C6 C31B00          JMP     RUNT
00224                ;
00225                      SECTION MUL
00226                ;MULTIPLIER INTO REG B
00227                ;MULTIPLICAN INTO REG C
00228                ;PRODUCT IS RETURNED IN REGS D AND E
00229 0000 1600            MVI     D,00H
00230 0002 1E00            MVI     E,00H
00231 0004 78        MUL2  MOV     A,E
00232 0005 81              ADD     C
00233 0006 D20A00  )       JNC     MUL1
00234 0009 14              INR     D
00235 000A 5F        MUL1  MOV     E,A
00236 000B 05              DCR     B
00237 000C C20400  )       JNZ     MUL2
00238 000F C9              RET
00239                ;
00240                      SECTION DIV
00241                ;DIVIDEND INTO REGS B AND C
00242                ;DIVISOR INTO REG E
00243                ;QUOTIENT IS RETURNED IN REG H
00244 0000 2600            MVI     H,00H
00245 0002 7B              MOV     A,E
00246 0003 2F              CMA
00247 0004 5F              MOV     E,A
00248 0005 16FF            MVI     D,0FFH
00249 0007 13              INX     D
00250 0008 79        DIV3  MOV     A,C       ;ADD LOW BYTES
00251 0009 83              ADD     E
00252 000A D20E00  )       JNC     DIV1
00253 000D 14              INR     D
00254 000E 4F        DIV1  MOV     C,A       ;ADD HIGH BYTES
00255 000F 78              MOV     A,B
00256 0010 82              ADD     D
00257 0011 FA1F00  )       JM      DIV2      ;TEST FOR SIGN CHANGE
00258 0014 47              MOV     B,A
00259 0015 24              INR     H
00260 0016 7C              MOV     A,H       ;TEST FOR DIVIDEND OVERRUN
00261 0017 FE63            CPI     63H
00262 0019 CA1F00  )       JZ      DIV2
00263 001C C30800  )       JMP     DIV3
00264 001F C9        DIV2  RET
00265                ;
```

Tektronix 8080/8085 ASM V3.3 Page 6

```
00266                          SECTION DEC
00267                   ;VALUE IN REG A IS CONVERTED FROM HEXADECIMAL TO DECIMAL
00268 0000 FE63                CPI     63H
00269 0002 DA3800  >           JC      DEC3
00270 0005 3E99                MVI     A,99H
00271 0007 C9                  RET
00272 0008 FE0A         DEC3   CPI     0AH
00273 000A D20E00  >           JNC     DEC2
00274 000D C9                  RET
00275 000E 1E00         DEC2   MVI     E,00H
00276 0010 D60A         DEC1   SUI     0AH
00277 0012 1C                  INR     E
00278 0013 FE0A                CPI     0AH
00279 0015 D21000  >           JNC     DEC1
00280 0018 57                  MOV     D,A
00281 0019 7B                  MOV     A,E
00282 001A 07                  RLC
00283 001B 07                  RLC
00284 001C 07                  RLC
00285 001D 07                  RLC
00286 001E 82                  ADD     D
00287 001F C9                  RET
00288
```

```
Tektronix 8080/8085 ASM V3.3  Symbol Table                Page    7

Scalars

   A ------ 0007          B ------ 0000          C ------ 0001          D ------ 0002          E ------ 0003
   H ------ 0004          L ------ 0005          M ------ 0006          PSW ---- 0006          SP ----- 0006

DEC Section (0020)

   DEC1 --- 0010          DEC2 --- 000E          DEC3 --- 0008

DIV Section (0020)

   DIV1 --- 000E          DIV2 --- 001F          DIV3 --- 0008

MAIN Section Absolute (200F)

   BEGIN -- 003D          BLANK -- 01A2          CAL ---- 017E          COUNT -- 200F G        CS ----- 2006
   DECCS -- 2007 G        DECDAY - 2008 G        DECMTH - 2009 G        FLOOP1 - 005F          FLOOP2 - 0039
   FLOOP3 - 0083          FR ----- 0112          IBLANK - 2000          ICAL --- 2001          ITEST -- 2002
   LEDDGT - 2004 G        LEDLTS - 2005 G        PFIELD - 200A G        PLOOP -- 00CE          RUNT --- 001B
   RUNT1 -- 0024          RUNT2 -- 0026          SLOOP -- 0029          TEMP --- 200C G        TEST --- 0122
   TEST1 -- 0161          WLOOP1 - 004F          WLOOP2 - 0079          WLOOP3 - 00A3

MUL Section (0010)

   MUL1 --- 000A          MUL2 --- 0004

BSELNE Unbound Global

BV1616 Unbound Global

FSCAN Unbound Global

FSCD Unbound Global

LED Unbound Global

PAUSE Unbound Global

PRNTL Unbound Global

SSCAN Unbound Global

THMWHL Unbound Global

WAIT5 Unbound Global


  288 Source Lines     288 Assembled Lines   14347 Bytes available
          ))) No assembly errors detected (((
```

```
00001                          SECTION BSFLNE
00002                    ;SETS ANALOG OUTPUT TO .3 VOLTS
00003 0000 3EDF                MVI     A.0DFH
00004 0002 D300                OUT     0
00005 0004 3EFF                MVI     A.0FFH
00006 0006 D300                OUT     0
00007 0008 3EDF                MVI     A.0DFH
00008 000A D300                OUT     0
00009 000C 3E94                MVI     A.94H
00010 000E D300                OUT     0
00011 0010 3E84                MVI     A.0B4H
00012 0012 D300                OUT     0
00013 0014 3E94                MVI     A.94H
00014 0016 D300                OUT     0
00015 0018 3E5C                MVI     A.5CH
00016 001A D300                OUT     0
00017 001C 3E7C                MVI     A.7CH
00018 001E D300                OUT     0
00019 0020 3E5C                MVI     A.5CH
00020 0022 D300                OUT     0
00021 0024 3E1F                MVI     A.1FH
00022 0026 D300                OUT     0
00023 0028 3E3F                MVI     A.3FH
00024 002A D300                OUT     0
00025 002C C9                  RET
00026                    ;
00027                          SECTION FSCAN
00028                          GLOBAL  FSCD
00029                    ;GENERATES RAMP OUTPUT FROM STARTING VALUE IN REGS B AND C
00030                    ;RAMP UP IN 20 SECONDS, DOWN IN 20 SECONDS
00031 0000 F5                  PUSH    PSW
00032 0001 3EDF                MVI     A.0DFH
00033 0003 D300                OUT     0
00034 0005 79                  MOV     A.C     ;INCREMENT COUNTER
00035 0006 CE7E                ACI     7EH
00036 0008 D20C00  )           JNC     ZOT
00037 000B 04                  INR     B
00038                    ;  JZ   KILLF   TEST FOR END   V 3
00039 000C 4F            ZOT   MOV     C,A
00040 000D 78                  MOV     A,B
00041 000E FEEC                CPI     0ECH    ;M S
00042 0010 79                  MOV     A,C
00043 0011 DA1700  )           JC      FOUT
00044 0014 C35700  )           JMP     KILLF   ;PEAK AT 1.2V (EC30)
00045 0017 4F            FOUT  MOV     C,A     ;OUTPUT LOWER
00046 0018 1F                  RAR
00047 0019 1F                  RAR
00048 001A 1F                  RAR
00049 001B 1F                  RAR
00050 001C E60F                ANI     0FH
00051 001E 2F                  CMA
00052 001F D300                OUT     0
00053 0021 E6DF                ANI     0DFH
```

```
Tektronix  8080/8085 ASM V3.3                                    Page     2

00054 0023 D300              OUT     0
00055 0025 3E9F              MVI     A,9FH
00056 0027 D300              OUT     0
00057 0029 78                MOV     A,B       ;OUTPUT MIDDLE
00058 002A E60F              ANI     0FH
00059 002C F640              ORI     40H
00060 002E 2F                CMA
00061 002F D300              OUT     0
00062 0031 E6DF              ANI     0DFH
00063 0033 D300              OUT     0
00064 0035 3E5F              MVI     A,5FH
00065 0037 D300              OUT     0
00066 0039 78                MOV     A,B       ;OUTPUT UPPER
00067 003A 1F                RAR
00068 003B 1F                RAR
00069 003C 1F                RAR
00070 003D 1F                RAR
00071 003E E60F              ANI     0FH
00072 0040 F680              ORI     80H
00073 0042 2F                CMA
00074 0043 D300              OUT     0
00075 0045 E6DF              ANI     0DFH
00076 0047 D300              OUT     0
00077 0049 3E1F              MVI     A,1FH
00078 004B D300              OUT     0
00079 004D 3E3F              MVI     A,3FH     ;LATCH OUTPUT
00080 004F D300              OUT     0
00081 0051 F3                DI                ;RESET INTERRUPT
00082 0052 3E10              MVI     A,10H
00083 0054 30                SIM               ;CLEAR THE RST 7.5 LATCH
00084 0055 F1                POP     PSW
00085 0056 C9                RET
00086 0057 3E1B      KILLF   MVI     A,1BH
00087 0059 30                SIM               ;RESET THE RST 7.5 LATCH
00088 005A 216300  )         LXI     H,FSCD    ;SET FAST SCAN RETURN VECTOR
00089                                          ;20 SEC RAMP BACK TO INITIAL V.
00090 005D 0130EC            LXI     B,0EC30H          ;PEAK AT 1.2V
00091 0060 C36400  )         JMP     FSCD1
00092 0063 F5        FSCD    PUSH    PSW
00093 0064 79        FSCD1   MOV     A,C
00094 0065 D67E              SUI     07EH
00095 0067 D26B00  )         JNC     HERR      ;SUBTRACT  07E CHUNKS
00096 006A 05                DCR     B         ;FROM REG B-C UNTIL
00097 006B 4F        HERR    MOV     C,A       ;REG B EQUALS 3B
00098 006C 78                MOV     A,B
00099 006D D600              SUI     00H
00100 006F 47                MOV     B,A
00101 0070 FE3B              CPI     03BH
00102 0072 DA7900  )         JC      KILL2
00103 0075 79                MOV     A,C
00104 0076 C31700  )         JMP     FOUT
00105 0079 3E0F      KILL2   MVI     A,0FH     ;SET END INDICATOR
00106 007B 30                SIM               ;DISABLE RST 7.5 INTERRUPT
```

```
Tektronix  8080/8085 ASM V3.3                                    Page     3

00107 007C F1                 POP     PSW
00108 007D C9                 RET
00109                 ;
00110                         SECTION WAITS
00111                 ;5 SECOND WAIT ROUTINE
00112 0000 F5                 PUSH    PSW
00113 0001 78                 MOV     A,B     ;INCREMENT COUNTER
00114 0002 CE02               ACI     02H
00115 0004 FEC8               CPI     0C8H    ;TEST FOR DONE
00116 0006 CA1000  )          JZ      KILLW
00117 0009 47                 MOV     B,A
00118 000A F3                 DI              ;RESET INTERRUPT
00119 000B 3E10               MVI     A,10H
00120 000D 30                 SIM
00121 000E F1                 POP     PSW
00122 000F C9                 RET
00123 0010 3E0F       KILLW   MVI     A,0FH   ;SET END INDICATOR
00124 0012 30                 SIM
00125 0013 F1                 POP     PSW
00126 0014 C9                 RET
00127                 ;
00128                         SECTION PAUSE
00129                 ;60 SECOND WAIT ROUTINE
00130 0000 F5                 PUSH    PSW
00131 0001 79                 MOV     A,C     ;INCREMENT COUNTER
00132 0002 CE37               ACI     37H
00133 0004 D20800  )          JNC     PCONT
00134 0007 04                 INR     B
00135 0008 CA1200  )          JZ      KILLP   ;TEST FOR END
00136 000B 4F         PCONT   MOV     C,A
00137 000C F3                 DI              ;RESET INTERRUPT
00138 000D 3E10               MVI     A,10H
00139 000F 30                 SIM
00140 0010 F1                 POP     PSW
00141 0011 C9                 RET
00142 0012 3E0F       KILLP   MVI     A,0FH   ;SET END INDICATOR
00143 0014 30                 SIM
00144 0015 F1                 POP     PSW
00145 0016 C9                 RET
00146                 ;
00147                         SECTION SSCAN
00148                 ;GENERATES RAMP OUTPUT FROM STARTING VALUE IN REGS B AND C
00149                 ;COMPLETE IN 100 SECONDS
00150                 ;BEGINNING OF MEASUREMENT WINDOW IS IN REGS D AND E
00151                 ;PEAK MEASURED VALUE IS RETURNED IN REG E
00152 0000 F5                 PUSH    PSW
00153 0001 3EDF               MVI     A,0DFH
00154 0003 D300               OUT     0
00155 0005 3E00               MVI     A,00H   ;READ OUTPUTED VALUE
00156 0007 D302               OUT     2
00157 0009 3E10               MVI     A,10H
00158 000B D302               OUT     2
00159 000D 3EBC               MVI     A,0BCH  ;CHANGE MUX ADDRESS FOR MEASUREMENT
```

```
00160 000F D301            OUT     1
00161 0011 DB01     SLOOP1 IN      1
00162 0013 2F              CMA
00163 0014 E610            ANI     10H
00164 0016 C21100  )       JNZ     SLOOP1
00165 0019 DB00            IN      0
00166 001B 2F              CMA
00167 001C D5              PUSH    D
00168 001D BA              CMP     D       ;TEST FOR MEASUREMENT TIME
00169 001E D1              POP     D
00170 001F D23E00  )       JNC     MSMT
00171 0022 FECC            CPI     0CCH    ;TEST FOR END
00172 0024 DA3000  )       JC      OTPT
00173 0027 3EB4            MVI     A,0B4H  ;RESET MUX ADDRESS
00174 0029 D301            OUT     1
00175 002B 3E0F            MVI     A,0FH   ;SET END INDICATOR
00176 002D 30              SIM
00177 002E F1              POP     PSW
00178 002F C9              RET
00179 0030 3EB4     OTPT   MVI     A,0B4H  ;RESET MUX ADDRESS
00180 0032 D301            OUT     1
00181 0034 79              MOV     A,C     ;INCREMENT COUNTER
00182 0035 CE0C            ACI     0CH
00183 0037 D27800  )       JNC     SOUT
00184 003A 04              INR     B
00185 003B C37800  )       JMP     SOUT
00186 003E FEA6     MSMT   CPI     0A6H    ;TEST FOR SAMPLE PERIOD END
00187 0040 DA4F00  )       JC      INGATE
00188 0043 16FD            MVI     D,0FDH
00189 0045 79              MOV     A,C     ;INCREMENT COUNTER
00190 0046 CE0C            ACI     0CH
00191 0048 D27800  )       JNC     SOUT
00192 004B 04              INR     B
00193 004C C37800  )       JMP     SOUT
00194 004F 7A       INGATE MOV     A,D     ;INCREMENT SAMPLE TEST POINT
00195 0050 C602            ADI     02H
00196 0052 57              MOV     D,A     ;SAVE INCREMENTED SAMPLE TEST POINT
00197 0053 3E00            MVI     A,00H   ;READ DATA
00198 0055 D302            OUT     2
00199 0057 3E10            MVI     A,10H
00200 0059 D302            OUT     2
00201 005B 3EB4            MVI     A,0B4H  ;RESET MUX ADDRESS
00202 005D D301            OUT     1
00203 005F DB01     SLOOP2 IN      1
00204 0061 2F              CMA
00205 0062 E610            ANI     10H
00206 0064 C25F00  )       JNZ     SLOOP2
00207 0067 DB00            IN      0
00208 0069 2F              CMA
00209 006A D5              PUSH    D
00210 006B BB              CMP     E       ;TEST FOR NEW PEAK DATA VALUE
00211 006C D1              POP     D
00212 006D DA7100  )       JC      PKSDE
```

```
00213 0070 5F              MOV    E,A
00214 0071 79       WKSDE  MOV    A,C      ;INCREMENT COUNTER
00215 0072 CE0C            ACI    0CH
00216 0074 D27800   )      JNC    SOUT
00217 0077 04              INR    B
00218 0078 4F       SOUT   MOV    C,A      ;OUTPUT LOWER
00219 0079 1F              RAR
00220 007A 1F              RAR
00221 007B 1F              RAR
00222 007C 1F              RAR
00223 007D E60F            ANI    0FH
00224 007F 2F              CMA
00225 0080 D300            OUT    0
00226 0082 E6DF            ANI    0DFH
00227 0084 D300            OUT    0
00228 0086 3E9F            MVI    A,9FH
00229 0088 D300            OUT    0
00230 008A 78              MOV    A,B      ;OUTPUT MIDDLE
00231 008B E60F            ANI    0FH
00232 008D F640            ORI    40H
00233 008F 2F              CMA
00234 0090 D300            OUT    0
00235 0092 E6DF            ANI    0DFH
00236 0094 D300            OUT    0
00237 0096 3E5F            MVI    A,5FH
00238 0098 D300            OUT    0
00239 009A 78              MOV    A,B      ;OUTPUT UPPER
00240 009B 1F              RAR
00241 009C 1F              RAR
00242 009D 1F              RAR
00243 009E 1F              RAR
00244 009F E60F            ANI    0FH
00245 00A1 F680            ORI    80H
00246 00A3 2F              CMA
00247 00A4 D300            OUT    0
00248 00A6 E6DF            ANI    0DFH
00249 00A8 D300            OUT    0
00250 00AA 3E1F            MVI    A,1FH
00251 00AC D300            OUT    0
00252 00AE 3E3F            MVI    A,3FH    ;LATCH OUTPUT
00253 00B0 D300            OUT    0
00254 00B2 F3              DI              ;RESET INTERRUPT
00255 00B3 3E10            MVI    A,10H
00256 00B5 30              SIM
00257 00B6 F1              POP    PSW
00258 00B7 C9              RET
00259
00260
```

```
Tektronix  8080/8085 ASM V3.3  Symbol Table                Page    6

Scalars

   A ------ 0007          B ------ 0000          C ------ 0001          D ------ 0002          E ------ 0003
   H ------ 0004          L ------ 0005          M ------ 0006          PSW ---- 0006          SP ------ 0006

BSELNE Section (002D)

FSCAN Section (007E)

   FOUT --- 0017          FSCD --- 0063 G        FSCD1 -- 0064          HERR --- 006B          KILL2 -- 0079
   KILLF -- 0057          ZOT ---- 000C

PAUSE Section (0017)

   KILLP -- 0012          PCONT -- 000B

SSCAN Section (00B8)

   BKSDE -- 0071          INGATE - 004F          MSKT --- 003E          OTPT --- 0030          SLOOP1 - 0011
   SLOOP2 - 005F          SOUT --- 0078

WAIT5 Section (0015)

   KILLW -- 0010


  260 Source Lines     260 Assembled Lines   14710 Bytes available

          ))) No assembly errors detected (((
```

```
Tektronix  8080/8085 ASM V3.3                                    Page    1

00001                          SECTION OUTSHF
00002                    ;OUTPUTS VALUE OF CARRY BIT TO SERIAL OUTPUT WITH NECESSARY CLOCK
00003                    ;TRANSITIONS
00004 0000 DA0C00  >           JC      OUT1
00005 0003 3E00                MVI     A,00H
00006 0005 30                  SIM
00007 0006 3E40                MVI     A,40H
00008 0008 30                  SIM
00009 0009 C31200  >           JMP     OUT2
00010 000C 3E80          OUT1  MVI     A,80H
00011 000E 30                  SIM
00012 000F 3EC0                MVI     A,0C0H
00013 0011 30                  SIM
00014 0012 3EA4          OUT2  MVI     A,0A4H  ;CLOCK HIGH
00015 0014 D301                OUT     1
00016 0016 3EB4                MVI     A,0B4H  ;CLOCK LOW
00017 0018 D301                OUT     1
00018 001A C9                  RET
00019                    ;
00020                          SECTION LED
00021                    ;OUTPUTS LED INDICATOR INFORMATION CONTAINED IN CONTROL BYTES LEDDGT
00022                    ;AND LEDLTS
00023                          GLOBAL  LEDDGT,LEDLTS
00024 0000 0600                MVI     B,00H   ;ZERO COUNT FIELD
00025 0002 3A0000  >           LDA     LEDLTS  ;OUTPUT BLANKING AND LIGHTS
00026 0005 1F                  RAR
00027 0006 1F                  RAR
00028 0007 1F            LED2  RAR
00029 0008 04                  INR     B
00030 0009 4F                  MOV     C,A
00031 000A CD0000  >           CALL    OUTSHF
00032 000D 78                  MOV     A,B
00033 000E FE06                CPI     06H
00034 0010 D21800  >           JNC     LED1
00035 0013 47                  MOV     B,A
00036 0014 79                  MOV     A,C
00037 0015 C30700  >           JMP     LED2
00038 0018 0600          LED1  MVI     B,00H   ;ZERO COUNT FIELD
00039 001A 3A0000  >           LDA     LEDDGT  ;OUTPUT DIGITS
00040 001D 1F            LED4  RAR
00041 001E 04                  INR     B
00042 001F 4F                  MOV     C,A
00043 0020 CD0000  >           CALL    OUTSHF
00044 0023 78                  MOV     A,B
00045 0024 FE08                CPI     08H
00046 0026 D22E00  >           JNC     LED3
00047 0029 47                  MOV     B,A
00048 002A 79                  MOV     A,C
00049 002B C31D00  >           JMP     LED4
00050 002E 3EB6          LED3  MVI     A,0B6H  ;STROBE LED LATCH
00051 0030 D301                OUT     1
00052 0032 3EB4                MVI     A,0B4H
00053 0034 D301                OUT     1
```

```
Tektronix  8080/8085 ASM V3.3                                   Page     2

00054 0036 C9                   RET
00055                   ;
00056                           SECTION INSHF
00057                   ;SERIAL IN DATA IS PLACED IN THE MSB POSITION OF REG B
00058 0000 78                   MOV     A,B
00059 0001 1F                   RAR
00060 0002 47                   MOV     B,A
00061 0003 20                   RIM
00062 0004 E680                 ANI     80H
00063 0006 B0                   ORA     B
00064 0007 47                   MOV     B,A
00065 0008 3EA4                 MVI     A,0A4H  ;CLOCK HIGH
00066 000A D301                 OUT     1
00067 000C 3EB4                 MVI     A,0B4H  ;CLOCK LOW
00068 000E D301                 OUT     1
00069 0010 C9                   RET
00070                   ;
00071                           SECTION THMWHL
00072                   ;READ THUMBWHEEL SWITCH INFORMATION INTO DATA BYTES DECCS, DECDAY, AND
00073                   ;DECMTH
00074                           GLOBAL  DECCS,DECDAY,DECMTH
00075 0000 3EF4                 MVI     A,0F4H  ;STROBE THUMBWHEEL LATCHES
00076 0002 D301                 OUT     1
00077 0004 3EB4                 MVI     A,0B4H
00078 0006 D301                 OUT     1
00079 0008 0600                 MVI     B,00H   ;READ BCD CS VALUE
00080 000A CD0000  )            CALL    INSHF
00081 000D CD0000  )            CALL    INSHF
00082 0010 CD0000  )            CALL    INSHF
00083 0013 CD0000  )            CALL    INSHF
00084 0016 CD0000  )            CALL    INSHF
00085 0019 CD0000  )            CALL    INSHF
00086 001C CD0000  )            CALL    INSHF
00087 001F CD0000  )            CALL    INSHF
00088 0022 210000  )            LXI     H,DECCS
00089 0025 70                   MOV     M,B
00090 0026 0600                 MVI     B,00H   ;READ BCD DAY
00091 0028 CD0000  )            CALL    INSHF
00092 002B CD0000  )            CALL    INSHF
00093 002E CD0000  )            CALL    INSHF
00094 0031 CD0000  )            CALL    INSHF
00095 0034 CD0000  )            CALL    INSHF
00096 0037 CD0000  )            CALL    INSHF
00097 003A CD0000  )            CALL    INSHF
00098 003D CD0000  )            CALL    INSHF
00099 0040 210000  )            LXI     H,DECDAY
00100 0043 70                   MOV     M,B
00101 0044 0600                 MVI     B,00H   ;READ BCD MONTH
00102 0046 CD0000  )            CALL    INSHF
00103 0049 CD0000  )            CALL    INSHF
00104 004C CD0000  )            CALL    INSHF
00105 004F CD0000  )            CALL    INSHF
00106 0052 CD0000  )            CALL    INSHF
```

```
00107 0055 CD0000  )        CALL    INSHF
00108 0058 CD0000  )        CALL    INSHF
00109 005B CD0000  )        CALL    INSHF
00110 005E 210008  )        LXI     H,DECMTH
00111 0061 70               MOV     M,B
00112 0062 C9               RET
00113                ;
00114                       SECTION PRNTL
00115                ;TRANSMITS 2 BYTE FIELD IN PFIELD TO PRINTER AND INITIATES PRINTING
00116                       GLOBAL  PFIELD
00117 0000 DB01      PRNTL1 IN      1        ;TEST FOR BUSY
00118 0002 E601             ANI     01H
00119 0004 CA0000  )        JZ      PRNTL1
00120 0007 0600             MVI     B,00H    ;ZERO COUNT FIELD
00121 0009 3A0100  )        LDA     PFIELD+1         ;GET FIRST BYTE
00122 000C 1F        PRNTL3 RAR
00123 000D 04               INR     B
00124 000E 4F               MOV     C,A
00125 000F CD0000  )        CALL    OUTSHF
00126 0012 78               MOV     A,B
00127 0013 FE08             CPI     08H
00128 0015 D21D00  )        JNC     PRNTL2
00129 0018 47               MOV     B,A
00130 0019 79               MOV     A,C
00131 001A C30C00  )        JMP     PRNTL3
00132 001D 0600      PRNTL2 MVI     B,00H    ;ZERO COUNT FIELD
00133 001F 3A0000  )        LDA     PFIELD   ;GET SECOND BYTE
00134 0022 1F        PRNTL5 RAR
00135 0023 04               INR     B
00136 0024 4F               MOV     C,A
00137 0025 CD0000  )        CALL    OUTSHF
00138 0028 78               MOV     A,B
00139 0029 FE08             CPI     08H
00140 002B D23300  )        JNC     PRNTL4
00141 002E 47               MOV     B,A
00142 002F 79               MOV     A,C
00143 0030 C32200  )        JMP     PRNTL5
00144 0033 3E94      PRNTL4 MVI     A,94H    ;STROBE PRINT COMMAND
00145 0035 D301             OUT     1
00146 0037 3EB4             MVI     A,0B4H
00147 0039 D301             OUT     1
00148 003B C9               RET
00149                ;
00150                       SECTION DV1616
00151                ; DOUBLE PRECISION DIVIDE
00152                ; DIVIDEND:  REG D-E
00153                ; DIVISOR:   REG B-C
00154                ; QUOTIENT RETURNED IN REG D-E
00155                       GLOBAL  TEMP,COUNT
00156 0000 210000  )        LXI     H,TEMP
00157 0003 71               MOV     M,C
00158 0004 23               INX     H
00159 0005 70               MOV     M,B
```

```
00160 0006 23                INX   H
00161 0007 3611              MVI   M,11H     ;SET COUNT=17DECIMAL
00162 0009 010000            LXI   B,0100H
00163 000C 210000  >  NXTBIT LXI   H,COUNT   ;INITIALLY IS 17DECIMAL
00164 000F 7B                MOV   A,E
00165 0010 17                RAL
00166 0011 5F                MOV   E,A
00167 0012 7A                MOV   A,D
00168 0013 17                RAL
00169 0014 57                MOV   D,A
00170 0015 35                DCR   M
00171 0016 C8                RZ
00172 0017 79                MOV   A,C
00173 0018 17                RAL
00174 0019 4F                MOV   C,A
00175 001A 78                MOV   A,B
00176 001B 17                RAL
00177 001C 47                MOV   B,A
00178 001D 2B                DCX   H
00179 001E 2B                DCX   H         ;REG H-L NOW POINTS TO
00180                                        ;DIVISOR IN MEMORY
00181 001F 79                MOV   A,C
00182 0020 96                SUB   M
00183 0021 4F                MOV   C,A
00184 0022 23                INX   H
00185 0023 78                MOV   A,B
00186 0024 9E                SBB   M
00187 0025 47                MOV   B,A
00188 0026 D23100  >         JNC   NOADD     ;IF CY=0 DO NOT ADD DIVISOR
00189                                        ;TO RESULT OF PRVS SBTRCTN
00190 0029 2B                DCX   H
00191 002A 79                MOV   A,C
00192 002B 86                ADD   M
00193 002C 4F                MOV   C,A
00194 002D 23                INX   H
00195 002E 78                MOV   A,B
00196 002F 8E                ADC   M
00197 0030 47                MOV   B,A
00198 0031 3F        NOADD   CMC
00199 0032 C3C000  >         JMP   NXTBIT
00200
```

```
Tektronix 8030/8035 ASM V3.3  Symbol Table              Page    5

Scalars

  A ------ 0007        B ------ 0000        C ------ 0001        D ------ 0002        E ------ 0003
  H ------ 0004        L ------ 0005        M ------ 0006        PSW ---- 0006        SP ----- 0006

DV1616 Section (0035)

  NOADD -- 0031        NXTBIT - 000C

INSHF Section (0011)

LED Section (0037)

  LED1 --- 0018        LED2 --- 0007        LED3 --- 002E        LED4 --- 001D

OUTSHF Section (001B)

  OUT1 --- 000C        OUT2 --- 0012

PRNTL Section (033C)

  PRNTL1 - 0000        PRNTL2 - 001D        PRNTL3 - 000C        PRNTL4 - 0033        PRNTL5 - 0022

THMWHL Section (0063)

COUNT Unbound Global

DECCS Unbound Global

DECDAY Unbound Global

DECMTH Unbound Global

LEDDGT Unbound Global

LEDLTS Unbound Global

MFIELD Unbound Global

TEMP Unbound Global


 209 Source Lines     200 Assembled Lines   14622 Bytes available

        ))) No assembly errors detected (((
```

INITIAL DISTRIBUTION

9 Naval Air Systems Command
- AIR-03B, H. Andrews (1)
- AIR-03D, G. Heiche (1)
- AIR-310C, R. Shumaker (1)
- AIR-320R, H. Rosenwasser (1)
- AIR-330 (1)
- AIR-35 (1)
- AIR-5356A1 (1)
- AIR-7226 (2)

5 Chief of Naval Operations
- OP-225 (1)
- OP-354 (1)
- OP-506 (1)
- OP-982E (1)
- OP-982F (1)

1 Chief of Naval Material (MAT-08)

5 Chief of Naval Research, Arlington
- ONR-440 (1)
- ONR-443 (1)
- ONR-460 (1)
- ONR-470 (1)
- ONR-472 (1)

3 Naval Facilities Engineering Command, Alexandria
- Code 032, S. Hurley (1)
- Code 112 (1)
- Code 54 (1)

7 Naval Sea Systems Command
- SEA-04E (1)
- SEA-05R1 (1)
- SEA-05R14 (1)
- SEA-05R16 (1)
- SEA-09B312 (2)
- SEA-62R32 (1)

1 Commander in Chief, U.S. Pacific Fleet (Code 325)

1 Marine Corps Development and Education Command, Quantico (Marine Corps Landing Force Development Center)

1 Commander, Third Fleet, Pearl Harbor

1 Commander, Seventh Fleet, San Francisco

1 David W. Taylor Naval Ship Research and Development Center, Bethesda (Code 2862, P. Schatzberg)

1 Naval Academy, Annapolis

2 Naval Air Development Center, Warminster
- Code 606 (1)
- Library (1)

1 Naval Air Propulsion Center, Trenton (PE-71, A. F. Klarman)

7 Naval Civil Engineering Laboratory, Port Hueneme
- L03AP, E. Early (1)
- L52, E. Lory (1)
- L54
  - J. Crane (1)
  - D. Chan (1)
  - C. Imel (2)
  - L59, D. Brunner (1)

1 Naval Coastal Systems Center, Panama City (Code 112.2)
1 Naval Energy and Environmental Support Activity, Port Hueneme
2 Naval Explosive Ordnance Disposal Technology Center, Indian Head
- Code RD (1)
- Technical Library (1)

1 Naval Intelligence Support Center (NISC-60, Library)
3 Naval Ocean Systems Center, San Diego
- Code 513
  - S. Yamamoto (1)
  - A. Zirmo (1)
- Code 5131, M. H. Salazar (1)

2 Naval Ordnance Station, Indian Head
- Code E, Pollution Abatement Program Manager (1)
- Technical Library (1)

3 Naval Research Laboratory
- Code 4300 (1)
- Code 6100 (1)
- Library (1)

3 Naval Ship Weapon Systems Engineering Station, Port Hueneme
- Code 5711, Repository (2)
- Code 5712 (1)

2 Naval Amphibious Base, Coronado
- SDV Team 1 (1)
- SEAL Team 5 (1)

5 Naval Surface Weapons Center, Dahlgren
- G 51
  - J. Bromfield (1)
  - D. Knudsen (1)
  - R. Gibbs (1)
- Code 651, D. Rowe (1)
- Technical Library (1)

5 Naval Surface Weapons Center, White Oak Laboratory, Silver Spring
- Code R11 (2)
- Code R16, J. Hoffsommer (1)
- Code R17 (1)
- Code R141, G. Young (1)

1 Naval Underwater Systems Center, Newport (Code 364, R. Kronk)
1 Naval War College, Newport
1 Naval Weapons Station, Concord (Code 321, M. Bucher)
2 Naval Weapons Station, Yorktown
- Code 203, M. West (1)
- Code 50 (1)

6 Naval Weapons Support Center, Crane
- Code 3025, D. Burch (1)
- Code 50C, B. E. Douda (1)
- Code 505, J. E. Short (1)
- NAPEC (1)
- R&E Library (2)

4 Office of Naval Technology, Arlington
- MAT-0716 (1)
- MAT-072 (1)
- MAT-0723 (1)
- MAT-0724 (1)