REPRODUCED AT GOVERNMENT EXPENSE

DTIC

AD-A151 963

CREATING A MOBILE AUTONOMOUS ROBOT RESEARCH SYSTEM (MARRS)

THESIS

Thomas E. Clifford
First Lieutenant, USAF

Hubert G. Schneider
Captain, USAF

AFIT/GE/ENG/84D-19

This document has been approved for public release and sale; its distribution is unlimited.

DTIC FILE COPY

DTIC
ELECTE
APR 02 1985
S D
E

DEPARTMENT OF THE AIR FORCE
AIR UNIVERSITY
AIR FORCE INSTITUTE OF TECHNOLOGY

Wright-Patterson Air Force Base, Ohio

85 03 13 066

AFIT/GE/ENG/84D-19

CREATING A MOBILE AUTONOMOUS ROBOT RESEARCH SYSTEM (MARRS)

THESIS

Thomas E. Clifford Hubert G. Schneider III
First Lieutenant,USAF Captain, USAF

AFIT/GE/ENG/84D-19

DTIC
ELECTE
APR 0 2 1985
S D
E

Approved for public release; distribution unlimited

AFIT/GE/ENG/84D-19

CREATING A MOBILE AUTONOMOUS ROBOT RESEARCH SYSTEM (MARRS)

THESIS

Presented to the Faculty of the School of Engineering

of the Air Force Institute of Technology

Air University

In Partial Fulfillment of the

Requirements for the Degree of

Master of Science in Electrical Engineering

Accession For	
NTIS GRA&I	X
DTIC TAB	☐
Unannounced	☐
Justification	
By	
Distribution/	
Availability Codes	
Dist	Avail and/or Special
A-1	

Thomas E. Clifford
First Lieutenant, USAF

Hubert G. Schneider III
Captain, USAF

DTIC COPY INSPECTED

December 1984

Approved for public release; distribution unlimited

Preface

The creation of MARRS-1 and the AFIT Mobile Robotics Laboratory was made possible through the energetic support of many individuals and organizations. In particluar, we want to thank our thesis advisor Dr. Matthew Kabrisky and the Department of Electrical Engineering for providing the ultimate research environment where opportunities for self realization and true contributions to science and technology flourish. Additionaly we thank Captain Rob Milne, Captain Lee Baker, Robert Durham, Orville Wright, Dan Zanbom, Dick Wager, Charlie Powers, Stan Bashore, and Mary Elizabeth Dennis of AFIT/ENG; Leroy Cannon, and Steve Coats of AFIT/ENY; Ron Gabriel of AFIT/ENP; Carl Shortt, Ron Ruley, and Russell Murry of AFIT/RMF; our sponsor, Tim Anderson of AFMRL; Lt. Keith Carter of AFWAL/AADM-2; Amn. John Burns of AFIT/PA; SSgt. Robert Lofland of Det. 2 1361 AV Sq; Doug Sauer of SRL; Tom Meyer and Gordon Doughman of Motorola; Dick Parr, Abe Siff, and Clair King of Datametrics; and Dennis Van Deusen of Virtual Devices.

Many thanks also go to Lt. Randall Owen who started this new endeavor at AFIT and Captain James Holten, an AFIT Phd. candidate, for his suggestions and encouragement.

But most of all, we are especially grateful to our parents, wives, and children whose support and sacrifices have allowed this project to be "more than just a thesis."

Contents

	Page
Preface	ii
List of Figures	vi
List of Tables	viii
Abstract	ix
I. Introduction	I-1
Background	-1
Objective	-2
Why MARRS-1	-3
II. Background issues of Mobile Robotics	II-1
Basic Requirements for a Mobile Robot	-1
Computer Hardware	-2
Computational Element Selection	-3
Microprocessor Features of Interest	-3
Mechanical Drive	-6
Mechanical Device Performance	-6
Sensors	-7
Robotic Vision	-9
Range and Direction Techniques	-10
Triangulation	-10
Controlled Lighting	-10
Stereo Vision	-11
Stereo Convergence in an IC	-12
Range from Time-of-Flight	-12
Ultrasonic Sonar	-13
Time-of-Flight Limitations	-14
Robot Software	-14
Flexibility thru Resources	-14
Levels of Robot Programming	-15
Basic Functions Required	-16
Quality Software	-17
Programming Guidelines	-18
Decision Making	-19
Deferred Data Items	-19
Resource Allocation	-20
Exception Handeling	-20
High Level Language Programming	-21
Sensory Data Processing	-23
Sensor Error	-23
What is a Robot	-24

III. MARRS-1 DESIGN III-1

Overview. . . . . -1
Familiarization with the AFIT HERO-1. . -2
What Could the AFIT HERO-1 Robot Do . . -3
Deficiency Identification . . . . . -3
System Level Description. . . . . -5
Design Philosophy . . . . . -7
Mechanical Design . . . . . -8
Drive Computer. . . . . -8
Navigation Computer . . . . . -9
Nav Computer Hardware . . . . . -10
Nav Computer Software . . . . . -10
Optical Shaft Encoder (OSE) Subsystem . -11
Ultrasonic Sonar Subsystem. . . . . -12
Software Development Support. . . . . -15

IV. MARRS-1 System Integration IV-1

Sideline Activities . . . . . -4
Robot Integrated Operation Test Plan. . -5
Test Range Environment. . . . . -5
MARRS-1 Operating Modes . . . . . -6
Support Equipment . . . . . -7
Drive Computer Learn Mode Programs. . . -7
Robot Test Procedures . . . . . -9
Data Collection . . . . . -11
Test Data Usage . . . . . -12

V. MARRS-1 Integrated Operation Test Results. . V-1

Minor Test Problems . . . . . -1
Mapping Algorithm . . . . . -2
Graphics Plots. . . . . -4
Discussion of RIOT Results. . . . . -16

VI. Recommendations for Future Work on MARRS-1 . VI-1

Yet Another Computer for MARRS-1. . . . -3
Cooperation Needed in Mobile Robotics . -4
Conclusion. . . . . -6

Bibliography. BIB-1

Vita Lieutenant Clifford. VITA-1
Captain Schneider. . . . . -2

Appendix A: Marrsbug Operating System. A-1

Appendix B: Extended Interrupt Handler B-1

Appendix C: Mapper C-1

Appendix D:	Navigation Computer Definitions. .	D-1
Appendix E:	Drive Computer Definitions	E-1
Appendix F:	Navigation Computer Schematics . .	F-1
Appendix G:	Navigation Computer Parts List . .	G-1
Appendix H:	HERO-1 to MARRS-1 Conversion . . .	H-1
Appendix J:	Lab Equipment, Hardware, Software.	J-1
Appendix K:	K-3 Encoder Installation	K-1
Appendix L:	Polaroid Range Board	L-1
Appendix M:	6800 Hex File Format	M-1
Appendix N:	Nav Computer Software User's Manual	N-1
Appendix O:	RIOT # 20 Raw Data Listing	O-1

List of Figures

Figure		Page
3.1	AFIT HERO-1 Built by Lt. Owen.	III-2
3.2	AFIT MARRS-1	III-6
3.3	MARRS-1 Control Structure.	III-7
3.4	Sonar Transducer Location.	III-13
4.1	Modified Front Wheel Assembly.	IV-2
4.2	MAPPER Heading Convention.	IV-9
5.1	RIOT Range Layout.	V-5
5.2	Location of Objects for Test with Objects.	V-5
5.3	Owen Thesis Test Range and Sonar Map . . .	V-6
5.4	Owen Thesis Coincidence Sonar Map.	V-7
5.5	RIOT #18: Straight One Sonar at a Time	V-8
5.6	RIOT #14: Zig Zag One Sonar at a Time	V-8
5.7	RIOT #19: Straight Two Sonars at a Time	V-9
5.8	RIOT #15: Zig Zag Two Sonars at a Time	V-9
5.9	RIOT #20: Straight Three Sonars at a Time	V-10
5.10	RIOT #16: Zig Zag Three Sonars at a Time	V-10
5.11	RIOT #21: Straight Four Sonars at a Time	V-11
5.12	RIOT #17: Zig Zag Four Sonars at a Time	V-11
5.13	RIOT #5: Straight One Sonar at a Time	V-12
5.14	RIOT #10: Zig Zag One Sonar at a Time	V-12
5.15	RIOT #4: Straight Two Sonars at a Time	V-13
5.16	RIOT #11: Zig Zag Two Sonars at a Time	V-13
5.17	RIOT #7: Straight Three Sonars at a Time	V-14
5.18	RIOT #12: Zig Zag Three Sonars at a Time	V-14

Figure		Page
5.19	RIOT #9: Straight Four Sonars at a Time	V-15
5.20	RIOT #13: Zig Zag Four Sonars at a Time	V-15
6.1	Unified AI/Robotics Model.	VI-5
G.1	CPU Control Bus.	G-2
G.2	CPU Address Bus.	G-3
G.3	CPU Data Bus	G-4
G.4	RAM/ROM Address and Data Bus	G-4
G.5	I/O Address and Data Bus	G-5
G.6	RAM/ROM Chip Enables	G-6
G.7	I/O Chip Enables	G-7
G.8	I/O Auxiliary Signals.	G-8
G.9	ROM Overlay RAM circuits	G-9
G.10	Serial I/O Ports	G-10
G.11	Buffered Sonar Signals	G-11
G.12	Sonar Timer/Range Board Interface.	G-12
G.13	Sonar Transducer Selection Circuitry . . .	G-13
G.14	Sonar Transducer Relay Interface	G-14
G.15	Optical Shaft Encoder Timer/Counter Circuit	G-15
G.16	24 Pin Sonar Transducer Header	G-16
G.17	Dual Sonar Range Board 20 Pin Header . . .	G-16
G.18	Optical Shaft Encoder Board 40 Pin Header.	G-17
H.1	Drive Computer I/O Upgrade	H-2
H.2	MARRS-1 Battery Configuration.	H-2

List of Tables

Table		Page
4.1	RIOT Configurations.	IV-7
4.2	MARRS-1 Straight Line Drive Computer Program	IV-8
4.3	MARRS-1 Zig-Zag Drive Computer Program . .	IV-8
4.4	RIOT Raw Data Format	IV-11

Abstract

The Mobile Autonomous Robot Research System (MARRS-1) was created as the first of a series of autonomous vehicle prototypes for the Air Force Institute of Technology. The major accomplishment in developing MARRS-1 is the integration of Optical Shaft Encoder (OSE) data with Ultrasonic Sonar range and direction information to produce accurate environmental maps that are relative to the robot. The OSE and Sonar subsystems make up the most important part of MARRS-1's Navigation Computer. With these two subsystems and minimal additional software, mapping and obstacle avoidance become a reality. The thesis includes schematics, parts list, and software listings for the MARRS-1 Navigation Computer. Additionally, the mapping and navigation algorithmsare shown implemented in the BASIC language with numerous example graphics maps created by the integrated MARRS-1 robot. Issues involved in solving mobile robotics problems are discussed. Originator-supplied keywords included:

p. 1473 (last p.)

CREATING A MOBILE AUTONOMOUS ROBOT RESEARCH SYSTEM (MARRS)

I. Introduction

Background

A Nuclear, Biological, Chemical (NBC) contaminated environment presents a severe hazard for aircraft ground maintenance crews. A mobile autonomous robot capable of performing simple aircraft maintenance tasks could protect many lives from NBC exposure while allowing the Air Force to maintain its combat readiness.

In order for a mobile autonomous robot to function properly on a flight line, the robot must perform the following tasks:

1) Avoid obstacles (both static and dynamic),
2) Locate the appropriate aircraft,
3) Perform fueling and/or maintenance,
4) Return to previous work station.

Early AFIT efforts in mobile robotics were hampered by a lack of suitable hardware and software support (1:59-66). The acquisition of a Heathkit Hero-1 robot, laser barcode reader, and additional sonar sensors by 1Lt Randall J. Owen II for his thesis (2:I-3) was a great move forward for AFIT in mobile robotics. Before any autonomous vehicle can fuel its first aircraft there are however, several problems which

must be overcome. These problems may seem trivial but in fact are the limiting factors in mobile robotics today. Many of these problems are found in the Hero-1 as well as other robot systems:

1) Lack of robot software,
2) Combined error effects in the robot,
3) Reduced robot efficiency due to the dedication of resources for error compensation,
4) Understanding and reducing the amount of performance data.

Objective

This thesis is a follow-on effort to Lt Owen's thesis: "Environmental Mapping by a Hero-1 Robot Using Sonar and a Laser Barcode Scanner". The main objective of this thesis is to continue the development towards an autonomous robot capable of moving from one location to another while avoiding obstacles. However, the thesis effort is divided into the following sub-objectives:

1) Identify and eliminate design deficiencies in the AFIT HERO robot.
1) Establish a software development capability for the AFIT HERO robot.
2) Establish a library of robot programming software and algorithms.

3) Create and conduct tests that will identify system errors and provide figures of merit on robot performance.

4) Establish an AFIT mobile robotics laboratory.

Why MARRS-1

The HERO-1 robot has many design deficiencies (chapter III) that make it difficult to continue its use as a research robot beyond what has been done by Lt. Owen. The two greatest deficiencies of the HERO-1 are the front wheel design and the lack of online and offline software development capabilities. The ability to rapidly develop and debug software was seen as one of the most important improvements needed in the AFIT mobile robotics research environment. HERO-1 robot programmers are required to write programs in machine language, assemble the code by hand, then enter the code as hexadecimal numbers from a keypad on the robot. Programs once loaded on the robot may then be saved, for later use, on audio cassette at 300 baud. A better approach to mobile robot programming is necessary.

Although the HERO-1 is well endowed with sensors (a single three degree beamwidth ultrasonic sonar range finder, a 256 level light intensity sensor, a 256 level sound volume sensor, an ultrasonic motion detector, and wheel odometer) ,its abundant selection of sensors is thwarted by its lack of useful and user friendly software.

To make things worse, the HERO-1 robot operates in an open loop (no active feedback) mode. A quality mobile research robot was needed but could not be found commercially. Two options were available:

1) Build a mobile robot from scratch.

2) Improve the existing HERO-1 design.

The second option was taken resulting in a robot named Mobile Autonomous Robot Research System (MARRS)-1. This also resulted in the creation of the AFIT Mobile Robotics laboratory which initially came more as a necessity rather than as a conscious effort.

AFIT's mobile robotics research was being conducted in the Electrical Engineering Department's Signal Processing laboratory. Work space there was at a premium. A search for lab space and a mobile robotics test range resulted in moving the research effort to a building needing rehabilitation. Over a period of months of scrounging for equipment, furniture, and supplies, the new mobile robotics work area was in fact a laboratory. AFIT building renovation plans have identified 800 square feet for mobile robotics research.

II. Background Issues of Mobile Robotics

Basic Requirements for a Mobile Robot

If a robot is going to move about from one location (present position) to another (the goal), then several important criteria must be met. The robot must know its initial location and heading with respect to some reference point. The location of the goal must also be specified with respect to the reference point or to the robot's own position. Knowledge of the location of all objects around the robot and what the objects are may not be important. However, the locations of obstacles are significant for path planning. An object becomes an obstacle when it becomes apparent that the object lies or will lie along the robot's path towards the goal. This situation is analogous to a human that suffers from agnosia. The person is unable to identify what some objects are but is aware of the object's presence and can maneuver around them. Navigation can be accomplished in a timely manner only if position information can be gathered, coupled together, interpreted, and acted upon.

Four basic elements are required to create a robot that can maneuver its way around objects.

1) A computer (hardware) is required to process sensor data and to provide control logic to the robot subsystems.

2) A drive system is needed for mobility. The most common mobile robot drive systems are composed of digital

controlled DC motors turning wheels since articulate legs are very rare because of their complexity and expense (3:2). Feedback must be provided from the drive system to the computer to give vital information such as acceleration, velocity, distance traveled, and heading.

3) A variety of types of sensors are needed to provide the robot with far and near range obstacle detection, object identification, and sensory system cross-checks. These sensors, coupled with the drive system feedback give the computer the information necessary to maintain an accurate estimation of its current position and heading.

4) Computer programs (software) are needed to interpret sensory information, plan/execute required operations, and control robot subsystems.

Computer Hardware

Until a few years ago autonomous vehicles were unheard of in real life. The advent of the microcomputer has made fact possible out of fiction.

The two most important uses of a microcomputer in robotics are device control and data processing. In a dynamic environment, multiple computers may be employed to process data and control devices.

Several prototype robots with multiple computers operate under a master-slave principle. Generally the motion controllers act as slaves to the sensory

processors/interpreters. Communication between masters and slaves is handled by an interrupt scheme (4:212).

Computational Element Selection

Computational elements in a robot can be anything from a hydraulic valve to a multiuser/multiprocessor mainframe computer. Fornow, the discussion centers on digital microprocessors since most present day robotics projects are so based. It should be be remembered, however, that there are many alternatives available for fulfilling a robot's computational needs.

Microprocessor Features of Interest

Although the following list of microprocessor features is not complete nor exhaustive in identifying a robot designer's needs, it does point to those features needing greatest consideration when choosing a microprocessor for an imbedded robotics computer application. The features are:

1 Existing software support;

2 Interrupt structure:

   a. Nonmaskable interrupt;

   b. Maskable interrupt;

   c. Software or System interrupt;

   d. Priority interrupt;

   e. Buffered interrupts when masked;

3 Input/Output facilities;

4 Instruction set and addressing modes;

5 A Test and Set instruction for resource control;

6 Addressable memory space;

7 Hardware support chips:

a. DMA controller;

b. Memory management;

c. Numeric coprocessor for floating point operations;

d. I/O;

8 Special supervisor modes for system failsafe monitoring;

9 Processor compatibility with supportchips/devices;

10 Minimum system and support cost; and

11 Development team familiarity with the chosen microprocessor.

Existing software to support the chosen microprocessor has to be the single most important factor used in the selection process since 90% of project costs historically have been for software development. By procuring commercial support software, in-house software development overhead is decreased and more resources can be directed toward robot specific software. Development team familiarity with a given microprocessor has been an overriding choice factor in a number of projects such as in the development of the Motorola 6808 based HERO-1 robot.

In reviewing the presently available microprocessors against the above criteria, the Z80 microprocessor is the best choice (here at AFIT) mainly because of available hardware/software support. However, when not considering available support, the MC68000 family of microprocessors has the best feature set for robotics applications because (5,6,7):

1 Its memory oriented architecture (as opposed to register oriented) facilitates memory to memory transfers of data which is very useful for sensory data processing.

2 Sixteen Megabytes of memory may be directly addressed allowing for a mobile robot to carry with it a tremendous amount of instructions and data without the need for an external mass storage device.

3 A test and set instruction is provided for controlling access to shared resources in a multiprocess, multiprocessor, and/or interrupt driven environment typical of robot designs and applications.

4 Synchronous or asynchronous interfacing to external devices allows great flexibility to the hardware designer.

5 Any combination of processor registers may be saved or restored with a single instruction.

6 All program code is directly relocatable since all address references are added to a base register that is set to effect the relocation.

7 The UNIX operating system is widely used for MC68000 systems and has with it some very powerful features. However, the overhead in terms of memory usage and speed of execution may make this a negative feature for mobile robotics. Also, although UNIX is multiuser/multitasking, it is not optimized for the realtime computational environment required by robotics. It is, however, a very powerful operating system for software development.

Today's choice in the use of a particular microprocessor for a robotics application may not be tomorrow's choice. Designers must plan for an upward migration of requirements and capabilities and yet accomplish tomorrow's job today.

Mechanical Drive

A typical drive system of a robot utilizes a computer controlled DC motor capable of variable speeds in both forward and reverse directions. Motors are mounted on one or more wheels to provide steering and motion control.

Mechanical Device Performance (8:12-24)

Software routines that control mechanical devices must be designed with the following items in mind:

1 Servo systems must be stable over wide dynamic ranges.

2 Spatial resolution has finite errors (mechanical accuracy) and errors due to quantization.

3 Repeatability is more difficult when the mechanical accuracy of the robot is less than the accuracy of the sensory data used to modify the robot's action.

4 Repeatability will suffer from component wear and aging.

5 Errors will accumulate. Sensory data must be used to update mechanical device commands.

6 Compliance to a command may be dependent upon the mechanical loading of system components.

7 Compliance to a command may exhibit a hysteresis effect depending on the direction of arrival (such as an accumulated 360 degree turn from the right is really 365 degrees but coming from the left it is only 355 degrees).

8 Oscillations may occur if command compliance is too slow.

Sensors

Without sensors, a robot is nothing more than a Numerically Controlled (NC) machine (8:57). Sensors allow a robot's actions to be determined based upon the robot's sensory interpretation of the world.

Before a robot can move about and perform any function, it has to sense its surroundings. This information will allow it to compute a clear path of travel and prevent it from bumping into obstacles.

There are numerous types of sensors commercially available today for object detection and identification. These sensors range from the simplest contact switch to the most complex vision systems. Yet each sensor has its own limitations.

For example, a microswitch can be used to detect whether or not an object has made contact with the robot. However, it can not tell how much pressure is on the object nor the maximum amount of pressure that can be tolerated. A fragile item such as a flower might be crushed by a robot hand that lacks very low pressure touch sensors.

The sensing of position can be simulated through optical devices (9:71). The use of photo emitters and receptors can measure intensity of light as well as touch. Another method of simulating touch is through membrane contact surfaces. Many of these membrane sheets form an array of switches. The greater the number of switches used, the better the resolution will be. However, increasing the number of sensors means an increased amount of data which requires much more computing time (10:73). This holds true for sensors in any domain and not just touch sensors.

The sensors discussed thus far will only give the robot information about its immediate surroundings. If the robot is to maneuver around in some unknown environment then it must also have access to sensory information about objects at much greater distances. What is required is some form of vision.

Robotic Vision

Moravec sized up the state of the art in robotic vision by saying, "There's a handful of techniques for robot vision that sort of work, but none that works spectacularly well. We're all still groping in the dark (11:73)." As robotic vision goes, so goes mobile robotics.

Jarvis (12) points out that the human visual system uses many techniques to extract range information about the objects in the field of view and which may be used by robots. These include; changes in brightness level, binocular convergence (the inward pointing of the eyeballs which is inversely proportional to the range of the object), stereo disparity (the closer the object the greater the disparity), vertical position in the visual field (closer objects are usually lower in the field of view), diminution of size with distance, occlusion clues and outline continuity (complete objects look closer than partially obscured ones).

Range and Direction Techniques

The principal range with direction vision techniques used by robots are triangulation, surface orientation from image brightness, stereo disparity and binocular convergence, ultrasonic sonar, radar, and laser time-of-flight (12).

Triangulation

Triangulation techniques use a narrow beam of light and a camera that is physically displaced from the light beam source. The camera tracks the light beam as it is swept across the field of view. The azimuth and elevation (pointing direction) of the camera and light beam are recorded during the scan. Using Euclidean geometry, a three dimensional picture (3-D) is generated from the camera's 2-D picture and the direction information. Since the camera is physically displaced from the light beam, it can see points in the scene that the light beam can not and vice versa. This lack of common origin causes problems for scene interpretation and is only used in controlled situations.

Controlled Lighting

Surface orientation from scene brightness gives range information indirectly. Using high contrast controlled lighting, edges of objects are defined by looking for a change in brightness between adjacent pixels (picture elements). Keller (13:123) indicates that the generally

accepted minimum pixel count for robotic vision purposes is 256 horizontal by 256 vertical with 256 levels of brightness (grey scale). This pixel brightness comparison creates a tremendous computational burden on a robot and is normally performed remotely by special computers. Once the edges of an object are defined, the relative range of the object is estimated using occlusion clues and outline continuity rules.

Stereo Vision

The stereo disparity and binocular convergence combine the techniques of triangulation and edge detection in that the pixels of two physically separated cameras are matched. The angular position in the field of view of each camera for a specific common point will be different from one camera to the other because of the physical separation of the cameras. The difference between the angular position of the two views is equivalent to the amount of inward turning of the eyes in the human visual system which is inversely proportional to the range of the common point. The greatest problem with this technique is being able to distinguish which pixel of one camera is the same point in the other camera (13:123). This problem can be compounded when the picture being processed has a periodic pattern such as a brick wall or a fence with a vertical or horizontal pattern. In such situations, the computer that is correlating points between pictures gets confused and usually can't solve the problem.

Stereo Convergence in an IC

Iverson (14) describes an integrated circuit (IC) that has 23 pairs of light detectors lined up in two rows with each having its own microlens bonded directly to the chip carrier. The IC is placed behind the lens of a single camera and is capable of doing edge detection and range calculations using stereo disparity and binocular convergence techniques passively without using special lighting. Such an equipped camera system does not suffer from most of the problems of the previous paragraphs and holds great promise for freeing mobile robots from the lab. The accuracy of the system depends on the distance to the object being sensed and the focal length of the imaging lens used on the camera.

Range from Time-of-Flight

Ultrasonic sonar, radar, and laser time-of-flight techniques rely on the propagation of energy (sound, electromagnetic, and light) through air to an object that reflects the energy back. The time to make the trip is proportional to the range of the reflecting object. The problem with these techniques is that the power of the return energy received by the sensor decreases at a rate proportional to the range to the fourth power. Hence, an increase in range coverage requires a tremendous increase in transmitted power which may be beyond safe levels.

Ultrasonic Sonar

Laser light and television systems can provide distance information and much more. However, these systems tend to be very complex and expensive (10:180). A low cost alternative approach is to use an ultrasonic device (like the ones found on the Polaroid Land cameras.)

A high frequency "chirp" is transmitted from the sonar device. A counter keeps track of the time between the instant the signal is transmitted and the time the signal returns. The Polaroid sensor for example has a range of 0.9 feet to 35.0 feet (15:15). Although this sensor can provide the robot with limited information about its surroundings, the object's inclination and geometry could affect the quality of the returned signal. Better results can be obtained with multiple ultrasonic sensors mounted on the robot in different directions (10:183).

Owen (2) showed that mobile robot obstacle avoidance was possible by reducing the amount of information to be processed by the use of multiple ultrasonic sonar sensors giving the range to the closest obstacle at known directions. He also showed that a crude map of the robot's environment could be made from robot position and sonar information.

Jarvis (12:135) indicates that obstacle detection and robot navigation are good applications for ultrasonic sonar because of their low cost and ease of use.

Radar range finders have given way to laser time-of-flight range finders since the beam of the laser is very narrow and can be precisely controlled. Since the path traveled to the object is done at the speed of light, the supporting instrumentation must be capable of 30 nanosecond resolution for range accuracy of 1 centimeter. This requirement pushes the present limits of economical electronics. Jarvis (16) feels that such laser range finders used with standard single camera 2-D vision systems could yield sufficient quality for robotic scene analysis.

Robot Software

Robotics research, development, and applications require advanced engineering and technical skills (8:55). The key element here is computer control via software. The sophistication of the robot's software will vary directly with the complexity of the task to be performed. What distinguishes robot software from other software is the robot's interaction with the real world. The software must account for numerous possibilities and outcomes of situations.

Flexibility thru Resources

Computer software enables a robot to perform a myriad of tasks. However, there is no standard or universal robot programming language. For every unique robot, there is a

unique set of instructions to control that robot.

Flexibility in robot programming is found in the basic operations the robot can perform as determined by its resources. A robot's resources are:

1 algorithms;

2 data;

3 computational power;

4 storage capacity;

5 commandable devices (motors, relays, servos, wheels, arms, end effectors, and other special purpose devices);

6 sensors (gathers or verifies data on system operation or the environment);

7 and master/slave connections with other robots, machines, systems, computers, and/or humans.

Levels of Robot Programming

There are three distinct levels of robot programming: system, task, and operator (8:55). System programming provides the lowest level of routines to control robot resources and interfaces between resources. Task level programming is done as high level calls of the lower system level routines. Operator programming may consist of loading programs into the robot, adding required or optional data, turning the robot on or off, teaching the robot a sequence of operations to be remembered for later use by means of a

"teach box" or "pendant", or physically leading the robot by the hand thru the required operation while having the robot memorize the sequence for later use. Each level of robot programming requires a different level of skill and understanding.

Basic Functions Required

The set of required basic functions for a robot are (8:57):

1 Computation:

a. analytic geometry is most useful;

b. coordinate representation and transformation;

c. vector operations (dot product, cross product, scaling, normalization, and linear operations);

2 Decision (conditional branch based on processed sensor data):

a. sign test (+, -, Ø);

b. relation (<, >, =);

c. Boolean (on, off, true, false, 1, Ø);

d. bit pattern given a reference pattern;

e. set operations (member, nonmember, subset, empty set);

3 Communication (internal and external);

4 Movement;

5 Sensor data gathering; and

6 Sensor data processing.

Quality Software

Quality software development comes from discipline in following an established methodology. Top down structured programming can produce software that is (8:62):

1 correct (hard to determine);

2 reliable (no detected errors);

3 valid (meets specifications and is suitable for the job);

4 resilient (degrades gracefully when things go wrong, checks for errors, and provides recovery routines);

5 usable (shows consideration for human factors consistent conventions, few if any arbitrary codes/names, through diagnostics and error messages);

6 clear (design structure apparent from program listing, meaningful names, use of well known algorithms, frequent and effective comments, modular structure);

7 maintainable/modifiable (a by-product of clarity, changes due to detected errors or system changes are easily incorporated);

8 generalized (performs over a wide range of input values, modes, and use);

9 portable (hardware specific and software dependent features are isolated for easy change to another computer system);

10 and is testable (step by step testing is possible due to simple structured algorithms).

Programming Guidelines

The following guidelines for structured programming provide a methodology for program development (8:69):

1 Program in small modules.

2 Comment programs telling what and why things are done and what assumptions exist if any.

3 Don't misuse the instruction set or software language.

4 Don't write self modifying programs.

5 Avoid complex statements - break them up into smaller parts.

6 Use indentation and a format that makes listings more readable.

7 Avoid negative Boolean logic. Reversing an if - then clause allows dropping a NOT in front of an expression.

8 Use meaningful names for variables, constants, and procedures.

9 Make modules that do not interfere with the code or data of other modules.

10 Uncommented code that works is better than commented code that doesn't work, until it comes time to modify the code. Comments should clarify. Clarity is its own reward.

Decision Making

A major part of a robot control system is decision making. The more decisions that can be deferred until run time, the better the robot program can be adapted to changing task requirements. There are four kinds of decisions that may be deferred until run time (8:74):

1 What initial data items are required.

2 How to allocate resources.

3 How to coordinateconcurrentprocesses.

4 Howtohandle exceptions.

Deferred Data Items

Determining deferred data items may require communication with an external computer system, locating an index mark or calibration jig for sensor alignment, or even human interaction with the robot computer and/or sensors.

Resource Allocation

Resource allocation becomes a problem when two or more processes require the same resource. This still may be deferred past the start of run time to the concurrent process coordinator to resolve once the resources are requested during program execution.

The concurrent process coordinator switches the attention of the central processor and possibly other system resources between processes by use of a semaphore or Dijkstra flag. In multiple processor, multiple process, and/or interrupt driven robots, the use of special hardware (or a software instruction like the afore mentioned MC68000 test and set instruction) may be required to insure resolution of resource allocation conflicts. The coordinator must never allow a situation to exist where two processes or processors have been allocated resources and will not release them to another and yet can not proceed until a resource controlled by another is obtained. This is the classic deadlock or deadly embrace.

Exception Handling

Exceptions are either predictable or unpredictable (8:77). Predictable exceptions occur when a verification step returns false such as a mobile robot not finding a position update marker as planned. Unpredictable exceptions occur during well defined procedures. These are hardware

failures or the selection of a software path that was not tested and has an error. Software failures are best treated with preventive measures earlier discussed. Hardware redundancy, parity bits, checksums, cyclic redundancy check characters (CRC), message sequence numbers, send and receive addresses, and error detection/correction codes are possible ways to decrease or handle unpredictable exceptions.

It may be advisable to disable the robot on certain exceptions. Time-outs may be implemented in hardware or software to disable a robot if a "keep alive" signal is not updated every so often. If disabled by a time-out, the robot should only be restarted by a special manual or automatic procedure. Robots should have deadman and panic switches to protect both humans and equipment.

High Level Language Programming

Programming should be done at the highest level of language possible consistent with the needs of efficiency and clarity. It is imperative that task level programming discussed earlier be done in an interpretive or haltable/restartable language so as to be able to debug programs while running on the robot. Software facilities required for program debugging include utilities to:

1 Up-load/down-load code from an off-line (off-robot) software development system to the robot;

2 Relocate code in memory;

3 Link modules;

4 Allow Symbolic debugging;

5 Set/reset breakpoints; and

6 Single step program execution.

Programming languages used should conform to the structured programming guidelines. Possible languages include:

1 Assembly language in the processor's instruction set;

2 The C programming language;

3 Structured FORTRAN;

4 PASCAL;

5 ADA;

6 LISP;

7 PROLOG; and

8 FORTH.

Many other good languages exist, but the mentioned languages have virtues which make them desirable for program development and debugging. There are also many robot specific languages but are usually processor and hardware dependent. These can, however, be used as a basis for developing new robot languages if concern for quality software design is maintained.

A quality editor/word processor software package is a must for software development, documentation, and reporting.

Sensory Data Processing

The only arguments against the use of a particular sensor are its cost in terms of software overhead, required computing power support, time to process the sensor's data, fit on robot, weight, robot capability without the sensor (which may be an argument for the sensor), external equipment/personnel support required to use this sensor, and money (8:25).

The major robot sensor categories are:

1 Proprioceptors (sense position);

2 Touch;

3 Proximity;

4 Range;

5 Force;

6 Movement;

7 and Vision (really only a subset of the vision that humans experience).

Sensor Error

Sensor errors may be due to changes in sensor characteristics over time, quantization error, or sensor susceptibility to noise of some form. Filtering techniques may therefore have to be incorporated to compensate for or minimize the effects of noise.

Crowley has proposed a computational paradigm or model for three dimensional scene analysis (17). He explains that

multiple sensor systems may be used to gather information about a robot's environment and a sensor model of the environment developed. Models from many sensors are combined to create a combined or composite model that can change with a dynamic environment. This composite model is then used to solve a mobile robot's problem of global navigation, local navigation, and position estimation (18).

What is a Robot

A robot is a device that performs functions normally ascribed to human beings, operates with what appears to be almost human intelligence, or is a mechanism guided by automatic controls (19:744). Industrial robots generally consist of an arm bolted to a platform with an end effector (gripper, spot welder, drill, or special tool) affixed and which is controlled by a computer. A robot is distinguished from a Numerically Controlled (NC) machine (such as an automatic lathe) in that a robot's actions are determined by sensor feedback and not just a sequence of computer instructions. Most mobile robots still remain in research labs because of the demanding requirement to have some form of vision to allow obstacle avoidance and object identification to allow a solution to the mobile robot navigation problem. New forms of vision based on range and direction information may soon allow mobile robots to function in environments previously requiring human workers.

III. MARRS-1 Design

Overview

One of the major efforts of this thesis has been to develop hardware and software to control and communicate with the AFIT MARRS-1 robot. Additionally, three important steps were taken to improve the robot. First, the robot was taught and run thru a simple sequence of operations to identify the errors involved with moving the robot in various directions. Second, the robot was then modified to make optimum use of its sensors and to eliminate where possible the errors identified in the first step. And thirdly, a software development system was established to aid in the design, testing, and maintenance of the robot and its subsystems.

After a period of hardware evaluation, mechanical redesign, fabrication, and electronics upgradeing was completed, the remaining task involved many iterations of program development, testing, data analysis, and program modification based on test results.

A series of Robot Integrated Operation Tests (RIOTs) were then performed that have great value in many key areas. The tests establish a benchmark that can be used as a point of reference for further work. In addition, if the errors in a particular device are consistently similar to previous test cases, then error compensation is relatively simple.

If on the other hand, the errors are random, then much more emphasis must be placed on multiple sensor feedback. The tests may be expanded as the mobile robot project continues and should be updated as automated tools are made available (or developed). The objective of the tests should not only be to demonstrate a capability but to also identify deficiencies that may exist in the robot and to what extent.

Familiarization with the AFIT HERO-1 Robot

Before a prospectus for this thesis could be submitted, some familiarity with the AFIT HERO-1 robot built by Lt. Owen was necessary (see figure 3.1). What could the robot do? What would be the next step in developing a truly autonomous mobile robot? Could the robot be made autonomous? The answers to these questions would be the driving force in determining the direction of this thesis.

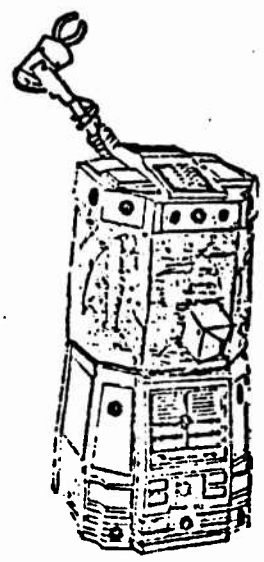

Figure 3.1 AFIT HERO-1 Robot Built by Lt. Owen

41

What Could the AFIT HERO-1 Robot Do?

The AFIT HERO-1 robot had an arm with 145 angular degrees of movement, a wrist with two axis of motion, and a two claw gripper. Locomotion was developed from a tricycle gear wheel configuration with the front wheel the only wheel actively propelled and steered plus or minus 90 degrees from center. The drive of the front wheel had three speeds in both the forward and reverse directions. There were two levels to the body with the top level being able to turn plus or minus 178 degrees. Additionally, the robot had a Votrax SC01 speech synthesizer, a single three degree beamwidth ultrasonic sonar range finder in its head with separate transmit and receive transducers, a calendar with clock, a 256 level light intensity sensor, a 256 level sound volume sensor, and an ultrasonic motion detector. Lt Owen had added a laser barcode reader and 15 Polaroid type ultrasonic sonar range finder transducers. The robot had an impressive list of resources for mobile robotics research, could make crude maps of its environment, and move about randomly without hitting obstacles under self control. Yet, the AFIT HERO-1 robot had some major deficiencies.

Deficiency Identification

Initial investigation into the opportunities for improving AFIT's mobile robotics research revealed the following:

The ability to rapidly develop and debug software was seen as one of the most important improvements necessary for the AFIT mobile robotics research environment.

The front wheel design of the HERO-1 robot needed to be improved since the steering gearbox bearings wore excessively over a short period of robot use. The bearing wear and the additional weight from the laser barcode reader distributed high in the robot's body caused the robot to be mechanically noncompliant, nonrepeatable, and top heavy (unstable). Motion of the robot now became random since commands to the stepper motor controlling the steering of the front wheel, were sent from the robot's computer and assumed to have been obeyed, when in fact, it was very easy for small impeding forces to withstand and overcome the torque of the steering stepper motor. Thus, robot steering and position estimation algorithms were defeated. This condition could have been avoided in part by determining the position of the steering shaft explicitly with a sensor and implementing a closed loop feedback system.

The AFIT HERO-1 robot Polaroid ranging system was not as fast in gathering data as it could have been since only one transducers could be used at a time.

The creation of a sonar range map from data gathered by the AFIT HERO-1 robot required undesirable human intervention to:

1. Determine the robot's heading for each sonar sample period.

2. Provide a robot position correction factor for each sonar reading. The barcode that was read by the robot was taped to the floor and was from one and a half to two feet away from the center of the robot. Thus, position of the robot was loosely based on the number appearing on the barcode. The position of objects in the test environment was based on data from the sonar system which was not firmly referenced to the barcode taped to the floor.

3. Draw the two dimensional (birds eye view) map post mission in a form useful to humans from sonar data, barcode position information, and notes taken by human observers during the mission (or test run).

The AFIT HERO-1 robot was then redesigned, rebuilt, and renamed the AFIT Mobile Autonomous Robot Research System (MARRS-1) and is shown in figure 3.2.

System Level Description

The overall system structure for control of MARRS-1 is shown in figure 3.3. Note that the vertically integrated control structure from the external computer to the Nav Computer to the Drive computer is only one of many configurations possible. The RIOTs of chapter 5 used this structure minus the control shown from the Nav Computer to the Drive Computer.

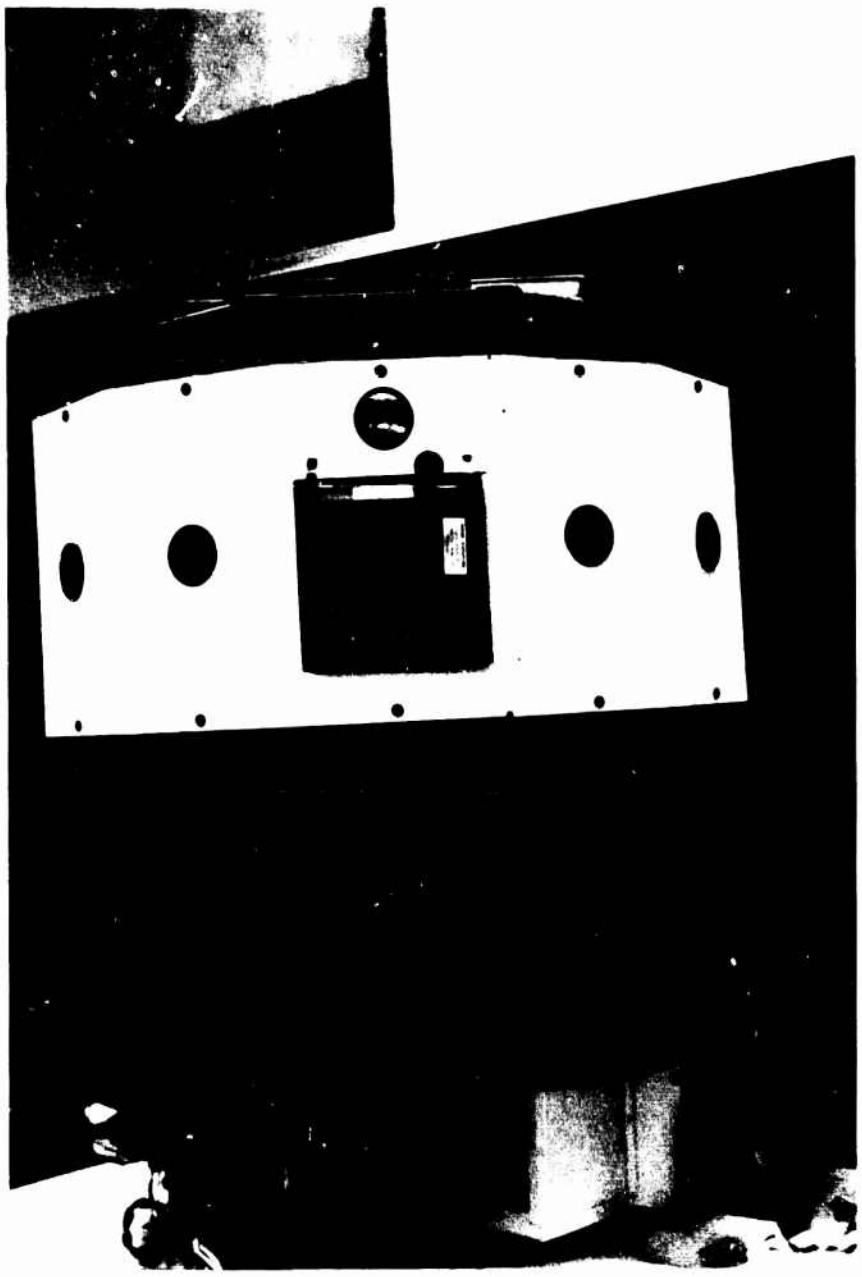

Figure 3.2 AFIT Mobile Autonomous Robot Research System (MARRS-1)

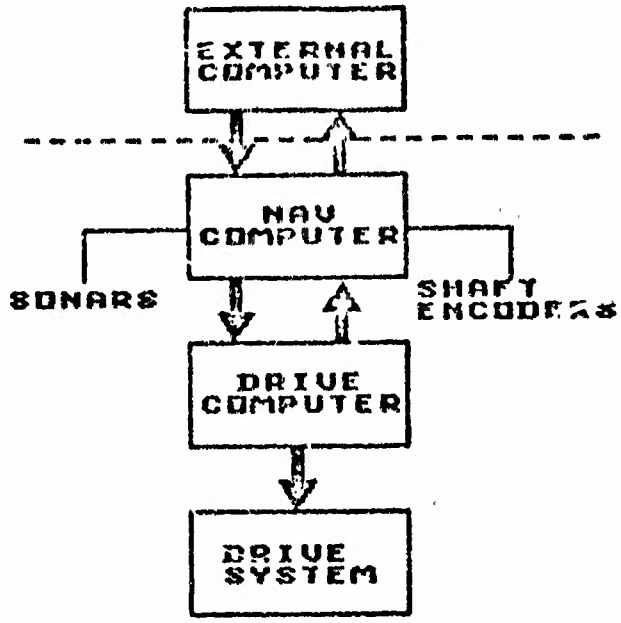

Figure 3.3 MARRS-1 Control Structure

Design Philosophy

Several key factors have molded the design of MARRS-1 into its final form. The first and foremost important design criteria was: Never discard a capability, only add to or enhance the original design. The second design criteria was to treat all system components and sub-elements as black boxes with standard interfaces (in this case serial RS-232). Modularity and expansion was always kept in mind as systems were designed and developed. Hardware implementation of a given task was always chosen over software (if a trade-off existed) to alleviate unnecessary burdens from the CPU.

Mechanical Design

The MARRS-1 robot is 29 and a half inches high, 21 and a half inches in diameter at its widest point, has two decks with 12 sides each, an improved tricycle configuration with a front wheel only drive system, separate shafts for each rear wheel, and a low slung 8 gel cell battery compartment. It has retained all the features of the HERO-1 robot except those modified to improve performance and the arm. The arm was intentionally left off MARRS-1 since the intent is to work toward solving mobile autonomous robot problems and not fixed arm problems. Once a good autonomous mobile platform has been developed, it will become desirable to add a quality robot arm with special end effectors. The twelve side design grew out of an attempt to have symmetrical sonar coverage at two levels erroneously thinking that the beamwidth of the Polaroid sonar transducers was 30 degrees when they are more like 10 to 15 degrees. The twelve side design impact on the sonar system will be discussed later.

Drive Computer

The original HERO-1 contained a MC6808 computer system with no RS-232 serial capabilities. The Virtual Devices Inc. MENOS-1 MC6801 upgrade CPU board enhanced the HERO-1 and gave it RS-232 capability (at 300 baud however) and tremendous new programming possibilities. The MENOS-1 ROM was modified to support 9600 baud rate communications

(see Appendix E). It is now possible to program the Drive Computer in the C language, in Virtual Devices tokenized Vamp language, in HERO-1 learn mode (teach pendant), in HERO-1 Robot language, and in 6801 Assembly language (a superset of the 6800 family with internal 16 bit operations). The Drive Computer (Menos I upgraded HERO-1 computer) is described in Virtual Device's Menos I user's manual, Virtual Devices Robo C user's manual, Heathkit's HERO-1 documentation, and in Appendix E.

Navigation Computer

The Navigation Computer is the keystone of MARRS-1. It controls both the Optical Shaft Encoder Subsystem and the Sonar Subsystem.

Serial RS 232 communication links are provided from the Nav Computer to both the Drive Computer and an external computer. Programs can now be cross assembled and down-loaded from an external computer via serial ports to either the Nav or Drive computers on the MARRS-1 robot. In addition a third serial interface connects the Nav Computer to a laser 3 of 9 barcode reader enabling MARRS-1 to run software developed by Lt Owen. However, the laser barcode reader was not used for the Robot Integrated Operation Tests (RIOTs) (chapters IV and V).

Nav Computer Hardware

The digital portion of the Nav Computer is centered around Motorola 6800 family devices (see Appendices F and G). The operating system fits entirely on an 8K ROM with room to spare. An additional 8K ROM is located in parallel with the base page 8K RAM. System initialization software and page select circuitry load into the base page 8K RAM the contents of the base page 8K ROM after any hardware reset or call of the subroutine labeled ROMLAYRAM. A full contiguous 48K of static RAM exists on board. Input and output devices are memory mapped as is the case with all Motorola 68XX, 68XXX devices.

Nav Computer Software

MARRSBUG (see Appendix A and D) is an interrupt driven, heavily modified serial version of Motorola's MIKBUG and American Microsystem's PROTO operating systems. Data from the Nav Computer's Sonar and Optical Shaft Encoder subsystems is constantly being updated by a maskable hardware interrupt handler and made available to any user programs that run on the Navigation Computer. Hence, the net effect of the MARRSBUG interrupt driven data acquisition system is transparent to the user. The operating system is flexible enough to allow changes to vectors and constants which are loaded into system RAM on power up. An important feature of MARRSBUG is that on power up, the system performs a RAM check to verify where

the largest contiguous block of good RAM is located and updates the system RAM vectors appropriately. Additionally, numerous callable subroutines, software interrupts, and system utilities exist within the ROMs to aid the development of application programs for the Nav Computer (see Appendices A,B,D, and N).

Optical Shaft Encoder (OSE) Subsystem

The OSE Subsystem is perhaps the most important of the two Nav Computer subsystems (although one subsystem cannot perform to its utmost without the other). A 1200 count per revolution OSE is placed on the shaft of each rear wheel (two independent shafts) and on the front wheel steering shaft. By maintaining the distance traveled by each rear wheel, both heading and position information (relative to initial heading and position) are readily obtainable by calculating simple trigonometric equations (see Chapter V). The instantaneous steering position of the front wheel is maintained by subtracting the clockwise and counterclockwise counts of the front wheel steering OSE.

Cumulative counts are required to integrate this sensor data into the Navigation Computer. Thus, an incremental encoder was chosen. The Datametrics K3 encoder (see Appendix K) provides both incremental pulses and two channels which are 90 degrees out of phase with each other. With the proper interface circuitry,

this phase relationship enables the robot to distinguish between forward and reverse motion of each rear wheel.

A Motorola 6840 Programable Timer/Counter chip, in conjunction with a DM9602 dual precision one shot multivibrator, provides an optimum circuit to interface each OSE with the CPU (see Appendix G, Figure G.15). By using a 6840 as a counter (of which there are three 16 bit down counters on each chip) the burden of keeping track of continuously rotating wheels is removed from the CPU.

The DM9602's determine wheel direction (forwards or backwards). This is accomplished by testing for a low signal on one OSE channel and a negative transition on the other OSE channel. The 6840's act as divide by 64 counters which equates to one inch of wheel travel. When this distance has been reached, an interrupt is generated and a variable counter in system RAM is incremented (cumulative counts). Since the 6840 is programable, this divide by XX value may be modified to suit the user's scale factor and precision needs (see chapters V and VI).

Ultrasonic Sonar Subsystem

The AFIT MARRS-1 robot utilizes a simple vision system to aid in the solution of the mobile robot point to point navigation problem. The system acquires range and direction information from 32 polaroid sonar transducers attached to the robot's exterior.

Figure 3.4 illustrates the placement of 24 of these transducers on the robot as seen from an overhead view.

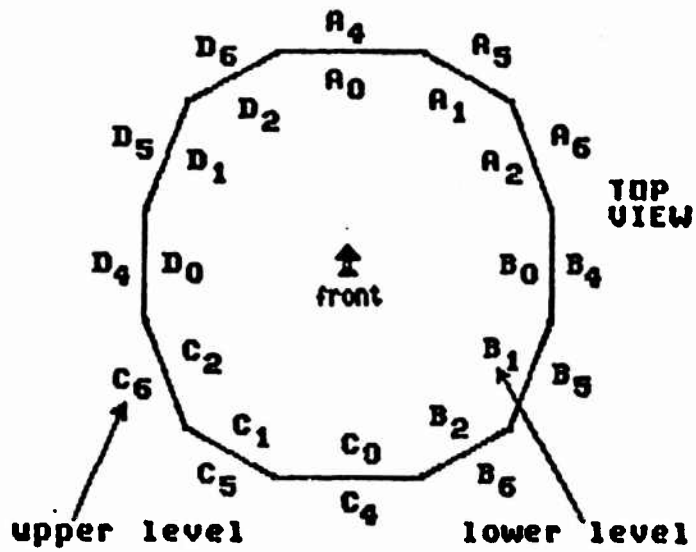

Figure 3.4 Sonar Transducer Locations

The robot's sonar sensors are divided into two different groupings by physical location on the robot or into four different groupings according to their attachment to one of four sonar range boards (Group A, B, C, or D). The lower body deck houses sonar transducers labeled AØ, A1, A2, BØ, B1, B2, CØ, C1, C2, DØ, D1, and D2. The upper body deck is comprised of sonar transducers labeled A4, A5, A6, B4, B5, B6, C4, C5, C6, D4, D5, and D6. There are an additional eight transducers in the head of the robot but

are not used in the RIOTs (Chapter V, Chapter VI). The selection of these eight transducers is however supported in the MARRS-1 operating system. The lower and upper body decks have 12 equal sides. Each side points 30 degrees away from its two neighbors on the same deck. The drive computer can rotate the upper deck plus or minus 178 degrees by controlling a stepper motor. Each sonar transducer is electrically connected to one of four sonar range boards (Sonar Board A, Sonar Board B, Sonar Board C, and Sonar Board D) by means of coaxial cable to one of 32 dual inline package (DIP) relays. Transducer selection is accomplished by energizing a DIP relay.

Only a maximum of four sonar readings are valid during a sonar sample period (one from each sonar range board). If multiple paths exist between a range board and its associated transducers then direction information is forfeited and maximum detection range is attenuated. It may be useful however to energize more than one transducer at a time and establish a minimum distance for obstacle avoidance. In this mode of operation, a full 360 degree coverage can be obtained each sample period if the user is willing to disregard the direction information. Distance information can be obtained from four mutually exclusive quadrants with one quadrant covered by each range board by turning MARRS-1's upper deck 15 degrees clockwise.

Scan patterns may be established to give discrete 360 degree coverage (with individual readings corresponding to each 15 degree segment) by selecting only one transducer of six attached to a range board. Range readings are taken from one, two, three, or four range boards during a sample period and then a different combination of transducers are selected during subsequent sample periods until receiving range readings from all 24 transducers.

By carefully choosing the transducers selected, separations of 90, 120, or 180 degrees between selected transducers may be achieved during each sample period when four, three, or two range boards are used during the sample period respectively so as to minimize the possibility of intersonar interference.

Software Development Support

An H89 running CP/M was chosen to do the cross assembly and program development due to the large amount of software supported by it and the abundance of H89 and CP/M systems at AFIT. A number of cross assemblers (running under CP/M) were found for the 6800 family of processors. Two of the cross assemblers were even in the Public Domain. In contrast, it was difficult to even find a 6800 based system to do software development work on for the existing HERO-1 computer let alone the software tools such as assemblers, compilers, and editors to do the job.

Most software development efforts for MARRS-1 took advantage of Virtual Devices Robo C compiler and Robo Assembler.

The next best alternative to the nonexistent universal robot programming language was to develop a library of robot software routines. These are generic in nature so that they may be combined to form larger modules of software. A MARRS-1 Nav Computer user manual is provided in Appendix N. Software provided by Virtual Devices for Menos I, Robo C, and Robo Assembler contain many excellent routines for controlling the original HERO-1 resources and the 6801 upgraded Drive Computer. However, autonomous operation of MARRS-1 will require integrated control of the Nav Computer, Drive Computer, subsystems, resources, and possibly sensors and computers yet to be developed.

IV. MARRS-1 System Integration

Once the MARRS-1 design was completed, a number of projects were tackled in order to bring the robot to a point where it could be tested as a system. Specifically:

1. The new two deck, twelve sided body, battery compartment, reinforced front wheel, and rear wheel assemblies were fabricated by the AFIT Shop Personnel.

2. The robot was painted red white and blue so as to create interest in the goals of the thesis and for patriotic impact.

3. All electrical wiring for the original HERO-1 was replaced with longer cables since the electronics were now mounted on swing out doors to allow ease of access for modification or maintenance.

4. Operation of the robot with the original HERO-1 electronics and new wiring was verified before installing the MENOS-1 6801 upgrade computer. It became evident that the modification to the front wheel (see figure 4.1) had made the robot's movements repeatable and compliant to program command. On six different test runs the robot was able to return to the same spot (within three inches) after going over a 50 foot figure eight course in the HERO-1 learn mode.

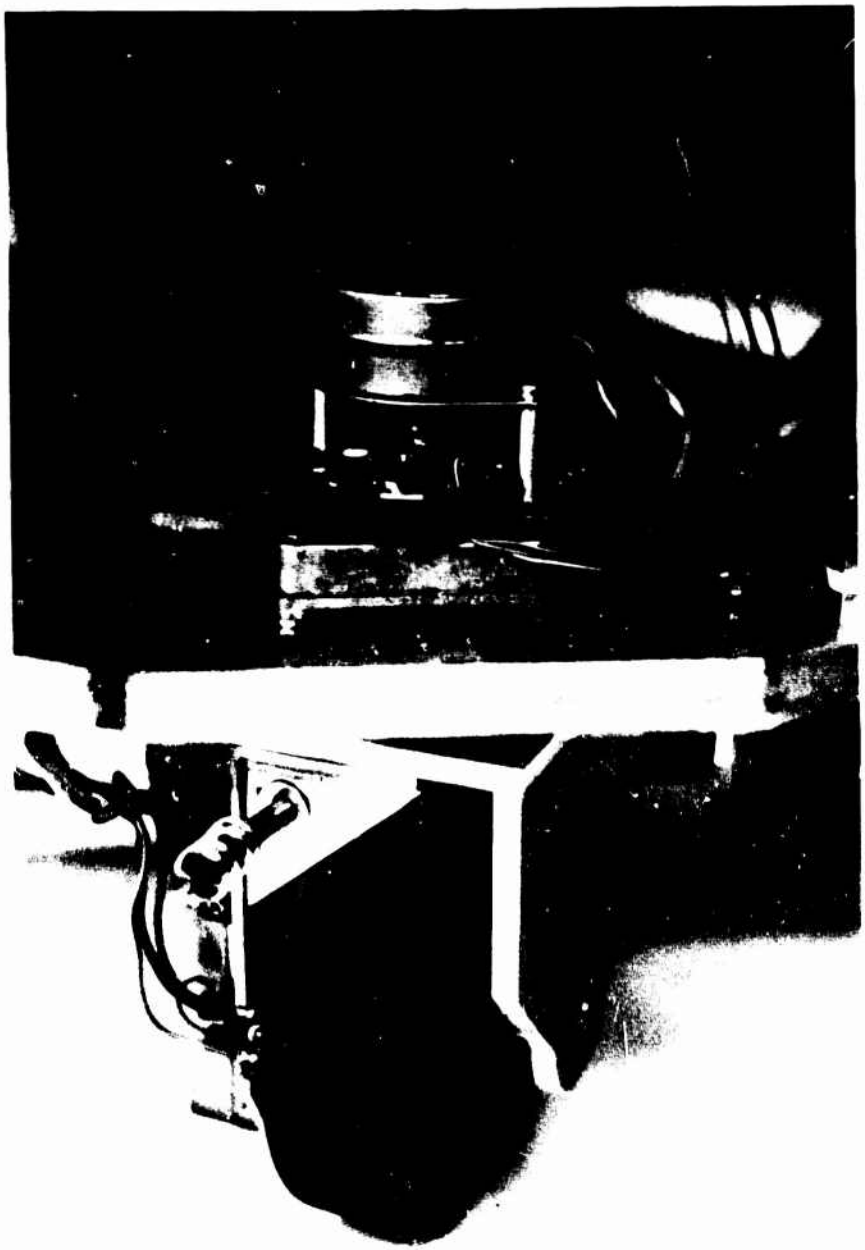

Figure 4.1 Modified Front Wheel Assembly

5. The MENOS-1 upgrade was then installed and tested. Proper operation of the original HERO-1 electronics and the new serial communication port was verified by connecting the robot to the lab H89 computer. The resulting combination of robot electronics was named the Drive Computer so as to distinguish it from the electronics yet to be added. The Input/Output (I/O) decoding scheme for the Drive Computer was extended (as shown in Appendix H) to allow further I/O expansion.

6. The Optical Shaft Encoder (OSE) Subsystem was built, installed and initially connected to the Drive Computer thru a 40 pin connector. In spite of extreme efforts to be careful, four glass encoder disks were cracked or broken while trying to install the OSEs (Appendix K) on the front wheel steering shaft (see figure 4.1) and the rear wheel shafts. The alignment of the OSEs took on the order of four hours for each encoder. What is needed is an encoder that that is sealed, prealigned, small, inexpensive, and connects to the shaft with a flexible linkage.

7. The Nav Computer was wirewrapped onan Augat prototyping board and hardware/software debugged using a Hewlett Packard 1610A logic analyzer. The OSE Subsystem was disconnected from the Drive Computer and connected instead to the Nav Computer with the Sonar Subsystem. The two subsystems conceptually can be used as a crosscheck against each other if a priori knowledge about an environment is

given and function optimally if the subsystems are connected to the same virtual computer.

8. The Sonar Subsystem was connected and debugged on the Nav Computer only after proper operation of the computer (CPU, ROM, RAM, and interrupt driven I/O devices) was verified.

Sideline Activities

Many side issues, projects, and activities consumed time during the thesis and in their own way contributed to the success of the effort. These included:

1. Participation in the 10th Annual Dayton International Air Show representing AFIT with the newly painted and rewired MARRS-1 robot.

2. Taking MARRS-1 to the National Explorer Scout Fly-In at Columbus, Ohio (once again to represent AFIT).

3. Television, radio, and newspaper interviews, along with presentations to public school groups, kept MARRS-1 (and its creators) busy informing the public about AFIT research.

4. The AFIT Mobile Robotics Laboratory was created during the thesis by scrounging for resources necessary to do this type of hardware/software development project. The physical space of the lab was absolutely essential for the success of the thesis. The floor of the test area had to be leveled by using wall plaster to fill in holes and depressions.

5. Two other computer systems were built during the thesis effort to support software and hardware development. A Motorola Exorciser and a 6802 based printer controller card (previously developed for an AFIT project) were the only 6800 family computers in the school. Both needed extensive modification and rehabilitation to meet the development needs of the thesis.

With the robot hardware and software development complete, a series of Robot Integrated Operation Tests (RIOTs) were conducted.

Robot Integrated Operation Test (RIOT) Plan

The RIOTs demonstrate the ability of MARRS-1 to keep track of its own location and map out the environment. The RIOTs also identify anomalies (if any) in robot and algorithm operation while they (the tests) manipulate data collected from both the OSE and Sonar subsystems into a form useful for robot obstacle avoidance, path planning, and robot performance benchmarking.

Test Range Environment

The test range used for the RIOTs is part of the AFIT Mobile Robotics Laboratory with dimensions of 13 feet by 25 feet. All doors to the test range remain closed during each test run. Test conditions are broken into two categories; tests without objects in the test range and tests with two objects in the test range (see figures 5.1 and 5.2).

Object number one is composed of a large 3' diameter 2' 7" high cylinder. Object number two is a box with the following dimensions: 1' 6.5" wide, 2' 9.5" long, 2' 3" high. Both objects have cardboard material surfaces. The test range floor is a reasonably flat tile surface. The walls of the test range are painted hardboard. Some minor protrusions such as door knobs, conduit, and molding jut out from the surface of the walls. All walls are assumed to be flat surfaces since the 0.1 foot sonar range resolution of cannot accurately distinguish these protrusions.

MARRS-1 Operating Modes

In order to collect enough data to form a map of the test range the robot is operated in an open loop mode and moved throughout the test range. Two patterns of movement will be tested; a straight line path and a zig-zag pattern. The initial test run location and heading of the robot should be kept the same (in this case X = 2 feet, Y = 7 feet) for ease of setup. Sight tubes, mounted on the robot, aide in the initial positioning of the robot. The upper level head of the robot is rotated 15 degrees clockwise to provide a 360 degree coverage from the 24 ultrasonics transducers with 15 degrees of separation between each transducer. Additionally, the number of sonar transducers selecteddurring each cycle of the interrupt handler varied from test to test. Table 4.1 lists sixteen different test configurations that were used.

TEST #	OBJECTS	PATH	# SONARS SELECTED PER PERIOD
4	TWO	STRAIGHT	2 PER .1 sec
5	TWO	STRAIGHT	1 PER .1 sec
7	TWO	STRAIGHT	3 PER .1 sec
9	TWO	STRAIGHT	4 PER .1 sec
10	TWO	ZIG ZAG	1 PER .1 sec
11	TWO	ZIG ZAG	2 PER .1 sec
12	TWO	ZIG ZAG	3 PER .1 sec
13	TWO	ZIG ZAG	4 PER .1 sec
14	NONE	ZIG ZAG	1 PER .1 sec
15	NONE	ZIG ZAG	2 PER .1 sec
16	NONE	ZIG ZAG	3 PER .1 sec
17	NONE	ZIG ZAG	4 PER .1 sec
18	NONE	STRAIGHT	1 PER .1 sec
19	NONE	STRAIGHT	2 PER .1 sec
20	NONE	STRAIGHT	3 PER .1 sec
21	NONE	STRAIGHT	4 PER .1 sec

Table 4.1 RIOT Configurations

Support Equipment

The following equipment provides the necessary support to conduct this test; the AFIT MARRS-1 robot, Heath H-89 computer with H-27 8 inch disk drive system, Modem 720 communication program, and an RS-232 cable. Post mission processing of the collected data is performed on a TRS-80 (6809 based) Color Computer.

Drive Computer Learn Mode Programs

The learn mode programs shown in tables 4.2 and 4.3 run in the Drive Computer and cause the MARRS-1 robot to perform either straight line motion or a zig-zag pattern within the confines of the test range. (For a more detailed discussion ofrobot interpreter commands the reader is referred to the Heathkit Educational Systems ET-18 ROBOT Technical Manual.)

ADDRESS	DATA	HERO-1 ROBOT LANGUAGE AND MEANING
0400	C3 19 6F	MOTOR MOVE, WAIT ;ABSOLUTE(IMMEDIATE) DRIVE MOTOR SELECTED FORWARD $16F FAST GEAR
0403	8F 00 20	PAUSE (IMMEDIATE)
0406	3A	RETURN TO EXECUTIVE ("READY")

Table 4.2 MARRS-1 Straight Line Drive Computer Program

ADDRESS	DATA	HERO-1 ROBOT LANGUAGE AND MEANING
0400	C3 18 06	MOVE DRIVE MOTOR (HIGH SPEED) FORWARD $06
0403	CC 18 15	MOVE DRIVE MOTOR (HIGH SPEED) FORWARD $15
0406	C3 E8 33	TURN LEFT TO POSTION $33
0409	CC 18 4E	MOVE DRIVE MOTOR (HIGH SPEED) FORWARD $4E
040C	C3 E8 49	TURN STRAIGHT AHEAD
040F	CC 18 1C	MOVE DRIVE MOTOR (HIGH SPEED) FORWARD $1C
0422	C3 E8 64	TURN RIGHT TO POSITION $64
0425	CC 18 22	MOVE DRIVE MOTOR (HIGH SPEED) FORWARD $22
0428	C3 E8 49	TURN STRAIGHT AHEAD
042B	CC 18 12	MOVE DRIVE MOTOR (HIGH SPEED) FORWARD $12
042E	C3 E8 57	TURN RIGHT TO POSITION $57
0431	CC 18 0C	MOVE DRIVE MOTOR (HIGH SPEED) FORWARD $0C
0434	C3 E8 49	TURN STRAIGHT AHEAD
0437	CC 18 0D	MOVE DRIVE MOTOR (HIGH SPEED) FORWARD $0D
043A	C3 E8 58	TURN RIGHT TO POSITION $58
043D	CC 18 39	MOVE DRIVE MOTOR (HIGH SPEED) FORWARD $39
0440	C3 E8 49	TURN STRAIGHT AHEAD
0443	CC 18 17	MOVE DRIVE MOTOR (HIGH SPEED) FORWARD $17
0449	C3 E8 31	TURN LEFT TO POSTION $31
044C	CC 18 18	MOVE DRIVE MOTOR (HIGH SPEED) FORWARD $18
044F	C3 E8 46	TURN RIGHT TO POSITION $46
0452	CC 18 00	MOVE DRIVE MOTOR (HIGH SPEED) FORWARD $00
0455	C3 E8 42	TURN LEFT TO POSTION $42
0458	CC 18 25	MOVE DRIVE MOTOR (HIGH SPEED) FORWARD $25
045B	C3 E8 49	TURN STRAIGHT AHEAD
045E	8F 00 FF	PAUSE
0461	3A	RETURN TO EXECUTIVE ("READY")

Table 4.3 MARRS-1 Zig-Zag Drive Computer Program

Robot Test Procedures

1. Objects (if any) are placed in the test range with their location and orientation documented.

2. Document and mark on the floor the initial heading and position of the robot. Heading is normalized for the program MAPPER (Appendix C) as a value between 0 and 1 as shown in figure 4.2. The (X,Y) location of the robot is represented in terms of tenth's of feet (resolution of 1.2"). The initial location and all subsequent locations of the robot are relative to the mid point between the two rear wheels. Both heading and location are crucial in conducting this test with any accuracy/repeatability and are required for post mission processing of the Sonar and OSE data.

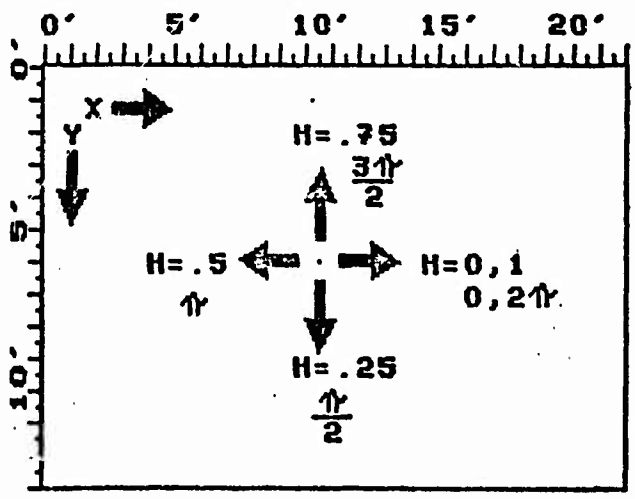

Figure 4.2 MAPPER Heading Convention

3. Straighten out the front wheel and insure that the count at memory location $0026 of the Drive Computer contains the value $49. ($49 is the value for straight forward steering.)

4. Insure that the top deck is rotated clockwise (looking down on robot) by 15 degrees and secured in place.

5. Put MARRS-1 in the learn mode and maneuver it throughout the test range. NOTE: The Drive Computer will operate the robot in an open loop mode for the entire test, i.e. there will be no feedback from the Nav Computer to the Drive Computer as a result of MARRS-1's movements or the environment.

6. After completion of the learn mode, reset the Drive Computer and bring MARRS-1 back to the marked starting position. Insure that the front wheel is straight and location $0026 contains $49. With all of this completed, execute the learned program to confirm that the robot performs adequately. If so, continue. If the robot fails to repeat the learned operation, then go back to step 2 and begin over again.

7. As in step 6, position the robot at the starting point. Now, upload the learned Drive Computer program to an external computer via the serial RS-232 port and save.

8. Before executing the test program, open a file buffer on an external computer connected to the Nav computer.

9. Reset the timer on Navigation Computer to zero.

10. Initialize the Extended Interrupt Handler to select the number of sonars activated per sample period (i.e. one, two, three, or four sonars selected during a tenth of a second interval) and execute the Drive Computer's learned test program (Table 4.2 or 4.3).

11. After each test run, insure that the captured test data is saved on magnetic media in ASCII format before continuing on with the next test run.

Data Collection

Data from each of the subsystems will be gathered every 0.1second via the Extended Interrupt Handler (see Appendix B) and stored into a temporary line buffer in the Navigation Computer's memory as follows:

/time/fw/lw1/lw2/rw1/rw2/A#____/B#____/C#____/D#____/<CR><LF>

Where time = tenth's of seconds count - 2 bytes

fw = front wheel direction - 1 byte

lw1 = left wheel reverse counts - 2 bytes

lw2 = left wheel forward counts - 2 bytes

rw1 = right wheel reverse counts - 2 bytes

rw2 = right wheel forward counts - 2 bytes

Table 4.4 RIOT Raw Data Format

The buffer is then transmitted to an external computer at 9600 baud (in this case an H-89 running M720 communication software). Buffer contents are then stored onto magnetic media for post mission processing.

Test Data Usage

After completion of the entire test all data is then transferred from the H-89 to the Color Computer. Using MAPPER, a mapping algorithm, (see Appendix C) the test data will be transformed into a bit plane graphics representation of the test range. Optical shaft encoder readings determine position and heading of the robot relative to the starting position (calculated with respect to the center between the rear wheels). Sonar transducer readings provide range and direction information about the robots environment from the current robot position (with respect to the center of the robot). This graphics display provides a good first order approximation of the robots environment.

V. MARRS-1Integrated Operation Test Results

Minor Test Problems

Threeminor problems occurred during the MARRS-1 Robot Integrated Operation Tests (RIOTs). However, these three anomalies did not remove the essence of the tests. They are minor and can be overcome. First, the front wheel optical shaft encoder resolution was much greater than was required. The slightest hint of mechanical vibration caused excessive jitter in the signal detected by the photo head assembly. This resulted in erroneous accumulation of counts for front wheel direction. Fortunately MARRS-1 was operated in an open loop mode. The mapping algorithm, MAPPER did not require the data from the front wheel shaft encoder. An example of these erroneous readings can be seen in Appendix O.

The second problem was with the right wheel optical shaft encoder. In spite of efforts to align the glass encoder disk, some reverse direction counts were detected while going forward. This error was of no consequence since all test runs were designed for forward motion of the robot and the MAPPER program disregarded the reverse counts from the left and right wheels. However, Navigation algorithms in general should take into account any reverse counts of either the left or right wheels. For instance, a very tight turn may cause the wheel on the inside of the turn to move

in the reverse direction. The slightly eccentric alignment of the right wheel optical shaft encoder causes erroneous reverse direction counts which may require the construction and installation of a new shaft.

The third minor setback to the completion and final testing of MARRS-1 was the inadequate current capabilities of the sonar power supply. The current surge requirements of more than one sonar transducer activated at once increased the effective internal impedance of the batteries. This reduced the output voltage applied to the sonar range boards (as well as all other subsystems) and hence maximum sonar detection range was reduced to 3.5 feet. An AC to DC power supply was employed to provide additional current drive for the sonar subsystem thus extending the maximum reliable sonar detection range to 7.5 feet.

Mapping Algorithm

The program MAPPER (see Appendix C) takes large amounts of test data and compacts it into an array of 256 by 192 picture elements (pixels) that can be displayed as a map for humans and/or used by a computer for robot control. If the heading of the robot is known at some initial starting point, then all other robot headings can be determined from the counts of the left and right optical shaft encoders. Instantaneous heading calculations may be performed if the initial heading and distances traveled by

each rear wheel are known. The following equation describes this principle (20:163):

$$HB = HA + (L - R)/D \quad \text{rad} \qquad (5.1)$$

Where HB is the current heading of the robot in radians, HA is some initial heading in radians, L and R are absolute distances traversed by each wheel starting from the initial heading position, and D is the distance between the left wheel and the right wheel. It is interesting to point out however, that the initial heading is not absolutely required since all successive heading computations are relative to the first and so on. Naturally with a digital device, a continuous sampling is impossible. Thus the traversed distance of each wheel is broken up into incremental segments. The K-3 shaft encoder has a resolution of 1200 counts per revolution. MARRS-1's rear wheel circumference is equal to 18.75". The units used in the test were inches, thus it turned out that 64 counts on the shaft encoder equalled one inch of travel by the wheel exactly. The effective resolution of the wheels now becomes 18.75 counts per revolution. Just how much resolution do the robot's wheels need for navigation and environmental mapping? These test results show that fine detailed resolution may not be required. However, optimum wheel count resolution has not been considered here and is left as an area for further investigation.

Graphics Plots

The plots shown on the next several pages are the final output from MAPPER. There are perhaps several ways of displaying the data collected from each test run. Figure 5.1 shows a layout of the size of the test range in units of feet. It was in this benign environment that half of the test runs were conducted. Figure 5.2 identifies the location of the two objects used during the other half. As a comparison, figures 5.3 and 5.4 are taken from Lt Owen's thesis and show how he accomplished mapping from a HERO-1(2:VII-6,VII-7). A key point about Owen's work is that precise heading and position information was not available for displaying the relative position of sonar readings. The remaining graphic plots (figures 5.5 thru 5.20) are of the Robot Integrated Operation Tests (RIOTs) and demonstrate that a robot can create a low resolution map of its environment (relative to itself) using ultrasonic sonar as a "vision" device while keeping track of its orientation and location from wheel counts. Each sonar reading is displayed as an arc of 20 degrees at the distance measured from the center of the robot and plotted based on position and heading information determined from rear wheel optical shaft encoder data. The tests are termed integrated since robot performance is evaluated based on all systems working in concert.

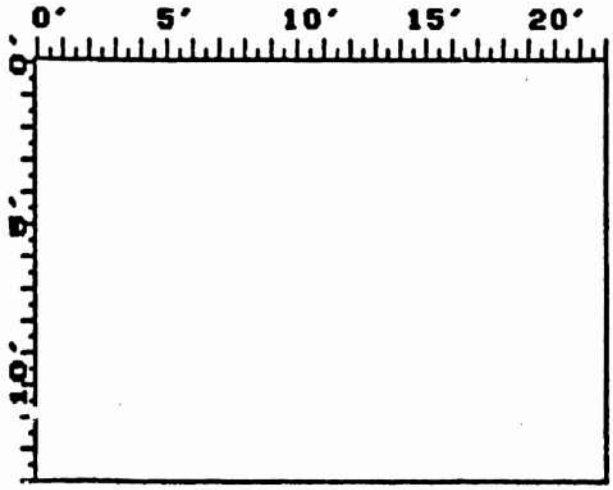

Figure 5.1 Robot Integrated Operation Test (RIOT) Range Layout

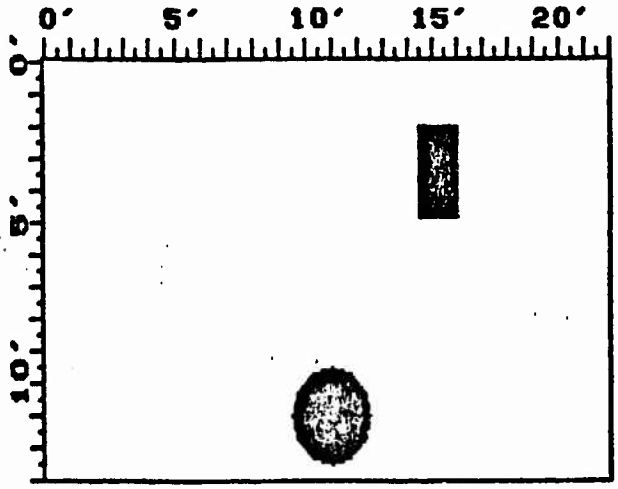

Figure 5.2 Location of Objects for RIOTs with Objects

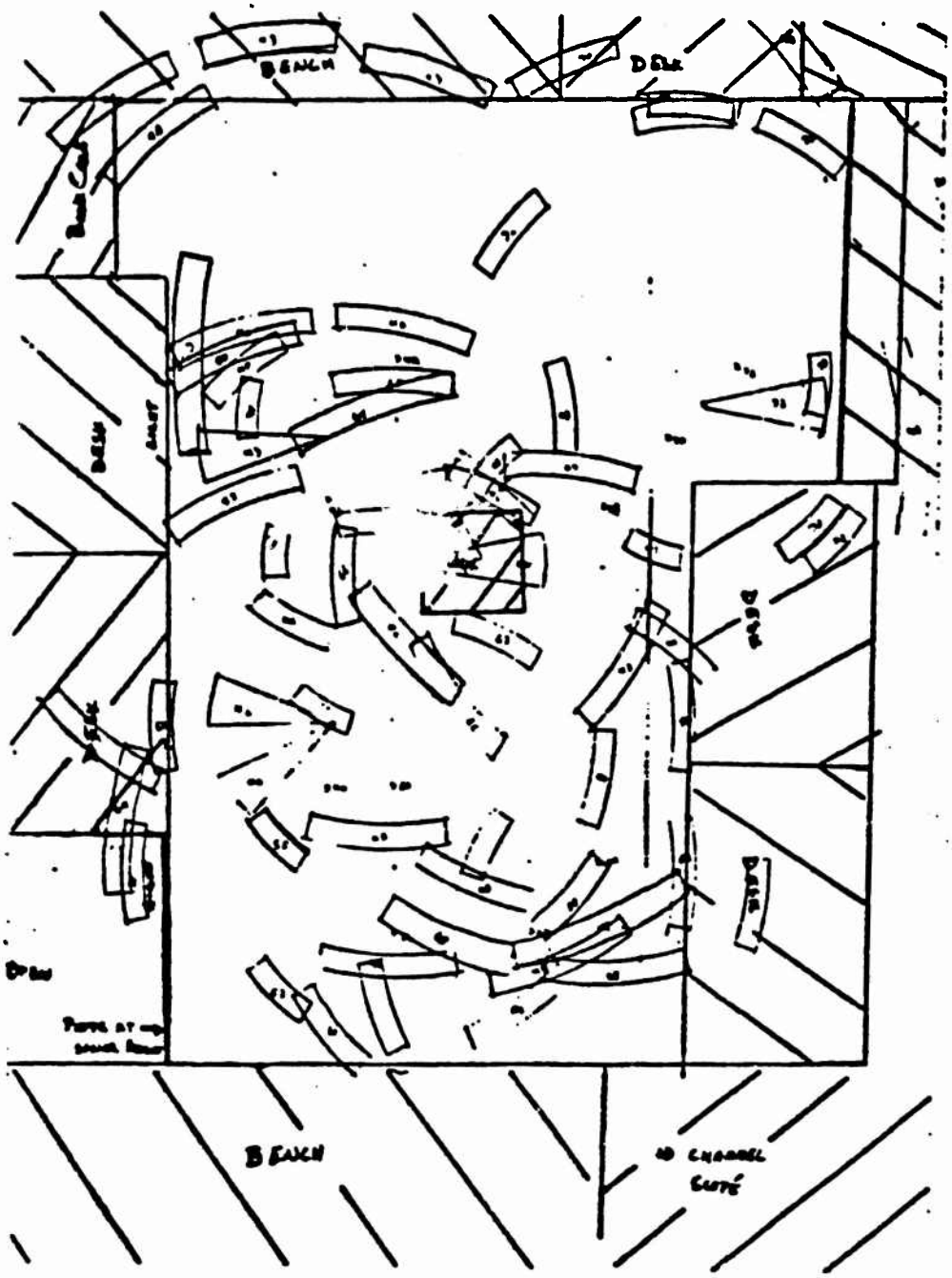

Figure 5.3 Owen Thesis Test Range Layout and Sonar Map

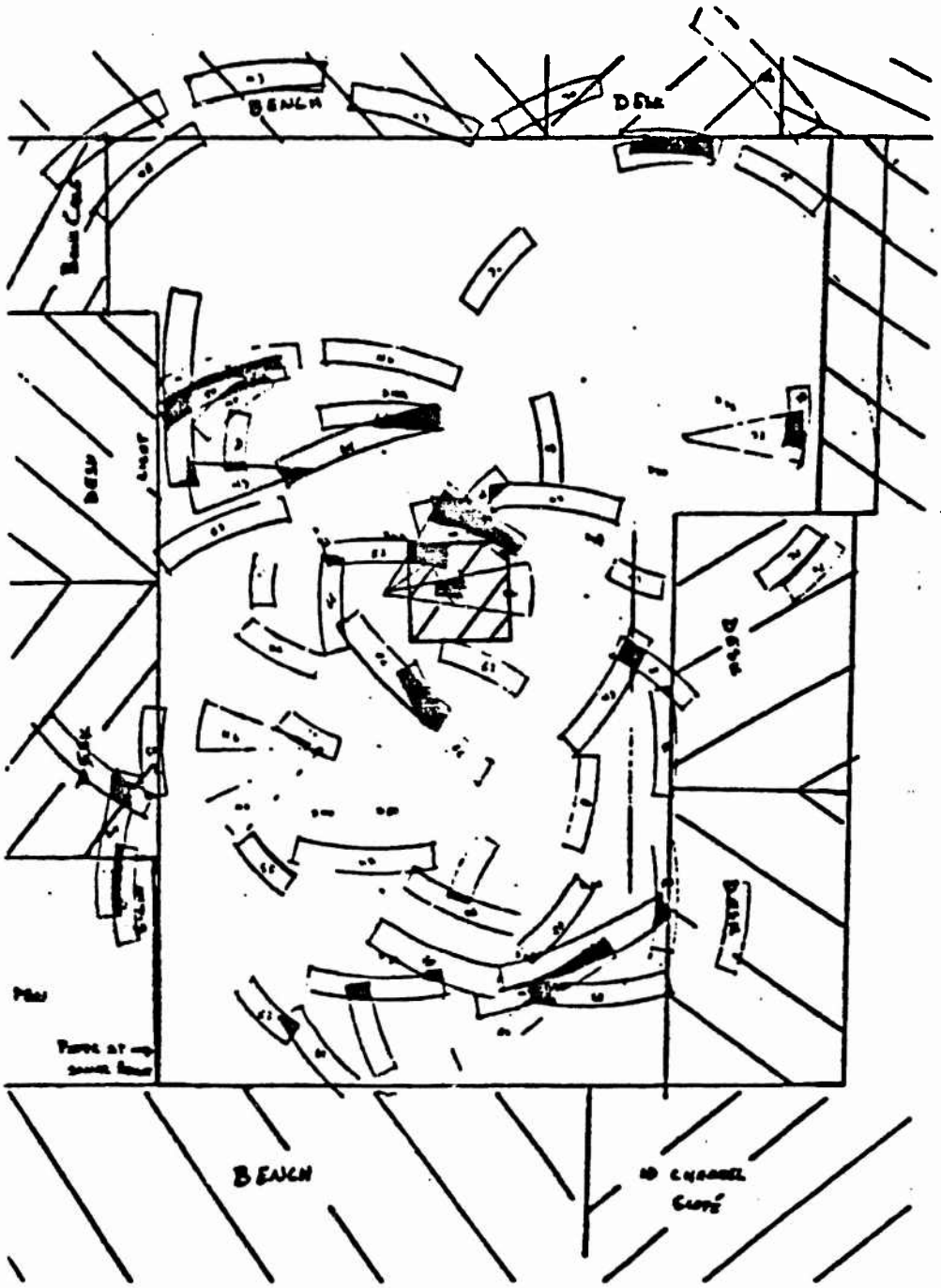

Figure 5.4 Owen Thesis Sonar Map Showing Sonar Coincidence

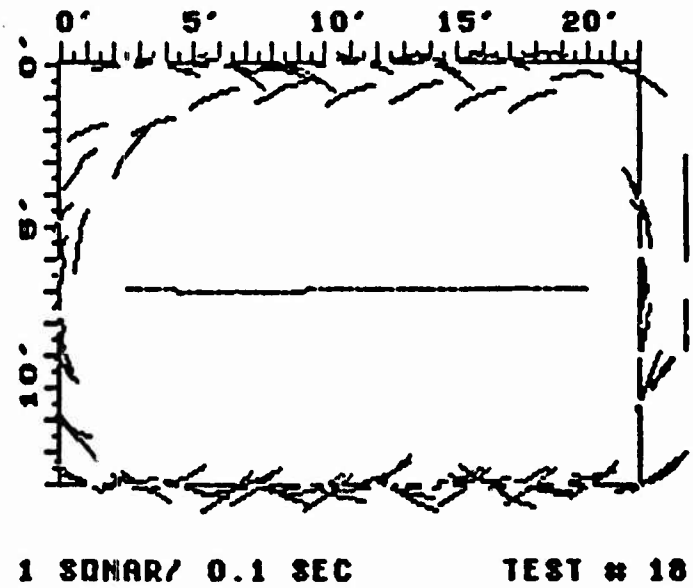

Figure 5.5 RIOT #18: Straight One Sonar at a Time

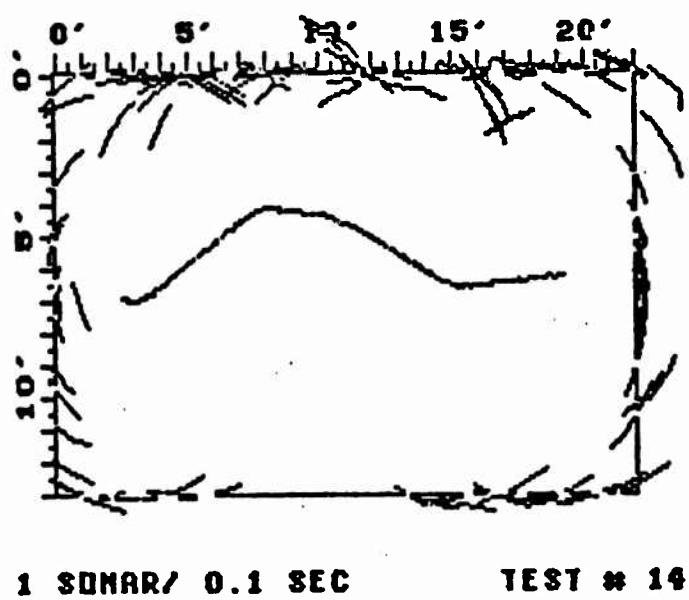

Figure 5.6 RIOT #14: Zig Zag One Sonar at a Time

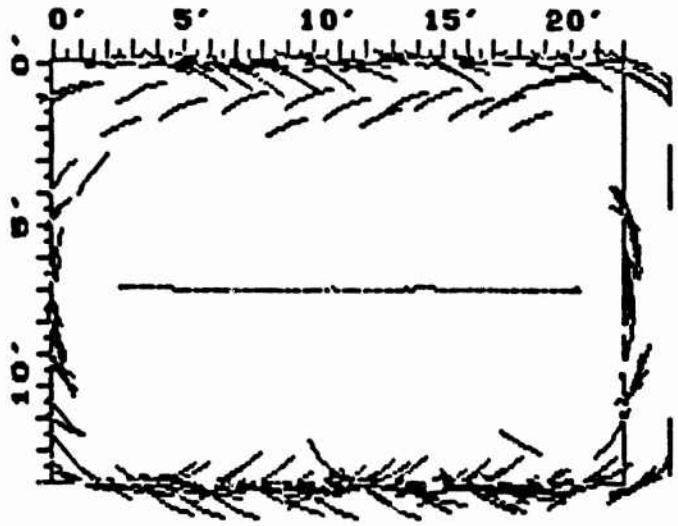

2 SONARS/ 0.1 SEC TEST # 19

Figure 5.7 RIOT #19: Straight Two Sonars at a Time

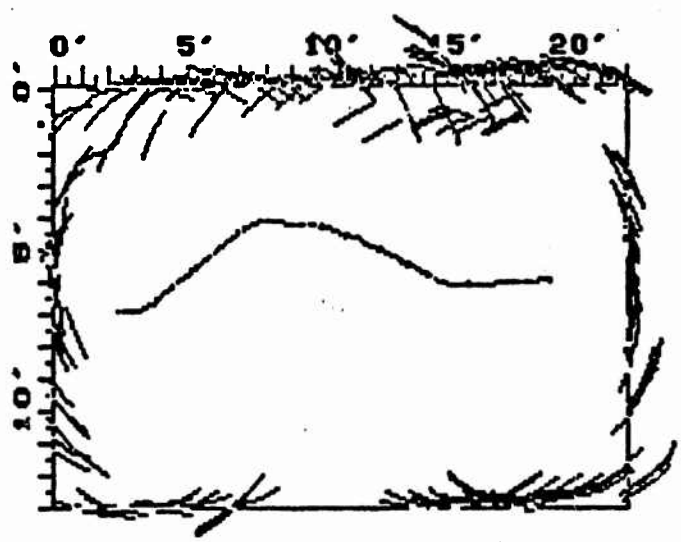

2 SONARS/ 0.1 SEC TEST # 15

Figure 5.8 RIOT #15: Zig Zag Two Sonars at a Time

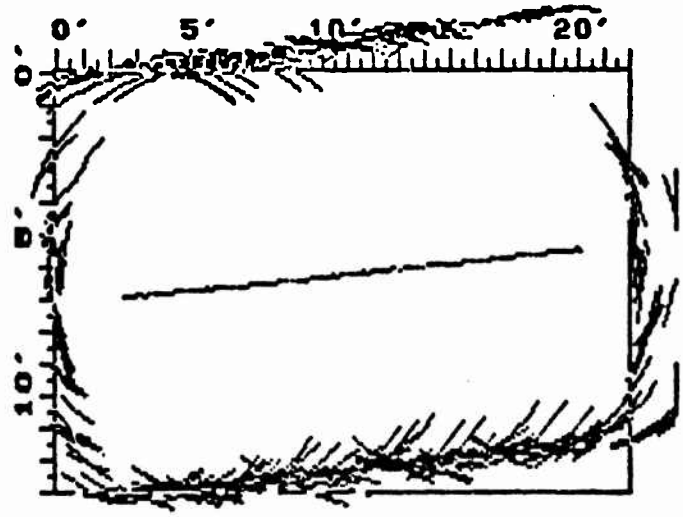

3 SONARS/ 0.1 SEC TEST # 20

Figure 5.9 RIOT #20: Straight Three Sonars at a Time

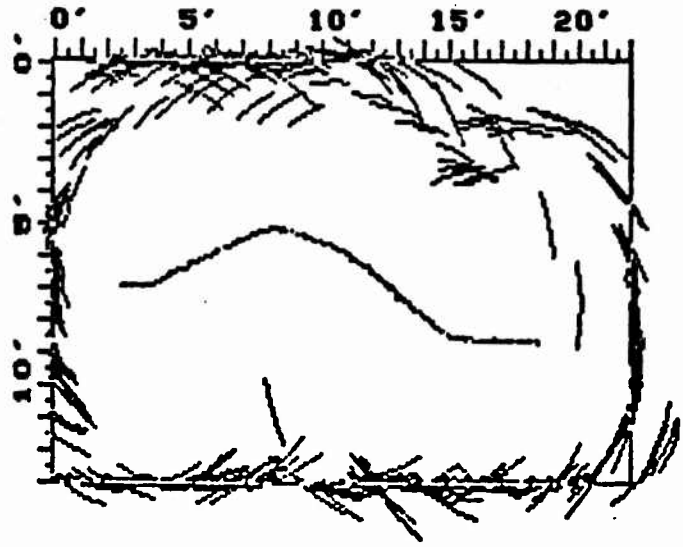

3 SONARS/ 0.1 SEC TEST # 16

Figure 5.10 RIOT #16: Zig Zag Three Sonars at a Time

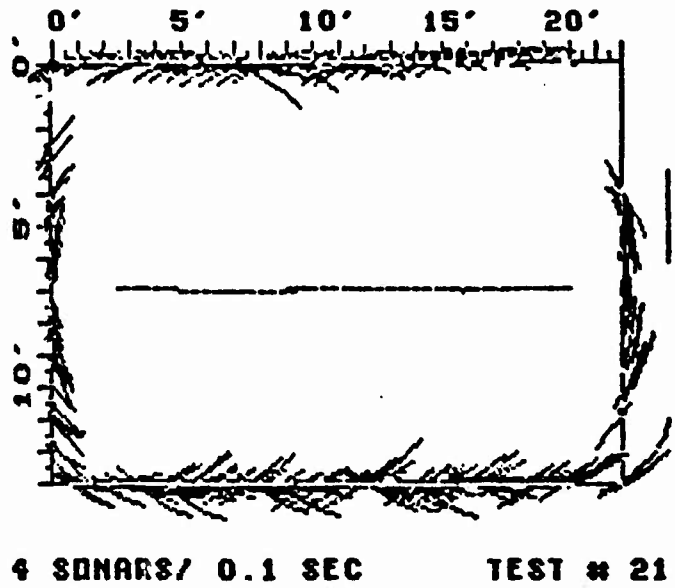

Figure 5.11 RIOT #21: Straight Four Sonars at a Time

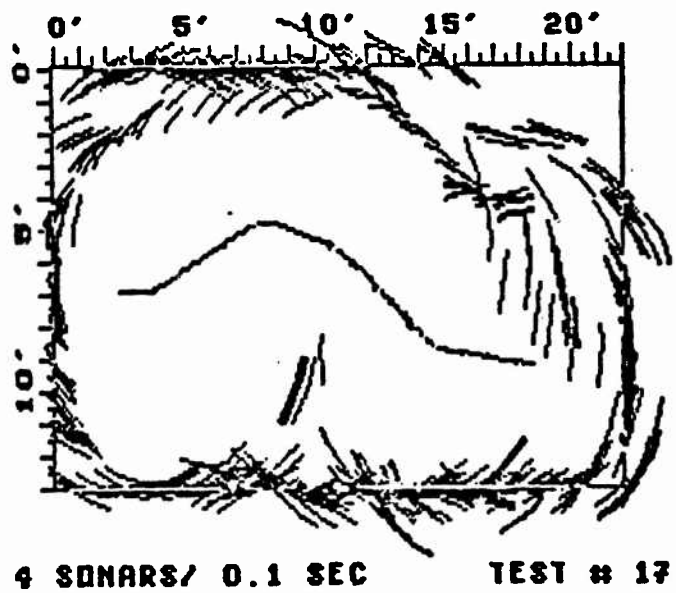

Figure 5.12 RIOT #17: Zig Zag Four Sonars at a Time

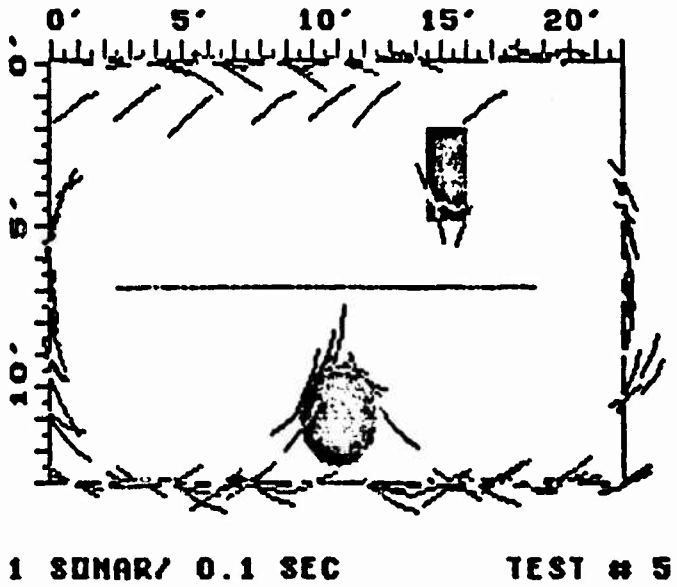

Figure 5.13 RIOT #5: Straight One Sonar at a Time

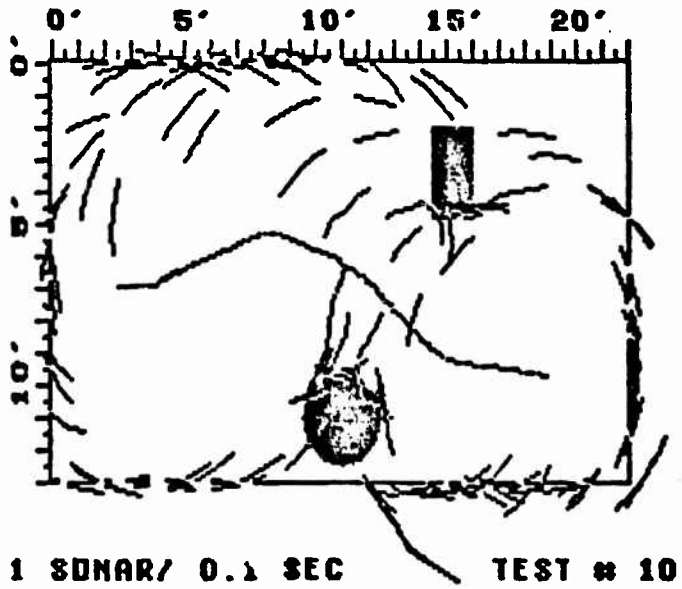

Figure 5.14 RIOT #10: Zig Zag One Sonar at a Time

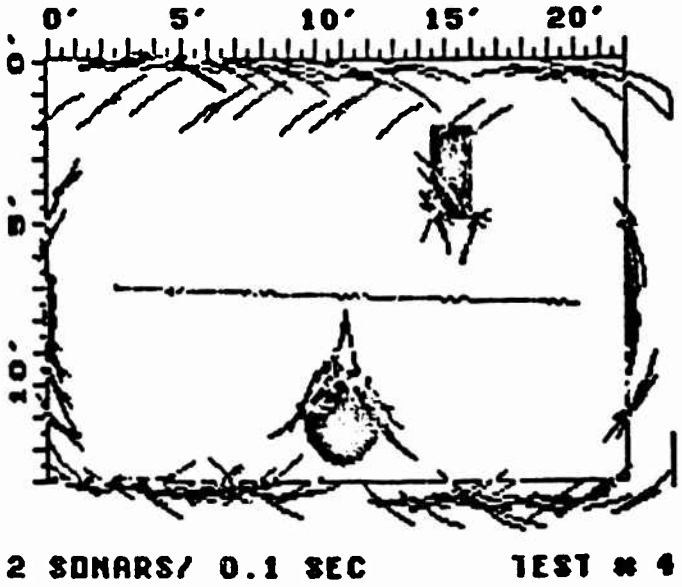

Figure 5.15 RIOT #4: Straight Two Sonars at a Time

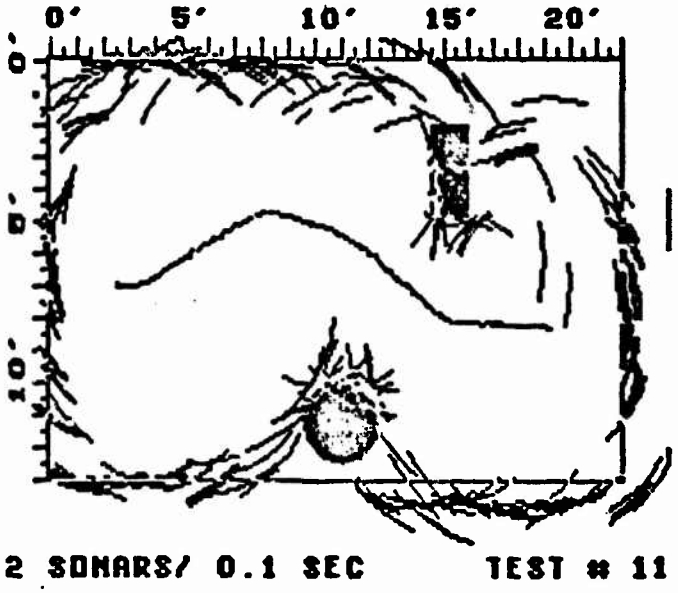

Figure 5.16 RIOT #11: Zig Zag Two Sonars at a Time

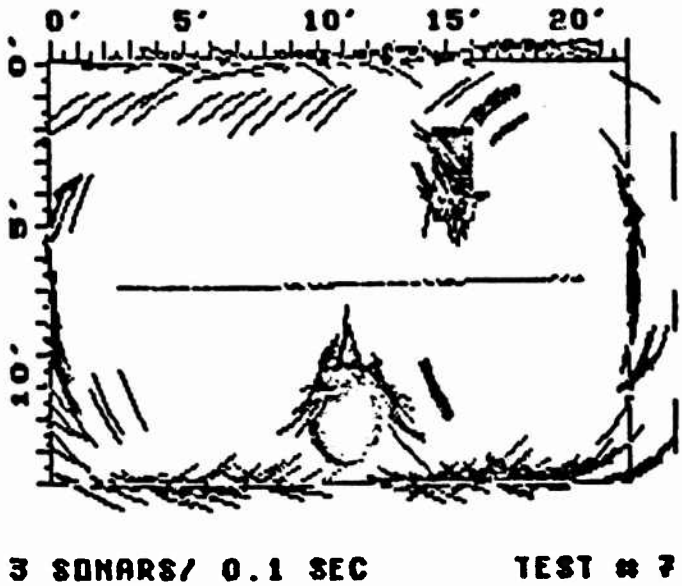

Figure 5.17 RIOT #7: Straight Three Sonars at a Time

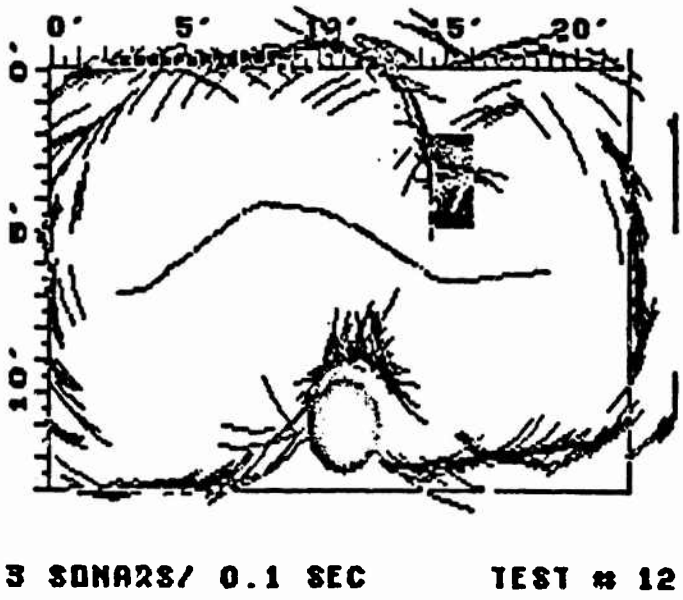

Figure 5.18 RIOT #12: Zig Zag Three Sonars at a Time

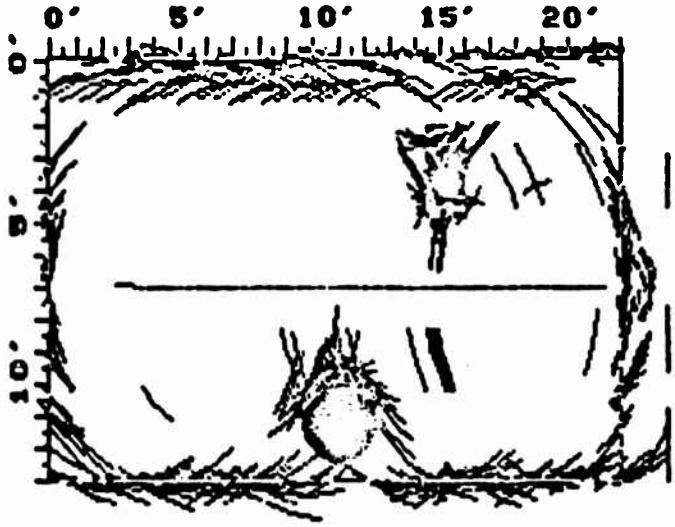

4 SONARS/ 0.1 SEC TEST # 9

Figure 5.19 RIOT #9: Straight Four Sonars at a Time

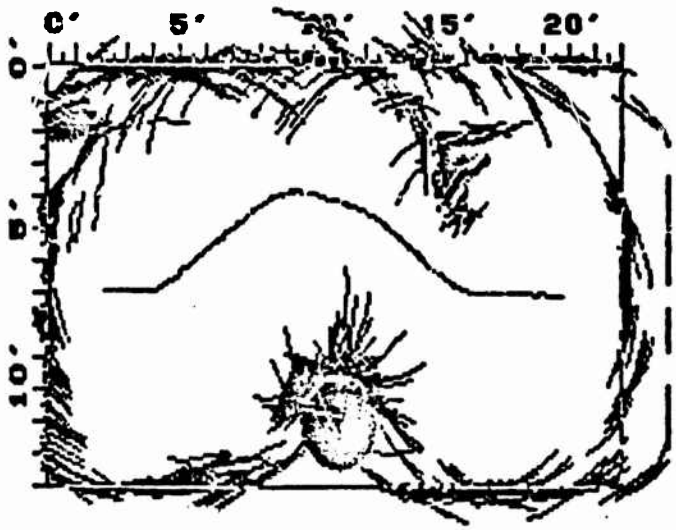

4 SONARS/ 0.1 SEC TEST # 13

Figure 5.20 RIOT #13: Zig Zag Four Sonars at a Time

Discussion of RIOT Results

Each plot from figures 5.5 thru 5.20 represents 14 to 20 thousand eight bit words (bytes) of data like that shown in Appendix O. The data could have been encoded by the Extended Interrupt Handler (Appendix B) and reduced by a factor of four to one, however, the data reduction would have cost increased processing time by the MAPPER program of Appendix C.

Figures 5.5 thru 5.20 are accurate sonar environmental maps as compared to those of figures 5.3 and 5.4 because of the accurate heading and position information coming from the shaft encoders.

The new sonar maps show that robot navigation and obstacle avoidance in simple environments are possible from low resolution sonar vision with accurate position information.

Particular attention should be given to figure 5.9. This map identifies a skew of the sonar map with respect to the test range outline. The skew was a result of having an initial one and a half inches of right wheel travel recorded in the data (see start of Appendix O) when in fact the right wheel travel distance should have tracked the values recorded for the left wheel for straight motion (which was the case for all other straight line motion RIOTs). The difference between the right and left wheel counts was a result of having not reset the Navigation Computer after

preparing the robot for RIOT #20. The skew of figure 5.9 is therefore the result of robot operator error. It does, however, show the effect of initial heading error or isolated wheel slippage with respect to an external benchmark reference system. Note that the sonar map can be accurately created without an external reference since the map is always relative to the robot's own internal heading and position. Therefore, the map created by the robot may require a coordinate transformation to a global or external reference.

Sonar ranges greater than 7.5 feet were disreguarded for all RIOT plots since the power supply problem attenuated the maximum reliable detection for the Sonar Subsystem. Additionally, stray sonar readings are seen in a few plots. Sonar transducer C2 (figure 3.4) appears to have a maximum reliable detection range of about 7 feet and hence, the stray readings from C2 were not deleted with the 7.5 foot filter algorithm in the MAPPER program.

VI. Recommendations for Future Work on MARRS-1

Unlike some products on the market today, MARRS-1 was designed and built with modularity and expansion in mind. In addition, there are a few minor flaws in the original design that can be improved. The following are just some of the recommendations and suggestions for additional work and enhancements that will some day make MARRS-1 a truly autonomous vehicle.

1. Exercise the existing MARRS-1 robot to identify the limit of its usefulness and capabilities.

2. Transport the mapping algorithm MAPPER from an external computer to an onboard computer (either as part ofthe Navigation Computer interrupt handler or on another computer which communicates to the Navigation Computer via RS-232).

3. Design, develop, and interface an on board compass (perhaps using an A to D converter or absolute encoder) to provide MARRS-1 with instantaneous heading information. This sensor data could be used as an additional check to verify data coming from other subsystems and provide initial heading data on power-up.

4. Develop filtering algorithms that provide MARRS-1 with more accurate maps of its environment. Perhaps further characterization of the sensor subsystems is required before this can be accomplished.

5. The entire front wheel assembly requires a re-design effort. The combined mass of the yoke and the drive motor puts too much of a strain on the small gear box and shaft encoder disk mounted above. A larger frame gear box with a similar gear reduction ratio is required to eliminate false readings from the shaft encoder.

6. The MARRS-1 steering shaft feedback uses a high resolution incremental encoder to do a low resolution absolute encoder's job. A low resolution absolute encoder connected to the steering shaft by a flexible link will provide accurate information about the direction of the front wheel without excessive software/hardware overhead.

7. A better power supply for the sonar subsystem is required.

8. Integrate the electronics developed for the MARRS-1 robot structure on a larger heavier frame: a fork lift, a golf cart, or perhaps a rugged all-terrain vehicle used by the U.S. ARMY or coal mine companies.

9. Integrate Captain Glenn Monaghan's robot task planning thesis (AFIT/ENG/84D-47) with theMARRS-1.

10. Investigate the advantages/disadvantages of three wheel, four wheel, and tracked mobility configurations along with different drive and steering control systems as they apply to the mobile autonomous robot problem.

Yet Another Computer for MARRS-1

The next logical progression of MARRS-1 is to provide another computer which will control the functions of all subordinate computer systems. Its function would be much like that of a computer operating system only it would perform path planning based on sensory information fed to it from its subordinate systems and from requirements passed to it by an external computer data link. An onboard MC6809 based Radio Shack Color Computer would be the perfect addition to the droid ensemble. By adding a disk controller and disk drives, the robot becomes a stand alone hardware/software development device (minus a keyboard and monitor which may be connected remotely, or as needed).

There are several reasons for choosing the MC6809 or MC6809E over other microprocessors. First, all hardware and software developed thus far for MARRS-1 is upward compatible with the 6809. Second, with the use of OS-9 (a UNIX derivative) as the operating system, the computer can perform multi-tasking and supervise a multi-user environment. These characteristics are ideal for control of a mobile autonomous robot. Third, hardware/software availability is perhaps the most important issue as discussed in chapter II. The AFIT Mobile Robotics Lab has in its inventory (see Appendix J) a Color Computer with OS-9 and BASIC09. The Motorola Exorciser can also accommodate a 6809 card to enhance lab capabilities.

High level languages such as C open the door to increased routines and utilities that can be used to control MARRS-1. "Fortunately, the 6809 microprocessor, the OS-9 operating system, and the C language form an outstanding combination. The 6809 was specifically designed to efficiently run high level languages, and its stack-oriented instruction set and versatile repertoire of addressing modes handle the C language very well. As mentioned previously, UNIX and C are closely related, and because OS-9 is derived from UNIX, it also supports C to the degree that almost any application written in C can be transported from a UNIX system to an OS-9 system, recompiled, and correctly executed"(21:1-1). Migration toward the 68000 family is also possible by first going to the 6809 and OS-9. There is even a version of OS-9 for the 68000 family of processors making a simplified software transition guaranteed.

Cooperation Needed in Mobile Robotics

Mobile Robotics has the responsibility of bringing many technologies and disciplines together as a unified whole and has two closely related areas of research: 1) Artificial Intelligence (AI), and 2) Pattern Recognition (PR). In their report to the U.S. Army Engineer Topographic Laboratory, researchers from Stanford Research Institute (SRI) made no distinction between AI and Robotics giving instead a unified model of the two as shown in figure 6.1 (22:1).

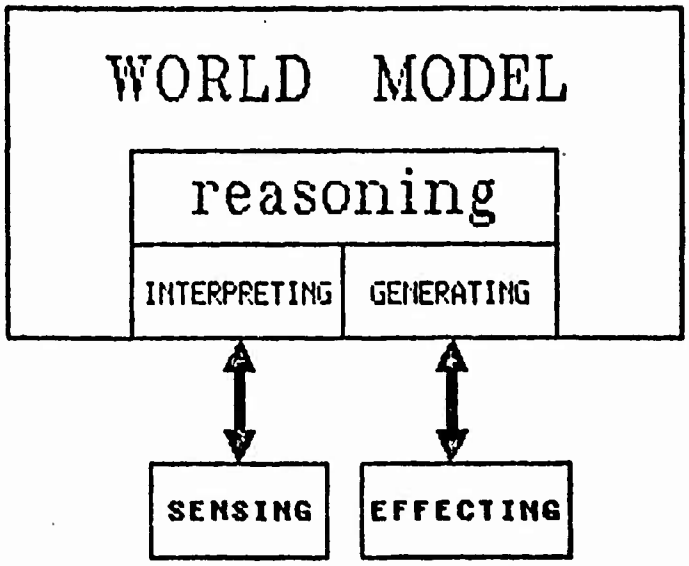

Figure 6.1 Unified AI/Robotics Model

The part of Pattern Recognition (PR) that deals with the gathering and interpreting of sensory information falls in the area of figure 6.1 labeled SENSING<--->INTERPRETING. The AFIT MARRS-1 robot in conjunction with the stereo vision system being developed by Captain James Holten of the AFIT Signal Processing lab could form the hardware of the SENSING<--->INTERPRETING and GENERATING<--->EFFECTING blocks of figure 1. Pattern Recognition would provide software for these same blocks while software for the REASONING and WORLD MODEL blocks would be provided by Artificial Intelligence. Additional sensor systems, communications, computers, software, and hardware are required to make MARRS-1 a truely autonomous robot. However, the required resources do exist within the AFIT Electrical Engineering

Department. It may be argued that it is impossible to build a truly autonomous robot since all machines created by mankind have limitations. Yet, if allowed only to use existing technology, a mobile robot with tremendous capabilities could still be realized. What is needed is a commitment from the highest level possible to solve the autonomous robot problem. The MARRS-1 robot is only a start towards that solution.

Intradepartment and interdepartment cooperation to solve problems would benefit all involved. Dr. Hans Moravec, creator of the Stanford Cart and the Carnegie-Mellon University (CMU) Rover, argues that advances in mobile robotics would bring more robust and general AI tools (23:1), (24:882). Would that not be true for all disciplines that cooperated?

Conclusion

Robots need sensors along with their mechanical devices and computational elements to be effective. This places a new perspective on the responsibilities of mobile robot designers and programmers in the way that they attack and solve their problems. These are system integration problems with demanding requirements. Overlooking an item that seems trivial may have long range negative consequences. To be sure, all that is important in mobile robotics has not been identified in this thesis.

Bibliography

1. Taylor, Captain Roslyn J. An Android Research and Development Program, MS Thesis AFIT/GE/EE/83M-3. School of Engineering, Air Force Institute of Technology (AU), Wright-Patterson AFB OH, March 1983 (AD-A127 359).

2. Owen, 1Lt Randall J. III. Environmental Mapping by a Hero-1 Robot Using Sonar and a Laser Barcode Scanner, MS thesis, AFIT/GE/EE/83D-52. School of Engineering, Air Force Institute of Technology (AU), Wright-Patterson AFB OH, December 1983 (AD-A138 348).

3. Craig, John. "Digital Speed Control of DC Motors," in the Beginning, New Jersey: Hayden Book Co, 1983.

4. Iijima, J, and others; "Elementary Functions of a Self-contained Robot 'Yamabico 3.1'," Proceedings of the 11th International Symposium on Industrial Robots; 7, 8, and 9 Oct, 1981.

5. Starns, Thomas W. "Design Philosophy Behind Motorola's MC68000 Part 1," Byte, 8-4: 70-91 (April 1983).

91

6. Starns, Thomas W. "Design Philosophy Behind Motorola's MC68000 Part 2," Byte, 8-5: 342-367 (May 1983).

7. Starns, Thomas W. "Design Philosophy Behind Motorola's MC68000 Part 3," Byte, 8-6: 339-349 (June 1983).

8. ICAM Robotics Application Guide (RAG), Air Force Wright Aeronautical Laboratories, Materials Laboratory, AFWAL TR-80-4042-VOL-2, Wright-Patterson AFB, OH, 1980 (AD-B050 811).

9. Robillard, Mark J. Microprocessor Based Robotics, Indiana. Howard W. Sams & Co., Inc., 1983.

10. Lemaire, B., and others. "A Self Adapting Low Cost Sonair for Use on Mobile Robots," Sensor Review, Oct, 1981.

11. McKean, Kevin "Computers that See," Discovery, ?:72-73, September 1984.

12. Jarvis, R. A. "A Perspective on Range Finding Techniques for Computer Vision," IEEE Transactions on Pattern Analysis and Machine Intelligence, 5:122-139 (March 1983).

13. Keller, Erik L. "Clever Robots Set to Enter Industry En Masse," Electronics, 56: 116-129 (November 17, 1983).

14. Iverson, Wesley R. "Low Cost Eyes Judge Distance," Electronics, 56: 54,56 (November 17, 1983).

15. Polaroid, Ultrasonic Ranging System, Undated.

16. Jarvis R. A. "A Laser Time-of-Flight Range Scanner for Robotic Vision," IEEE Transactions on Pattern Analysis and Machine Intelligence, 5: 505-512 (September 1983).

17. Crowley, James L. A Computational Paradigm for Three Dimensional Scene Analysis, The Robotics Institute, Carnegie-Mellon University, Pittsburgh, PA, April 1884.

18. Crowley, James L. Navigation for an Intelligent Mobile Robot, The Robotics Institute, Carnegie-Mellon University, Pittsburgh, PA, March 1984.

19. Webster's Seventh New Collegiate Dictionary, Springfield, Mass: G. & C. Merriam Co., 1972.

20. Fujiwara, N. and Tsumura, T. "An Experimental System For Processing Movement Information of Vehicle," 28th IEEE Vehicular Technology Conference Proceedings, Denver, CO, 163-168, March 1978.

21. MICROWARE C COMPILER USER'S GUIDE, Radio Shack, a Division of Tandy Corporation, 1983.

22. Brown, David R.; Fowler, Darrell V.; et al; R&D Plan for Army Applications of AI/Robotics; ETL-0296, U.S. Army Engineer Topographic Laboratories, Fort Belvoir, Virginia, May 1982, (AD-A118 297).

23. Elfes, Alberto; Talukdar, Sarosh N. A Distributed Control System for the CMU Rover, The Robotics Institute, Carnegie-Mellon University, Pittsburgh, PA, January 1983.

24. Moravec, Hans P. "The Stanford Cart and the CMU Rover," Proceedings of the IEEE, 71: 872-884 (July 1983).

Vita

First Lieutenant Thomas E. Clifford was born [redacted] in [redacted] where, in 1968, he graduated from [redacted] and enlistmented in the Utah Air National Guard.

He enlisted in the Regular Air Force in 1973 and became an honor graduate of the B-52 Bomb-Navigation maintenance school at Lowry AFB, Colorado. He was assigned to the 92 Bomb Wing at Fairchild AFB, Washington in 1974 and was President of the Wing Enlisted Advisory Council in 1976. In 1977 he was assigned as an IBM computer operator at the 1035th Technical Operations Group, Patrick AFB, Florida.

He received an Associate degree from the Community College of the Air Force in 1978, and a Bachelor of Science degree in Electrical Engineering from Texas Tech University in 1980 under the Airman Education and Commissioning Program. He was commissioned a Reserve Second Lieutenant in December of 1980 from Officer Training School and assigned to the 3246th Test Wing, Eglin AFB, Florida as an Electronic Warfare Test Engineer.

Lieutenant Clifford is the 1982 recipient of the Air Force Systems Command's General James Ferguson Engineering Award. He entered the Air Force Institute of Technology in May 1983 and was selected for Regular Commission status in June 1984.

Lieutenant Clifford is married to the former [redacted] of [redacted] They have five children: [redacted].

Address: [redacted]

Vita

CAPTAIN HUBERT G. SCHNEIDER III

Captain Schneider was born [redacted] Upon graduation in 1976 from [redacted] in [redacted] he matriculated as a cadet at the Virginia Military Institute, where in 1980 he completed the requirements for a B.S. in Electrical Engineering and was commissioned a Reserve Second Lieutenant of the United States Air Force.

He was then assigned as Chief, Minuteman Survival Power at the Ballistic Missile Office at Norton AFB, California where he managed the production and deployment of a new generation of high energy lithium batteries as part of the Minuteman Extended Survival Power Program.

In 1983 he entered the Masters program at the Air Force Institute of Technology, Wright Patterson AFB, Ohio and received a Regular Commission while attending the school.

He is married to [redacted] and they have one daughter, [redacted]

Address: [redacted]

```
;*********************************************
;*                                           *
;*            APPENDIX  A                    *
;*                                           *
;*********************************************
;            FILE:   NAVROM.A  MINUS NAVDEF.A
;      WHICH IS LISTED IN APPENDIX D
;
;            NOTE:  PORTIONS OF THIS LISTING DO NOT HAVE COMMENTS.
;      MOTOROLA ENGINEERING NOTE 100 IS A COMPLETE LISTING FOR MIKBUG.
;      AMERICAN MICROSYSTEMS  AMI 6800 PROTOTYPING BOARD MANUAL CONTAINS
;      A COMPLETE SOURCE CODE LISTING FOR THE PROTO PORTION OF THE CODE.
;
;
;      NAV COMPUTER ROM  AS OF MONDAY 15 OCTOBER 1984  2:30 PM
;
;*****************************************************************
0000        get navhead.a
;
;                    VERSION 1.0 OF MARRSBUG
;
;             LT TOM CLIFFORD, CAPT BERT SCHNEIDER
;
;     MARRSBUG IS A ROM BASED OPERATING SYSTEM FOR THE AFIT
;
;     MOBILE AUTONOMOUS ROBOT RESEARCH SYSTEM 1 (MARRS-1).
;
;     THE ROM CONTAINS A SERIAL VERSION OF THE MOTOROLA MIKBUG
;
;     OPERATING SYSTEM AND A HIGHLY MODIFIED VERSION OF AMERICAN
;
;     MICROSYSTEMS PROTO OPERATING SYSTEM.  SYSTEM INITIALIZATION
;
;     ON POWER UP RESET OR EXTERNAL RESET CONFIGURES ALL INPUT/OUTPUT
;
;     DEVICES, PERFORMS A ROM TO RAM OVERLAY AS APPLICABLE, SIZES AND
;
;     TESTS RAM MEMORY, AND JUMPS TO THE PROTO PORTION OF THE OPERATING
;
;     SYSTEM.
;
;*****************************************************************
0000        get navdef.a          ;NAV COMPUTER EQUATES AND SYS RAM USAGE
;
;     NAVDEF.A  DEFINES THE INPUT/OUTPUT AND SYSTEM RAM USAGE FOR
;     THE MARRS-1 NAVIGATION COMPUTER
;     SEE APPENDIX D FOR A COMPLETE LISTING OF NAVDEF.A
;*****************************************************************
```

```
0000                          get msbug.a          ;SERIAL VERSION OF MIKBUG
                        ;
                        ;     MSBUG VERSION 1.0      22 SEPTEMBER 1984 -- LT TOM CLIFFORD
                        ;     SERIAL VERSION OF MIKBUG  (SEE MOTOROLA ENGINEERING NOTE 100)
                        ;
                        ;
                        ;
E000                          ORG 0E000H           ;FOR MIKBUG COMPATABILITY
E000  FE A0 00          MIO   LDX MIOV
E003  6E 00                   JMP 00,X
E005  FE A0 06          MPOWDWN LDX MNIO
E008  6E 00                   JMP 00,X
E00A  01                MLOAD NOP
E00B  01                      NOP
E00C  01                      NOP
E00D  01                      NOP
E00E  01                      NOP
E00F  01                      NOP
E010  01                      NOP
E011  01                      NOP
E012  01                      NOP
E013  8D 63             MLOAD3 BSR MINCH
E015  81 53                   CMPA #53H
E017  26 FA                   BNE MLOAD3
E019  8D 5D                   BSR MINCH
E01B  81 39                   CMPA #39H
E01D  27 25                   BEQ MC1
E01F  81 31                   CMPA #31H
E021  26 F0                   BNE MLOAD3
E023  7F A0 0A                CLR MCKSM
E026  8D 2D                   BSR MBYTE
E028  80 02                   SUBA #02
E02A  B7 A0 0B                STAA MBYTECT
E02D  8D 18                   BSR MBADDR
E02F  8D 24             MLOAD11 BSR MBYTE
E031  7A A0 0B                DEC MBYTECT
E034  27 05                   BEQ MLOAD15
E036  A7 00                   STAA 00,X
E038  08                      INX
E039  20 F4                   BRA MLOAD11
E03B  7C A0 0A          MLOAD15 INC MCKSM
E03E  27 D3                   BEQ MLOAD3
E040  86 3F             MLOAD19 LDAA #3FH
E042  8D 31                   BSR MOUTCH
E044  7E E0 E3          MC1 JMP MCONTRL
E047  8D 0C             MBADDR BSR MBYTE
E049  B7 A0 0C                STAA MXHI
E04C  8D 07                   BSR MBYTE
E04E  B7 A0 0D                STAA MXLOW
E051  FE A0 0C                LDX MXHI
E054  39                      RTS
```

```
E055  8D 53        MBYTE   BSR MINHEX
E057  48                   ASLA
E058  48                   ASLA
E059  48                   ASLA
E05A  48                   ASLA
E05B  16                   TAB
E05C  8D 4C                BSR MINHEX
E05E  1B                   ABA
E05F  16                   TAB
E060  FB A0 0A             ADDB MCKSM
E063  F7 A0 0A             STAB MCKSM
E066  39                   RTS
E067  44           MOUTHL  LSRA
E068  44                   LSRA
E069  44                   LSRA
E06A  44                   LSRA
E06B  84 0F        MOUTHR  ANDA #0FH
E06D  8B 30                ADDA #30H
E06F  81 39                CMPA #39H
E071  23 02                BLS MOUTCH
E073  8B 07                ADDA #07
E075  7E E1 D1     MOUTCH  JMP MOUTEEE
E078  7E E1 AC     MINCH   JMP MINEEE
E07B  8D F8        MPDATA2 BSR MOUTCH
E07D  08                   INX
E07E  A6 00        MPDATA1 LDAA 00,X
E080  81 04                CMPA #04
E082  26 F7                BNE MPDATA2
E084  39                   RTS
E085  8D C0        MCHANGE BSR MBADDR
E087  CE E1 9D     MCHAS1  LDX #MMCL
E08A  8D F2                BSR MPDATA1
E08C  CE A0 0C             LDX #MXHI
E08F  8D 37                BSR MOUT4HS
E091  FE A0 0C             LDX MXHI
E094  8D 34                BSR MOUT2HS
E096  FF A0 0C             STX MXHI
E099  8D DD                BSR MINCH
E09B  81 20                CMPA #20H
E09D  26 E8                BNE MCHAS1
E09F  8D B4                BSR MBYTE
E0A1  09                   DEX
E0A2  A7 00                STAA 00,X
E0A4  A1 00                CMPA 00,X
E0A6  27 DF                BEQ MCHAS1
E0A8  20 96                BRA MLOAD19
E0AA  8D CC        MINHEX  BSR MINCH
E0AC  80 30                SUBA #30H
E0AE  2B 94                BMI MC1
E0B0  81 09                CMPA #09
E0B2  2F 0A                BLE MINIHC
E0B4  81 11                CMPA #11H
```

```
E0B6  2B 8C                 BMI MC1
E0B8  81 16                 CMPA #16H
E0BA  2E 88                 BGT MC1
E0BC  80 07                 SUBA #07
E0BE  39            MIN1HC  RTS
E0BF  A6 00         MOUT2H  LDAA 00,X
E0C1  8D F[illegible]       BSR MOUTHL
E0C3  A6 00                 LDAA 00,X
E0C5  08                    INX
E0C6  20 A3                 BRA MOUTHR
E0C8  8D F5         MOUT4HS BSR MOUT2H
E0CA  8D F3         MOUT2HS BSR MOUT2H
E0CC  86 20         MOUTS   LDAA #20H
E0CE  20 A5         MOUTS2  BRA MOUTCH
E0D0  CE BF F5              LDX #MACIAI
E0D3  8E 00 00              LDS #MACIA
E0D6  AF 00                 STS 00,X
E0D8  8E E0 00              LDS #MIO
E0DB  AF 03                 STS 03,X
E0DD  8E E1 13              LDS #MSFE
E0E0  AF 06                 STS 06,X
E0E2  01                    NOP
E0E3  8E E0 05      MCONTRL LDS #MPOWDWN
E0E6  AF 09                 STS 09,X
E0E8  8E A0 42              LDS #MSTACK
E0EB  BF A0 08              STS MSP
E0EE  CE E1 9C              LDX #MMCLOFF
E0F1  8D 88                 BSR MPDATA1
E0F3  8D 83                 BSR MINCH
E0F5  16                    TAB
E0F6  8D D4                 BSR MOUTS
E0F8  C1 4C                 CMPB #4CH
E0FA  26 03                 BNE MCONTL2
E0FC  7E E0 0A              JMP MLOAD
E0FF  C1 4D         MCONTL2 CMPB #4DH
E101  27 82                 BEQ MCHANGE
E103  C1 52                 CMPB #52H
E105  27 18                 BEQ MPRINT
E107  C1 50                 CMPB #50H
E109  27 32                 BEQ MPUNCH
E10B  C1 47                 CMPB #47H
E10D  26 D4                 BNE MCONTRL
E10F  BE A0 08              LDS MSP
E112  3B                    RTI
E113  BF A0 08      MSFE    STS MSP
E116  30                    TSX
E117  6D 06                 TST 06,X
E119  26 02                 BNE MSFE1
E11B  6A 05                 DEC 05,X
E11D  6A 06         MSFE1   DEC 06,X
E11F  FE A0 08      MPRINT  LDX MSP
E122  08                    INX
```

```
E123  8D A5                 BSR MOUT2HS
E125  8D A3                 BSR MOUT2HS
E127  8D A1                 BSR MOUT2HS
E129  8D 9D                 BSR MOUT4HS
E12B  8D 9B                 BSR MOUT4HS
E12D  CE A0 08              LDX #MSP
E130  8D 96                 BSR MOUT4HS
E132  20 AF         MC2 BRA MCONTRL
E134  0D            MMTAPE1 FCB 0DH
E135  0A                    FCB 0AH
E136  C0                    FCB 00
E137  00                    FCB 00
E138  00                    FCB 00
E139  00                    FCB 00
E13A  53                    FCB 53H
E13B  31                    FCB 31H
E13C  04                    FCB 04
E13D  86 12         MPUNCH  LDAA #12H
E13F  BD E0 75              JSR MOUTCH
E142  FE A0 02              LDX MBEGA
E145  FF A0 0F              STX MTW
E148  B6 A0 05      MPUN11  LDAA MENDA1
E14B  B0 A0 10              SUBA MTW1
E14E  F6 A0 04              LDAB MENDA
E151  F2 A0 0F              SBCB MTW
E154  26 04                 BNE MPUN22
E156  81 10                 CMPA #10H
E158  25 02                 BCS MPUN23
E15A  86 0F         MPUN22  LDAA #0FH
E15C  8B 04         MPUN23  ADDA #04
E15E  B7 A0 11              STAA MMCONT
E161  80 03                 SUBA #03
E163  B7 A0 0E              STAA MTEMP
E166  CE E1 34              LDX #MMTAPE1
E169  BD E0 7E              JSR MPDATA1
E16C  5F                    CLRB
E16D  CE A0 11              LDX #MMCONT
E170  8D 25                 BSR PUNT2
E172  CE A0 0F              LDX #MTW
E175  8D 20                 BSR PUNT2
E177  8D 1E                 BSR PUNT2
E179  FE A0 0F              LDX MTW
E17C  8D 19         MPUN32  BSR PUNT2
E17E  7A A0 0E              DEC MTEMP
E181  26 F9                 BNE MPUN32
E183  FF A0 0F              STX MTW
E186  53                    COMB
E187  37                    PSHB
E188  30                    TSX
E189  8D 0C                 BSR PUNT2
E18B  33                    PULB
E18C  FE A0 0F              LDX MTW
```

```
E18F  09                 DEX
E190  BC A0 04           CPX MENDA
E193  26 B3              BNE MPUN11
E195  20 9B              BRA MC2
E197  EB 00      PUNT2   ADDB 00,X
E199  7E E0 BF           JMP MOUT2H
E19C  13         MMCLOFF FCB 13H
E19D  0D         MMCL    FCB 0DH
E19E  0A                 FCB 0AH
E19F  14                 FCB 14H
E1A0  00                 FCB 00
E1A1  00                 FCB 00
E1A2  00                 FCB 00
E1A3  2A                 FCB 2AH
E1A4  04                 FCB 04
E1A5  FF A0 12   MSAV    STX MXTEMP
E1A8  FE BF F5           LDX MACIAI
E1AB  39                 RTS
E1AC  37         MINEEE  PSHB          ;INPUT WITH ECHO THRU ACIA WITH NO PARITY
E1AD  8D F6              BSR MSAV
E1AF  EE 00              LDX 00,X
E1B1  A6 00      MINOEK0 LDAA 00,X
E1B3  47                 ASRA
E1B4  24 FB              BCC MINOEK0
E1B6  A6 01              LDAA 01,X
E1B8  84 7F              ANDA 07FH
E1BA  36         MINOEK1 PSHA
E1BB  A6 00      MINOEK2 LDAA 00,X
E1BD  85 02              BITA 002
E1BF  27 FA              BEQ MINOEK2
E1C1  32                 PULA
E1C2  A7 01              STAA 01,X
E1C4  20 24              BRA MIOS
E1C6  01                 NOP
E1C7  01                 NOP
E1C8  01                 NOP
E1C9  01                 NOP
E1CA  01                 NOP
E1CB  01                 NOP
E1CC  01                 NOP
E1CD  01                 NOP
E1CE  01                 NOP
E1CF  01                 NOP
E1D0  01                 NOP
E1D1  37         MOUTEEE PSHB
E1D2  8D D1              BSR MSAV
E1D4  EE 00              LDX 00,X
E1D6  20 E2              BRA MINOEK1
E1D8  01                 NOP
E1D9  01                 NOP
E1DA  01                 NOP
E1DB  01                 NOP
```

```
E1DC  01                NOP
E1DD  01                NOP
E1DE  01                NOP
E1DF  01                NOP
E1E0  01                NOP
E1E1  01                NOP
E1E2  01                NOP
E1E3  01                NOP
E1E4  01                NOP
E1E5  01                NOP
E1E6  01                NOP
E1E7  01                NOP
E1E8  01                NOP
E1E9  01                NOP
E1EA  FE A0 12    MIOS  LDX MXTEMP
E1ED  33                PULB
E1EE  39                RTS
                  ;
                  ;
                  ;     END OF MSBUG  (SERIAL VERSION OF MIKBUG (SEE MOTOROLA
                  ;     ENGINEERING NOTE 100) )
                  ;
                  ;
                  ;*****************************************************************
E1EF                      get nbug3.a          ;HIGHLY MODIFIED VERSION OF PROTO
                  ;
                  ;                    NBUG3.A        (NEW BUG)
                  ;
                  ;     PROTO OPERATING SYSTEM VERSION 3.0
                  ;     (HIGHLY MODIFIED FOR MOS/TEC BUILT 6802/6808 COMPUTERS)
                  ;
                  ;     26 SEPTEMBER 1984 -- LT TOM CLIFFORD, CAPT BERT SCHNEIDER
                  ;     SEE AMI 6800 PROTOTYPING BOARD MANUAL FOR COMPLETE
                  ;                         SOURCE CODE LISTING
E1EF  8E BE 00    START LDS #USRSTAK
E1F2  BF BF F1          STS SREG
E1F5  7E E1 FD          JMP STARTI
E1F8  7E E2 91    BREAK JMP BREAK1
E1FB  C0 00       ACIAA FDB IO+ACIAT
E1FD  36          START1 PSHA
E1FE  07                TPA
E1FF  B7 BF EA          STAA CREG
E202  32                PULA
E203  B7 BF EC          STAA AREG
E206  F7 BF EB          STAB BREG
E209  FF BF ED          STX XREG
E20C  BF BF F1          STS SREG
E20F  8E BE 7F          LDS #BOS
E212  CE E1 F8          LDX #BREAK
E215  FF BF FE          STX NMIVEC+1
E218  01                NOP            ;THESE THREE LINES MAY BE REPLACED WITH:
E219  01                NOP            ;       STX IRQVEC+1
```

```
E21A  01                 NOP          ;THE THREE NOPS ARE USED TO KEEP A STANDARD
                                      ;CONFIGURATION OF THE ROM SUBROUTINE ADDRESSES
                                      ;FROM ONE COMPUTER TO ANOTHER RUNNING NEW BUG.
E21B  86 7E              LDAA #7EH
E21D  B7 BF F7           STAA IRQVEC
E220  B7 BF FA           STAA SWIVEC
E223  B7 BF FD           STAA NMIVEC
E226  CE E2 A8           LDX #SWI30
E229  FF BF F3           STX USWI
E22C  CE E2 95           LDX #SWIHAN
E22F  FF BF FB           STX SWIVEC+1
E232  CE E1 FB           LDX #ACIAA
E235  FF BF F5           STX ACIAI
E238  86 03              LDAA #03
E23A  B7 C0 00           STAA IO+ACIAT
E23D  86 15              LDAA #15H
E23F  B7 C0 00           STAA IO+ACIAT
E242  BD E5 2A   MONENT  JSR PCRLF
E245  8E BE 7F   MONITR  LDS #BOS
E248  B6 C0 01           LDAA IO+ACIAT+A.RX
E24B  86 3E              LDAA #3EH
E24D  BD E5 0B           JSR OUTCH
E250  CE BF 80           LDX #BUF
E253  FF BF D0           STX BUFPTR
E256  0D                 SEC
E257  79 BF E8           ROL ECHO
E25A  8C BF C7   RT10    CPX #BUFEND
E25D  26 02              BNE RT20
E25F  20 26              BRA ABORT
E261  BD E6 11   RT20    JSR WAITTY
E264  A7 00              STAA 00,X
E266  08                 INX
E267  81 0D      RT90    CMPA #0DH
E269  26 EF              BNE RT10
E26B  BD E5 AC           JSR PEXISTS
E26E  08                 INX
E26F  FF BF D0           STX BUFPTR
E272  CE E8 82           LDX #CTABLE
E275  A1 00      DLOOP   CMPA 00,X
E277  26 04              BNE DL10
E279  EE 01              LDX 01,X
E27B  6E 00              JMP 00,X
E27D  08         DL10    INX
E27E  08                 INX
E27F  08                 INX
E280  8C E8 A3           CPX #QBADR
E283  26 F0              BNE DLOOP
E285  20 00              BRA ABORT
E287  CE E8 B9   ABORT   LDX #QQUES
E28A  8E BE 7F   MSGMON  LDS #BOS
E28D  3F                 SWI
E28E  12                 FCB 12H
```

```
E28F  20 B1                 BRA MONENT
E291  86 80          BREAK1 LDAA #80H
E293  20 1A                 BRA SWI40
E295  30             SWIHAN TSX
E296  EE 05                 LDX 05,X
E298  A6 00                 LDAA 00,X
E29A  2B 0C                 BMI SWI30
E29C  80 18                 SUBA #18H
E29E  2A 03                 BPL SWI20
E2A0  7E E6 5A              JMP RSRSR
E2A3  FE BF F3       SWI20  LDX USWI
E2A6  6E 00                 JMP 00,X
E2A8  30             SWI30  TSX
E2A9  6C 06                 INC 06,X
E2AB  26 02                 BNE SWI40
E2AD  6C 05                 INC 05,X
E2AF  CE BF EA       SWI40  LDX #CREG
E2B2  33             SWI50  PULB
E2B3  E7 00                 STAB 00,X
E2B5  08                    INX
E2B6  8C BF F1              CPX #SREG
E2B9  26 F7                 BNE SWI50
E2BB  AF 00                 STS 00,X
E2BD  81 81                 CMPA #81H
E2BF  26 04                 BNE PREGS
E2C1  8D 07                 BSR PR1
E2C3  20 2C                 BRA RESTAK
E2C5  8D 03          PREGS  BSR PR1
E2C7  7E E2 45              JMP MONITR
E2CA  BD E5 2A       PR1    JSR PCRLF          ;PRINT CRLF
E2CD  CE E8 EB              LDX #QREGNAM       ;POINT TO PROMPT STRING
E2D0  3F                    SWI
E2D1  12                    FCB 12H            ;AND PRINT IT
E2D2  BD E5 2A              JSR PCRLF          ;PRINT CRLF
E2D5  CE BF EA              LDX #CREG          ;POINT TO TEMPORARY REGISTERS
E2D8  C6 03                 LDAB #03           ;PRINT 3 SINGLE BYTE REGISTERS
E2DA  3F             PR10   SWI
E2DB  0F                    FCB 0FH
E2DC  BD E5 A7              JSR PSPACE         ;WITH A SPACE BETWEEN EACH PAIR
E2DF  5A                    DECB               ;OF HEX CHARACTERS
E2E0  2E F8                 BGT PR10
E2E2  C6 03                 LDAB #03           ;NOW PRINT 3 TWO BYTE REGISTERS
E2E4  BD E5 A5       PR20   JSR P4HEXS         ;WITH A SPACE BETWEEN FOUR
E2E7  BD E5 A7              JSR PSPACE         ;HEX CHARACTERS
E2EA  5A                    DECB
E2EB  2E F7                 BGT PR20
E2ED  BD E5 2A              JSR PCRLF
E2F0  39                    RTS
E2F1  BE BF F1       RESTAK LDS SREG
E2F4  CE BF F0              LDX #PREG+1
E2F7  A6 00          RUS10  LDAA 00,X
E2F9  36                    PSHA
```

```
E2FA  09                 DEX
E2FB  8C BF E9           CPX #TCOUNT
E2FE  26 F7              BNE RUS10
E300  3B                 RTI
E301  B6 BF D4   CHEKSM  LDAA CKSUM
E304  36                 PSHA
E305  BD E4 CC           JSR HEX2D
E308  33                 PULB
E309  53                 COMB
E30A  11                 CBA
E30B  26 01              BNE CS1
E30D  39                 RTS
E30E  30         CS1     TSX
E30F  09                 DEX
E310  3F                 SWI
E311  0F                 FCB 0FH
E312  BD E5 A7           JSR PSPACE
E315  CE E8 BE           LDX #ACKSMER
E318  39                 RTS
E319  36         READACI PSHA                 ;LILBUG READ PORT WITHOUT WAIT
E31A  B6 C0 01           LDAA IO+ACIAT+A.RX
E31D  84 7F              ANDA #7FH            ;CLEAR PARITY BIT
E31F  81 17              CMPA #17H            ;IS IT CONTROL W ?
E321  26 02              BNE ISCTRLX          ;IF SO WAIT FOR FURTHER INPUT
E323  3F                 SWI                  ;BEFORE CONTINUING
E324  14                 FCB 14H
E325  81 18      ISCTRLX CMPA #18H            ;IS IT CONTROL X ?
E327  32                 PULA                 ;IF YES THEN CC IS SET
E328  39         RET39   RTS
E329  84 0F      CONV4   ANDA #0FH            ;LILBUG CONVERT RIGHT 4 BITS AND
E32B  8B 90              ADDA #90H            ;PRINT ROUTINE
E32D  19                 DAA
E32E  89 40              ADCA #40H
E330  19                 DAA
E331  3F                 SWI
E332  11                 FCB 11H
E333  39                 RTS
E334  08         ROZR2P2     INX          ;Advance compare TO pointer
E335  FF BF D9               STX TEMP2    ;Save compare TO pointer
E338  FE BF D7   CPRMEN      LDX TEMP1    ;Fetch compare pointer
E33B  A6 00                  LDAA 0,X     ;Fetch compare data
E33D  08                     INX          ;Advance compare pointer
E33E  FF BF D7               STX TEMP1    ;Store compare pointer
E341  FE BF D9               LDX TEMP2    ;Fetch compare TO pointer
E344  A1 00                  CMPA 0,X     ;Compare A to indexed data
E346  26 03                  BNE CPRET    ;If not equal, return
E348  5A                     DECB         ;Decremnt byte counter
E349  26 E9                  BNE ROZR2P2  ;Counter <>0, continue comparing
E34B  39         CPRET   RTS              ;Return with flags conditioned
E34C  BD E3 F0   DISMEM  JSR GETRNG       ;DISPLAY MEMORY ROUTINE STARTS HERE
E34F  8D 03              BSR DISMEM1
E351  7E E2 42           JMP MONENT
```

```
E354  CE BF CC     DISMEM1 LDX #ADDL        ;POINT TO THE 'FROM' ADDRESS
E357  A6 01                LDAA 01,X        ;GET LOW ORDER PART OF ADDRESS
E359  84 F0                ANDA #0F0H       ;MASK LOW ORDER 4 BITS
E35B  A7 01                STAA 01,X        ;RETURN NEW LOW ORDER PART OF ADDRESS
E35D  FE BF CE             LDX ADDH         ;GET THE 'TO' ADDRESS
E360  09                   DEX              ;MAKE IT WHAT THE USER SAID IT WAS TO BE
E361  3F                   SWI              ;
E362  02                   FCB 02H          ;
E363  CA 0F                ORAB #0FH        ;SET LOW ORDER 4 BITS
E365  3F                   SWI              ;
E366  03                   FCB 03H          ;
E367  FF BF CE             STX ADDH         ;RESTORE NEW 'TO' ADDRESS
E36A  BD E5 2A     BYTENUM JSR PCRLF        ;PRINT BYTE NUMBER GUIDE LINE BY FIRST PRINTING CRLF
E36D  BD E5 2A             JSR PCRLF        ;TWICE
E370  CE E8 E4             LDX #Q6SPACE     ;PRINT 6 LEADING SPACES
E373  3F                   SWI
E374  12                   FCB 12H
E375  4F                   CLRA
E376  36           BYTENM1 PSHA             ;CONVERT RIGHT 4 BITS AND PRINT AS ASCII
E377  BD E3 29             JSR CONV4        ;UPPER CASE CHARACTER
E37A  BD E5 A7             JSR PSPACE       ;PRINT TWO
E37D  BD E5 A7             JSR PSPACE       ;SPACES
E380  32                   PULA             ;GET COUNTER
E381  4C                   INCA             ;HAVE WE PRINTED
E382  81 10                CMPA #10H        ;HEX NUMBERS 0 THRU F?
E384  26 F0                BNE BYTENM1      ;KEEP PRINTING THEM IF NOT FINISHED
E386  8D 91        OUTLOOP BSR READACI      ;CHECK FOR PRINT END OR WAIT FROM USER
E388  27 57                BEQ ENDDM        ;END PRINT IF CONTROL X KEY WAS HIT
E38A  BD E5 2A             JSR PCRLF        ;ELSE CONTINUE PRINT WITH CRLF
E38D  CE BF CC             LDX #ADDL        ;GET ADDRESS OF DATA TO BE PRINTED
E390  BD E5 A5             JSR P4HEXS       ;PRINT ADDRESS AS 4 HEX WITH A SPACE
E393  FE BF CC             LDX ADDL         ;POINT TO THE DATA
E396  C6 10                LDAB #10H        ;SET UP A COUNTER FOR 16 BYTES
E398  3F           INLOOP1 SWI              ;PRINT BYTE AS TWO HEX AND POINT TO NEXT BYTE
E399  0F                   FCB 0FH
E39A  BD E5 A7             JSR PSPACE       ;PRINT A SPACE
E39D  5A                   DECB             ;ONE LESS BYTE TO PRINT
E39E  26 F8                BNE INLOOP1      ;PRINT NEXT BYTE IF NOT DONE
E3A0  BD E5 A7             JSR PSPACE       ;PRINT ANOTHER SPACE
E3A3  C6 10                LDAB #10H        ;NOW PRINT THE 16 BYTES AS ASCII IF POSSIBLE
E3A5  FE BF CC             LDX ADDL         ;POINT TO THE FIRST BYTE
E3A8  A6 00        INLOOP2 LDAA 00,X        ;GET THE BYTE
E3AA  84 7F                ANDA #7FH        ;STRIP OFF EIGHTH BIT
E3AC  81 20                CMPA #20H        ;IF BYTE IS LESS THAN ASCII SPACE
E3AE  2D 04                BLT PERIOD       ;PRINT A PERIOD
E3B0  81 61                CMPA #61H        ;ELSE CHECK TO SEE IF IT IS A PRINTABLE CHARACTER
E3B2  2D 02                BLT PRNTASC
E3B4  86 2E        PERIOD  LDAA #2EH        ;NOT PRINTABLE SO PRINT A PERIOD
E3B6  3F           PRNTASC SWI              ;PRINT THE CHARACTER OR A PERIOD
E3B7  11                   FCB 11H
E3B8  08                   INX              ;POINT TO NEXT BYTE
E3B9  5A                   DECB             ;ONE LESS TO PRINT
```

```
E38A  26 EC                BNE INLOOP2     ;GO PRINT THE REST OF THE 16 BYTES
E38C  09                   DEX             ;POINT TO THE LAST BYTE PRINTED
E38D  FF BF CC             STX ADDL        ;SAVE THE ADDRESS
E3C0  CE BF CC             LDX #ADDL       ;GET A POINTER TO THE LAST BYTE PRINTED
E3C3  FF BF D7             STX TEMP1       ;SAVE THE POINTER FOR COMPARISON
E3C6  CE BF CE             LDX #ADDH       ;GET A POINTER TO THE LAST BYTE TO BE PRINTED
E3C9  FF BF D9             STX TEMP2       ;SAVE THE POINTER FOR COMPARISON
E3CC  C6 02                LDAB #02        ;THE POINTERS ARE 2 BYTES EACH
E3CE  BD E3 38             JSR CPRMEM      ;COMPARE ADDRESSES
E3D1  22 0E                BHI ENDOM       ;BRANCH IF FINISHED WITH MEMORY PRINT
E3D3  FE BF CC             LDX ADDL        ;ELSE GET THE ADDRESS OF LAST BYTE PRINTED
E3D6  08                   INX             ;AND POINT TO NEXT BYTE TO BE PRINTED
E3D7  FF BF CC             STX ADDL        ;SAVE THE ADDRESS
E3DA  7D BF CD             TST ADDL+1      ;IF WE HAVE PRINTED A BLOCK OF DATA
E3DD  26 A7                BNE OUTLOOP     ;THEN GO PRINT THE BYTE NUMBER GUIDE LINE AND 16 BYTES
E3DF  20 89                BRA BYTENUM     ;ELSE GO PRINT NEXT 16 BYTES
E3E1  39          ENDOM    RTS             ;RETURN TO CALLER
E3E2  8D 03       EOF      BSR EOF1
E3E4  7E E2 42             JMP MONENT
E3E7  CE E8 D0    EOF1     LDX #QTPEOF
E3EA  3F                   SWI
E3EB  12                   FCB 12H
E3EC  BD E5 2A             JSR PCRLF
E3EF  39                   RTS
E3F0  BD E4 E6    GETRNG   JSR NXTADR
E3F3  FE BF CA             LDX ADR
E3F6  FF BF CC             STX ADDL
E3F9  FF BF CE             STX ADDH
E3FC  BD E4 E6             JSR NXTADR
E3FF  27 06                BEQ GETRG3
E401  FE BF CA    GETRG1   LDX ADR
E404  FF BF CE             STX ADDH
E407  CE BF 80    GETRG3   LDX #BUF
E40A  A6 4E                LDAA 4EH,X
E40C  E6 4F                LDAB 4FH,X
E40E  E0 4D                SUBB 4DH,X
E410  A2 4C                SBCA 4CH,X
E412  24 04                BCC GETRG4
E414  CE E8 AB    RNGERR   LDX #QRNGERR
E417  39                   RTS
E418  FE BF CE    GETRG4   LDX ADDH
E41B  08                   INX
E41C  FF BF CE             STX ADDH
E41F  39                   RTS
E420  BD E4 E6    GO       JSR NXTADR
E423  27 06                BEQ GO10
E425  FE BF CA             LDX ADR
E428  FF BF EF             STX PREG
E42B  7E E2 F1    GO10     JMP RESTAK
E42F  8D 03       LOAD     BSR LOAD2
E430  7E E2 8A             JMP MSGMON
E433  CE 00 00    LOAD2    LDX #XZERO
```

```
E436  FF BF C8          STX OFFSET
E439  FF BF CC          STX ADDL
E43C  09        LOOFST  DEX
E43D  FF BF CE          STX ADDH
E440  BD E4 E6          JSR NXTADR
E443  27 1E             BEQ LOAD1
E445  FE BF CA          LDX ADR
E448  FF BF C8          STX OFFSET
E44B  BD E4 E6          JSR NXTADR
E44E  27 13             BEQ LOAD1
E450  FE BF C8          LDX OFFSET
E453  FF BF CC          STX ADDL
E456  CE 00 00          LDX #XZERO
E459  FF BF C8          STX OFFSET
E45C  8D A3             BSR GETRG1
E45E  FE BF CE          LDX ADDH
E461  20 D9             BRA LOOFST
E463  01        LOAD1   NOP
E464  8D 5D     RDPRE   BSR FINDS
E466  BD E6 11          JSR WAITTY
E469  81 30             CMPA #30H
E46B  27 F7             BEQ RDPRE
E46D  B7 BF D2          STAA RECTYP
E470  7F BF D4          CLR CKSUM
E473  BD E4 CC          JSR NEX2D
E476  4A                DECA
E477  4A                DECA
E478  4A                DECA
E479  B7 BF D3          STAA COUNT
E47C  BD E4 CC          JSR NEX2D
E47F  B7 BF CA          STAA ADR
E482  BD E4 CC          JSR NEX2D
E485  BB BF C9          ADDA OFFSET+1
E488  B7 BF CB          STAA ADR+1
E48B  B6 BF CA          LDAA ADR
E48E  B9 BF C8          ADCA OFFSET
E491  B7 BF CA          STAA ADR
E494  B6 BF D2          LDAA RECTYP
E497  81 31             CMPA #31H
E499  26 14             BNE LHF4
E49B  BD E4 CC  LDR10   JSR NEX2D
E49E  FE BF CA          LDX ADR
E4A1  BD E5 C2          JSR SETOFF
E4A4  08                INX
E4A5  FF BF CA          STX ADR
E4A8  7A BF D3          DEC COUNT
E4AB  2E EE             BGT LDR10
E4AD  20 04             BRA LHF9
E4AF  81 39     LHF4    CMPA #39H
E4B1  26 0E             BNE BADTAP
E4B3  BD E3 01  LHF9    JSR CHEKSM
E4B6  B6 BF D2          LDAA RECTYP
```

```
E4B9  81 39                 CMPA #39H
E4BB  26 A6                 BNE LOAD1
E4BD  CE E8 B5              LDX #0E0F
E4C0  39                    RTS
E4C1  20 A1          BADTAP BRA RDPRE
E4C3  01             FINDS  NOP
E4C4  BD E6 11       FS10   JSR WAITTY
E4C7  81 53                 CMPA #53H
E4C9  26 F9                 BNE FS10
E4CB  39                    RTS
E4CC  BD E6 11       NEX20  JSR WAITTY
E4CF  16                    TAB
E4D0  BD E6 11              JSR WAITTY
E4D3  36                    PSHA
E4D4  37                    PSHB
E4D5  30                    TSX
E4D6  C6 02                 LDAB #02
E4D8  3F                    SWI
E4D9  15                    FCB 15H
E4DA  24 E5                 BCC BADTAP
E4DC  17                    TBA
E4DD  FB BF D4              ADDB CKSUM
E4E0  F7 BF D4              STAB CKSUM
E4E3  31                    INS
E4E4  31                    INS
E4E5  39                    RTS
E4E6  7F BF CA       NXTADR CLR ADR
E4E9  7F BF CB              CLR ADR+1
E4EC  BD E5 AC              JSR PEXISTS
E4EF  26 01                 BNE NA1
E4F1  39             NXTRTS RTS
E4F2  C6 47          NA1    LDAB #47H
E4F4  3F                    SWI
E4F5  15                    FCB 15H
E4F6  FF BF D0              STX BUFPTR
E4F9  B7 BF CA              STAA ADR
E4FC  F7 BF CB              STAB ADR+1
E4FF  A6 00                 LDAA 00,X
E501  3F                    SWI
E502  13                    FCB 13H
E503  25 01                 BCS NA3
E505  39                    RTS
E506  7E E2 87       NA3    JMP ABORT
E509  A6 00          OUTCHX LDAA 00,X
E50B  37             OUTCH  PSHB
E50C  F6 C0 00              LDAB IO+ACIAT
E50F  57                    ASRB
E510  24 0A                 BCC OC10
E512  F6 C0 01              LDAB IO+ACIAT+A.RX
E515  C1 1B                 CMPB #1BH
E517  26 03                 BNE OC10
E519  7E E2 87              JMP ABORT
```

```
E51C  3F          OC10   SWI
E51D  11                 FCB 11H
E51E  81 0D              CMPA #0DH
E520  26 06              BNE OC20
E522  86 0A              LDAA #0AH
E524  3F                 SWI
E525  11                 FCB 11H
E526  86 0D              LDAA #0DH
E5^3  33          OC20   PULB
E529  39                 RTS
E52A  86 0D       PCRLF  LDAA #0DH
E52C  20 DD              BRA OUTCH
E52E  8D 03       PUNCH  BSR PUNCH1
E530  7E E2 42           JMP MONENT
E533  BD E3 F0    PUNCH1 JSR GETRNG
E536  CE 00 06           LDX #XZERO
E539  FF BF C8           STX OFFSET
E53C  8D A8              BSR NXTADR
E53E  27 06              BEQ PHF20
E540  FE BF CA           LDX ADR
E543  FF BF C8           STX OFFSET
E546  F6 BF CF    PHF20  LDAB ADDH+1
E549  F0 BF CD           SUBB ADDL+1
E54C  B6 BF CE           LDAA ADDH
E54F  B2 BF CC           SBCA ADDL
E552  26 04              BNE PUND10
E554  C1 10              CMPB #10H
E556  23 02              BLS PUND20
E558  C6 10       PUND10 LDAB #10H
E55A  5C          PUND20 INCB
E55B  5C                 INCB
E55C  5C                 INCB
E55D  F7 BF D3           STAB COUNT
E560  CE E8 DB           LDX #QSI
E563  3F                 SWI
E564  12                 FCB 12H
E565  5F                 CLRB
E566  CE BF D3           LDX #COUNT
E569  8D 32              BSR PUNBYTE
E56B  37                 PSHB
E56C  FE BF CC           LDX ADDL
E56F  B6 BF C8           LDAA OFFSET
E572  F6 BF C9           LDAB OFFSET+1
E575  3F                 SWI
E576  08                 FCB 08
E577  FF BF CA           STX ADR
E57A  CE BF CA           LDX #ADR
E57D  33                 PULB
E57E  8D 1D              BSR PUNBYTE
E580  8D 1B              BSR PUNBYTE
E582  FE BF CC           LDX ADDL
E585  8D 16       PREC10 BSR PUNBYTE
```

```
E587  2E FC                 BGT PREC10
E589  FF BF CC              STX ADDL
E58C  CE BF D4              LDX #CKSUM
E58F  53                    COMB
E590  E7 00                 STAB 00,X
E592  8D 09                 BSR PUNBYTE
E594  FE BF CC              LDX ADDL
E597  BC BF CE              CPX ADDH
E59A  26 AA                 BNE PHF20
E59C  39                    RTS
E59D  EB 00         PUNBYTE ADDB 00,X
E59F  3F                    SWI
E5A0  0F                    FCB 0FH
E5A1  7A BF D3              DEC COUNT
E5A4  39                    RTS
E5A5  3F            P4HEXS  SWI
E5A6  10                    FCB 10H
E5A7  86 20         PSPACE  LDAA #20H
E5A9  3F                    SWI
E5AA  11                    FCB 11H
E5AB  39                    RTS
E5AC  FE BF D0      PEXISTS LDX BUFPTR
E5AF  A6 00         PXISTX  LDAA 00,X
E5B1  3F                    SWI
E5B2  13                    FCB 13H
E5B3  25 07                 BCS PX2
E5B5  81 0D                 CMPA #0DH
E5B7  27 03                 BEQ PX2
E5B9  08                    INX
E5BA  20 F3                 BRA PXISTX
E5BC  FF BF D0      PX2     STX BUFPTR
E5BF  81 0D                 CMPA #0DH
E5C1  39                    RTS
E5C2  36            SETOFF  PSHA
E5C3  B6 BF CC              LDAA ADDL
E5C6  F6 BF CD              LDAB ADDL+1
E5C9  3F                    SWI
E5CA  0B                    FCB 0BH
E5CB  22 0A                 BHI SETOUT
E5CD  B6 BF CE              LDAA ADDH
E5D0  F6 BF CF              LDAB ADDH+1
E5D3  3F                    SWI
E5D4  0B                    FCB 0BH
E5D5  24 07                 BCC SETPUL
E5D7  32            SETOUT  PULA
E5D8  86 FF                 LDAA #0FFH
E5DA  3F                    SWI
E5DB  11                    FCB 11H
E5DC  20 15                 BRA SETM1
E5DE  32            SETPUL  PULA
E5DF  A7 00         SETMEM  STAA 00,X
E5E1  A1 00                 CMPA 00,X
```

```
E5E3  27 0E                BEQ SETM1
E5E5  FF BF CA             STX ADR
E5E8  CE BF CA             LDX #ADR
E5EB  8D B8                BSR P4HEXS
E5ED  CE E8 A3     PBADR   LDX #QBADR
E5F0  7E E2 8A             JMP MSGMON
E5F3  39           SETM1   RTS
E5F4  BD E4 E6     SM      JSR NXTADR
E5F7  FE BF CA             LDX ADR
E5FA  FF BF CC             STX ADDL
E5FD  BD E4 E6     SM10    JSR NXTADR
E600  27 0C                BEQ SM30
E602  FE BF CC             LDX ADDL
E605  17                   TBA
E606  8D D7                BSR SETMEM
E608  08                   INX
E609  FF BF CC             STX ADDL
E60C  20 EF                BRA SM10
E60E  7E E2 45     SM30    JMP MONITR
E611  3F           WAITTY  SWI
E612  14                   FCB 14H
E613  81 1B                CMPA #1BH
E615  26 03                BNE W20
E617  7E E2 87             JMP ABORT
E61A  81 7F        W20     CMPA #7FH
E61C  27 F3                BEQ WAITTY
E61E  7D BF E8             TST ECHO
E621  27 03                BEQ W30
E623  BD E5 0B             JSR OUTCH
E626  39           W30     RTS
E627  FE BF CC     INK     LDX ADDL
E62A  08                   INX
E62B  FF BF CC             STX ADDL
E62E  BC BF CE             CPX ADDH
E631  26 02                BNE ADDRS
E633  31                   INS
E634  31                   INS
E635  39           ADDRS   RTS
E636  7E E5 ED     JBAD    JMP PBADR
E639  8D 03        MOVE    BSR MOVE2
E63B  7E E2 45             JMP MONITR
E63E  BD E3 F0     MOVE2   JSR GETRNG
E641  BD E4 E6             JSR NXTADR
E644  27 F0                BEQ JBAD
E646  FE BF CC     MOVE1   LDX ADDL
E649  A6 00                LDAA 00,X
E64B  FE BF CA             LDX ADR
E64E  BD E5 DF             JSR SETMEM
E651  08                   INX
E652  FF BF CA             STX ADR
E655  BD E6 27             JSR INK
E658  20 EC                BRA MOVE1
```

```
E65A  30          RSRSR  TSX
E65B  EE 05              LDX 05,X
E65D  4F                 CLRA
E65E  E6 00              LDAB 00,X
E660  58                 ASLB
E661  49                 ROLA
E662  8D 00              BSR LOCVV
E664  30          LOCVV  TSX
E665  EB 01              ADDB 01,X
E667  A9 00              ADCA 00,X
E669  CB 24              ADDB #24H
E66B  89 01              ADCA #01
E66D  A7 00              STAA 00,X
E66F  E7 01              STAB 01,X
E671  EE 00              LDX 00,X
E673  EB 01              ADDB 01,X
E675  A9 00              ADCA 00,X
E677  30                 TSX
E678  A7 00              STAA 00,X
E67A  E7 01              STAB 01,X
E67C  A6 02              LDAA 02,X
E67E  06                 TAP
E67F  EE 00              LDX 00,X
E681  31                 INS
E682  31                 INS
E683  AD 00              JSR 00,X
E685  30                 TSX
E686  6C 06              INC 06,X
E688  26 02              BNE RSRXIT
E68A  6C 05              INC 05,X
E68C  3B          RSRXIT RTI
E68D  34                 DES
E68E  34                 DES
E68F  34                 DES
E690  34                 DES
E691  34                 DES
E692  C6 09              LDAB #09
E694  30                 TSX
E695  A6 05       PS     LDAA 05,X
E697  A7 00              STAA 00,X
E699  08                 INX
E69A  5A                 DECB
E69B  26 F8              BNE PS
E69D  C6 05              LDAB #05
E69F  30                 TSX
E6A0  A6 02       PC     LDAA 02,X
E6A2  A7 09              STAA 09,X
E6A4  08                 INX
E6A5  5A                 DECB
E6A6  26 F8              BNE PC
E6A8  39                 RTS
E6A9  30                 TSX
```

```
E6AA  C6 05          LDAB #05
E6AC  A6 09    TRC   LDAA 09,X
E6AE  A7 02          STAA 02,X
E6B0  08             INX
E6B1  5A             DECB
E6B2  26 F8          BNE TRC
E6B4  C6 09          LDAB #09
E6B6  A6 03    RS    LDAA 03,X
E6B8  A7 08          STAA 08,X
E6BA  09             DEX
E6BB  5A             DECB
E6BC  26 F8          BNE RS
E6BE  31             INS
E6BF  31             INS
E6C0  31             INS
E6C1  31             INS
E6C2  31             INS
E6C3  39             RTS
E6C4  30             TSX
E6C5  A6 05          LDAA 05,X
E6C7  E6 06          LDAB 06,X
E6C9  A7 04    STAB  STAA 04,X
E6CB  E7 03          STAB 03,X
E6CD  39             RTS
E6CE  30             TSX
E6CF  A6 04    TABX1 LDAA 04,X
E6D1  A7 05          STAA 05,X
E6D3  A6 03          LDAA 03,X
E6D5  A7 06          STAA 06,X
E6D7  39             RTS
E6D8  30             TSX
E6D9  A6 05    XABX1 LDAA 05,X
E6DB  36             PSHA
E6DC  E6 06          LDAB 06,X
E6DE  8D EF          BSR TABX1
E6E0  32             PULA
E6E1  20 E6          BRA STAB
E6E3  34             DES
E6E4  34             DES
E6E5  30             TSX
E6E6  86 09          LDAA #09
E6E8  E6 02    MA    LDAB 02,X
E6EA  E7 00          STAB 00,X
E6EC  08             INX
E6ED  4A             DECA
E6EE  26 F8          BNE MA
E6F0  30             TSX
E6F1  A6 05          LDAA 05,X
E6F3  A7 09          STAA 09,X
E6F5  A6 06          LDAA 06,X
E6F7  A7 0A          STAA 0AH,X
E6F9  39             RTS
```

```
E6FA  30                 TSX
E6FB  A6 09              LDAA 09,X
E6FD  A7 05              STAA 05,X
E6FF  A6 0A              LDAA 0AH,X
E701  A7 06              STAA 06,X
E703  86 09              LDAA #09
E705  E6 08       PULXA  LDAB 08,X
E707  E7 0A              STAB 0AH,X
E709  09                 DEX
E70A  4A                 DECA
E70B  26 F8              BNE PULXA
E70D  31                 INS
E70E  31                 INS
E70F  39                 RTS
E710  30                 TSX
E711  8D C6              BSR XABX1
E713  8D 03              BSR ADDABX1
E715  20 C2              BRA XABX1
E717  30                 TSX
E718  A6 03       ADDABX1 LDAA 03,X
E71A  E6 04              LDAB 04,X
E71C  AB 06       ADDAB  ADDA 06,X
E71E  A7 06              STAA 06,X
E720  E9 05              ADCB 05,X
E722  07          STAUXH TPA
E723  E7 05              STAB 05,X
E725  6D 06              TST 06,X
E727  27 02       TESTZ  BEQ TA
E729  84 FB              ANDA #0FBH
E72B  A7 02       TA     STAA 02,X
E72D  39                 RTS
E72E  30                 TSX
E72F  A6 04              LDAA 04,X
E731  C6 00       ADDZ   LDAB #00
E733  20 E7              BRA ADDAB
E735  30                 TSX
E736  A6 03              LDAA 03,X
E738  20 F7              BRA ADDZ
E73A  30                 TSX
E73B  8D 9C              BSR XABX1
E73D  8D 03              BSR SUBABX1
E73F  20 98              BRA XABX1
E741  30                 TSX
E742  E6 05       SUBABX1 LDAB 05,X
E744  A6 06              LDAA 06,X
E746  A0 03              SUBA 03,X
E748  A7 06              STAA 06,X
E74A  E2 04              SBCB 04,X
E74C  20 D4              BRA STAUXH
E74E  30                 TSX
E74F  E6 04              LDAB 04,X
E751  A6 06       TSUB   LDAA 06,X
```

```
E753  10                 SBA
E754  A7 06              STAA 06,X
E756  E6 05              LDAB 05,X
E758  C2 00              SBCB 000
E75A  20 C6              BRA STAUXH
E75C  30                 TSX
E75D  E6 03              LDAB 03,X
E75F  20 F0              BRA TSUB
E761  8D 11              BSR MPY8
E763  37                 PSHB
E764  16                 TAB
E765  32                 PULA
E766  30                 TSX
E767  20 B3              BRA ADDAB
E769  8D 09              BSR MPY8
E76B  30                 TSX
E76C  E7 03              STAB 03,X
E76E  A7 04              STAA 04,X
E770  07                 TPA
E771  5D                 TSTB
E772  20 B3              BRA TESTZ
E774  86 08     MPY8     LDAA 008
E776  36                 PSHA
E777  4F                 CLRA
E778  30                 TSX
E779  E6 06              LDAB 06,X
E77B  56                 RORB
E77C  24 02     MPYLP    BCC MPYSHFT
E77E  AB 07              ADDA 07,X
E780  46        MPYSHFT  RORA
E781  56                 RORB
E782  6A 00              DEC 00,X
E784  26 F6              BNE MPYLP
E786  31                 INS
E787  39                 RTS
E788  FF                 FCB 0FFH
E789  05                 FCB 05
E78A  FF                 FCB 0FFH
E78B  1F                 FCB 1FH
E78C  FF                 FCB 0FFH
E78D  38                 FCB 38H
E78E  FF                 FCB 0FFH
E78F  40                 FCB 40H
E790  FF                 FCB 0FFH
E791  48                 FCB 48H
E792  FF                 FCB 0FFH
E793  51                 FCB 51H
E794  FF                 FCB 0FFH
E795  66                 FCB 66H
E796  FF                 FCB 0FFH
E797  7A                 FCB 7AH
E798  FF                 FCB 0FFH
```

```
E799  7F                FCB 7FH
E79A  FF                FCB 0FFH
E79B  94                FCB 94H
E79C  FF                FCB 0FFH
E79D  99                FCB 99H
E79E  FF                FCB 0FFH
E79F  9C                FCB 9CH
E7A0  FF                FCB 0FFH
E7A1  A1                FCB 0A1H
E7A2  FF                FCB 0FFH
E7A3  AC                FCB 0ACH
E7A4  FF                FCB 0FFH
E7A5  B8                FCB 0B8H
E7A6  00                FCB 00
E7A7  17                FCB 17H
E7A8  00                FCB 00
E7A9  10                FCB 10H
E7AA  00                FCB 00
E7AB  2F                FCB 2FH
E7AC  00                FCB 00
E7AD  4F                FCB 4FH
E7AE  00                FCB 00
E7AF  5D                FCB 5DH
E7B0  00                FCB 00
E7B1  86                FCB 86H
E7B2  00                FCB 00
E7B3  96                FCB 96H
E7B4  FF                FCB 0FFH
E7B5  AD                FCB 0ADH
E7B6  FF                FCB 0FFH
E7B7  B3                FCB 0B3H
E7B8  30                TSX
E7B9  EE 05             LDX 05,X
E7BB  8D 06             BSR PHEX
E7BD  30                TSX
E7BE  EE 05             LDX 05,X
E7C0  8D 01             BSR PHEX
E7C2  39                RTS
E7C3  A6 00       PHEX  LDAA 00,X
E7C5  8D 29             BSR ASCIIR
E7C7  36                PSHA
E7C8  A6 00             LDAA 00,X
E7CA  8D 20             BSR ASCIIL
E7CC  8D 0E             BSR PUTAX
E7CE  32                PULA
E7CF  8D 10             BSR PUTA
E7D1  30          PINCX TSX
E7D2  6C 08             INC 08,X
E7D4  26 02             BNE PINXRTS
E7D6  6C 07             INC 07,X
E7D8  39          PINXRTS RTS
E7D9  30                TSX
```

```
E7DA  A6 04                LDAA 04,X
E7DC  FE BF F5     PUTAX   LDX ACIAI
E7DF  EE 00                LDX 00,X
E7E1  36           PUTA    PSHA
E7E2  A6 00        PUTRDY  LDAA 00,X
E7E4  85 02                BITA #02
E7E6  27 FA                BEQ PUTRDY
E7E8  32                   PULA
E7E9  A7 01                STAA 01,X
E7EB  39                   RTS
E7EC  44           ASCIIL  LSRA
E7ED  44                   LSRA
E7EE  44                   LSRA
E7EF  44                   LSRA
E7F0  84 0F        ASCIIR  ANDA #0FH
E7F2  8B 30                ADDA #30H
E7F4  81 39                CMPA #39H
E7F6  23 02                BLS ASCRTS
E7F8  8B 07                ADDA #07
E7FA  39           ASCRTS  RTS
E7FB  30           PMESS   TSX
E7FC  EE 05                LDX 05,X
E7FE  A6 00                LDAA 00,X
E800  81 04                CMPA #04
E802  27 06                BEQ PMSRTS
E804  8D D6                BSR PUTAX
E806  8D C9                BSR PINCX
E808  20 F1                BRA PMESS
E80A  39           PMSRTS  RTS
E80B  30                   TSX
E80C  EE 05                LDX 05,X
E80E  8D 05                BSR ALPNUM
E810  07           SCARRY  TPA
E811  30           SETUS   TSX
E812  A7 02                STAA 02,X
E814  39                   RTS
E815  A6 00        ALPNUM  LDAA 00,X
E817  81 41                CMPA #41H
E819  2D 0E                BLT ANNUM
E81B  81 5A                CMPA #5AH
E81D  2E 12                BGT ANNOTOK
E81F  81 C7                CMPA #0C7H
E821  29 10                BVS ANRTS
E823  80 07                SUBA #07
E825  84 0F        ANOK    ANDA #0FH
E827  0D                   SEC
E828  39                   RTS
E829  81 30        ANNUM   CMPA #30H
E82B  2D 04                BLT ANNOTOK
E82D  81 39                CMPA #39H
E82F  2F F4                BLE ANOK
E831  0C           ANNOTOK CLC
```

```
E832  0B                 SEV
E833  39        ANRTS    RTS
E834  20 9B     JPINCX   BRA PINCX
E836  FE BF F5           LDX ACIAI
E839  EE 00              LDX 00,X
E83B  A6 00     INWAIT   LDAA 00,X
E83D  47                 ASRA
E83E  24 FB              BCC INWAIT
E840  A6 01              LDAA 01,X
E842  84 7F              ANDA #7FH
E844  30                 TSX
E845  A7 04              STAA 04,X
E847  39                 RTS
E848  30                 TSX
E849  E6 03              LDAB 03,X
E84B  6F 04              CLR 04,X
E84D  6F 03              CLR 03,X
E84F  30        CONHB    TSX
E850  EE 05              LDX 05,X
E852  8D C1              BSR ALPNUM
E854  25 09              BCS CONFND
E856  5A                 DECB
E857  2F 04              BLE CONENDC
E859  8D D9              BSR JPINCX
E85B  20 F2              BRA CONHB
E85D  20 B1     CONENDC  BRA SCARRY
E85F  30        CONFND   TSX
E860  EE 05              LDX 05,X
E862  8D B1              BSR ALPNUM
E864  29 18              BVS CONNOGD
E866  37                 PSHB
E867  C6 04              LDAB #04
E869  30                 TSX
E86A  68 04     CONSLP   ASL 04,X
E86C  69 05              ROL 05,X
E86E  5A                 DECB
E86F  2E F9              BGT CONSLP
E871  AA 04              ORAA 04,X
E873  A7 04              STAA 04,X
E875  33                 PULB
E876  8D BC              BSR JPINCX
E878  5A                 DECB
E879  2E E4              BGT CONFND
E87B  0D                 SEC
E87C  20 92              BRA SCARRY
E87E  07        CONNOGD  TPA
E87F  4C                 INCA
E880  20 8F              BRA SETUS
                 ;
                 ;
                 ;
                 ;
```

```
E882  4C          CTABLE FCC 'L'
E883  E4 2E              FDB LOAD
E885  47                 FCC 'G'
E886  E4 20              FDB GO
E888  50                 FCC 'P'
E889  E5 2E              FDB PUNCH
E88B  4D                 FCC 'M'
E88C  E6 39              FDB MOVE
E88E  53                 FCC 'S'
E88F  E5 F4              FDB SM
E891  44                 FCC 'D'
E892  E3 4C              FDB DISMEM
E894  52                 FCC 'R'
E895  E2 C5              FDB PREGS
E897  45                 FCC 'E'
E898  E3 E2              FDB EOF
E89A  43                 FCC 'C'
E89B  BF 05              FDB COLD
E89D  57                 FCC 'W'
E89E  BF 0B              FDB WARM
E8A0  4F                 FCC 'O'
E8A1  BF 0B              FDB ODESSEY
E8A3  42          QBADR  FCB 42H
E8A4  41                 FCB 41H
E8A5  44                 FCB 44H
E8A6  20                 FCB 20H
E8A7  41                 FCB 41H
E8A8  44                 FCB 44H
E8A9  52                 FCB 52H
E8AA  04                 FCB 04
E8AB  52          QRNGERR FCB 52H
E8AC  41                 FCB 41H
E8AD  4E                 FCB 4EH
E8AE  47                 FCB 47H
E8AF  45                 FCB 45H
E8B0  20                 FCB 20H
E8B1  45                 FCB 45H
E8B2  52                 FCB 52H
E8B3  52                 FCB 52H
E8B4  04                 FCB 04
E8B5  45          QEOF   FCB 45H
E8B6  4F                 FCB 4FH
E8B7  46                 FCB 46H
E8B8  04                 FCB 04
E8B9  3F          QQUES  FCB 3FH
E8BA  3F                 FCB 3FH
E8BB  3F                 FCB 3FH
E8BC  3F                 FCB 3FH
E8BD  04                 FCB 04
E8BE  43          QCKSMER FCB 43H
E8BF  4B                 FCB 4BH
E8C0  53                 FCB 53H
```

```
E8C1  4D                  FCB 4DH
E8C2  20                  FCB 20H
E8C3  45                  FCB 45H
E8C4  52                  FCB 52H
E8C5  52                  FCB 52H
E8C6  04                  FCB 04
E8C7  54            QTAPER FCB 54H
E8C8  41                  FCB 41H
E8C9  50                  FCB 50H
E8CA  45                  FCB 45H
E8CB  20                  FCB 20H
E8CC  45                  FCB 45H
E8CD  52                  FCB 52H
E8CE  52                  FCB 52H
E8CF  04                  FCB 04
E8D0  53            QTPEOF FCB 53H
E8D1  39                  FCB 39H
E8D2  30                  FCB 30H
E8D3  33                  FCB 33H
E8D4  30                  FCB 30H
E8D5  30                  FCB 30H
E8D6  30                  FCB 30H
E8D7  30                  FCB 30H
E8D8  46                  FCB 46H
E8D9  43                  FCB 43H
E8DA  04                  FCB 04
E8DB  0D            QSI   FCB 0DH
E8DC  0A                  FCB 0AH
E8DD  00                  FCB 00
E8DE  00                  FCB 00
E8DF  00                  FCB 00
E8E0  00                  FCB 00
E8E1  53                  FCB 53H
E8E2  31                  FCB 31H
E8E3  04                  FCB 04
E8E4  20 20 20 20   Q6SPACE FCC '     '
E8E8  20 20
E8EA  04                  FCB 04H
E8EB  20 43 20 20   QREGNAM FCC ' C  B  A   X    P    S'
E8EF  42 20 20 41
E8F3  20 20 20 58
E8F7  20 20 20 20
E8FB  20 50 20 20
E8FF  20 20 20 53
E903  04                  FCB 04H
                    ;
                    ;
                    ;*****************************************************************
E904                      get navinit.a        ;INITIALIZATION OF I/O DEVICES
                    ;
                    ;
                    ;
```

```
                ;       INTERRUPT HANDELER FOR TIME CLOCK AND SONAR AT 10 HZ
                ;       THIS SUBROUTINE IS CALLED BY HARDWARE INTERRUPT (IRQ) AND AS
                ;       SUCH, ALL REGISTERS AND SYSTEM STATUS ARE PRESERVED ON THE STACK.
                ;       ON ENTRY, THE PROCESSOR WILL SET THE INTERRUPT MASK.  IT WILL
                ;       CLEAR THE MASK ON EXIT AND RESTORE THE PROCESSOR REGISTERS/STATUS
                ;       ON EXIT.
                ;
E904  BD E9 1E  TICHAN  JSR   FEE           ;GO CHECK OPTICAL SHAFT ENCODERS FIRST
E907  3B                RTI
                ;
                ;
                ;
E908  6C 00     INCMEM  INC X       ;Increment memory contents
E90A  26 04             BNE INRET   ;If result not 0, return
E90C  09                DEX         ;Advance meory pointer
E90D  5A                DECB        ;Decrement precision counter
E90E  26 F8             BNE INCMEM  ;If counter <>0, continue incrementing
E910  39        INRET   RTS         ;Return
                ;
                ;
E911  A6 00     DCRMEM  LDAA X      ;Fetch byte from memory
E913  80 01             SUBA #01H   ;Decrement the byte
E915  A7 00             STAA X      ;Save byte in memory
E917  24 04             BCC DCRET   ;If no borrow required, return
E919  09                DEX         ;Advance memory pointer
E91A  5A                DECB        ;Decrement precision counter
E91B  26 F4             BNE DCRMEM  ;If counter <>0, continue decrementing
E91D  39        DCRET   RTS         ;Return
                ;
                ;
                ;*****************************************************
                ;*                                                   *
                ;*                                                   *
                ;*      DATE:   8 OCT 84                             *
                ;*      VERSION: 1.0                                 *
                ;*      NAME: FEE      (AS IN THE NURSERY RHYME)     *
                ;*      FUNCTION: THIS INTERRUPT HANDLER UPDATES THE COUNTS  *
                ;*                IN PREDEFINED INCREMENTS (DEFAULT 1" (3FH) *
                ;*                WHEN THE PTM REACHES ITS TIME-OUT (I.E.    *
                ;*                INCREMENT DISTANCE HAS BEEN MEASURED, THEN *
                ;*                THE PTM AUTOMATICALLY RESETS THE COUNTER   *
                ;*                AND THIS ROUTINE INCREMENTS THE COUNT IN   *
                ;*                MEMORY                                     *
                ;*                THE FRONT WHEEL OSE MEASURES THE ANGULAR   *
                ;*                POSITION OF THE FRONT WHEEL AND NOT DISTANCE *
                ;*                TRAVELED BY THE FRONT WHEEL.               *
                ;*                                                           *
                ;*      OUTPUTS: INCREMENTS THE FOLLOWING REGISTERS IN MEMORY: *
                ;*               FWCOUNT                                     *
                ;*               RWCOUNT1, RWCOUNT2, RWMOD1, RWMOD2,         *
                ;*               LWCOUNT1, LWCOUNT2, LWMOD1, LWMOD2          *
                ;*****************************************************
```

```
                        ;
                        ;
                        ;
E91E  B6 C0 31          FEE         LDAA    IO+PTMF+PTMSTAT     ;GET FRONT WHEEL STATUS
E921  48                            ASLA                        ;CHECK FRONT WHEEL IRQ FLAG
E922  25 0F                         BCS     FRONTWHEEL          ;CONTINUE IF TRUE INTERRUPT
E924  B6 C0 41          FIE         LDAA    IO+PTMR+PTMSTAT     ;ELSE GET RIGHT WHEEL STATUS
E927  48                            ASLA                        ;CHECK RIGHT WHEEL IRQ FLAG
E928  25 1E                         BCS     RIGHTWHEEL          ;CONTINUE IF TRUE INTERRUPT
E92A  B6 C0 39          FOE         LDAA    IO+PTML+PTMSTAT     ;ELSE GET LEFT WHEEL STATUS
E92D  48                            ASLA                        ;CHECK LEFT WHEEL IRQ FLAG
E92E  25 37                         BCS     LEFTWHEEL           ;CONTINUE IF TRUE INTERRUPT
E930  7E E9 C2          FUM         JMP     TICHAN1             ;DONE WITH OSE INTERRUPTS
                        ;I
                        ;  HEAR
                        ;      THE
                        ;          CHIRP
                        ;               OF
                        ;                  SONAR
                        ;                      ONE!
                        ;      (SO GO CHECK THE SONAR INTERRUPTS)
                        ;
                        ;
E933  47                FRONTWHEEL  ASRA                        ;
E934  47                            ASRA                        ;SEE IF COUNTER 1 GENERATED IRQ
E935  24 06                         BCC     CHKFWC2             ;IF NOT THEN SERVICE COUNTER 2
E937  7A BE F8          CHKFWC1     DEC     FWCOUNT+1           ;WHEEL HAS TURNED CCW
E93A  FE C0 32                      LDX     IO+PTMF+T.CNT1      ;CLEAR INTERRUPT
E93D  47                CHKFWC2     ASRA                        ;SEE IF COUNTER 2 GENERATED IRQ
E93E  24 06                         BCC     FWDONE              ;IF NOT CHECK OTHER WHEELS
E940  7C BE F8                      INC     FWCOUNT+1           ;WHEEL HAS TURNED CLOCKWISE
E943  FE C0 34                      LDX     IO+PTMF+T.CNT2      ;CLEAR INTERRUPT
E946  20 DC             FWDONE      BRA     FIE                 ;GO CHECK OTHER WHEELS
                        ;
E948  47                RIGHTWHEEL  ASRA                        ;
E949  47                            ASRA                        ;SEE IF COUNTER 1 GENERATED IRQ
E94A  24 0B                         BCC     CHKRWC2             ;IF NOT THEN SERVICE COUNTER 2
E94C  C6 02             CHKRWC1     LDAB    #02                 ;#BYTES IN RWCOUNT1 (SIZE)
E94E  CE BE FA                      LDX     #RWCOUNT1+1         ;SET POINTER TO RWCOUNT1 LSBYTE
E951  BD E9 08                      JSR     INCMEM              ;WHEEL HAS MOVED FORWARD 1"
                                                                ;THAT'S ONE SMALL STEP FOR MARRS-1
                                                                ;ONE GIANT LEAP FOR ROBOT KIND!!
E954  FE C0 42                      LDX     IO+PTMR+T.CNT1      ;CLEAR INTERRUPT
E957  47                CHKRWC2     ASRA                        ;SEE IF COUNTER 2 GENERATED IRQ
E958  24 0B                         BCC     RWDONE              ;IF NOT CHECK OTHER WHEELS
E95A  C6 02                         LDAB    #02                 ;#BYTES IN RWCOUNT2 (SIZE)
E95C  CE BE FC                      LDX     #RWCOUNT2+1         ;SET POINTER TO RWCOUNT2 LSBYTE
E95F  BD E9 08                      JSR     INCMEM              ;WHEEL HAS MOVED BACKWARDS
E962  FE C0 44                      LDX     IO+PTMR+T.CNT2      ;CLEAR INTERRUPT
E965  20 C3             RWDONE      BRA     FOE                 ;GO CHECK OTHER WHEELS
                        ;
E967  47                LEFTWHEEL   ASRA                        ;
```

```
E968  47                        ASRA                        ;SEE IF COUNTER 1 GENERATED IRQ
E969  24 0B                     BCC     CHKLWC2             ;IF NOT THEN SERVICE COUNTER 2
E96B  C6 02           CHKLWC1   LDAB    #02                 ;#BYTES IN LWCOUNT1 (SIZE)
E96D  CE BE FE                  LDX     #LWCOUNT1+1         ;SET POINTER TO LWCOUNT1 LSBYTE
E970  BD E9 08                  JSR     INCMEM              ;WHEEL HAS MOVED FORWARD 1"
E973  FE C0 3A                  LDX     IO+PTML+T.CNT1      ;CLEAR INTERRUPT
E976  47              CHKLWC2   ASRA                        ;SEE IF COUNTER 2 GENERATED IRQ
E977  24 0B                     BCC     LWDONE              ;IF NOT CHECK OTHER WHEELS
E979  C6 02                     LDAB    #02                 ;#BYTES IN LWCOUNT2 (SIZE)
E97B  CE BF 00                  LDX     #LWCOUNT2+1         ;SET POINTER TO LWCOUNT2 LSBYTE
E97E  BD E9 08                  JSR     INCMEM              ;WHEEL HAS MOVED BACKWARDS
E981  FE C0 3C                  LDX     IO+PTML+T.CNT2      ;CLEAR INTERRUPT
E984  20 AA           LWDONE    BRA     FUM                 ;RETURN TO MAIN INTERRUPT HANDLER
                      ;
                      ;*************************************************************
                      ;*                                                           *
                      ;*                                                           *
                      ;*      DATE:   8 Oct 84                                     *
                      ;*      VERSION: 1.0                                         *
                      ;*      NAME: OSEPRELOAD                                     *
                      ;*      MODULE NUMBER:                                       *
                      ;*      FUNCTION: LOADS VALUES YOU SPECIFY INTO PTM LATCHES  *
                      ;*                OF MARRS-1 OPTICAL SHAFT ENCODER PTM'S     *
                      ;*      INPUTS: PRELOAD VALUES (16 BIT) MUST BE IN X REGISTER *
                      ;*              USE THE FOLLOWING FORMULA TO CONVERT FROM    *
                      ;*              INCHES TO COUNTS:                            *
                      ;*                                                           *
                      ;*                    COUNTS = ($40 * DISTANCE (INCH) )  -1  *
                      ;*              THIS IS FOR THE LEFT AND RIGHT WHEELS        *
                      ;*            NOTE: EACH WHEEL COUNT PRELOAD ROUTINE IS A    *
                      ;*                  SEPERATE CALLABLE ROUTINE                *
                      ;*                                                           *
                      ;*      OUTPUTS: THE FOLLOWING MEMORY REGISTERS ARE AFFECTED: *
                      ;*               BCPTMF1, BCPTMF2, BCPTMR1, BCPTMR2, BCPTML2, *
                      ;*               AND BCPTML2                                 *
                      ;*                                                           *
                      ;*                                                           *
                      ;*      HISTORY:                                             *
                      ;*                                                           *
                      ;*************************************************************
                      ;
                      ;
                      ;
                      ;OSE PRELOAD ROUTINES
                      ;
E986  FF BE AB        PRELPTMF  STX     BCPTMF1             ;CLOCKWISE ROTATION
E989  FF BE AD                  STX     BCPTMF2             ;COUNTERCLOCKWISE ROTATION
E98C  BD EC 27                  JSR     INTPTMF             ;RE-INITIALIZE FRONT WHEEL
                                                            ;WITH NEW VALUES
E98F  39                        RTS                         ;RETURN TO CALLER
E990  FF BE B7        PRELPTMR  STX     BCPTMR1             ;FORWARD MOTION
E993  FF BE B9                  STX     BCPTMR2             ;REVERSE MOTION
```

```
E996  BD EC 7F                JSR   INTPTMR      ;RE-INITIALIZE RIGHT WHEEL
E999  39                      RTS                ;RETURN TO CALLER
E99A  FF BE B1   PRELPTML     STX   BCPTML1      ;FORWARD MOTION
E99D  FF BE B3                STX   BCPTML2      ;REVERSE MOTION
E9A0  BD EC 53                JSR   INTPTML      ;RE-INITIALIZE LEFT WHEEL
E9A3  39                      RTS                ;RETURN TO CALLER
                 ;
                 ;*****************************************************
                 ;*                                                   *
                 ;*                                                   *
                 ;*      DATE:   8 OCT 84                             *
                 ;*      VERSION: 1.0                                 *
                 ;*      NAME: FWRESET, RWRESET, AND LWRESET          *
                 ;*                                                   *
                 ;*      FUNCTION: ALLOWS USER TO RESET WHEEL COUNT VALUES *
                 ;*                TO ANY VALUE HE DESIRES WITHIN THE *
                 ;*                FOLLOWING LIMITS:                  *
                 ;*                FWCOUNT  MAX 599 DECIMAL           *
                 ;*                RWCOUNT1, RWCOUNT2, LWCOUNT1, AND LWCOUNT2 *
                 ;*                ALL CAN HAVE MAX COUNTS OF 0FFFFH  *
                 ;*                THIS ROUTINE ALSO CLEARS THE MODULO COUNT *
                 ;*                FOR THE LEFT AND RIGHT WHEELS      *
                 ;*                                                   *
                 ;*      INPUTS:   X REG - NEW VALUE AND CALL THE     *
                 ;*                APPROPRIATE ROUTINE                *
                 ;*                                                   *
                 ;*                                                   *
                 ;*****************************************************
                 ;
                 ;
E9A4  FF BE F7   FWRESET      STX   FWCOUNT
E9A7  39                      RTS
E9A8  FF BE F9   RWRESET      STX   RWCOUNT1
E9AB  FF BE FB                STX   RWCOUNT2
E9AE  7F BF 01                CLR   RWMOD1
E9B1  7F BF 02                CLR   RWMOD2
E9B4  39                      RTS
E9B5  FF BE FD   LWRESET      STX   LWCOUNT1
E9B8  FF BE FF                STX   LWCOUNT2
E9BB  7F BF 03                CLR   LWMOD1
E9BE  7F BF 04                CLR   LWMOD2
E9C1  39                      RTS
                 ;
                 ;
                 ;
                 ;  COMMENTS CONCERNING THE PTM'S FOR THE WHEEL OPTICAL SHAFT ENCODERS
                 ;
                 ;  CIRCUMFERENCE OF LEFT AND RIGHT WHEELS IS 18.75"
                 ;  THERE ARE 1200 COUNTS PER REVOLUTION AVAILABLE WITH THE
                 ;  DATAMETRICS K-3 OPTICAL SHAFT ENCODER.   THUS THERE ARE
                 ;  64 COUNTS (3FH) PER 1" DISTANCE TRAVELED
                 ;
```

```
                ;
                ;   RIGHT WHEEL:
                ;      FORWARD MOTION
                ;      A CHANNEL (COUNTER 2) GATES B CHANNEL (COUNTER 1)
                ;
                ;      REVERSE MOTION
                ;      B CHANNEL (COUNTER 1) GATES A CHANNEL (COUNTER 2)
                ;
                ;   LEFT WHEEL:
                ;      FORWARD MOTION
                ;      B CHANNEL (COUNTER 2) GATES A CHANNEL (COUNTER 1)
                ;
                ;      REVERSE MOTION
                ;      A CHANNEL (COUNTER 1) GATES B CHANNEL (COUNTER 2)
                ;
                ;      FRONT WHEEL PTM KEEPS TRACK OF ABSOLUTE HEADING
                ;      OF FRONT DRIVE WHEEL.  WITH THE DRIVE WHEEL CENTERED,
                ;      THE COUNT AT FWCOUNT+1 SHOULD BE $49.
                ;      WITH THE FRONT DRIVE WHEEL MAX LEFT FWCOUNT+1 SHOULD BE $FF.
                ;      WITH THE FRONT DRIVE WHEEL 90 DEGREES RIGHT OF CENTER, THE FWCOUNT+1
                ;      SHOULD BE $94.
                ;      THIS IS ASSUMING THAT A DEFAULT VALUE OF $03 IS USED
                ;      AS AN INCREMENTAL VALUE ON THE FRONT WHEEL PTM ALSO
                ;      KNOWN AS BCPTMF1 OR BCPTMF2
                ;
                ;   FRONT WHEEL:
                ;
                ;      CLOCKWISE MOTION
                ;      B CHANNEL (COUNTER 2) GATES A CHANNEL (COUNTER 1)
                ;
                ;      COUNTER-CLOCKWISE MOTION
                ;      A CHANNEL (COUNTER 1) GATES B CHANNEL (COUNTER 2)
                ;
                ;
                ;
                ;
E9C2  CE C0 00  TICHAN1 LDX   #IO            ;POINT TO I/O AREA
E9C5  A6 49             LDAA  PIAAB+P.SRA,X  ;GET PIA A STATUS
E9C7  48                ASLA                 ;CHECK INTERRUPT FLAG OF PIA A
E9C8  25 03             BCS   TICHAN2        ;CONTINUE IF TRUE INTERRUPT
E9CA  7E BE C7          JMP   MORETIC        ;ELSE RETURN TO CALLER
                ;
E9CD  EE 1A     TICHAN2 LDX   PTMAB+T.CNT1,X ;GET SONAR READING FROM CHANNEL A
E9CF  FF BE E6          STX   TICTEMP0       ;SAVE IT
E9D2  B6 BE E7          LDAA  TICTEMP0+1     ;GET LOW 8 BITS
E9D5  43                COMA                 ;DATA IS IN NEGATIVE 1'S COMPLEMENT
                                             ;SO WE MUST CONVERT IT TO BE POSITIVE
                                             ;THE DISTANCE MEASURED
                                             ;IS FROM THE CENTER OF THE ROBOT
E9D6  B7 BE C1          STAA  SONARA
                ;
E9D9  CE C0 00          LDX   #IO            ;POINT TO I/O AREA
```

```
E9DC  EE 1C                LDX   PTMAB+T.CNT2,X  ;GET SONAR READING FROM CHANNEL B
E9DE  FF BE E6             STX   TICTEMP0        ;SAVE IT
E9E1  B6 BE E7             LDAA  TICTEMP0+1      ;GET LOW 8 BITS
E9E4  43                   COMA                  ;DATA IS IN ONE'S COMPLEMENT
                                                 ;SO WE MUST CONVERT IT TO BE POSITIVE
                                                 ;THE DISTANCE MEASURED
                                                 ;IS FROM THE CENTER OF THE ROBOT
E9E5  B7 BE C2             STAA  SONARB
                     ;
E9E8  CE C0 00             LDX   #IO             ;POINT TO I/O AREA
E9EB  EE 22                LDX   PTMCD+T.CNT1,X  ;GET SONAR READING FROM CHANNEL C
E9ED  FF BE E6             STX   TICTEMP0        ;SAVE IT
E9F0  B6 BE E7             LDAA  TICTEMP0+1      ;GET LOW 8 BITS
E9F3  43                   COMA                  ;DATA IS IN ONE'S COMPLEMENT
                                                 ;SO WE MUST CONVERT IT TO BE POSITIVE
                                                 ;THE DISTANCE MEASURED
                                                 ;IS FROM THE CENTER OF THE ROBOT
E9F4  B7 BE C3             STAA  SONARC
                     ;
E9F7  CE C0 00             LDX   #IO             ;POINT TO I/O AREA
E9FA  EE 24                LDX   PTMCD+T.CNT2,X  ;GET SONAR READING FROM CHANNEL D
E9FC  FF BE E6             STX   TICTEMP0        ;SAVE IT
E9FF  B6 BE E7             LDAA  TICTEMP0+1      ;GET LOW 8 BITS
EA02  43                   COMA                  ;DATA IS IN ONE'S COMPLEMENT
                                                 ;SO WE MUST CONVERT IT TO BE POSITIVE
                                                 ;THE DISTANCE MEASURED
                                                 ;IS FROM THE CENTER OF THE ROBOT
EA03  B7 BE C4             STAA  SONARD
                     ;
EA06  FE C0 2E             LDX   IO+PTMV+T.CNT3  ;UPDATE TIME SINCE TIME ZERO
EA09  08                   INX
EA0A  FF BE D9             STX   TICTIME         ;TIME FROM COUNTER IS IN ONE'S COMPLEMENT
EA0D  73 BE D9             COM   TICTIME
EA10  73 BE DA             COM   TICTIME+1
EA13  FE BE D9             LDX   TICTIME
EA16  FF BE C5             STX   SONTIME         ;UPDATE TIME OF LAST SONAR READING
EA19  CE C0 00             LDX   #IO             ;POINT TO IO AREA
EA1C  A6 48                LDAA  PIAAB+PIAPA,X   ;GET SONAR SELECTED FOR A CHANNEL
EA1E  B7 BE BD             STAA  SONARSLA        ;TELL USER WHICH SONAR WAS SELECTED
EA21  A6 4A                LDAA  PIAAB+PIAPB,X   ;GET SONAR SELECTED FOR B CHANNEL
EA23  B7 BE BE             STAA  SONARSLB        ;TELL USER WHICH SONAR WAS SELECTED
EA26  A6 50                LDAA  PIACD+PIAPC,X   ;GET SONAR SELECTED FOR C CHANNEL
EA28  B7 BE BF             STAA  SONARSLC        ;TELL USER WHICH SONAR WAS SELECTED
EA2B  A6 52                LDAA  PIACD+PIAPD,X   ;GET SONAR SELECTED FOR D CHANNEL
EA2D  B7 BE C0             STAA  SONARSLD        ;TELL USER WHICH SONAR WAS SELECTED
EA30  7D BE E1             TST   SONCHANGE       ;SEE IF NEW SONARS ARE TO BE SELECTED
EA33  27 03                BEQ   TICHAN3
EA35  7E BE C7             JMP   MORETIC
EA38  B6 BE E2     TICHAN3 LDAA  SONNEXA         ;GET NEXT SONAR SELECT BYTE FOR SONAR A
EA3B  A7 48                STAA  PIAAB+PIAPA,X   ;WRITE IT OUT TO THE PIA
EA3D  B6 BE E3             LDAA  SONNEXB         ;GET NEXT SONAR SELECT BYTE FOR SONAR B
EA40  A7 4A                STAA  PIAAB+PIAPB,X   ;WRITE IT OUT TO THE PIA
```

```
EA42   B6 BE E4          LDAA   SONNEXC          ;GET NEXT SONAR SELECT BYTE FOR SONAR C
EA45   A7 50             STAA   PIACD+PIAPC,X    ;WRITE IT OUT TO THE PIA
EA47   B6 BE E5          LDAA   SONNEXD          ;GET NEXT SONAR SELECT BYTE FOR SONAR D
EA4A   A7 52             STAA   PIACD+PIAPD,X    ;WRITE IT OUT TO THE PIA
EA4C   86 55             LDAA   #055H
EA4E   B7 BE E1          STAA   SONCHANGE        ;TELL USER SONAR SELECTS HAVE BEEN CHANGED
EA51   7E BE C7          JMP    MORETIC
                 ;
                 ;
                 ;
                 ;
                 ;       SUBROUTINE:     READSONAR
                 ;                       BUFFERS USER PROGRAM FROM INTERRUPT PROCESSING
                 ;                       OF SONAR DATA.  SONAR SELECT-READING PAIRS IN
                 ;                       LOCATIONS SONDATSA THRU SONDATRD ARE PLACED THERE
                 ;                       BY THIS SUBROUTINE AND AS SUCH ARE GUARENTEED TO
                 ;                       REPRESENT VALID/CURRENT SONAR READINGS.
                 ;
                 ;       ****************************************************************
                 ;
                 ;            P L E A S E   T A K E   N O T E   ! ! ! ! ! ! !
                 ;
                 ;       ****************************************************************
                 ;
                 ;            SONAR DATA READINGS SHOULD BE OBTAINED BY USER PROGRAMS
                 ;            BY CALLING THIS SUBROUTINE AND THEN CHECKING THE VALUES
                 ;            STORED IN LOCATIONS SONDATSA THRU SONDATRD I.E.:
                 ;
                 ;                  SONDATSA    THIS IS THE SELECT BYTE FOR SONAR A
                 ;
                 ;                  SONDATRA    THIS IS THE READING FROM SONAR A
                 ;
                 ;                  SONDATSB    THIS IS THE SELECT BYTE FOR SONAR B
                 ;
                 ;                  SONDATRB    THIS IS THE READING FROM SONAR B
                 ;
                 ;                  SONDATSC    THIS IS THE SELECT BYTE FOR SONAR C
                 ;
                 ;                  SONDATRC    THIS IS THE READING FROM SONAR C
                 ;
                 ;                  SONDATSD    THIS IS THE SELECT BYTE FOR SONAR D
                 ;
                 ;                  SONDATRD    THIS IS THE READING FROM SONAR D
                 ;
                 ;       ****************************************************************
                 ;
                 ;
EA54   0F        READSONAR SEI                   ;MASK THE INTERRUPT SYSTEM
EA55   36                  PSHA                  ;SAVE THE A REGISTER
EA56   B6 BE BD            LDAA   SSLA           ;GET SONAR SELECT BYTE A
EA59   B7 BE FF            STAA   SONDATSA       ;STORE SONAR SELECT BYTE A
EA5C   B6 BE BE            LDAA   SSLB           ;GET SONAR SELECT BYTE B
```

```
EA5F  B7 BE F1                STAA  SONDATSB      ;STORE SONAR SELECT BYTE B
EA62  B6 BE BF                LDAA  SSLC          ;GET SONAR SELECT BYTE C
EA65  B7 BE F3                STAA  SONDATSC      ;STORE SONAR SELECT BYTE C
EA68  B6 BE C0                LDAA  SSLD          ;GET SONAR SELECT BYTE D
EA6B  B7 BE F5                STAA  SONDATSD      ;STORE SONAR SELECT BYTE D
EA6E  B6 BE C1                LDAA  SONARA        ;GET SONAR READING FOR SONAR A
EA71  B7 BE F0                STAA  SONDATRA      ;STORE SONAR READING FOR SONAR A
EA74  B6 BE C2                LDAA  SONARB        ;GET SONAR READING FOR SONAR B
EA77  B7 BE F2                STAA  SONDATRB      ;STORE SONAR READING FOR SONAR B
EA7A  B6 BE C3                LDAA  SONARC        ;GET SONAR READING FOR SONAR C
EA7D  B7 BE F4                STAA  SONDATRC      ;STORE SONAR READING FOR SONAR C
EA80  B6 BE C4                LDAA  SONARD        ;GET SONAR READING FOR SONAR D
EA83  B7 BE F6                STAA  SONDATRD      ;STORE SONAR READING FOR SONAR D
EA86  7D BE EE                TST   INTMASK       ;CHECK TO SEE IF OTHERS WANT INTERRUPTS MASKED
EA89  26 01                   BNE   RDSONDONE     ;DONE IF YES
EA8B  0E                      CLI                 ;ELSE CLEAR INTERRUPT MASK
EA8C  32              RDSONDONE PULA              ;RESTORE A REGISTER
EA8D  39                      RTS                 ;RETURN TO CALLER
                      ;
                      ;
                      ;
                      ;       SUBROUTINE POS (PUSH ON STACK) IS REENTRANT BUT MAY NOT
                      ;       BE USED BY AN INTERRUPT ROUTINE SINCE THE SYSTEM TEMPORARY
                      ;       REGISTERS ARE USED.
                      ;       POS PUSHES N BYTES ONTO THE STACK.  ON ENTRY, THE A REGISTER
                      ;       CONTAINS THE BYTE COUNT (N) AND THE X REGISTER POINTS TO THE
                      ;       FIRST BYTE TO BE PUSHED ON TO THE STACK.  THE B AND C REGISTERS
                      ;       ARE CLOBBERED.  ON RETURN, X = X + N + 1,  A = N, SP = SP - (N + 1)
                      ;       BECAUSE THE STACK GROWS DOWNWARD!  THE STACK POINTER MUST EVENTUALLY
                      ;       RETURN TO IT'S PREVIOUS VALUE OR OTHER SYSTEM PROGRAMS OR DATA WILL
                      ;       BE CLOBBERED BY THE DOWNWARD GROWING STACK!
                      ;
EA8E  0F              POS     SEI                 ;MASK HARDWARE INTERRUPTS
EA8F  B7 BF D5                STAA  TEMP0         ;SAVE THE A REGISTER
EA92  FF BF D7                STX   TEMP1         ;AND THE X REGISTER
EA95  30                      TSX                 ;GET THE RETURN ADDRESS OF THE SUBROUTINE
                                                  ;CALLER
EA96  EE 00                   LDX   0,X
EA98  FF BF D9                STX   TEMP2         ;SAVE THE RETURN ADDRESS
EA9B  FE BF D7                LDX   TEMP1         ;POINT TO THE BYTES TO BE PUSHED ON THE STACK
EA9E  16                      TAB                 ;BYTE COUNT IS NOW IN B REGISTER
                      ;
EA9F  A6 00           LOOPPOS1 LDAA 0,X           ;LOOP HERE N TIMES
EAA1  36                      PSHA                ;PUSHING VALUES ONTO THE STACK
EAA2  08                      INX                 ;POINT TO NEXT BYTE
EAA3  5A                      DECB                ;ONE LESS BYTE TO PUSH
EAA4  26 F9                   BNE   LOOPPOS1      ;IF B IS NOT ZERO, LOOP UNTIL DONE
                      ;
EAA6  B6 BF DA                LDAA  TEMP2+1       ;ELSE PUSH RETURN ADDRESS
EAA9  36                      PSHA                ;ONTO THE STACK
EAAA  B6 BF D9                LDAA  TEMP2
EAAD  36                      PSHA
```

```
EAAE   B6 BF D5            LDAA   TEMP0        ;RESTORE THE BYTE COUNT TO THE A REGISTER
EAB1   F6 BE EE            LDAB   INTMASK      ;CHECK THE INTERRUPT MASK BYTE
EAB4   26 01               BNE    POSDONE      ;IF NOT ZERO WE ARE DONE
EAB6   0E                  CLI                 ;ELSE CLEAR THE INTERRUPT FLAG AND
EAB7   39          POSDONE RTS                 ;RETURN TO CALLER
                   ;
                   ;
                   ;
                   ;
                   ;       SUBROUTINE: SIZEMEM SIZES MEMORY.  IF PIAAB BIT CA-2 IS HIGH,
                   ;                           THEN DATA IN ROMS SHAREING ADDRESS SPACE
                   ;                           WITH RAMS WILL BE LOADED INTO THE RAMS AS
                   ;                           A SIDE EFFECT. RAMS WILL APPEAR AS ROMS
                   ;                           UNTIL CA-2 IS SET LOW.  USE SUBROUTINE
                   ;                           ROMLAYRAM FOR AUTOMATIC ROM TO RAM OVERLAY
                   ;                           AND CA-2 SET TO LOW.
                   ;
EAB8   0F          SIZEMEM SEI                 ;SET INTERRUPT MASK
EAB9   7F BF D5            CLR    TEMP0        ;CLEAR GOOD MEMORY FLAG ($00=NOT GOOD,
                                                ; $FF=GOOD)
EABC   FE BE DD            LDX    RAMSIZEL     ;POINT TO LOW RAM ADDRESS
                   ;
EABF   A6 00       SIZELP1 LDAA   0,X          ;SAVE VALUE OF MEMORY ADDRESS IN A REGISTER
EAC1   C6 55               LDAB   #055H        ;START MEMORY TEST TO SEE IF LOCATION IS GOOD
EAC3   E7 00               STAB   0,X
EAC5   E6 00               LDAB   0,X
EAC7   C1 55               CMPB   #055H
EAC9   26 19               BNE    BADSZMEM
EACB   C6 AA               LDAB   #0AAH
EACD   E7 00               STAB   0,X
EACF   E6 00               LDAB   0,X
EAD1   C1 AA               CMPB   #0AAH
EAD3   26 0F               BNE    BADSZMEM
EAD5   A7 00               STAA   0,X          ;RESTORE RAM BYTE AS IT WAS BEFORE
EAD7   7D BF D5            TST    TEMP0        ;IS THIS THE FIRST GOOD BYTE?
EADA   27 15               BEQ    FSTSZGD      ;BRANCH IF YES
EADC   08                  INX                 ;ELSE POINT TO NEXT MEMORY LOCATION
EADD   BC BE DF            CPX    RAMSIZEH     ;ARE WE AT THE END OF THE RAM SIZE TEST?
EAE0   27 1D               BEQ    DNESZMEM     ;IF YES THEN DONE
EAE2   20 DB               BRA    SIZELP1      ;ELSE CONTINUE MEMORY SIZE LOOP
EAE4   A7 00       BADSZMEM STAA  0,X          ;RESTORE RAM BYTE AS IT WAS
                                               ;(ROM OVERLAY TO RAM OCCURS HERE IF
                                               ;PIAA CA-2 IS HIGH!)
EAE6   7F BF D5            CLR    TEMP0        ;CLEAR GOOD MEMORY FLAG
EAE9   08                  INX                 ;POINT TO NEXT MEMORY LOCATION
EAEA   BC BE DF            CPX    RAMSIZEH     ;ARE WE AT THE END OF THE RAM SIZE TEST?
EAED   27 10               BEQ    DNESZMEM     ;IF YES THEN DONE
EAEF   20 CE               BRA    SIZELP1      ;CONTINUE MEMORY SIZE LOOP
EAF1   FF BE DD    FSTSZGD STX    RAMSIZEL     ;SAVE ADDRESS OF FIRST GOOD RAM
EAF4   73 BF D5            COM    TEMP0        ;SET GOOD MEMORY FLAG
EAF7   08                  INX                 ;POINT TO NEXT MEMORY LOCATION
EAF8   BC BE DF            CPX    RAMSIZEH     ;ARE WE AT THE END OF THE RAM SIZE TEST?
```


131

```
EAFB  27 02                BEQ   DNESZMEM      ;IF YES THEN DONE
EAFD  20 C0                BRA   SIZELP1       ;CONTINUE MEMORY SIZE LOOP
EAFF  09            DNESZMEM DEX
EB00  FF BE DF             STX   RAMSIZEH      ;STORE ADDRESS OF LAST MEMORY LOCATION TESTED
EB03  B6 BE EE             LDAA  INTMASK       ;CHECK TO SEE IF MASK IS TO BE LEFT SET
EB06  26 01                BNE   DSZMEM2       ;RETURN TO CALLER IF MASK IS TO BE LEFT SET
EB08  0E                   CLI                 ;ELSE CLEAR MASK AND
EB09  39            DSZMEM2 RTS                ;RETURN TO CALLER
                    ;
                    ;
                    ;
                    ;
                    ;       SUBROUTINE:  ROMLAYRAM        OVERLAYS ROM TO RAM AND RETURNS
                    ;                                     RAM TO TRUE RAM STATE OVER ENTIRE
                    ;                                     PROCESSOR ADDRESS SPACE
                    ;
EB0A  CE 00 00      ROMLAYRAM      LDX   #XZERO         ;POINT TO LOW MEMORY
EB0D  FF BE DD                     STX   RAMSIZEL
EB10  CE A0 00                     LDX   #0A000H        ;LAST USER RAM + 1
EB13  FF BE DF                     STX   RAMSIZEH
EB16  B6 BE 95      ROMOVERRAM     LDAA  CRPIAA         ;ENABLE ROM TO RAM OVERLAY
EB19  8A 38                        ORAA  #038H
EB1B  B7 C0 49                     STAA  IO+PIAAB+PIACRA
EB1E  BD EA B8                     JSR   SIZEMEM        ;SIZE MEMORY AND OVERLAY ROM TO RAM
EB21  B6 BE 95                     LDAA  CRPIAA         ;RESTORE PIA A TO PREVIOUS MODE
EB24  B7 C0 49                     STAA  IO+PIAAB+PIACRA ;THIS DISABLES THE ROM TO RAM OVERLAY
                                                        ;PROCESS AND MAKES RAM LOOK LIKE RAM
EB27  CE 00 00                     LDX   #XZERO         ;POINT TO LOW MEMORY
EB2A  FF BE DD                     STX   RAMSIZEL
EB2D  CE C0 00                     LDX   #IO            ;POINT TO LAST RAM + 1 (I/O AREA)
EB30  FF BE DF                     STX   RAMSIZEH
EB33  BD EA B8                     JSR   SIZEMEM        ;SIZE MEMORY AGAIN TO SHOW TRUE RAM
EB36  39                           RTS                  ;RETURN TO CALLER
                    ;
                    ;
                    ;
                    ;       SUBROUTINE:     INTPIAAB      INITIALIZE PIA AB ACCORDING TO VALUES
                    ;                                     STORED IN SYSTEM RAM (COPIES OF THE
                    ;                                     CONTROL REGISTERS)
                    ;
EB37  CE C0 48      INTPIAAB LDX   #IO+PIAAB        ;POINT TO PIA
EB3A  B6 BE 95             LDAA  CRPIAA         ;GET CONTROL WORD
EB3D  84 FB                ANDA  #0FBH          ;ACCESS DATA DIRECTION REGISTER
EB3F  A7 01                STAA  P.CRA,X
EB41  B6 BE 96             LDAA  CRPIAB
EB44  84 FB                ANDA  #0FBH
EB46  A7 03                STAA  P.CRB,X
EB48  CE FF FF             LDX   #0FFFFH        ;MAKE ALL PIA LINES OUTPUTS
EB4B  FF C0 48             STX   IO+PIAAB+P.DDA
EB4E  FF C0 4A             STX   IO+PIAAB+P.DDB
EB51  CE C0 48             LDX   #IO+PIAAB      ;POINT TO PIA
EB54  B6 BE 95             LDAA  CRPIAA         ;GET CONTROL WORD
```

```
EB57  8A 04                ORAA  #04H          ;ACCESS PREIPHERAL REGISTER
EB59  A7 01                STAA  P.CRA,X
EB5B  B6 BE 96             LDAA  CRPIAB
EB5E  8A 04                ORAA  #04H
EB60  A7 03                STAA  P.CRB,X
EB62  B6 BE BD             LDAA  SONARSLA       ;SELECT A SONAR
EB65  A7 00                STAA  P.PRA,X
EB67  B6 BE BE             LDAA  SONARSLB       ;SELECT A SONAR
EB6A  A7 02                STAA  P.PRB,X
EB6C  39                   RTS                  ;RETURN TO CALLER
                  ;
                  ;
                  ;
                  ;     SUBROUTINE:    INTPIACD      INITIALIZE PIA CD ACCORDING TO VALUES
                  ;                                  STORED IN SYSTEM RAM (COPIES OF THE
                  ;                                  CONTROL REGISTERS)
                  ;
EB6D  CE C0 50    INTPIACD LDX  #IO+PIACD      ;POINT TO PIA
EB70  B6 BE 97             LDAA  CRPIAC         ;GET CONTROL WORD
EB73  84 FB                ANDA  #0FBH          ;ACCESS DATA DIRECTION REGISTER
EB75  A7 01                STAA  P.CRC,X
EB77  B6 BE 98             LDAA  CRPIAD
EB7A  84 FB                ANDA  #0FBH
EB7C  A7 03                STAA  P.CRD,X
EB7E  CE FF FF             LDX   #0FFFFH        ;MAKE ALL PIA LINES OUTPUTS
EB81  FF C0 50             STX   IO+PIACD+P.DDC
EB84  FF C0 52             STX   IO+PIACD+P.DDD
EB87  CE C0 50             LDX   #IO+PIACD      ;POINT TO PIA
EB8A  B6 BE 97             LDAA  CRPIAC         ;GET CONTROL WORD
EB8D  8A 04                ORAA  #04H           ;ACCESS PREIPHERAL REGISTER
EB8F  A7 01                STAA  P.CRC,X
EB91  B6 BE 98             LDAA  CRPIAD
EB94  8A 04                ORAA  #04H
EB96  A7 03                STAA  P.CRD,X
EB98  B6 BE BF             LDAA  SONARSLC       ;SELECT A SONAR
EB9B  A7 00                STAA  P.PRC,X
EB9D  B6 BE C0             LDAA  SONARSLD       ;SELECT A SONAR
EBA0  A7 02                STAA  P.PRD,X
EBA2  39                   RTS                  ;RETURN TO CALLER
                  ;
                  ;
                  ;
                  ;     SUBROUTINE:    INTPTMAB      INITIALIZE PTM AB FROM VALUES STORED
                  ;                                  IN SYSTEM RAM
                  ;
EBA3  CE C0 18    INTPTMAB LDX  #IO+PTMAB      ;POINT TO PTM AB
EBA6  B6 BE 84             LDAA  CRPTMAB2       ;GET CONTROL WORD FOR TIMER 2
EBA9  A7 01                STAA  PTMCR2,X
EBAB  B6 BE 85             LDAA  CRPTMAB3       ;GET CONTROL WORD FOR TIMER 3
EBAE  A7 00                STAA  PTMCR3,X
EBB0  B6 BE 84             LDAA  CRPTMAB2
EBB3  8A 01                ORAA  #01H           ;POINT TO CONTROL REGISTER 1
```

```
EB85  A7 01                STAA  PTMCR2,X
EB87  B6 BE 83             LDAA  CRPTMAB1        ;GET CONTROL WORD FOR TIMER 1
EB8A  A7 00                STAA  PTMCR1,X
EB8C  FE BE 99             LDX   BCPTMAB1        ;GET BINARY PRELOAD VALUE FOR TIMER/COUNTER
EB8F  FF C0 1A             STX   IO+PTMAB+T.LATCH1
EBC2  FE BE 9B             LDX   BCPTMAB2        ;GET BINARY PRELOAD VALUE FOR TIMER/COUNTER
EBC5  FF C0 1C             STX   IO+PTMAB+T.LATCH2
EBC8  FE BE 9D             LDX   BCPTMAB3        ;GET BINARY PRELOAD VALUE FOR TIMER/COUNTER
EBCB  FF C0 1E             STX   IO+PTMAB+T.LATCH3
EBCE  39                   RTS                   ;RETURN TO CALLER
                   ;
                   ;
                   ;
                   ;       SUBROUTINE:    INTPTMCD       INITIALIZE PTM CD FROM VALUES STORED
                   ;                                     IN SYSTEM RAM
                   ;
EBCF  CE C0 20     INTPTMCD LDX   #IO+PTMCD      ;POINT TO PTM CD
EBD2  B6 BE 87             LDAA  CRPTMCD2        ;GET CONTROL WORD FOR TIMER 2
EBD5  A7 01                STAA  PTMCR2,X
EBD7  B6 BE 88             LDAA  CRPTMCD3        ;GET CONTROL WORD FOR TIMER 3
EBDA  A7 00                STAA  PTMCR3,X
EBDC  B6 BE 87             LDAA  CRPTMCD2
EBDF  8A 01                ORAA  #01H            ;POINT TO CONTROL REGISTER 1
EBE1  A7 01                STAA  PTMCR2,X
EBE3  B6 BE 86             LDAA  CRPTMCD1        ;GET CONTROL WORD FOR TIMER 1
EBE6  A7 00                STAA  PTMCR1,X
EBE8  FE BE 9F             LDX   BCPTMCD1        ;GET BINARY PRELOAD VALUE FOR TIMER/COUNTER
EBEB  FF C0 22             STX   IO+PTMCD+T.LATCH1
EBEE  FE BE A1             LDX   BCPTMCD2        ;GET BINARY PRELOAD VALUE FOR TIMER/COUNTER
EBF1  FF C0 24             STX   IO+PTMCD+T.LATCH2
EBF4  FE BE A3             LDX   BCPTMCD3        ;GET BINARY PRELOAD VALUE FOR TIMER/COUNTER
EBF7  FF C0 26             STX   IO+PTMCD+T.LATCH3
EBFA  39                   RTS                   ;RETURN TO CALLER
                   ;
                   ;
                   ;
                   ;       SUBROUTINE:    INTPTMV        INITIALIZE PTM V FROM VALUES STORED
                   ;                                     IN SYSTEM RAM
                   ;
EBFB  CE C0 28     INTPTMV  LDX   #IO+PTMV       ;POINT TO PTM V
EBFE  B6 BE 8A             LDAA  CRPTMV2         ;GET CONTROL WORD FOR TIMER 2
EC01  A7 01                STAA  PTMCR2,X
EC03  B6 BE 8B             LDAA  CRPTMV3         ;GET CONTROL WORD FOR TIMER 3
EC06  A7 00                STAA  PTMCR3,X
EC08  B6 BE 8A             LDAA  CRPTMV2
EC0B  8A 01                ORAA  #01H            ;POINT TO CONTROL REGISTER 1
EC0D  A7 01                STAA  PTMCR2,X
EC0F  B6 BE 89             LDAA  CRPTMV1         ;GET CONTROL WORD FOR TIMER 1
EC12  A7 00                STAA  PTMCR1,X
EC14  FE BE A5             LDX   BCPTMV1         ;GET BINARY PRELOAD VALUE FOR TIMER/COUNTER
EC17  FF C0 2A             STX   IO+PTMV+T.LATCH1
EC1A  FE BE A7             LDX   BCPTMV2         ;GET BINARY PRELOAD VALUE FOR TIMER/COUNTER
```

```
EC1D  FF C0 2C            STX   IO+PTMV+T.LATCH2
EC20  FE BE A9            LDX   BCPTMV3        ;GET BINARY PRELOAD VALUE FOR TIMER/COUNTER
EC23  FF C0 2E            STX   IO+PTMV+T.LATCH3
EC26  39                  RTS                  ;RETURN TO CALLER
                  ;
                  ;
                  ;
                  ;     SUBROUTINE:    INTPTMF        INITIALIZE PTM F FROM VALUES STORED
                  ;                                   IN SYSTEM RAM
                  ;
EC27  CE C0 30    INTPTMF LDX   #IO+PTMF       ;POINT TO PTM F
EC2A  B6 BE 8D            LDAA  CRPTMF2        ;GET CONTROL WORD FOR TIMER 2
EC2D  A7 01               STAA  PTMCR2,X
EC2F  B6 BE 8E            LDAA  CRPTMF3        ;GET CONTROL WORD FOR TIMER 3
EC32  A7 00               STAA  PTMCR3,X
EC34  B6 BE 8D            LDAA  CRPTMF2
EC37  8A 01               ORAA  #01H           ;POINT TO CONTROL REGISTER 1
EC39  A7 01               STAA  PTMCR2,X
EC3B  B6 BE 8C            LDAA  CRPTMF1        ;GET CONTROL WORD FOR TIMER 1
EC3E  A7 04               STAA  PTMCR1,X
EC40  FE BE AB            LDX   BCPTMF1        ;GET BINARY PRELOAD VALUE FOR TIMER/COUNTER
EC43  FF C0 32            STX   IO+PTMF+T.LATCH1
EC46  FE BE AD            LDX   BCPTMF2        ;GET BINARY PRELOAD VALUE FOR TIMER/COUNTER
EC49  FF C0 34            STX   IO+PTMF+T.LATCH2
EC4C  FE BE AF            LDX   BCPTMF3        ;GET BINARY PRELOAD VALUE FOR TIMER/COUNTER
EC4F  FF C0 36            STX   IO+PTMF+T.LATCH3
EC52  39                  RTS                  ;RETURN TO CALLER
                  ;
                  ;
                  ;
                  ;     SUBROUTINE:    INTPTML        INITIALIZE PTM L FROM VALUES STORED
                  ;                                   IN SYSTEM RAM
                  ;
EC53  CE C0 38    INTPTML LDX   #IO+PTML       ;POINT TO PTM L
EC56  B6 BE 90            LDAA  CRPTML2        ;GET CONTROL WORD FOR TIMER 2
EC59  A7 01               STAA  PTMCR2,X
EC5B  B6 BE 91            LDAA  CRPTML3        ;GET CONTROL WORD FOR TIMER 3
EC5E  A7 00               STAA  PTMCR3,X
EC60  B6 BE 90            LDAA  CRPTML2
EC63  8A 01               ORAA  #01H           ;POINT TO CONTROL REGISTER 1
EC65  A7 01               STAA  PTMCR2,X
EC67  B6 BE 8F            LDAA  CRPTML1        ;GET CONTROL WORD FOR TIMER 1
EC6A  A7 00               STAA  PTMCR1,X
EC6C  FE BE B1            LDX   BCPTML1        ;GET BINARY PRELOAD VALUE FOR TIMER/COUNTER
EC6F  FF C0 3A            STX   IO+PTML+T.LATCH1
EC72  FE BE B3            LDX   BCPTML2        ;GET BINARY PRELOAD VALUE FOR TIMER/COUNTER
EC75  FF C0 3C            STX   IO+PTML+T.LATCH2
EC78  FE BE B5            LDX   BCPTML3        ;GET BINARY PRELOAD VALUE FOR TIMER/COUNTER
EC7B  FF C0 3E            STX   IO+PTML+T.LATCH3
EC7E  39                  RTS                  ;RETURN TO CALLER
                  ;
                  ;
```

```
                        ;
                        ;       SUBROUTINE:     INTPTMR         INITIALIZE PTM R FROM VALUES STORED
                        ;                                       IN SYSTEM RAM
                        ;
EC7F    CE C0 40        INTPTMR LDX     #IO+PTMR        ;POINT TO PTM R
EC82    B6 BE 93                LDAA    CRPTMR2         ;GET CONTROL WORD FOR TIMER 2
EC85    A7 01                   STAA    PTMCR2,X
EC87    B6 BE 94                LDAA    CRPTMR3         ;GET CONTROL WORD FOR TIMER 3
EC8A    A7 00                   STAA    PTMCR3,X
EC8C    B6 BE 93                LDAA    CRPTMR2
EC8F    8A 01                   ORAA    #01H            ;POINT TO CONTROL REGISTER 1
EC91    A7 01                   STAA    PTMCR2,X
EC93    B6 BE 92                LDAA    CRPTMR1         ;GET CONTROL WORD FOR TIMER 1
EC96    A7 00                   STAA    PTMCR1,X
EC98    FE BE B7                LDX     BCPTMR1         ;GET BINARY PRELOAD VALUE FOR TIMER/COUNTER
EC9B    FF C0 42                STX     IO+PTMR+T.LATCH1
EC9E    FE BE B9                LDX     BCPTMR2         ;GET BINARY PRELOAD VALUE FOR TIMER/COUNTER
ECA1    FF C0 44                STX     IO+PTMR+T.LATCH2
ECA4    FE BE BB                LDX     BCPTMR3         ;GET BINARY PRELOAD VALUE FOR TIMER/COUNTER
ECA7    FF C0 46                STX     IO+PTMR+T.LATCH3
ECAA    39                      RTS                     ;RETURN TO CALLER
                        ;
                        ;
                        ;
                        ;       SUBROUTINE:     INTACIAT        INITIALIZE ACIAT FROM VALUES STORED
                        ;                                       IN SYSTEM RAM
                        ;
ECAB    CE C0 00        INTACIAT LDX    #IO+ACIAT       ;POINT TO ACIA T
ECAE    86 03                   LDAA    #003H
ECB0    A7 00                   STAA    ACIACR,X        ;RESET THE ACIA
ECB2    B6 BE 80                LDAA    CRACIAT         ;GET CONTROL WORD FOR ACIA T
ECB5    A7 00                   STAA    ACIACR,X
ECB7    A6 01                   LDAA    ACIARX,X        ;THROW AWAY ANY TRASH ON RECEIVE LINE
ECB9    39                      RTS                     ;RETURN TO CALLER
                        ;
                        ;
                        ;
                        ;       SUBROUTINE:     INTACIAX        INITIALIZE ACIAX FROM VALUES STORED
                        ;                                       IN SYSTEM RAM
                        ;
ECBA    CE C0 08        INTACIAX LDX    #IO+ACIAX       ;POINT TO ACIA X
ECBD    86 03                   LDAA    #003H
ECBF    A7 00                   STAA    ACIACR,X        ;RESET THE ACIA
ECC1    B6 BE 81                LDAA    CRACIAX         ;GET CONTROL WORD FOR ACIA X
ECC4    A7 00                   STAA    ACIACR,X
ECC6    A6 01                   LDAA    ACIARX,X        ;THROW AWAY ANY TRASH ON RECEIVE LINE
ECC8    39                      RTS                     ;RETURN TO CALLER
                        ;
                        ;
                        ;
                        ;       SUBROUTINE:     INTACIAL        INITIALIZE ACIAL FROM VALUES STORED
                        ;                                       IN SYSTEM RAM
```

```
                        ;
ECC9   CE C0 10         INTACIAL LDX   @IO+ACIAL      ;POINT TO ACIA L
ECCC   86 03                     LDAA  #003H
ECCE   A7 00                     STAA  ACIACR,X      ;RESET THE ACIA
ECD0   B6 BE 82                  LDAA  CRACIAL       ;GET CONTROL WORD FOR ACIA L
ECD3   A7 00                     STAA  ACIACR,X
ECD5   A6 01                     LDAA  ACIARX,X      ;THROW AWAY ANY TRASH ON RECEIVE LINE
ECD7   39                        RTS                 ;RETURN TO CALLER
                        ;
                        ;
                        ;
                        ;
ECD8   BD EB 37         INITPIA  JSR   INTPIAAB
ECDB   BD EB 6D                  JSR   INTPIACD
ECDE   39                        RTS
                        ;
                        ;
ECDF   BD EB A3         INITPTM  JSR   INTPTMAB
ECE2   BD EB CF                  JSR   INTPTMCD
ECE5   BD EB FB                  JSR   INTPTMV
ECE8   BD EC 27                  JSR   INTPTMF
ECEB   BD EC 53                  JSR   INTPTML
ECEE   BD EC 7F                  JSR   INTPTMR
ECF1   39                        RTS
                        ;
                        ;
ECF2   BD EC AB         INITACIA JSR   INTACIAT
ECF5   BD EC BA                  JSR   INTACIAX
ECF8   BD EC C9                  JSR   INTACIAL
ECFB   39                        RTS
                        ;
                        ;
                        ;
                        ;       MAIN INITIALIZATION ROUTINE ON POWER UP
                        ;
                        ;
ECFC   0F               INIT     SEI                 ;MASK INTERRUPTS
ECFD   8E BE 7F                  LDS   #BOS          ;INITIALIZE STACK POINTER FOR SYSTEM
ED00   4F                        CLRA
ED01   43                        COMA
ED02   B7 BE EE                  STAA  INTMASK       ;INTERRUPTS NOT ALLOWED UNTIL INITIALIZATION
ED05   7F BE DC                  CLR   POWERUP       ;AND POWER UP COMPLETE
ED08   CE BF CA                  LDX   #ADR          ;SET UP BLOCK MOVE
ED0B   8E BF EF                  LDS   #PREG         ;(DESTINATION) TO INITIALIZE USER REGISTERS
ED0E   AF 00                     STS   0,X           ;AND SYSTEM VECTORS
ED10   8E F1 AB                  LDS   #BLOCK1       ;POINT TO START OF BLOCK DATA
ED13   AF 02                     STS   2,X
ED15   8E F1 BC                  LDS   #BLOCK2       ;END OF BLOCK
ED18   AF 04                     STS   4,X
ED1A   8E BE 7F                  LDS   #BOS          ;RESET STACK POINTER TO SYSTEM STACK
ED1D   BD E6 46                  JSR   MOVE1         ;DO BLOCK MOVE
ED20   CE BF CA                  LDX   #ADR          ;SET UP BLOCK MOVE
```

```
ED23  8E BE 80              LDS   #CRACIAT      ;(DESTINATION) IO INITIALIZATION PARAMETERS
ED26  AF 00                 STS   0,X
ED28  8E F1 BC              LDS   #BLOCK2       ;POINT TO START OF BLOCK DATA
ED2B  AF 02                 STS   2,X
ED2D  8E F2 4A              LDS   #BLOCK3       ;END OF BLOCK
ED30  AF 04                 STS   4,X
ED32  8E BE 7F              LDS   #BOS          ;RESET STACK POINTER TO SYSTEM STACK
ED35  BD E6 46              JSR   MOVE1         ;DO BLOCK MOVE
ED38  8E BE 7F              LDS   #BOS          ;RESET STACK POINTER TO SYSTEM STACK
ED38  BD EC D8       INIT2  JSR   INITPIA       ;INITIALIZE PIA'S
ED3E  8E BE 7F              LDS   #BOS          ;RESET STACK POINTER TO SYSTEM STACK
ED41  BD EC DF              JSR   INITPTM       ;INITIALIZE PTM'S
ED44  8E BE 7F              LDS   #BOS          ;RESET STACK POINTER TO SYSTEM STACK
ED47  BD EC F2              JSR   INITACIA      ;INITIALIZE ACIA'S
ED4A  8E BE 7F              LDS   #BOS          ;RESET STACK POINTER TO SYSTEM STACK
ED4D  BD EB 0A              JSR   ROMLAYRAM     ;SIZE MEMORY AND OVERLAY ROM TO RAM
ED50  8E BE 7F              LDS   #BOS          ;RESET STACK POINTER TO SYSTEM STACK
ED53  C6 55                 LDAB  #055H         ;POWER UP IS COMPLETE
ED55  F7 BE DC              STAB  POWERUP
ED58  7F BE EE       DONEPOWUP CLR  INTMASK     ;NO INTERRUPT MASK REQUIRED NOW SO
ED5B  0E                    CLI                 ;CLEAR INTERRUPT MASK
ED5C  7E E1 EF              JMP   START         ;GO TO PROTO PORTION OF OPERATING SYSTEM
                     ;
                     ;
                     ;
                     ;
                     ;
                     ;      SUBROUTINE:    SONPRINT
                     ;
                     ;              ON ENTRY THE A REGISTER HAS THE VALUE TO PRINT AS A
                     ;              NUMBER FROM 0 TO 25.5
                     ;              THE X REGISTER POINTS TO THE ADDRESS WHERE 4 ASCII BYTES
                     ;              WILL BE PLACED AS A DECIMAL REPRESENTATION OF THE VALUE
                     ;              IN THE A REGISTER.     ACTUAL PRINTING IS PERFORMED BY
                     ;              SOME OTHER ROUTINE.
                     ;
                     ;
ED5F  FF BF 7E       SONPRINT STX  LSXTEMP      ;SAVE POINTER TO PRINT BUFFER
ED62  CE ED AB              LDX   #LOOKSON      ;GET STARTING ADDRESS OF LOOKUP TABLE
ED65  FF BF 7C              STX   LKSONTMP      ;SAVE IT IN A WORKING TEMP REGISTER
ED68  48                    ASLA                ;IF VALUE OF A REGISTER IS ABOVE 127
ED69  25 28                 BCS   SPA128        ;ADD 512 TO LOOKUP POINTER ELSE
ED6B  48             SP1    ASLA                ;IF VALUE OF A REGISTER WAS ABOVE 64
ED6C  25 31                 BCS   SPA64         ;ADD 256 TO LOOKUP POINTER ELSE
ED6E  5F             SP2    CLRB                ;ADD REMAINING VALUE OF A REGISTER TO
ED6F  BB BF 7D              ADDA  LKSONTMP+1    ;LOOKUP POINTER
ED72  B7 BF 7D              STAA  LKSONTMP+1
ED75  F9 BF 7C              ADCB  LKSONTMP      ;LOOKUP POINTER NOW POINTS 4*A BYTES
ED78  F7 BF 7C              STAB  LKSONTMP      ;INTO THE LOOKUP TABLE
ED7B  C6 04                 LDAB  #04H          ;SET UP TO TRANSFER TO PRINT BUFFER
ED7D  FE BF 7C       SP3    LDX   LKSONTMP      ;FOUR ASCII BYTES
ED80  A6 00                 LDAA  0,X           ;GET A BYTE
```

```
ED82  08                    INX                 ;POINT TO NEXT BYTE IN TABLE
ED83  FF BF 7C              STX   LKSONTMP      ;SAVE TABLE POINTER
ED86  FE BF 7E              LDX   LSXTEMP       ;GET PRINT BUFFER POINTER
ED89  A7 00                 STAA  0,X           ;PUT ASCII CHARACTER INTO PRINT BUFFER
ED8B  08                    INX                 ;POINT TO NEXT POSITION OF PRINT BUFFER
ED8C  FF BF 7E              STX   LSXTEMP       ;SAVE PRINT BUFFER POINTER
ED8F  5A                    DECB                ;ONE LESS BYTE TO GO
ED90  26 EB                 BNE   SP3           ;LOOP BACK IF NOT THRU WITH FOUR BYTES
ED92  39                    RTS                 ;ELSE RETURN TO CALLER
ED93  36            SPA128  PSHA                ;SAVE VALUE TO BE PRINTED
ED94  86 02                 LDAA  #02H          ;ADD 512 TO INDEX POINTING INTO THE PRINT TABLE
ED96  BB BF 7C              ADDA  LKSONTMP
ED99  B7 BF 7C              STAA  LKSONTMP      ;SAVE THE POINTER
ED9C  32                    PULA                ;RESTORE VALUE TO BE PRINTED
ED9D  20 CC                 BRA   SPI           ;CONTINUE FINDING INDEX INTO PRINT TABLE
ED9F  36            SPA64   PSHA                ;SAVE VALUE TO BE PRINTED
EDA0  86 01                 LDAA  #01H          ;ADD 256 TO INDEX POINTING INTO THE PRINT TABLE
EDA2  BB BF 7C              ADDA  LKSONTMP
EDA5  B7 BF 7C              STAA  LKSONTMP
EDA8  32                    PULA                ;RESTORE VALUE TO BE PRINTED
EDA9  20 C3                 BRA   SP2           ;CONTINUE FINDING INDEX INTO PRINT TABLE
                    ;
                    ;
EDAB  20 30 20 20   LOOKSON FCC   ' 0 '         ;SONAR HEX TO ASCII DECIMAL LOOKUP TABLE
EDAF  20 30 2E 31           FCC   ' 0.1'
EDB3  20 30 2E 32           FCC   ' 0.2'
EDB7  20 30 2E 33           FCC   ' 0.3'
EDBB  20 30 2E 34           FCC   ' 0.4'
EDBF  20 30 2E 35           FCC   ' 0.5'
EDC3  20 30 2E 36           FCC   ' 0.6'
EDC7  20 30 2E 37           FCC   ' 0.7'
EDCB  20 30 2E 38           FCC   ' 0.8'
EDCF  20 30 2E 39           FCC   ' 0.9'
EDD3  20 31 2E 30           FCC   ' 1.0'
EDD7  20 31 2E 31           FCC   ' 1.1'
EDDB  20 31 2E 32           FCC   ' 1.2'
EDDF  20 31 2E 33           FCC   ' 1.3'
EDE3  20 31 2E 34           FCC   ' 1.4'
EDE7  20 31 2E 35           FCC   ' 1.5'
EDEB  20 31 2E 36           FCC   ' 1.6'
EDEF  20 31 2E 37           FCC   ' 1.7'
EDF3  20 31 2E 38           FCC   ' 1.8'
EDF7  20 31 2E 39           FCC   ' 1.9'
EDFB  20 32 2E 30           FCC   ' 2.0'
EDFF  20 32 2E 31           FCC   ' 2.1'
EE03  20 32 2E 32           FCC   ' 2.2'
EE07  20 32 2E 33           FCC   ' 2.3'
EE0B  20 32 2E 34           FCC   ' 2.4'
EE0F  20 32 2E 35           FCC   ' 2.5'
EE13  20 32 2E 36           FCC   ' 2.6'
EE17  20 32 2E 37           FCC   ' 2.7'
EE1B  20 32 2E 38           FCC   ' 2.8'
```

EE1F	20 32 2E 39	FCC	' 2.9'
EE23	20 33 2E 30	FCC	' 3.0'
EE27	20 33 2E 31	FCC	' 3.1'
EE2B	20 33 2E 32	FCC	' 3.2'
EE2F	20 33 2E 33	FCC	' 3.3'
EE33	20 33 2E 34	FCC	' 3.4'
EE37	20 33 2E 35	FCC	' 3.5'
EE3B	20 33 2E 36	FCC	' 3.6'
EE3F	20 33 2E 37	FCC	' 3.7'
EE43	20 33 2E 38	FCC	' 3.8'
EE47	20 33 2E 39	FCC	' 3.9'
EE4B	20 34 2E 30	FCC	' 4.0'
EE4F	20 34 2E 31	FCC	' 4.1'
EE53	20 34 2E 32	FCC	' 4.2'
EE57	20 34 2E 33	FCC	' 4.3'
EE5B	20 34 2E 34	FCC	' 4.4'
EE5F	20 34 2E 35	FCC	' 4.5'
EE63	20 34 2E 36	FCC	' 4.6'
EE67	20 34 2E 37	FCC	' 4.7'
EE6B	20 34 2E 38	FCC	' 4.8'
EE6F	20 34 2E 39	FCC	' 4.9'
EE73	20 35 2E 30	FCC	' 5.0'
EE77	20 35 2E 31	FCC	' 5.1'
EE7B	20 35 2E 32	FCC	' 5.2'
EE7F	20 35 2E 33	FCC	' 5.3'
EE83	20 35 2E 34	FCC	' 5.4'
EE87	20 35 2E 35	FCC	' 5.5'
EE8B	20 35 2E 36	FCC	' 5.6'
EE8F	20 35 2E 37	FCC	' 5.7'
EE93	20 35 2E 38	FCC	' 5.8'
EE97	20 35 2E 39	FCC	' 5.9'
EE9B	20 36 2E 30	FCC	' 6.0'
EE9F	20 36 2E 31	FCC	' 6.1'
EEA3	20 36 2E 32	FCC	' 6.2'
EEA7	20 36 2E 33	FCC	' 6.3'
EEAB	20 36 2E 34	FCC	' 6.4'
EEAF	20 36 2E 35	FCC	' 6.5'
EEB3	20 36 2E 36	FCC	' 6.6'
EEB7	20 36 2E 37	FCC	' 6.7'
EEBB	20 36 2E 38	FCC	' 6.8'
EEBF	20 36 2E 39	FCC	' 6.9'
EEC3	20 37 2E 30	FCC	' 7.0'
EEC7	20 37 2E 31	FCC	' 7.1'
EECB	20 37 2E 32	FCC	' 7.2'
EECF	20 37 2E 33	FCC	' 7.3'
EED3	20 37 2E 34	FCC	' 7.4'
EED7	20 37 2E 35	FCC	' 7.5'
EEDB	20 37 2E 36	FCC	' 7.6'
EEDF	20 37 2E 37	FCC	' 7.7'
EEE3	20 37 2E 38	FCC	' 7.8'
EEE7	20 37 2E 39	FCC	' 7.9'
EEEB	20 38 2E 30	FCC	' 8.0'

EEEF	20 38 2E 31	FCC	' 8.1'
EEF3	20 38 2E 32	FCC	' 8.2'
EEF7	20 38 2E 33	FCC	' 8.3'
EEFB	20 38 2E 34	FCC	' 8.4'
EEFF	20 38 2E 35	FCC	' 8.5'
EF03	20 38 2E 36	FCC	' 8.6'
EF07	20 38 2E 37	FCC	' 8.7'
EF0B	20 38 2E 38	FCC	' 8.8'
EF0F	20 38 2E 39	FCC	' 8.9'
EF13	20 39 2E 30	FCC	' 9.0'
EF17	20 39 2E 31	FCC	' 9.1'
EF1B	20 39 2E 32	FCC	' 9.2'
EF1F	20 39 2E 33	FCC	' 9.3'
EF23	20 39 2E 34	FCC	' 9.4'
EF27	20 39 2E 35	FCC	' 9.5'
EF2B	20 39 2E 36	FCC	' 9.6'
EF2F	20 39 2E 37	FCC	' 9.7'
EF33	20 39 2E 38	FCC	' 9.8'
EF37	20 39 2E 39	FCC	' 9.9'
EF3B	31 30 2E 30	FCC	'10.0'
EF3F	31 30 2E 31	FCC	'10.1'
EF43	31 30 2E 32	FCC	'10.2'
EF47	31 30 2E 33	FCC	'10.3'
EF4B	31 30 2E 34	FCC	'10.4'
EF4F	31 30 2E 35	FCC	'10.5'
EF53	31 30 2E 36	FCC	'10.6'
EF57	31 30 2E 37	FCC	'10.7'
EF5B	31 30 2E 38	FCC	'10.8'
EF5F	31 30 2E 39	FCC	'10.9'
EF63	31 31 2E 30	FCC	'11.0'
EF67	31 31 2E 31	FCC	'11.1'
EF6B	31 31 2E 32	FCC	'11.2'
EF6F	31 31 2E 33	FCC	'11.3'
EF73	31 31 2E 34	FCC	'11.4'
EF77	31 31 2E 35	FCC	'11.5'
EF7B	31 31 2E 36	FCC	'11.6'
EF7F	31 31 2E 37	FCC	'11.7'
EF83	31 31 2E 38	FCC	'11.8'
EF87	31 31 2E 39	FCC	'11.9'
EF8B	31 32 2E 30	FCC	'12.0'
EF8F	31 32 2E 31	FCC	'12.1'
EF93	31 32 2E 32	FCC	'12.2'
EF97	31 32 2E 33	FCC	'12.3'
EF9B	31 32 2E 34	FCC	'12.4'
EF9F	31 32 2E 35	FCC	'12.5'
EFA3	31 32 2E 36	FCC	'12.6'
EFA7	31 32 2E 37	FCC	'12.7'
EFAB	31 32 2E 38	FCC	'12.8'
EFAF	31 32 2E 39	FCC	'12.9'
EFB3	31 33 2E 30	FCC	'13.0'
EFB7	31 33 2E 31	FCC	'13.1'
EFBB	31 33 2E 32	FCC	'13.2'

EFBF	31 33 2E 33	FCC	'13.3'
EFC3	31 33 2E 34	FCC	'13.4'
EFC7	31 33 2E 35	FCC	'13.5'
EFCB	31 33 2E 36	FCC	'13.6'
EFCF	31 33 2E 37	FCC	'13.7'
EFD3	31 33 2E 38	FCC	'13.8'
EFD7	31 33 2E 39	FCC	'13.9'
EFDB	31 34 2E 30	FCC	'14.0'
EFDF	31 34 2E 31	FCC	'14.1'
EFE3	31 34 2E 32	FCC	'14.2'
EFE7	31 34 2E 33	FCC	'14.3'
EFEB	31 34 2E 34	FCC	'14.4'
EFEF	31 34 2E 35	FCC	'14.5'
EFF3	31 34 2E 36	FCC	'14.6'
EFF7	31 34 2E 37	FCC	'14.7'
EFFB	31 34 2E 38	FCC	'14.8'
EFFF	31 34 2E 39	FCC	'14.9'
F003	31 35 2E 30	FCC	'15.0'
F007	31 35 2E 31	FCC	'15.1'
F00B	31 35 2E 32	FCC	'15.2'
F00F	31 35 2E 33	FCC	'15.3'
F013	31 35 2E 34	FCC	'15.4'
F017	31 35 2E 35	FCC	'15.5'
F01B	31 35 2E 36	FCC	'15.6'
F01F	31 35 2E 37	FCC	'15.7'
F023	31 35 2E 38	FCC	'15.8'
F027	31 35 2E 39	FCC	'15.9'
F02B	31 36 2E 30	FCC	'16.0'
F02F	31 36 2E 31	FCC	'16.1'
F033	31 36 2E 32	FCC	'16.2'
F037	31 36 2E 33	FCC	'16.3'
F03B	31 36 2E 34	FCC	'16.4'
F03F	31 36 2E 35	FCC	'16.5'
F043	31 36 2E 36	FCC	'16.6'
F047	31 36 2E 37	FCC	'16.7'
F04B	31 36 2E 38	FCC	'16.8'
F04F	31 36 2E 39	FCC	'16.9'
F053	31 37 2E 30	FCC	'17.0'
F057	31 37 2E 31	FCC	'17.1'
F05B	31 37 2E 32	FCC	'17.2'
F05F	31 37 2E 33	FCC	'17.3'
F063	31 37 2E 34	FCC	'17.4'
F067	31 37 2E 35	FCC	'17.5'
F06B	31 37 2E 36	FCC	'17.6'
F06F	31 37 2E 37	FCC	'17.7'
F073	31 37 2E 38	FCC	'17.8'
F077	31 37 2E 39	FCC	'17.9'
F07B	31 38 2E 30	FCC	'18.0'
F07F	31 38 2E 31	FCC	'18.1'
F083	31 38 2E 32	FCC	'18.2'
F087	31 38 2E 33	FCC	'18.3'
F08B	31 38 2E 34	FCC	'18.4'

F06F	31 38 2E 35	FCC	'18.5'
F093	31 38 2E 36	FCC	'18.6'
F097	31 38 2E 37	FCC	'18.7'
F09B	31 38 2E 38	FCC	'18.8'
F09F	31 38 2E 39	FCC	'18.9'
F0A3	31 39 2E 30	FCC	'19.0'
F0A7	31 39 2E 31	FCC	'19.1'
F0AB	31 39 2E 32	FCC	'19.2'
F0AF	31 39 2E 33	FCC	'19.3'
F0B3	31 39 2E 34	FCC	'19.4'
F0B7	31 39 2E 35	FCC	'19.5'
F0BB	31 39 2E 36	FCC	'19.6'
F0BF	31 39 2E 37	FCC	'19.7'
F0C3	31 39 2E 38	FCC	'19.8'
F0C7	31 39 2E 39	FCC	'19.9'
F0CB	32 30 2E 30	FCC	'20.0'
F0CF	32 30 2E 31	FCC	'20.1'
F0D3	32 30 2E 32	FCC	'20.2'
F0D7	32 30 2E 33	FCC	'20.3'
F0DB	32 30 2E 34	FCC	'20.4'
F0DF	32 30 2E 35	FCC	'20.5'
F0E3	32 30 2E 36	FCC	'20.6'
F0E7	32 30 2E 37	FCC	'20.7'
F0EB	32 30 2E 38	FCC	'20.8'
F0EF	32 30 2E 39	FCC	'20.9'
F0F3	32 31 2E 30	FCC	'21.0'
F0F7	32 31 2E 31	FCC	'21.1'
F0FB	32 31 2E 32	FCC	'21.2'
F0FF	32 31 2E 33	FCC	'21.3'
F103	32 31 2E 34	FCC	'21.4'
F107	32 31 2E 35	FCC	'21.5'
F10B	32 31 2E 36	FCC	'21.6'
F10F	32 31 2E 37	FCC	'21.7'
F113	32 31 2E 38	FCC	'21.8'
F117	32 31 2E 39	FCC	'21.9'
F11B	32 32 2E 30	FCC	'22.0'
F11F	32 32 2E 31	FCC	'22.1'
F123	32 32 2E 32	FCC	'22.2'
F127	32 32 2E 33	FCC	'22.3'
F12B	32 32 2E 34	FCC	'22.4'
F12F	32 32 2E 35	FCC	'22.5'
F133	32 32 2E 36	FCC	'22.6'
F137	32 32 2E 37	FCC	'22.7'
F13B	32 32 2E 38	FCC	'22.8'
F13F	32 32 2E 39	FCC	'22.9'
F143	32 33 2E 30	FCC	'23.0'
F147	32 33 2E 31	FCC	'23.1'
F14B	32 33 2E 32	FCC	'23.2'
F14F	32 33 2E 33	FCC	'23.3'
F153	32 33 2E 34	FCC	'23.4'
F157	32 33 2E 35	FCC	'23.5'
F15B	32 33 2E 36	FCC	'23.6'

```
F15F   32 33 2E 37          FCC    '23.7'
F163   32 33 2E 38          FCC    '23.8'
F167   32 33 2E 39          FCC    '23.9'
F16B   32 34 2E 30          FCC    '24.0'
F16F   32 34 2E 31          FCC    '24.1'
F173   32 34 2E 32          FCC    '24.2'
F177   32 34 2E 33          FCC    '24.3'
F17B   32 34 2E 34          FCC    '24.4'
F17F   32 34 2E 35          FCC    '24.5'
F183   32 34 2E 36          FCC    '24.6'
F187   32 34 2E 37          FCC    '24.7'
F18B   32 34 2E 38          FCC    '24.8'
F18F   32 34 2E 39          FCC    '24.9'
F193   32 35 2E 30          FCC    '25.0'
F197   32 35 2E 31          FCC    '25.1'
F19B   32 35 2E 32          FCC    '25.2'
F19F   32 35 2E 33          FCC    '25.3'
F1A3   32 35 2E 34          FCC    '25.4'
F1A7   32 35 2E 35          FCC    '25.5'
                      ;
                      ;
                      ;
                      ;
                      ;     BLOCKS FOR INCLUSION WITH MARRS-1 OPERATING SYSTEM ROM
                      ;
                      ;
F1AB   E1 EF          BLOCK1  FDB START
F1AD   BE 00                  FDB USRSTAK
F1AF   E2 A8                  FDB SWI30
F1B1   E1 FB                  FDB ACIAA
F1B3   7E                     FCB 07EH
F1B4   E9 04                  FDB TICHAN
F1B6   7E                     FCB 07EH
F1B7   E2 95                  FDB SWIHAN
F1B9   7E                     FCB 07EH
F1BA   E1 F8                  FDB BREAK
                      ;
                      ;
F1BC   15             BLOCK2  FCB 15H       ;COPY OF CONTROL REGISTER BYTE FOR ACIAT
F1BD   15                     FCB 15H       ;COPY OF CONTROL REGISTER BYTE FOR ACIAX
F1BE   15                     FCB 15H       ;COPY OF CONTROL REGISTER BYTE FOR ACIAL
                      ;
                      ;
F1BF   00                     FCB 0H        ;COPY OF CONTROL REGISTER BYTE FOR PTMAB1
F1C0   00                     FCB 0H        ;COPY OF CONTROL REGISTER BYTE FOR PTMAB2
F1C1   80                     FCB 080H      ;COPY OF CONTROL REGISTER BYTE FOR PTMAB3
F1C2   00                     FCB 0H        ;COPY OF CONTROL REGISTER BYTE FOR PTMCD1
F1C3   00                     FCB 0H        ;COPY OF CONTROL REGISTER BYTE FOR PTMCD2
F1C4   00                     FCB 0H        ;COPY OF CONTROL REGISTER BYTE FOR PTMCD3
F1C5   80                     FCB 080H      ;COPY OF CONTROL REGISTER BYTE FOR PTMV1
F1C6   80                     FCB 080H      ;COPY OF CONTROL REGISTER BYTE FOR PTMV2
F1C7   00                     FCB 0H        ;COPY OF CONTROL REGISTER BYTE FOR PTMV3
```

```
F1C8  40          FCB 040H     ;COPY OF CONTROL REGISTER BYTE FOR PTMF1
F1C9  40          FCB 040H     ;COPY OF CONTROL REGISTER BYTE FOR PTMF2
F1CA  00          FCB 0H       ;COPY OF CONTROL REGISTER BYTE FOR PTMF3
F1CB  40          FCB 040H     ;COPY OF CONTROL REGISTER BYTE FOR PTML1
F1CC  40          FCB 040H     ;COPY OF CONTROL REGISTER BYTE FOR PTML2
F1CD  00          FCB 0H       ;COPY OF CONTROL REGISTER BYTE FOR PTML3
F1CE  40          FCB 040H     ;COPY OF CONTROL REGISTER BYTE FOR PTMR1
F1CF  40          FCB 040H     ;COPY OF CONTROL REGISTER BYTE FOR PTMR2
F1D0  00          FCB 0H       ;COPY OF CONTROL REGISTER BYTE FOR PTMR3
                  ;
                  ;
F1D1  F5          FCB 0F5H     ;COPY OF CONTROL REGISTER BYTE FOR PIAA
F1D2  04          FCB 04H      ;COPY OF CONTROL REGISTER BYTE FOR PIAB
F1D3  04          FCB 04H      ;COPY OF CONTROL REGISTER BYTE FOR PIAC
F1D4  04          FCB 04H      ;COPY OF CONTROL REGISTER BYTE FOR PIAD
                  ;
                  ;
F1D5  FF F6       FDB 0FFF6H   ;BINARY COUNT PRELOAD FOR PTMAB1
F1D7  FF F6       FDB 0FFF6H   ;BINARY COUNT PRELOAD FOR PTMAB2
F1D9  00 24       FDB 00024H   ;BINARY COUNT PRELOAD FOR PTMAB3
F1DB  FF F6       FDB 0FFF6H   ;BINARY COUNT PRELOAD FOR PTMCD1
F1DD  FF F6       FDB 0FFF6H   ;BINARY COUNT PRELOAD FOR PTMCD2
F1DF  FF FF       FDB 0FFFFH   ;BINARY COUNT PRELOAD FOR PTMCD3
F1E1  52 07       FDB 05207H   ;BINARY COUNT PRELOAD FOR PTMV1
F1E3  52 07       FDB 05207H   ;BINARY COUNT PRELOAD FOR PTMV2
F1E5  FF FF       FDB 0FFFFH   ;BINARY COUNT PRELOAD FOR PTMV3
F1E7  00 03       FDB 00003H   ;BINARY COUNT PRELOAD FOR PTMF1
F1E9  00 03       FDB 00003H   ;BINARY COUNT PRELOAD FOR PTMF2
F1EB  FF FF       FDB 0FFFFH   ;BINARY COUNT PRELOAD FOR PTMF3
F1ED  00 3F       FDB 0003FH   ;BINARY COUNT PRELOAD FOR PTML1
F1EF  00 3F       FDB 0003FH   ;BINARY COUNT PRELOAD FOR PTML2
F1F1  FF FF       FDB 0FFFFH   ;BINARY COUNT PRELOAD FOR PTML3
F1F3  00 3F       FDB 0003FH   ;BINARY COUNT PRELOAD FOR PTMR1
F1F5  00 3F       FDB 0003FH   ;BINARY COUNT PRELOAD FOR PTMR2
F1F7  FF FF       FDB 0FFFFH   ;BINARY COUNT PRELOAD FOR PTMR3
                  ;
                  ;
F1F9  01          FCB 01H      ;SONAR SELECT BYTE WRITTEN TO PIA A
F1FA  01          FCB 01H      ;SONAR SELECT BYTE WRITTEN TO PIA B
F1FB  01          FCB 01H      ;SONAR SELECT BYTE WRITTEN TO PIA C
F1FC  01          FCB 01H      ;SONAR SELECT BYTE WRITTEN TO PIA D
                  ;
                  ;
F1FD  12          FCB 012H     ;LAST SONAR A READING
F1FE  12          FCB 012H     ;LAST SONAR B READING
F1FF  12          FCB 012H     ;LAST SONAR C READING
F200  12          FCB 012H     ;LAST SONAR D READING
                  ;
                  ;
F201  00 00       FDB 0000H          ;TIC TIME OF LAST SONAR READING
                  ;
F203  39          FCB 039H           ;JUMP VECTOR FOR EXTENDED TIC INTERRUPT
```

```
                                                ;ROUTINE (PRESENTLY SET TO RTS)
F204  01 01                 FDB 0010IH
                    ;
F206  00                    FCB 000H            ;TIME ZERO FROM DRIVE COMPUTER (15 BCD LS NIBBLES)
F207  00                    FCB 000H
F208  00                    FCB 000H
F209  00                    FCB 000H
F20A  02                    FCB 002H
F20B  0A                    FCB 00AH
F20C  05                    FCB 005H
F20D  04                    FCB 004H
F20E  01                    FCB 001H
F20F  02                    FCB 002H
F210  01                    FCB 001H
F211  04                    FCB 004H
F212  08                    FCB 008H
F213  09                    FCB 009H
F214  01                    FCB 001H
                    ;
F215  00 00                 FDB 00000H          ;ONE TENTH SECOND TIC TIME COUNT SINCE TIME ZERO
                    ;
F217  48                    FCB 048H            ;OFFSET INTO I/O AREA FOR PORT INITIALIZATION
                    ;
F218  00                    FCB 000H            ;POWERUP NOT COMPLETE
                    ;
F219  00 00                 FDB 00000H          ;START OF RAM
F21B  C8 00                 FDB IO              ;END OF RAM + 1 (I/O AREA)
F21D  55                    FCB 055H            ;CHANGE SELECTED SONARS IF 00 ELSE INTERRUPT
                                                ;HANDLER SETS THIS BYTE TO 055H
F21E  01                    FCB 001H            ;NEXT SONAR SELECT BYTE WRITTEN TO PIA A
F21F  01                    FCB 001H            ;NEXT SONAR SELECT BYTE WRITTEN TO PIA B
F220  01                    FCB 001H            ;NEXT SONAR SELECT BYTE WRITTEN TO PIA C
F221  01                    FCB 001H            ;NEXT SONAR SELECT BYTE WRITTEN TO PIA D
F222  00 00                 FDB   0       ;TICTEMP0 TEMPORARY REGISTER FOR TIC INTERRUPT
F224  00 00                 FDB   0       ;TICTEMP1 TEMPORARY REGISTER FOR TIC INTERRUPT
F226  00 00                 FDB   0       ;TICTEMP2 TEMPORARY REGISTER FOR TIC INTERRUPT
F228  00 00                 FDB   0       ;TICTEMP3 TEMPORARY REGISTER FOR TIC INTERRUPT
F22A  FF                    FCB   0FFH    ;INTMASK INTERRUPTS MASKED IF $FF ELSE NOT MASKED IF $00
F22B  00                    FCB   0       ;SONDATSA SONAR SELECT BYTE FROM READSONAR ROUTINE
F22C  00                    FCB   0       ;SONDATRA SONAR READING FROM READSONAR ROUTINE
F22D  00                    FCB   0       ;SONDATSB SONAR SELECT BYTE FROM READSONAR ROUTINE
F22E  00                    FCB   0       ;SONDATRB SONAR READING FROM READSONAR ROUTINE
F22F  00                    FCB   0       ;SONDATSC SONAR SELECT BYTE FROM READSONAR ROUTINE
F230  00                    FCB   0       ;SONDATRC SONAR READING FROM READSONAR ROUTINE
F231  00                    FCB   0       ;SONDATSD SONAR SELECT BYTE FROM READSONAR ROUTINE
F232  00                    FCB   0       ;SONDATRD SONAR READING FROM READSONAR ROUTINE
F233  00 49                 FDB   0049H   ;FWCOUNT FRONT WHEEL ABSOLUTE COUNT FOR STRAIGHT AHEAD
F235  00 00                 FDB   0       ;RWCOUNT1 RIGHT WHEEL PTM COUNTER 1 COUNTS
F237  00 00                 FDB   0       ;RWCOUNT2 RIGHT WHEEL PTM COUNTER 2 COUNTS
F239  00 00                 FDB   0       ;LWCOUNT1 LEFT  WHEEL PTM COUNTER 1 COUNTS
F23B  00 00                 FDB   0       ;LWCOUNT2 LEFT  WHEEL PTM COUNTER 2 COUNTS
F23D  00                    FCB   0       ;RWMOD1  RIGHT WHEEL PTM 1 MODULO COUNT
```

```
F23E  00                  FCB   0       ;RWMOD2  RIGHT WHEEL PTM 2 MODULO COUNT
F23F  00                  FCB   0       ;LWMOD1  LEFT  WHEEL PTM 1 MODULO COUNT
F240  00                  FCB   0       ;LWMOD2  LEFT  WHEEL PTM 2 MODULO COUNT
F241  7E                  FCB   07EH
F242  01 00               FDB   00100H  ;JUMP VECTOR FOR C (COLD START) COMMAND
F244  7E                  FCB   07EH
F245  01 03               FDB   00103H  ;JUMP VECTOR FOR W (WARM START) COMMAND
F247  7E                  FCB   07EH
F248  20 01               FDB   02001H  ;JUMP VECTOR FOR O (ODESSEY) COMMAND
F24A  01          BLOCK3  NOP                   ;MARK END OF BLOCK 2
                  ;
                  ;
                  ;
                  ;
FF00                      ORG 0FF00H            ;MARRS-1 SYSTEM CREDIT AREA
FF00  4D 41 52 52         FCC 'MARRS-1 CREATORS'
FF04  53 2D 31 20
FF08  43 52 45 41
FF0C  54 4F 52 53
FF10  31 4C 54 20         FCC '1LT RANDALL OWEN'
FF14  52 41 4E 44
FF18  41 4C 4C 20
FF1C  4F 57 45 4E
FF20  43 41 50 54         FCC 'CAPT           '
FF24  20 20 20 20
FF28  20 20 20 20
FF2C  20 20 20 20
FF30  20 20 42 45         FCC '  BERT         '
FF34  52 54 20 20
FF38  20 20 20 20
FF3C  20 20 20 20
FF40  20 20 20 20         FCC '    SCHNEIDER  '
FF44  53 43 48 4E
FF48  45 49 44 45
FF4C  52 20 20 20
FF50  31 4C 54 20         FCC '1LT TOM CLIFFORD'
FF54  54 4F 4D 20
FF58  43 4C 49 46
FF5C  46 4F 52 44
FFF5                      ORG 0FFF5H            ;RESET VECTOR AREA
FFF5  7E EC FC    LASTCH  JMP INIT              ;LAST CHANCE FOR RECOVERY
FFF8  BF F7       SYSIRQ  FDB IRQVEC            ; * FOR MASKABLE INTERRUPT REQUEST
FFFA  BF FA       SYSSWI  FDB SWIVEC            ; * FOR SOFTWARE INTERRUPT REQUEST
FFFC  BF FD       SYSNMI  FDB NMIVEC            ; * FOR NONMASKABLE IRQ
FFFE  EC FC       RESETV  FDB INIT              ; * FOR MASTER AND POWER ON RESET
                  ;
                  ;*****************************************************************
                  ;
0000                          end               ;THAT'S ALL FOLKS

No error(s).
```

SYMBOL TABLE FOR FILE NAVROM.A

A.C	0000	A.L	0010	A.RX	0001	A.S	0000
A.T	0000	A.TX	0001	A.X	0008	A0	0001
A1	0002	A2	0004	A3	0008	A4	0010
A5	0020	A6	0040	A7	0080	ABORT	E287
ACIAA	E1FB	ACIACR	0060	ACIAI	BFF5	ACIAL	0010
ACIARX	0001	ACIASTAT	0000	ACIAT	0000	ACIATX	0001
ACIAX	0008	ADDAB	E71C	ADDABX1	E718	ADDH	BFCE
ADDL	BFCC	ADDRS	E635	ADDZ	E731	ADR	BFCA
ALPNUM	E815	ANNOTOK	E831	ANNUM	E829	ANOK	E825
ANRTS	E833	AREG	BFEC	ASCIIL	E7EC	ASCIIR	E7F0
ASCRTS	E7FA	B0	0001	B1	0002	B2	0004
B3	0008	B4	0010	B5	0020	B6	0040
B7	0080	BADSZMEM	EAE4	BADTAP	E4C1	BCPTMAB1	BE99
BCPTMAB2	BE9B	BCPTMAB3	BE9D	BCPTMCD1	BE9F	BCPTMCD2	BEA1
BCPTMCD3	BEA3	BCPTMF1	BEAB	BCPTMF2	BEAD	BCPTMF3	BEAF
BCPTML1	BEB1	BCPTML2	BEB3	BCPTML3	BEB5	BCPTMR1	BEB7
BCPTMR2	BEB9	BCPTMR3	BEBB	BCPTMV1	BEA5	BCPTMV2	BEA7
BCPTMV3	BEA9	BLOCK1	F1AB	BLOCK2	F1BC	BLOCK3	F24A
BOS	BE7F	BREAK	E1F8	BREAK1	E291	BREG	BFEB
BUF	BF80	BUFEND	BFC7	BUFPTR	BFD0	BYTENM1	E376
BYTENUM	E36A	C0	0001	C1	0002	C2	0004
C3	0008	C4	0010	C5	0020	C6	0040
C7	0080	CHEKSM	E301	CHKFWC1	E937	CHKFWC2	E930
CHKLWC1	E96B	CHKLWC2	E976	CHKRWC1	E94C	CHKRWC2	E957
CKSUM	BFD4	COLD	BF05	CONENDC	F550	CONFND	E85F
CONHB	E84F	CONNOGD	E87E	CONSLP	E86A	CONV4	E329
COUNT	BFD3	CPRET	E34B	CPRMEM	E338	CRACIAL	BE82
CRACIAT	BE80	CRACIAX	BE81	CREG	BFEA	CRPIAA	BE95
CRPIAB	BE96	CRPIAC	BE97	CRPIAD	BE98	CRPTMAB1	BE83
CRPTMAB2	BE84	CRPTMAB3	BE85	CRPTMCD1	BE86	CRPTMCD2	BE87
CRPTMCD3	BE88	CRPTMF1	BE8C	CRPTMF2	BE8D	CRPTMF3	BE8E
CRPTML1	BE8F	CRPTML2	BE90	CRPTML3	BE91	CRPTMR1	BE92
CRPTMR2	BE93	CRPTMR3	BE94	CRPTMV1	BE89	CRPTMV2	BE8A
CRPTMV3	BE8B	CS1	E30E	CTABLE	E882	D0	0001
D1	0002	D2	0004	D3	0008	D4	0010
D5	0020	D6	0040	D7	0080	DCRET	E91D
DCRMEM	E911	DISMEM	E34C	DISMEM1	E354	DL10	E27D
DLOOP	E275	DNESZMEM	EAFF	DONEPOWU	ED58	DSZMEM2	EB09
ECHO	BFE8	ENDDM	E3E1	EOF	E3E2	EOF1	E3E7
FEE	E91E	FIE	E924	FINDS	E4C3	FOE	E92A
FRONTWHE	E933	FS10	E4C4	FSTSZGD	EAF1	FUM	E930
FWCOUNT	BEF7	FWDONE	E946	FWRESET	E9A4	GETRG1	E401
GETRG3	E407	GETRG4	E41B	GETRNG	E3F0	GO	E420
GO10	E42B	INCMEM	E908	INIT	ECFC	INIT2	ED3B
INITACIA	ECF2	INITPIA	ECD8	INITPTM	ECDF	INK	E627
INLOOP1	E398	INLOOP2	E3A8	INRET	E910	INTACIAL	ECC9
INTACIAT	ECAB	INTACIAX	ECBA	INTMASK	BEEE	INTPIAAB	EB37
INTPIACD	EB6D	INTPTMAB	EBA3	INTPTMCD	EBCF	INTPTMF	EC27
INTPTML	EC53	INTPTMR	EC7F	INTPTMV	EBFB	INWAIT	E838

IO	C000	IOOFFSET	BEDB	IROVEC	BFF7	ISCTRLX	E325
JBAD	E636	JP1NCX	EB34	LASTCH	FFF5	LDR10	E49B
LEFTWHEE	E967	LHF4	E4AF	LHF9	E4B3	LKSONTMP	BF7C
LOAD	E42E	LOAD1	E463	LOAD2	E433	LOCVV	E664
LOOFST	E43C	LOOKSON	EDAB	LOOPPOS1	EA9F	LSXTEMP	BF7E
LWCOUNT1	BEFD	LWCOUNT2	BEFF	LWDONE	E984	LWMOD1	BF03
LWMOD2	BF04	LWRESET	E985	MA	E6E8	MACIA	0000
MACIAI	BFF5	MBADDR	E047	MBEGA	A002	MBYTE	E055
MBYTECT	A00B	MC1	E044	MC2	E132	MCHANGE	E085
MCHASI	E087	MCKSM	A00A	MCONTL2	E0FF	MCONTRL	E0E3
MENDA	A004	MENDAI	A005	MINIHC	E0BE	MINCH	E078
MINEEE	E1AC	MINHEX	E0AA	MINOEKI	E1BA	MINOEK2	E1BB
MINOEKO	E1B1	MIO	E000	MIOS	E1EA	MIOV	A000
MLOAD	E00A	MLOADI1	E02F	MLOAD15	E03B	MLOAD19	E040
MLOAD3	E013	MMCL	E19D	MMCLOFF	E19C	MMCONT	A011
MMTAPE1	E134	MNIO	A006	MONENT	E242	MONITR	E245
MORETIC	BEC7	MOUT2H	E0BF	MOUT2HS	E0CA	MOUT4HS	E0C8
MOUTCH	E075	MOUTEEE	E1D1	MOUTHL	E067	MOUTHR	E068
MOUTS	E0CC	MOUTS2	E0CE	MOVE	E639	MOVE1	E646
MOVE2	E63E	MPDATA1	E07E	MPDATA2	E07B	MPOWDWN	E005
MPRINT	E11F	MPUN11	E148	MPUN22	E15A	MPUN23	E15C
MPUN32	E17C	MPUNCH	E130	MPY8	E774	MPYLP	E77C
MPYSHFT	E780	MSAV	E1A5	MSFE	E113	MSFEI	E11D
MSGMON	E28A	MSP	A008	MSTACK	A042	MTEMP	A00E
MTW	A00F	MTW1	A010	MXHI	A00C	MXLOW	A00D
MXTEMP	A012	MYFLAG0	BFE5	MYFLAG1	BFE6	NA1	E4F2
NA3	E506	NEX2D	E4CC	NMIVEC	BFFD	NSSLA	BEE2
NSSLB	BEE3	NSSLC	BEE4	NSSLD	BEE5	NXTADR	E4E6
NXTRTS	E4F1	OC10	E51C	OC20	E528	ODESSEY	BF0B
OFFSET	BFC8	OSEMOD	BF01	OSEREG	BEF7	OSRAM	BE00
OUTCH	E50B	OUTCHX	E509	OUTLOOP	E386	P.AB	0048
P.CD	0050	P.CRA	0001	P.CRB	0003	P.CRC	0001
P.CRD	0003	P.DDA	0000	P.DDB	0002	P.DDC	0000
P.DDD	0002	P.PRA	0000	P.PRB	0002	P.PRC	0000
P.PRD	0002	P.SRA	0001	P.SRB	0003	P.SRC	0001
P.SRD	0003	P4HEXS	E5A5	PBADR	E5ED	PC	E6A0
PCRLF	E52A	PER10D	E3B4	PEXISTS	E5AC	PHEX	E7C3
PHF20	E546	PIAAB	0048	PIACD	0050	PIACRA	0001
PIACRB	0003	PIACRC	0001	PIACRD	0003	PIADDA	0000
PIADDB	0002	PIADDC	0000	PIADDD	0002	PIAPA	0000
PIAPB	0002	PIAPC	0000	PIAPD	0002	PIASTATA	0001
PIASTATB	0003	PIASTATC	0001	PIASTATD	0003	PINCX	E7D1
PINXRTS	E7D8	PMESS	E7FB	PMSRTS	E80A	POS	EA8E
POSDONE	EAB7	POWERUP	BEDC	PR1	E2CA	PR10	E2DA
PR20	E2E4	PREC10	E585	PREG	BFEF	PREGS	E2C5
PRELPTMF	E986	PRELPTML	E99A	PRELPTMR	E990	PRNTASC	E3B6
PS	E6A5	PSPACE	E5A7	PTMAB	0018	PTMCD	0020
PTMCR1	0000	PTMCR2	0001	PTMCR3	0000	PTMF	0030
PTML	0038	PTMR	0040	PTMSTAT	0001	PTMV	0028
PULXA	E705	PUNBYTE	E59D	PUNCH	E52E	PUNCH1	E533
PUND10	E558	PUND20	E55A	PUNT2	E197	PUTA	E7E1
PUTAX	E7DC	PUTRDY	E7E2	PX2	E5BC	PXISTX	E5AF

Q6SPACE	E8E4	QBADR	E8A3	QCKSMER	E88E	QEOF	E8B5
QQUES	E8B9	QREGNAM	E8EB	QRNGERR	E8AB	QSI	E8DB
QTAPER	E8C7	QTPEOF	E8D0	RAMSIZEH	BEDF	RAMSIZEL	BED0
RDPRE	E464	RDSONDON	EA8C	READAC1	E319	READSONA	EA54
RECTYP	BFD2	RESETV	FFFE	RESTAK	E2F1	RET39	E328
RIGHTWHE	E948	RNGERR	E414	ROMLAYRA	EB0A	ROMOVERR	EB16
ROZR2P2	E334	RS	E6B6	RSRSR	E65A	RSRXIT	E68C
RT10	E25A	RT20	E261	RT90	E267	RUS10	E2F7
RWCOUNT1	BEF9	RWCOUNT2	BEFB	RWDONE	E965	RWMOD1	BF01
RWMOD2	BF02	RWRESET	E9A8	SCARRY	E810	SETM1	E5F3
SETMEM	E5DF	SETOFF	E5C2	SETOUT	E5D7	SETPUL	E5DE
SETUS	E811	SIZELP1	EABF	SIZEMEM	EAB8	SM	E5F4
SM10	E5FD	SM30	E60E	SONARA	BEC1	SONARB	BEC2
SONARC	BEC3	SONARD	BEC4	SONARSLA	BEBD	SONARSLB	BEBE
SONARSLC	BEBF	SONARSLD	BEC0	SONCHANG	BEE1	SONDATRA	BEF0
SONDATRB	BEF2	SONDATRC	BEF4	SONDATRD	BEF6	SONDATSA	BEEF
SONDATSB	BEF1	SONDATSC	BEF3	SONDATSD	BEF5	SONNEXA	BEE2
SONNEXB	BEE3	SONNEXC	BEE4	SONNEXD	BEE5	SONPRINT	ED5F
SONTIME	BEC5	SP1	ED6B	SP2	ED6E	SP3	ED7D
SPA128	ED93	SPA64	ED9F	SREG	BFF1	SSLA	BEBD
SSLB	BEBE	SSLC	BEBF	SSLD	BEC0	STAB	E6C9
START	E1EF	START1	E1FD	STAUXH	E722	SUBABX1	E742
SWI20	E2A3	SWI30	E2A8	SWI40	E2AF	SWI50	E2B2
SWIHAN	E295	SWIVEC	BFFA	SYSFLAG	BFE7	SYSIRQ	FFF8
SYSNMI	FFFC	SYSSWI	FFFA	T.AB	0018	T.C1	0000
T.C2	0001	T.C3	0000	T.CD	0020	T.CNT1	0002
T.CNT2	0004	T.CNT3	0006	T.F	0030	T.L	0038
T.LATCH1	0002	T.LATCH2	0004	T.LATCH3	0006	T.R	0040
T.S	0001	T.V	0028	TA	E72B	TABX1	E6CF
TCOUNT	BFE9	TEMP0	BFD5	TEMP1	BFD7	TEMP2	BFD9
TEMP3	BFDB	TEMP4	BFDD	TEMP5	BFDF	TEMP6	BFE1
TEMP7	BFE3	TESTZ	E727	TICHAN	E904	TICHAN1	E9C2
TICHAN2	E9CD	TICHAN3	EA38	TICTEMP0	BEE6	TICTEMP1	BEE8
TICTEMP2	BEEA	TICTEMP3	BEEC	TICTIME	BED9	TIMEZERO	BECA
TRC	E6AC	TSUB	E751	TUSRAM	BC00	USRSTAK	BE00
USWI	BFF3	W20	E61A	W30	E626	WAITTY	E611
WARM	BF08	XABX1	E6D9	XREG	BFED	XZERO	0000

151

```
                ;*****************************************
                ;*                                       *
                ;*          APPENDIX  B                  *
                ;*                                       *
                ;*****************************************
                ;           FILE: XTEND.A
                ;           EXTENDED INTERRUPT HANDLER AS OF 20 OCT 1984
                ;
                ;
                ;
BC00            TUSRAM      EQU     0BC00H      ;TOP OF USER RAM
ECFC            INIT        EQU     0ECFCH      ;SYSTEM INITIALIZATION ENTRY POINT
0000            XZERO       EQU     0X000H      ;LOAD ZERO INTO INDEX REGISTER
C000            IO          EQU     0C000H      ;IO AREA
0000            ACIAT       EQU     0           ;TERMINAL ACIA OFFSET INTO IO AREA
0000            A.S         EQU     0           ;ACIA STATUS OFFSET
0000            A.C         EQU     0           ;ACIA CONTROL OFFSET
0001            A.TX        EQU     1           ;ACIA TRANSMIT REGISTER OFFSET
0001            A.RX        EQU     1           ;ACIA RECEIVE REGISTER OFFSET
BEEE            INTMASK     EQU     0BEEEH      ;INTERRUPT MASK 0=NO $FF=YES
EA54            READSONAR   EQU     0EA54H      ;READ SONAR SUBROUTINE
BEE1            SONCHANGE   EQU     0BEE1H      ;CHANGE SONARS IF=0 ELSE NO=$55
EBFB            INTPTMV     EQU     0EBFBH
0011            XON         EQU     011H
0013            XOFF        EQU     013H
BEC7            MORETIC     EQU     0BEC7H      ;JUMP VECTOR FOR EXTENDED INTERRUPTS
BED9            TICTIME     EQU     0BED9H      ;TIME SINCE TIME ZERO OR LAST RESET
                                                ;IN TENTHS OF SECONDS OR REPETITIONS
                                                ;OF THE SONAR INTERRUPT CLOCK
E7EC            ASCIIL      EQU     0E7ECH      ;CONVERT LEFT NIBBLE OF A BYTE TO ASCII
E7F0            ASCIIR      EQU     0E7F0H      ;CONVERT RIGHT NIBBLE OF BYTE TO ASCII
BEF7            FWCOUNT     EQU     0BEF7H      ;FRONT WHEEL COUNT
BEF9            RWCOUNT1    EQU     0BEF9H      ;RIGHT WHEEL COUNT BACKWARD
BEFB            RWCOUNT2    EQU     0BEFBH      ;RIGHT WHEEL COUNT FORWARD
BEFD            LWCOUNT1    EQU     0BEFDH      ;LEFTWHEEL COUNT BACKWARD
BEFF            LWCOUNT2    EQU     0BEFFH      ;LEFTWHEEL COUNT FORWARD
BEEF            SONDATSA    EQU     0BEEFH      ;AS IN   'WHERE'S THE ___'
BEF0            SONDATRA    EQU     0BEF0H      ;SONAR RANGE FOR A
BEF1            SONDATSB    EQU     0BEF1H      ;SONAR SELECT BYTE FOR B
BEF2            SONDATRB    EQU     0BEF2H      ;SONAR RANGE FOR B
BEF3            SONDATSC    EQU     0BEF3H      ;SONAR SELECT BYTE FOR C
BEF4            SONDATRC    EQU     0BEF4H      ;SONAR RANGE FOR C
BEF5            SONDATSD    EQU     0BEF5H      ;SONAR SELECT BYET FOR D
BEF6            SONDATRD    EQU     0BEF6H      ;SONAR RANGE FOR D
ED5F            SONPRINT    EQU     0ED5FH      ;SUBROUTINE THAT CONVERTS THE SONAR RANGE
                                                ;IN BINARY TO DECIMAL TENTHS OF FEET
BFCA            ADR         EQU     0BFCAH      ;DESTINATION ADDRESS FOR MOVE COMMAND
BFCC            ADDL        EQU     0BFCCH      ;START OF MOVE ADDRESS FOR MOVE COMMAND
BFCE            ADDH        EQU     0BFCEH      ;END OF MOVE ADDRESS FOR MOVE COMMAND
E646            MOVE1       EQU     0E646H      ;SUBROUTINE ADDRESS OF MOVE COMMAND
BEE2            SONNEXA     EQU     0BEE2H      ;NEXT SONAR TO BE SELECTED FOR A
BEE3            SONNEXB     EQU     0BEE3H      ;NEXT SONAR TO BE SELECTED FOR B
```

```
BEE4                SONNEXC     EQU     0BEE4H          ;NEXT SONAR TO BE SELECTED FOR C
BEE5                SONNEXD     EQU     0BEE5H          ;NEXT SONAR TO BE SELECTED FOR D
                    ;
                    ;
0100                            ORG     00100H
0100  0F            MAININIT    SEI                     ;ALLOW NO INTERRUPTS UNTIL
                                                        ;INITIALIZATION IS COMPLETE
0101  8E BC 00                  LDS     #TUSRAM         ;INITIALIZE STACK POINTER
0104  86 B5                     LDAA    #0B5H           ;SET UP CONTROL WORD FOR TERMINAL
0106  B7 C0 00                  STAA    IO+ACIAT+A.C    ;ACIA TO ALLOW INTERRUPT GENERATION
                                                        ;ON BOTH TRANSMIT AND RECEIVE
0109  CE 01 21                  LDX     #XTEND          ;SET UP MORETIC EXTENDED INTERRUPT
010C  FF BE C8                  STX     MORETIC+1       ;HANDLER
010F  86 7E                     LDAA    #07EH
0111  B7 BE C7                  STAA    MORETIC
0114  CE 00 00                  LDX     #XZERO
0117  FF BE D9                  STX     TICTIME
011A  BD EB FB                  JSR     INTPTMV         ;REINITIALIZE THE TICTIME COUNTER
011D  0E                        CLI                     ;ALLOW INTERRUPTS
                    ;
                    ;
                    ;
                    ;
011E  3E            TWIDDLE     WAI                     ;DO NOTHING.  WAIT FOR INTERRUPTS
011F  20 FD                     BRA     TWIDDLE
                    ;
                    ;
                    ;*****************************************************************
                    ;           NOTE THAT THE MAIN PROGRAM IS DOING NOTHING AND       *
                    ;           AS SUCH CAN BE MODIFIED TO TAKE ADVANTAGE OF PROCESSOR *
                    ;           CYCLES NOT USED BY THE INTERRUPT HANDLER              *
                    ;*****************************************************************
                    ;
                    ;
                    ;       SUBROUTINE:     XTEND           AN EXTENTION OF THE EXISTING
                    ;                                       NAV COMPUTER INTERRUPT HANDLER.
                    ;                                       ITS PURPOSE IS TO GATHER TIME
                    ;                                       TAGED SONAR AND OPTICAL SHAFT
                    ;                                       ENCODER DATA AND SEND IT OUT
                    ;                                       THE TERMINAL PORT TO AN EXTERNAL
                    ;                                       COMPUTER FOR POST MISSION
                    ;                                       PROCESSING OR REAL TIME ANALYSIS
                    ;                                       FOR DRIVE COMPUTER COMMAND GENERATION.
                    ;
                    ;
                    ;
0121  7D BE E1      XTEND       TST     SONCHANGE       ;HAVE SONARS BEEN CHANGED SINCE
                                                        ;LAST REQUEST?
0124  27 3B                     BEQ     XTEND2          ;IF NOT THEN CONTINUE INTERRUPT
                                                        ;PROCESSING
0126  7D 05 6A      CANDATA     TST     BUFLEFT         ;ELSE SEE IF MORE THAN 256 BYTES IN
0129  22 03                     BHI     CALLRDSON       ;IN BUFFFER. IF YES CALL READSONAR
```

```
012B  7E 01 61                JMP   XTEND2        ;ELSE CONTINUE INTERRUPT PROCESSING
012E  4F          CALLRDSON   CLRA
012F  43                      COMA                ;CREATE A LINE OF SONAR AND OSE TIME
0130  B7 BE EE                STAA  INTMASK       ;TAGED DATA
0133  BD EA 54                JSR   READSONAR     ;GET THE SONAR DATA AND TIME
0136  4F                      CLRA
0137  B7 BE EE                STAA  INTMASK
013A  BD 04 2D                JSR   SONSWITCH     ;SET UP NEXT SONARS TO BE USED
013D  BD 02 43                JSR   PUTTIME       ;PUT TIME IN BUFFER
0140  BD 02 62                JSR   PUTFW         ;PUT FRONT WHEEL COUNT IN BUFFER
0143  BD 02 6C                JSR   PUTLW         ;PUT LEFT WHEEL COUNTS IN BUFFER
0146  BD 02 8B                JSR   PUTRW         ;PUT RIGHT WHEEL COUNTS IN BUFFER
0149  BD 02 AA                JSR   PUTA          ;PUT SONAR READINGS IN BUFFER
014C  BD 02 FA                JSR   PUTB
014F  BD 03 4A                JSR   PUTC
0152  BD 03 9A                JSR   PUTD
0155  BD 03 EA                JSR   PUTLINE       ;PUT THE LINE BUFFER INTO THE SPOOLER
0158  BD 04 00                JSR   DECBLEFT      ;DECREMENT THE SPOOLER BUFFER BY 64
015B  BD 04 0B                JSR   ADDLEFTPR     ;ADD 64 TO NUMBER LEFT TO PRINT
015E  BD 04 16                JSR   ADDBUFNX      ;POINT TO NEXT AVAILABLE SPOOLER ADDRESS
0161  CE 00 00    XTEND2      LDX   #XZERO
0164  BC 05 66                CPX   LEFTPR        ;ARE CHARACTERS AVAILABLE TO TRANSMIT?
0167  26 03                   BNE   XTEND3        ;YES GO TRANSMIT
0169  7E 01 9A                JMP   TSTRX         ;NO.  CONTINUE INTERRUPT PROCESSING.
016C  7D 05 65    XTEND3      TST   MEXOFF        ;IS XOFF IN EFFECT?
016F  26 29                   BNE   TSTRX         ;YES.  GO CHECK RECEIVE BUFFER.
0171  B6 C0 00                LDAA  IO+ACIAT+A.S  ;ELSE CHECK FOR TRANSMIT BUFFER EMPTY.
0174  47                      ASRA
0175  47                      ASRA
0176  24 22                   BCC   TSTRX         ;NOT EMPTY SO CHECK RECEIVE BUFFER.
0178  FE 05 68                LDX   NXCHPR        ;YES EMPTY SO POINT TO NEXT CHARACTER
017B  A6 00                   LDAA  0,X           ;GET IT AND TRANSMIT IT OUT.
017D  B7 C0 01                STAA  IO+ACIAT+A.TX
0180  08                      INX                 ;POINT TO NEXT CHARACTER
0181  8C A0 00                CPX   #SPBUFEND+1   ;IS IT THE END OF THE BUFFER?
0184  26 03                   BNE   UPNXCHPR      ;NO.  RESTORE THE POINTER
0186  FE 05 6E                LDX   SPBUFST       ;YES.  POINT TO THE START OF THE BUFFER
0189  FF 05 68    UPNXCHPR    STX   NXCHPR        ;RESTORE THE POINTER
018C  FE 05 66                LDX   LEFTPR        ;ONE LESS TO PRINT
018F  09                      DEX
0190  FF 05 66                STX   LEFTPR
0193  FE 05 6A                LDX   BUFLEFT       ;ONE MORE FOR THE AVAILABLE BUFFER
0196  08                      INX
0197  FF 05 6A                STX   BUFLEFT
019A  B6 C0 00    TSTRX       LDAA  IO+ACIAT+A.S  ;CHECK TO SEE IF CHARACTER RECEIVED
019D  47                      ASRA
019E  24 25                   BCC   TSTRX2        ;NOTHING RECEIVED
01A0  B6 C0 01                LDAA  IO+ACIAT+A.RX ;YES.  GET RECEIVED CHARACTER.
01A3  81 11                   CMPA  #011H         ;IS IT XON?
01A5  26 05                   BNE   TSTRX3        ;NO.  CHECK FOR OTHER COMMMANDS
01A7  7F 05 65                CLR   MEXOFF        ;YES SO CLEAR THE XOFF FLAG
01AA  20 B5                   BRA   XTEND2        ;AND GO TRY TO TRANSMIT A CHARACTER
```

```
01AC  81 13        TSTRX3   CMPA  #013H      ;IS IT XOFF?
01AE  26 07                 BNE   TSTRX4     ;NO.  CHECK FOR OTHER COMMANDS
01B0  86 FF                 LDAA  #0FFH      ;YES.  GO SET THE XOFF FLAG
01B2  B7 05 65              STAA  MEXOFF
01B5  20 0E                 BRA   TSTRX2     ;END RECEIVE FUNCTION
01B7  81 07        TSTRX4   CMPA  #007       ;IS IT CONTROL G?
01B9  26 0D                 BNE   TSTRX5     ;NO.  CHECK FOR OTHER COMMANDS
01BB  BD EB FB              JSR   INTPTMV    ;RESET 10 HZ COUNTER
01BE  DE 00                 LDX   XZERO      ;YES.  RESET TICTIME TO ZERO
01C0  FF BE D9              STX   TICTIME
01C3  20 00                 BRA   TSTRX2
01C5  39           TSTRX2   RTS              ;END OF INTERRUPT PROCESSING
01C6  01                    NOP
01C7  01                    NOP
01C8  81 31        TSTRX5   CMPA  #031H      ;IS IT 1?
01CA  26 19                 BNE   TSTRX6     ;NO.  CHECK FOR OTHER COMMANDS
                                             ;YES.  DO SONARS 1 AT A TIME
01CC  CE 04 B9              LDX   #PTAB1END  ;POINT TO END OF TABLE
01CF  FF 04 48              STX   SONEND+1
01D2  CE 04 5D              LDX   #PTAB1     ;POINT TO START OF TABLE
01D5  FF 04 4D              STX   SONEND2+1
01D8  FF 04 5B              STX   PTABNEXT
01DB  BD EB FB              JSR   INTPTMV    ;RESET 10 HZ COUNTER
01DE  DE 00                 LDX   XZERO      ;YES.  RESET TICTIME TO ZERO
01E0  FF BE D9              STX   TICTIME
01E3  20 E0                 BRA   TSTRX2
01E5  81 32        TSTRX6   CMPA  #032H      ;IS IT 2?
01E7  26 19                 BNE   TSTRX7     ;NO.  CHECK FOR OTHER COMMANDS
                                             ;YES.  DO SONARS 2 AT A TIME
01E9  CE 04 E9              LDX   #PTAB2END  ;POINT TO END OF TABLE
01EC  FF 04 48              STX   SONEND+1
01EF  CE 04 BD              LDX   #PTAB2     ;POINT TO START OF TABLE
01F2  FF 04 4D              STX   SONEND2+1
01F5  FF 04 5B              STX   PTABNEXT
01F8  BD EB FB              JSR   INTPTMV    ;RESET 10 HZ COUNTER
01FB  DE 00                 LDX   XZERO      ;YES.  RESET TICTIME TO ZERO
01FD  FF BE D9              STX   TICTIME
0200  20 C3                 BRA   TSTRX2
0202  81 33        TSTRX7   CMPA  #033H      ;IS IT 3?
0204  26 19                 BNE   TSTRX8     ;NO.  CHECK FOR OTHER COMMANDS
                                             ;YES.  DO SONARS 3 AT A TIME
0206  CE 05 09              LDX   #PTAB3END  ;POINT TO END OF TABLE
0209  FF 04 48              STX   SONEND+1
020C  CE 04 ED              LDX   #PTAB3     ;POINT TO START OF TABLE
020F  FF 04 4D              STX   SONEND2+1
0212  FF 04 5B              STX   PTABNEXT
0215  BD EB FB              JSR   INTPTMV    ;RESET 10 HZ COUNTER
0218  DE 00                 LDX   XZERO      ;YES.  RESET TICTIME TO ZERO
021A  FF BE D9              STX   TICTIME
021D  20 A6                 BRA   TSTRX2
021F  81 34        TSTRX8   CMPA  #034H      ;IS IT 4?
0221  26 19                 BNE   TSTRX9     ;NO.  CHECK FOR OTHER COMMANDS
```

```
                                                        ;YES.  DO SONARS 4 AT A TIME
0223   CE 05 21                    LDX    #PTAB4END     ;POINT TO END OF TABLE
0226   FF 04 48                    STX    SONEND+1
0229   CE 05 0D                    LDX    #PTAB4        ;POINT TO START OF TABLE
022C   FF 04 4D                    STX    SONEND2+1
022F   FF 04 5B                    STX    PTABNEXT
0232   BD EB FB                    JSR    INTPTMV       ;RESET 10 HZ COUNTER
0235   DE 00                       LDX    XZERO         ;YES.  RESET TICTIME TO ZERO
0237   FF BE D9                    STX    TICTIME
023A   20 89                       BRA    TSTRX2
023C   81 03          TSTRX9       CMPA   #003H         ;IS IT CONTROL C?
023E   26 85                       BNE    TSTRX2        ;NO.  END RECEIVE FUNCTION
0240   7E EC FC                    JMP    INIT          ;JUMP TO RESET SYSTEM
                      ;
                      ;
                      ;
                      ;      SUBROUTINE:  PUTTIME        PUTS TIME INTO THE LINE BUFFER
0243   CE 05 27       PUTTIME      LDX    #LNTIME
0246   B6 BE D9                    LDAA   TICTIME
0249   BD 02 53                    JSR    PUT2HEX
024C   B6 BE DA                    LDAA   TICTIME+1
024F   BD 02 53                    JSR    PUT2HEX
0252   39                          RTS
                      ;
                      ;
                      ;
                      ;
                      ;
                      ;      SUBROUTINE:  PUT2HEX        CONVERTS A BYTE INTO TWO ASCII
                      ;                                  CHARACTERS. ON ENTRY, THE INDEX
                      ;                                  REGISTER POINTS TO WHERE THE TWO
                      ;                                  ASCII CHARACTERS ARE TO BE PLACED.
0253   36             PUT2HEX      PSHA
0254   BD E7 EC                    JSR    ASCIIL        ;CONVERT THE LEFT NIBBLE
0257   A7 00                       STAA   0,X
0259   08                          INX
025A   32                          PULA
025B   BD E7 F0                    JSR    ASCIIR        ;CONVERT THE RIGHT NIBBLE
025E   A7 00                       STAA   0,X
0260   08                          INX
0261   39                          RTS
                      ;
                      ;
                      ;
                      ;
                      ;
                      ;      SUBROUTINE:  PUTFW          PUT FRONT WHEEL COUNT IN LINE BUFFER
0262   CE 05 2C       PUTFW        LDX    #LNFW
0265   B6 BE F8                    LDAA   FWCOUNT+1
0268   BD 02 53                    JSR    PUT2HEX
026B   39                          RTS
                      ;
```

```
                        ;
                        ;
                        ;
                        ;
                        ;
                        ;
                        ;
                        ;       SUBROUTINE:  PUTLW          PUT LEFT WHEEL COUNTS IN LINE BUFFER
026C   CE 05 2F         PUTLW        LDX     #LNBLW1
026F   B6 BE FD                     LDAA    LWCOUNT1       ;GET THE REVERSE COUNTS
0272   BD 02 53                     JSR     PUT2HEX
0275   B6 BE FE                     LDAA    LWCOUNT1+1
0278   BD 02 53                     JSR     PUT2HEX
027B   CE 05 34                     LDX     #LNFLW2        ;GET THE FORWARD COUNTS
027E   B6 BE FF                     LDAA    LWCOUNT2
0281   BD 02 53                     JSR     PUT2HEX
0284   B6 BF 00                     LDAA    LWCOUNT2+1
0287   BD 02 53                     JSR     PUT2HEX
028A   39                           RTS
                        ;
                        ;
                        ;
                        ;
                        ;
                        ;
                        ;
                        ;
                        ;
                        ;
                        ;
                        ;       SUBROUTINE:  PUTRW          PUT RIGHT WHEEL COUNTS IN LINE BUFFER
028B   CE 05 39         PUTRW        LDX     #LNBRW1
028E   B6 BE F9                     LDAA    RWCOUNT1       ;GET REVERSE COUNTS
0291   BD 02 53                     JSR     PUT2HEX
0294   B6 BE FA                     LDAA    RWCOUNT1+1
0297   BD 02 53                     JSR     PUT2HEX
029A   CE 05 3E                     LDX     #LNFRW2        ;GET FORWARD COUNTS
029D   B6 BE FB                     LDAA    RWCOUNT2
02A0   BD 02 53                     JSR     PUT2HEX
02A3   B6 BE FC                     LDAA    RWCOUNT2+1
02A6   BD 02 53                     JSR     PUT2HEX
02A9   39                           RTS
                        ;
                        ;
                        ;
                        ;
                        ;
                        ;
                        ;
                        ;       SUBROUTINE:  PUTA           PUT SONAR A SELECTED IN LINE BUFFER
02AA   CE 05 44         PUTA         LDX     #LNATRANS      ;POINT TO LINE POSITION
02AD   B6 BE EF                     LDAA    SONDATSA       ;GET THE SELECTED TRANSDUCER #
```

```
02B0  81 01                    CMPA  #1          ;WAS IT 0
02B2  26 06                    BNE   PUTA2       ;NO CONTINUE SEARCH
02B4  86 30                    LDAA  #'0'
02B6  A7 00                    STAA  0,X
02B8  20 36                    BRA   PUTA8       ;GO PUT DISTANCE READING
02BA  81 02          PUTA2     CMPA  #2          ;WAS IT I
02BC  26 06                    BNE   PUTA3       ;NO CONTINUE SEARCH
02BE  86 31                    LDAA  #'1'
02C0  A7 00                    STAA  0,X
02C2  20 2C                    BRA   PUTA8       ;GO PUT DISTANCE READING
02C4  81 04          PUTA3     CMPA  #4          ;WAS IT 2
02C6  26 06                    BNE   PUTA4       ;NO CONTINUE SEARCH
02C8  86 32                    LDAA  #'2'
02CA  A7 00                    STAA  0,X
02CC  20 22                    BRA   PUTA8       ;GO PUT DISTANCE READING
02CE  81 10          PUTA4     CMPA  #010H       ;WAS IT 4
02D0  26 06                    BNE   PUTA5       ;NO CONTINUE SEARCH
02D2  86 34                    LDAA  #'4'
02D4  A7 00                    STAA  0,X
02D6  20 18                    BRA   PUTA8       ;GO PUT DISTANCE READING
02D8  81 20          PUTA5     CMPA  #020H       ;WAS IT 5
02DA  26 06                    BNE   PUTA6       ;NO CONTINUE SEARCH
02DC  86 35                    LDAA  #'5'
02DE  A7 00                    STAA  0,X
02E0  20 0E                    BRA   PUTA8       ;GO PUT DISTANCE READING
02E2  81 40          PUTA6     CMPA  #040H       ;WAS IT 6
02E4  26 06                    BNE   PUTA7       ;NO CONTINUE SEARCH
02E6  86 36                    LDAA  0'6'
02E8  A7 00                    STAA  0,X
02EA  20 04                    BRA   PUTA8       ;GO PUT DISTANCE READING
02EC  86 2A          PUTA7     LDAA  0'*'
02EE  A7 00                    STAA  0,X
02F0  B6 BE F0       PUTA8     LDAA  SONDATRA    ;GET THE DISTANCE READING
02F3  CE 05 45                 LDX   #LNAREADING ;POINT TO THE LINE POSITION
02F6  BD ED 5F                 JSR   SONPRINT    ;CONVERT THE READING TO DECIMAL
                                                 ;AND PUT IT IN THE LINE BUFFER
02F9  39                       RTS               ;RETURN TO CALLER
                     ;
                     ;
                     ;
                     ;
                     ;
                     ;
                     ;
                     ;   SUBROUTINE:  PUTB       PUT SONAR B SELECTED IN LINE BUFFER
02FA  CE 05 4B       PUTB      LDX   #LNBTRANS   ;POINT TO LINE POSITION
02FD  B6 BE FI                 LDAA  SONDATSB    ;GET THE SELECTED TRANSDUCER #
0300  81 01                    CMPA  #1          ;WAS IT 0
0302  26 06                    BNE   PUTB2       ;NO CONTINUE SEARCH
0304  86 30                    LDAA  0'0'
0306  A7 00                    STAA  0,X
0308  20 36                    BRA   PUTB3       ;GO PUT DISTANCE READING
```

```
030A   81 02        PUTB2      CMPA   #2            ;WAS IT 1
030C   26 06                   BNE    PUTB3         ;NO CONTINUE SEARCH
030E   86 31                   LDAA   #'1'
0310   A7 00                   STAA   0,X
0312   20 2C                   BRA    PUTB8         ;GO PUT DISTANCE READING
0314   81 04        PUTB3      CMPA   #4            ;WAS IT 2
0316   26 06                   BNE    PUTB4         ;NO CONTINUE SEARCH
0318   86 32                   LDAA   #'2'
031A   A7 00                   STAA   0,X
031C   20 22                   BRA    PUTB8         ;GO PUT DISTANCE READING
031E   81 10        PUTB4      CMPA   #010H         ;WAS IT 4
0320   26 06                   BNE    PUTB5         ;NO CONTINUE SEARCH
0322   86 34                   LDAA   #'4'
0324   A7 00                   STAA   0,X
0326   20 18                   BRA    PUTB8         ;GO PUT DISTANCE READING
0328   81 20        PUTB5      CMPA   #020H         ;WAS IT 5
032A   26 06                   BNE    PUTB6         ;NO CONTINUE SEARCH
032C   86 35                   LDAA   #'5'
032E   A7 00                   STAA   0,X
0330   20 0E                   BRA    PUTB8         ;GO PUT DISTANCE READING
0332   81 40        PUTB6      CMPA   #040H         ;WAS IT 6
0334   26 06                   BNE    PUTB7         ;NO CONTINUE SEARCH
0336   86 36                   LDAA   #'6'
0338   A7 00                   STAA   0,X
033A   20 04                   BRA    PUTB8         ;GO PUT DISTANCE READING
033C   86 2A        PUTB7      LDAA   #'*'
033E   A7 00                   STAA   0,X
0340   B6 BE F2     PUTB8      LDAA   SONDATRB      ;GET THE DISTANCE READING
0343   CE 05 4C                LDX    #LNBREADING   ;POINT TO THE LINE POSITION
0346   BD ED 5F                JSR    SONPRINT      ;CONVERT THE READING TO DECIMAL
                                                    ;AND PUT IT IN THE LINE BUFFER
0349   39                      RTS                  ;RETURN TO CALLER
                    ;
                    ;
                    ;
                    ;
                    ;
                    ;
                    ;      SUBROUTINE:  PUTC        PUT SONAR C SELECTED IN LINE BUFFER
034A   CE 05 52     PUTC       LDX    #LNCTRANS     ;POINT TO LINE POSITION
034D   B6 BE F3                LDAA   SONDATSC      ;GET THE SELECTED TRANSDUCER #
0350   81 01                   CMPA   #1            ;WAS IT 0
0352   26 06                   BNE    PUTC2         ;NO CONTINUE SEARCH
0354   86 30                   LDAA   #'0'
0356   A7 00                   STAA   0,X
0358   20 36                   BRA    PUTC8         ;GO PUT DISTANCE READING
035A   81 02        PUTC2      CMPA   #2            ;WAS IT 1
035C   26 06                   BNE    PUTC3         ;NO CONTINUE SEARCH
035E   86 31                   LDAA   #'1'
0360   A7 00                   STAA   0,X
0362   20 2C                   BRA    PUTC8         ;GO PUT DISTANCE READING
0364   81 04        PUTC3      CMPA   #4            ;WAS IT 2
```

```
0366  26 06                    BNE   PUTC4          ;NO CONTINUE SEARCH
0368  86 32                    LDAA  #'2'
036A  A7 00                    STAA  0,X
036C  20 22                    BRA   PUTC8          ;GO PUT DISTANCE READING
036E  81 10        PUTC4       CMPA  #010H          ;WAS IT 4
0370  26 06                    BNE   PUTC5          ;NO CONTINUE SEARCH
0372  86 34                    LDAA  #'4'
0374  A7 00                    STAA  0,X
0376  20 18                    BRA   PUTC8          ;GO PUT DISTANCE READING
0378  81 20        PUTC5       CMPA  #020H          ;WAS IT 5
037A  26 06                    BNE   PUTC6          ;NO CONTINUE SEARCH
037C  86 35                    LDAA  #'5'
037E  A7 00                    STAA  0,X
0380  20 0E                    BRA   PUTC8          ;GO PUT DISTANCE READING
0382  81 40        PUTC6       CMPA  #040H          ;WAS IT 6
0384  26 06                    BNE   PUTC7          ;NO CONTINUE SEARCH
0386  86 36                    LDAA  #'6'
0388  A7 00                    STAA  0,X
038A  20 04                    BRA   PUTC8          ;GO PUT DISTANCE READING
038C  86 2A        PUTC7       LDAA  #'*'
038E  A7 00                    STAA  0,X
0390  B6 BE F4     PUTC8       LDAA  SONDATRC       ;GET THE DISTANCE READING
0393  CE 05 53                 LDX   #LNCREADING    ;POINT TO THE LINE POSITION
0396  BD ED 5F                 JSR   SONPRINT       ;CONVERT THE READING TO DECIMAL
                                                    ;AND PUT IT IN THE LINE BUFFER
0399  39                       RTS                  ;RETURN TO CALLER
                   ;
                   ;
                   ;
                   ;
                   ;
                   ;
                   ;       SUBROUTINE:  PUTD        PUT SONAR D SELECTED IN LINE BUFFER
039A  CE 05 59     PUTD        LDX   #LNDTRANS      ;POINT TO LINE POSITION
039D  B6 BE F5                 LDAA  SONDATSD       ;GET THE SELECTED TRANSDUCER #
03A0  81 01                    CMPA  #1             ;WAS IT 0
03A2  26 06                    BNE   PUTD2          ;NO CONTINUE SEARCH
03A4  86 30                    LDAA  #'0'
03A6  A7 00                    STAA  0,X
03A8  20 36                    BRA   PUTD8          ;GO PUT DISTANCE READING
03AA  81 02        PUTD2       CMPA  #2             ;WAS IT 1
03AC  26 06                    BNE   PUTD3          ;NO CONTINUE SEARCH
03AE  86 31                    LDAA  #'1'
03B0  A7 00                    STAA  0,X
03B2  20 2C                    BRA   PUTD8          ;GO PUT DISTANCE READING
03B4  81 04        PUTD3       CMPA  #4             ;WAS IT 2
03B6  26 06                    BNE   PUTD4          ;NO CONTINUE SEARCH
03B8  86 32                    LDAA  #'2'
03BA  A7 00                    STAA  0,X
03BC  20 22                    BRA   PUTD8          ;GO PUT DISTANCE READING
03BE  81 10        PUTD4       CMPA  #010H          ;WAS IT 4
03C0  26 06                    BNE   PUTD5          ;NO CONTINUE SEARCH
```

```
03C2  86 34                    LDAA   #'4'
03C4  A7 00                    STAA   0,X
03C6  20 18                    BRA    PUTD8          ;GO PUT DISTANCE READING
03C8  81 20        PUTD5       CMPA   #020H          ;WAS IT 5
03CA  26 06                    BNE    PUTD6          ;NO CONTINUE SEARCH
03CC  86 35                    LDAA   #'5'
03CE  A7 00                    STAA   0,X
03D0  20 0E                    BRA    PUTD8          ;GO PUT DISTANCE READING
03D2  81 40        PUTD6       CMPA   #040H          ;WAS IT 6
03D4  26 06                    BNE    PUTD7          ;NO CONTINUE SEARCH
03D6  86 36                    LDAA   #'6'
03D8  A7 00                    STAA   0,X
03DA  20 04                    BRA    PUTD8          ;GO PUT DISTANCE READING
03DC  86 2A        PUTD7       LDAA   #'*'
03DE  A7 00                    STAA   0,X
03E0  86 BE F6     PUTD8       LDAA   SONDATRD       ;GET THE DISTANCE READING
03E3  CE 05 5A                 LDX    #LNDREADING    ;POINT TO THE LINE POSITION
03E6  BD ED 5F                 JSR    SONPRINT       ;CONVERT THE READING TO DECIMAL
                                                     ;AND PUT IT IN THE LINE BUFFER
03E9  39                       RTS                   ;RETURN TO CALLER
                   ;
                   ;
                   ;       SUBROUTINE:  PUTLINE      PUT LINE BUFFER IN SPOOLER BUFFER
03EA  CE 05 25     PUTLINE     LDX    #LNSTART       ;POINT TO START OF LINE BUFFER
03ED  FF BF CC                 STX    ADDL
03F0  CE 05 65                 LDX    #LNEND+6       ;POINT TO END OF LINE BUFFER
03F3  FF BF CE                 STX    ADDH
03F6  FE 05 6C                 LDX    SPBUFNX        ;POINT TO POSITION OF SPOOLER BUFFER
03F9  FF BF CA                 STX    ADR
03FC  BD E6 46                 JSR    MOVE1          ;MOVE THE LINE
03FF  39                       RTS
                   ;
                   ;
                   ;
                   ;
                   ;       SUBROUTINE:  DECBLEFT     DECREMENT BY 64  THE AMOUNT LEFT IN
                   ;                                 THE SPOOLER BUFFER
                   ;
0400  FE 05 6A     DECBLEFT    LDX    BUFLEFT
0403  C6 40                    LDAB   #64
0405  3F                       SWI
0406  0E                       FCB    00EH
0407  FF 05 6A                 STX    BUFLEFT
040A  39                       RTS
                   ;
                   ;
                   ;
                   ;
                   ;
                   ;
                   ;       SUBROUTINE:  ADDLEFTPR    ADD 64 TO THE NUMBER LEFT TO PRINT
                   ;
```

```
                        ;
                        ;
040B  FE 05 66          ADDLEFTPR     LDX    LEFTPR
040E  C6 40                           LDAB   #64
0410  3F                              SWI
0411  0A                              FCB    00AH
0412  FF 05 66                        STX    LEFTPR
0415  39                              RTS
                        ;
                        ;
                        ;
                        ;
                        ;
                        ;       SUBROUTINE:   ADDBUFNX        ADD 64 TO THE NEXT BUFFER POINTER
                        ;
                        ;
0416  FE 05 6C          ADDBUFNX      LDX    SPBUFNX         ;GET THE PRESENT 'NEXT LINE'
                                                             ;POINTER
0419  C6 40                           LDAB   #040H           ;ELSE ADD 64 TO THE POINTER
041B  3F                              SWI
041C  0A                              FCB    00AH
041D  8C A0 00                        CPX    #SPBUFEND+1     ;IS IT THE END OF THE BUFFER?
0420  27 04                           BEQ    ADDBUF2         ;IF YES RESET TO START OF BUFFER
0422  FF 05 6C                        STX    SPBUFNX         ;STORE THE NEW POINTER
0425  39                              RTS                    ;RETURN TO CALLER
0426  CE 20 00          ADDBUF2       LDX    #SPBUFSTAR      ;POINT TO THE START OF THE BUFFER
0429  FF 05 6C                        STX    SPBUFNX         ;STORE THE NEW POINTER
042C  39                              RTS                    ;RETURN TO CALLER
                        ;
                        ;
                        ;
                        ;
                        ;
                        ;       SUBROUTINE:   SONSWITCH       SWITCHES THE SELECTED SONAR
                        ;                             TRANSDUCERS IN A PATTERN CONTAINED IN A
                        ;                             USER DEFINED TABLE.  BEFORE ENTRY, SONCHANGE
                        ;                             MUST BE $55
                        ;
042D  FE 04 5B          SONSWITCH     LDX    PTABNEXT        ;GET POINTER TO NEXT TABLE ENTRY
0430  A6 00                           LDAA   0,X             ;GET TABLE ENTRY FOR A SONAR
0432  B7 BE E2                        STAA   SONNEXA         ;STORE THE TRANSDUCER SELECT BYTE
0435  A6 01                           LDAA   1,X             ;GET TABLE ENTRY FOR B SONAR
0437  B7 BE E3                        STAA   SONNEXB         ;STORE THE TRANSDUCER SELECT BYTE
043A  A6 02                           LDAA   2,X             ;GET TABLE ENTRY FOR C SONAR
043C  B7 BE E4                        STAA   SONNEXC         ;STORE THE TRANSDUCER SELECT BYTE
043F  A6 03                           LDAA   3,X             ;GET TABLE ENTRY FOR D SONAR
0441  B7 BE E5                        STAA   SONNEXD         ;STORE THE TRANSDUCER SELECT BYTE
0444  7F BE E1                        CLR    SONCHANGE       ;TELL TICHAN2 TO CHANGE THE SONARS
0447  8C 04 E9          SONEND        CPX    #PTAB2END       ;IS THIS THE LAST OF THE TABLE?
044A  26 07                           BNE    SONSW2          ;IF NO THEN BRANCH
044C  CE 04 BD          SONEND2       LDX    #PTAB2          ;ELSE RESET TO START OF TABLE
044F  FF 04 5B                        STX    PTABNEXT        ;STORE THE POINTER
```

```
0452  39                          RTS                 ;AND RETURN TO CALLER
0453  08          SONSW2          INX                 ;POINT TO NEXT TABLE ENTRY
0454  08                          INX
0455  08                          INX
0456  08                          INX
0457  FF 04 5B                    STX   PTABNEXT      ;STORE THE POINTER
045A  39                          RTS                 ;RETURN TO CALLER
045B  04 BD       PTABNEXT        FDB   PTAB2
045D  01 00 00 00 PTAB1           FCB   1,0,0,0
0461  00 01 00 00                 FCB   0,1,0,0
0465  00 00 01 00                 FCB   0,0,1,0
0469  00 00 00 01                 FCB   0,0,0,1
046D  02 00 00 00                 FCB   2,0,0,0
0471  00 02 00 00                 FCB   0,2,0,0
0475  00 00 02 00                 FCB   0,0,2,0
0479  00 00 00 02                 FCB   0,0,0,2
047D  04 00 00 00                 FCB   4,0,0,0
0481  00 04 00 00                 FCB   0,4,0,0
0485  00 00 04 00                 FCB   0,0,4,0
0489  00 00 00 04                 FCB   0,0,0,4
048D  10 00 00 00                 FCB   16,0,0,0
0491  00 10 00 00                 FCB   0,16,0,0
0495  00 00 10 00                 FCB   0,0,16,0
0499  00 00 00 10                 FCB   0,0,0,16
049D  20 00 00 00                 FCB   32,0,0,0
04A1  00 20 00 00                 FCB   0,32,0,0
04A5  00 00 20 00                 FCB   0,0,32,0
04A9  00 00 00 20                 FCB   0,0,0,32
04AD  40 00 00 00                 FCB   64,0,0,0
04B1  00 40 00 00                 FCB   0,64,0,0
04B5  00 00 40 00                 FCB   0,0,64,0
04B9  00 00 00 40 PTAB1END        FCB   0,0,0,64
04BD  01 00 01 00 PTAB2           FCB   1,0,1,0
04C1  00 01 00 01                 FCB   0,1,0,1
04C5  02 00 02 00                 FCB   2,0,2,0
04C9  00 02 00 02                 FCB   0,2,0,2
04CD  04 00 04 00                 FCB   4,0,4,0
04D1  00 04 00 04                 FCB   0,4,0,4
04D5  10 00 10 00                 FCB   16,0,16,0
04D9  00 10 00 10                 FCB   0,16,0,16
04DD  20 00 20 00                 FCB   32,0,32,0
04E1  00 20 00 20                 FCB   0,32,0,32
04E5  40 00 40 00                 FCB   64,0,64,0
04E9  00 40 00 40 PTAB2END        FCB   0,64,0,64
04ED  01 02 04 00 PTAB3           FCB   1,2,4,0
04F1  02 04 00 01                 FCB   2,4,0,1
04F5  04 00 01 02                 FCB   4,0,1,2
04F9  00 01 02 04                 FCB   0,1,2,4
04FD  10 20 40 00                 FCB   16,32,64,0
0501  20 40 00 10                 FCB   32,64,0,16
0505  40 00 10 20                 FCB   64,0,16,32
0509  00 10 20 40 PTAB3END        FCB   0,16,32,64
```

```
050D   01 01 01 01   PTAB4        FCB    1,1,1,1
0511   02 02 02 02                FCB    2,2,2,2
0515   04 04 04 04                FCB    4,4,4,4
0519   10 10 10 10                FCB    16,16,16,16
051D   20 20 20 20                FCB    32,32,32,32
0521   40 40 40 40   PTAB4END     FCB    64,64,64,64
                     ;       THE FOLLOWING FORMAT IS USED FOR THE DATA FILE:
                     ;       /time/fw/lw1/lw2/rw1/rw2/A#___/B#___/C#___/D#___/ <CR> <LF>
                     ;       WHERE time    = TENTH'S OF SECONDS COUNT - 2 BYTES
                     ;             fw      = FRONT WHEEL POSITION     - 1 BYTE
                     ;             lw#,rw# = REAR WHEEL COUNTS        - 2 BYTES EA.
                     ;             A#___   = SONAR NUMBER AND READING - 4 BYTES EA.
                     ;
                     ;
0525   09            LNSTART      FCB    09H
0526   2F            LNBUF        FCC    '/'
0527   74 69 6D 65   LNTIME        FCC    'time/'
052B   2F
052C   66 77 2F      LNFW         FCC    'fw/'
052F   62 6C 77 31   LNBLW1       FCC    'blw1/'
0533   2F
0534   66 6C 77 32   LNFLW2       FCC    'flw2/'
0538   2F
0539   62 72 77 31   LNBRW1       FCC    'brw1/'
053D   2F
053E   66 72 77 32   LNFRW2       FCC    'frw2/A'
0542   2F 41
0544   23            LNATRANS     FCC    '#'
0545   5F 5F 5F 5F   LNAREADING   FCC    '___/B'
0549   2F 42
054B   23            LNBTRANS     FCC    '#'
054C   5F 5F 5F 5F   LNBREADING   FCC    '___/C'
0550   2F 43
0552   23            LNCTRANS     FCC    '#'
0553   5F 5F 5F 5F   LNCREADING   FCC    '___/D'
0557   2F 44
0559   23            LNDTRANS     FCC    '#'
055A   5F 5F 5F 5F   LNDREADING   FCC    '___/'
055E   2F
055F   0D 0A 00 00   LNEND        FCB    0DH,0AH,0,0,0,0
0563   00 00
0565   00            MEXOFF       FCB    0
0566   00 00         LEFTPR       FDB    0
0568   20 00         NXCHPR       FDB    SPBUFSTAR
056A   80 00         BUFLEFT      FDB    08000H
056C   20 00         SPBUFNX      FDB    SPBUFSTAR
056E   20 00         SPBUFST      FDB    SPBUFSTAR
2000                              ORG    02000H
2000                 SPBUFSTAR    RMB    07FFFH
9FFF                 SPBUFEND     END

No error(s).
```

SYMBOL TABLE FOR FILE XTEND.A

A.C	0000	A.RX	0001	A.S	0000	A.TX	0001
ACIAT	0000	ADDBUF2	0426	ADDBUFNX	0416	ADUH	BFCE
ADDL	BFCC	ADDLEFTP	040B	ADR	BFCA	ASCIIL	E7EC
ASCIIR	E7F0	BUFLEFT	056A	CALLRDSO	012E	CANDATA	0126
DECBLEFT	0400	FWCOUNT	BEF7	INIT	ECFC	INTMASK	BEEE
INTPTMV	EBFB	IO	C000	LEFTPR	0566	LNAREADI	0545
LNATRANS	0544	LNBLWI	052F	LNBREADI	054C	LNBRWI	0539
LNBTRANS	054B	LNBUF	0526	LNCREADI	0553	LNCTRANS	0552
LNDREADI	055A	LNDTRANS	0559	LNEND	055F	LNFLW2	0534
LNFRW2	053E	LNFW	052C	LNSTART	0525	LNTIME	0527
LWCOUNT1	BEFD	LWCOUNT2	BEFF	MAININIT	0100	MEXOFF	0565
MORETIC	BEC7	MOVE1	E646	NXCHPR	0568	PTAB1	045D
PTAB1END	04B9	PTAB2	04BD	PTAB2END	04E9	PTAB3	04ED
PTAB3END	0509	PTAB4	050D	PTAB4END	0521	PTABNEXT	045B
PUT2HEX	0253	PUTA	02AA	PUTA2	02BA	PUTA3	02C4
PUTA4	02CE	PUTA5	02D8	PUTA6	02E2	PUTA7	02EC
PUTA8	02F0	PUTB	02FA	PUTB2	030A	PUTB3	0314
PUTB4	031E	PUTB5	0328	PUTB6	0332	PUTB7	033C
PUTB8	0340	PUTC	034A	PUTC2	035A	PUTC3	0364
PUTC4	036E	PUTC5	0378	PUTC6	0382	PUTC7	038C
PUTC8	0390	PUTD	039A	PUTD2	03AA	PUTD3	03B4
PUTD4	03BE	PUTD5	03C8	PUTD6	03D2	PUTD7	03DC
PUTD8	03E0	PUTFW	0262	PUTLINE	03EA	PUTLW	026C
PUTRW	028B	PUTTIME	0243	READSONA	EA54	RWCOUNT1	BEF9
RWCOUNT2	BEFB	SONCHANG	BEE1	SONDATRA	BEF0	SONDATRB	BEF2
SONDATRC	BEF4	SONDATRD	BEF6	SONDATSA	BEEF	SONDATSB	BEF1
SONDATSC	BEF3	SONDATSD	BEF5	SONEND	0447	SONEND2	044C
SONNEXA	BEE2	SONNEXB	BEE3	SONNEXC	BEE4	SONNEXD	BEE5
SONPRINT	ED5F	SONSW2	0453	SONSWITC	042D	SPBUFEND	9FFF
SPBUFNX	056C	SPBUFST	056E	SPBUFSTA	2000	TICTIME	BED9
TSTRX	019A	TSTRX2	01C5	TSTRX3	01AC	TSTRX4	01B7
TSTRX5	01C8	TSTRX6	01E5	TSTRX7	0202	TSTRX8	021F
TSTRX9	023C	TUSRAM	BC00	TWIDDLE	011E	UPNXCHPR	0189
XOFF	0013	XON	0011	XTEND	0121	XTEND2	0161
XTEND3	016C	XZERO	0000				

APPENDIX C

```
10 '
20 'DATE: 25 OCT 84
30 '
40 '************ M A P P E R **********
50 '
60 'THIS PROGRAM IS DESIGNED TO RUN ON A TRS-80 COLOR COMPUTER
70 'IT IS WRITTEN IN MICROSOFT DISK EXTENDED COLOR BASIC
80 'THE PURPOSE OF THIS PROGRAM IS TO TRANSFORM SONAR READINGS
85 'FROM THE AFIT ROBOT MARRS-1 INTO GRAPHICS FORMAT
90 'THE TEST ROOM IS 13' X 22' AND EACH PIXEL REPRESENTS 0.1 FT
100 'PROGRAM CONCEIVED AND WRITTEN BY CAPT HUBERT G. SCHNEIDER III
110 '
120 '
130 '
140 '
150 'MEMORY INITIALIZATION
160 CLEAR1000,&H6FFF:PCLEAR8:PMODE4,1:DEFUSR0 = &H7000
170 LOADM"ANDPAGE"
180 PMODE4,5:PCLS1:PMODE4,1:PCLS1
190 '
200 '
210 '
220 '
230 '
240 'GLOBAL DECLARATIONS
250 L1=0:L2=0:L3=0:L4=0:L5=0:R1=0:R2=0:R3=0:R4=0:R5=0:LW=0:RW=0
260 D=17.75:'DISTANCE BETWEEN REAR WHEELS IN INCHES
270 SN$="A0A4A1A5A2A6B0B4B1B5B2B6C0C4C1C5C2C6L0D4D1D5D2D6":' SONAR LOOKUP TABLE
280 C = 0:'COLOR
290 PI = 3.14159
300 '
310 'THE FOLLOWING FORMAT IS USED FOR THE DATA FILE:
320 '/time/fw/lw1/lw2/rw1/rw2/A#___/B#___/C#___/D#___/ <CR> <LF>
330 'WHERE time    = TENTH'S OF SECONDS COUNT - 2 BYTES
340 '      fw      = FRONT WHEEL DIRECTION    - 1 BYTE
350 '      lw#,rw# = REAR WHEEL COUNTS        - 2 BYTES EA.
360 '      A#___   = SONAR NUMBER AND READING - 4 BYTES EA.
370 '
380 'MAIN PROGRAM
390 '
400 '    GET INITIAL INFORMATION
410      GOSUB 1910
420 '
430 '    GET DRIVE NUMBERS
440      GOSUB1990
450 '
460 '    OPEN DATA FILE
470      GOSUB 2080
480 '
490 '    READ IN DATA
```

```
500 '    PCLS1
510      SCREEN1,1
520          FOR I=1TO6
530          SD$=""
540          LINEINPUT #1,SD$
550          IF EOF(1)=-1 THEN 720 :'CHECK FOR END OF FILE
560              FOR J=1TO11
570              P1=INSTR(1,SD$,"/")
580              A$=LEFT$(SD$,P1-1)
590              ON J GOSUB 840,870,930,960,1000,1040,1080,1500,1500,1500,1500
600              SD$=RIGHT$(SD$,LEN(SD$)-P1)
610              NEXT J
620          NEXT I
630      Q=USR0(0) :'CALL ML ROUTINE "ANDPAGE"
640 '
650 '    Z$=INKEY$:IFZ$=""THEN322     :' THESE  LINES ARE FOR
660 '    IF Z$="S" THEN 330 ELSE 360  :' THE OPTION OF SAVING
670 '    SAVE PICTURE                 :' EACH INCREMENTAL
680 '    F$=TIME$+".BIN:"+DN$         :' PICTURE OF WHAT THE
690 '    GOSUB1830                    :' SONARS "SEE"
700      GOTO 490 :'CONTINUE
710 '
720 '    CLOSE DATA FILE
730      GOSUB 2120
740 '
750 '    SAVE COMPOSITE PICTURE
760      FOR X= 5 TO 8:PCOPY X TO X-4:NEXT X:F$=T1$+"#COMP/BIN:"+DN$
770      GOSUB1830
780 '
790 END
800 '**********END OF PROGRAM**********
810 '
820 '***********SUBROUTINES***********
830 '
840 'FIND FIRST DELIMITER IN DATA STRING ("/")
850 RETURN
860 '
870 'GET TIME
880 'TIC - COUNT FROM ROBOT
890 'TIME$ - DECIMAL COUNT
900 IF I=1 THEN TIME$=T1$+"#"+A$ ELSE RETURN
910 RETURN
920 '
930 'CONVERT FWCOUNT TO A VALUE
940 FW = VAL("&H"+A$) :RETURN
950 '
960 'CONVERT LWCOUNT1 TO A VALUE (LEFT WHEEL BACKWARDS)
970 LW=VAL("&H"+A$)
980 L1 = LW-L4:L4=LW:RETURN
990 '
1000 'CONVERT LWCOUNT2 TO A VALUE (LEFT WHEEL FORWARDS)
1010 LW=VAL("&H"+A$)
```

```
1020 L2 = LW-L5:L5=LW:RETURN
1030 '
1040 'CONVERT RWCOUNT1 TO A VALUE (RIGHT WHEEL BACKWARDS)
1050 RW=VAL("&H"+A$)
1060 R1= RW-R4:R4=RW:RETURN
1070 '
1080 'CONVERT RWCOUNT2 TO A VALUE (RIGHT WHEEL FORWARDS)
1090 RW=VAL("&H"+A$)
1100 R2 = RW-R5:R5=RW:GOSUB1110:PSET(X,Y,0):RETURN
1110 '
1120 'CALCULATE POISITION AND HEADING
1130 GOSUB1180 :'FIRST CALCULATE IN INCHES
1140 GOSUB1430 :'THEN CONERT TO GRAPHICS FORMAT
1150 XA=XB:YA=YB
1160 RETURN
1170 '
1180 '     DETERMINE HEADING & POSITION
1190 '     HEADING & POSITION ARE RELATIVE TO THE CENTER POINT BETWEEN THE WHEELS
1200 '     WHILE THE SONAR READINGS ARE RELATIVE TO THE CENTER OF THE ROBOT
1210 '     (XA,YA) - PREVIOUS POSITION
1220 '     (XB,YB) - CURRENT  POSITION
1230 '     HA & HB ARE IN RADIANS
1240 '     HA     - INITIAL  HEADING
1250 '     HB     - CURRENT  HEADING
1260 '     H      - GRAPHICS HEADING (0-1)
1270 '     D      - DISTANCE BETWEEN WHEELS ( 17.75" )
1280 '     *** NOTE ***
1290 '     FOR PURPOSES OF THIS TEST AND THESIS,
1300 '     THE UPPER LEVEL SONARS WILL REMAIN IN A FIXED POSITION
1310 '     DURING THE TEST (I.E. NO HEAD MOVEMENTS,
1320 '
1330 L3 = L2:R3 = R2
1340 DLR =L5-R5
1350 HB =(DLR/D) + HA
1360 HC=COS(HB):HS=SIN(HB)
1370 XB = XA +(((R3+L3)/2) * HC)
1380 YB = YA +(((R3+L3)/2) * HS)
1390 'NORMALIZE HEADING
1400 H = HB/(2*PI):IF H < 0 THEN H = 1 + H ELSE IF H=0 THEN H=1
1410 IF H>1 THEN H=H-1:GOTO 1410
1420 RETURN
1430 '     GET (X,Y)
1440 '     THIS ROUTINE CONVERTS THE (XB,YB) LOCATIONS INTO INTEGER NUMBERS
1445 '     SO THAT EACH PIXEL REPRESENTS 0.1 FT
1450 '     X OFFSET -> 17, Y OFFSET -> 30
1460 X=INT(((XB+(6*HC))*10)/12)+17
1470 Y=INT(((YB+(6*HS))*10)/12)+30
1480 RETURN
1490 '
1500 '     DISPLAY SONAR DATA
1510 A1$=LEFT$(A$,2):A2$=RIGHT$(A$,LEN(A$)-2)
1520 GOSUB1550:GOSUB1680:GOSUB1740
```

```
1530 RETURN
1540 '
1550 '     CALCULATE DIRECTION OF SONAR BEAM
1560 'A1$   - SONAR NUMBER
1570 'H - HEADING (0 - 1)
1580 'S1   - START ARC POSITION
1590 'S2   - STOP  ARC POSITION
1600 IF H=1 THEN H=0
1610 SN=INT((INSTR(1,SN$,A1$)/2))
1630 S1= -.025+(SN/24)+H
1640 S2=S1+ .05
1650 IF H=0 THEN H=1
1660 RETURN
1670 '
1680 '     CALCULATE RADIUS (RANGE OF TARGET)
1690 R= VAL(A2$)*10
1700 IF (R>75 OR R<18 OR R=255) THEN R = 0
1710 IF RIGHT$(A1$,1)="*" THEN R=0
1720 RETURN
1730 '
1740 '     DRAW SONAR ARC
1750 '     X  - X DIRECTION - GRAPHICS LOCATION
1760 '     Y  - Y DIRECTION - GRAPHICS LOCATION
1770 '     R  - RADIUS
1780 '     C  - COLOR
1790 IF S1<0 THEN CIRCLE(X,Y),R,C,1,S1+1,0:CIRCLE(X,Y),R,C,1,0,S2 ELSE CIRCLE(X,Y),R,C,1,S1,S2
1810 RETURN
1820 '
1830 '     SAVE SONAR PICTURE
1840 FR=FREE(DN):IF FR< 3 THEN 1850 ELSE 1870
1850 SOUND100,10:CLS:PRINT"     D I S K   F U L L  ! ! ! ! "
1855 PRINT"PLEASE CHANGE DISK  IN DRIVE    NUMBER "DN" AND PRESS ENTER TO  CONTINUE"
1860 Z$=INKEY$:IFZ$=""THEN1860 ELSE 1840
1870 SAVEM F$,&HE00,&H25FF,&H0000
1880 SCREEN1,1
1890 RETURN
1900 '
1910 '     GET INITIAL HEADING AND POSITION
1920 CLS:PRINT"PLEASE INPUT INITIAL HEADING ANDPOSITION OF ROBOT FOR THIS  TEST RUN."
1925 PRINT"POSITION IN TERMS OF (X,Y)"
1927 PRINT"WHERE X AND Y ARE TENTHS OF FEETAND HEADING IS BETWEEN  0 AND 1."
1930 INPUT"HEADING";H:HA=2*PI*H:IF HA=0 THEN HA=2*PI
1940 INPUT"POSITION X";X:INPUT"POSITION Y";Y:XA=1.2*X:YA=1.2*Y
1950 PRINT"INPUT DATA FILENAME":PRINT:LINEINPUT T1$:T$=T1$+"/DAT"
1960 R$=MID$(T1$,3,1):' GET ROOM CONFIGURATION NUMBER
1970 RETURN
1980 '
1990 '     GET DRIVE NUMBERS
2000 CLS:PRINT"            WELCOME":PRINT"  TO THE LAB OF MAKE BELIEVE!"
2010 PRINT:PRINT:PRINT
2020 PRINT"WHICH DRIVE HAS THE SONAR/OSE   DATA IN IT?"
2030 A$=INKEY$:IF A$=""THEN 2030
```

```
2040 A=VAL(A$): IF A= 0 THEN DN = 1:DRIVE(0):DN$="1" ELSE IF A=1 THEN DN = 0:DRIVE(1):DN$="0" ELSE 2030
2050 PRINT:PRINT"          THANK YOU"
2060 RETURN
2070 '
2080 '     OPEN FILE
2090 OPEN"I",#1,T$
2100 RETURN
2110 '
2120 '     CLOSE FILE
2130 CLOSE #1
2140 RETURN
2150 '
2160 '
2170 '
2180 '
2190 '
2200 '*****************************************************
2210 '*                                                   *
2220 '*        NAME: ANDPAGE                              *
2230 '*        WRITTEN IN 6809 MACHINE CODE               *
2240 '*        THIS ROUTINE MAKES A COMPOSITE OF MARS-1   *
2250 '*        SONAR/OSE DATA BY ANDING ONE PAG  .. GRAPHICS *
2260 '*        WITH ANOTHER.  THIS PROGRAM DES      ) RUN *
2270 '*        ON A TRS-80 COLOR COMPUTER                 *
2280 '*                                                   *
2290 '*****************************************************
2300 '         ORG     $7000
2310 '         PSHS    Y          *SAVE Y REGISTER
2320 '         LDX     #$E00      *START OF PAGE 1
2330 '         LDY     #$2600     *START OF PAGE 2
2340 ' LOOP    LDA     ,X+        *GET BYTE FROM PAGE 1
2350 '         ANDA    ,Y         *AND IT WITH BYTE FROM PAGE 2
2360 '         STA     ,Y+        *STORE BACK IN PAGE 2
2370 '         CMPX    #$2600     *DONE YET?
2380 '         BNE     LOOP       *IF NOT CONTINUE
2390 '         PULS    Y          *GET BACK Y
2400 '         RTS                *RETURN
2410 '         END
```


171

```
                ;*************************************************
                ;*                                               *
                ;*              APPENDIX  D                      *
                ;*                                               *
                ;*************************************************
                ;               FILE: NAVDEF.A
0000                    get navdef.a            ;NAV COMPUTER EQUATES AND SYS RAM USAGE
                ;
                ;       NAVDEF.A  DEFINES THE INPUT/OUTPUT AND SYSTEM RAM USAGE FOR
                ;       THE MARRS-1 NAVIGATION COMPUTER
                ;
BC00            TUSRAM  EQU 0BC00H              ;TOP OF USER STACK RAM (STACKS GROW DOWNWARD)
BE00            OSRAM   EQU TUSRAM+0200H        ;BASE ADDRESS FOR OPERATING SYSTEM RAM
BE00            USRSTAK EQU OSRAM               ;USER STACK
BE7F            BOS     EQU OSRAM+07FH          ;BOTTOM OF OPERATING SYSTEM STACK (BOS)
                ;
                ;
                ;
                ;       INPUT/OUTPUT EQUATE AREA
                ;
                ;
C000            IO      EQU 0C000H              ;BASE ADDRESS FOR ALL INPUT/OUTPUT
                ;
                ;
0000            ACIAT   EQU 0                   ;TERMINAL ACIA OFFSET FROM I/O BASE ADDRESS
0000            A.T     EQU ACIAT
0008            ACIAX   EQU 8                   ;XTRA ACIA OFFSET FROM I/O BASE ADDRESS
0008            A.X     EQU ACIAX
0010            ACIAL   EQU 16                  ;LASER ACIA OFFSET FROM I/O BASE ADDRESS
0010            A.L     EQU ACIAL
                ;
                ;
0018            PTMAB   EQU 24                  ;SONAR A&B TIMER OFFSET FROM I/O BASE ADDRESS
0018            T.AB    EQU PTMAB
0020            PTMCD   EQU 32                  ;SONAR C&D TIMER OFFSET FROM I/O BASE ADDRESS
0020            T.CD    EQU PTMCD
0028            PTMV    EQU 40                  ;VSW DRIVE/TIC TIMER OFFSET FROM I/O BASE ADDRESS
0028            T.V     EQU PTMV
0030            PTMF    EQU 48                  ;FRONT WHEEL TIMER OFFSET FROM I/O BASE ADDRESS
0030            T.F     EQU PTMF
0038            PTML    EQU 56                  ;LEFT WHEEL TIMER OFFSET FROM I/O BASE ADDRESS
0038            T.L     EQU PTML
0040            PTMR    EQU 64                  ;RIGHT WHEEL TIMER OFFSET FROM I/O BASE ADDRESS
0040            T.R     EQU PTMR
                ;
                ;
0048            PIAAB   EQU 72                  ;SONAR A&B TRANSDUCER SELECT PIA I/O OFFSET
0048            P.AB    EQU PIAAB
0050            PIACD   EQU 80                  ;SONAR C&D TRANSDUCER SELECT PIA I/O OFFSET
0050            P.CD    EQU PIACD
                ;
                ;
```

```
0001          A0      EQU 1          ;MASK BIT TO SELECT SONAR TRANSDUCER A0
0002          A1      EQU 2          ;MASK BIT TO SELECT SONAR TRANSDUCER A1
0004          A2      EQU 4          ;MASK BIT TO SELECT SONAR TRANSDUCER A2
0008          A3      EQU 8          ;MASK BIT TO SELECT SONAR TRANSDUCER A3
0010          A4      EQU 16         ;MASK BIT TO SELECT SONAR TRANSDUCER A4
0020          A5      EQU 32         ;MASK BIT TO SELECT SONAR TRANSDUCER A5
0040          A6      EQU 64         ;MASK BIT TO SELECT SONAR TRANSDUCER A6
0080          A7      EQU 128        ;MASK BIT TO SELECT SONAR TRANSDUCER A7
0001          B0      EQU 1          ;MASK BIT TO SELECT SONAR TRANSDUCER B0
0002          B1      EQU 2          ;MASK BIT TO SELECT SONAR TRANSDUCER B1
0004          B2      EQU 4          ;MASK BIT TO SELECT SONAR TRANSDUCER B2
0008          B3      EQU 8          ;MASK BIT TO SELECT SONAR TRANSDUCER B3
0010          B4      EQU 16         ;MASK BIT TO SELECT SONAR TRANSDUCER B4
0020          B5      EQU 32         ;MASK BIT TO SELECT SONAR TRANSDUCER B5
0040          B6      EQU 64         ;MASK BIT TO SELECT SONAR TRANSDUCER B6
0080          B7      EQU 128        ;MASK BIT TO SELECT SONAR TRANSDUCER B7
0001          C0      EQU 1          ;MASK BIT TO SELECT SONAR TRANSDUCER C0
0002          C1      EQU 2          ;MASK BIT TO SELECT SONAR TRANSDUCER C1
0004          C2      EQU 4          ;MASK BIT TO SELECT SONAR TRANSDUCER C2
0008          C3      EQU 8          ;MASK BIT TO SELECT SONAR TRANSDUCER C3
0010          C4      EQU 16         ;MASK BIT TO SELECT SONAR TRANSDUCER C4
0020          C5      EQU 32         ;MASK BIT TO SELECT SONAR TRANSDUCER C5
0040          C6      EQU 64         ;MASK BIT TO SELECT SONAR TRANSDUCER C6
0080          C7      EQU 128        ;MASK BIT TO SELECT SONAR TRANSDUCER C7
0001          D0      EQU 1          ;MASK BIT TO SELECT SONAR TRANSDUCER D0
0002          D1      EQU 2          ;MASK BIT TO SELECT SONAR TRANSDUCER D1
0004          D2      EQU 4          ;MASK BIT TO SELECT SONAR TRANSDUCER D2
0008          D3      EQU 8          ;MASK BIT TO SELECT SONAR TRANSDUCER D3
0010          D4      EQU 16         ;MASK BIT TO SELECT SONAR TRANSDUCER D4
0020          D5      EQU 32         ;MASK BIT TO SELECT SONAR TRANSDUCER D5
0040          D6      EQU 64         ;MASK BIT TO SELECT SONAR TRANSDUCER D6
0080          D7      EQU 128        ;MASK BIT TO SELECT SONAR TRANSDUCER D7
              ;
              ;
0000          ACIASTAT EQU 0         ;OFFSET FROM ACIA BASE FOR STATUS REGISTER
0000          A.S     EQU ACIASTAT
0000          ACIACR  EQU 0          ;OFFSET FROM ACIA BASE FOR CONTROL REGISTER
0000          A.C     EQU ACIACR
0001          ACIATX  EQU 1          ;OFFSET FROM AICA BASE FOR TRANSMIT REGISTER
0001          A.TX    EQU ACIATX
0001          ACIARX  EQU 1          ;OFFSET FROM ACIA BASE FOR RECEIVE REGISTER
0001          A.RX    EQU ACIARX
              ;
              ;
0001          PTMSTAT EQU 1          ;OFFSET FROM PTM BASE FOR STATUS REGISTER
0001          T.S     EQU PTMSTAT
              ;
              ;
0000          PTMCR1  EQU 0          ;OFFSET FROM PTM BASE FOR TIMER 1 CONTROL REGISTER
0000          T.C1    EQU PTMCR1
0001          PTMCR2  EQU 1          ;OFFSET FROM PTM BASE FOR TIMER 2 CONTROL REGISTER
0001          T.C2    EQU PTMCR2
```

```
0000        PTMCR3   EQU 0          ;OFFSET FROM PTM BASE FOR TIMER 3 CONTROL REGISTER
0000        T.C3     EQU PTMCR3
            ;
            ;
0002        T.LATCH1 EQU 2          ;PTM COUNTER LATCH FOR TIMER 1
0004        T.LATCH2 EQU 4          ;PTM COUNTER LATCH FOR TIMER 2
0006        T.LATCH3 EQU 6          ;PTM COUNTER LATCH FOR TIMER 3
            ;
            ;
0002        T.CNT1   EQU 2          ;PTM COUNTER COUNT FOR TIMER 1
0004        T.CNT2   EQU 4          ;PTM COUNTER COUNT FOR TIMER 2
0006        T.CNT3   EQU 6          ;PTM COUNTER COUNT FOR TIMER 3
            ;
            ;
0001        PIACRA   EQU 1          ;PIA A CONTROL REGISTER OFFSET FROM PIA BASE
0001        P.CRA    EQU PIACRA
0003        PIACRB   EQU 3          ;PIA B CONTROL REGISTER OFFSET FROM PIA BASE
0003        P.CRB    EQU PIACRB
0001        PIACRC   EQU 1          ;PIA C CONTROL REGISTER OFFSET FROM PIA BASE
0001        P.CRC    EQU PIACRC
0003        PIACRD   EQU 3          ;PIA D CONTROL REGISTER OFFSET FROM PIA BASE
0003        P.CRD    EQU PIACRD
            ;
            ;
0001        PIASTATA EQU 1          ;PIA A STATUS REGISTER OFFSET FROM PIA BASE
0001        P.SRA    EQU PIASTATA
0003        PIASTATB EQU 3          ;PIA B STATUS REGISTER OFFSET FROM PIA BASE
0003        P.SRB    EQU PIASTATB
0001        PIASTATC EQU 1          ;PIA C STATUS REGISTER OFFSET FROM PIA BASE
0001        P.SRC    EQU PIASTATC
0003        PIASTATD EQU 3          ;PIA D STATUS REGISTER OFFSET FROM PIA BASE
0003        P.SRD    EQU PIASTATD
            ;
            ;
0000        PIADDA   EQU 0          ;PIA A DATA DIRECTION REGISTER OFFSET FROM PIA BASE
0000        P.DDA    EQU PIADDA
0002        PIADDB   EQU 2          ;PIA B DATA DIRECTION REGISTER OFFSET FROM PIA BASE
0002        P.DDB    EQU PIADDB
0000        PIADDC   EQU 0          ;PIA C DATA DIRECTION REGISTER OFFSET FROM PIA BASE
0000        P.DDC    EQU PIADDC
0002        PIADDD   EQU 2          ;PIA D DATA DIRECTION REGISTER OFFSET FROM PIA BASE
0002        P.DDD    EQU PIADDD
            ;
            ;
0000        PIAPA    EQU 0          ;PIA A PERIPHERAL REGISTER OFFSET FROM PIA BASE
0000        P.PRA    EQU PIAPA
0002        PIAPB    EQU 2          ;PIA B PERIPHERAL REGISTER OFFSET FROM PIA BASE
0002        P.PRB    EQU PIAPB
0000        PIAPC    EQU 0          ;PIA C PERIPHERAL REGISTER OFFSET FROM PIA BASE
0000        P.PRC    EQU PIAPC
0002        PIAPD    EQU 2          ;PIA D PERIPHERAL REGISTER OFFSET FROM PIA BASE
0002        P.PRD    EQU PIAPD
```

```
                ;
                ;
                ;
                ;       SYSTEM RAM USAGE EQUATE AREA
                ;
                ;
BE80            CRACIAT  EQU OSRAM+080H        ;COPY OF CONTROL REGISTER BYTE FOR ACIAT
BE81            CRACIAX  EQU OSRAM+081H        ;COPY OF CONTROL REGISTER BYTE FOR ACIAX
BE82            CRACIAL  EQU OSRAM+082H        ;COPY OF CONTROL REGISTER BYTE FOR ACIAL
                ;
                ;
BE83            CRPTMAB1 EQU OSRAM+083H        ;COPY OF CONTROL REGISTER BYTE FOR PTMAB1
BE84            CRPTMAB2 EQU OSRAM+084H        ;COPY OF CONTROL REGISTER BYTE FOR PTMAB2
BE85            CRPTMAB3 EQU OSRAM+085H        ;COPY OF CONTROL REGISTER BYTE FOR PTMAB3
BE86            CRPTMCD1 EQU OSRAM+086H        ;COPY OF CONTROL REGISTER BYTE FOR PTMCD1
BE87            CRPTMCD2 EQU OSRAM+087H        ;COPY OF CONTROL REGISTER BYTE FOR PTMCD2
BE88            CRPTMCD3 EQU OSRAM+088H        ;COPY OF CONTROL REGISTER BYTE FOR PTMCD3
BE89            CRPTMV1  EQU OSRAM+089H        ;COPY OF CONTROL REGISTER BYTE FOR PTMV1
BE8A            CRPTMV2  EQU OSRAM+08AH        ;COPY OF CONTROL REGISTER BYTE FOR PTMV2
BE8B            CRPTMV3  EQU OSRAM+08BH        ;COPY OF CONTROL REGISTER BYTE FOR PTMV3
BE8C            CRPTMF1  EQU OSRAM+08CH        ;COPY OF CONTROL REGISTER BYTE FOR PTMF1
BE8D            CRPTMF2  EQU OSRAM+08DH        ;COPY OF CONTROL REGISTER BYTE FOR PTMF2
BE8E            CRPTMF3  EQU OSRAM+08EH        ;COPY OF CONTROL REGISTER BYTE FOR PTMF3
BE8F            CRPTML1  EQU OSRAM+08FH        ;COPY OF CONTROL REGISTER BYTE FOR PTML1
BE90            CRPTML2  EQU OSRAM+090H        ;COPY OF CONTROL REGISTER BYTE FOR PTML2
BE91            CRPTML3  EQU OSRAM+091H        ;COPY OF CONTROL REGISTER BYTE FOR PTML3
BE92            CRPTMR1  EQU OSRAM+092H        ;COPY OF CONTROL REGISTER BYTE FOR PTMR1
BE93            CRPTMR2  EQU OSRAM+093H        ;COPY OF CONTROL REGISTER BYTE FOR PTMR2
BE94            CRPTMR3  EQU OSRAM+094H        ;COPY OF CONTROL REGISTER BYTE FOR PTMR3
                ;
                ;
BE95            CRPIAA   EQU OSRAM+095H        ;COPY OF CONTROL REGISTER BYTE FOR PIAA
BE96            CRPIAB   EQU OSRAM+096H        ;COPY OF CONTROL REGISTER BYTE FOR PIAB
BE97            CRPIAC   EQU OSRAM+097H        ;COPY OF CONTROL REGISTER BYTE FOR PIAC
BE98            CRPIAD   EQU OSRAM+098H        ;COPY OF CONTROL REGISTER BYTE FOR PIAD
                ;
                ;
BE99            BCPTMAB1 EQU OSRAM+099H        ;BINARY COUNT PRELOAD FOR PTMAB1
BE9B            BCPTMAB2 EQU OSRAM+09BH        ;BINARY COUNT PRELOAD FOR PTMAB2
BE9D            BCPTMAB3 EQU OSRAM+09DH        ;BINARY COUNT PRELOAD FOR PTMAB3
BE9F            BCPTMCD1 EQU OSRAM+09FH        ;BINARY COUNT PRELOAD FOR PTMCD1
BEA1            BCPTMCD2 EQU OSRAM+0A1H        ;BINARY COUNT PRELOAD FOR PTMCD2
BEA3            BCPTMCD3 EQU OSRAM+0A3H        ;BINARY COUNT PRELOAD FOR PTMCD3
BEA5            BCPTMV1  EQU OSRAM+0A5H        ;BINARY COUNT PRELOAD FOR PTMV1
BEA7            BCPTMV2  EQU OSRAM+0A7H        ;BINARY COUNT PRELOAD FOR PTMV2
BEA9            BCPTMV3  EQU OSRAM+0A9H        ;BINARY COUNT PRELOAD FOR PTMV3
BEAB            BCPTMF1  EQU OSRAM+0ABH        ;BINARY COUNT PRELOAD FOR PTMF1
BEAD            BCPTMF2  EQU OSRAM+0ADH        ;BINARY COUNT PRELOAD FOR PTMF2
BEAF            BCPTMF3  EQU OSRAM+0AFH        ;BINARY COUNT PRELOAD FOR PTMF3
BEB1            BCPTML1  EQU OSRAM+0B1H        ;BINARY COUNT PRELOAD FOR PTML1
BEB3            BCPTML2  EQU OSRAM+0B3H        ;BINARY COUNT PRELOAD FOR PTML2
BEB5            BCPTML3  EQU OSRAM+0B5H        ;BINARY COUNT PRELOAD FOR PTML3
```

```
BEB7        BCPTMR1  EQU OSRAM+0B7H      ;BINARY COUNT PRELOAD FOR PTMR1
BEB9        BCPTMR2  EQU OSRAM+0B9H      ;BINARY COUNT PRELOAD FOR PTMR2
BEBB        BCPTMR3  EQU OSRAM+0BBH      ;BINARY COUNT PRELOAD FOR PTMR3
            ;
            ;
BEBD        SONARSLA EQU OSRAM+0BDH      ;SONAR SELECT BYTE WRITTEN TO PIA A
BEBD        SSLA     EQU SONARSLA
BEBE        SONARSLB EQU OSRAM+0BEH      ;SONAR SELECT BYTE WRITTEN TO PIA B
BEBE        SSLB     EQU SONARSLB
BEBF        SONARSLC EQU OSRAM+0BFH      ;SONAR SELECT BYTE WRITTEN TO PIA C
BEBF        SSLC     EQU SONARSLC
BEC0        SONARSLD EQU OSRAM+0C0H      ;SONAR SELECT BYTE WRITTEN TO PIA D
BEC0        SSLD     EQU SONARSLD
            ;
            ;
BEC1        SONARA   EQU OSRAM+0C1H      ;LAST SONAR A READING
BEC2        SONARB   EQU OSRAM+0C2H      ;LAST SONAR B READING
BEC3        SONARC   EQU OSRAM+0C3H      ;LAST SONAR C READING
BEC4        SONARD   EQU OSRAM+0C4H      ;LAST SONAR D READING
            ;
            ;
BEC5        SONTIME  EQU OSRAM+0C5H      ;TIC TIME OF LAST SONAR READING
            ;
BEC7        MORETIC  EQU OSRAM+0C7H      ;JUMP VECTOR FOR EXTENDED TIC INTERUPT ROUTINE
            ;
BECA        TIMEZERO EQU OSRAM+0CAH      ;TIME ZERO FROM DRIVE COMPUTER (15 BCD LS NIBBLES)
            ;
BED9        TICTIME  EQU OSRAM+0D9H      ;ONE TENTH SECOND TIC TIME COUNT SINCE TIME ZERO
            ;
BEDB        IOOFFSET EQU OSRAM+0DBH      ;OFFSET INTO I/O AREA FOR PORT INITIALIZATION
            ;
BEDC        POWERUP  EQU OSRAM+0DCH      ;SET TO $0 IF POWER UP NOT COMPLETE ELSE $55
            ;
BEDD        RAMSIZEL EQU OSRAM+0DDH      ;LOWER LIMIT OF RAM IN SYSTEM
            ;
BEDF        RAMSIZEH EQU OSRAM+0DFH      ;HIGH  LIMIT OF RAM IN SYSTEM
            ;
BEE1        SONCHANGE EQU OSRAM+0E1H     ;CHANGE SELECTED SONARS IF 00 ELSE INTERRUPT
                                         ;HANDLER SETS THIS BYTE TO 055H
BEE2        SONNEXA EQU OSRAM+0E2H       ;NEXT SONAR SELECT BYTE WRITTEN TO PIA A
BEE2        NSSLA    EQU SONNEXA
BEE3        SONNEXB EQU OSRAM+0E3H       ;NEXT SONAR SELECT BYTE WRITTEN TO PIA B
BEE3        NSSLB    EQU SONNEXB
BEE4        SONNEXC EQU OSRAM+0E4H       ;NEXT SONAR SELECT BYTE WRITTEN TO PIA C
BEE4        NSSLC    EQU SONNEXC
BEE5        SONNEXD EQU OSRAM+0E5H       ;NEXT SONAR SELECT BYTE WRITTEN TO PIA D
BEE5        NSSLD    EQU SONNEXD
BEE6        TICTEMP0 EQU OSRAM+0E6H      ;TEMPORARY REGISTER FOR TIC INTERRUPT
BEE8        TICTEMP1 EQU OSRAM+0E8H      ;TEMPORARY REGISTER FOR TIC INTERRUPT
BEEA        TICTEMP2 EQU OSRAM+0EAH      ;TEMPORARY REGISTER FOR TIC INTERRUPT
BEEC        TICTEMP3 EQU OSRAM+0ECH      ;TEMPORARY REGISTER FOR TIC INTERRUPT
            ;
```

```
BEEE    INTMASK  EQU OSRAM+0EEH        ;INTERRUPTS MASKED IF $FF ELSE NOT MASKED
                                       ;IF $00
        ;
BEEF    SONDATSA EQU OSRAM+0EFH        ;SONAR SELECT BYTE FROM READSONAR ROUTINE
BEF0    SONDATRA EQU OSRAM+0F0H        ;SONAR READING FROM READSONAR ROUTINE
BEF1    SONDATSB EQU OSRAM+0F1H        ;SONAR SELECT BYTE FROM READSONAR ROUTINE
BEF2    SONDATRB EQU OSRAM+0F2H        ;SONAR READING FROM READSONAR ROUTINE
BEF3    SONDATSC EQU OSRAM+0F3H        ;SONAR SELECT BYTE FROM READSONAR ROUTINE
BEF4    SONDATRC EQU OSRAM+0F4H        ;SONAR READING FROM READSONAR ROUTINE
BEF5    SONDATSD EQU OSRAM+0F5H        ;SONAR SELECT BYTE FROM READSONAR ROUTINE
BEF6    SONDATRD EQU OSRAM+0F6H        ;SONAR READING FROM READSONAR ROUTINE
        ;
BEF7    OSEREG       EQU    OSRAM+0F7H     ;BEGIN ADDRESS OF WHEEL COUNTS
BEF7    FWCOUNT      EQU    OSEREG         ;FRONT WHEEL ABSOLUTE COUNT
BEF9    RWCOUNT1     EQU    OSEREG+2       ;RIGHT WHEEL PTM COUNTER 1 COUNTS
BEFB    RWCOUNT2     EQU    OSEREG+4       ;RIGHT WHEEL PTM COUNTER 2 COUNTS
BEFD    LWCOUNT1     EQU    OSEREG+6       ;LEFT  WHEEL PTM COUNTER 1 COUNTS
BEFF    LWCOUNT2     EQU    OSEREG+8       ;LEFT  WHEEL PTM COUNTER 2 COUNTS
        ;
        ;
        ;
BF01    OSEMOD       EQU    OSEREG+10      ;MODULO OF WHEEL COUNTS < 1°
        ;
        ;
        ;
BF01    RWMOD1       EQU    OSEMOD         ;RIGHT WHEEL PTM 1 MODULO COUNT
BF02    RWMOD2       EQU    OSEMOD+1       ;RIGHT WHEEL PTM 2 MODULO COUNT
BF03    LWMOD1       EQU    OSEMOD+2       ;LEFT  WHEEL PTM 1 MODULO COUNT
BF04    LWMOD2       EQU    OSEMOD+3       ;LEFT  WHEEL PTM 2 MODULO COUNT
        ;
        ;
BF05    COLD     EQU    OSRAM+0105H    ;JUMP VECTOR FOR C (COLD START) COMMAND
BF08    WARM     EQU    OSRAM+0108H    ;JUMP VECTOR FOR W (WARM START) COMMAND
BF0B    ODESSEY  EQU    OSRAM+010BH    ;JUMP VECTOR FOR O (ODESSEY) COMMAND
        ;
        ;
        ;
        ;
        ;                    EXPANSION AREA FOR EQUATES
        ;
        ;
        ;
BF7C    LKSONTMP EQU OSRAM+017CH        ;TEMPORARY REGISTER FOR SONAR PRINT ROUTINE
BF7E    LSXTEMP  EQU OSRAM+017EH        ;TEMPORARY REGISTER FOR SONAR PRINT ROUTINE
BF80    BUF      EQU OSRAM+0180H        ;LINE BUFFER START
BFC7    BUFEND   EQU OSRAM+01C7H        ;END LINE BUFFER
BFC8    OFFSET   EQU OSRAM+01C8H
BFCA    ADR      EQU OSRAM+01CAH
BFCC    ADDL     EQU OSRAM+01CCH
BFCE    ADDH     EQU OSRAM+01CEH
BFD0    BUFPTR   EQU OSRAM+01D0H
BFD2    RECTYP   EQU OSRAM+01D2H
```

```
BFD3            COUNT    EQU OSRAM+01D3H
BFD4            CKSUM    EQU OSRAM+01D4H
BFD5            TEMP0    EQU OSRAM+01D5H        ;TEMPORARY REGISTERS MAYNOT BE USED
BFD7            TEMP1    EQU OSRAM+01D7H        ;BY ROUTINES THAT ARE ASSOCIATED WITH
BFD9            TEMP2    EQU OSRAM+01D9H        ;INTERRUPTS
BFDB            TEMP3    EQU OSRAM+01DBH
BFDD            TEMP4    EQU OSRAM+01DDH
BFDF            TEMP5    EQU OSRAM+01DFH
BFE1            TEMP6    EQU OSRAM+01E1H
BFE3            TEMP7    EQU OSRAM+01E3H
BFE5            MYFLAG0  EQU OSRAM+01E5H        ;TBD
BFE6            MYFLAG1  EQU OSRAM+01E6H        ;TBD
BFE7            SYSFLAG  EQU OSRAM+01E7H        ;TBD
BFE8            ECHO     EQU OSRAM+01E8H
BFE9            TCOUNT   EQU OSRAM+01E9H
BFEA            CREG     EQU OSRAM+01EAH
BFEB            BREG     EQU OSRAM+01EBH
BFEC            AREG     EQU OSRAM+01ECH
BFED            XREG     EQU OSRAM+01EDH
BFEF            PREG     EQU OSRAM+01EFH
BFF1            SREG     EQU OSRAM+01F1H
BFF3            USWI     EQU OSRAM+01F3H
BFF5            ACIAI    EQU OSRAM+01F5H
BFF7            IRQVEC   EQU OSRAM+01F7H
BFFA            SWIVEC   EQU OSRAM+01FAH
BFFD            NMIVEC   EQU OSRAM+01FDH
A000            MIOV     EQU 0A000H
A002            MBEGA    EQU 0A002H
A004            MENDA    EQU 0A004H
A005            MENDA1   EQU 0A005H
A006            MNIO     EQU 0A006H
A008            MSP      EQU 0A008H
A00A            MCKSM    EQU 0A00AH
A00B            MBYTECT  EQU 0A00BH
A00C            MXHI     EQU 0A00CH
A00D            MXLOW    EQU 0A00DH
A00E            MTEMP    EQU 0A00EH
A00F            MTW      EQU 0A00FH
A010            MTW1     EQU 0A010H
A011            MXCUNT   EQU 0A011H
A012            MXTEMP   EQU 0A012H
A042            MSTACK   EQU 0A042H
0000            MACIA    EQU ACIAT
BFF5            MACIAI   EQU ACIAI
                ;
                ;        THIS AREA FOR SPECIAL SYMBOLIC EQUATES
                ;
0000            XZERO    EQU 0000H              ;LOADS ZERO INTO INDEX REGISTER
                ;
0000            END
```

No error(s).

SYMBOL TABLE FOR FILE NAVDEF.A

A.C	0000	A.L	0010	A.RX	0001	A.S	0000
A.T	0000	A.TX	0001	A.X	0008	A0	0001
A1	0002	A2	0004	A3	0008	A4	0010
A5	0020	A6	0040	A7	0080	ACIACR	0000
ACIAI	BFF5	ACIAL	0010	ACIARX	0001	ACIASTAT	0000
ACIAT	0000	ACIATX	0001	ACIAX	0008	ADDH	BFCE
ADDL	BFCC	ADR	BFCA	AREG	BFEC	B0	0001
B1	0002	B2	0004	B3	0008	B4	0010
B5	0020	B6	0040	B7	0080	BCPTMAB1	BE99
BCPTMAB2	BE9B	BCPTMAB3	BE9D	BCPTMCD1	BE9F	BCPTMCD2	BEA1
BCPTMCD3	BEA3	BCPTMF1	BEAB	BCPTMF2	BEAD	BCPTMF3	BEAF
BCPTML1	BEB1	BCPTML2	BEB3	BCPTML3	BEB5	BCPTMR1	BEB7
BCPTMR2	BEB9	BCPTMR3	BEBB	BCPTMV1	BEA5	BCPTMV2	BEA7
BCPTMV3	BEA9	BOS	BE7F	BREG	BFE8	BUF	BF80
BUFEND	BFC7	BUFPTR	BFD0	C0	0001	C1	0002
C2	0004	C3	0008	C4	0010	C5	0020
C6	0040	C7	0080	CKSUM	BFD4	COLD	BF05
COUNT	BFD3	CRACIAL	BE82	CRACIAT	BE80	CRACIAX	BE81
CREG	BFEA	CRPIAA	BE95	CRPIAB	BE96	CRPIAC	BE97
CRPIAD	BE98	CRPTMAB1	BE83	CRPTMAB2	BE84	CRPTMAB3	BE85
CRPTMCD1	BE86	CRPTMCD2	BE87	CRPTMCD3	BE88	CRPTMF1	BE8C
CRPTMF2	BE8D	CRPTMF3	BE8E	CRPTML1	BE8F	CRPTML2	BE90
CRPTML3	BE91	CRPTMR1	BE92	CRPTMR2	BE93	CRPTMR3	BE94
CRPTMV1	BE89	CRPTMV2	BE8A	CRPTMV3	BE8B	D0	0001
D1	0002	D2	0004	D3	0008	D4	0010
D5	0020	D6	0040	D7	0080	ECHO	BFE8
FWCOUNT	BEF7	INTMASK	BEEE	IO	C000	IOOFFSET	BED8
IRQVEC	BFF7	LKSONTMP	BF7C	LSXTEMP	BF7E	LWCOUNT1	BEFD
LWCOUNT2	BEFF	LWMOD1	BF03	LWMOD2	BF04	MACIA	0000
MACIAI	BFF5	MBEGA	A002	MBYTECT	A00B	MCKSM	A00A
MENDA	A004	MENDA1	A005	MIOV	A000	MMCONT	A011
MNIO	A006	MORETIC	BEC7	MSP	A008	MSTACK	A042
MTEMP	A00E	MTW	A00F	MTW1	A010	MXHI	A00C
MXLOW	A00D	MXTEMP	A012	MYFLAG0	BFE5	MYFLAG1	BFE6
NMIVEC	BFFD	NSSLA	BEE2	NSSLB	BEE3	NSSLC	BEE4
NSSLD	BEE5	ODESSEY	BF0B	OFFSET	BFC8	OSEMOD	BF01
OSEREG	BEF7	OSRAM	BE00	P.AB	0048	P.CD	0050
P.CRA	0001	P.CRB	0003	P.CRC	0001	P.CRD	0003
P.DDA	0000	P.DDB	0002	P.DDC	0000	P.DDD	0002
P.PRA	0000	P.PRB	0002	P.PRC	0000	P.PRD	0002
P.SRA	0001	P.SRB	0003	P.SRC	0001	P.SRD	0003
PIAAB	0048	PIACD	0050	PIACRA	0001	PIACRB	0003
PIACRC	0001	PIACRD	0003	PIADDA	0000	PIADDB	0002
PIADDC	0000	PIADDD	0002	PIAPA	0000	PIAPB	0002
PIAPC	0000	PIAPD	0002	PIASTATA	0001	PIASTATB	0003
PIASTATC	0001	PIASTATD	0003	POWERUP	BEDC	PREG	BFEF
PTMAB	0018	PTMCD	0020	PTMCR1	0000	PTMCR2	0001
PTMCR3	0000	PTMF	0030	PTML	0038	PTMR	0040
PTMSTAT	0001	PTMV	0028	RAMSIZEH	BEDF	RAMSIZEL	BEDD

RECTYP	BFD2	RWCOUNT1	BEF9	RWCOUNT2	BEFB	RWMOD1	BF01
RWMOD2	BF02	SONARA	BEC1	SONARB	BEC2	SONARC	BEC3
SONARD	BEC4	SONARSLA	BEBD	SONARSLB	BEBE	SONARSLC	BEBF
SONARSLD	BEC0	SONCHANG	BEE1	SONDATRA	BEF0	SONDATRB	BEF2
SONDATRC	BEF4	SONDATRD	BEF6	SONDATSA	BEEF	SONDATSB	BEF1
SONDATSC	BEF3	SONDATSD	BEF5	SONNEXA	BEE2	SONNEXB	BEE3
SONNEXC	BEE4	SONNEXD	BEE5	SONTIME	BEC5	SREG	BFF1
SSLA	BEBD	SSLB	BEBE	SSLC	BEBF	SSLD	BEC0
SWIVEC	BFFA	SYSFLAG	BFE7	T.AB	0018	T.C1	0000
T.C2	0001	T.C3	0000	T.CD	0020	T.CNT1	0002
T.CNT2	0004	T.CNT3	0006	T.F	0030	T.L	0038
T.LATCH1	0002	T.LATCH2	0004	T.LATCH3	0006	T.R	0040
T.S	0001	T.V	0028	TCOUNT	BFE9	TEMP0	BFD5
TEMP1	BFD7	TEMP2	BFD9	TEMP3	BFDB	TEMP4	BFDD
TEMP5	BFDF	TEMP6	BFE1	TEMP7	BFE3	TICTEMP0	BEE6
TICTEMP1	BEF8	TICTEMP2	BEEA	TICTEMP3	BEEC	TICTIME	BED9
TIMEZERO	BECA	TUSRAM	BC00	USRSTAK	BE00	USWI	BFF3
WARM	BF08	XREG	BFED	XZERO	0000		

```
;*********************************************
;*                                           *
;*            APPENDIX  E                    *
;*                                           *
;*********************************************
;           FILE: DRIVEDEF.A
;
;           MARS-1 DRIVE COMPUTER DEFINITIONS
;
;           THE DRIVE COMPUTER USES THE VIRTUAL DEVICES
;
;     MENOS UPGRADE FOR THE HEATH HERO COMPUTER.  AS SUCH,
;
;     THE CPU IS A MOTOROLA 6801 AND SYSTEM RAM USAGE IS
;
;     SLIGHTLY DIFFERENT FROM THE STANDARD HERO COMPUTER.
;
;     THE BAUD RATE FOR THE 6801 SERIAL COMMUNICATION INTERFACE
;
;     IS 300 BAUD WHEN POWERING UP IN LILBUG MODE AND 9600
;
;     BAUD WHEN IN MENOS MODE.  THE ORIGINAL BAUD RATE
;
;     FOR MENOS WAS 300.  THE 9600 BAUD RATE WAS OBTAINED BY
;
;     BURNING A NEW ROM (U301) FOR THE MENOS UPGRADE BOARD
;
;     AND CHANGING THE FOLLOWING ROM LOCATIONS
;
;           0FEE9H      0FF06H      0FF91H
;
;     WITH A NEW BAUD RATE DIVISOR BYTE:
;
;           05      FOR 9600 BAUD
;
;           06      FOR 1200 BAUD
;
;           07      FOR  300 BAUD
;
;
0000        ORG     0000H

;RAM ALLOCATIONS FOR MODIFIED HERO (0000-03FF)
;
;
;Version 1.1C.
;Written by A. H. Ballard 10/22/83
;Version 2.
;Written by A. H. Ballard 1/14/84
;
;
```

```
                ;   The original HERO ROM monitor (version 1.0) made use
                ;of the first 63 bytes of the 4K RAM for status data and
                ;jump vectors, and the top 287 bytes of RAM for stacks
                ;and scratchpad areas.  The central 3746 bytes (003F to
                ;0EE0) were left available for user programs.  Version
                ;1.1 of the HERO ROM used another 2 bytes in high RAM.
                ;The modified ROM produced by Virtual Devices reserves
                ;the first 32 bytes in ROM for use as control and status
                ;registers for a new 6801 microprocessor. The original
                ;63 bytes in RAM were moved up by 32 bytes (20 Hex added
                ;to all addresses).  In addition, the Virtual Devices
                ;modification (Version 10) uses 2 bytes in high RAM as a
                ;buffer for serial communications.
                ;
                ;   Immediately after a cold start or a warm restart,
                ;certain of these RAM locations are initialized to
                ;default values.  See the file MHINI1.A for details
                ;of RAM initialization in the HERO robot, as modified by
                ;Virtual Devices.
                ;
                ;
                ;
                ;Current overall allocation of RAM:
                ;
                ;  Low RAM used by Mod HERO     95 bytes (0000-005E)
                ;  User memory available      3710 bytes (005F-0EDC)
                ;  High RAM used by Mod HERO   291 bytes (0EDD-03FF)
                ;
                ;Reserved bytes in low RAM:
                ;
                ;
                ;6801 control and status registers:
                ;
0000            DDR1    RMB 1   ;Port 1 data direction register
                                ;
                                ;  0 = input
                                ;  1 = output
                ;
0001            DDR2    RMB 1   ;Port 2 data direction register
                                ;
                                ;  0 = input
                                ;  1 = output
                ;
                ;
0002            DR1     RMB 1   ;Port 1 data register
                                ;
                                ;  Bits 7,6 = select memory map
                                ;
                                ;    00 = (not used)
                                ;    01 = SYSROM $6000, SYSRAM $E000
                                ;    10 = SYSRAM $6000, HROM $E000
                                ;    11 = SYSRAM $6000, SYSROM $E000
```

```
                                ;
                                ; Bit 5 = green LED (0/1 = OFF/ON)
                                ; Bit 4 = select memory bank 0/1
                                ; Bit 3 = radio (0/1 = RCV/XMT)
                                ; Bit 2 = timer 3 output
                                ; Bit 1 = timer 2 output
                                ; Bit 0 = timer 2 input
                        ;
0003                    DR2     RMB 1   ;Port 2 data register
                                ;
                                ; Bits 7,6,5 = 6801 mode (R/O)
                                ; Bit 4 = serial comm output
                                ; Bit 3 = serial comm input
                                ; Bit 2 = clock for serial comm
                                ; Bit 1 = timer 1 output
                                ; Bit 0 = timer 1 input
                        ;
                        ;
                        ;
                        ;
0004                            ORG $0004
                        ;
0004                    DDR3    RMB 1   ;Port 3 data direction register (not used)

0004                    DR2CPY  EQU $04         ; COPY OF Port 2 data register
                        ;         ^^^^^
                        ;         !!!!!   CRITICAL ADDRESS!!!!!!!!!!!!
                        ;
                        ;
                        ;
0005                            ORG $0005
                        ;
                        ;
0005                    DDR4    RMB 1   ;Port 4 data direction register
                                ;
                                ; Set 1's for address output
                        ;
                        ;
                        ;
0006                            ORG $0006
                        ;
0006                    DR3     RMB 1   ;Port 3 data register (not used)
                        ;
0006                    DDR1CPY EQU $06         ; COPY OF Port 1 data direction register
                        ;
                        ;
                        ;
                        ;
0007                            ORG $0007
                        ;
0007                    DR4     RMB 1   ;Port 4 data register (not used)
                        ;
```

```
                ;
                ;
0008                ORG $0008
                ;
0008            TCSR    RMB 1   ;Timer 1 control and status register
                ;
                ;  Bit 7 = ICF, input capture flag (R/O)
                ;  Bit 6 = OCF, output compare flag (R/O)
                ;  Bit 5 = TOF, timer overflow flag (R/O)
                ;  Bit 4 = EICI, enable input capture interrupts
                ;  Bit 3 = EOCI, enable output compare interrupts
                ;  Bit 2 = ETOI, enable timer overflow interrupts
                ;  Bit 1 = IEDG, input edge polarity (0=HL, 1=LH)
                ;  Bit 0 = OLVL, output level select (0=L, 1=H)
                ;
0009            CNTR    RMB 2   ;16-bit CPU counter register (R/O)
                ;
                ;
000B            OCR1    RMB 2   ;16-bit output compare register 1
                ;
                ;
000D            ICR1    RMB 2   ;16-bit input capture register 1 (R/O)
                ;
                ;
                ;
000F                ORG $000F
                ;
000F            CR3     RMB 1   ;Port 3 control register (not used)
000F            DR1CPY  EQU $0F         ; COPY OF Port 1 data register
                ;
                ;
0010                ORG $0010
                ;
0010            RMCR    RMB 1   ;SCI rate and mode control register
                ;
                ;  Bits 7-4 = (not used)
                ;
                ;  Bits 3,2 = format and clock control
                ;
                ;    00 = Bi-phase, internal clock, P22 not used
                ;    01 = NRZ, internal clock, P22 not used
                ;    10 = NRZ, internal clock, P22 is clock output
                ;    11 = NRZ, external clock, P22 is clock input
                ;
                ;  Bits 1,0 = baud rate select
                ;
                ;    00 = 76800 bps
                ;    01 =  9600 bps
                ;    10 =  1200 bps
                ;    11 =   300 bps
                ;
```

```
0011            TRCS    RMB 1   ;SCI transmit/receive control/status
                ;
                ; Bit 7 = RDRF, receive data register full flag (R/O)
                ; Bit 6 = ORFE, overrun/framing error flag (R/O)
                ; Bit 5 = TDRE, transmit data register empty flag (R/O)
                ; Bit 4 = RIE, receiver interrupt enalbe
                ; Bit 3 = RE, receiver enable
                ; Bit 2 = TIE, transmitter interrupt enable
                ; Bit 1 = TE, transmitter enable
                ; Bit 0 = WU, enable wake-up on next message
                ;
0012            RDR     RMB 1   ;SCI receive data register
                ;
                ;
0013            TDR     RMB 1   ;SCI transmit data register
                ;
                ;
0014            RAMC    RMB 1   ;RAM control register
                ;
                ; Bit 7 = STBY, set to monitor voltage (0/1=LO/HI)
                ; Bit 6 = RAME, 0/1=enable/disable on-chip RAM ($80FF)
                ; Bits 5-0 = (not used)
                ;
                ;
                ;
                ;
0015                    ORG $0015
                ;
                ;Additional registers for 6801U4 version:
                ;
                ; THE FOLLOWING ARE NOT IMPLEMENTED IN THE BASIC 6801 OR 6301
                ; THESE ARE BEING RESERVED FOR THE POTENTIAL USE OF THE 6801U4
                ;
0015            ACNT    RMB 2   ;Alternate counter address
0017            TCR1    RMB 1   ;Timer control register 1
0018            TCR2    RMB 1   ;Timer control register 2
0019            TSR     RMB 1   ;Timer status register
001A            OCR2    RMB 2   ;Output compare register 2
001C            OCR3    RMB 2   ;Output compare register 3
001E            ICR2    RMB 2   ;Input capture register 2
                ;
                ;
                ;
                ;
0020                    ORG $0020
                ;
```

```
                ;HERO status data:
                ;
0020            mpos    EQU *
0020            EXTPOS  RMB 1   ;Current position of arm extend motor
0021            SHLPOS  RMB 1   ;Current position of shoulder motor
0022            ROTPOS  RMB 1   ;Current position of wrist rotate motor
0023            PVTPOS  RMB 1   ;Current position of wrist pivot motor
0024            GRPPOS  RMB 1   ;Current position of gripper motor
0025            HEDPOS  RMB 1   ;Current position of head motor
0026            STRPOS  RMB 1   ;Current position of steering motor
0027            DRVPOS  RMB 2   ;Spoke count for base motor command
0029            DRVODM  RMB 2   ;Odometer spoke count for base motor
                ;
                ;
002B            ACTSTAT RMB 1   ;Activity status byte
                                ;
                                ;  Bits 7-5 = (not used)
                                ;  Bit 4 = base speed ramping
                                ;  Bit 3 = speech active
                                ;  Bit 2 = arm/head motors active
                                ;  Bit 1 = steering motor active
                                ;  Bit 0 = base motor active

                ;
002C            ABTSTAT RMB 1   ;Abort request status byte
                                ;
                                ;  Bits 7-4 = (not used)
                                ;  Bit 3 = abort speech
                                ;  Bit 2 = abort arm/head motors
                                ;  Bit 1 = abort steering motor
                                ;  Bit 0 = abort base motor
                ;
002D            SLEEPER RMB 2   ;Sleep count, 10 sec steps
002F            HUNGRY  RMB 1   ;Low (logic) battery indicator byte
0030            SNRHIT  RMB 1   ;Cum count for detected sonar echoes
0031            SNRRNG  RMB 1   ;Most recently measured sonar range
                ;
                ;
                ;
                ;
0032                    ORG $0032
                ;
                ;User-supplied jump vectors:
                ;
                ;  Default (R) = RTS;  (SR) = SEC,RTS;  (-) = none
                ;
0032            USRCYCLE RMB 3  ;Customize start of interp cycle    (R)
0035            USRINTRP RMB 3  ;Extend interp command list        (SR)
0038            USRIRQ   RMB 3  ;Customize IRQ handler              (R)
003B            USRCLOCK RMB 3  ;Customize clock IRQ routine        (R)
003E            USRSPD   RMB 3  ;Customize drive speed routine      (R)
0041            USRLLB   RMB 3  ;New IRQ, low logic battery        (SR)
```

```
0044            USRLDB   RMB 3  ;New IRQ, low drive battery        (SR)
0047            USRMDT   RMB 3  ;User program for motion detector   (R)
004A            USRTRG   RMB 3  ;User program for pendant trigger   (R)
004D            USREXP   RMB 3  ;User IRQ program for exper board   (R)
0050            USER1    RMB 3  ;Jump vector for Key 9 in exec mode (-)
0053            USER2    RMB 3  ;Jump vector for Key C in exec mode (-)
0056            USER3    RMB 3  ;Jump vector for Key F in exec mode (-)
                ;
                ;
                ;
                ;
                ;       ORG $0059
                ;
                ;Scratch pad registers:
                ;
0059            T0       RMB 2  ;Used in utility, manual, learn modes
005B            T1       RMB 2  ;Used in utility, manual, learn modes
005D            T2       RMB 2  ;Used in utility, manual, learn modes
                ;
                ;
                ;
                ;
                ;
005F                     ORG $005F
                ;
                ;
                ;Ram area available for user programs:
                ;
005F            USRRAM   RMB 3710
                ;
                ;
                ;
                ;
0EDD                     ORG     $0EDD      ;HIGH HERO RAM
                ;
                ;Reserved bytes in high RAM:
                ;
                ;Used only by Virtual Devices modifications:
                ;
                ;RXSTAT EQU $0EDD       ;FF = good byte, 00 = none/bad
0EDD            RXSTAT   RMB 1          ;00=no/bad byte, FF=good byte
                ;RXBUFF EQU $0EDE       ;Holds good byte received
0EDE            RXBUFF   RMB 1          ;Holds good byte received
                ;
                ;Used only in HERO 1.1 and later versions:
                ;
0EDF            PWRTEMP RMB 2   ;AAAA is put here when re-initializing
                                ;to home CPOS registers but not motors
                ;
                ;
                ;Used in executive/interpreter modes:
                ;
```

```
0EE1            MODE     RMB 1  ;00=native mode, FF=robot mode
                ;
0EE2            PCSAVE   RMB 2  ;User program counter stored here
                ;
                ;
0EE4            STRSTP   RMB 12 ;Buffer area for steer stepper motor
0EF0            ARMSTP   RMB 12 ;Buffer area for arm/head steppers
                ;
                ;  Format for STRSTP and ARMSTP buffers:
                ;
                ;    Byte 0 = STPMASK, mask for output port
                ;
                ;      $0F = low nibble
                ;      $F0 = high nibble
                ;
                ;    Byte 1 = STPSCL, scale factor
                ;
                ;      $03 =  4 physical steps per logical step
                ;      $07 =  8 physical steps per logical step
                ;      $0F = 16 physical steps per logical step
                ;      $1F = 32 physical steps per logical step
                ;
                ;    Bytes 2,3 = STPPORT, stepper output port
                ;
                ;    Bytes 4,5 = STPPOS, address of current position
                ;
                ;    Byte 6 = STPLIM, limit switch mask for port $C260
                ;
                ;      $24 for shoulder motor
                ;      $12 for head motor
                ;      $48 for steering motor
                ;      $00 for other motors
                ;
                ;    Byte 7 = STPTIME, speed divisor (decremented to 0)
                ;
                ;    Byte 8 = STPTIME0, speed divisor (fixed)
                ;
                ;    Byte 9 = STPSEQ, step pattern sequence select
                ;
                ;      $00-03 for forward (start at $00)
                ;      $04-07 for reverse (start at $04)
                ;
                ;    Bytes 10,11 = STPNO, number of physical steps to go
                ;
                ;
                ;
                ;
0EFC            CLCKTIME RMB 1  ;8-bit count for 1024 Hz clock
                ;
0EFD            DRVNO    RMB 2  ;Steps to go (DPOS) for base motor
                ;
0EFF            STRPCPY  RMB 1  ;Last byte sent to STRPORT=C260
```

```
0F00            DRVPCPY  RMB 1  ;Last byte sent to DRVPORT=C2A0
0F01            DRVPNEW  RMB 1  ;New byte to go to DRVPORT=C2A0
0F02            ADRPCPY  RMB 1  ;Last byte sent to ADRPORT=C2C0
0F03            PWRPCPY  RMB 1  ;Last byte sent to PWRPORT=C2E0
0F04            IRQPCPY  RMB 1  ;Last byte sent to IRQPORT=C220
                ;
0F05            SPSKAREA RMB 16 ;Speech stack, max of 8 addresses
0F15            SPSKFWA  RMB 2  ;Location, 1st speech stack entry
0F17            SPSKLWA  RMB 2  ;Location, 8th speech stack entry
0F19            SPSKPTR  RMB 2  ;Speech stack pointer saved here
                ;
0F1B            MTRSPD   RMB 1  ;Base motor speed byte stored here
0F1C            STRCTADR RMB 2  ;STRSTP/ARMSTP selection saved here
0F1E            MCB      RMB 2  ;Buffer for motor control bytes
0F20            ACTMASK  RMB 1  ;Mask bits for ACTSTAT byte
0F21            ACTIVATE RMB 1  ;Buffer for new ACTSTAT bits
0F22            DEST     RMB 2  ;Destination address for block move
0F24            SRC      RMB 2  ;Source address for block move
0F26            MVALLOP  RMB 2  ;Buffer for address of 1st MVALL operand
                ;
                ;
                ;
                ;
                ;Used in learn/manual mode only:
                ;
0F28            REVPOS   RMB 2  ;
0F2A            REVADDR  RMB 2  ;
0F2C            ADDRPTR  RMB 2  ;
0F2E            ADDR     RMB 2  ;
0F30            OLDADDR  RMB 2  ;
0F32            FRSTADDR RMB 2  ;
0F34            LASTADDR RMB 2  ;
0F36            LRNMODE  RMB 1  ;
0F37            OLDSLCT  RMB 1  ;
0F38            OLDDIR   RMB 1  ;
0F39            OLDPOS   RMB 1  ;
0F3A            ISOLD    RMB 1  ;
0F3B            SLCT     RMB 1  ;
0F3C            DIR      RMB 1  ;
0F3D            ISARM    RMB 1  ;
0F3E            DRVON    RMB 1  ;
0F3F            STRGON   RMB 1  ;
0F40            ARMON    RMB 1  ;
0F41            ARMBACK  RMB 1  ;
0F42            ARMSTOP  RMB 1  ;
0F43            DELAYTM  RMB 2  ;
0F45            TRIGIN   RMB 1  ;
0F46            BASEOP   RMB 1  ;
0F47            OPCODE   RMB 1  ;
0F48            POS      RMB 2  ;
0F4A            MTR      RMB 1  ;
0F4B            SPD      RMB 1  ;
```

```
0F4C            OLDDIS   RMB 2  ;
0F4E            DISLMDE  RMB 1  ;
0F4F            OLDLMDE  RMB 1  ;
0F50            XTEMP    RMB 2  ;
                ;
                ;Used by IRQ handler only:
                ;
0F52            STPPTR   RMB 2  ;
0F54            TEMP1    RMB 2  ;
0F56            SPSAVE   RMB 2  ;
                ;
                ;Used in executive and interpreter modes
                ;
0F58            USRSTK   RMB 64 ;User stack area
0F98            MONSTK   RMB 64 ;Monitor stack area
0FD8            PWRSTK   RMB 8  ;Power-on stack area
0FE0            BKTBL    RMB 12 ;Table of 4 breakpoint vectors
0FEC            BKPNTSTK RMB 2  ;Pointer for breakpoint stack
0FEE            TE0      RMB 2  ;Temporary register, exec mode
0FF0            TE1      RMB 2  ;Temporary register, exec mode
0FF2            DIGADD   RMB 2  ;Address of next LED display digit
0FF4            USERS    RMB 2  ;User's stack pointer
0FF6            SYSSWI   RMB 3  ;Software interrupt vector
0FF9            DSHPTR   RMB 2  ;Digit address for moving dash display
0FFB            DSHDIR   RMB 1  ;Direction of moving dash display
0FFC            TIME1    RMB 2  ;Display time for "HERO 1.x"
0FFE            TIME2    RMB 2  ;Display time for moving dash
                ;
                ;Used in executive and interpreter modes:
                ;
                ;
                ;End of 4K RAM
                ;

                ;
                ; CONTROL AND STATUS PORTS - - MEMORY MAPPED PHYSICAL ADDRESSES
                ;
C220            SNRTIMR    EQU $C220    ;SONAR TIMER
C240            SENSE      EQU $C240    ;SENSE INPUT
C260            LIMIT      EQU $C260    ;LIMIT SWITCH INPUT BYTE
C280            TEACHING   EQU $C280    ;TEACHING_PNDT (REMOTE) INPUT BYTE
C200            IRQ_PORT   EQU $C200    ;IRQ INTERRUPT BYTE INPUT
C220            EXP_OUT_   EQU $C220    ;EXP_OUT_ADDR  EXPERIMENTAL BOARD OUTPUT BYTE
C2A0            EXP_IN_A   EQU $C2A0    ;EXP_IN_ADDR  EXPERIMENTAL BOARD INPUT BYTE
                ;

                ;PORT DEFINITIONS FOR HERO ROBOT ($C000-D000)
                ;
                ;Version 1.0, 1/16/84, written by A. H. Ballard
                ;
                ;
                ;(6801 ports are defined in HERODEF1.a)
```

```
                ;Input ports:
                ;
C003            COL1    EQU $C003       ;Input from keypad column 1
C005            COL2    EQU $C005       ;Input from keypad column 2
C006            COL3    EQU $C006       ;Input from keypad column 3
                ;
C220            SNRPORT EQU $C220       ;Sonar range data (8 bits)
                ;
C240            SENSPORT EQU $C240      ;Light/sound intensity (8 bits)
                ;
C260            LIMPORT EQU $C260       ;Limit switches + miscellaneous
                ;
                ;  Bit 7 = Cassette tape input
                ;  Bit 6 = Steering motor full CCW
                ;  Bit 5 = Shoulder motor full DOWN
                ;  Bit 4 = Head motor full CCW
                ;  Bit 3 = Steering motor full CW
                ;  Bit 2 = Shoulder motor full UP
                ;  Bit 1 = Head motor full CW
                ;  Bit 0 = Speech board ready for next phoneme
                ;
C280            REMPORT EQU $C280       ;Remote teach pendant, sleep sw.
                ;
                ;  Bit 7 = Select base (0) or arm (1) motion
                ;
                ;  Bits 6,5,4 = rotary selector
                ;
                ;    If base selected: 000 = stop base drive
                ;                      001 = drive forward, slow
                ;                      010 = drive forward, medium
                ;                      011 = drive forward, fast
                ;                      100 = (not used)
                ;                      101 = drive reverse, slow
                ;                      110 = drive reverse, medium
                ;                      111 = drive reverse, fast
                ;
                ;    If arm selected:  000 = (not Used)
                ;                      001 = select wrist pivot motor
                ;                      010 = select wrist rotate motor
                ;                      011 = select gripper motor
                ;                      100 = (not used )
                ;                      101 = select shoulder motor
                ;                      110 = select arm extend motor
                ;                      111 = select head motor
                ;
                ;  Bit 3 = 0 for left/down/in/open direction, 1 for OFF
                ;
                ;  Bit 2 = 0 for right/up/out/close direction, 1 for OFF
                ;
                ;  Bit 1 = Sleep switch (0 = sleep, 1 = normal)
                ;
                ;  Bit 0 = Pendant trigger (0 = released, 1 = active)
```

```
                ;
C2A0            EXPIPORT EQU $C2A0      ;Experiment board input port (8 bits)
                ;
                ;Input/output ports:
                ;
C200            IRQPORT EQU $C200       ;Interrupt request port
                ;
                ;  Input = read interrupt flags
                ;  Output = reset interrupt flags
                ;
                ;    Bit 7 = experiment board interrupt
                ;    Bit 6 = drive wheel spoke sensor
                ;    Bit 5 = trigger on teach pendant
                ;    Bit 4 = 1024 Hz clock
                ;    Bit 3 = low logic battery sensor
                ;    Bit 2 = low drive battery sensor
                ;    Bit 1 = motion detector
                ;    Bit 0 = sonar echo detector
                ;
C300            CLCKPORT EQU $C300      ;Set or read time/date
                ;
                ;  Bits 7-4 = Mode select
                ;
                ;   0100 = Write
                ;   0101 = Hold
                ;   1010 = Read
                ;   (other codes not used)
                ;
                ;  Bits 3-0 = input/output data bus
                ;
                ;    Range = 0000-1001 (0-9) except:
                ;
                ;      For tens of hours, bit 2 = 0/1 for AM/PM
                ;                         bit 3 = 0/1 for 12/24 hour clock
                ;      For tens of days, bit 2 = 0/1 for normal/leap year
                ;
                ;  Clock digits are selected by bits 3-0 of ADRPORT
                ;
                ;
                ;Output ports:
                ;
C16F            DG6ADD  EQU $C16F       ;Leftmost display digit
C15F            DG5ADD  EQU $C15F
C14F            DG4ADD  EQU $C14F
C13F            DG3ADD  EQU $C13F
C12F            DG2ADD  EQU $C12F
C11F            DG1ADD  EQU $C11F       ;Rightmost display digit
                ;
                ;  See MHSYM681.A for definition of display symbols
                ;
                ;
C220            EXPOPORT EQU $C220      ;Experiment board output port
```

```
                ;
C240            SPCHPORT EQU $C240      ;Speech port
                ;
                ;  Bits 7-6 = pitch select (00-11 for levels 1-4)
                ;  Bits 5-0 = phoneme select (1 of 64)
                ;
                ;  See MHSYM681.A for definition of phoneme symbols
                ;
C260            STRPORT EQU $C260       ;Steer and wrist motor port
                ;
                ;  Bits 7-4 = output step pattern for steer motor
                ;
                ;  Bits 3-0 = output step pattern for:
                ;
                ;              Wrist pivot motor if ARMSEL = 01
                ;              Wrist rotate motor if ARMSEL = 10
                ;
                ;  ARMSEL = bits 7,6 of ADRPORT
                ;
C280            EXTPORT EQU $C280     ;Extend/head/gripper/shoulder port
                ;
                ;  Bits 7-4 = output step pattern for:
                ;
                ;              Arm extend motor if ARMSEL = 01
                ;              Head motor if ARMSEL = 10
                ;
                ;  Bits 3-0 = output step pattern for:
                ;
                ;              Gripper motor if ARMSEL = 01
                ;              Shoulder motor if ARMSEL = 10
                ;
                ;  ARMSEL = bits 7,6 of ADRPORT
                ;
C2A0            DRVPORT EQU $C2A0       ;Base drive port
                ;
                ;  Bit 7 = direction (0 = forward, 1 = reverse)
                ;
                ;  Bits 6-0 = magnitude of speed
                ;
                ;    $00-3F = zero speed (dead zone)
                ;    $40-FF = actual speed range
                ;
C2C0            ADRPORT EQU $C2C0       ;Address port
                ;
                ;  Bits 7-6 = ARMSEL
                ;
                ;    01 = select wrist pivot, arm extend, gripper motors
                ;    10 = select wrist rotate, head, shoulder motors
                ;    (other codes not used)
                ;
                ;  Bit 5 = speech strobe (for phoneme code)
                ;
```

```
                ;  Bit 4 = (not used)
                ;
                ;  Bits 3-0 = select real-time clock digit
                ;
                ;    0000 = seconds (0-9)
                ;    0001 = tens of seconds (0-5)
                ;    0010 = minutes (0-9)
                ;    0011 = tens of minutes (0-5)
                ;    0100 = hours (0-9)
                ;    0101 = tens of hours (0-2)
                ;    0110 = day of week (0-6)
                ;    0111 = days (0-9)
                ;    1000 = tens of days (0-3)
                ;    1001 = months (0-9)
                ;    1010 = tens of months (0-1)
                ;    1011 = years (0-9)
                ;    1100 = tens of years (0-9)
                ;
C2E0            PWRPORT EQU $C2E0       ;Power control + miscellaneous
                ;
                ;  Bit 7 = Select light (1) or sound (0) sensor
                ;  Bit 6 = Main power (0/1 = OFF/ON)
                ;  Bit 5 = Light/sound sense board power
                ;  Bit 4 = Display board power
                ;  Bit 3 = Speech board power
                ;  Bit 2 = Motion detector power
                ;  Bit 1 = Sonar power
                ;  Bit 0 = Cassette tape output
                ;
                ;
                ;DEFINITION OF DISPLAY, PHONEME, AND OTHER SYMBOLS
                ;    USED WITH HERO ROBOT
                ;
                ;Version 1.0, 1/16/84, written by A. H. Ballard
                ;
                ;DISPLAY CODES
                ;
                ;       The HERO display has 6 digits.  Each digit is
                ;an LED display assembly having 7 segments and a dot
                ;(decimal point) arranged in the following pattern.
                ;
                ;      ---                    6
                ;     |   |   SEGMENT       1   5    CODE BIT
                ;      ---    PATTERN         0      ASSIGNMENT
                ;     |   |                 2   4
                ;      --- .                  3  7
                ;
                ;The segments to be lit are identified by individual
                ;bits in an 8-bit code character, as shown.  Adding a
                ;dot after any character is achieved by adding 80 hex
                ;to the original display character code.
                ;
```

```
                ;       A display character will be designated by
                ;preceding it with the ` symbol (accent grave).
                ;
                ;HEX NUMBERS

007E            `       EQU $7E
0030            `1      EQU $30
006D            `2      EQU $6D
0079            `3      EQU $79
0033            `4      EQU $33
005B            `5      EQU $5B
005F            `6      EQU $5F
0070            `7      EQU $70
007F            `8      EQU $7F
007B            `9      EQU $7B
0077            `A      EQU $77
001F            `B      EQU $1F
004E            `C      EQU $4E
003D            `D      EQU $3D
004F            `E      EQU $4F
0047            `F      EQU $47
                ;
                ;LETTERS
                ;
0077            `A      EQU $77         ;Same as hex A
007D            `a      EQU $7D
001F            `b      EQU $1F         ;Same as hex B
004E            `C      EQU $4E         ;Same as hex C
000D            `c      EQU $0D
003D            `d      EQU $3D         ;Same as hex D
004F            `E      EQU $4F         ;Same as hex E
0047            `F      EQU $47         ;Same as hex F
005E            `G      EQU $5E
0037                    EQU $37
0017                    EQU $17
0030            `I      EQU $30
003C            `J      EQU $3C
000E            `L      EQU $0E
0015            `n      EQU $15
007E            `O      EQU $7E         ;Same as hex 0
001D            `o      EQU $1D
0067            `p      EQU $67
0005            `r      EQU $05
005B            `S      EQU $5B
0070            `t      EQU $70         ;Same as hex 7
003E            `U      EQU $3E
001C            `u      EQU $1C
003B            `y      EQU $3B
                ;
```

```
                ;PUNCTUATION
                ;
0001            'hy     EQU $01         ;Hyphen, dash or minus
0008            '_      EQU $08         ;Underscore
0080            '.      EQU $80         ;Dot or period
00A0            '!      EQU $A0         ;Exclamation point
0022            'qt     EQU $22         ;Double quote
0065            '?      EQU $65         ;Question mark
0000            'sp     EQU $00         ;Space or blank
                ;
                ;PHONEME CODES
                ;
                ;       The speech synthesizer in the HERO accepts 8-bit
                ;phoneme codes.  The lower 6 bits select 1 of 64 coded
                ;phonemes, while the upper two bits select 1 of 4 pitch
                ;levels.  The basic phoneme codes range from $00 to $3F
                ;at pitch level 1.  To vary the pitch (inflection) to
                ;get greater naturalness:
                ;
                ;               Add $40 to get pitch level 2
                ;               Add $80 to get pitch level 3
                ;               Add $C0 to get pitch level 4
                ;
                ;The STOP phoneme ($3F) is the only code that should
                ;never be raised in pitch.  Raising it to $BF or $FF
                ;would change its meaning.
                ;
                ;       A phoneme code will be designated by preceding
                ;it with the ~ symbol (tilde).  Phoneme durations in
                ;milliseconds are shown in parentheses in the comments.
                ;
0000            ~EH3    EQU $00         ;( 59) as in jack_e_t
0001            ~EH2    EQU $01         ;( 71) as in e_nlist
0002            ~EH1    EQU $02         ;(121) as in h_ea_vy
0003            ~sp     EQU $03         ;( 47) short pause
0004            ~DT     EQU $04         ;( 47) as in bu_tt_er
0005            ~A2     EQU $05         ;( 71) as in m_a_de
0006            ~A1     EQU $06         ;(103) as in m_a_de
0007            ~ZH     EQU $07         ;( 90) as in a_z_ure
0008            ~AH2    EQU $08         ;( 71) as in h_o_nest
0009            ~I3     EQU $09         ;( 55) as in inhib_i_t
000A            ~I2     EQU $0A         ;( 80) as in i_nhibit
000B            ~I1     EQU $0B         ;(121) as in inh_i_bit
000C            ~M      EQU $0C         ;(103) as in m_at
000D            ~N      EQU $0D         ;( 80) as in su_n
000E            ~B      EQU $0E         ;( 71) as in b_ag
000F            ~V      EQU $0F         ;( 71) as in v_an
0010            ~CH     EQU $10         ;( 71) as in ch_ip (~T first)
0011            ~SH     EQU $11         ;(121) as in sh_op
0012            ~Z      EQU $12         ;( 71) as in z_oo
0013            ~AW1    EQU $13         ;(146) as in l_aw_ful
0014            ~NG     EQU $14         ;(121) as in thi_ng
```

```
0015        ~AH1    EQU $15     ;(146) as in f_a_ther
0016        ~OO1    EQU $16     ;(103) as in l_oo_king
0017        ~OO     EQU $17     ;(185) as in b_oo_k
0018        ~L      EQU $18     ;(103) as in l_and
0019        ~K      EQU $19     ;( 80) as in tric_k
001A        ~J      EQU $1A     ;( 47) as in ju_dg_e (~D first)
001B        ~H      EQU $1B     ;( 71) as in h_ello
001C        ~G      EQU $1C     ;( 71) as in g_et
001D        ~F      EQU $1D     ;(103) as in f_ast
001E        ~D      EQU $1E     ;( 55) as in pai_d
001F        ~S      EQU $1F     ;( 90) as in pa_ss
0020        ~A      EQU $20     ;(185) as in d_ay
0021        ~AY     EQU $21     ;( 65) as in d_ay
0022        ~Y1     EQU $22     ;( 80) as in y_ard
0023        ~UH3    EQU $23     ;( 47) as in miss_io_n
0024        ~AH     EQU $24     ;(250) as in m_o_p
0025        ~P      EQU $25     ;(103) as in p_ast
0026        ~O      EQU $26     ;(185) as in c_o_ld
0027        ~I      EQU $27     ;(185) as in p_i_n
0028        ~U      EQU $28     ;(185) as in m_o_ve
0029        ~Y      EQU $29     ;(103) as in an_y
002A        ~T      EQU $2A     ;( 71) as in t_ap
002B        ~R      EQU $2B     ;( 90) as in r_ed
002C        ~E      EQU $2C     ;(185) as in m_ee_t
002D        ~W      EQU $2D     ;( 80) as in w_in
002E        ~AE     EQU $2E     ;(185) as in d_a_d
002F        ~AE1    EQU $2F     ;(103) as in a_fter
0030        ~AW2    EQU $30     ;( 90) as in s_a_lty
0031        ~UH2    EQU $31     ;( 71) as in a_bout
0032        ~UH1    EQU $32     ;(103) as in u_ncle
0033        ~UH     EQU $33     ;(185) as in c_u_p
0034        ~O2     EQU $34     ;( 80) as in f_o_r
0035        ~O1     EQU $35     ;(121) as in ab_oa_rd
0036        ~IU     EQU $36     ;( 59) as in y_ou
0037        ~U1     EQU $37     ;( 90) as in y_ou
0038        ~THV    EQU $38     ;( 80) as in th_e
0039        ~TH     EQU $39     ;( 71) as in th_in
003A        ~ER     EQU $3A     ;(146) as in b_ir_d
003B        ~EH     EQU $3B     ;(185) as in g_e_t
003C        ~E1     EQU $3C     ;(121) as in b_e
003D        ~AW     EQU $3D     ;(250) as in c_a_ll
003E        ~lp     EQU $3E     ;(185) long pause
003F        ~stop   EQU $3F     ;( 47) no sound
            ;
2143                ORG     02143H
            ;
            ;
```

```
                ;HERO COMMAND INTERFACE ROUTINES - C Language Interface
                ;
                ;Version 6
                ;Written by A. H. Ballard, 11/21/83
                ;Updated 7-6-84
                ;
                ;   These routines allow external programs to interface
                ;with the motors, sensors, speech, and other subsystems
                ;in the Hero 1.x robot. The interface is implemented
                ;as a series of subroutine calls. The parameters, or
                ;operands, for each subroutine are first pushed onto the
                ;stack. All operands have 16 bits, with right justifi-
                ;cation. The last operand is stacked first, and the
                ;first operand is stacked last. A subroutine call is
                ;then made to one of the 85 jump vectors provided at the
                ;beginning of this program.
                ;
                ;   In this version, 35 of the 38 interpreted HERO
                ;commands are included in the jump table, althougth the
                ;SLEEP is not actually implemented in this version. The
                ;CRL (change to robot language) and CML (change to
                ;machine language) are not included because they are
                ;not appropiate for external use. The JISP (jump if
                ;speaking) command is actually a subroutine call to a
                ;lower level in the phoneme tree, and is not included
                ;either. Room for expansion to a total of 85 commands
                ;is provided in the jump table.
                ;
                ;   Maximum use is made of subroutines which already
                ;exist in the Hero ROM. Where no operands need to be
                ;passed, it is usually possible to jump directly to an
                ;existing ROM subroutine. Where one or more operands
                ;have to be passed, they are reformatted in this pro-
                ;gram to satisfy the entry conditions required by
                ;existing ROM subroutines.
                ;
                ;Entry points in existing ROM:
                ;
E390            ABM     EQU $E390       ;First of 16 direct entry points
E399            ASM     EQU $E399       ;  (see jump table for comments)
E39D            AAM     EQU $E39D
E3B2            ASP     EQU $E3B2
E417            ZERO    EQU $E417
F423            RTE     EQU $F423
E0A9            ENEYE   EQU $E0A9
E0AD            ENEAR   EQU $E0AD
E0B8            ENSON   EQU $E0B8
E0BC            ENMDT   EQU $E0BC
E0C0            ENDIS   EQU $E0C0
E0CA            DISEYE  EQU $E0CA
E0D5            DISEAR  EQU $E0D5
E0E0            DISSON  EQU $E0E0
```

```
E0E4        DISMDT  EQU $E0E4
E0E8        DISDIS  EQU $E0E8       ;Last of 16 direct entry points
            ;
E35F        SPKEXTRN EQU $E35F      ;External entry for speaking
E499        PSE.EXT EQU $E499       ;External entry for PAUSE
E169        MVR.EXT EQU $E169       ;Ext. entry for move relative
E114        MVI.EXT EQU $E114       ;Ext. entry for move immediate
E151        MVX.EXT EQU $E151       ;Ext. entry for move indexed
E12A        MVE.EXT EQU $E12A       ;Ext. entry for move extended
E1FC        MVALLX  EQU $E1FC       ;External entry for move all
F65B        CLRDIS  EQU $F65B       ;Clear HERO Display
F7E5        OUTSTR  EQU $F7E5       ;Output string to HERO Display
            ;
            ;
            ;
            ;
            ;
            ;Exit points in existing ROM:
            ;
            ;These locations are jumps or jsr's to USER routines located at the
            ; addresses stated:
            ;
            ;               MOD-HERO INTEPPRETER MODE
            ;THE FOLLOWING EXPECT A JUMP OR RTS INSTRUCTION AT THE TO ADDR
            ;
E001        UEXCYCLE  EQU   $E001   ;JSR TO USRCYCLE---START OF INTERPRETER CYCLE
E024        UEXINTRP  EQU   $E024   ;JSR TO USRINTRP---EXTENSION OF INTERPRETER CODES
            ;
            ;               IRQ INTERRUPT HANDLERS
            ;THE FOLLOWING EXPECT A JUMP OR RTS INSTRUCTION AT THE TO ADDR
            ;
EFCC        UEXIRQ    EQU   $EFCC   ;JSR TO USRIRQ---CUSTOMIZED IRQ HANDLER
F01E        UEXCLOCK  EQU   $F01E   ;JSR TO USRCLOCK---CUSTOMIZED CLOCK INT HANDLER
F02E        UEXSPD    EQU   $F02E   ;JSR TO USRSPD---CUSTOMIZED DRIVE SPEED HANDLER
F256        UEXLLB    EQU   $F256   ;JSR TO USRLLB---LOW LOGIC BATTERY VOLTAGE
F2D9        UEXLDB    EQU   $F2D9   ;JSR TO USRLDB---LOW DRIVE BATTERY VOLTAGEE
F004        UEXMDT    EQU   $F004   ;JSR TO USRMDT---MOTION DETECTOR HANDLER
F00B        UEXTRG    EQU   $F00B   ;JSR TO USRTRG---TEACHING PENDENT TRIGGER
F012        UEXEXP    EQU   $F012   ;JSR TO USREXP---EXPERIMENTAL PORT IRQ INT
            ;
            ;               MOD-HERO EXECUTIVE MODE
            ;
F53B        UEXUSER1  EQU   $F53B   ;JSR TO USER1---USER1 KEY DEPRESSED
            ;                       ; LOADS LOCATION USER2 INTO A,B REG BEFORE JUMP
F541        UEXUSER2  EQU   $F541   ;JSR TO USER2---USER2 KEY DEPRESSED
            ;                       ; LOADS LOCATION USER2 INTO A,B REG BEFORE JUMP
F547        UEXUSER3  EQU   $F547   ;JSR TO USER3---USER3 KEY DEPRESSED
            ;                       ; LOADS LOCATION USER3 INTO A,B REG BEFORE JUMP
            ;
            ;
            ;
            ;
```

```
                        ; USER DECLARED TABLES
0023                    NVEC    EQU 35          ;Current number of jump vectors
                        ;
                        ;
                        ;
2143                    SPKTAB  RMB 1   ;Table of phrase addresses
                        ;
2144                    POSITAB RMB 1   ;Table of motor positions
                        ;
                        ;
                        ;
                        ;RAM locations for parameters:
                        ;
0020                    CPOSTAB EQU $0020       ;CURRENT MOTOR POSITION TABLE
002B                    ACTSTAT EQU $002B       ;Activity status byte
0F20                    ACTMASK EQU $0F20       ;Mask to select ACTSTAT bits
                        ;
                        ;
C220                    EXP_OUT_   EQU  $C220   ;EXP_OUT_ADDR  EXPERIMENTAL BOARD OUTPUT BYTE
C2A0                    EXP_IN_A   EQU  $C2A0   ;EXP_IN_ADDR  EXPERIMENTAL BOARD INPUT BYTE
                        ;
0023                    NVEC    EQU 35          ;Current number of jump vectors
                        ;
                        ;
                        ;
                        ;
2145  39                RTRN    RTS             ;Default for unimplemented
                                                ;routines
                        ;
                        ;
                        ;
                        ;
                        ;
                        ;activity()
                        activity
                        ;{
                        ;       char *stat;
                        ; /* check if motors are currently running, return true if they are,
                        ;       false otherwise.  */
                        ;
                        ;       stat = ACTSTAT;
                        ;       return (*stat & 0x0F);
2146  C6 0F                      LDAB    #$0F    ;LOAD MASK FOR ACTSTAT
2148  20 0E                      BRA BUSY
                        ;}
                        ;
214A  C6 01             BBSY    LDAB #01        ;Activity bit for base
214C  20 0A                     BRA BUSY
214E  C6 02             SBSY    LDAB #02        ;Activity bit for steering
2150  20 06                     BRA BUSY
2152  C6 04             ABSY    LDAB #04        ;Activity bit for arm/head
2154  20 02                     BRA BUSY
```

```
2156  C6 08        VBSY   LDAB #08        ;Activity bit for voice (speech)
                    ;
2158  D4 2B        BUSY   ANDD ACTSTAT    ;Test busy status
215A  4F                  CLRA
215B  39                  RTS             ;Return with D = 0 if not busy
                    ;
                    ;
                    ;
                    ;
                    ;
215C  86 08        SPWX   LDAA #08        ;Setup wait for speech
215E  20 01               BRA SPCX.1
                    ;
2160  4F           SPCX   CLRA            ;Setup to continue
2161  B7 0F 20     SPCX.1 STAA ACTMASK
2164  30                  TSX
2165  E6 03               LDAB 3,X        ;B = phrase number
2167  58                  ASLB            ;B = address offset
2168  FE 21 43            LDX SPKTAB      ;Point to phrase table
216B  3A                  ABX             ;Point to phrase address
216C  E6 00               LDAB 0,X
216E  A6 01               LDAA 1,X        ;BA = phrase address
2170  7E E3 5F            JMP SPKEXTRN
                    ;
2173  86 08        SPWE   LDAA #08        ;Setup wait for speech
2175  20 01               BRA SPCE.1
                    ;
2177  4F           SPCE   CLRA            ;Setup to continue
2178  B7 0F 20     SPCE.1 STAA ACTMASK
217B  30                  TSX
217C  E6 02               LDAB 2,X
217E  A6 03               LDAA 3,X        ;BA = phrase address
2180  7E E3 5F            JMP SPKEXTRN
                    ;
2183  30           PAUSE  TSX
2184  EE 02               LDX 2,X         ;IX = count (1/16 sec steps)
2186  7E E4 99            JMP PSE.EXT
                    ;
2189  7E 21 45     SLEEP  JMP RTRN        ;Not currently implemented
                    ;
218C  86 07        MVWR   LDAA #07        ;Setup motor wait bits
218E  20 01               BRA MVCR.1
                    ;
2190  4F           MVCR   CLRA            ;Setup to continue
2191  B7 0F 20     MVCR.1 STAA ACTMASK
2194  30                  TSX
2195  EE 02               LDX 2,X         ;IX = 2-byte operand
2197  7E E1 69            JMP MVR.EXT     ;Use existing ROM routine
                    ;
219A  86 07        MVWI   LDAA #07        ;Setup motor wait bits
219C  20 01               BRA MVCI.1
                    ;
```


210

```
219E  4F          MVC1    CLRA          ;Setup to continue
219F  B7 0F 20    MVC1.1  STAA ACTMASK
21A2  30                  TSX
21A3  EE 02               LDX 2,X       ;IX = 2-byte operand
21A5  7E E1 14            JMP MV1.EXT   ;Use existing ROM routine
                  ;
21A8  86 07       MVWX    LDAA #07      ;Setup motor wait bits
21AA  20 01               BRA MVCX.1
                  ;
21AC  4F          MVCX    CLRA          ;Setup to continue
21AD  B7 0F 20    MVCX.1  STAA ACTMASK
21B0  30                  TSX
21B1  E6 03               LDAB 3,X      ;B = position index
21B3  58                  ASLB          ;B = address offset
21B4  FE 21 44            LDX POSITAB   ;Point to table of positions
21B7  3A                  ABX           ;Point to selected position
21B8  7E E1 51            JMP MVX.EXT   ;Use existing ROM routine
                  ;
21BB  86 07       MVWE    LDAA #07      ;Setup motor wait bits
21BD  20 01               BRA MVCE.1
                  ;
21BF  4F          MVCE    CLRA          ;Setup to continue
21C0  B7 0F 20    MVCE.1  STAA ACTMASK
21C3  30                  TSX
21C4  EE 02               LDX 2,X       ;IX = address of operand
21C6  7E E1 2A            JMP MVE.EXT   ;Use existing ROM routine
                  ;
21C9  30          MVALL   TSX
21CA  08                  INX
21CB  08                  INX           ;IX will point to 1st operand
21CC  A6 01               LDAA 1,X
21CE  A7 00               STAA 0,X      ;1st operand = EXTPOS
21D0  A6 03               LDAA 3,X
21D2  A7 01               STAA 1,X      ;2nd operand = SHLPOS
21D4  A6 05               LDAA 5,X
21D6  A7 02               STAA 2,X      ;3rd operand = ROTPOS
21D8  A6 07               LDAA 7,X
21DA  A7 03               STAA 3,X      ;4th operand = PVTPOS
21DC  A6 09               LDAA 9,X
21DE  A7 04               STAA 4,X      ;5th operand = GRPPOS
21E0  A6 0B               LDAA 11,X
21E2  A7 05               STAA 5,X      ;6th operand = HEIPOS
21E4  A6 0D               LDAA 13,X
21E6  A7 06               STAA 6,X      ;7th operand = STRPOS
21E8  7E E1 FC            JMP MVALLX
                  ;
21EB  30          MMV     TSX
21EC  C6 40               LDAB   #01000000B     ;SET FOR SLOW SPEED
21EE  A6 03               LDAA   3,X            ;A NOW IS MOTOR INDEX
21F0  04                  LSRD                  ;ALIGN BITS IN B REG
21F1  04                  LSRD
21F2  04                  LSRD
```

```
21F3  A6 05              LDAA   5,X          ;A IS POSITION
21F5  36                 PSHA          ; NOTE FOLLOWING REVERSAL FROM STANDARD PUSH
21F6  37                 PSHB          ; <<<<<<<---------------- ORDER
21F7  38                 PULX                ; IX = 2-BYTE OPERAND
21F8  7E E1 14           JMP    MVI.EXT      ; GO TO HERO ROM AND RETURN
                    ;
                    ;
0F24                SRC.H  EQU    $0F24
0F22                DEST.H EQU    $0F22
E291                MOVE.H EQU    $E291
                    ;
21FB  CE 22 0C      MAXPOS LDX    #MAXTBL      ;POINT TO TABLE OF MAX POSITIONS
21FE  FF 0F 24           STX    SRC.H        ;$0F24 IN HERO RAM
2201  CE 00 20           LDX    #CPOSTAB     ;$0020 IN HERO RAM
2204  FF 0F 22           STX    DEST.H       ; $0F22 IN HERO RAM
2207  C6 07              LDAB   #7           ; COUNT IS 7 BYTES
2209  7E E2 91           JMP    MOVE.H       ;$E291  IN HERO ROM
220C  98 86 93 A5   MAXTBL FCB    $98,$86,$93,$A5,$75,$C9,$93
2210  75 C9 93
                    ;
                    ;
                    ;
                    ;EXPOUT(c)
                    ;      char c;
                    EXPOUT
                    ;(     EXPOUTPUT = c; /* output the data to the experimenter port */
2213  30                 TSX
2214  E6 03              ldab   3,X
2216  F7 C2 20           stab   $C220
                    ;)
2219  39                 RTS
                    ;EXPINP()
                    EXPINP
                    ;(     return EXPINPUT ; /* input the data from the experimenter port */
221A  4F                 clra
221B  F6 C2 A0           ldab   $C2A0
221E  39                 RTS
                    ;
                    ;
                    ;  The following equates state how the functions in Menos utilize the
                    ;routines above.  Please do not assume that Menos uses all of the
                    ;above routines.  Menos must never wait too long for a routine (such
                    ;as zero) to execute, and thus has equivalent routines, with the names
                    ;given as below, which perform the function of the above routines.
                    ;
                    ;
E390                abmvec EQU   ABM      ;Abort base motor
E399                asmvec EQU   ASM      ;Abort steering motor
E39D                aamvec EQU   AAM      ;Abort arm/head motors
E3B2                aspvec EQU   ASP      ;Abort speech
214A                bbsyvec EQU  BBSY     ;Test for base busy
214E                sbsyvec EQU  SBSY     ;Test for steering busy
```

```
2152        absyvec EQU  ABSY     ;Test for arm/head busy
2156        vbsyvec EQU  VBSY     ;Test for voice (speech) busy
E417        zrovec  EQU  ZERO     ;Initialize all stepper motors
F423        rtevec  EQU  RTE      ;Return to executive mode
E0A9        eldvec  EQU  ENEYE    ;Enable light detector (eye)
E0AD        esdvec  EQU  ENEAR    ;Enable sound detector (ear)
E0B8        eurvec  EQU  ENSON    ;Enable ultrasonic ranger
E0BC        emdvec  EQU  ENMOT    ;Enable motion detector
E0C0        edsvec  EQU  ENDIS    ;Enable display
E0CA        dldvec  EQU  DISEYE   ;Disable light detector (eye)
E0D5        dsdvec  EQU  DISEAR   ;Disable sound detector (ear)
E0E0        durvec  EQU  DISSON   ;Disable ultrasonic ranger
E0E4        dmdvec  EQU  DISMOT   ;Disable motion detector
E0E8        ddsvec  EQU  DISDIS   ;Disable display
215C        spwxvec EQU  SPWX     ;Speak and wait (indexed)
2160        spcxvec EQU  SPCX     ;Speak and continue (indexed)
2173        spwevec EQU  SPWE     ;Speak and wait (extended)
2177        spcevec EQU  SPCE     ;Speak and continue (extended)
2183        psevec  EQU  PAUSE    ;Pause for specified time
2189        slpvec  EQU  SLEEP    ;Sleep for specified time
219A        mwivec  EQU  MVWI     ;Move and wait (immediate)
219E        mcivec  EQU  MVCI     ;Move and continue (immediate)
218C        mwrvec  EQU  MVWR     ;Move relative, wait (immediate)
2190        mcrvec  EQU  MVCR     ;Move relative, continue (immed)
21A8        mwxvec  EQU  MVWX     ;Move and wait (indexed)
21AC        mcxvec  EQU  MVCX     ;Move and continue (indexed)
21BB        mwevec  EQU  MVWE     ;Move and wait (extended)
21BF        mcevec  EQU  MVCE     ;Move and continue (extended)
21C9        mvlvec  EQU  MVALL    ;Move all 7 stepper motors
21FB        smtrmax EQU  MAXPOS   ;Set all motor position registers to max
21EB        mtrmvec EQU  MMV              ;Special MVCI at medium speed
221A        expinpve EQU EXPINP   ;Get experimental board input
2213        expoutve EQU EXPOUT   ;Output byte to experimental port
            ;
            ;
            ;
F37E        PWRON   EQU    $F37E  ;WARM START ADDRESS---NO RETURN EXPECTED
7EFD        RTMH    EQU    $7EFD  ;RETURN TO MOD-HERO IN VERSION 1.1B OF VAMP
221F                END
```

No error(s).

SYMBOL TABLE FOR FILE: DRIVEDEF.A

AAM	E39D	ABM	E390	ABSY	2152	ABTSTAT	002C
ACNT	0015	ACTIVATE	0F21	ACTMASK	0F20	ACTSTAT	002B
ADDR	0F2E	ADDRPTR	0F2C	ADRPCPY	0F02	ADRPORT	C2C0
ARMBACK	0F41	ARMON	0F40	ARMSTOP	0F42	ARMSTP	0EF0
ASM	E399	ASP	E3B2	BASEOP	0F46	BBSY	214A
BKPNTSTK	0FEC	BKTBL	0FE0	BUSY	2158	CLCKPORT	C300
CLCKTIME	0EFC	CLRDIS	F65B	CNTR	0009	COL1	C003
COL2	C005	COL3	C006	CPOSTAB	0020	CR3	000F
DDR1	0000	DDR1CPY	0006	DDR2	0001	DDR3	0004
DDR4	0005	DELAYTM	0F43	DEST	0F22	DEST.H	0F22
DG1ADD	C11F	DG2ADD	C12F	DG3ADD	C13F	DG4ADD	C14F
DG5ADD	C15F	DG6ADD	C16F	DIGADD	0FF2	DIR	0F3C
DISDIS	E0EB	DISEAR	E0D5	DISEYE	E0CA	DISLMDE	0F4E
DISMDT	E0E4	DISSON	E0E0	DR1	0002	DR1CPY	000F
DR2	0003	DR2CPY	0004	DR3	0006	DR4	0007
DRVNO	0EFD	DRVOOM	0029	DRVON	0F3E	DRVPCPY	0F00
DRVPNEW	0F01	DRVPORT	C2A0	DRVPOS	0027	DSHDIR	0FFB
DSHPTR	0FF9	ENDIS	E0C0	ENEAR	E0AD	ENEYE	E0A9
ENMDT	E0BC	ENSON	E0B8	EXPINP	221A	EXPIPORT	C2A0
EXPOPORT	C220	EXPOUT	2213	EXP_IN_A	C2A0	EXP_OUT_	C220
EXTPORT	C280	EXTPOS	0020	FRSTADDR	0F32	GRPPOS	0024
HEDPOS	0025	HUNGRY	002F	ICR1	000D	ICR2	001E
IRQPCPY	0F04	IRQPORT	C200	IRQ_PORT	C200	ISARM	0F3D
ISOLD	0F3A	LASTADDR	0F34	LIMIT	C260	LIMPORT	C260
LRNMODE	0F36	MAXPOS	21FB	MAXTBL	220C	MCB	0F1E
MMV	21EB	MODE	0EE1	MONSTK	0F98	MOVE.H	E291
MTR	0F4A	MTRSPD	0F1B	MVALL	21C9	MVALLOP	0F26
MVALLX	E1FC	MVCE	21BF	MVCE.1	21C0	MVCI	219E
MVCI.1	219F	MVCR	2190	MVCR.1	2191	MVCX	21AC
MVCX.1	21AD	MVE.EXT	E12A	MVI.EXT	E114	MVR.EXT	E169
MVWE	21BB	MVWI	219A	MVWR	218C	MVWX	21A8
MVX.EXT	E151	NVEC	0023	OCR1	000B	OCR2	001A
OCR3	001C	OLDADDR	0F30	OLDDIR	0F38	OLDDIS	0F4C
OLDLMDE	0F4F	OLDPOS	0F39	OLDSPCT	0F37	OPCODE	0F47
OUTSTR	F7E5	PAUSE	2183	PCSAVE	0EE2	POS	0F48
POSITAB	2144	PSE.EXT	E499	PVTPOS	0023	PWRON	F37E
PWRPCPY	0F03	PWRPORT	C2E0	PWRSTK	0FD8	PWRTEMP	0EDF
RAMC	0014	RDR	0012	REMPORT	C280	REVADDR	0F2A
REVPOS	0F28	RMCR	0010	ROTPOS	0022	RTE	F423
RTMH	7EFD	RTRN	2145	RXBUFF	0EDE	RXSTAT	0EDD
SBSY	214E	SENSE	C240	SENSPORT	C240	SHLPOS	0021
SLCT	0F3B	SLEEP	2189	SLEEPER	002D	SNRHIT	0030
SNRPORT	C220	SNRRNG	0031	SNRTIMR	C220	SPCE	2177
SPCE.1	2178	SPCHPORT	C240	SPCX	2160	SPCX.1	2161
SPD	0F4B	SPKEXTRN	E35F	SPKTAB	2143	SPSAVE	0F56
SPSKAREA	0F05	SPSKFWA	0F15	SPSKLWA	0F17	SPSKPTR	0F19
SPWE	2173	SPWX	215C	SRC	0F24	SRC.H	0F24
STPPTR	0F52	STRCTADR	0F1C	STRGON	0F3F	STRPCPY	0EF4
STRPORT	C260	STRPOS	0026	STRSTP	0EE4	SYSSWI	0FF6

T0	0059	T1	005B	T2	005D	TCR1	0017
TCR2	0018	TCSR	0008	TDR	0013	TE0	0FEE
TE1	0FF0	TEACHING	C200	TEMP1	0F54	TIME1	0FFC
TIME2	0FFE	TRCS	0011	TRIGIN	0F45	TSR	0019
UEXCLOCK	F01E	UEXCYCLE	E001	UEXEXP	F012	UEXINTRP	E024
UEXIRQ	EFCC	UEXLDB	F2D9	UEXLLB	F256	UEXMDT	F004
UEXSPD	F02E	UEXTRG	F00B	UEXUSER1	F53B	UEXUSER2	F541
UEXUSER3	F547	USER1	0050	USER2	0053	USER3	0056
USERS	0FF4	USRCLOCK	003B	USRCYCLE	0032	USREXP	004D
USRINTRP	0035	USRIRQ	0038	USRLDB	0044	USRLLB	0041
USRMDT	0047	USRRAM	005F	USRSPD	003E	USRSTK	0F58
USRTRG	004A	VBSY	2156	XTEMP	0F50	ZERO	E417
'!	00A0	'.	0080	'0	007E	'1	0030
'2	006D	'3	0079	'4	0033	'5	005B
'6	005F	'7	0070	'8	007F	'9	007B
'?	0065	'A	0077	'B	001F	'C	004E
'D	003D	'E	004F	'F	0047	'G	005E
'H	0037	'I	0030	'J	003C	'L	000E
'O	007E	'S	005B	'U	003E	'_	0008
'a	007D	'b	001F	'c	000D	'd	003D
'h	0017	'hy	0001	'n	0015	'o	001D
'p	0067	'qt	0022	'r	0005	'sp	0000
't	0070	'u	001C	'y	003B	aamvec	E39D
abmvec	E390	absyvec	2152	activity	2146	asmvec	E399
aspvec	E3B2	bbsyvec	214A	ddsvec	E0E8	dldvec	E0CA
dmdvec	E0E4	dsdvec	E0D5	durvec	E0E0	edsvec	E0C0
eldvec	E0A9	emdvec	E0BC	esdvec	E0AD	eurvec	E0B8
expinpve	221A	expoutve	2213	mcevec	21BF	mcivec	219E
mcrvec	2190	mcxvec	21AC	mpos	0020	mtrmvec	21EB
mvlvec	21C9	mwevec	21BB	mwivec	219A	mwrvec	218C
mwxvec	21A8	psevec	2183	rtevec	F423	sbsyvec	214E
slpvec	2189	smtrmax	21FB	spcevec	2177	spcxvec	2160
spwevec	2173	spwxvec	215C	vbsyvec	2156	zrcvec	E417
~A	0020	~A1	0006	~A2	0005	~AE	002E
~AE1	002F	~AH	0024	~AH1	0015	~AH2	0008
~AW	003D	~AW1	0013	~AW2	0030	~AY	0021
~B	000E	~CH	0010	~D	001E	~DT	0004
~E	002C	~E1	003C	~EH	003B	~EH1	0002
~EH2	0001	~EH3	0000	~ER	003A	~F	001D
~G	001C	~H	001B	~I	0027	~I1	000B
~I2	000A	~I3	0009	~IU	0036	~J	001A
~K	0019	~L	0018	~M	000C	~N	000D
~NG	0014	~O	0025	~O1	0035	~O2	0034
~OO	0017	~OO1	0016	~P	0025	~R	002B
~S	001F	~SH	0011	~T	002A	~TH	0039
~THV	0038	~U	0028	~U1	0037	~UH	0033
~UH1	0032	~UH2	0031	~UH3	0023	~V	000F
~W	002D	~Y	0029	~Y1	0022	~Z	0012
~ZH	0007	~lp	003E	~sp	0003	~stop	003F

APPENDIX F

Navigation Computer Parts List

U#	LOC.	TYPE	#PINS	PARTS USED	+5VDC	GROUND	+6VDC	+12VDC	-12VDC
1		DC-DC	24	ALL	1	10,12,13,15		11,14	
0	AA37	DC-DC	24	ALL	1	11,12,13,14			10,15
1	AA15	6802	40	ALL	2,3,8,35	1,21			
2	AD1	74LS244	20	ALL	20	10			
3	AD14	74LS244	20	ALL	20	10			
4	AD26	74LS245	20	ALL	20	10			
5	AD38	74LS245	20	ALL	20	10			
6	AF1	74LS04	14	1,2,3,4	14	7			
7	AF10	74LS14	14	1,2,3,4,11,15, 13,14	14	7			
8	AF18	74LS138	16	ALL	16	8			
9	AF28	74LS138	16	ALL	16	8			
10	AF38	74LS00	14	1,2,3,4,5,6	14	7			
11	AH1	EDH8808	28	ALL	28	14			
12	AH18	EDH8808	28	ALL	28	14			
13	AH34	EDH8808	28	ALL	28	14			
14	BB1	EDH8808	28	ALL	28	14			
15	BB18	EDH8808	28	ALL	28	14			
16	BB34	EDH8808	28	ALL	28	14			
17	BE1	6850	24	ALL	12	1			
18	BE18	2764	28	ALL	1,26,28	14			
19	BE34	14411	24	ALL	24	12			
20	BH1	6850	24	ALL	12	1			
21	BH20	6821	40	ALL	20	1			
22	BH42	1488	14			7		14	1
23	CB1	74125	14	1,2,3,4,5,6	14	1,7			
24	CB20	6821	40	ALL	20	1			
25	CB42	1489	14		14	7			
26	CE1	6840	28	T1,T2	14	1			
27	CE18	6840	28	T1,T2	14	1			
28	CE34	6840	28	T3	14	1			
29	CJ1	75468	16	ALL	9	8			
30	CJ10	75468	16	ALL	9	8			
31	CJ20	75468	16	ALL	9	8			
32	CJ30	75468	16	ALL	9	8			
33	CJ40	75468	16	ALL	9	8			
34	DC1	RELAY	14	A0			2		
35	DC9	RELAY	14	B0			2		
36	DC17	RELAY	14	C0			2		
37	DC25	RELAY	14	D0			2		

U#	LOC.	TYPE	#PINS	PARTS USED	+5VDC	GROUND	+6VDC	+12VDC	-12VDC
38	DC33	S2	16	ALL					
39	DC42	S1	16	ALL					
40	DE1	RELAY	14	A1			2		
41	DE9	RELAY	14	B1			2		
42	DE17	RELAY	14	C1			2		
43	DE25	RELAY	14	D1			2		
44	DE33	74LS74	14		14	7			
45	DE42	74LS74	14		14	7			
46	DG1	RELAY	14	A2			2		
47	DG9	RELAY	14	B2			2		
48	DG17	RELAY	14	C2			2		
49	DG25	RELAY	14	D2			2		
50	DG33	75468	16	SPARE	9	8			
51	DG42	7404	14	1,2,3,4,5,6,8,9	14	7			
52	DJ1	RELAY	14	A4			2		
53	DJ9	RELAY	14	B4			2		
54	DJ17	RELAY	14	C4			2		
55	DJ25	RELAY	14	D4			2		
56	DJ33	7404	14	1,2,3,4,5,6,8,9	14	7			
57	EC1	RELAY	14	A5			2		
58	EC9	RELAY	14	B5			2		
59	EC17	RELAY	14	C5			2		
60	EC25	RELAY	14	D5			2		
61	EE1	RELAY	14	A6			2		
62	EE9	RELAY	14	B6			2		
63	EE17	RELAY	14	C6			2		
64	EE25	RELAY	14	D6			2		
65	EG1	RELAY	14	SPARE			2		
66	EG9	RELAY	14	SPARE			2		
67	EG17	RELAY	14	SPARE			2		
68	EG25	RELAY	14	SPARE			2		
69	EJ1	RELAY	14	SPARE			2		
70	EJ9	RELAY	14	SPARE			2		
71	EJ17	RELAY	14	SPARE			2		
72	EJ25	RELAY	14	SPARE			2		
73	EB34	2764	28	ALL	1,26,28	14			
74	CB10	74LS138	16		16	8			
75	EE34	6850	24		12	1			
76	FB33	74LS138	16	ALL	16	8			
77	FB43	74LS138	16	ALL	16	8			
78	OSE	6840	28	ALL	19	20			
79	OSE	6840	28	ALL	19	20			
80	OSE	6840	28	ALL	19	20			
81	OSE	CONNECTOR							
82	OSE	CONNECTOR							
83	EJ43	74LS123	16		16	8			
84	OSE	DM9602	16	ALL	16	8			
85	OSE	DM9602	16	ALL	16	8			
86	OSE	DM9602	16	ALL	16	8			

U#	LOC.	TYPE	#PINS	PARTS USED	+5VDC	GROUND	+6VDC	+12VDC	-12VDC
	CD1	420 KHz Clock Board							
	EB1	TIP125 and D1-D9 (silicon signal diodes)							
		Sonar Boards (A,B,C,D)							
		S1 (Reset, momentary)							
	DJ41	RESISTOR PACK (5.1 K)							
	AA13	6 MHz CRYSTAL							
	BF47	1.8432 MHz CRYSTAL							
		RESISTOR PACK (5.1 K) (BUTTOM OF NAV CPU BOARD)							
		24 POLAROID SONAR TRANSDUCERS (ON ROBOT BODY PANNELS)							

APPENDIX G

NAVIGATION COMPUTER SCHEMATICS

Appendix G contains the following schematics:

Fig		Page
G.1	CPU ControlBus	G-2
G.2	CPU Address Bus	G-3
G.3	CPU Data Bus	G-4
G.4	RAM/ROM Address and Data Bus	G-4
G.5	I/O Address and Data Bus	G-5
G.6	RAM/ROM Chip Enables	G-6
G.7	I/O Chip Enables	G-7
G.8	I/O Auxiliary Signals	G-8
G.9	ROM Overlay RAM circuits	G-9
G.10	Serial I/O Ports	G-10
G.11	Buffered Sonar Signals	G-11
G.12	Sonar Timer/Range Board Interface	G-12
G.13	Sonar Transducer Selection Circuitry	G-13
G.14	Sonar Transducer Relay Interface	G-14
G.15	Optical Shaft Encoder Timer/Counter Circuit	G-15
G.16	24 Pin Sonar Transducer Header	G-16
G.17	Dual Sonar Range Board 20 Pin Header	G-16
G.18	Optical Shaft Encoder Board 40 Pin Header	G-17

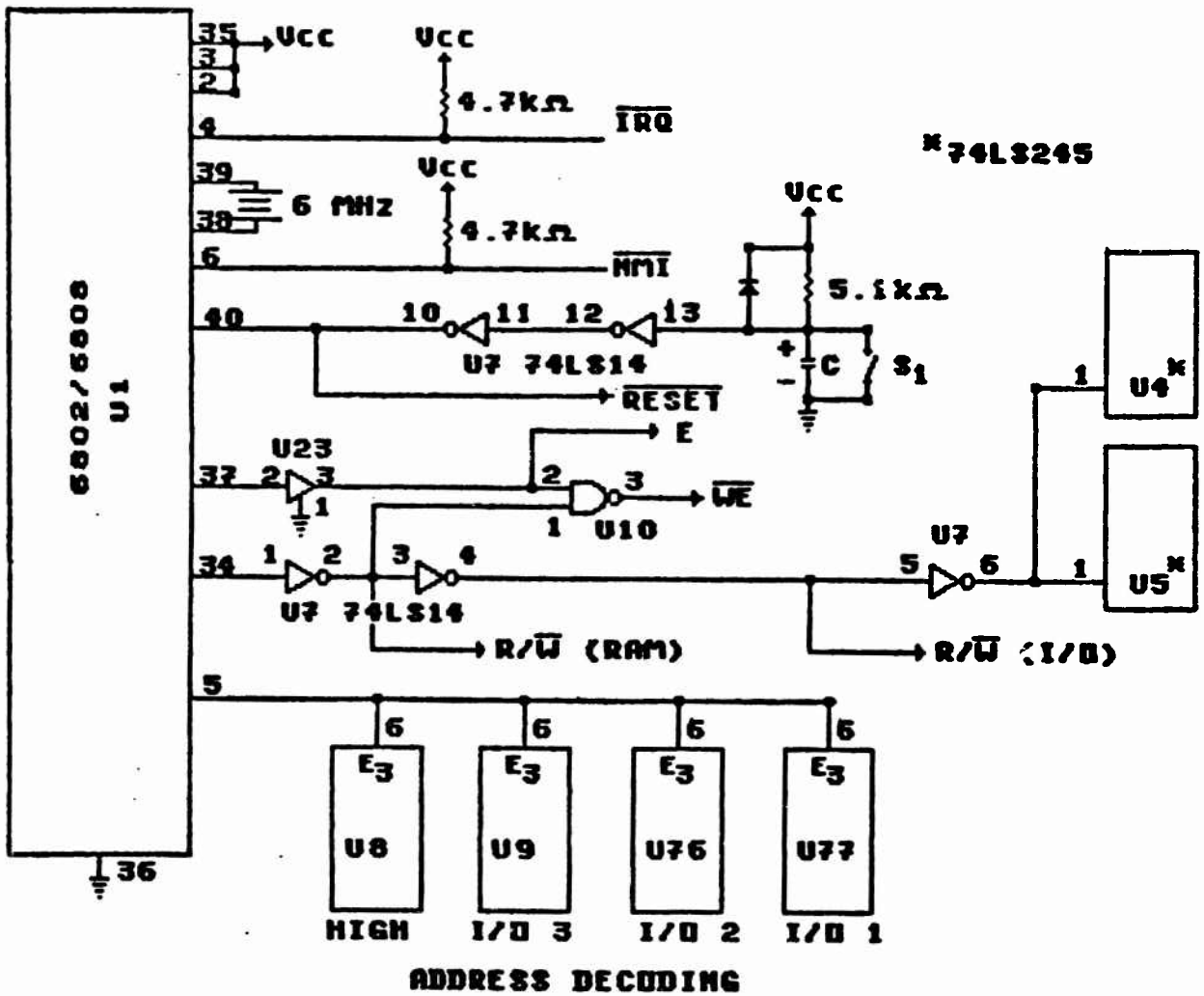

Fig. G.1 CPU Control Bus

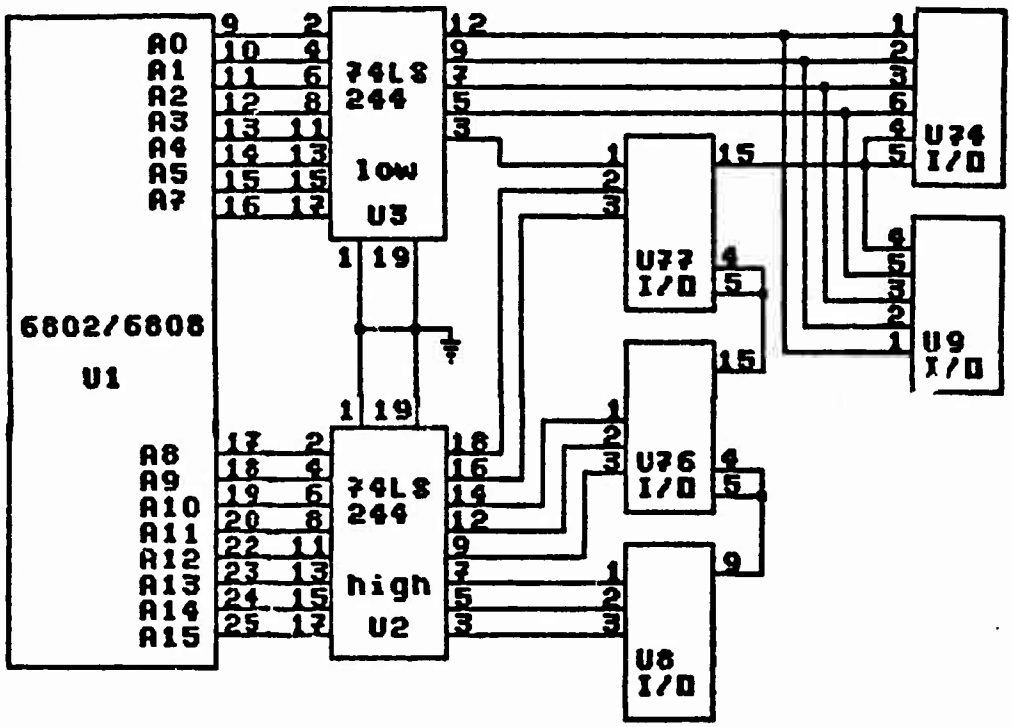

U2	74LS244	HIGH ADDRESS
U3	74LS244	LOW ADDRESS
U8	74LS138	8K of 64K
U9	74LS138	8 of 64
U74	74LS138	8 of 64
U76	74LS138	1K of 8K
U77	74LS138	128 of 1K

Fig. G.2 CPU Address Bus

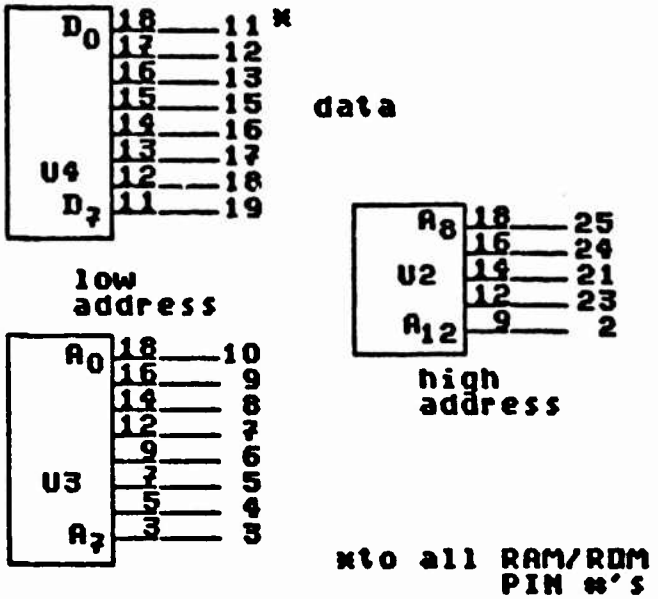

Fig. G.3 CPU Data Bus

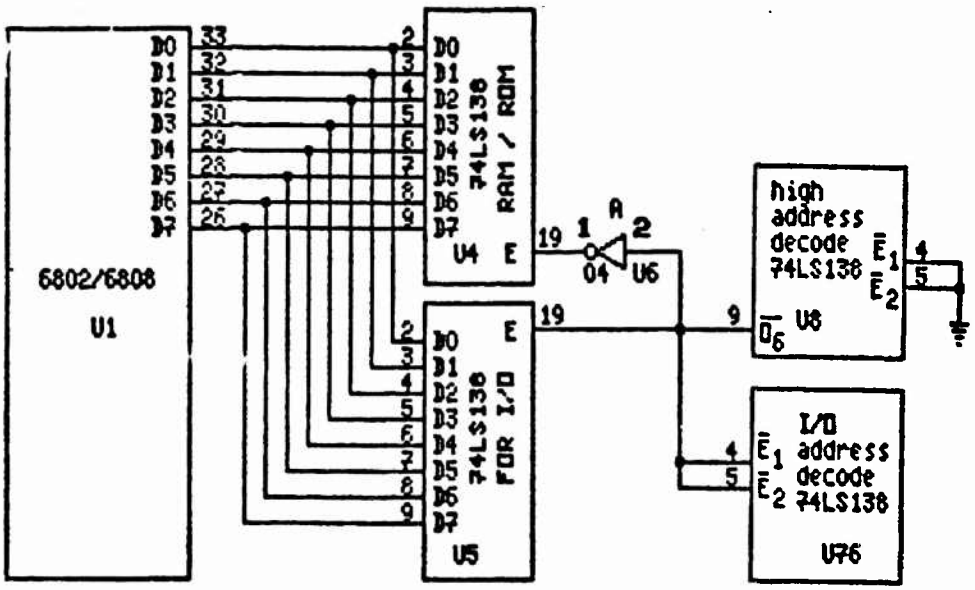

Fig. G.4 RAM/ROM Address and Data Bus

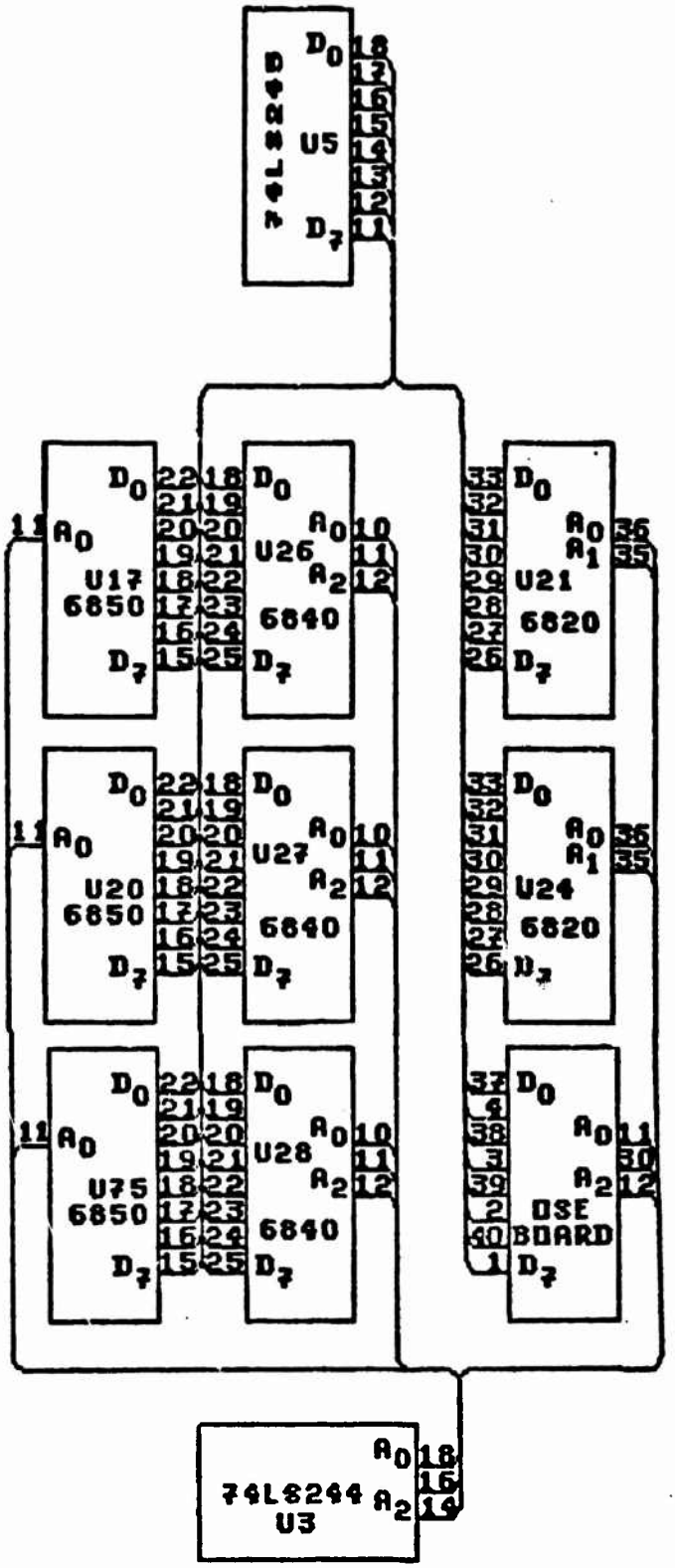

Fig. G.5 I/O Address and Data Bus

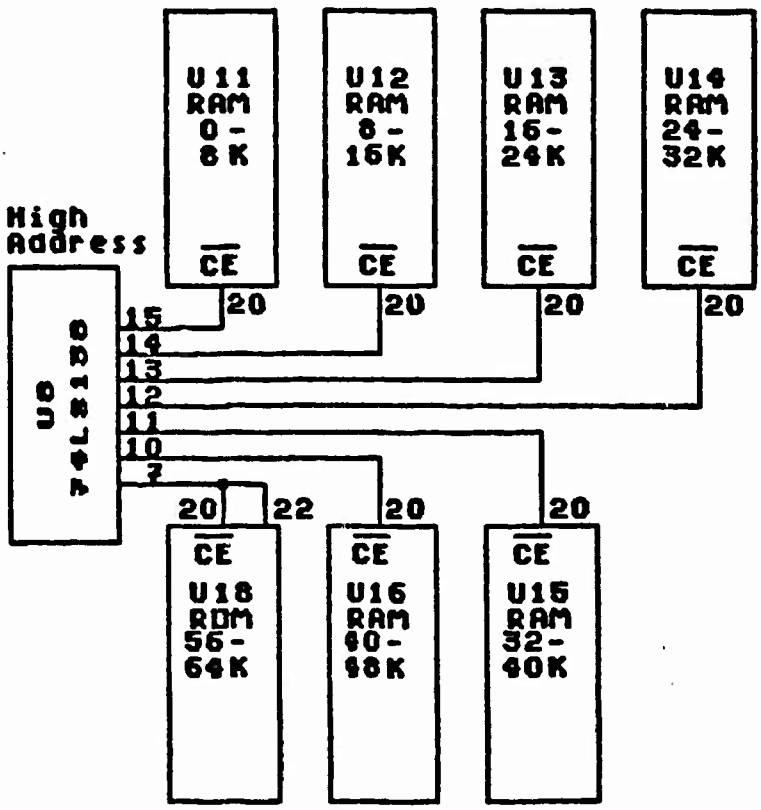

Fig. G.6 RAM/ROM Chip Enables

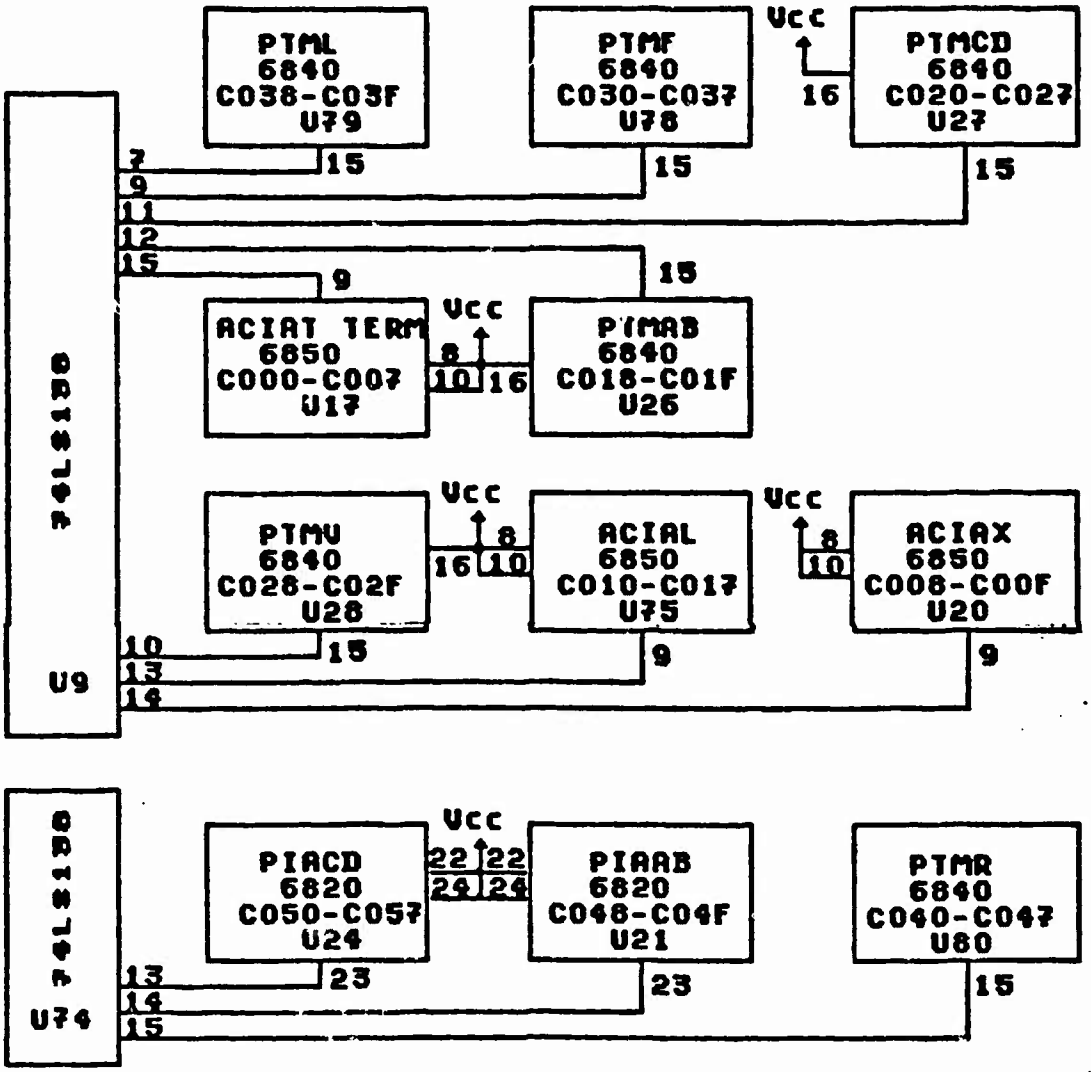

Fig.G.7 I/O Chip Enables

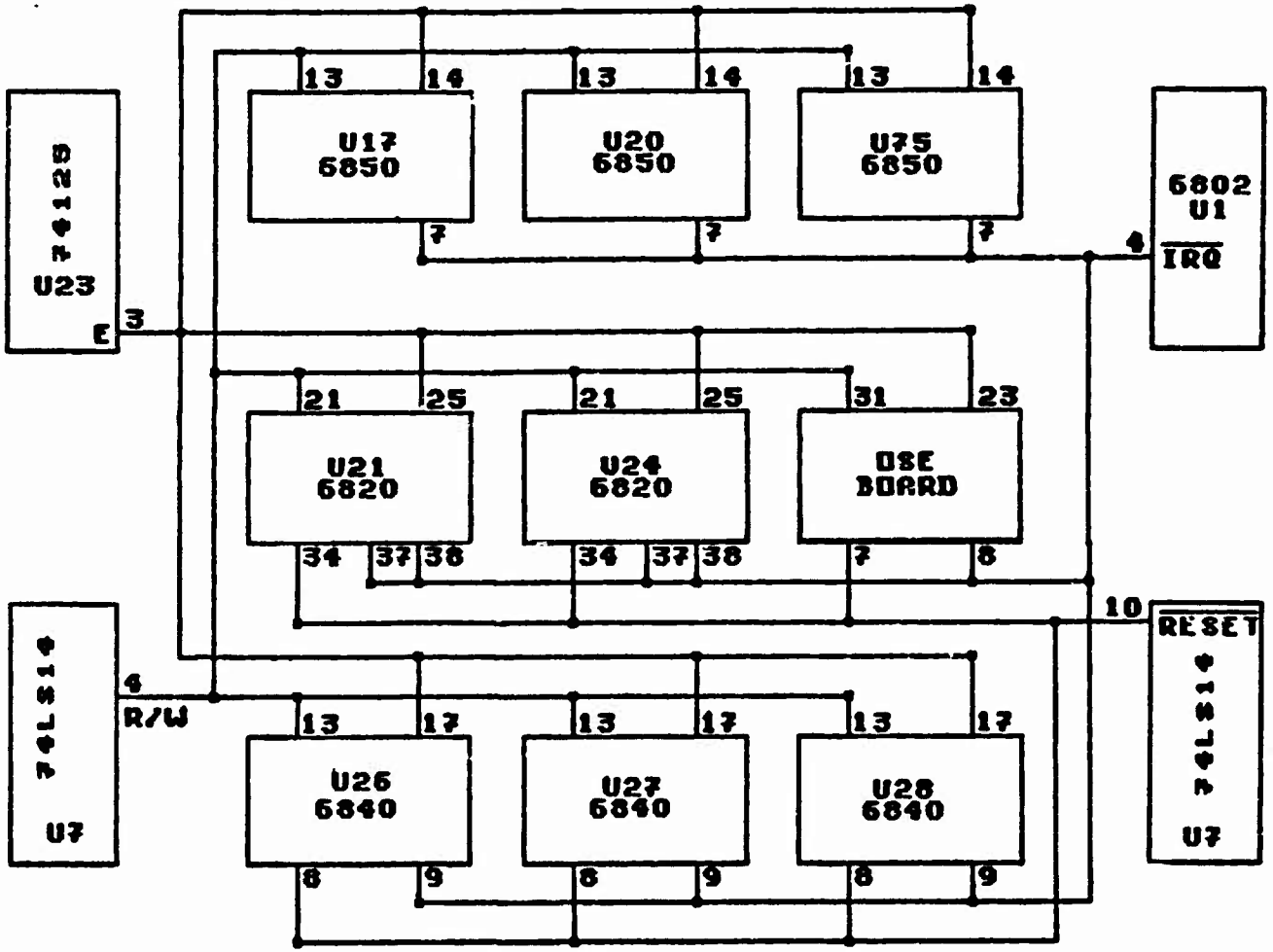

Fig. C.8 I/O Auxiliary Signals

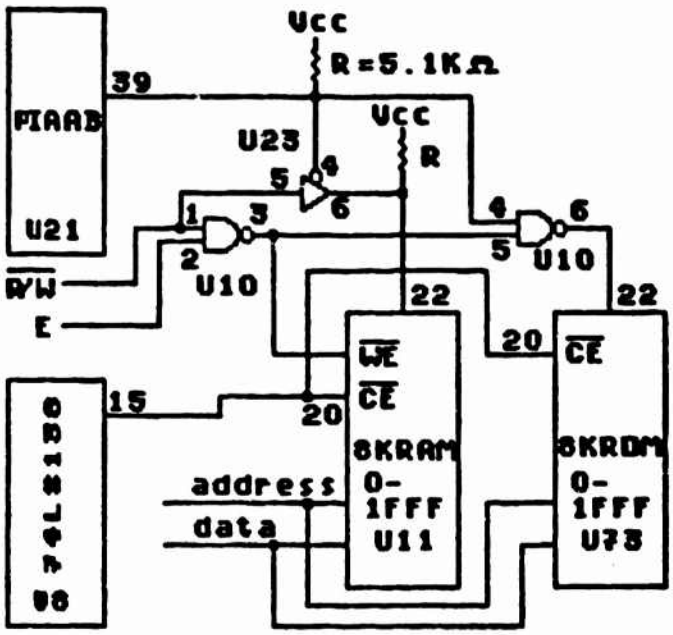

Fig. G.9 ROM Overlay RAM Circuit

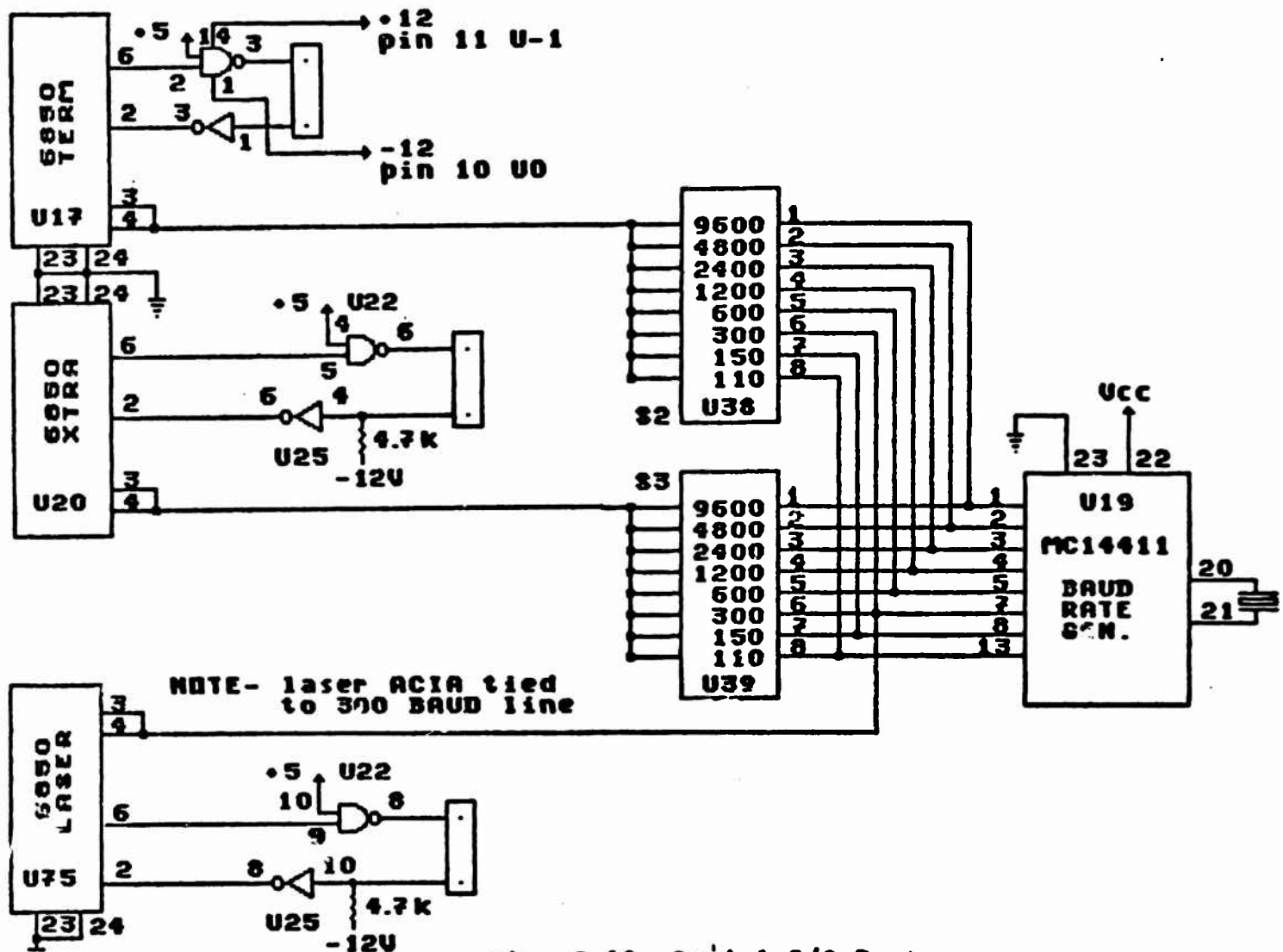

Fig. G.10 Serial I/O Ports

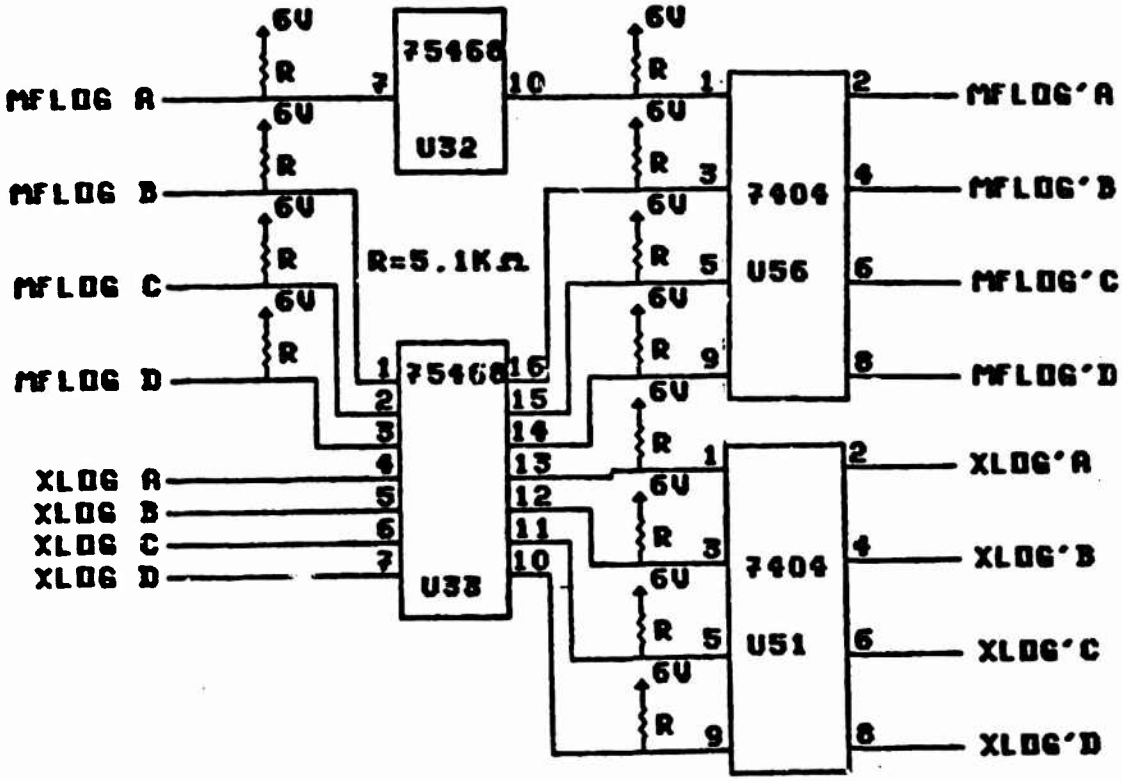

Fig. G.11 Buffered Sonar Signals

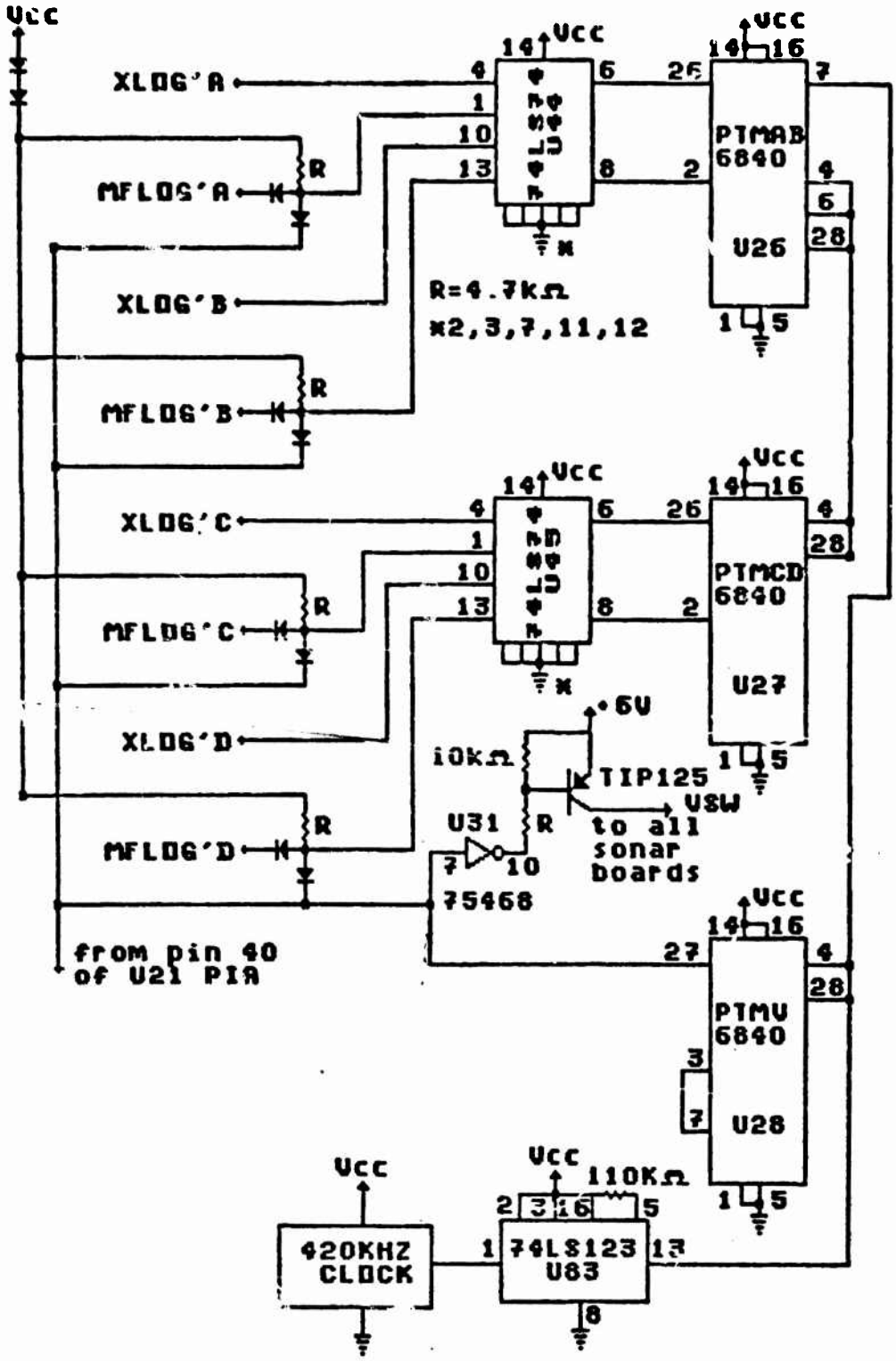

Fig. G.12 Sonar Timer/Range Board Interface

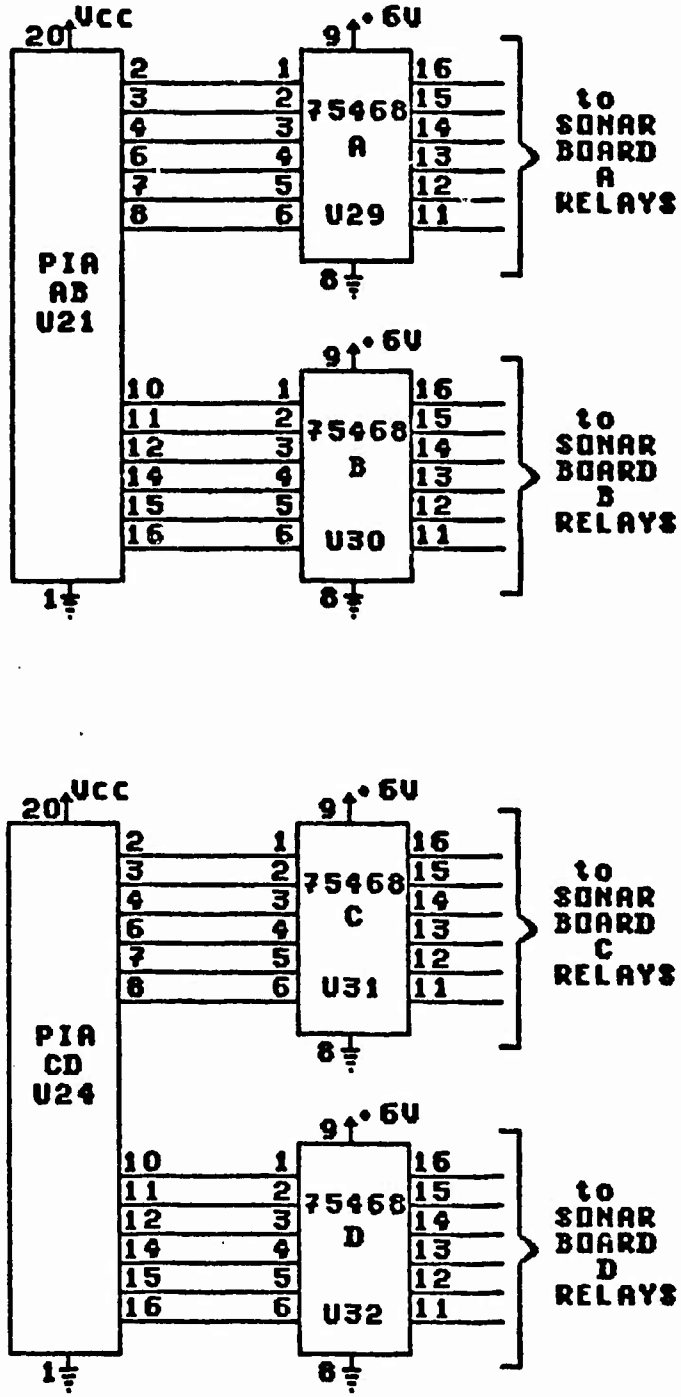

Fig. G-13 Sonar Transducer Selection Circuitry

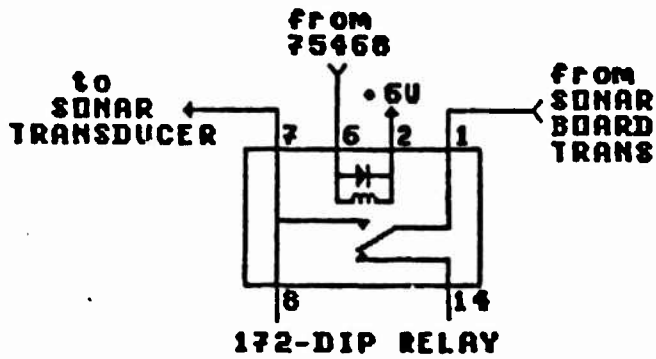

The transmit line of each SONAR BOARD is tied to eight relays. Each relay is tied to one SONAR transducer. A shielded coaxial line is used between each relay and each transducer.

Fig. G.14 Sonar Transducer Relay Interface

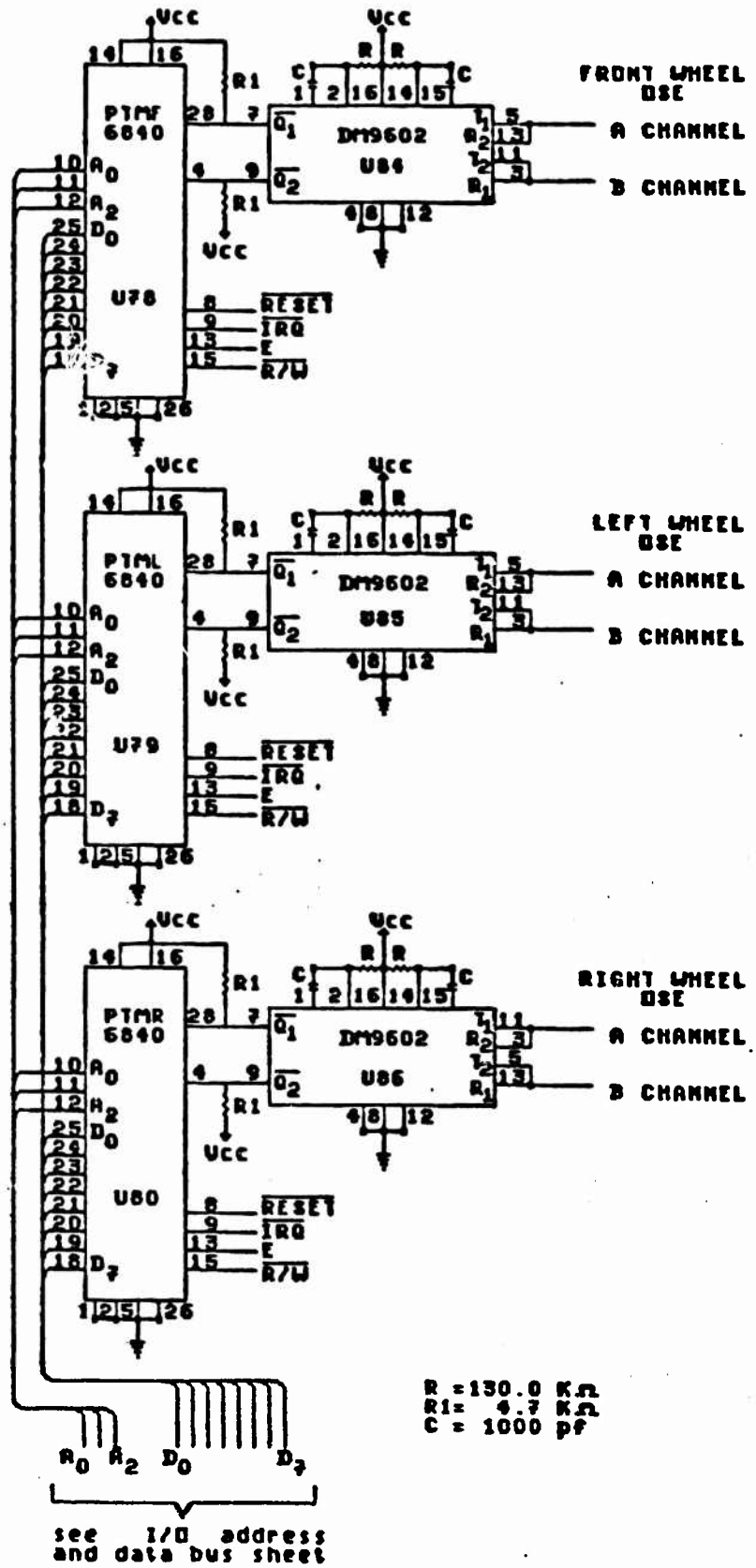

Fig. G.15 Optical Shaft Encoder Timer/Counter Circuit

C0	C1	C2	C4	C5	C6	D0	D1	D2	D4	D5	D6
13	14	15	16	17	18	19	20	21	22	23	24

12	11	10	9	8	7	6	5	4	3	2	1
B6	B5	B4	B2	B1	B0	A6	A5	A4	A2	A1	A0

Fig. G.16 24 Pin Sonar Transducer Header

VSW	6VDC	XLOG		GND	XMIT		MFLOG	6VDC	GND
20	19	18	17	16	5	4	3	2	1
1	2	3	4	5	16	17	18	19	20
GND	6VDC	MFLOG		XMIT	GND		XLOG	6VDC	VSW

Fig. G.17 Dual Sonar Range Board 20 Pin Header

D7	1	40	D6
D5	2	39	D4
D3	3	38	D2
D1	4	37	D0
	5	36	
	6	35	
RESET*	7	34	
IRQ*	8	33	
	9	32	
	10	31	R/W
A0	11	30	A1
A2	12	29	
	13	28	
	14	27	
	15	26	
	16	25	
	17	24	
	18	23	E
GND	19	22	
5VDC	20	21	

Fig. G.18 Optical Shaft Encoder Board 40 Pin Header

APPENDIX H

HERO-I TO MARRS-1 CONVERSION

CONTENTS OF APPENDIX H

FIG. H.1 DRIVE COMPUTER I/O UPGRADE.....H-2
FIG. H.2 MARRS-1 BATTERY CONFIGURATION.....H-2

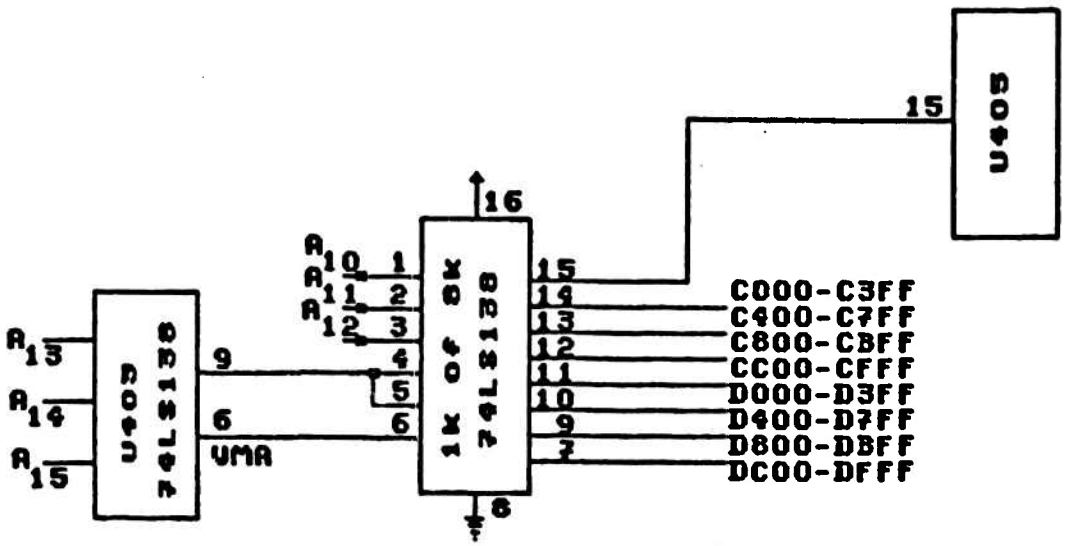

FIG. H.1 DRIVE COMPUTER I/O UPGRADE

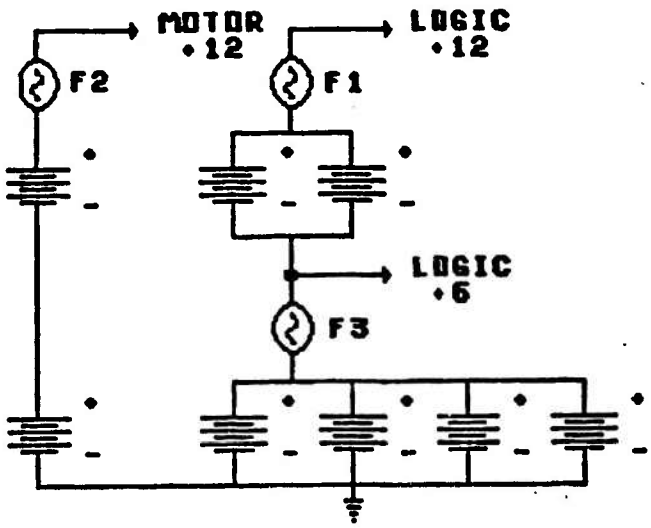

FIG H.2 MARRS-1 BATTERY CONFIGURATION

APPENDIX J

AFIT MOBILE ROBOTICS LABORATORY EQUIPMENT, COMPUTER HARDWARE, AND SOFTWARE

EQUIPMENT

QUANITY	DESCRIPTION
1	AFIT MARRS-1 ROBOT
2	WORK BENCH
1	SMALL TABLE
2	CHAIR WITH WHEELS
3	CHAIR
2	CHAIR, HIGH
1	TABLE, FOLDING
1	TABLE, EQUIPMENT
1	LAMP, DESK
2	LAMP, WORK BENCH
1	FAN
2	TRASH CAN
2	PAPER HOLDER, TYPIST
1	HP6236B POWER SUPPLY
1	BECKMAN 3010 UL DIGITAL VOM
1	BK 1570A OSCILLOSCOPE
1	ANDERSON-JACOBSON MODEM AD342
1	HP 1610A LOGIC STATE ANALYZER
1	RACAL-VADIC VA3414 1200/300 BAUD MODEM
2	STANDING BOOK CASE

COMPUTER HARDWARE

MARRS-1 NAVIGATION COMPUTER

MARRS-1 DRIVE COMPUTER

(MENOS I UPGRADE TO HERO COMPUTER BY VIRTUAL DEVICES)

HEATH H-89 COMPUTER

H-27 8 INCH DISK DRIVE SYSTEM

TRS 80 COLOR COMPUTER (64K EXTENDED BASIC)

5.25 INCH DISK DRIVE

TRS 80 COLOR MONITOR

TRS 80 CGP 115 COLOR GRAPHIC PRINTER

TRS 80 MULTIPACK INTERFACE

TRS 80 X PAD MODEL GT116

MOTOROLA 6800 EXORCISER COMPUTER SYSTEM

HEATH H125 DOT MATRIX PRINTER

COMPUTER SOFTWARE

WORDSTAR (EDITOR) BY MICROPRO INTERNATIONAL

MENOS I VAMP (ROBOT PROGRAMMING LANGUAGE BY VIRTUAL DEVICES)

ROBO C (C CROSS COMPILER FOR HERO ROBOT BY VIRTUAL DEVICES)

ROBO A (CROSS ASSEMBLER FOR HERO ROBOT BY VIRTUAL DEVICES)

MODEM 720 (PUBLIC DOMAIN COMMUNICATION PROGRAM)

TRS 80 EXTENDED COLOR DISK BASIC

OS-9 (OPERATING SYSTEM FOR TRS 80 COLOR COMPUTER)

BASIC09 (BASIC RUNNING UNDER OS-9)

APPENDIX K

datametrics

Datametrics Inc., 340 Fordham Road, Wilmington, Mass 01887 • Tel (617) 658-5410 TWX 710-347-7672

K3 SERIES KIT ENCODER INSTALLATION INSTRUCTIONS
(SQUAREWAVE VERSION)

1. MOUNTING ARRANGEMENT

Refer to Datametrics Dwg. B02537 for mounting surface arrangement. Note that (2) #4-40 X .18 deep tapped holes are called for. The two tapped holes are used to mount the kit encoder to the motor surface with #4-40 X 5/16 socket head screws.

Two #2-56 X 3/4 pan head screws are used to hold down the encoder cover. These screws thread into the encoder housing at the places indicated.

Note that an alternative mounting arrangement is possible. The two #4-40 mounting screws may be replaced by three #2-56 X 5/16 socket head screws located at the positions indicated on Dwg. B02537. In this case note that the two holes that are diametrically opposite in the encoder housing will have oversize clearance for #2-56 hardware. This clearance is reduced to appropriate size using the two fibre shoulder washers supplied with the unit.

2. INSTALLATION PROCEDURE

Step 1- INSTALL ROTOR/HUB ASSEMBLY

Slide rotor/hub assembly onto the shaft. A close sliding fit is desired. Excessive looseness can cause high rotor wobble. Slide the assembly to a position which will allow the rotor to enter the photohead gap with safe clearance both above and below the rotor disc. The bottom of the disc surface will be approximately 1/4" above the encoder mounting surface. Lightly tighten one hub set screw.

Note that the #4-48 hub set screws are much easier to handle if the hex wrench is held in a pin vise.

Step 2- INSTALL PHOTOHEAD ASSEMBLY

Slide the photohead assembly along the motor mounting surface so that the disc enters the photohead gap. Find the mounting hole locations and drop in the mounting screws. Be sure there is safe clearance above and below the disc. Tighten down the mounting screws. Note that the mounting hardware is easier to handle if a ball-tip Allen wrench is used.

Loosen the hub set screw and set the working air gap using the blue plastic shim. Insert the shim along the right side of the horseshoe opening as the opening faces you. Place the shim on top of the stator located on the upper right side of the horseshoe opening.

Step 3- ELECTRICAL CONNECTIONS
See Table 1.

Step 4- TEST ENCODER
Run the shaft at the desired speed and functionally test the encoder. The output signals' dc balance (symmetry) and quadrature phase relationship are factory set and should ordinarily not require adjustment. However, should finer trim be desired continue as follows: Adjustment pots are accessible on the photohead printed circuit board which allow a fine trim of the symmetry of the output signals. See Figure 2. The phase relationship of the output signals can be changed by movement of the photohead assembly on the mounting surface within the range of clearance around the mounting hardware. Both symmetry and phase adjustments described above can only be achieved while observing the output waveforms with an oscilliscope. See Figure 1.

CAUTION

ALWAYS APPLY DOWNWARD PRESSURE ON THE PHOTOHEAD ASSEMBLY WHILE ATTEMPTING PHASE ADJUSTMENT IN ORDER TO AVOID RUBBING THE DISC AGAINST THE STATOR.

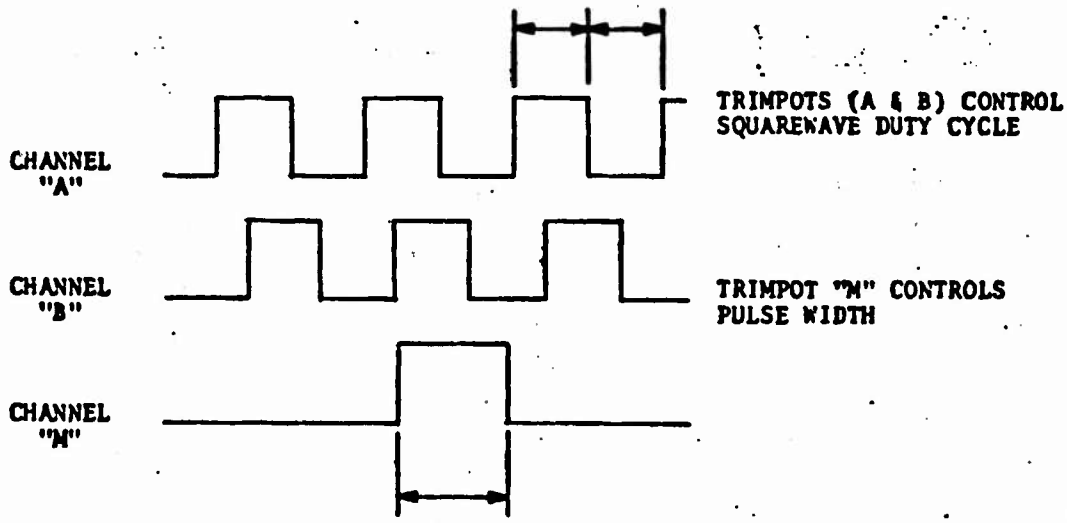

Figure 1 - Waveform Characteristics
(CCW rotation viewed from encoder end)

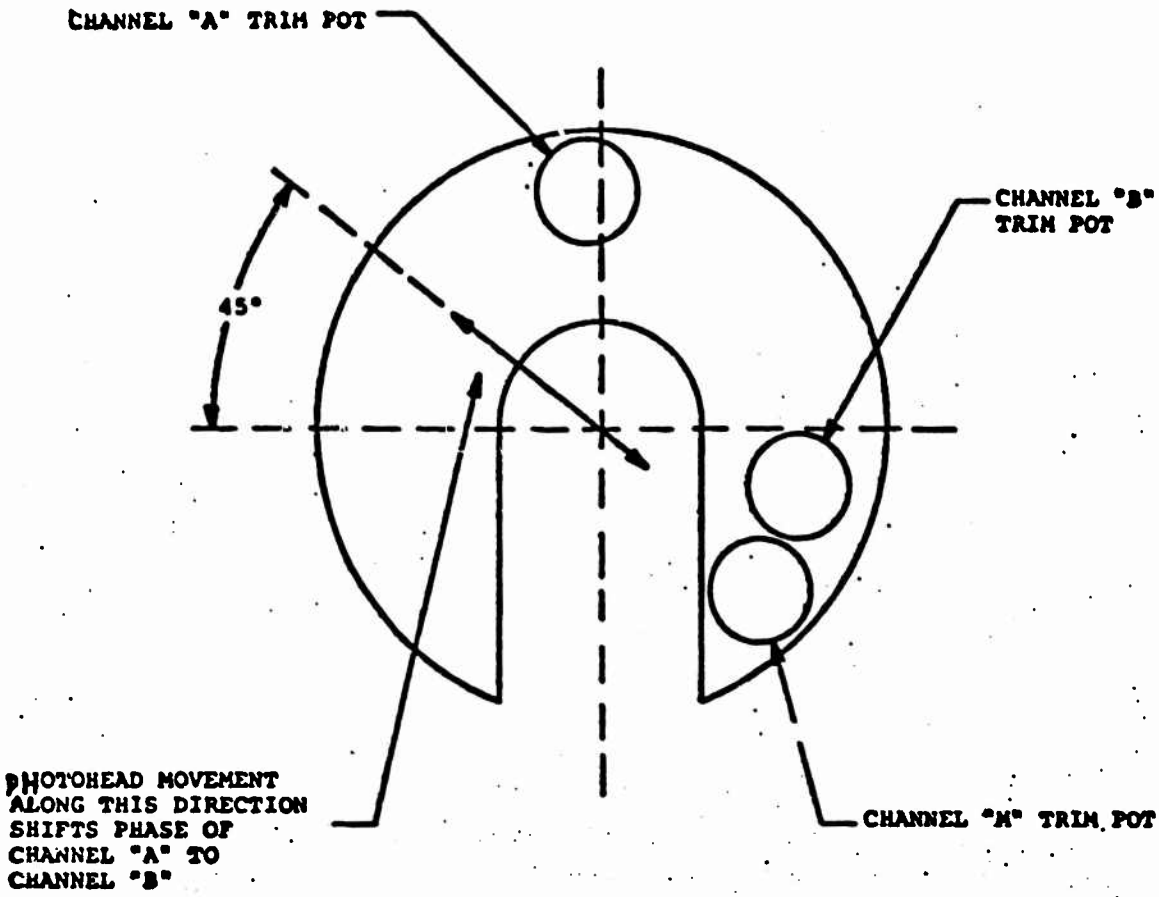

Figure 2 - Photohead Board
Pot Layout

NOTE: The trim pots are factory set and glyptolled. They ordinarily should not require re-adjustment.

Step 5 - INSTALL COVER
Install cover over encoder using (2) #2-56 screws provided. Do not over tighten cover screws.

Table 1 - Electrical Connections

Wire Color	Function
Yellow	Output A
Blue	Output B
Orange	Output M
Red	+V
Black	Ground

APPENDIX L

POLAROID ULTRASONIC RANGING SYSTEM

Unmodified Ranging Circuit Board #606191
Modified Ranging Circuit Board #606745

TECHNICAL DATA

General Description:

The ranging modules contains all necessary components to: generate the drive signal for the transducer; control timing functions; receive, amplify and filter the returned echo; and process this signal providing a step function output at the time of the received echo. The distance from the transducer to the target can then be computed with additional circuitry, knowing the speed of sound in air (or other gas), and the time interval between the transmit signal and the received echo as provided by the ranging module.

The #606745 board supplied with the designer's kit consists of a #606191 board which has had a six-wire, ribbon cable attached as shown on Figure 2 and has been modified as shown on Figures 4 and 5. The #606745 board does not have the transducer cable attached; however, this cable can be purchased from Polaroid by requesting Cable Assembly #604789.

Features:

Measurement range of 0.9 feet to 35 feet

Nominal resolution ± 0.12 inches to 10 feet
± 1% over entire range

Multiple measurement capability

Drives Polaroid Electrostatic Transducer which requires 50kHz 300V signal with no additional interface.

Designed to operate with the Polaroid Instrument Grade Electrostatic Transducer #604142.

Operation Conditions:

Supply Voltage	5.0 Vdc
Continuous Operating Current	250 mAmp
Peak Current During Transmit	2.5 Amp
Temperature Range	0 to 40 Deg. C.

Unmodified Ranging Circuit Board #606191
Modified Ranging Circuit Board #606745

Schematic:

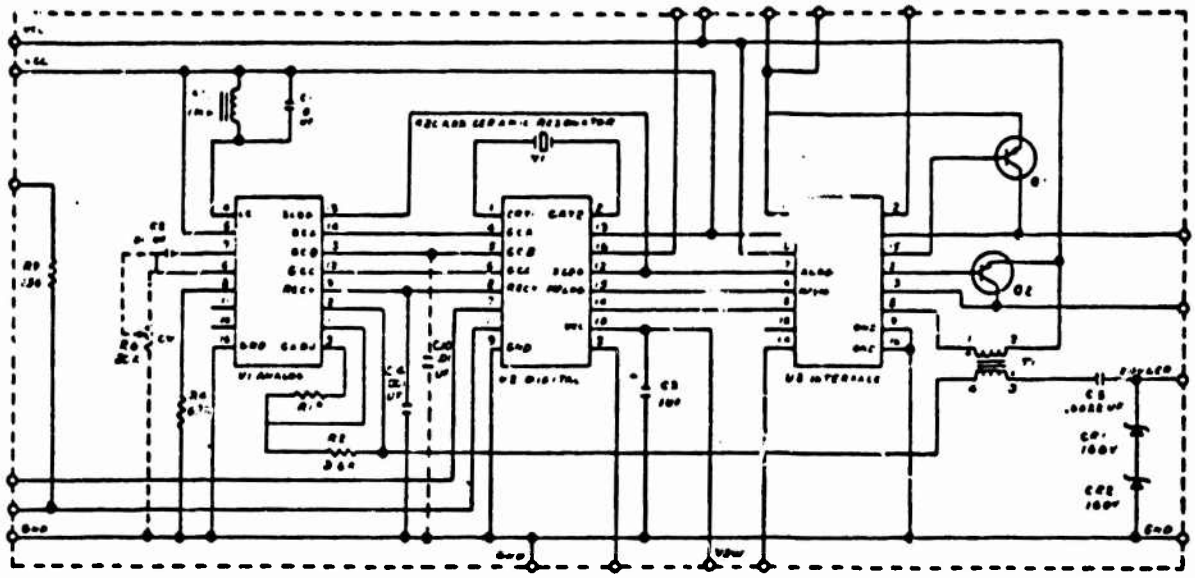

NOTES: 1. R1 is selected to set gain 2. R6 & C10 are only added if necessary at factory

FIG. 1

Interconnect Diagram:

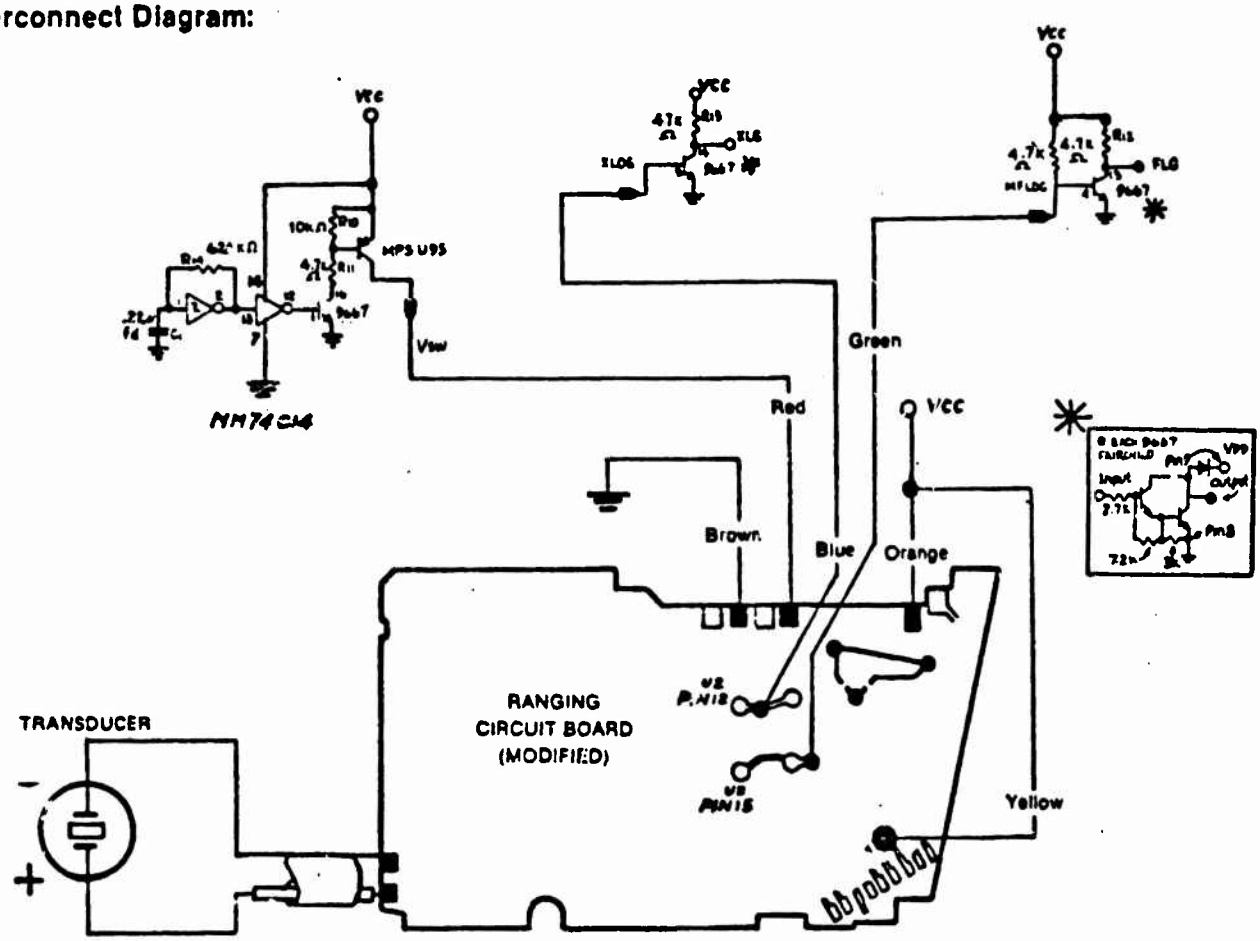

NOTE: Color Codes are for the ribbon cable supplied with #606745 Modified Ranging Circuit Board.

VCC (+) 8.0 Vdc
2.5 Amps

FIG. 2

Unmodified Ranging Circuit Board #606191
Modified Ranging Circuit Board #606745

Signal Description:

NAME	DESCRIPTION	Wire Color On #606745
VCC	Positive, Power Supply	Yellow & Orange
VSW	Starts a transmit/receive cycle when taken high Resets for next cycle when taken low	Red
XLOG	Transmit detect, use first falling edge after VSW high	Blue
MFLOG	Receiver detect, goes low when an echo is detected	Green
GND	Ground, power supply	Brown
XDUCER	Transducer input	—
GND	Transducer ground	—

Electrical Characteristics:

PARAMETER	MIN.	TYP.	MAX.	UNITS
Supply Voltage	4.9		6.8	Vdc
Continuous Operating Current			250	mAmp
Peak Current (during transmit)		2.5		Amp
VSW				
Vih	4.0		Vcc	Vdc
Iih	100			mA
Vil			0.4	Vdc
XLOG				
Voh	2.0			Vdc
Vol			0.8	Vdc
Iol			0.5	mA
MFLOG				
Voh	2.0			Vdc
Vol			0.8	Vdc
Iol			1.0	mA

Unmodified Ranging Circuit Board #606191
Modified Ranging Circuit Board #606745

Timing:

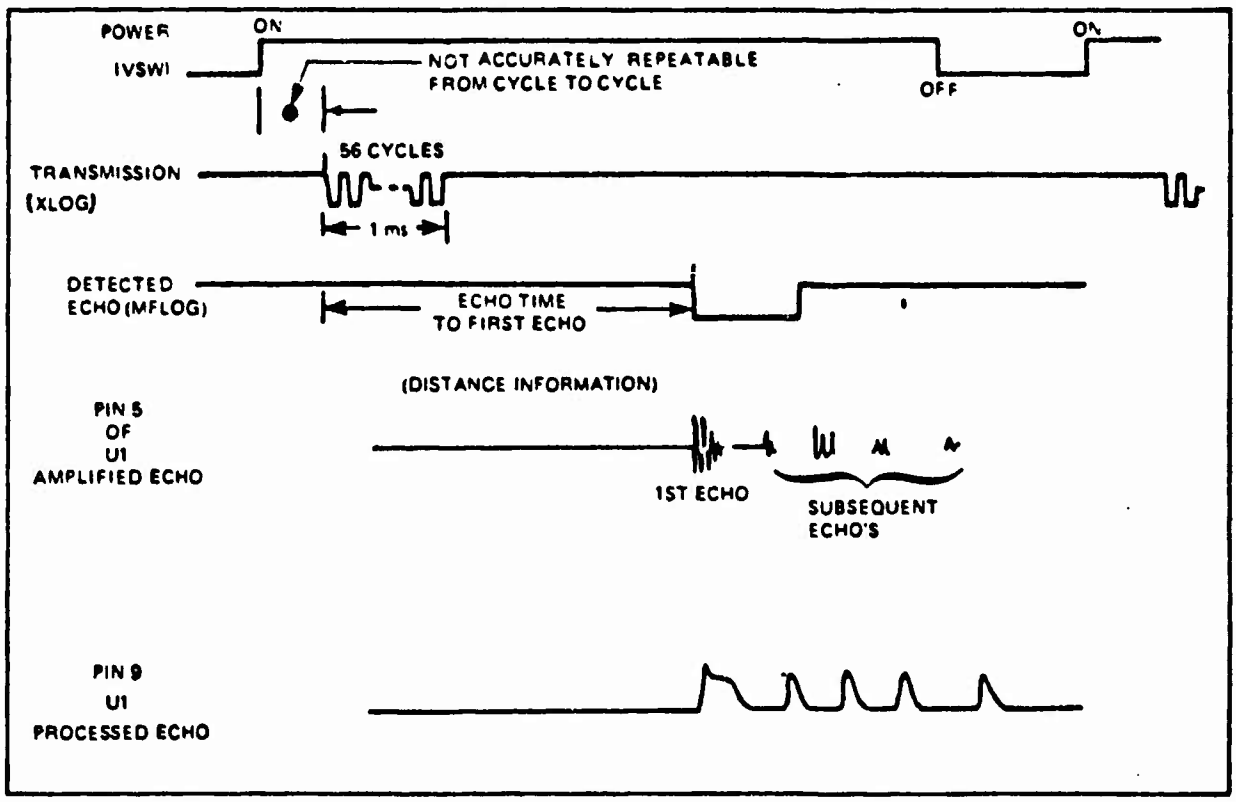

Unmodified Ranging Circuit Board #606191
Modified Ranging Circuit Board #606745

Typical Relative Gain Bandwidth:

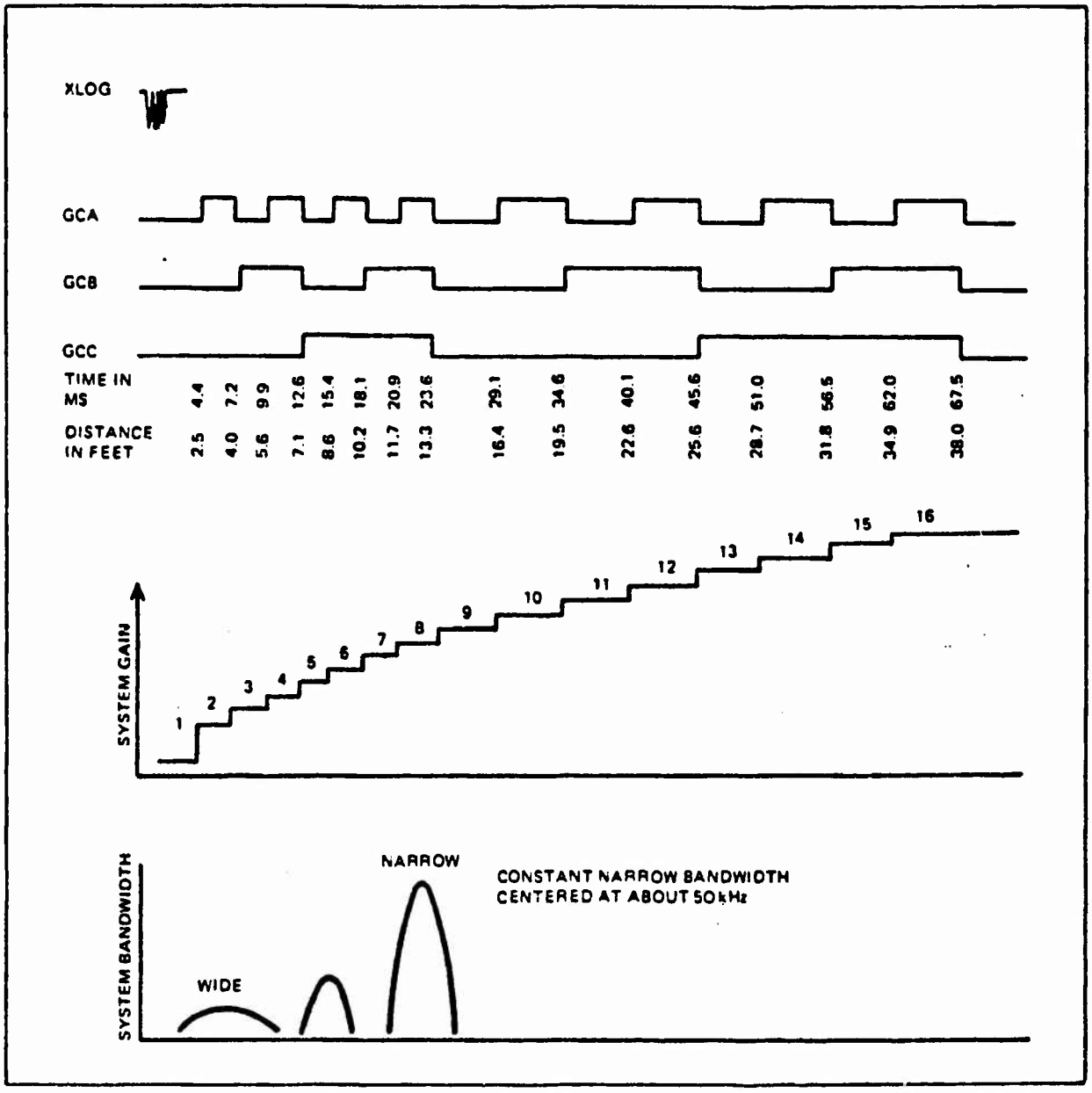

Unmodified Ranging Circuit Board #606191
Modified Ranging Circuit Board #606745

Parts List:

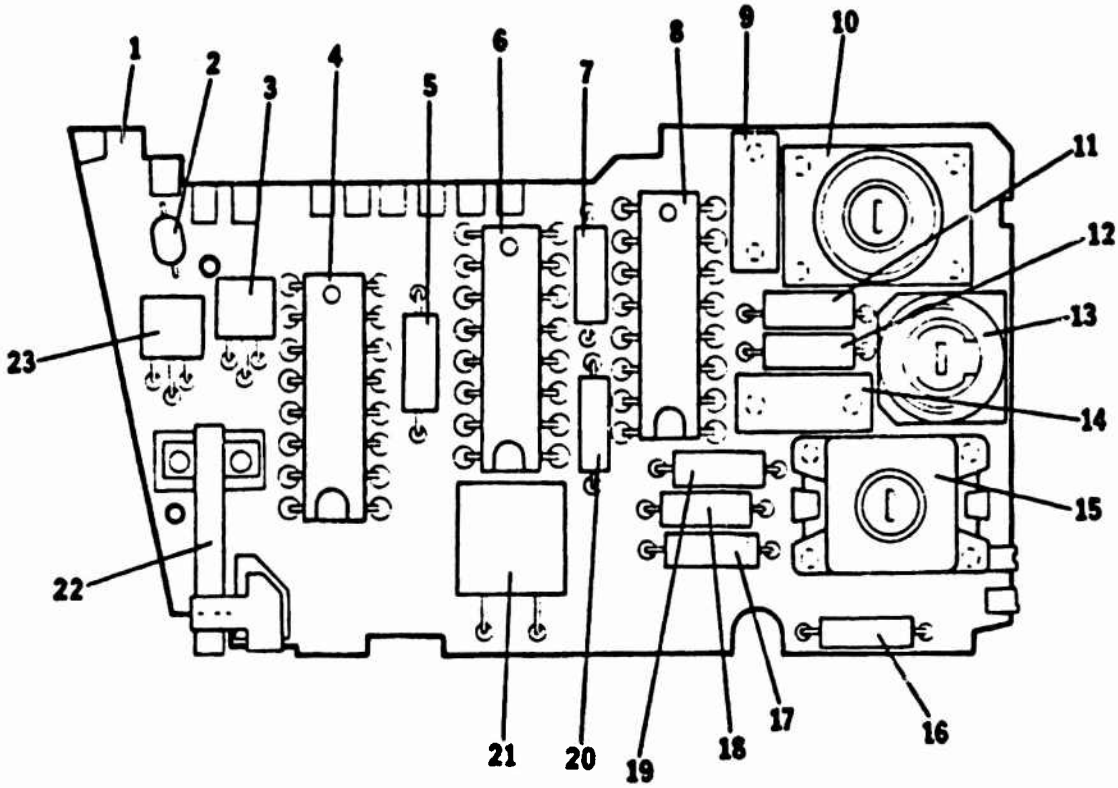

ITEM	REF.	DESCRIPTION
1		P.C. BOARD
2	C3	CAPACITOR 1μf, 35V
3	Q2	TRANSISTOR
4	U3	POWER IC
5	R9	RES. 150 Ω
6	U2	DIGITAL IC
7	C4	CAPACITOR .001μf, 10V
8	U1	ANALOG IC
9	C1	CAPACITOR .01μf, 10V
10	L1	TUNED CIRCUIT INDUCTOR
11	C2	CAPACITOR .01μf, 10V
12	R4	RESISTOR (62K, 5%, ¼W)
13	R6	VARIABLE RESISTOR (25K, ¼W) (See Note 2)
14	C5	CAPACITOR .0022μf, 400V
15	T1	TRANSFORMER
16	R1	RESISTOR (1-10K, 5%, ¼W) See Note (1)
17	CR1	DIODE ZENER (IN4006)
18	CR2	DIODE ZENER (IN4006)
19	R2	RESISTOR (130K, 5%, ¼W)
20	C10	CAPACITOR .01μf, 10V See Note (2)
21	XTAL	CRYSTAL 420 kHz
22	S1	SWITCH
23	Q1	TRANSISTOR

NOTE: 1. Resistor Value Set at Factory

NOTE: 2. Only Added If Necessary at Factory

Unmodified Ranging Circuit Board #606191
Modified Ranging Circuit Board #606745

Dimensions

SIZE MAX DIM.
3.025 IN. X 1.652 IN.
X 0.520 IN.

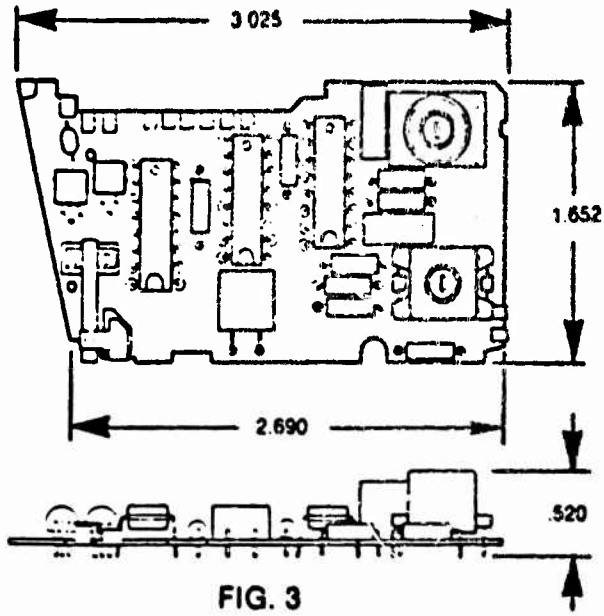

FIG. 3

Application Notes:

The ranging modules #606191 and #606745 are designed to function with the Polaroid Instrument Grade Transducer #604142.

Power the module through VCC. Next bring VSW high. The transmit burst of 56 pulses will begin approximately 5 msec later. The 56 pulses consist of 8 cycles at 60 kHz, 8 cycles at 56 kHz, 16 cycles at 52.5 kHz and 24 cycles at 49.41 kHz and lasts for a period of about 1.0 msec. Detected transmit can be observed at U2-12. The receiver is blanked for 1.6 msec. If an echo is not detected within 62.5 msec MFLOG will go high. Also if an echo is detected before 62.5 msec and after 1.6 msec MFLOG will go high.

Range information is determined by the time interval between the first falling edge of XLOG and the falling edge of MFLOG. The speed of sound in air is:

$$C = 331.4 \sqrt{\frac{T}{273}} \quad \text{M/Sec}$$

C = Speed of sound in air

T = Temperature in degree Kelvin

(Kelvin = Celsius + 273)

M = Meters

Sec = Seconds

To initiate another range measurement bring VSW low then high again while leaving VCC on.

The system (transducer and ranging module) gain is set to detect a 1.34 inch diameter sphere at 4 feet 3 inches on the acoustic axis.

If the ranging circuit board contains R6, adjustments are not recommended. R6 can change system gain and will change these specifications. If R6 is needed, refer to the parts list for installation location and specification. C2 will have to be relocated to the unused pad connected to the R6 wiper.

Unmodified Ranging Circuit Board #606191
Modified Ranging Circuit Board #606745

Modifications:

The Ultrasonic Circuit Board (#606745) included with the Ultrasonic Designer's Kit has been modified for use in ranging applications. Module #606191, ordered separately, will have to be modified by the purchaser to achieve the same performance. Other changes could be necessary for a particular application. Refer to the figure below to see how the ranging module #606191 must be altered to obtain performance similar to that of module #606745 in the kit. Make the alterations as follows:

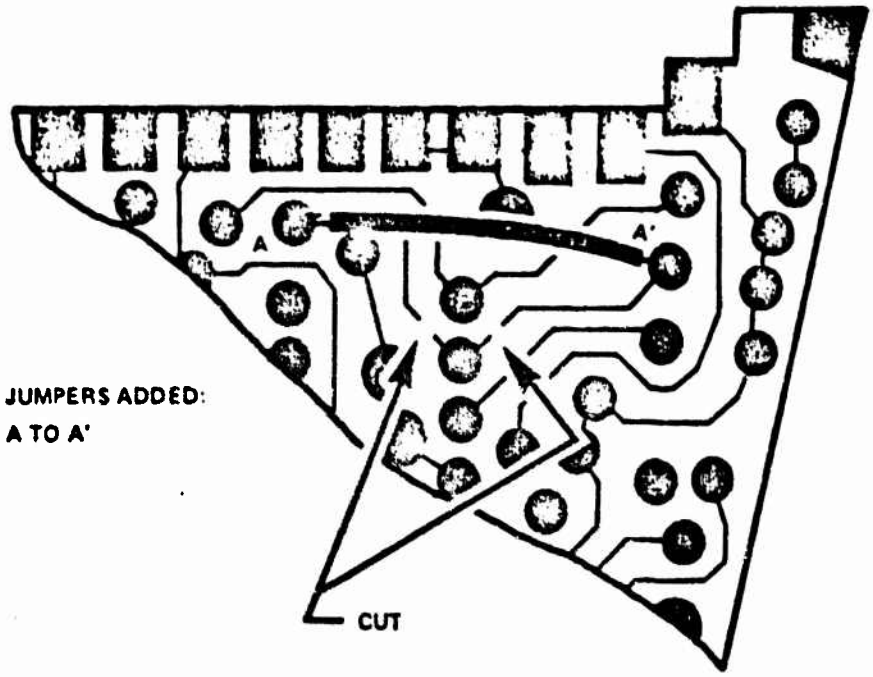

FIG. 4

A. Cut the metallic circuit path on the board at the two points indicated by the arrows. Scrape the metal away or use any other effective method.

B. Solder 1 jumper wire to the board as shown: between points A and A'.

C. Cut switch as shown.

FIG. 5

For additional information or technical assistance contact:

Polaroid Corporation
Battery Division
784 Memorial Drive - 4A
Cambridge, Massachusetts 02139
(617) 577-4681

Specifications Subject
To Change Without Notice

BD-263 "Polaroid" and "Polapulse"®
Printed in U.S.A. 7/83

Appendix M

6800 Hex File Format

The 6800 Hex file format provides a compact representation of binary data patterns for transmission using ASCII communication terminals.

The Hex file is organized into data records with each record containing information in the same format. The record information consists of type, length, address, data and checksum. All records begin with an 'S' character for start of record identification. All information in the file which is not between a start of record and the checksum is ignored.

TAPE FORMAT

ASCII Character	Description
1	Start of record (S)
2	Type of record 0 — Header record 1 — Data record 9 — End of file record
3—4	Byte Count Since each data byte is represented as two hex characters, the byte count must be multiplied by two to get the number of characters to the end of the record. (This includes checksum and address data.)
5, 6, 7, 8	Address Value The memory location where this record is to be stored.
9, ..., N	Data Each data byte is represented by two hex characters.
N+1, N+2	Checksum The one's complement of the additive summation (without carry) of the data bytes, the address, and the byte count.

Example Data Record

Memory Contents

Address	Data
A000	10
A001	1A
A002	20
A003	2A

Data Record Contents

Character		Tape	
1	Start of record	53	S
2	Type of record	31	1
3	Byte count	30	0
4		37	7
5		41	A
6		30	0
7	Address	30	0
8		30	0
9	Data byte 1	31	1
10		30	0
11	Data byte 2	31	1
12		41	A
13	Data byte 3	32	2
14		30	0
15	Data byte 4	32	2
16		41	A
17	Checksum	38	8
18		34	4

Checksum

Byte Count #2

The format for all hexfile records is diagrammed below.

Character		Header Record		Data Record		End-of-File Record	
1	Start of Record	53	S	53	S	53	S
2	Type of Record	30	0	31	1	39	9
3	Byte Count	31	12	31	16	30	03
4		32		36		33	
5	Address (if any)	30	0000	31	1100	30	0000
6		30		31		30	
7		30		30		30	
8		30		30		30	
9	Data	34		39	98	46	FC
10		38		38		43	
.		34		30	02		(Checksum)
.		34		32			
.		35		.			
.		32		.			
.				.			
.				41			
.				48	A8 (Checksum)		
N	Checksum	39	9E				
		45					

APPENDIX N

NAVIGATION COMPUTER SOFTWARE USER'S MANUAL

(EXTRACTED IN PART FROM AMERICAN MICROSYSTEMS 6800 PROTOTYPING MANUAL.)

THE NAVIGATION COMPUTER SOFTWARE IS COMPRISED OF THE MIKBUG AND PROTO OPERATING SYSTEMS, A ROM SUBROUTINE LIBRARY (RS13, A SYSTEM HARDWARE INITIALIZER, AND A SYSTEM MASKABLE INTERRUPT HANDLER. MIKBUG IS SELDOM USED EXCEPT BY SPECIAL COMERCIAL SOFTWARE SUCH AS BASIC INTERPRETERS. THE PROTO OPERATING SYSTEM RESPONDS TO THE COMMANDS DESCRIBED IN THE FOLLOWING PARAGRAPHS. A COMMAND CONSISTS OF A ONE CHARACTER COMMAND IDENTIFIER FOLLOWED BY ADDITIONAL PARAMETERS IF NEEDED, SEPERATED BY BLANKS OR COMMAS. ALL COMMANDS END WITH A CARRIAGE RETURN. SINCE NO ACTION IS TAKEN BEFORE THE CARRIAGE RETURN, AND INPUT LINE MAY BE DELETED BY USE OF THE ESCAPE KEY. (PAPER TAPE AS A STORAGE MEDIA IS MENTIONED IN THE FOLLOWING PARAGRAPHS. IT SHOULD BE INTERPRETED AS THE DEVICE OR MEDIA WHICH IS USED TO STORE AND RETRIVE DATA IN THE ROBOT TO EXTERNAL COMPUTER SYSTEM.)

L, ADDL, ADDH, OFFSET

The Loadfile command loads data from a hex formatted file. (see Appendix M) into the user's memory between ADDL and ADDH, inclusive. The OFFSET is added to the memory address specified on the tape to form the actual memory starting address for the data stored. If a byte to be stored into memory has an address outside of the range ADDL, ADDH, it is not entered into memory, but a Delete character (H'FF) is transmitted to the terminal.

Example: L 0100 02FF FFFA

The address range in the L command is optional, and if omitted is assumed to be the full range of memory (0000—FFFF). The offset parameter is also optional, and if omitted is assumed to be zero (0000). Thus the L command with no parameters loads the tape into the memory locations specified on the tape with no offset. The offset value in the L command is a two's complement signed number, entered in unsigned hexadecimal. For example, an offset of -6 is entered as FFFA.

If an attempt is made to load non-existent memory, or ROM, the loading operation will terminate, typing out the address and the message "BAD ADR".

In operating the Load command, PROTO goes into a receive md and scans thefile for the first ASCII "S", which indicates start of record. It is not necessary to position the fileat the first record of a file since each record contains its own starting address.

PROTO will load data records until it encounters an end of file (EOF) record or a file error (Check Sum or illegal character). When PROTO reads a header record (start of record and address), it translates the header into ASCII characters and prints the result. The Check Sum is the binary sum of all characters in the block.

PROTO does not list thefile contents as the file is being read.

When PROTO encounters an end of file record or a file error, it turns off the reader and prints "EOF" or "CKSM ERR" respectively.

P, ADDL, ADDH, OFFSET

The Put hex file command causes PROTO to create a hex file of the contents of memory between ADDL and ADDH, inclusive. Each record is created with a four-digit hex address of the starting byte of the record. This address is derived from the memory address of the byte being filed , plus the offset value, OFFSET. The offset is optional, and if omitted is assumed to be zero.

Records using this command (except the last record) contain 16 bytes of data plus the start code, byte count, address, and the checksum.

The P command does not cause an EOF record to be created so that several disjoint blocks of memory can be combined into one file.

Example: P F000 F07F 0F00

S, ADDR, BYTE1, BYTE2, ---, BYTEN

The Set memory command writes the 8-bit data words specified by BYTE1 to BYTEN into consecutive memory locations starting at ADD. If ADD has more than 4 (hexadecimal) characters or if any of the data bytes have more than 2 characters each, only the last 4 or 2 characters are used respectively.

Example: S 0000 86 05 97 28

Memory locations at 0000 thru 0003 are loaded as shown.

D, ADDL, ADDH

The Display memory command prints the contents of memory between ADDL and ADDH, inclusive, in hex format. Up to sixteen bytes per line are printed, preceded by the hexadecimal address of the first byte of the line.

G, ADDR

The Go command starts execution of the user program at the address specified by the input parameter. To insure that all registers contain the same information they held before the user program was interrupted, PROTO pushes into the stack the copy of the user registers that it keeps at locations BFEA-BFF2 (CC, B, A, X, P, S) then executes an RTI instruction. The user can change the initial values of the registers by changing the contents of these locations.

Example: G 300

Program will branch to address 0300 and start execution from that point.

R

The Registers command prints the contents of memory locations BFEA-BFF2 which contain the values that were in the user's C, B, A, X, P, and S registers (in that order) when the user's program was last interrupted.

M, ADDL, ADDH, DEST

The Move command copies memory from the range ADDL — ADDH, inclusive, to the RAM locations starting at DEST. This copy begins at the lower address, so if DEST lies within the range ADDL — ADDH, some of the original data will be lost, and other parts will be duplicated.

E

The End of Transmission command is used to cause an EOT character to be punched on the paper tape. After a field has been punched, an EOT will terminate the record and punch a trailer tape. When reading a record, the reader will stop at the EOT character. If no EOT character is present, the reader must be manually turned off and the Reset switch must be pressed to enter the operating system program.

C

Cold start at address 0100H in the system. Presently this has the effect of executing the extended interrupt handler that was loaded into RAM from ROM during power-up. Data from the optical shaft encoders and the four sonar range boards are sent thru the terminal serial port of the navigation computer to whatever device is connected to it at 9600 baud. (The extended interrupt handler, when active, will respond to the following commands:

Control S	Stop sending data.
Control Q	Resume sending data.
Control C	Restart Nav computer.
1	Select sonars 1 at a time.

2 Select sonars 2 at a time. 3 Select sonars 3 at a time. 4 Select sonars 4 at a time.) If the ROM located at U7 is replaced with a ROM containing a 6800 BASIC interpreter then a cold start of BASIC is made.

W

Warm start at address 0103H in the system. This command is only effective if the ROM located at U7 is replaced with a ROM containing a 6800 BASIC interpreter. However, PROTO will jump to address 0103H any time this command is given irreguardless of the contents of that location.

O

Odyssey command. Causes PROTO to jump to address 02001H in the system.

INTERRUPTS

Of the four available interrupt vectors, RESET and SWI are used by PROTO. IRQ is used by the Sonar/Optical Shaft Encoder/Tic Time system. NMI is not used and is available for future designs. All interrupt vectors are in RAM except RESET so that a program can reconfigure the interrupt structure. A hardware RESET always returns the user to the PROTO operating system after a hardware initialization and ROM to RAM overlay has been performed.

The upper memory locations are ROM. If the user expects either NMI or IRQ interrupts to occur, he may reinitialize the vector addresses to the starting address of his IRQ and NMI handler routines by changing addresses BFF7-BFFF.

PROTO must have control of the RESET vector so that the RESET switch on the Prototyping Board can return program control to PROTO at any time.

The reset routine copies the contents of the B, A, X, CC, and S registers into a fixed area of memory. This means that the program can be aborted at any time by using the reset switch while still saving all the registers except the program counter. Unfortunately, the contents of the program counter are lost.

It is possible for the user to use the NMI interrupt to abort a program execution without losing the contents of the P and C registers. This condition is automatically set in the NMI handling routine when PROTO is called. This interrupt vector will cause the contents of the user's registers to be printed when the $\overline{NMI}$ lines goes low.

Since the SWI instruction is used to call subroutines between 00 and H'18 from (RS)[3] as described later in "The Subroutine ROM", the user is somewhat limited in the ways he can use SWI instructions. However, he can access an SWI handler routine in his own program by an SWI instruction followed by a byte containing the decimal number less than H'80 but greater than H'19 < n < H'80 sequence, PROTO passes control at address BFF3. If the user expects to access his own SWI routine and use PROTO, he must use the Set Memory command to store the address of this routine at locations BFF3 and BFF4.

PROTO makes sure that the user's SWI routine is entered from the stack with all registers containing the same information that they would hold if the routine were entered directly through the SWI vector.

EXTENDED INTERRUPT HANDLER

The extended interrupt handler that was loaded into RAM from ROM during power-up sends data from the optical shaft encoders and the four sonar range boards thru the terminal serial port of the navigation computer to whatever device is connected to it at 9600 baud. The extended interrupt handler becomes active when the Gold command is given from PROTO. The Nav computer will then respond to the following commands ONLY:

Control S	Stop sending data.
Control Q	Resume sending data.
Control C	Restart Nav computer.
1	Select sonars 1 at a time.
2	Select sonars 2 at a time.
3	Select sonars 3 at a time.
4	Select sonars 4 at a time.

THE SUBROUTINE ROM

Many of the monitor's functions are accomplished with the help of the Re-Entrant Self-Relative Subroutine ROMs (RS)³. This standard ROM, which can be considered a software extension to the 6800 instruction set, is also available to be used by the user both on the prototype board and in his final production system. The user can call one of the 25 (RS)³ subroutines with an SWI instruction followed by the number of the desired subroutine. The details of the subroutines available in the (RS)³ user's manual.

The user should be aware of the fact that the (RS)³ pushes from 7 to 10 bytes of data onto the stack, depending upon which subroutines are called. This means that if the user calls (RS)³ routines, he must make sure that the necessary memory space is available for stack expansion.

Since PROTO assigns its own stack area, the user need not be concerned about how (RS)³ is used.

BREAKPOINTS

Breakpoints allow the user to halt his program and examine the contents of the internal registers. PROTO provides two types of breakpoints. In this system, breakpoints are actually debugging routines that can be called from the user's program just like (RS)³ routines.

Each breakpoint requires a two byte calling sequence: an SWI instruction followed by a number.

Breakpoints may be inserted either by reassembling the program with the extra SWI instructions added the Set Memory command may be used to replace parts of the code with SWI instructions. Note that the second method is not satisfactory for the snapshot option (described below) since the replaced code must be restored before execution can be continued. When using the second method, the user must make sure that he replaces the first two bytes of an instruction. If the SWI replaces the second or third byte of an instruction, it may be interpreted as an address rather than an opcode.

The different types of breakpoints are:

1. Print registers (SWI, H'80)
2. Snapshot (SWI, H'81)

The sequence SWI, H'80 saves the user's registers at the vector stored in BFF1-BFF2 , prints their contents (in the order CC BB AA XXXX PPPP SSSS), then returns control to PROTO.

The sequence SWI, H'81 prints out the contents of the user's registers then continues executing the user's program starting at the address following the byte containing the number H'81. Note that if this address does not contain a valid opcode, unpredictable results will occur.

Reentrant Self-Relative Subroutine ROMs (RSRSRS) = $(RS)^3$

The cost of microprocessor software development is many small items: the cost of assembly time, storage time, transmission time, loading time, design, development, documentation and debug. The cost of many of these items continues to accumulate even though a subroutine library exists for common functions, in particular the time and cost of transmission, loading and ROM pattern generation.

The purpose of Reentrant Self-Relative Subroutine ROMs $(RS)^3$ is to give the user a hardware subroutine package which exists in the breadboard design from the beginning. The programs are documented, debugged and constitute some of the most commonly performed subroutines that assembly language programmers generate. The subroutines are not complex and are not intended to be. Any subroutine could easily be reproduced by a user; however, the intention is that the routine exists now and the user does not have to reproduce it. The routines tend to be slow because of their generality but the intention is immediate availability. If a particular program is time critical, it can be regenerated later when the time critical elements are known

CONCEPTS

The $(RS)^3$ uses a number of concepts to allow flexibility in the user environment. The first concept is self-relative programming. This simply means that the program will function correctly regardless of where it is located in memory. The user will need to know where it is located so he can reference it. However, this actual location will only have to be recorded once. The self-relative program uses relative address instructions for program control and the index and stack pointer instructions for data manipulation.

The stack is used for temporary storage of data to prevent $(RS)^3$ from being tied to fixed addresses. This allows the program to be reentrant; i.e. the program can be called at different times without completing the previous call. This means that the same routine can be called by the interrupt processor as well as by the program which was interrupted. The concept of reentrant code is not to be confused with recursive code; even through recursive coding could have been used in the subroutine package, it is not.

The subroutine calling mechanism uses the SWI instruction followed by a single byte index for the particular subroutine invoked. This was chosen because the SWI is the most convenient from an internal programming viewpoint and the safest. It is safe because an error in a ROM can be corrected by replacing the subroutine ROM without altering any other user ROM. If direct addresses to subroutine code exist in the user's domain, his ROMs would change if the location of the routine in the $(RS)^3$ changed.

IMPLEMENTATION

The user places the base address of the $(RS)^3$ into the SWI vector address. Each SWI instruction requires an index byte to follow the SWI instruction where the index indicates the function to be executed. After the function is performed, the user program will continue with the instruction following the index byte. In essence, a whole new set of instructions have been created for the user which are two bytes long.

To make the entry easier, a macro call can be provided which will assemble the correct index byte when the function name is used. A set of EQU assembler commands associates the name and the index byte value.

$(RS)^3$ IN PROTO – SUBROUTINE DESCRIPTIONS

Each of the subroutines in the ROM are described here, giving the index for the call, a mnemonic subroutine name, a descriptive title, and the number of bytes in the stack used by the call (including the SWI). A brief description of the subroutine operation is also given, with the entry requirements, the exit conditions, and the registers altered by the subroutine. Only those registers indicated are altered by any $(RS)^3$ subroutine.

Index	Name	Title	Stack Bytes
00	PUSH ALL	Push All Registers	14

Five bytes are pushed onto the stack, containing, respectively, the Condition Codes, the B and A accumulators, and the Index Register. No registers are altered (except the stack pointer, which is decremented by 5).

Entry: Any

Exit: Stack: SP +1 +2 +3 +4 +5 (=old SP)
CC, B, A, XHXL

Registers Altered: SP

01	POPALL	Pop (=Pull) All Registers	9

Five bytes are pulled from the stack into the Condition Codes, the B and A accumulators, and the Index register, respectively. The Stack Pointer is incremented by 5.

Entry: Stack, as by PUSH ALL

Exit: CC, B, A, X pulled from stack

Registers Altered: CC, B, A, X, SP

02	TXAB	Transfer Index Register to A and B	9

The most significant eight bits of the index register are copied to the A accumulator, and the least significant eight bits are copied to the B accumulator.

Entry: Any

Exit: A, B loaded from X

Registers Altered: A, B

Index	Name	Title	Stack Bytes
03	TABX	Transfer A and B to Index	9

Accumulator A is copied to the most significant byte position of the index register, and accumulator B is copied to the least significant byte position of the index register.

Entry: Any

Exit: X loaded from A, B

Registers Altered: X

04	XABX	Exchange A and B with Index	12

The contents of the Index register and the two accumulators are exchanged, A with the most significant byte of X, B with the least significant byte.

Entry: Any

Exit: A, B and X exchanged

Registers Altered: A, B, X

05	PUSHX	Push Index Register	11

The contents of the index register is pushed onto the stack. The Stack Pointer is decremented by two.

Entry: Any

Exit: Stack: SP +1 +2 (=old SP)
XH XL

Registers Altered: SP

06	PULLX	Pop (=Pull) Index Register from Stack	9

Two bytes are pulled from the stack into the index register, and the stack pointer is incremented by two.

Entry: Two bytes on stack

Exit: X pulled from stack

Registers Altered: X, SP

Index	Name	Title	Stack Bytes
07	ADDXAB	Add Index to A and B	14

Add the contents of the Index Register to the two accumulators, as a 16-bit sum, leaving the result in the two accumulators. The most significant byte is assumed to be in accumulator A. The condition codes are set according to the result.

Entry: Addend in X, augend in A, B

Exit: Sum in A, B

Condition Codes:
- H = carry from bit 11 to bit 12 of sum
- N = bit 15 of sum
- Z = 1 if sum is zero; else = 0
- V = 1 if two's complement overflow
- C = carry out of bit 15 of sum

Registers Altered: A, B, CC

Index	Name	Title	Stack Bytes
08	ADDABX	Add A and B to Index Register	9

Add the contents of the two accumulators to the Index register, leaving the 16-bit sum in the index register. Accumulator A is assumed to be more significant than accumulator B. The condition codes are set according to the result.

Entry: Addend in A, B; augend in X

Exit: Sum in X

Condition Codes:
- H = carry from bit 11 to bit 12 of sum
- N = bit 15 of sum
- Z = 1 if sum is zero, =0 otherwise
- V = 1 if two's complement overflow
- C = carry out of bit 15 of sum

Registers Altered X, CC

Index	Name	Title	Stack Bytes
09	ADDAX	Add A to Index Register	9

Add the A accumulator to the contents of the Index register, and return the sum to the index register. The Condition Codes are set according to the result.

Entry: Addend in A, augend in X

Exit: Sum in X

Condition Codes: (Same as ADDABX)

Registers Altered: X, CC

Index	Name	Title	Stack Bytes
0A	ADDBX	Add B to Index Register	9

Add the contents of the B accumulator to the Index register, and leave the sum in the Index register. The Condition Codes are set according to the result.

Entry: Addend in B, augend in X

Exit: Sum in X

Condition Codes: (Same as ADDABX)

Registers Altered: X, CC

Index	Name	Title	Stack Bytes
0B	SUBXAB	Subtract Index from A, B	14

Subtract the contents of the index register from accumulators A and B as a 16-bit difference. The Condition Codes are set according to the result.

Entry: Subtrahend in X, minuend in A, B

Exit: Difference in A, B

Condition Codes:
- H = undefined
- N = bit 15 of difference
- Z = 1 if result is zero, =0 otherwise
- V = 1 if two's complement overflow
- C = borrow into bit 15 of difference

Registers Altered: A, B, CC

Index	Name	Title	Stack Bytes
0C	SUBABX	Subtract A and B from Index Register	9

Subtract the contents of the A and B accumulators from the Index register, leaving the difference in the Index. The Condition Codes are set according to the result.

Entry: Subtrahend in A, B; minuend in X

Exit: Difference in X

Condition Codes: (Same as SUBXAB)

Registers Altered: X, CC

Index	Name	Title	Stack Bytes
0D	SUBAX	Subtract A from Index Register	9

Subtract the contents of the A accumulator from the contents of the Index register and return the difference to the index register. The Condition Codes are set according to the result.

Entry: Subtrahend in A, minuend in X

Exit: Difference in X

Condition Codes: (Same as SUBXAB)

Registers Altered: X, CC

Index	Name	Title	Stack Bytes
0E	SUBBX	Subtract B from Index Register	9

Subtract the contents of the B accumulator from the Index register, leaving the difference in the index register. The Condition Codes are set according to the result.

Entry: Subtrahend in B, minuend in X

Exit: Difference in X

Condition Codes: (Same as SUBXAB)

Registers Altered: X, CC

Index	Name	Title	Stack Bytes
0F	P2HEX	Print Byte in Hex	15

The byte pointed to by the address in the Index register is converted to hexadecimal notation in ASCII, and output to the ACIA located as follows: memory locations BFF5-BFF6 contain an address of a pair of bytes (indirect pointer) which in turn contain the address of the ACIA status register.

BFF6	iL
BFF5	iH
...	
i+1	aL
i	aH
...	
a+1	ACIA Data
a	ACIA Status

Each byte of the output is stored into the ACIA data register after bit 1 of the Status register is true. The Control register of the ACIA is not altered, and the Data register is not read by this routine. The Index register is incremented past the byte which is output.

Entry: Memory byte at (X); ACIA at (BFF5)

Exit: (two ASCII bytes output)

Registers Altered: X

Index	Name	Title	Stack Bytes
10	P4HEX	Print Address in Hex	15

The two bytes in memory pointed to by the Index register are converted to four ASCII digits and output to the ACIA located at the address pointed to by the pointer pointed to by the byte pair at BFF5-BFF6 (see P2HEX). The Index register is incremented by two.

Entry: Two bytes at (X); ACIA at ((BFF5))

Exit: (four ASCII bytes output)

Registers Altered: X

Index	Name	Title	Stack Bytes
11	PRINTA	Print the Byte in A	10

The byte in accumulator A is output to the ACIA, the address of whose address is in locations BFF5-BFF6. No registers are altered except the ACIA data register.

Entry: Character in A

Exit: (one byte output)

Registers Altered: None

Index	Name	Title	Stack Bytes
12	PMSG	Print Message String	12

A message string, the first byte of which is pointed to by the Index register, is output to the ACIA, the address of whose address is in locations BFF5 BFF6. The string is terminated by an ASCII EXT (=hex 04), and the Index register is left pointing to that byte on return.

Entry: Character string to (X) terminated by 04; ACIA at ((BFF5))

Exit: (in ASCII bytes output), X pointing to 04 byte

Registers Altered: X

Index	Name	Title	Stack Bytes
13	VALAN	Validate AlphaNumeric	11

The character pointed to by the Index register is analyzed, and the Carry flag is set if it is a letter or digit; if it is not a hexadecimal digit, the Overflow flag is set. Other than the condition codes, no registers are altered.

Entry: Memory byte (ASCII) at (X)

Exit: Condition Codes:
- H = undefined
- N = undefined
- Z = 0
- V = 0 if character in range 0—9, A—F; else = 1
- C = 1 if character in range 0—9, A—Z; else = 0

Registers Altered: CC

Index	Name	Title	Stack Bytes
14	INPUTA	Input ACIA byte to A	9

One byte is input from the ACIA, the address of whose address is at location BFF5-BFF6, and this byte is returned to accumulator A. The ACIA is not written to, and except for the A accumulator, no registers are changed. (RS)[3] samples bit 0 of the status register of the ACIA, and when it goes to one, reads the data register. The input byte has bit 7 removed (set to zero).

Entry: (one byte input)

Exit: Character in A, bit 7=0

Registers Altered: A

Index	Name	Title	Stack Bytes
15	CONHB	Convert Hex String to Binary	11

A string of characters in memory beginning at the address in the index register is scanned for valid Hexadecimal digits; when one is found, it and all immediately following hex digits are converted to a binary number, which is left in the A and B accumulators (A is more significant). When this routine is called, the maximum length of the string is in the B accumulator. On exit, the Carry flag is set to one if the conversion resulted in a valid binary number, and the index register is left pointing to the next character in the string, or if the string is exhausted before finding any hex digits, to the last character of the string.

Entry: Character string (including ASCII hex number) at (X)
Max string length in B (<128)

Exit: Binary number in A, B

Condition Codes:
- H = undefined
- N = undefined
- Z = undefined
- V = undefined
- C = 1 if valid number; = 0 if not

Registers Altered: A, B, X, CC

Index	Name	Title	Stack Bytes
16	INDEX	Multiply A X B and Add to Index	12

The contents of the A accumulator is multiplied by the contents of the B accumulator, and the product is added to the Index register. The Condition Codes are set according to the result.

Entry: Multiplicand in A, Multiplier in B, augend in X

Exit: Sum in X

Condition Codes: (Same as ADDABX)

Index	Name	Title	Stack Bytes
17	MUL8	Multiply A Times B	12

Multiply the contents of the A accumulator times the contents of the B accumulator, and leave the product in both accumulators as a 16-bit number, with the most significant part in A. This is an unsigned multiply, and if either or both of the factors is negative (two's complement signed) the product will not be a true signed product of the signed factors, as may be seen in this formula:

$$(-n) \times (m) = (256 - n) \times m = 256m + (-nm)$$

The condition codes are nonetheless set according to the result.

Entry: Multiplicand in A, multiplier in B

Exit: Product in A, B

Condition Codes:
- H = undefined
- N = bit 15 of product
- V = 0
- Z = 1 if product is zero; otherwise = D
- C = 0

Registers Altered: A, B, CC

Appendix O

Data from the Optical Shaft Encoder and Ultrasonic Sonar subsystems are gathered every 0.1 second via the Extended Interrupt Handler (see Appendix B) and stored into a temporary line buffer in the Navigation Computer's memory as follows:

/time/fw/lw1/lw2/rw1/rw2/A#____/B#____/C#____/D#____/<CR><LF>

Where time = tenth's of seconds count - 2 bytes

fw = front wheel direction - 1 byte

lw1 = left wheel reverse counts - 2 bytes

lw2 = left wheel forward counts - 2 bytes

rw1 = right wheel reverse counts - 2 bytes

rw2 = right wheel forward counts - 2 bytes

A, B, C, or D refer to Sonar transducer selected and range of closest object except where an astrisk (*) indicates no transducer selected.

All numbers are hexadecimal except the sonar ranges which are decimal feet.

Test Data for Robot Integrated Operation Test # 20

```
/0001/49/0000/0000/0000/0001/A2 7.2/B*15.1/C0 2.5/D1 9.4/
/0002/49/0000/0000/0000/0001/A019.3/B1 4.7/C2 3.9/D*10.7/
/0003/49/0000/0000/0000/0001/A111.2/B2 2.9/C*11.3/D0 7.1/
/0004/49/0000/0000/0000/0001/A2 7.4/B*13.7/C0 2.4/D1 8.4/
/0005/49/0000/0000/0000/0001/A*12.6/B0 6.1/C1 3.0/D2 9.9/
```

```
/0006/49/0000/0000/0000/0001/A411.6/B5 3.5/C6 6.9/D*10.2/
/0007/49/0000/0000/0000/0001/A5 8.2/B6 2.6/C*11.9/D4 7.3/
/0008/49/0000/0000/0000/0001/A6 6.2/B*14.7/C4 2.7/D5 9.0/
/0009/49/0000/0000/0000/0001/A*17.8/B4 6.4/C5 3.5/D610.0/
/000A/49/0000/0000/0000/0001/A014.2/B1 4.9/C2 3.8/D*10.1/
/000B/49/0000/0000/0000/0001/A111.2/B2 2.9/C*11.3/D0 7.0/
/000C/47/0000/0000/0000/0001/A2 7.2/B*14.9/C0 2.5/D1 7.4/
/000D/47/0000/0000/0000/0001/A*12.9/B0 6.2/C1 3.0/D210.2/
/000E/48/0000/0000/0000/0001/A411.7/B5 3.4/C6 7.0/D* 9.9/
/000F/48/0000/0000/0000/0001/A5 8.1/B6 2.7/C*14.3/D4 7.3/
/0010/48/0000/0000/0000/0001/A6 6.3/B*13.1/C4 2.8/D5 9.1/
/0011/48/0000/0000/0000/0001/A*17.5/B4 6.4/C5 3.4/D611.2/
/0012/48/0000/0000/0000/0002/A013.1/B1 4.8/C2 3.8/D*10.1/
/0013/48/0000/0000/0000/0002/A111.2/B2 3.0/C*11.3/D0 7.1/
/0014/48/0000/0001/0000/0002/A2 7.3/B*14.8/C0 2.5/D1 7.3/
/0015/48/0000/0001/0000/0003/A*14.8/B0 6.1/C1 3.1/D2 8.5/
/0016/48/0000/0002/0000/0003/A411.6/B5 3.6/C6 7.3/D* 8.2/
/0017/48/0000/0003/0000/0004/A5 8.2/B6 2.9/C*14.7/D4 7.2/
/0018/47/0000/0004/0000/0005/A6 6.4/B*12.2/C4 2.9/D5 9.1/
/0019/47/0000/0005/0000/0006/A*17.4/B4 6.4/C5 3.8/D610.4/
/001A/47/0000/0006/0000/0008/A013.4/B1 5.7/C2 5.3/D*10.2/
/001B/47/0000/0007/0000/0009/A110.7/B2 3.4/C*11.4/D0 7.0/
/001C/47/0000/0009/0000/000A/A2 7.3/B*13.0/C0 3.2/D1 7.4/
/001D/47/0000/000A/0001/000B/A*15.5/B0 6.2/C1 3.6/D2 8.5/
/001E/47/0000/000B/0001/000D/A414.5/B5 4.6/C6 6.8/D*10.0/
/001F/47/0000/000D/0001/000E/A5 8.8/B6 3.7/C*14.1/D4 7.3/
/0020/47/0000/000E/0001/000F/A6 6.3/B*11.5/C4 3.6/D510.2/
/0021/46/0000/000F/0001/0011/A*14.7/B4 6.5/C5 4.8/D611.2/
/0022/46/0000/0011/0001/0012/A012.8/B1 6.8/C2 6.6/D*10.1/
/0023/46/0000/0012/0001/0013/A110.1/B2 4.4/C*10.1/D0 7.1/
/0024/46/0000/0013/0001/0015/A2 7.1/B*12.9/C0 4.0/D1 7.3/
/0025/46/0000/0015/0001/0016/A*12.8/B0 6.2/C1 4.7/D2 8.1/
/0026/46/0000/0016/0001/0017/A414.7/B5 5.7/C6 7.1/D* 9.9/
/0027/46/0000/0017/0001/0019/A5 9.6/B6 4.6/C*14.5/D4 7.3/
/0028/46/0000/0018/0001/001A/A6 6.4/B*14.6/C4 4.7/D510.1/
/0029/46/0000/001A/0001/001B/A*17.6/B4 6.3/C5 6.3/D610.7/
/002A/45/0000/001B/0002/001C/A011.1/B1 6.9/C2 7.1/D* 9.0/
/002B/45/0000/001C/0002/001E/A112.9/B2 5.4/C*11.6/D0 7.1/
/002C/45/0000/001E/0002/001F/A2 6.8/B*14.0/C0 5.0/D1 7.5/
/002D/45/0000/001F/0002/0020/A*17.1/B0 6.2/C1 5.5/D210.0/
/002E/45/0000/0020/0002/0022/A417.5/B5 6.8/C6 7.0/D* 9.9/
/002F/44/0000/0022/0002/0023/A5 8.9/B6 5.5/C*14.4/D4 7.4/
/0030/44/0000/0023/0002/0024/A6 6.4/B*14.5/C4 5.5/D5 9.5/
/0031/44/0000/0024/0002/0025/A*15.1/B4 6.5/C5 7.2/D611.4/
/0032/44/0000/0025/0002/0027/A014.9/B1 7.1/C2 6.6/D*10.0/
/0033/44/0000/0027/0002/0028/A111.8/B2 6.2/C*11.8/D0 7.1/
/0034/44/0000/0028/0003/0029/A2 6.8/B*13.0/C0 5.8/D1 7.5/
/0035/44/0000/0029/0003/002B/A*12.8/B0 6.2/C1 6.3/D210.2/
/0036/43/0000/002A/0003/002C/A416.6/B5 7.9/C6 7.0/D* 9.8/
/0037/43/0000/002C/0003/002D/A5 8.3/B6 6.3/C*14.0/D4 7.3/
/0038/43/0000/002D/0003/002E/A6 6.4/B*12.3/C4 6.6/D5 9.1/
/0039/43/0000/002E/0003/0030/A*18.0/B4 6.6/C5 6.6/D6 9.8/
```

```
/003A/43/0000/0030/0003/0031/A010.3/B1 6.8/C2 6.9/D*10.3/
/003B/43/0000/0031/0003/0032/A111.5/B2 7.1/C*11.7/D0 7.1/
/003C/43/0000/0032/0003/0033/A216.9/B*13.0/C0 6.5/D1 8.8/
/003D/43/0000/0033/0003/0035/A*17.4/B0 6.3/C1 6.7/D2 8.5/
/003E/42/0000/0035/0004/0036/A4 9.6/B5 8.5/C6 7.3/D* 9.7/
/003F/42/0000/0036/0004/0037/A5 7.9/B6 7.2/C*14.3/D4 7.3/
/0040/42/0000/0037/0004/0038/A6 6.4/B*11.8/C4 7.0/D5 9.0/
/0041/42/0000/0038/0004/003A/A*17.9/B4 6.5/C5 7.9/D610.3/
/0042/42/0000/003A/0004/003B/A014.6/B1 7.2/C2 6.6/D*10.2/
/0043/42/0000/003B/0004/003C/A110.8/B2 7.9/C*13.3/D0 7.1/
/0044/42/0000/003C/0004/003E/A2 7.2/B*14.6/C0 6.6/D1 8.2/
/0045/41/0000/003D/0004/003F/A*18.0/B0 6.1/C1 6.7/D210.2/
/0046/41/0000/003F/0004/0040/A410.4/B5 9.6/C6 7.3/D*10.1/
/0047/41/0000/0040/0004/0041/A510.4/B6 8.0/C*14.8/D4 7.4/
/0048/41/0000/0041/0004/0043/A6 6.3/B*14.6/C4 8.1/D510.4/
/0049/41/0000/0042/0005/0044/A*17.6/B4 6.5/C5 6.9/D612.5/
/004A/41/0000/0044/0005/0045/A014.2/B1 7.3/C2 7.5/D*10.3/
/004B/41/0000/0045/0005/0046/A111.3/B2 8.7/C*11.3/D0 7.1/
/004C/41/0000/0046/0005/0048/A2 7.0/B*14.4/C0 6.7/D1 7.8/
/004D/40/0000/0047/0005/0049/A*17.4/B0 6.2/C1 6.7/D2 8.4/
/004E/40/0000/0049/0005/004A/A414.0/B5 8.1/C6 7.3/D*10.1/
/004F/40/0000/004A/0005/004B/A5 8.7/B6 8.7/C*14.5/D4 7.5/
/0050/40/0000/004B/0005/004D/A6 6.3/B* 9.9/C4 8.1/D5 9.8/
/0051/40/0000/004C/0005/004E/A*16.7/B4 6.3/C5 8.2/D611.5/
/0052/40/0000/004E/0005/004F/A0 9.8/B1 7.3/C2 7.3/D* 9.9/
/0053/40/0000/004F/0006/0051/A111.4/B2 8.8/C*12.6/D0 7.1/
/0054/40/0000/0050/0006/0052/A2 6.7/B*14.4/C0 6.8/D1 8.0/
/0055/40/0000/0052/0006/0053/A*17.4/B0 6.2/C1 6.6/D210.2/
/0056/40/0000/0053/0006/0054/A413.3/B5 8.5/C6 7.2/D*10.6/
/0057/3F/0000/0054/0006/0056/A5 9.0/B6 9.7/C*14.9/D4 7.4/
/0058/3F/0000/0055/0006/0057/A6 6.4/B*14.2/C4 8.1/D5 9.3/
/0059/3F/0000/0057/0006/0058/A*17.3/B4 6.5/C5 6.8/D611.9/
/005A/3F/0000/0058/0007/0059/A012.5/B1 9.9/C2 7.1/D*10.0/
/005B/3E/0000/0059/0007/005B/A111.4/B2 8.6/C*11.4/D0 7.3/
/005C/3E/0000/005A/0007/005C/A2 7.2/B*14.6/C0 6.7/D1 9.0/
/005D/3E/0000/005C/0007/005D/A*17.9/B0 6.2/C1 6.7/D2 9.7/
/005E/3D/0000/005D/0007/005E/A412.3/B5 9.1/C6 7.3/D* 9.8/
/005F/3D/0000/005E/0007/0060/A5 8.5/B6 8.4/C*13.5/D4 7.3/
/0060/3D/0000/005F/0007/0061/A6 6.1/B*14.6/C4 8.2/D5 9.5/
/0061/3D/0000/0061/0007/0062/A*17.9/B4 6.5/C5 6.6/D611.7/
/0062/3C/0000/0062/0007/0063/A011.6/B1 6.8/C2 6.8/D*10.4/
/0063/3C/0000/0063/0008/0065/A111.3/B2 9.7/C*13.3/D0 7.1/
/0064/3C/0000/0064/0008/0066/A2 7.2/B*14.7/C0 6.7/D1 8.6/
/0065/3C/0000/0066/0008/0067/A*12.8/B0 6.2/C1 6.9/D210.2/
/0066/3C/0000/0067/0008/0069/A411.7/B5 9.6/C6 7.5/D* 9.8/
/0067/3C/0000/0068/0008/006A/A5 7.9/B611.3/C*14.4/D4 7.4/
/0068/3C/0000/006A/0008/006B/A6 6.3/B*12.3/C4 8.2/D5 8.1/
/0069/3C/0000/006B/0008/006C/A*18.4/B4 6.5/C5 8.1/D611.2/
/006A/3C/0000/006C/0008/006E/A010.7/B1 7.1/C2 7.2/D*10.7/
/006B/3C/0000/006D/0008/006F/A110.6/B2 9.8/C*13.1/D0 7.1/
/006C/3C/0000/006F/0009/0070/A2 7.2/B*14.4/C0 6.7/D1 8.2/
/006D/3B/0000/0070/0009/0071/A*14.5/B0 5.8/C1 6.8/D210.9/
```

```
/006E/3B/0000/0071/0009/0073/A410.7/B510.7/C6 7.7/D*10.7/
/006F/3B/0000/0072/0009/0074/A512.4/B612.1/C*14.6/D4 7.4/
/0070/3B/0000/0074/0009/0075/A6 6.4/B*11.0/C4 8.1/D510.9/
/0071/3B/0000/0075/0009/0076/A*18.2/B4 6.6/C5 8.2/D610.3/
/0072/3B/0000/0076/0009/0078/A010.0/B1 7.5/C2 8.1/D*10.9/
/0073/3B/0000/0077/0009/0079/A110.0/B2 9.7/C*14.0/D0 7.2/
/0074/3B/0000/0079/0009/007A/A2 7.1/B*13.2/C0 6.7/D1 7.9/
/0075/3B/0000/007A/0009/007B/A*17.5/B0 6.1/C1 7.2/D210.2/
/0076/3A/0000/007B/0009/007D/A410.1/B5 8.0/C6 7.4/D*10.1/
/0077/3A/0000/007C/000A/007E/A5 9.7/B6 9.7/C*14.2/D4 7.5/
/0078/3A/0000/007E/000A/007F/A6 6.3/B*14.5/C4 8.3/D510.5/
/0079/3A/0000/007F/000A/0080/A*18.0/B4 6.2/C5 8.1/D6 9.6/
/007A/3A/0000/0080/000A/0082/A0 9.1/B1 7.3/C2 7.8/D* 9.3/
/007B/3A/0000/0081/000A/0083/A1 9.8/B2 9.7/C* 9.9/D0 7.3/
/007C/3A/0000/0082/000A/0084/A2 6.7/B*15.2/C0 6.7/D1 8.1/
/007D/3A/0000/0084/000A/0085/A*17.1/B0 6.1/C1 7.2/D210.3/
/007E/3A/0000/0085/000A/0086/A4 9.3/B5 8.4/C6 7.3/D*11.3/
/007F/3A/0000/0086/000A/0088/A5 8.7/B611.2/C*14.9/D4 7.5/
/0080/3A/0000/0087/000A/0089/A6 6.4/B*12.2/C4 8.2/D5 9.9/
/0081/3A/0000/0089/000B/008A/A*18.8/B4 6.2/C5 8.2/D6 8.7/
/0082/3A/0000/008A/000B/008B/A0 8.3/B1 9.1/C2 7.9/D* 9.8/
/0083/39/0000/008B/000B/008D/A110.1/B210.0/C*10.1/D0 7.4/
/0084/39/0000/008C/000B/008E/A2 6.9/B*14.7/C0 6.7/D1 9.1/
/0085/39/0000/008E/000B/008F/A*17.3/B0 6.1/C1 6.8/D2 8.5/
/0086/39/0000/008F/000B/0090/A4 8.6/B5 9.0/C6 7.3/D*10.5/
/0087/39/0000/0090/000B/0092/A5 8.4/B6 8.4/C*14.4/D4 7.6/
/0088/39/0000/0091/000B/0093/A6 6.2/B*15.4/C4 8.2/D5 9.5/
/0089/39/0000/0093/000B/0094/A*15.7/B4 6.5/C5 8.3/D6 8.0/
/008A/38/0000/0094/000C/0095/A0 7.5/B1 6.6/C2 7.7/D*11.3/
/008B/38/0000/0095/000C/0096/A1 8.5/B2 9.8/C*14.6/D0 7.4/
/008C/38/0000/0096/000C/0098/A2 7.2/B*15.0/C0 7.2/D1 9.2/
/008D/37/0000/0097/000C/0099/A*20.6/B0 6.1/C1 7.9/D2 8.4/
/008E/37/0000/0099/000C/009A/A4 7.8/B5 9.4/C6 7.5/D*11.3/
/008F/37/0000/009A/000C/009B/A5 7.8/B610.1/C*15.3/D4 7.7/
/0090/37/0000/009B/000C/009C/A6 6.1/B*16.0/C4 8.1/D510.2/
/0091/37/0000/009C/000C/009E/A*20.5/B4 6.4/C5 8.1/D6 7.0/
/0092/37/0000/009D/000C/009F/A0 6.7/B1 6.9/C2 7.0/D*11.3/
/0093/37/0000/009E/000D/00A0/A1 7.5/B210.3/C*14.4/D0 7.4/
/0094/37/0000/00A0/000D/00A1/A2 7.1/B*14.6/C0 7.1/D1 8.7/
/0095/37/0000/00A1/000D/00A2/A*17.9/B0 6.1/C1 7.4/D210.0/
/0096/37/0000/00A2/000D/00A3/A4 6.7/B5 9.0/C6 7.5/D*10.9/
/0097/37/0000/00A3/000D/00A5/A5 7.6/B614.5/C*14.5/D4 7.7/
/0098/37/0000/00A4/000D/00A6/A6 6.5/B*14.7/C4 8.2/D5 9.7/
/0099/37/0000/00A5/000E/00A7/A*19.6/B4 6.4/C5 8.2/D6 6.4/
/009A/37/0000/00A7/000E/00A8/A0 5.9/B1 7.3/C2 8.3/D*10.8/
/009B/37/0000/00A8/000E/00A9/A1 6.7/B210.2/C*14.4/D0 7.4/
/009C/37/0000/00A9/000E/00AA/A2 7.1/B*14.4/C0 6.7/D1 8.4/
/009D/37/0000/00AA/000E/00AC/A*16.9/B0 6.0/C1 6.7/D2 6.2/
/009E/37/0000/00AB/000E/00AD/A410.6/B5 7.8/C6 7.5/D*10.7/
/009F/37/0000/00AD/000E/00AE/A5 6.7/B610.0/C*15.6/D4 7.7/
/00A0/37/0000/00AE/000E/00AF/A6 6.5/B*15.5/C4 8.2/D5 9.4/
/00A1/37/0000/00AF/000E/00B0/A*20.5/B4 6.3/C5 8.3/D6 5.5/
```

```
/00A2/36/0000/00B0/000F/00B2/A0 5.2/B1 7.2/C2 8.5/D*11.7/
/00A3/36/0000/00B1/000F/00B3/A1 6.0/B210.1/C*14.6/D0 7.4/
/00A4/36/0000/00B2/000F/00B4/A2 6.7/B*15.3/C0 7.3/D1 8.2/
/00A5/36/0000/00B4/000F/00B5/A*17.2/B0 6.1/C1 7.8/D2 5.4/
/00A6/36/0000/00B5/000F/00B6/A4 5.0/B5 8.1/C6 7.6/D*11.3/
/00A7/36/0000/00B6/000F/00B8/A5 7.7/B614.5/C*14.6/D4 7.7/
/00A8/36/0000/00B7/000F/00B9/A6 6.3/B*14.5/C4 8.1/D5 9.1/
/00A9/36/0000/00B9/000F/00BA/A*20.7/B4 6.2/C5 8.5/D6 4.9/
/00AA/36/0000/00BA/000F/00BB/A0 4.3/B1 7.4/C2 8.2/D*10.2/
/00AB/36/0000/00BB/0010/00BD/A1 5.3/B2 9.0/C*14.8/D0 7.4/
/00AC/36/0000/00BC/0010/00BE/A2 6.4/B* 8.2/C0 8.1/D1 8.1/
/00AD/35/0000/00BE/0010/00BF/A*16.8/B0 6.0/C1 6.7/D2 4.7/
/00AE/35/0000/00BF/0010/00C0/A4 4.2/B5 8.7/C6 7.7/D*10.3/
/00AF/35/0000/00C0/0010/00C2/A5 7.4/B615.0/C*15.0/D4 7.6/
/00B0/35/0000/00C1/0010/00C3/A6 6.2/B*12.1/C4 8.5/D5 8.9/
/00B1/35/0000/00C3/0010/00C4/A*20.8/B4 6.3/C5 8.1/D6 7.6/
/00B2/34/0000/00C4/0010/00C6/A0 3.5/B1 6.6/C2 8.1/D*10.1/
/00B3/34/0000/00C5/0010/00C7/A1 5.0/B210.7/C*14.7/D0 7.5/
/00B4/34/0000/00C7/0010/00C8/A2 6.8/B*13.4/C0 7.6/D1 8.2/
/00B5/34/0000/00C8/0010/00C9/A*16.9/B0 6.1/C1 8.6/D2 8.2/
/00B6/33/0000/00C9/0010/00CB/A4 3.5/B5 9.4/C6 7.7/D*12.3/
/00B7/33/0000/00CA/0010/00CC/A5 4.2/B614.9/C*15.0/D4 7.8/
/00B8/33/0000/00CC/0011/00CD/A6 5.9/B*13.2/C410.0/D5 3.8/
/00B9/32/0000/00CD/0011/00CE/A*20.6/B4 6.3/C5 8.5/D6 5.4/
/00BA/32/0000/00CE/0011/00CF/A0 2.7/B1 6.9/C2 8.2/D* 9.0/
/00BB/32/0000/00CF/0011/00D1/A110.4/B210.0/C*13.5/D0 7.5/
/00BC/32/0000/00D0/0011/00D2/A2 6.5/B*15.1/C0 7.6/D1 7.9/
/00BD/31/0000/00D1/0011/00D3/A*17.6/B0 5.9/C1 8.2/D2 8.6/
/00BE/31/0000/00D2/0011/00D4/A412.1/B5 9.9/C6 7.9/D*10.1/
/00BF/31/0000/00D3/0011/00D4/A5 3.7/B615.0/C*15.0/D4 7.8/
/00C0/31/0000/00D3/0011/00D5/A6 6.4/B*12.5/C4 8.2/D5 3.3/
/00C1/31/0000/00D3/0011/00D5/A*18.0/B4 6.3/C5 8.4/D6 4.0/
/00C2/31/0000/00D4/0011/00D5/A0 2.1/B1 7.1/C2 8.2/D*11.7/
/00C3/31/0000/00D4/0011/00D5/A1 9.2/B2 9.1/C*14.5/D0 7.5/
/00C4/31/0000/00D4/0011/00D5/A2 6.4/B*13.2/C0 8.1/D1 8.1/
/00C5/31/0000/00D4/0011/00D5/A*20.0/B0 5.8/C1 8.1/D2 8.5/
/00C6/31/0000/00D4/0011/00D5/A4 2.3/B510.2/C6 7.8/D*11.5/
/00C7/31/0000/00D4/0011/00D5/A5 3.7/B614.4/C*14.4/D4 7.7/
/00C8/31/0000/00D4/0011/00D5/A6 6.2/B*12.6/C4 8.7/D5 3.4/
/00C9/31/0000/00D4/0011/00D5/A*18.3/B4 6.3/C5 9.3/D6 3.9/
/00CA/31/0000/00D4/0011/00D5/A0 2.2/B1 7.1/C2 8.5/D*11.5/
/00CB/31/0000/00D4/0011/00D5/A1 9.1/B2 9.0/C*14.5/D0 7.5/
/00CC/31/0000/00D4/0011/00D5/A2 6.5/B*13.0/C0 7.5/D1 8.1/
/00CD/31/0000/00D4/0011/00D5/A*17.5/B0 5.8/C1 8.2/D2 8.5/
/00CE/31/0000/00D4/0011/00D5/A4 2.4/B510.1/C6 7.8/D*10.1/
/00CF/31/0000/00D4/0011/00D5/A5 3.7/B617.8/C*14.5/D4 7.8/
/00D0/31/0000/00D4/0011/00D5/A6 6.3/B*14.1/C414.2/D5 3.3/
/00D1/31/0000/00D4/0011/00D5/A*20.6/B4 6.3/C5 9.7/D6 3.9/
/00D2/31/0000/00D4/0011/00D5/A0 2.1/B1 7.1/C2 8.4/D*14.8/
/00D3/31/0000/00D4/0011/00D5/A1 9.2/B2 9.1/C*14.8/D0 7.5/
/00D4/31/0000/00D4/0011/00D5/A2 6.4/B*14.8/C010.4/D1 8.2/
/00D5/31/0000/00D4/0011/00D5/A*19.9/B0 5.8/C111.3/D2 8.6/
```

```
/00D6/31/0000/00D4/0011/00D5/A4 2.3/B510.2/C6 7.8/D*14.8/
/00D7/31/0000/00D4/0011/00D5/A5 3.7/B618.0/C*18.1/D4 7.7/
/00D8/31/0000/00D4/0011/00D5/A6 6.2/B*14.1/C414.1/D5 3.4/
/00D9/31/0000/00D4/0011/00D5/A*20.5/B4 6.3/C5 9.6/D6 3.9/
/00DA/31/0000/00D4/0011/00D5/A0 2.2/B1 7.1/C2 8.5/D*14.9/
/00DB/31/0000/00D4/0011/00D5/A1 9.1/B2 9.1/C*14.7/D0 7.5/
/00DC/31/0000/00D4/0011/00D5/A2 6.5/B*14.8/C0 8.2/D1 8.1/
/00DD/31/0000/00D4/0011/00D5/A*19.8/B0 5.8/C111.3/D2 8.6/
/00DE/31/0000/00D4/0011/00D5/A4 2.3/B510.1/C6 7.9/D*14.7/
/00DF/31/0000/00D4/0011/00D5/A5 3.7/B615.1/C*15.0/D4 7.8/
/00E0/31/0000/00D4/0011/00D5/A6 6.2/B*14.1/C414.0/D5 3.3/
/00E1/31/0000/00D4/0011/00D5/A*20.6/B4 6.3/C5 9.7/D6 3.9/
/00E2/31/0000/00D4/0011/00D5/A0 2.1/B1 7.1/C2 8.3/D*13.0/
/00E3/31/0000/00D4/0011/00D5/A1 9.2/B2 9.0/C*14.8/D0 7.6/
/00E4/31/0000/00D4/0011/00D5/A2 6.4/B*17.8/C0 8.1/D1 8.1/
```

UNCLASSIFIED

SECURITY CLASSIFICATION OF THIS PAGE

REPORT DOCUMENTATION PAGE

1a. REPORT SECURITY CLASSIFICATION UNCLASSIFIED	1b. RESTRICTIVE MARKINGS
2a. SECURITY CLASSIFICATION AUTHORITY	3. DISTRIBUTION/AVAILABILITY OF REPORT UNLIMITED
2b. DECLASSIFICATION/DOWNGRADING SCHEDULE	
4. PERFORMING ORGANIZATION REPORT NUMBER(S) AFIT/GE/ENG/84D-19	5. MONITORING ORGANIZATION REPORT NUMBER(S)
6a. NAME OF PERFORMING ORGANIZATION: School of Engineering 6b. OFFICE SYMBOL (If applicable): AFIT/ENG	7a. NAME OF MONITORING ORGANIZATION
6c. ADDRESS (City, State and ZIP Code) Air Force Institute of Technology Wright-Patterson AFB, Ohio 45433	7b. ADDRESS (City, State and ZIP Code)
8a. NAME OF FUNDING/SPONSORING ORGANIZATION 8b. OFFICE SYMBOL (If applicable)	9. PROCUREMENT INSTRUMENT IDENTIFICATION NUMBER
8c. ADDRESS (City, State and ZIP Code)	10. SOURCE OF FUNDING NOS. PROGRAM ELEMENT NO. / PROJECT NO. / TASK NO. / WORK UNIT NO.
11. TITLE (Include Security Classification) Creating a Mobile Autonomous Robot Research System (MARRS)	
12. PERSONAL AUTHOR(S) Thomas E. Clifford, 1st Lt, USAF Hubert G. Schneider III, Capt, USAF	
13a. TYPE OF REPORT: MS Thesis 13b. TIME COVERED: FROM ____ TO ____	14. DATE OF REPORT (Yr., Mo., Day): 1984 December 15. PAGE COUNT: 256
16. SUPPLEMENTARY NOTATION Approved for public release; IAW AFR 190-17. LYNN E. WOLAVER, Dean for Research and Professional Development, Air Force Institute of Technology (AFIT)	
17. COSATI CODES: FIELD / GROUP / SUB. GR.	18. SUBJECT TERMS (Continue on reverse if necessary and identify by block number) Autonomous Vehicle, Robot, Environmental Mapping, Basic, Sonar, Shaft Encoder, Ultrasonics, Navigation, Microprocessors, Computer Programs, Thesis

19. ABSTRACT (Continue on reverse if necessary and identify by block number)

The Mobile Autonomous Robot Research System (MARRS-1) was created as the first of a series of autonomous vehicle prototypes for the Air Force Institute of Technology. The major accomplishment in developing MARRS-1 is the integration of Optical Shaft Encoder (OSE) data with Ultrasonic Sonar range and direction information to produce accurate environmental maps that are relative to the robot. The OSE and Sonar subsystems make up the most important part of MARRS-1's Navigation Computer. With these two subsystems and minimal additional software, mapping and obstacle avoidance become a reality. The thesis includes schematics, parts list, and software listings for the MARRS-1 Navigation Computer. Additionally, the mapping and navigation algorithms are shown implemented in the BASIC language with numerous example graphics maps created by the integrated MARRS-1 robot. Issues involved in solving mobile robotics problems are discussed.

20. DISTRIBUTION/AVAILABILITY OF ABSTRACT UNCLASSIFIED/UNLIMITED ☒ SAME AS RPT. ☐ DTIC USERS ☐	21. ABSTRACT SECURITY CLASSIFICATION UNCLASSIFIED
22a. NAME OF RESPONSIBLE INDIVIDUAL Dr. Matthew Kabrisky	22b. TELEPHONE NUMBER (Include Area Code) 513-255-5276 22c. OFFICE SYMBOL AFIT/ENG

DD FORM 1473, 83 APR EDITION OF 1 JAN 73 IS OBSOLETE.

UNCLASSIFIED

SECURITY CLASSIFICATION OF THIS PAGE