AD-A149 304 SURFACE PHYSICS INSTRUMENTATION(U) STEVENS INST OF TECH 1/1
HOBOKEN NJ DEPT OF PHYSICS AND ENGINEERING PHYSICS
M SEIDL ET AL. 26 OCT 84 AFOSR-TR-84-1164 AFOSR-83-0316

UNCLASSIFIED F/G 20/6 NL

END
FILMED
DTIC

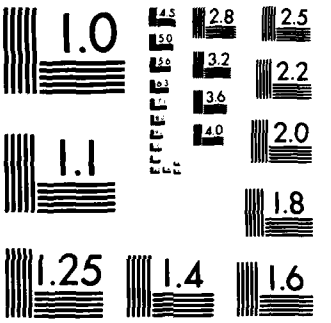

MICROCOPY RESOLUTION TEST CHART
NATIONAL BUREAU OF STANDARDS-1963-A

AD-A149 304

(12)

SECURITY CLASSIFICATION OF THIS PAGE (When Data Entered)

REPORT DOCUMENTATION PAGE

READ INSTRUCTIONS BEFORE COMPLETING FORM

1. REPORT NUMBER: AFOSR-TR- 84-1164

2. GOVT ACCESSION NO.

3. RECIPIENT'S CATALOG NUMBER

4. TITLE (and Subtitle): Surface Physics Instrumentation

5. TYPE OF REPORT & PERIOD COVERED: Final Scientific Report (Aug. 15, 1983 to Aug. 14, 1984)

6. PERFORMING ORG. REPORT NUMBER

7. AUTHOR(s): Milos Seidl, Gary Tompa, Wayne Carr

8. CONTRACT OR GRANT NUMBER(s): AFOSR-83-0316

9. PERFORMING ORGANIZATION NAME AND ADDRESS:
Department of Physics & Engineering Physics
Stevens Institute of Technology
Hoboken, N. J. 07030

10. PROGRAM ELEMENT, PROJECT, TASK AREA & WORK UNIT NUMBERS: 61102F 2301/A7

11. CONTROLLING OFFICE NAME AND ADDRESS:
Department of the Air Force
Air Force Office of Scientific Research
Bolling Air Force Base, DC 20332

12. REPORT DATE: October 26, 1984

13. NUMBER OF PAGES: 24

14. MONITORING AGENCY NAME & ADDRESS (if different from Controlling Office)

15. SECURITY CLASS. (of this report): Unclassified

15a. DECLASSIFICATION/DOWNGRADING SCHEDULE

16. DISTRIBUTION STATEMENT (of this Report)

Approved for public release;
distribution unlimited.

17. DISTRIBUTION STATEMENT (of the abstract entered in Block 20, if different from Report)

DTIC
ELECTE
JAN 0 2 1985
S D
E

18. SUPPLEMENTARY NOTES

19. KEY WORDS (Continue on reverse side if necessary and identify by block number)

(ultra high vacuum)

20. ABSTRACT (Continue on reverse side if necessary and identify by block number)

A surface physics instrumentation system was assembled using components purchased from the DOD Instrumentation Grant in addition to components already present in the laboratory. The system consists of the following parts: UHV vacuum system with sample insertion, Auger electron spectrometer, Ion scattering spectrometer, Secondary ion mass spectrometer and work function measuring system. The instrument is a basic tool for preparing and analyzing well defined surfaces in ~~ultra~~ UHV high vacuum environment.

DD FORM 1 JAN 73 1473 EDITION OF 1 NOV 65 IS OBSOLETE
S/N 0102-LF-014-6601

SECURITY CLASSIFICATION OF THIS PAGE (When Data Entered)

DTIC FILE COPY

CONTENTS

1.0 INTRODUCTION

2.0 DESCRIPTION OF EQUIPMENT

- 2.1 AVAILABLE COMPONENTS
- 2.2 ACQUIRED COMPONENTS
- 2.3 SYSTEM DESCRIPTION
- 2.4 COMPUTER HARDWARE
- 2.5 COMPUTER SOFTWARE

3.0 USE OF EQUIPMENT

4.0 FIGURES (7)

Accession For
NTIS GRA&I ☒
DTIC TAB ☐
Unannounced ☐
Justification

By
Distribution/
Availability Codes
Dist | Avail and/or Special
A-1

DTIC COPY INSPECTED 5

SECTION 1

INTRODUCTION

This report describes a surface physics instrumentation system consisting of the following parts:

a) Ultra-high vacuum system with sample insertion
b) Auger electron spectrometer AES
c) Ion scattering spectrometer ISS
d) Secondaty ion mass spectrometer SIMS
e) Work function measurement system

The apparatus was constructed at the Plasma and Surface Physics Laboratory of the Department of Physics and Engineering Physics in the period between August 15, 1983 and August 14, 1984. It was assembled using components already present in the laboratory in addition to components purchased from the DOD Instrumentation Grant AFOSR-83-0316. The equipment was acquired in accordance with the equipment list included in the grant agreement.

SECTION 2.1

AVAILABLE COMPONENTS

The surface physics experimental station developed with funds from Air Force grant AFOSR-83-0316 began with equipment acquired from previous grants and industrial donations. The next section details the use of the equipment. The major items present at the inception of the experimental station are listed below.

1. BASIC VACUUM COMPONENTS

Varian 2000 series stainless steel vacuum vessel
Oil diffusion pumping system (replaced in surface station)
Pressure monitoring gauges
Assorted vacuum flanging and fixtures

2. SAMPLE MANIPULATION

Huntington PM-600-XYZR precision manipulator
Sample carousel
Sample holder
Sample ribbon holder
Sample insertion system with pumping

3. SECONDARY ION MASS SPECTROSCOPY (SIMS) STATION

Kratos SIMS system consisting of:
- Kratos Minibeam II ion gun
- UTI-100C modified quadrupole mass spectrometer
- Reactive gas signal enhancement
- Associated drive and signal processing electronics

4. TEST EXPERIMENTAL STATION (updated in surface station)

Work function electron diode monitor
- Apex 4760 modified electron gun
- Support palette

Cesium deposition gun

5. SIGNAL PROCESSING

Apple II+ computer with I/O cards
Keithley 614 electrometer
Keithley 485 programmable digital picoammeter
Oscilloscopes

Programmable power supply controllers
Power supplies
Multimeters
X-Y recorders
Lock-in amplifier
Function generators

The original system consisted of a vacuum pumping station and chamber, an adjustable sample platform, a sample insertion system, a secondary ion mass spectroscopy station,and a test platform for monitoring the sample work function shifts and cesium deposition. The ultimate operating pressure was in the upper 10^{-9} torr range. Diffusion pump oil components were observable contaminants. High vacuum sections were exposed to polymer gasket seals and thus bakeout temperatures were limited. These and other considerations led to the revamping of the basic pumping system in order that a cleaner test environment would exist. At the same time the ability to acquire more detailed information about the physics of the surface was desired and new instrumentation was installed for this purpose. The revised system incorporates the old system, building on knowledge gained while testing the various components. In the following section the new items are tabulated and the present system is described.

SECTION 2.2
ACQUIRED COMPONENTS

The surface physics experimental station components purchased with the grant are tabulated below by manufacturer.

1. PERKIN-ELMER VACUUM PRODUCTS DIVISION $18,892.00
   - TNB-X300 vacuum D.T. ion pumping
   - digital ion pump power supply
   - titanium sublimators and power supply
   - alterations as per specifications
   - provide "Diversey" cleaning of existing chamber

2. BALZERS $7,049.37

2 DMP0191 TPU 040 turbomolecular pumps

2 PMC01220 TCP 040 power supply

2 PM006376X splinter shield

2 PM011232X 3M connector cable

2 PMZ 01017 TSF010 emergency vent valve

2 U0147323 relay set

2 PM0064014 water cooling kit

3. INTERACTIVE MICROWARE INC. $2,821.00

64K RAM card for Apple II+

Apple super serial card

Houston Instrument DMP-29 8-pen plotter

adaption software (Scientific plotter version II)

cable

4. EUROTHERM CORPORATION $1,311.35

812-4/20mA-R-0/1600C-120V-S-HH programmable controller

455-25-A-120V-120V-4/20mA-PA-CL thyristor

5. HUNTINGTON MECHANICAL LABORATORIES, INC. $5,050.00

247-18 welded bellows 19in. stroke

MV-150 metal seal valve

MV-250 metal seal valve

MS-154 metal seal straight through valve with rough port

VF-106-3C rotary feedthrough

VF-166 rotary feedthrough

6. THERMIONICS LABORATORY INC. $1,800.24

2102 thermocouple processor

ZPV-075 viewport

ZPV-150 viewport

SSH-182 flex hose

2 NG-1000 nude ion gauge

4 275150T 2 3/4 X1 1/2 tap flange

450X275 4 1/2 X 2 3/4

800000 blank flange

2 FL275150 double sided flange

7. PERKIN-ELMER PHYSICAL ELECTRONICS $117,665.46

PHI ESCA/AUGER electronics and optics system including:

PHI model 20-805 analyzer control

PHI model 20-075/06 electron mult, P.S.

PHI model 95 preamp

PHI model 1120 amp/disc.

PHI model 1109 data converter

PHI model 18-030/03 power interlock

PHI model 32-095 x-ray source control

PHI model 14-040 x-ray power supply

PHI model 11-010 electron gun control

2 electronic cabinets

PHI model 15-255GAR electron energy analyzer with angular revolving drum

PHI MODEL 6033, 5kV microbeam differential sputtering system, including:

PHI model 04-303 differential ion gun

PHI model 04-220 Ar gas admission

PHI model 11-065 differential ion gun cont.

cabling

PHI ISS system, including:

He^3 gas admission

NE^{20} gas admission

ESCA/AUGER/ISS mode control

plumbing for gas admission

cabling

8. VICO INCORPORATED $580.00

38 X 38 base with CE-4 Spring-Flex Mounting

9. HUNTINGTON MECHANICAL LABORATORIES $1740.66

2 HML model 275-150-D-1 standard conflat flange

HML model A00-793 nipple as per drawings

HML model VF-171M with 1.5 inch bellows installed

10. NOR-CAL PRODUCTS INC. $1,090.16

3 NCP model FH-075-24-2NW flexible hose

3 NCP model FTA-0753-NW flex trap (Zeolite trap)

3 NCP model NW-16CR centering ring

3 NCP model NW-16CP clamp

11. VELMEX, INC. $420.35

VI model A-4027-WF with metric scale and pointer

12. JEOL,USA, INC. $90.00

JEOL Auger handbook

13. PERKIN ELMER, INC. $297.50

PE ESCA handbook

PE Auger handbook

14. SHIPPING AND INSTALLATION $481.91

TOTAL $159,290.00

SECTION 2.3
SYSTEM DESCRIPTION

The entire system is depicted in figure 2.2a.

1.) Chamber

The experimental test chamber is a Varian 2000 series stainless steel bell. All ports are of the "conflat" type providing all metal seals. The main pumping is provided by a Perkin-Elmer TNBX-300 ion pumping system including titanium sublimaters and cryopanels. The ion pumps may be isolated from the chamber by a poppet valve. Chamber roughing is achieved by pumping with a Balzers TPU-040 turbo pump which is backed by a zeolite trapped Seargent-Welch 1402 forepump. This pump may also be isolated from the main chamber by a Huntington MV-250 all-metal sealed valve. The chamber pressure is monitored with a nude ionization guage controlled with a Perkin-Elmer DGC III ionization guage controler. This controller is capable of adjusting readings to correspond to the true pressure for a given gas in the chamber. Several observation windows are mounted on the chamber including one large main observation window. The chamber and all appendages are bakeable in excess of 200 degrees centigrade. Provision is made for admitting any gas into the chamber at any pressure, in particular for backfilling the chamber with nitrogen.

2.) Target and Sample Insertion System

In figure 2.2b two early versions of the sample holders are shown. These versions may still be used for rough work but have been found too course and bulky for precision data recording in the new system. An advanced sample holder has been designed and is being constructed presently. The upper sample holder depicted in figure 2.2b provides for sample isolation and biasing through a shielded cable. This sample holder is also capable of being inserted or withdrawn from the vacuum chamber without breaking vacuum integrity. Any vacuum

compatible material may thus be placed into the vacuum for examination the only real constraints being geometrical. The lower sample holder depicted in figure 2.2b is capable of heating the sample but is not easily removed from the vacuum chamber. Notice that both samples are mounted on a carousel which may be rotated to any any experiment workstation. This carousel is in turn mounted on a Huntington PM-600-XYZR precision manipulator so that the sample may be moved in any direction. Sample insertion is carried out by attaching the sample holder to a threaded rod in an airlock, threading is accomplished with a Huntington VF-166 rotary feedthrough. The airlock is then shut, pumped out, and opened to chamber vacuum. Next the rod is inserted into the chamber. Once the sample holder is docked to the carousel, the rod is unthreaded from the sample holder and removed from the high vacuum chamber.

The new sample holder incorporates features of both previous holders. Figure 2.2c depicts the updated sample holder. The sample is isolated and biasable through shielded cable. Two additional leads provide for heating and also monitoring currents not striking the sample but in the target zone. This new arrangement also takes advantage of the sputter cleaning capabilities of the Perkin-Elmer sputter ion gun model 04-303 which is capable of cleaning the sample surface. The sample is placed at a convenient angle for the analytic tools. The sample area is greatly reduced from previous designs, easing alignment.

The samples may be inserted into the sample chamber and transferred to the carousel, or they may be removed from the chamber without raising the chamber pressure above 10^{-7} torr. The general system is depicted in figure 2.2a. The sample is transferred via a long metal rod threaded at one end and attached to a rotary feedthrough at the other. The sample threads onto the rod and is pushed onto the carousel where spring clips hold it in place and push pin connectors make electrical contact. The rod is then unthreaded and withdrawn. The rotary feedthrough is mounted on a Vico unislide assembly and the rod is sheathed in a welded bellows. The docking port

consists of an alignment adapter nipple and a five-way cross through which the sample fits. The top of the cross has a window to check the sample in its vacuum environment. A Huntington MS-154 straight through all metal seal valve provides isolation to the chamber.. Pressure in the transfer port is monitored by a nude ionization guage and a Veeco 1000 controler. High vacuum pumping is provided by a Balzers TPU-040 turbopump backed by a zeolite trapped forepump.

3.) SIMS

The secondary ion mass spectroscopy instrument was purchased from KRATOS Inc. It consists of two main elements and their support electronics. These are the KRATOS Minibeam II ion gun and the quadrupole mass spectrometer. They are depicted in figure 2.2d. This portion of the system will be described in greater detail in the following three paragraphs.

The Minibeam II ion gun has a beam energy of [illegible] eV to 4 keV. The gun provides a current varying from 4nA to 300nA with beam diameter varying between 35 uM and 100 uM. The beam is capable of rastering a 2mm by 2mm area on the sample, position movable. The operating gas is typically argon but any noble gas is acceptable. The gun is differentially pumped with a Balzers TPU-040 turbopump to reduce chamber gas loads. The turbopump may be valved off from the gun and hence the chamber by a Huntington MV-150 all metal seal valve.

The quadrupole mass spectrometer is the UTI model UTI-100-C spectrometer modified by Kratos to produce energy filtering of incoming charged particles, block neutrals sputtered from the surface and examine negatively charged particles while still retaining the ability to work as a residual gas analyzer. The energy filter is a "Bessel box" type arrangement which also blocks on axis neutrals. The mass range is 1 to 300 AMU. The sweep time is variable from 75ms to 10min internally, or may be driven by an external ramp with a period greater than 75ms. Any portion of the full range may be examined including a single fixed peak. Resolution is 2M at 10% peak height

valleys. A channeltron electron multiplier is used for signal detection allowing both pulse counting and analog detection. A gain of 10^{+6} is standard.

The system may operate in the residual gas analysis "RGA" mode with or without sputtering and it may scan the positive or negative 0 to 300 mass range. The system is capable of rastering the the sample and gating the signal for more accurate sample profiles. In the raster mode of operation an image of the sample may be obtained. The image may be either an elemental image of the surface or a current to the sample surface image. In both imaging modes the area examined is dependent on the beam energy. Finally a reactive gas "O_2" may be directed onto the sample to enhance certain emissions.

4.) CMA

The cylindrical mirror analyzer "CMA" station is capable of functioning in several modes. In normal operation it is an energy analyzer of Auger electrons. In the retarding mode it may again examine Auger electrons or perform x-ray photoelectron spectroscopy "XPS or ESCA". By reversing polarity in the mirror positive ions may also be examined. In particular a scattered ion energy spectrogram may be recorded "ISS". The analyzer is a Perkin-Elmer 15-255GAR double pass angle resolved aperature limited cylindrical mirror. For Auger spectroscopy there is an electron gun coaxial with the cylinder. The view of a sample on this axis is depicted in figure 2.2e.

The Perkin-Elmer 04-303 differential ion gun shown in figure 2.2e may be used to provide ions for ion scattering spectroscopy. Helium-3, Neon-20 and Argon-40 are typically used for runs. This gun with its high current density is also used for sputter cleaning of targets. A future x-ray gun is also shown in the figure. While the electronics for this device have been obtained a source has not yet been designed that is compatible with the chamber geometry. This will be done in the future. Also seen in the figure is a hydrogen ion gun.

This is to be acquired in the near future and is depicted here since this is its likely placement position due to geometrical constraints.

5.) Experimental

The original setup consisted of a prototype cesium deposition station and an electron diode to monitor changes in the work function. Cesium was deposited at one point and the carousel rotated to the electron gun where the work function was monitored. Since the surface could not be sputter cleaned, (the SIMS gun does not supply enough current,) the station was designed around a vertical ribbon which could be heated to remove contaminants. There are several drawbacks to that arrangement. The cesium gun ion emitting surface directly faced the sample allowing neutrals evolved at the source to impinge on the surface, this was not unexpected but acceptable for start up evaluations. The present version eliminates this problem. The source of cesium is a zeolite pellet fitted in a "Pierce gun" extraction system. An "Einzel" or unipotential lens provides further focusing of the beam for extended travel. The beam is next deflected and finally aperatured before impinging onto the sample surface. This allows for precise monitoring of the amount of cesium arriving at the surface since neutrals are now not deposited. Impingment energy is variable.

The electron diode for measuring shifts in the work function is a modified Apex model 4760 electron gun. The standard lens system has been replaced by a simple drift tube. The electron source is a custom fitted tungsten filament. Originally a standard barium oxide cathode was used but this has two drawbacks. First, the cathode is poisoned on exposure to atmosphere once it has been activated, necessitating gun replacement whenever the chamber is opened. Second, the tungsten filament is more immune to adsorbate induced shifts in the cathode work function than is barium oxide.

SECTION 2.4
COMPUTER HARDWARE

The data acquisition and control is performed by computer. The Apple II+ with 48K of memory is used with the peripherals listed below:

Apple language card
Epson MX-100 printer with Pkaso interface card
Houston Instruments DMP-29 plotter with Apple super serial card
2 disk drives with interface card
Interactive Structures AI13 A/D input interface card
Interactive Structures DI09 digital I/O interface card
Moutain Hardware clock card
Hayes Micromodem card

The AI13 card allows analog voltages to be read by the computer. e.g., the electron multiplier signal from the CMA. There are 16 input channels; each may be programmed to one of eight sensitivities from 0.1 volt f.s. to 5.0 volts f.s.

The DI09 digital interface has been configured as the standard IEEE488 interface bus. Connected on this bus are three Kepco SN-488-122 power supply controllers, and a Keithly 485 picoammeter. The power supply controllers are used to control the CMA ramp, the SIMS ramp, the work function ramp, and additional power supplies. The picoammeter is used to measure low level currents, e.g., in the work function measurement.

The printer is used for program listings, document writing, and hard copy of data. The plotter is indispensable for plotting data. It has 8 pens, so that several runs may be compared on the same graph.

The clock card assists in timing data runs and incorporating the date in data, programs, plots, etc.

Since the Apple is usually busy controlling experiments, much of the software development is done on a different computer. The modem is useful for quickly transferring the software to the Apple. In addition, should the need arise, raw data may be transferred to a mainframe computer for processing.

SECTION 2.5
COMPUTER SOFTWARE

A substantial amount of software has been developed for the system. This has been developed in house, using a combination of BASIC and assembly language. The resident language in the Apple computer is BASIC, and this allows direct access to the peripheral cards in a simple way. Assembly language has been used to perform the IEEE488 interface functions, and in time critical situations. For example it requires several minutes to acquire an Auger electron spectrum (4096 data points) using a program written entirely in BASIC. By using an assembly language routine to take and plot the data, the acquisition time is reduced to the point where it is limited by the plotter speed, (approximately 20 seconds for a scan.)

Programming has been done for three experiments; the Auger spectrometer, the residual gas analyzer, and the work function measurements. The software development is an ongoing process, and new ideas for improved performance are continually being added.

The Auger spectrometer control program consists of three parts; the main program in BASIC, the ramp and plot routine in machine language, and the parameter data file on diskette. The operator enters

the starting and ending energies of the electron energy analyzer and the plotting parameters, and initiates the run. The computer controls the analyzer voltage and reads and plots the data. There are provisions for writing additional information on the plot, such as: date and device settings.

The residual gas analyzer control program is written entirely in BASIC. It generates the mass scan voltage and reads and plots the quadrupole current versus mass.

Relative work function is measured by recording current collected by the sample versus incident electron energy. The currents are in the nanoampere range, requiring thet the Keithley 485 picoammeter be used. The control program consists of a main program in BASIC and machine language routines to program and read the picoammeter, and set the sample voltage. The program otherwise performs the same functions as the aforementioned programs.

Figures 2.5a and 2.5b are illustrations of the plotter output. They show typical auger spectra of a molybdenum sample. The first one shows two overlapping scans of the sample before and after cleaning. The second figure shows the sample partially covered with cesium.

SECTION 3
USE OF EQUIPMENT

The primary use if the equipment is to investigate the surface production of negative hydrogen ions on solid surfaces. This research is done in the Plasma and Surface Physics Laboratory of the Department of Physics and Engineering Physics. Presently this research is supported by the following grants:

AFOSR-83-0230A Surface Production of Negative Hydrogen Ions

DE-AC02-84ER53167 Production of Negative Hydrogen Ions by Sputtering

NSF-PHY-8205886 Ion Production in Plasma-Surface Interactions

Additional support is requested from the State of New Jersey in the field of surface modification technology.

In all of these research programs The surface physics instrumentation provides the basic tool for preparing and analyzing clean and well-defined surfaces.

The instrument will be of assistance to other research on campus,including the following DOD grants:

US Army Grant DAAG 29-83-K-0121 Corrosion, Wear, and Mechanical Properties of Pulsed Electrodeposited Alloys

AFOSR 84-0228 Mega-Amp Opening Switch with Nested Electrodes

FIGURE LISTING

2.2a General system setup

2.2b Original sample holders

2.2c New sample holder

2.2d SIMS station

2.2e Auger station

2.5a Auger spectrum before/after cleaning molybdenum

2.5b Auger spectrum of cesium on molybdenum

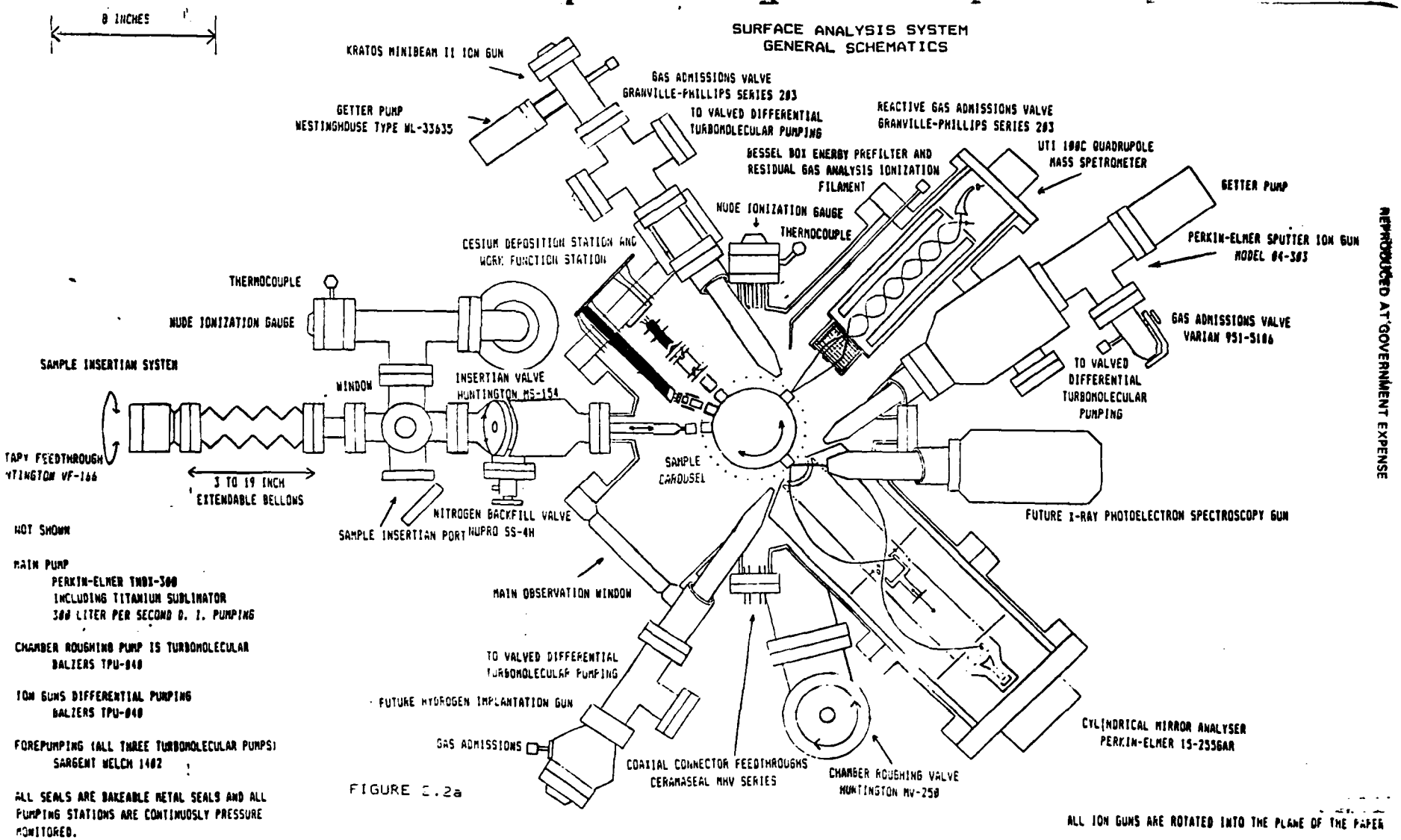

FIGURE C.2a

REPRODUCED AT GOVERNMENT EXPENSE

FUTURE SAMPLE HOLDERS WILL INCLUDE A SINGLE CRYSTAL MOUNTING STAGE, WITH FULL HEAT TREATMENT CAPABILITIES. ANOTHER SAMPLE HOLDER WILL MOUNT WITH ITS NORMAL AT THE CYLINDRICAL MIRROR ANALYZERS PRIMARY ACCEPTANCE ANGLE. A THIRD IS BEING DESIGNED WITH ITS NORMAL AT THE QUADRUPOLES PRIMARY ACCEPTANCE ANGLE.

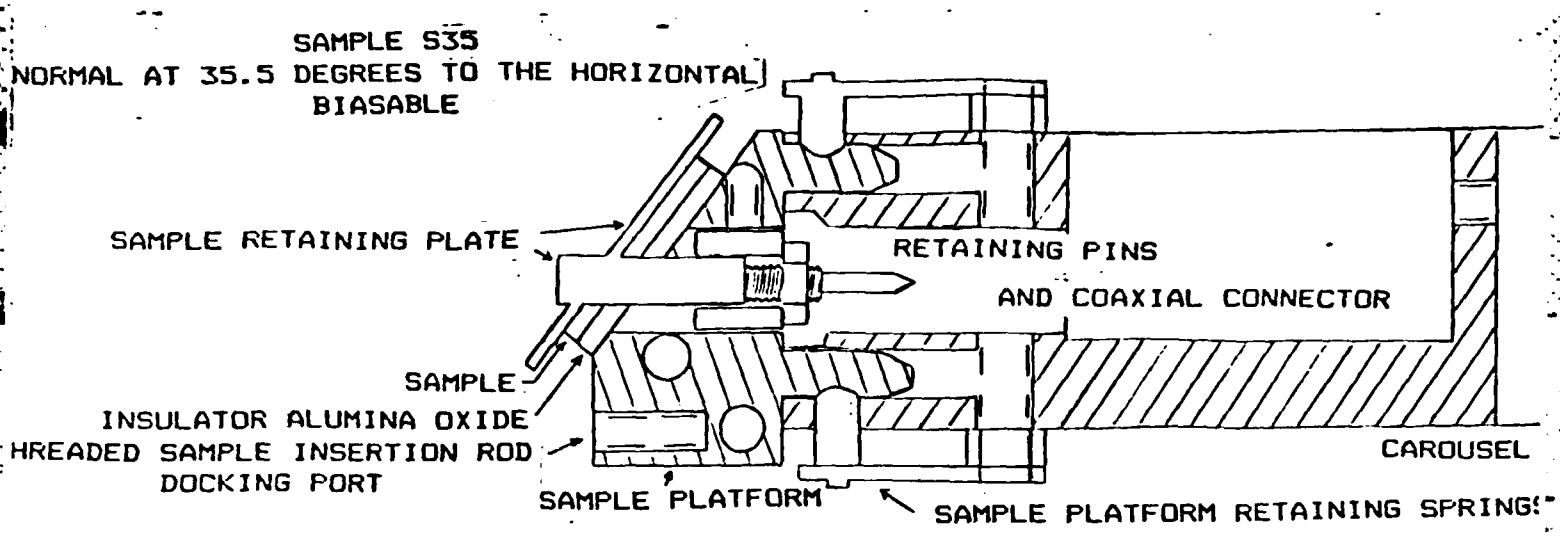

SAMPLE CENTER
THE FOCUS OF ALL ANALYTIC INSTRUMENTS

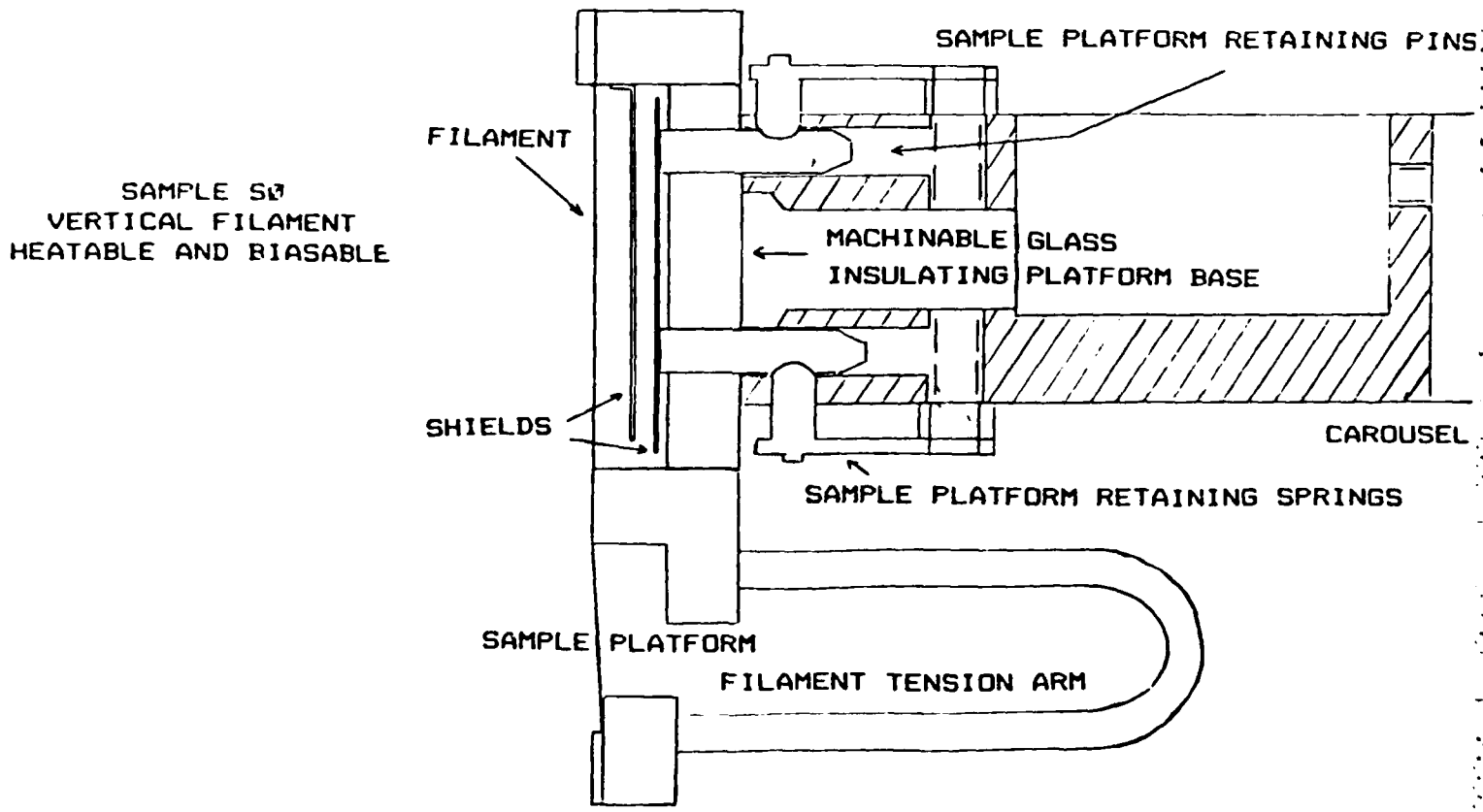

FIGURE 2.2b

COAXIAL CONNECTORS NOT SHOWN

1INCH

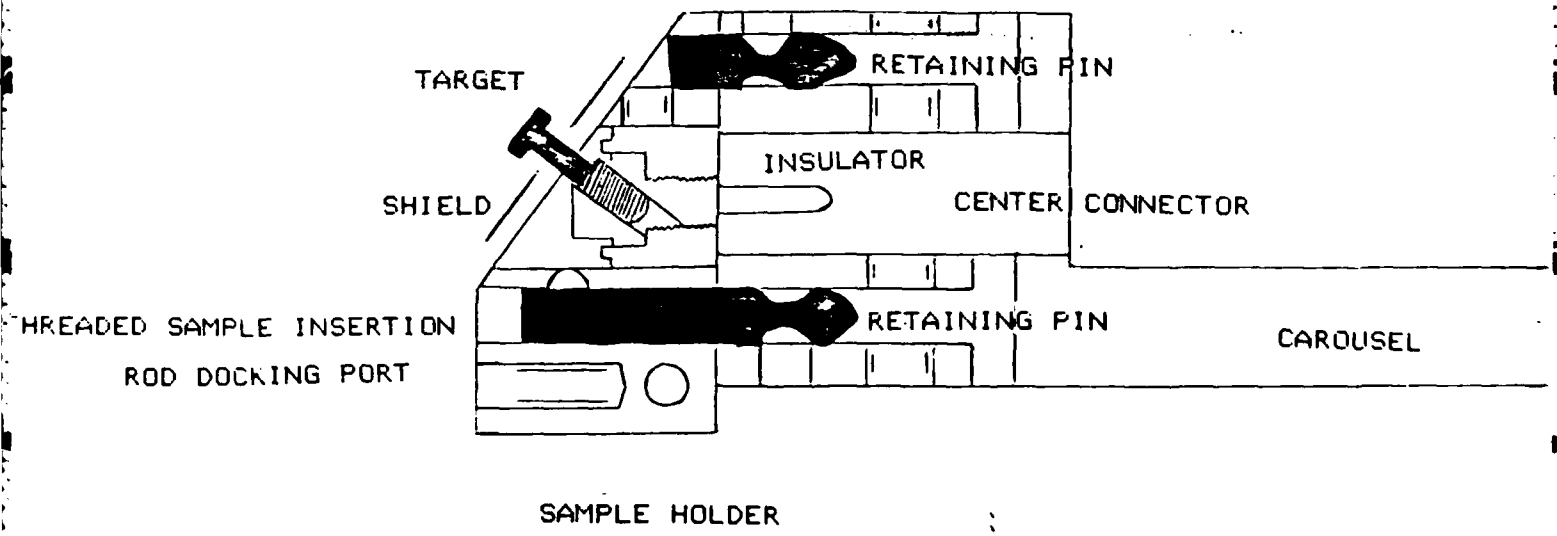

FIGURE 2.2c

CENTER CUT VIEW SHOWN - SIDE CONNECTORS NOT SHOWN

SECONDARY ION MASS SPECTROSCOPY STATION

KRATOS MINIBEAM II ION GUN
TYPICAL OPERATING PARAMETERS
BEAM DIAMETER : 35 TO 100 MICROMETERS
BEAM CURRENT : 4 TO 300 NANOAMPERES
BEAM ENERGY : 50 TO 4000 ELECTRONVOLTS
WORKING GAS ARGON

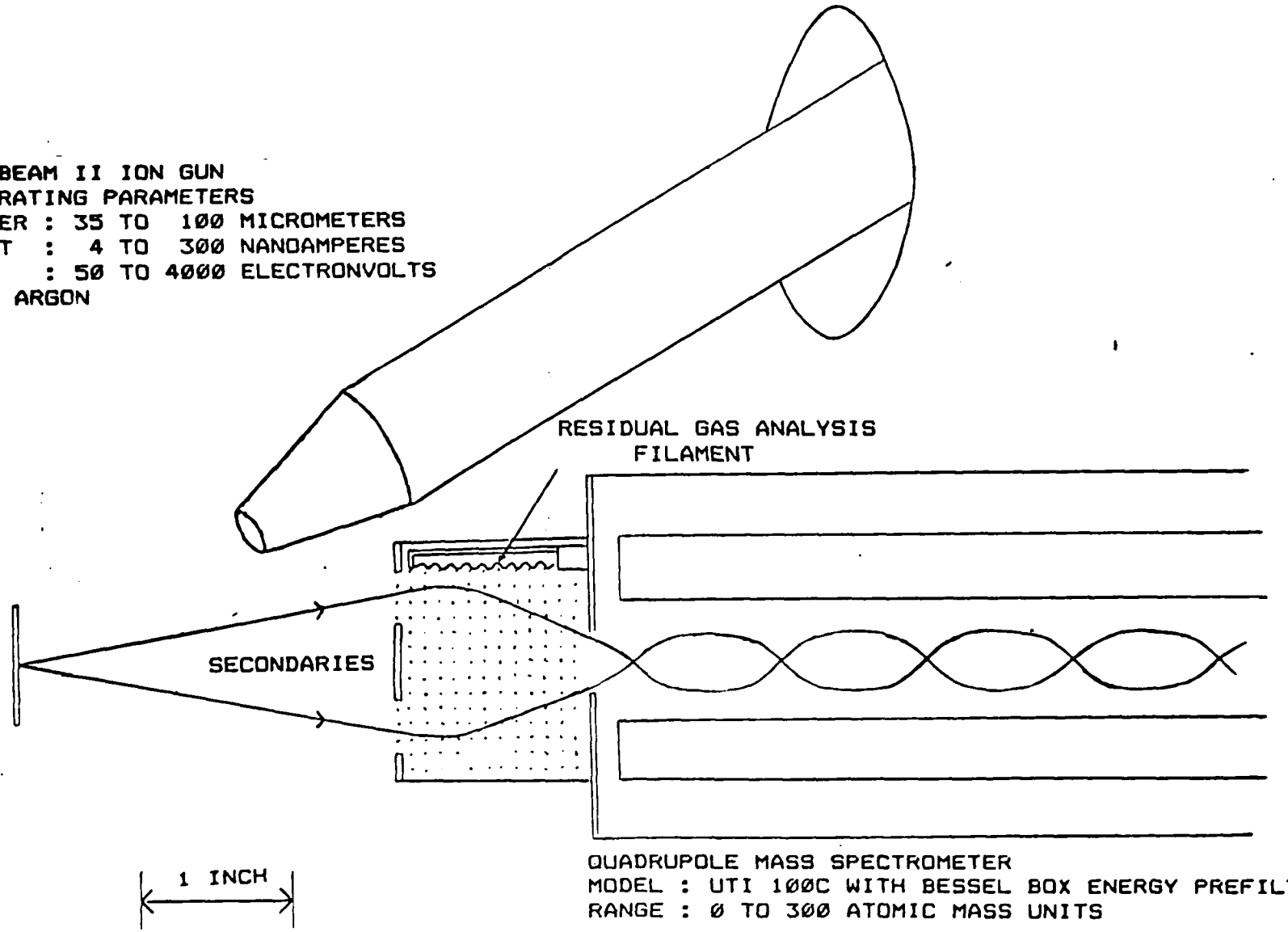

QUADRUPOLE MASS SPECTROMETER
MODEL : UTI 100C WITH BESSEL BOX ENERGY PREFILTER
RANGE : 0 TO 300 ATOMIC MASS UNITS

MODES : POSITIVE ION MASS SPECTROMETRY
NEGATIVE ION MASS SPECTROMETRY
RESIDUAL GAS ANALYSIS

FIGURE 2.2d

CYLINDRICAL MIRROR ANALYZER STATION
PERKIN-ELMER 15-255GAR

VIEW ON C.M.A. AXIS OF SAMPLE S35

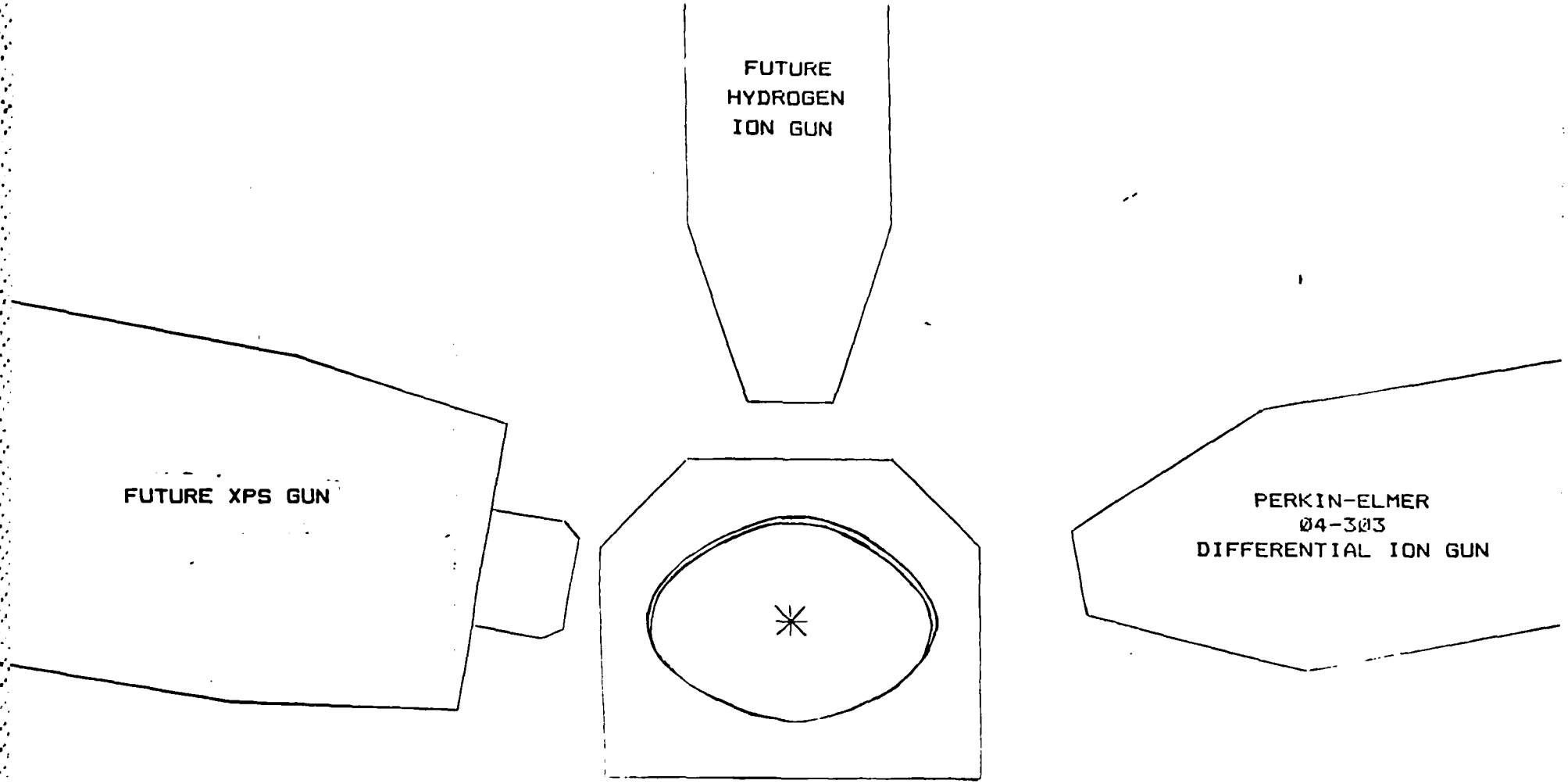

FIGURE 7.2e

07/10/84-5

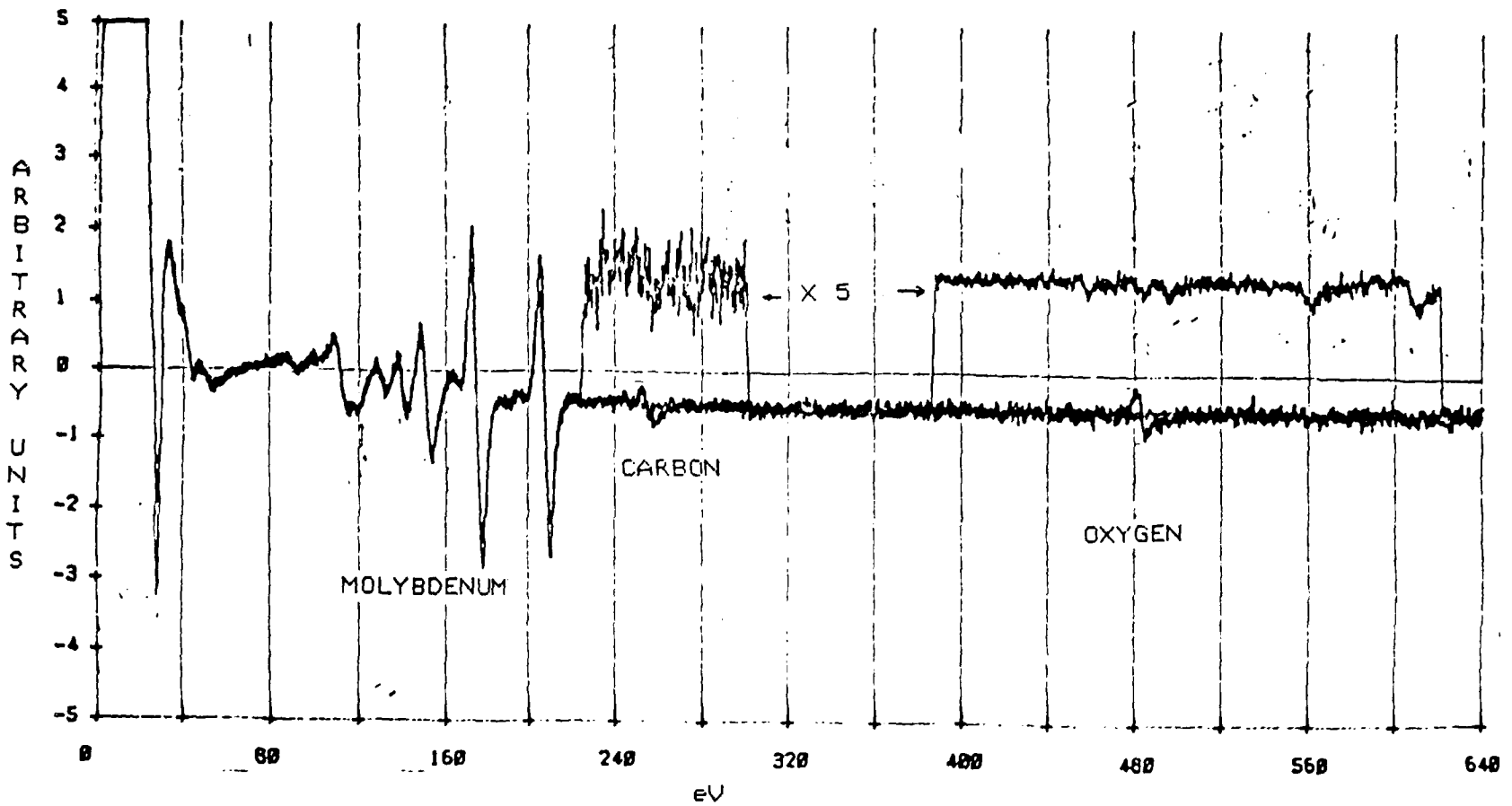

Fig. 2.5a Auger spectrum before and after cleaning. Note disappearance of carbon and oxygen peaks.

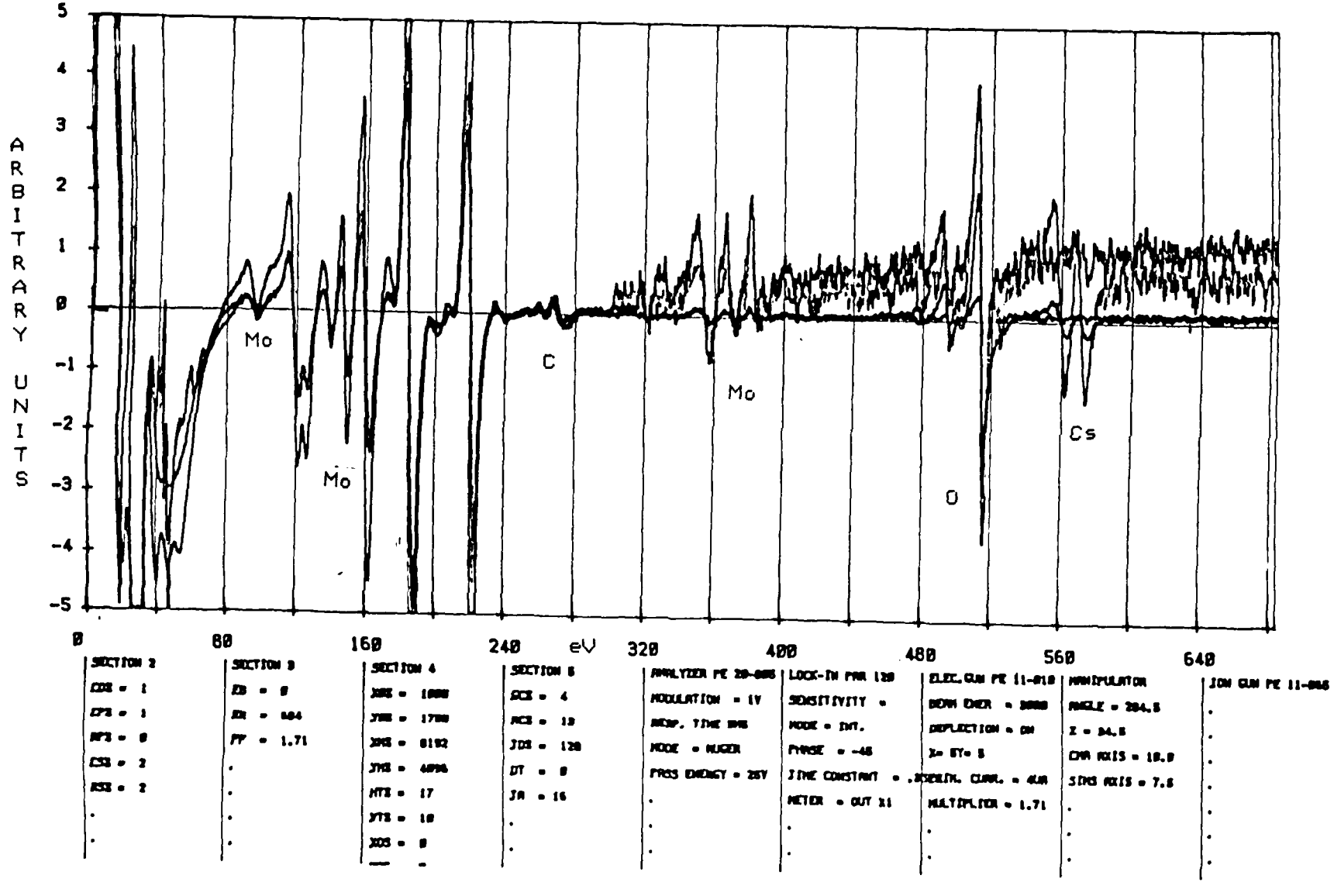

Fig. 2.5b Auger spectrum with cesium on the surface

END

FILMED

2-85

DTIC