AD-A144 148

AFWAL-TR-82-4063

INTEGRATED COMPUTER-AIDED MANUFACTURING (ICAM) ARCHITECTURE PART III

VOLUME III - COMPOSITE FUNCTION MODEL OF "DESIGN PRODUCT" (DES0)

SofTech, Inc.
460 Totten Pond Road
Waltham, MA 02154

September 1983

Final Report for September 1980 - October 1982

DTIC FILE COPY

APPROVED FOR PUBLIC RELEASE; DISTRIBUTION UNLIMITED

DTIC
ELECTE
AUG 1 4 1984
S D
A

MATERIALS LABORATORY
AIR FORCE WRIGHT AERONAUTICAL LABORATORIES
AIR FORCE SYSTEMS COMMAND
WRIGHT-PATTERSON AIR FORCE BASE, OHIO 45433

84 08 09 066

DISCLAIMER NOTICE

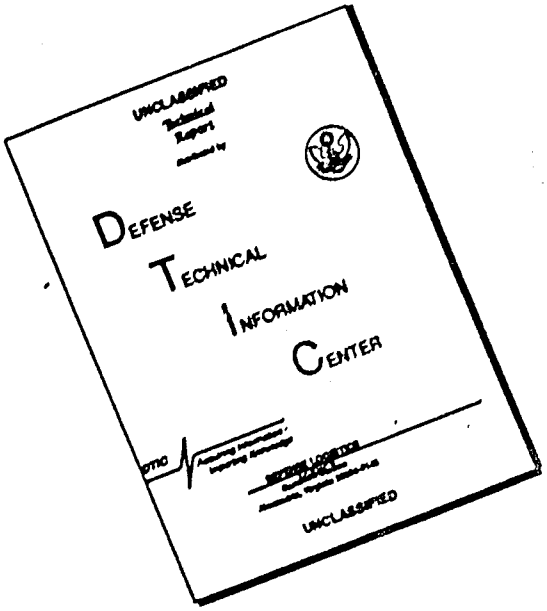

THIS DOCUMENT IS BEST QUALITY AVAILABLE. THE COPY FURNISHED TO DTIC CONTAINED A SIGNIFICANT NUMBER OF PAGES WHICH DO NOT REPRODUCE LEGIBLY.

NOTICE

When Government drawings, specifications, or other data are used for any purpose other than in connection with a definitely related Government procurement operation, the United States Government thereby incurs no responsibility nor any obligation whatsoever; and the fact that the Government may have formulated, furnished, or in any way supplied the said drawings, specifications, or other data, is not to be regarded by implication or otherwise as in any manner licensing the holder or any other person or corporation, or conveying any rights or permission to manufacture, use, or sell any patented invention that may in any way be related thereto.

This report has been reviewed by the Office of Public Affairs (ASD/PA) and is releasable to the National Technical Information Service (NTIS). At NTIS, it will be available to the general public, including foreign nations.

This technical report has been reviewed and is approved for publication.

RICHARD R. PRESTON, Captain, USAF
Project Manager
Computer Integrated Manufacturing Branch
Manufacturing Technology Division

May 2, 1984
Approval Date

FOR THE COMMANDER

NATHAN G. TUPPER
Chief
Computer Integrated Manufacturing Branch
Manufacturing Technology Division

2 May 84
Approval Date

"If your address has changed, if you wish to be removed from our mailing list, or if the addressee is no longer employed by your organization, please notify AFWAL/MLTC, Wright-Patterson AFB, Ohio 45433 to help us maintain a current mailing list."

Copies of this report should not be returned unless return is required by security considerations, contractual obligations, or notice on a specific document.

UNCLASSIFIED

SECURITY CLASSIFICATION OF THIS PAGE (When Data Entered)

REPORT DOCUMENTATION PAGE		READ INSTRUCTIONS BEFORE COMPLETING FORM
1. REPORT NUMBER AFWAL-TR-82-4063 Volume III	2. GOVT ACCESSION NO. AD-A144148	3. RECIPIENT'S CATALOG NUMBER FTR11410000U
4. TITLE and Subtitle INTEGRATED COMPUTER AIDED MANUFACTURING (ICAM) ARCHITECTURE PART III/Volume III Composite Function Model of "Design Product" (DES0)		5. TYPE OF REPORT & PERIOD COVERED Final - September 1980 through October 1982 6. PERFORMING ORG. REPORT NUMBER 1080-32
7. AUTHOR(s) Bette R. Davis, Stan Smith, M. Davies, Bill St. John		8. CONTRACT OR GRANT NUMBER(s) F33615-80-C-5109
9. PERFORMING ORGANIZATION NAME AND ADDRESS SofTech, Inc. 460 Totten Pond Road Waltham, MA 02154		10. PROGRAM ELEMENT, PROJECT, TASK AREA & WORK UNIT NUMBERS P.E. 78011F Project Priority 1104
11. CONTROLLING OFFICE NAME AND ADDRESS Materials Laboratory (AFWAL/MLTC) AF Wright Aeronautical Laboratories (AFSC) Wright-Patterson AFB, OH 45433		12. REPORT DATE May 1983 13. NUMBER OF PAGES 197
14. MONITORING AGENCY NAME & ADDRESS(if different from Controlling Office) Same As Block 11		15. SECURITY CLASS. (of this report) UNCLASSIFIED 15a. DECLASSIFICATION/DOWNGRADING SCHEDULE

16. DISTRIBUTION STATEMENT (of this Report)

Approved for Public Release; Distribution Unlimited

17. DISTRIBUTION STATEMENT (of the abstract entered in Block 20, if different from Report)

18. SUPPLEMENTARY NOTES

19. KEY WORDS (Continue on reverse side if necessary and identify by block number)

Manufacturing Architecture	ICAM	MFG1
Model of Manufacturing	IDEF	MFG01 Glossary
Integrated Computer-Aided Manufacturing	MFG0	
Subsystem Integration	DESIGN0	
Technology Transfer	DESIGN1	

20. ABSTRACT (Continue on reverse side if necessary and identify by block number)

The Integrated Computer Aided Manufacturing (ICAM) Architecture Part III was initiated to maintain and update the existing manufacturing architecture as well as develop training courses to assist in the transition of IDEF applications, concepts and procedures to other Air Force and industry programs. This volume, Volume III, presents the composite view depicting the design process as it exists today in the form of an "AS IS" Function Model of Manufacturing.

DD FORM 1 JAN 73 1473 EDITION OF 1 NOV 65 IS OBSOLETE

UNCLASSIFIED

SECURITY CLASSIFICATION OF THIS PAGE (When Data Entered)

This report is presented in the following eight volumes:

1. Volume I - Architecture Part III Accomplishments
2. Volume II - Procedures
3. Volume III - Composite Function Model of "Design Product" (DES0)
4. Volume IV - Composite Information Model of "Design Product" (DES1)
5. Volume V - Composite Function Model of "Manufacture Product" (MFG0)
6. Volume VI - Composite Information Model of "Manufacture Product" (MFG1)
7. Volume VII - MFG01 Glossary
8. Volume VIII - Technology Transfer

FTR11C4100CCU
8 September 1983

FOREWORD

This technical report covers the work performed under Air Force Contract #F33615-80-C-5109, "ICAM ARCHITECTURE, PART III," covering the period of September 1980 through October 1982. The contract is sponsored by the Computer Integrated Manufacturing Branch, Materials Laboratory, Air Force Wright Aeronautical Laboratories, Air Force Systems Command, Wright Patterson Air Force Base, Ohio, 45433. The Air Force Technical Manager for ICAM ARCHITECTURE PART III was Capt Steve R. LeClair for the basic contract and Capt Richard R. Preston for the Option.

Bette Davis is the SofTech Program Manager. The other contributors to this program are as follows:

Northrop Corporation

Rockwell International

Boeing Commercial Airplane Company

DTIC COPY INSPECTED 2

Accession For
NTIS GRA&I
DTIC TAB
Unannounced
Justification
By
Distribution/
Availability Codes
Avail and/or
Dist Special
A-1

TABLE OF CONTENTS

Section		Page
1	SCOPE	1-1
	1.1 Identification	1-1
	1.2 Background	1-1
	1.3 Functional Description of Document	1-4
2	REQUIREMENTS	2-1
	2.1 Development of the Composite Design Model	2-1
	2.2 Sub-System Support Arrows	2-1
	2.2.1 MCDS Integration	2-1
	2.2.2 QA Integration	2-2
	2.3 2-Way Arrow Removal	2-2
	2.4 $DESIGN_{\emptyset}$ Arrow Trace	2-2
3	$DES_{\emptyset}$ MODEL	3-1
	3.1 Node Index-$DES_{\emptyset}$	3-1
	3.2 $DES_{\emptyset}$ Diagrams and Text	3-9
4	DOCUMENT REQUEST ORDER FORM	4-1

SECTION 1
SCOPE

1.1 Identification

This volume documents that part of the ICAM Architecture of Manufacturing designated as $DES_{\emptyset}$. $DES_{\emptyset}$ depicts the "AS IS" architecture of the diverse activities presently performed within aerospace design from a function viewpoint.

This part of the architecture has been developed using $IDEF_{\emptyset}$ (ICAM Definition language) function modeling. The model presented, herein, $DES_{\emptyset}$ is a composite function model of the activities within "Design (Aerospace) Product". This composite view architecture represents those functions most typical of the majority of aerospace manufactures in the United States and is not intended to represent any specific company.

This volume extends and supercedes Volume VIII - Composite Function Model of "Design Product" ($DESIGN_{\emptyset}$) published in June of 1981 as part of the ICAM Architecture Part II Project Priority 1050.

This volume documents work performed under ICAM Project Priority 1104 - ICAM Architecture of Manufacturing Part III.

1.2 Background

The Integrated Computer Aided Manufacturing (ICAM) program has as its objective the improvement of productivity in the aerospace manufacturing sectors of American industry. It is directed toward improving productivity through the systematic application of computer technology in the design and manufacturing environment. This approach is not only ambitious, but is also realistic in that it stresses the development of computer aided design and manufacturing capabilities. The integration of these computer aids <u>into</u> the design and manufacturing environment and among themselves will ultimately signal the success of the ICAM program.

A key to the achievement of this goal is the development of the ICAM Definition (IDEF) Methods and the ICAM composite models of design and manufacturing. The ICAM Definition Methods are a family of techniques through which analysts and laymen explore and discuss the nature of design and manufacturing systems. These techniques, developed for the ICAM program, provide a means of studying, recording, and communicating the inherent requirements and realities of the aerospace manufacturing environment. They are equally effective and valuable in many other manufacturing and non-manufacturing environments.

There are three ICAM Definition Methods: $IDEF_0$ - Function Modeling; $IDEF_1$ - Information Modeling; and $IDEF_2$ - Dynamics Modeling. A manufacturing system is described and studied through the application of all three techniques.

The ICAM composite models of manufacturing, or architectures, record a "consensus view" of what manufacturing is and how it operates. Composite architectures are presented in two forms: the "AS IS" form - representing the way in which manufacturing is currently accomplished; and the "TO BE" form - representing the way in which manufacturing will be accomplished with computer aids in place.

As prime contractor, SofTech subcontracted to Northrop, Rockwell and Boeing the development of the "AS IS" function model of design. This model is presented in its current state of development. It is expected that refinements will continually be made to the model as a result of its use. The vast amount of information which it contains makes it impossible to comprehend by cursory examination. A tremendous effort has gone into the preparation of the model which is the end result of this project. This report summarizes that effort and presents the critical features of the resulting model. Many stages of critique, validation, and checking have been invested to make sure that the published model and glossary are as complete, readable, consistent and correct as possible.

Architecture Process

The necessary first step in increasing design productivity is to understand current design practice precisely and to record this understanding concisely. This development of understanding has two main phases:

- Study specific company design
- Evolve a composite understanding

Factory View

Understanding of the current manufacturing design process must be based on the detailed factual information which describes this process in those companies which successfully produce aerospace products. This has been called "Factory View" information. The Factory View of manufacturing design is different for each company, for each division of each plant within a company, and even somewhat different for each organization and each individual within each plant.

Composite View

One objective of ICAM is to develop improvements in the design process which will be broadly applicable across the whole aerospace industry. In order to do this, it is necessary to have some understanding of "general or generic design practice." Such an understanding emphasizes the essential information flow, functions, and material flow necessary to all design processes, while de-emphasizing the differences of organization and terminology among the various factory views.

The model representing this aggregate understanding is called the "Composite View" of design. The composite view model presented in this volume depicts design as it exists today in the form of a function model. The composite view of the existing functions carried out in design which has been produced in this project emphasizes the technical aspects of current practice for the production of a single, new major aerospace product, such as an airplane.

Architecture Validation

From the first week of the project, a constant process of review guides the development of the architecture. Each version of the architecture is distributed to the coalition members for comment. These versions receive a "Working" status meaning the architecture is undergoing change within the group responsible for its development. The comments cause changes ranging from complete restructuring of various levels of architecture to clarification of individual words used in detailing lower levels.

This process of revise, review, revise continues throughout the building of the model. When the coalition decides that the model, or portions of it, are ready for industry review, the status is changed to "Draft."

Every six months throughout the project, an Industry Review Meeting is held. The Industry Reviewers represent various manufacturing companies. They review the "Draft" version of the model to insure that it is representative of design as a whole. Portions of the model that receive a consensus of approval are marked "Recommended." This signifies that their content is recommended for Air Force acceptance. Portions that do not receive consensus remain at "Draft" status and receive further review and revision.

1.3 Functional Description of Document

This volume III documents the Architecture of Manufacturing function model of Design (DES_0) which when combined with volumes IV (DES_1), V (MFG_0), VI (MFG_1) of this report make up the complete ICAM Architecture of Manufacturing. Volume III - DES_0 is an integrated composite $IDEF_0$ model of functions indigenous to Aerospace design and manufacturing.

This volume is intended as a guide for the development of $IDEF_0$ models by systems analysts and data base designers involved in the integration of new design manufacturing and computer system technology into the design and manufacturing environment.

SECTION 2
REQUIREMENTS

2.1 Development of the Composite Design Model

During the course of Project Priority 1104, several tasks were undertaken that resulted in recommendations for changes being made to the Design Function Architecture. The three major sources of these changes were:

1. Addition of Sub-System Support Arrows Task
2. The 2-Way Arrow Removal Task
3. The $DES_{\emptyset}$ Arrow Trace Task

Each task is discussed in one of the sections which follow.

2.2 Sub-System Support Arrows

A first source of $DES_{\emptyset}$ change was the addition of sub-system support arrows. These appear as "mechanisms" that alert the reader to sub-system support roles. The sub-systems incorporated into the architecture within this volume are MCDS (Manufacturing Cost Design System) and QA (Quality Assurance). The mechanism arrows are labelled "sub-system" where more than one sub-system supports an activity.

2.2.1 MCDS Integration

The model presented in this report includes the results of partially integrating the "AS IS" Manufacturing Cost/Design Guide Computerization Subsystem Function ($IDEF_{\emptyset}$) Model into the "AS IS" Architecture of the Design Process Function ($IDEF_{\emptyset}$) Model ($DES_{\emptyset}$).

The Option III - Revised Integration Procedure (October 1980, WPAFB, Dayton, OH) was used to identify and clarify how each of the $MCDS_{\emptyset}$ lowest level functions supports one or more of the $DES_{\emptyset}$ functions (through Step 2 of the Integration Procedure). Because of the magnitude of effort required to perform the complete integration as delineated in the Integration Procedure, the integration of the $MCDS_{\emptyset}$ subsystem into the $DES_{\emptyset}$ system has been completed only through integration clarification (Section 3.2, Integration Point Description). Specifically, the integration has not been completed at this time for the Integration Communication Analysis and the Exceptions Reporting.

Further discussion of this effort is available in Appendix A of the Project Priority 1104 Technical Report dated April 1981.

2.2.2 QA Integration

The QA (Quality Assurance) model was integrated into DES$_{\emptyset}$ using the revised integration procedure presented in volume II of this report.

2.3 2-Way Arrow Removal

A second source of change to DES$_{\emptyset}$ was the removal of 2-way arrows from the activity diagrams. The decision to remove the 2-way arrows arose from a concern for the readability of the diagrams. It was felt that the syntactic form, namely, a double-headed arrow with accompanying dots, did not clearly portray (in a graphic sense) the feedback loop it represented. The transformation of the 2-way arrows into appropriate feedback loops did succeed in depicting the circular flow of data. On the other hand, the proliferation of new arrows added more pipelines to some already-crowded diagrams.

It was also noted that, in the case of diagrams with numerous ICOM's, the deletion of a 2-way arrow means that the feedback relationship between an input or control and an output would not be explicit because other entering and exiting ICOM's obscure the relationship.

In the glossary for DES$_{\emptyset}$, both the outgoing and the return arrows were defined within one entry. This practice has been continued in this report in order to retain the original close link between the intent of the two arrows. Thus, the definition of many items such as "response," "report," "change request" will be found coupled with the definition to which such items are a response. This arrangement eliminates ambiguity about such relationships.

2.4 DESIGNØ Arrow Trace

The DES$_{\emptyset}$ Arrow Trace was the largest source of change recommendations to the Design Architecture. The close examination of DES$_{\emptyset}$ required by this task produced a large body of suggested changes. These changes varied greatly and were categorized by relative significance. Although no numerical breakdown of the amount of changes in each category is available, suffice it to say that there were many more minor changes than major ones.

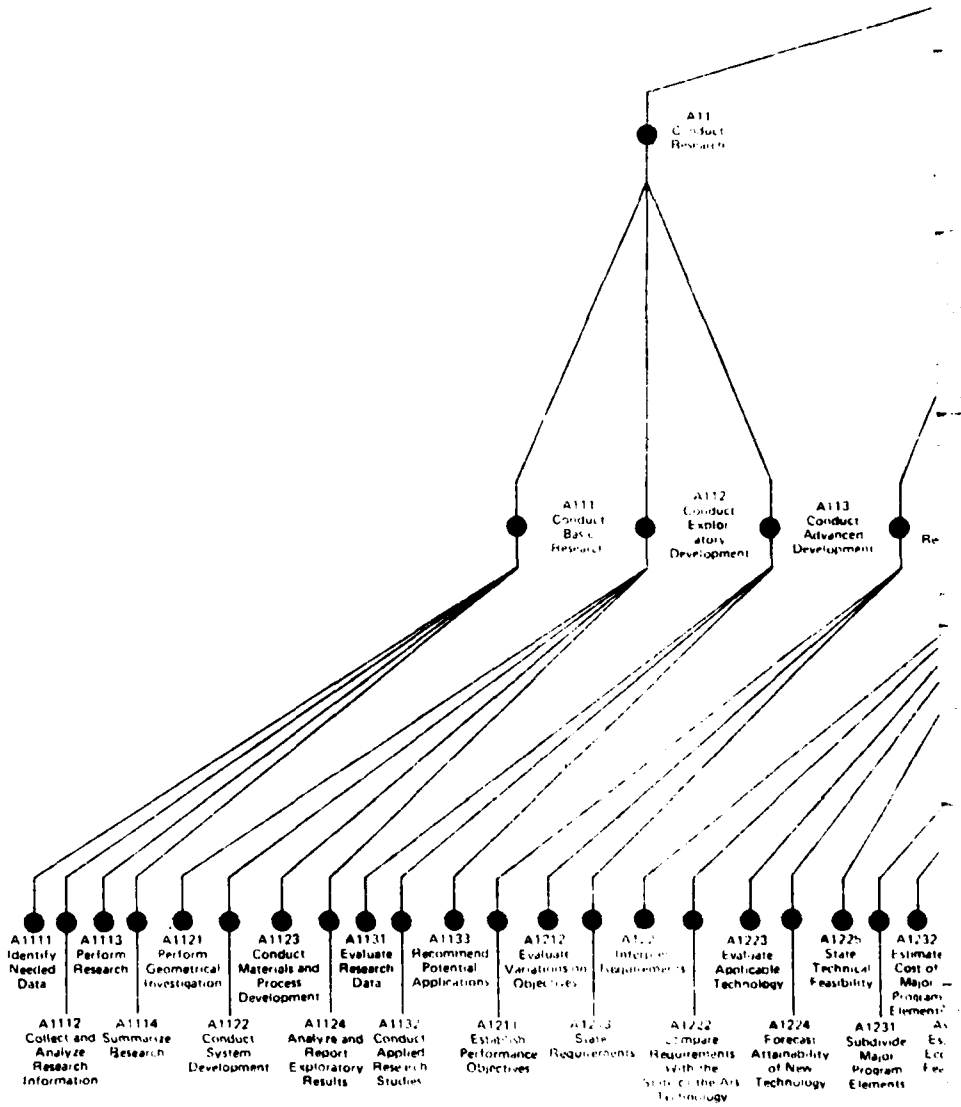
A11
Conduct
Research
A111
Conduct
Basic
Research
A112
Conduct
Exploratory
Development
A113
Conduct
Advanced
Development
A1111
Identify
Needed
Data
A1113
Perform
Research
A1121
Perform
Geometrical
Investigation
A1123
Conduct
Materials and
Process
Development
A1131
Evaluate
Research
Data
A1133
Recommend
Potential
Applications
A1212
Evaluate
Variations in
Objectives
A1223
Evaluate
Applicable
Technology
A1225
State
Technical
Feasibility
A1232
Estimate
Cost of
Major
Program
Elements
A1112
Collect and
Analyze
Research
Information
A1114
Summarize
Research
A1122
Conduct
System
Development
A1124
Analyze and
Report
Exploratory
Results
A1132
Conduct
Applied
Research
Studies
A1211
Establish
Performance
Objectives
A1222
Compare
Requirements
with the
State of the Art
Technology
A1224
Forecast
Attainability
of New
Technology
A1231
Subdivide
Major
Program
Elements

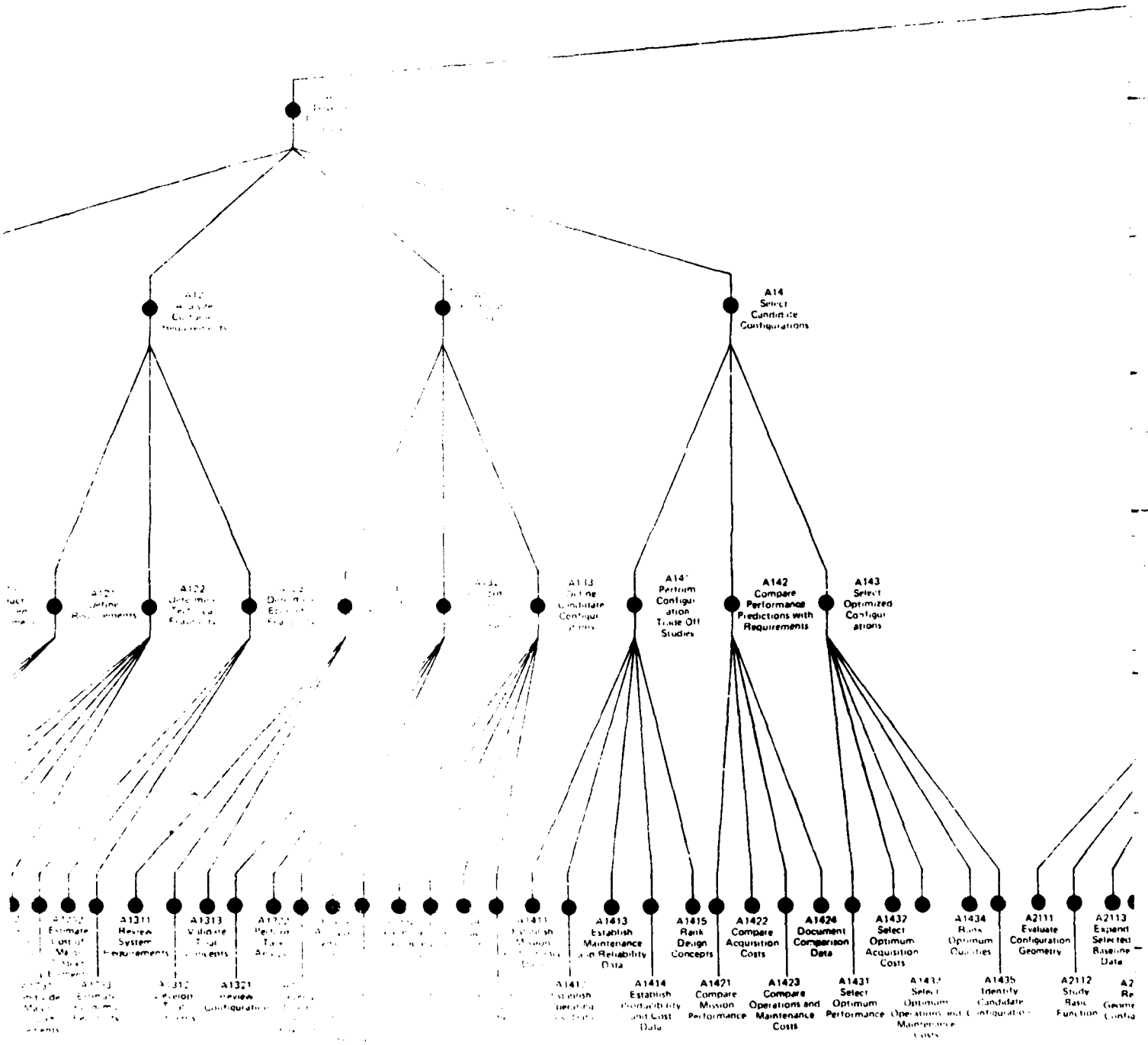
A14
Select
Candidate
Configurations
A122
A142
Compare
Performance
Predictions with
Requirements
A143
Select
Optimized
Configur
ations
A1311
Review
System
Requirements
A1313
A1321
A1413
Establish
Maintenance
and Reliability
Data
A1415
Rank
Design
Concepts
A1422
Compare
Acquisition
Costs
A1424
Document
Comparison
Data
A1432
Select
Optimum
Acquisition
Costs
A1434
A2111
Evaluate
Configuration
Geometry
A2113
Expand
Selected
Baseline
Data
A1414
Establish
Probability
and Cost
Data
A1421
Compare
Mission
Performance
A1423
Compare
Operations and
Maintenance
Costs
A1431
Select
Optimum
Performance
A1435
Identify
Candidate
A2112
Study
Basic
Function

ICAM (

2

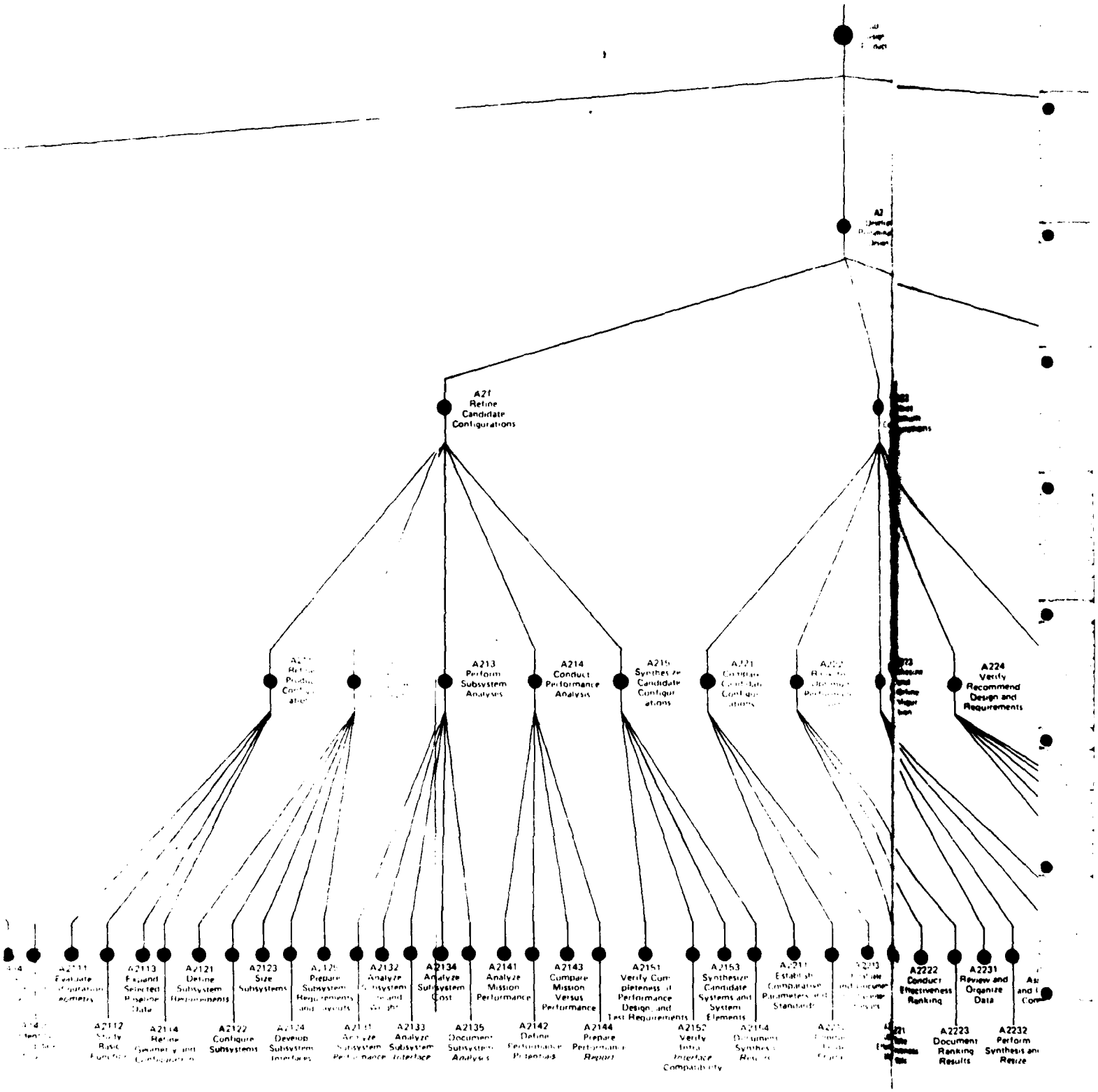

ICAM COMPOSITE VIEW OF AEROSPACE DES

3

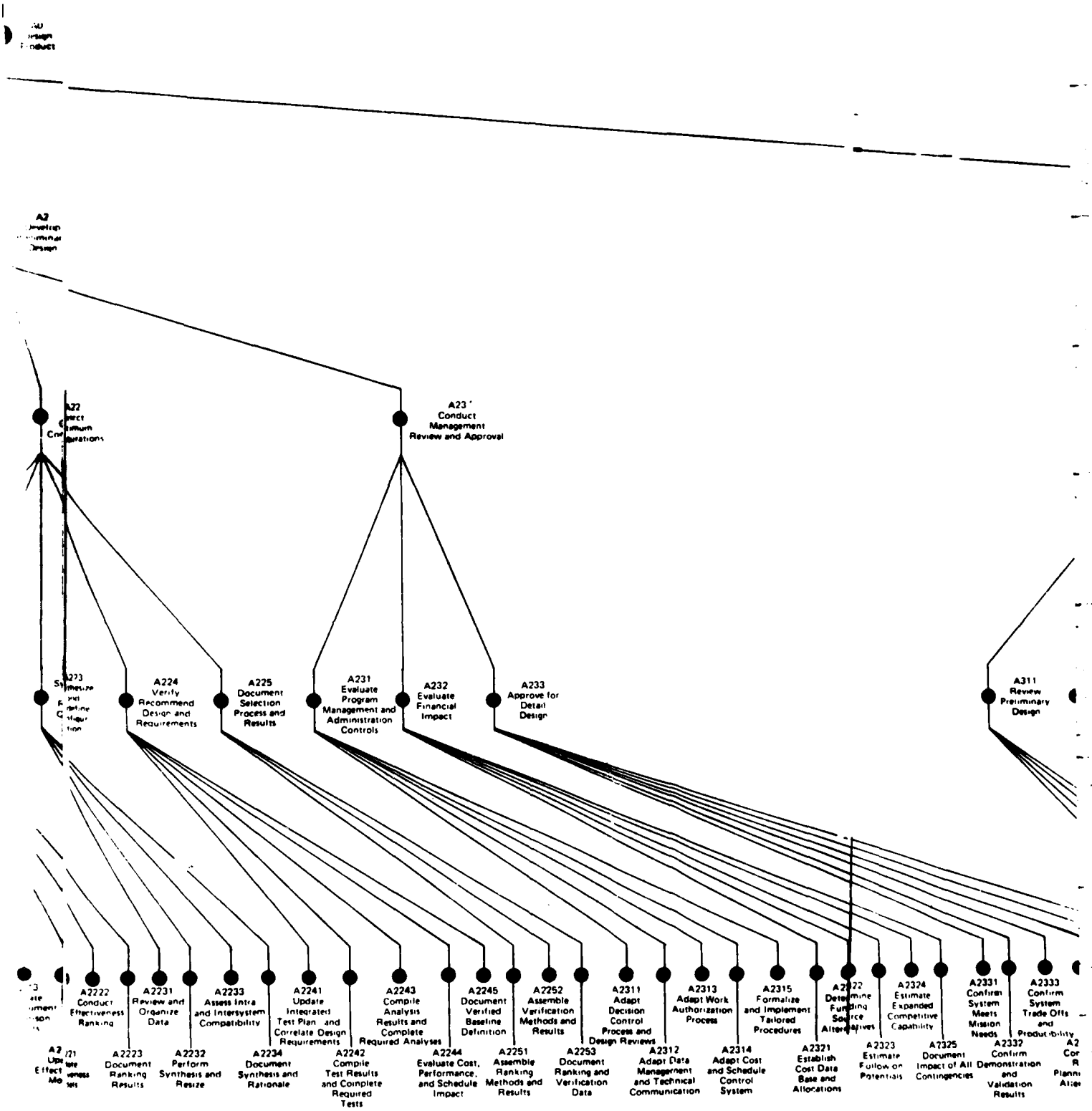

ACE DESIGN COMPLETE INDEX OF CONTENT

4

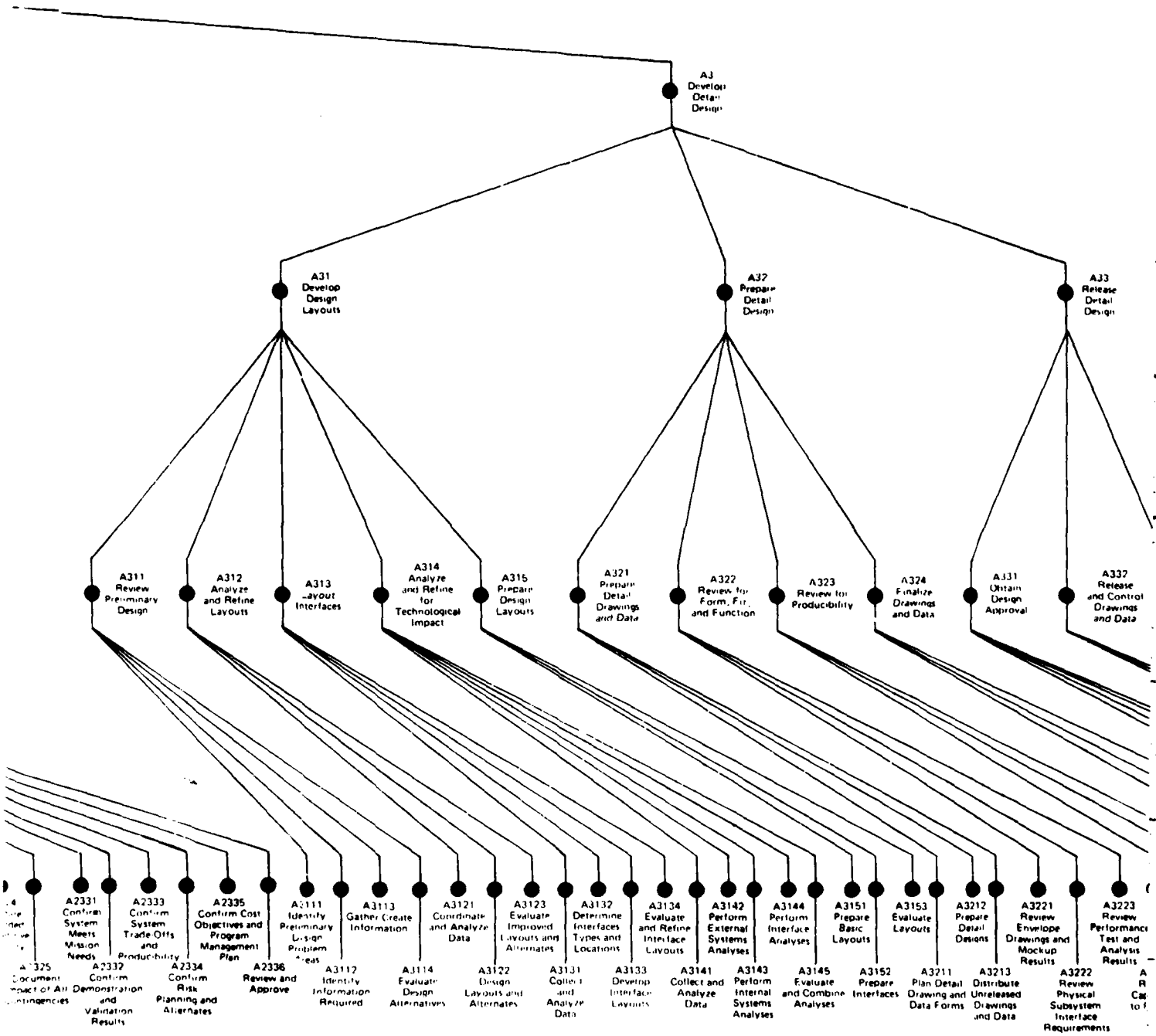
A3 Develop Detail Design
A31 Develop Design Layouts
A32 Prepare Detail Design
A33 Release Detail Design
A311 Review Preliminary Design
A312 Analyze and Refine Layouts
A313 Layout Interfaces
A314 Analyze and Refine for Technological Impact
A315 Prepare Design Layouts
A321 Prepare Detail Drawings and Data
A322 Review for Form, Fit, and Function
A323 Review for Producibility
A324 Finalize Drawings and Data
A331 Obtain Design Approval
A332 Release and Control Drawings and Data
A2331 Confirm System Meets Mission Needs
A2333 Confirm System Trade Offs and Producibility
A2335 Confirm Cost Objectives and Program Management Plan
A2332 Confirm Demonstration and Validation Results
A2334 Confirm Risk Planning and Alternates
A2336 Review and Approve
A3111 Identify Preliminary Design Problem Areas
A3113 Gather Create Information
A3112 Identify Information Required
A3114 Evaluate Design Alternatives
A3121 Coordinate and Analyze Data
A3123 Evaluate Improved Layouts and Alternates
A3122 Design Layouts and Alternates
A3132 Determine Interfaces Types and Locations
A3134 Evaluate and Refine Interface Layouts
A3131 Collect and Analyze Data
A3133 Develop Interface Layouts
A3142 Perform External Systems Analyses
A3144 Perform Interface Analyses
A3141 Collect and Analyze Data
A3143 Perform Internal Systems Analyses
A3145 Evaluate and Combine Analyses
A3151 Prepare Basic Layouts
A3152 Prepare Interfaces
A3153 Evaluate Layouts
A3212 Prepare Detail Designs
A3211 Plan Detail Drawing and Data Forms
A3213 Distribute Unreleased Drawings and Data
A3221 Review Envelope Drawings and Mockup Results
A3222 Review Physical Subsystem Interface Requirements
A3223 Review Performance Test and Analysis Results

ONTENTS

FTR110410000U
8 September 1983

ICAM

INTEGRATED COMPUTER-AIDED MANUFACTURING

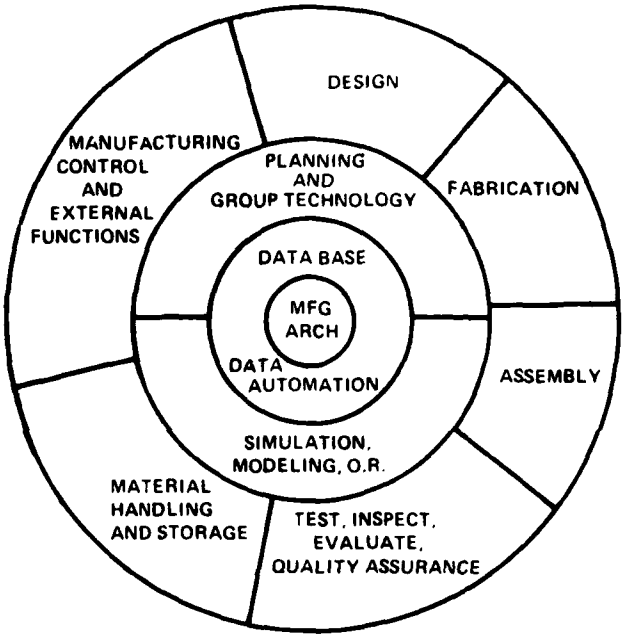

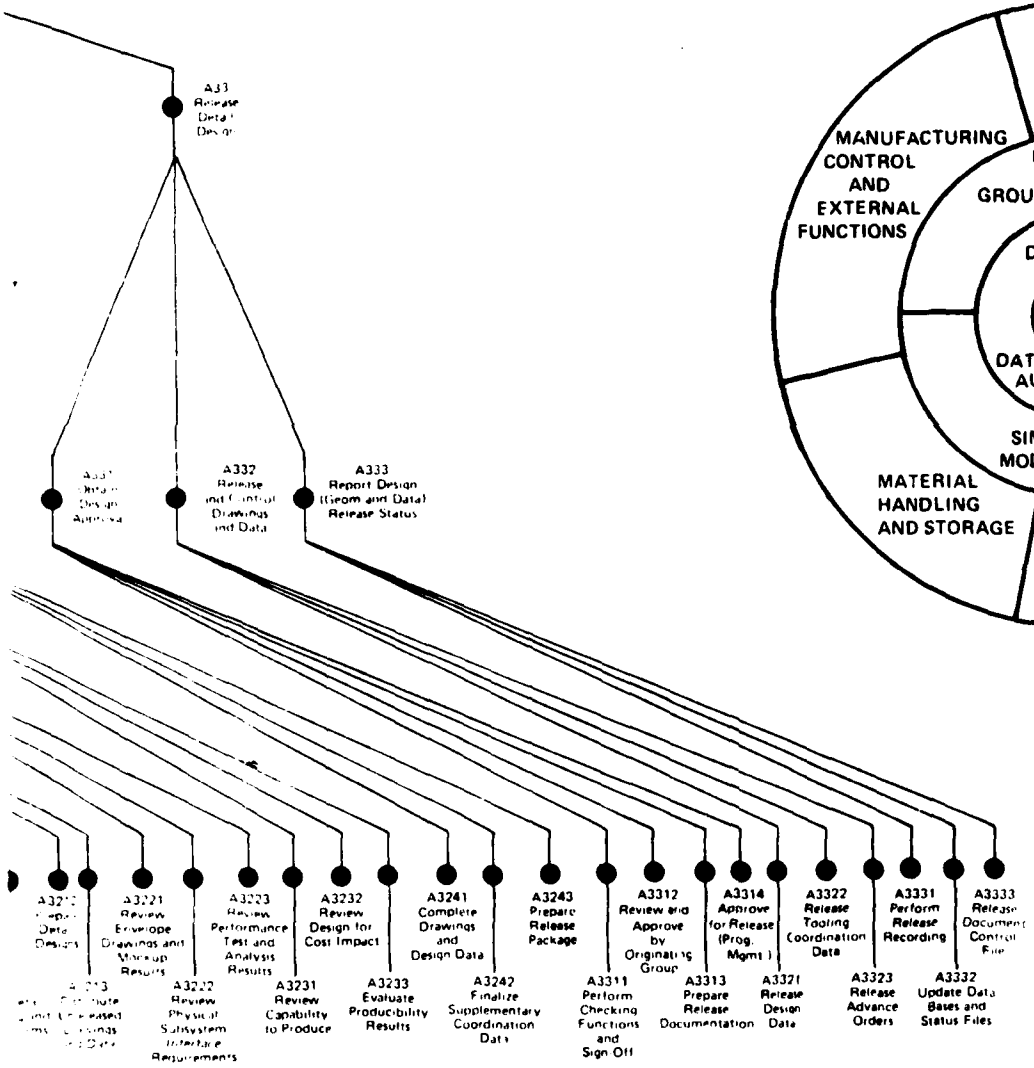

6

FTR110410000U
8 September 1983

ICAM

INTEGRATED COMPUTER-AIDED MANUFACTURING

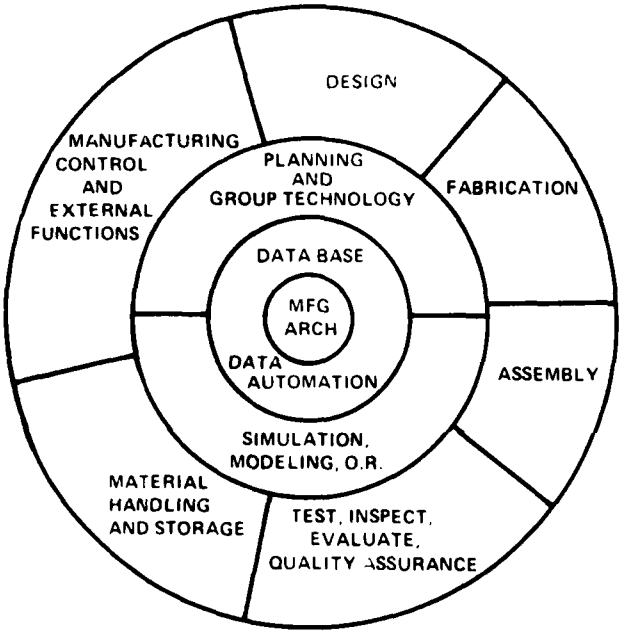

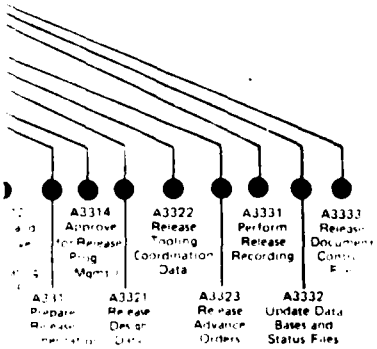

SECTION 3
DESØ MODEL

3.1 Node Index-DESØ

Node Index of Context Diagrams

A-3 Get and Use Aerospace Product (Context)

A-2 Get and Use Aerospace Product

- 1 Plan to Accomplish Objectives
- A-1 2 Develop and Produce Aerospace Product
  - 1 Manage Product
  - A-0 2 Design Product
  - 3 Manufacture Product
  - 4 Provide for Product Logistics
- 3 Use Product
- 4 Maintain, Retrofit, Rebuild Product

Node Index of Main Model

A-0 Design Product (Context)

A0 Design Product

A1 Develop Conceptual Design

- A11 Conduct Research
  - A111 Conduct Basic Research
    - A1111 Identify Needed Data
    - A1112 Collect and Analyze Research Information
    - A1113 Perform Research
    - A1114 Summarize Research
  - A112 Conduct Exploratory Development
    - A1121 Perform Geometrical Investigation
    - A1122 Conduct System Development
    - A1123 Conduct Materials and Process Development
    - A1124 Analyze and Report Exploratory Results
  - A113 Conduct Advanced Development
    - A1131 Evaluate Research Data
    - A1132 Conduct Applied Research Studies
    - A1133 Recommend Potential Applications

A12 Analyze Customer Requirements

- A121 Define Requirements
  - A1211 Establish Performance Objectives
  - A1212 Evaluate Variations on Objectives
  - A1213 State Requirements
- A122 Determine Technical Feasibility
  - A1221 Interpret Requirements
  - A1222 Compare Requirements With the State-of-the-Art Technology
  - A1223 Evaluate Applicable Technology
  - A1224 Forecast Attainability of New Technology
  - A1225 State Technical Feasibility
- A123 Determine Economic Feasibility
  - A1231 Subdivide Major Program Elements
  - A1232 Estimate Cost of Major Program Elements
  - A1233 Estimate Economic Feasibility

A13 Formulate Concepts

- A131 Develop Product Concepts
  - A1311 Review System Requirements
  - A1312 Develop Trial Concepts
  - A1313 Validate Trial Concepts
- A132 Perform Interdisciplinary Studies
  - A1321 Review Configuration
  - A1322 Perform Task Analysis
  - A1323 Develop Design Concepts Layouts
  - A1324 Analyze Dynamic Properties
- A133 Define Candidate Configurations
  - A1331 Refine Design Requirements and Assumptions
  - A1332 Determine Acceptable Geometry
  - A1333 Conduct Performance Analysis
  - A1334 Conduct Operational Analysis
  - A1335 Perform Product Synthesis

A14 Select Candidate Configuration

A141 Perform Configuration Trade-Off Studies

A1411 Establish Mission Performance Data

A1412 Establish Operating Cost Data

A1413 Establish Maintenance and Reliability Data

A1414 Establish Producibility and Cost Data

A1415 Rank Design Concepts

A142 Compare Performance Predictions With Requirements

A1421 Compare Mission Performance

A1422 Compare Acquisition Costs

A1423 Compare Operations and Maintenance Costs

A1424 Document Comparison Data

A143 Select Optimized Configurations

A1431 Select Optimum Performance

A1432 Select Optimum Acquisition Costs

A1433 Select Optimum Operations and Maintenance Costs

A1434 Rank Optimum Qualities

A1435 Identify Candidate Configurations

A2 Develop Preliminary Design

A21 Refine Candidate Configurations

A211 Refine Product Configurations

A2111 Evaluate Configuration Geometry

A2112 Study Basic Function

A2113 Expand Selected Baseline Data

A2114 Refine Geometry and Configuration

A212 Define Subsystem Concepts

A2121 Define Subsystem Requirements

A2122 Configure Subsystems

A2123 Size Subsystems

A2124 Develop Subsystem Interfaces

A2125 Prepare Subsystem Requirements and Layouts

A213 Perform Subsystem Analyses

A2131 Analyze Subsystem Performance

A2132 Analyze Subsystem Size and Weight

A2133 Analyze Subsystem Interface

A2134 Analyze Subsystem Cost

A2135 Document Subsystem Analyses

A214 Conduct Performance Analysis

A2141 Analyze Mission Performance

A2142 Define Performance Potentials

A2143 Compare Mission Versus Performance

A2144 Prepare Performance Report

A215 Synthesize Candidate Configurations

A2151 Verify Completeness of Performance, Design, and Test Requirements

A2152 Verify Intra-/Interface Compatibility

A2153 Synthesize Candidate Systems and System Elements

A2154 Document Synthesis Results

A22 Select Optimum Configuration

A221 Compare Candidate Configurations

A2211 Establish Comparative Parameters and Standards

A2212 Conduct Trade Studies

A2213 Evaluate and Document Comparison Results

A222 Rank for Optimum Performance, Cost

A2221 Update Effectiveness Models

A2222 Conduct Effectivesness Ranking

A2223 Document Ranking Results

A223 Synthesize and Redefine Configuration

A2231 Review and Organize Data

A2232 Perform Synthesis and Resize

A2233 Assess Intra and Intersystem Compatibility

A2234 Document Synthesis and Rationale

A224 Verify Recommended Design and Requirements

- A2241 Update Integrated Test Plan and Correlate Design Requirements
- A2242 Compile Test Results and Complete Required Tests
- A2243 Compile Analysis Results and Complete Required Analyses
- A2244 Evaluate Cost, Performance, and Schedule Impact
- A2245 Document Verified Baseline Definition

A225 Document Selection Process and Results

- A2251 Assemble Ranking Methods and Results
- A2252 Assemble Verification Methods and Results
- A2253 Document Ranking and Verification Data

A23 Conduct Management Review and Approval

A231 Evaluate Program Management and Administration Controls

- A2311 Adapt Decision Control Process and Design Reviews
- A2312 Adapt Data Management and Technical Communication
- A2313 Adapt Work Authorization Process
- A2314 Adapt Cost and Schedule Control System
- A2315 Formalize and Implement Tailored Procedures

A232 Evaluate Financial Impact

- A2321 Establish Cost Data Base and Allocations
- A2322 Determine Funding Source Alternatives
- A2323 Estimate Follow-on Potentials
- A2324 Estimate Expanded Competitive Capability
- A2325 Document Impact of All Contingencies

A233 Approve for Detail Design

- A2331 Confirm System Meets Mission Needs
- A2332 Confirm Demonstration and Validation Results
- A2333 Confirm System Trade-Offs and Producibility

A2334 Confirm Risk Planning and Alternates

A2335 Confirm Cost Objectives and Program Management Plan

A2336 Review and Approve

A3 Develop Detail Design

A31 Develop Design Layouts

A311 Review Preliminary Design

A3111 Identify Preliminary Design Problem Areas

A3112 Identify Information Required

A3113 Gather/Create Information

A3114 Evaluate Design Alternatives

A312 Analyze and Refine Preliminary Design Layouts

A3121 Coordinate and Analyze Data

A3122 Design Layouts and Alternates

A3123 Evaluate Improved Layouts and Alternates

A313 Lay Out Interfaces

A3131 Collect and Analyze Data

A3132 Determine Interface Types and Locations

A3133 Develop Interface Layouts

A3134 Evaluate and Refine Interface Layouts

A314 Analyze and Refine for Technological Impact

A3141 Collect and Analyze Data

A3142 Perform External Systems Analyses

A3143 Perform Internal Systems Analyses

A3144 Perform Interface Analysis

A3145 Evaluate Analyses

A315 Prepare Design Layouts

A3151 Prepare Basic Layouts

A3152 Prepare Interface Layouts

A3153 Evaluate Layouts

A32 Prepare Detail Design

- A321 Prepare Detail Drawings and Data
  - A3211 Plan Detail Drawings and Data Forms
  - A3212 Prepare Detail Designs
  - A3213 Distribute Unreleased Drawings and Data
- A322 Review for Form, Fit, and Function
  - A3221 Review Envelope Drawings and Mockup Results
  - A3222 Review Physical Subsystem Interface Requirements
  - A3223 Review Performance Test and Analysis Results
- A323 Review for Producibility
  - A3231 Review Capability to Produce
  - A3232 Review Design for Cost Impact
  - A3233 Evaluate Producibility Results
- A324 Finalize Drawings and Data
  - A3241 Complete Drawings and Design Data
  - A3242 Finalize Supplementary Coordination Data
  - A3243 Prepare Release Package

A33 Release Detail Design

- A331 Obtain Design Approval
  - A3311 Perform Checking Functions and Sign Off
  - A3312 Review and Approve by Originating Group
  - A3313 Prepare Release Documentation
  - A3314 Approve for Release (Program Management)
- A332 Release and Control Drawings and Data
  - A3321 Release Design Data
  - A3322 Release Tooling Coordination Data
  - A3323 Release Advance Orders
- A333 Report Design Release Status
  - A3331 Perform Release Recording
  - A3332 Update Data Bases and Status Files
  - A3333 Release Document Control File

SECTION 3.2

DESØ DIAGRAMS AND TEXT

A-3 GET AND USE AEROSPACE PRODUCT

The objective of this model is to perceive, understand, and record the architecture of complex configuration design. The modeling effort was conducted in the aerospace environment and consequently reflects much of the aerospace design idiom; but, it is believed that this model closely approximates a universal design architecture. The close approximation of this model to a universal was deliberate; and, it was done so that the architecture could be generalized and usefully applied by industry in general.

Although the realm of aerospace design is reasonably well-defined, it is but one part of the total aerospace industry. It is helpful to view it in this context, so a series of diagrams is presented to locate design in the larger frame of reference. They should be read in the sequence A-3, A-2, A-1, and A-0. The trail begins with a statement of a need, or needs. To meet these needs, resources of many sorts are converted into systems. This monolithic view of the aerospace industry can be summarized by a single high-level activity box entitled, "GET AND USE AEROSPACE PRODUCT."

Glossary

Needs

Objectives and assignments which are to be accomplished. (In the case of the Air Force, those military objectives which are in the national interest.)

Results

The transformation of the resources, accomplished by obtaining and using an aerospace product.

Resources

All of those things which are available to be used in satisfying the need, for example; money, men, material, equipment, technology, and knowledge. In short, anything that is available to be used.

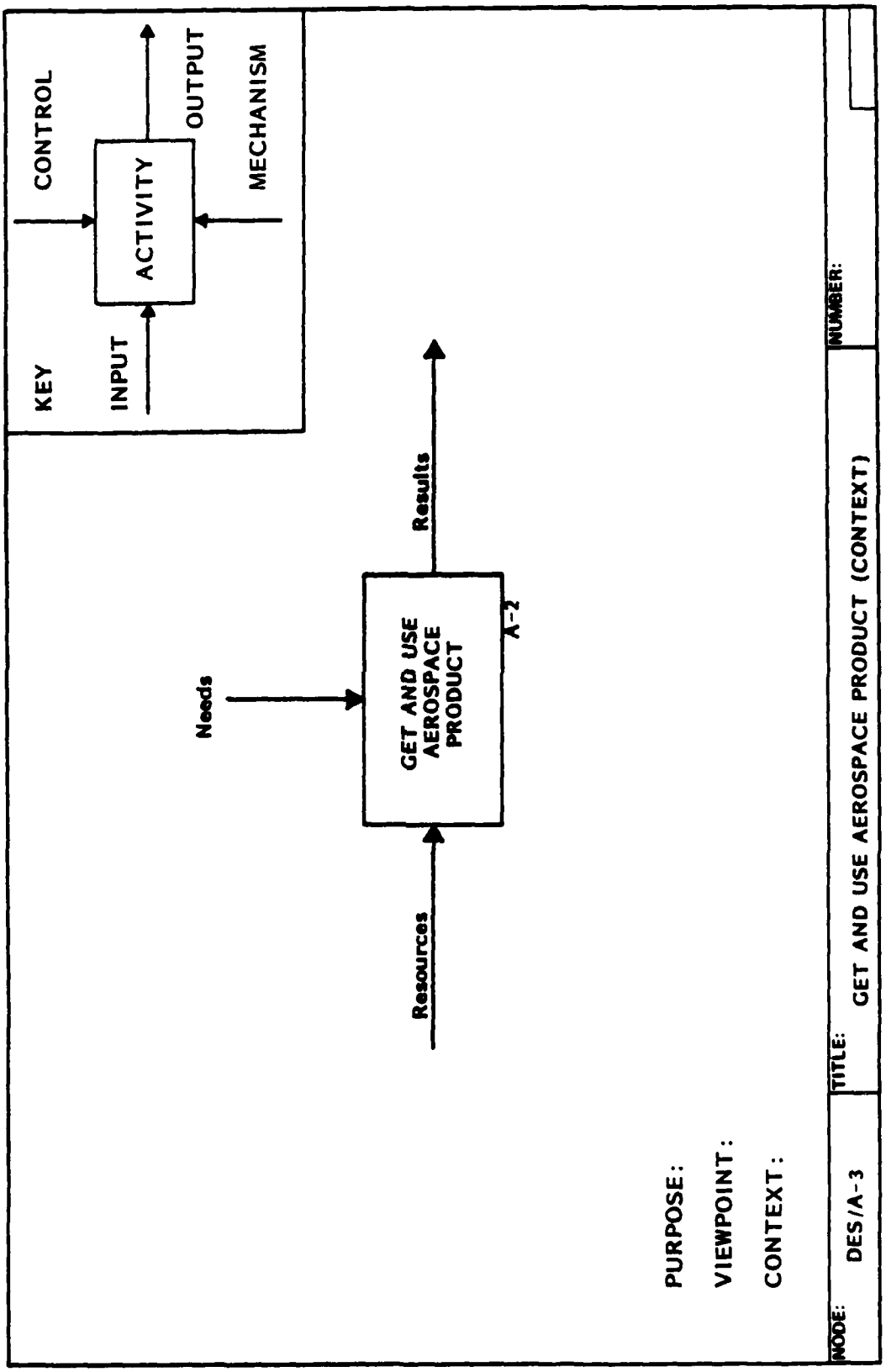
KEY
INPUT
ACTIVITY
CONTROL
OUTPUT
MECHANISM
Needs
GET AND USE AEROSPACE PRODUCT
A-2
Results
Resources
PURPOSE:
VIEWPOINT:
CONTEXT:
NODE:
DES/A-3
TITLE:
GET AND USE AEROSPACE PRODUCT (CONTEXT)
NUMBER:

A-2 GET AND USE AEROSPACE PRODUCT

Diagram A-2 portrays the four major activities to be found within Diagram A-3, beginning with the broad statement of needs.

Box 1 – A plan is created to fulfill these needs within the constraints of known technology, time, and resources availability. This plan creation is done by the Air Force, with the assistance of the contractor. The output is contracts and systems requirements.

Box 2 – The next activity is the development (from scratch, or from a previous system) of the product–its perfection, testing, design, and production in the desired quantities. This activity would be done by an aerospace manufacturer, consuming raw materials, components, time, and energy, and outputting the desired products, plus spare parts, support equipment, etc.

Box 3 – The third activity is the use of the product systems by the Air Force, the airlines, NASA, etc. The end result is the fulfillment of the needs as originally stated.

Box 4 – The fourth activity recognizes that, if the product systems are to remain in use, facilities must be provided for maintenance and repair.

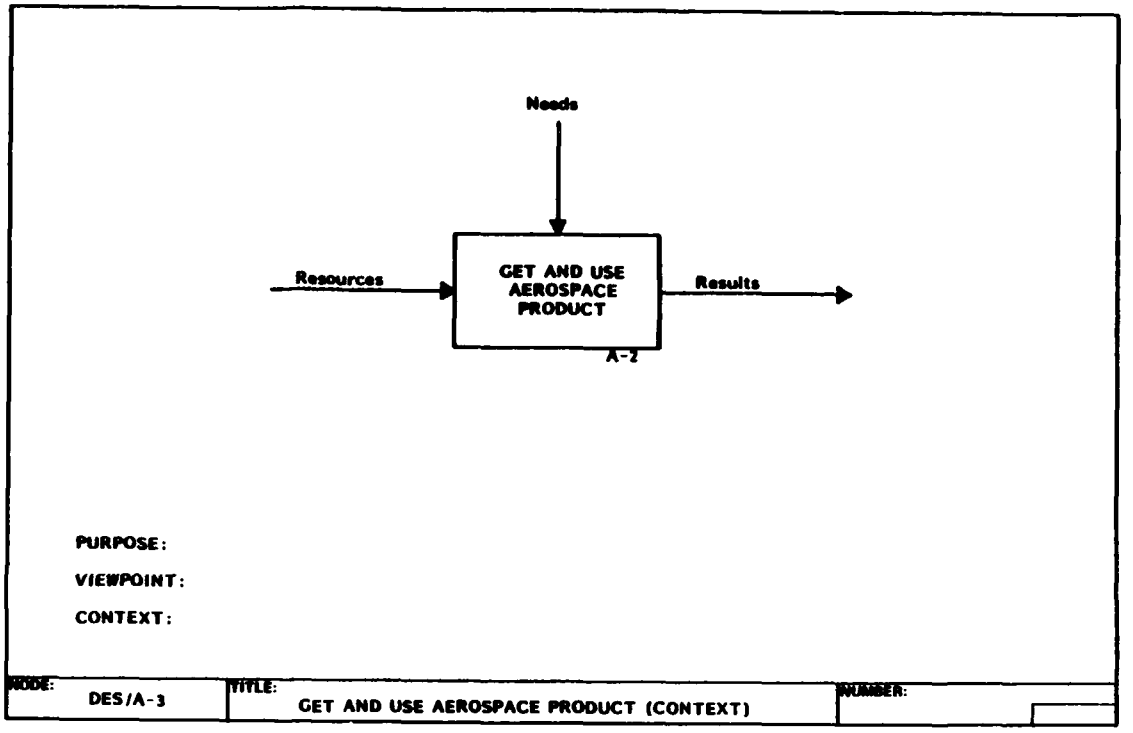

Activities three and four may feed back requests for product design modifications, and activities two, three, and four may feed back reports which affect the original plan and its continuance.

Note that all four activities go on in parallel much of the time.

Glossary

Procurable Items

Those things which can be obtained by purchase, subcontract, interdivision transfer, or can be furnished by the customer. It includes people, facilities, tools, materials, and equipment which can be hired as well.

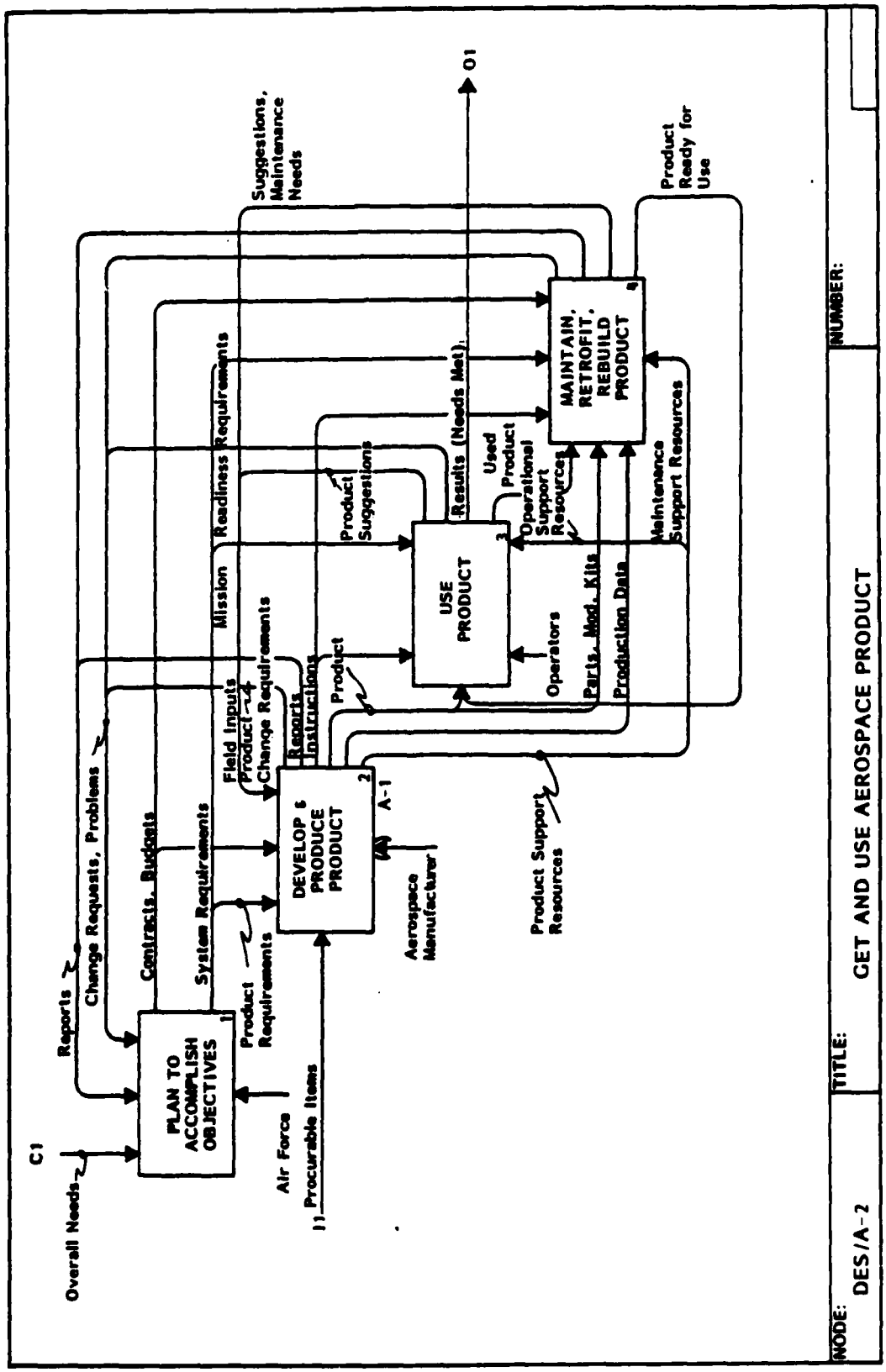
PLAN TO ACCOMPLISH OBJECTIVES
DEVELOP & PRODUCE PRODUCT
USE PRODUCT
MAINTAIN, RETROFIT, REBUILD PRODUCT
C1
Overall Needs
Reports
Change Requests, Problems
Contracts, Budgets
System Requirements
Product Requirements
Air Force
Procurable Items
I1
Field Inputs
Product
Change Requirements
Reports
Instructions
Product
Mission
Readiness Requirements
Product Suggestions
Results (Needs Met)
Used Product
Operational Support Resources
Operators
Parts, Mod. Kits
Production Data
Maintenance Support Resources
Product Support Resources
Aerospace Manufacturer
A-1
Suggestions, Maintenance Needs
Product Ready for Use
O1
NODE: DES/A-2
TITLE: GET AND USE AEROSPACE PRODUCT
NUMBER:

(A-2 Glossary Continued)

Product Requirements

The capabilities and functions, performance specifications, as well as the production needs for the product.

System Requirements/Change Requests, Problems

The Control (sys. reqmts) represents the total requirements for the product and its use and maintenance. The Output (change requests, problems) is related to product requirements, readiness requirements, and the mission assignments. They are any recommendations from the developer, user, or the maintainer of the product as to how it could be better.

Contracts, Budgets/Reports

The Control (contracts, budgets) consists of that information which directs a manufacturer to do his job. The Output (reports) consists of reports of satisfaction of (or problems in satisfying) the contracts.

Field Inputs

The suggestions for improvements in the product or documentation arising from its use or maintenance. Also includes needs for parts or materials for maintenance.

Instructions

Documentation for using, maintaining, reworking, or rebuilding the product.

Product

The item delivered to the customer for use (as in the case of the Air Force, the airplane, missile, etc.).

Production Data

The detailed description of each specific serial number of the product, change levels, serial number of the components which it contains, etc. It describes exactly what this particular instance of the product is. It does not include how to use it or how to repair it. It may include the bill of material with change level of each part for this serial number of the product.

Maintenance Support Resources

The facilities, ground support equipment, and special tools required for the maintenance (or even retrofitting or rebuilding) of the product. May also include maintenance personnel.

Aerospace Manufacturer

The industrial manufacturing company or corporation which produces the aerospace product.

A-1 DEVELOP AND PRODUCE PRODUCT

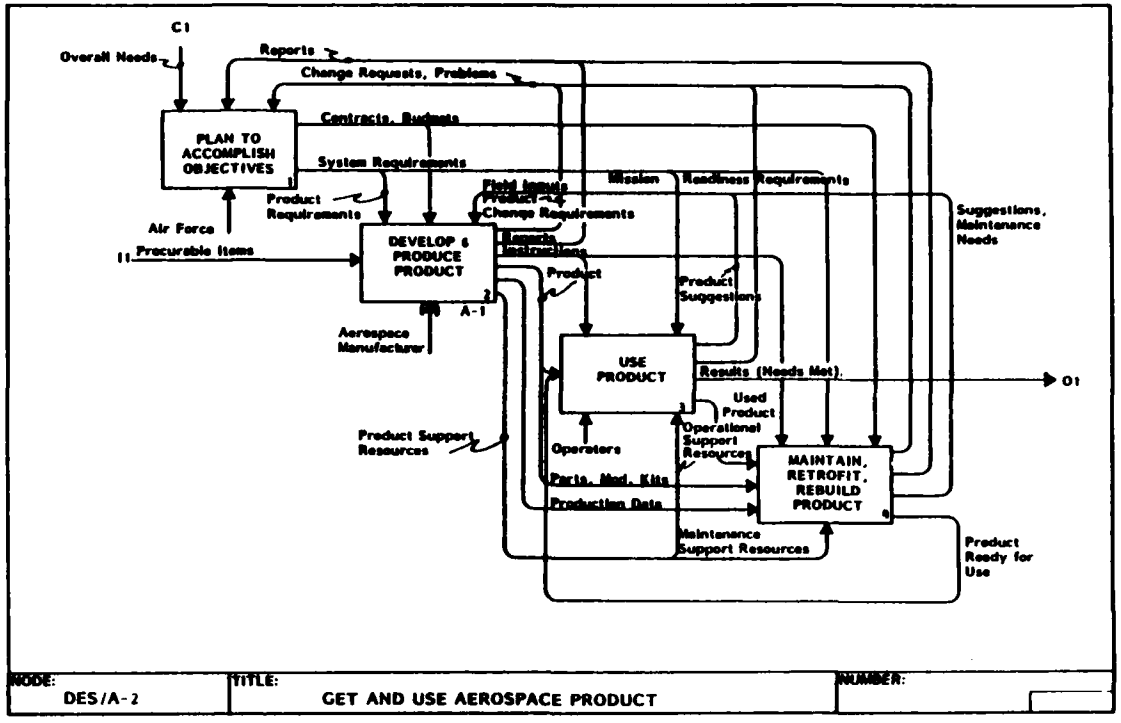

Diagram A-1 expands on the activities included in the second box of A-2, entitled, "Develop and Produce Product". "Product" here means the aerospace product and all the supporting systems.

Box 1 – Such massive undertakings clearly require a managerial function, continuing throughout the life cycle of the product, and reaching into every level of the activity. This pervasive function involves both receipt of reports and the dispatch of directives.

Box 2 – The conception of product, its refinement, test, and final design is a function which is accomplished once for a given product, and ends when the design is released to manufacture. However, in the real world there are always changes required and the Design function continues to be responsible for them. It is this activity on which the rest of our effort is focused.

Box 3 – Manufacturing a product is usually a repetitive function, continuing substantially throughout the product life cycle. It receives the design (drawings, specifications, models, etc.) from Design, and outputs the products, spare and repair parts, and technical data on each instance (each serial number) of the product. It also may build prototypes for Design.

Box 4 – Finally, provision must be made for field support of the product. The design is reviewed in the light of the support requirements, and modifications necessary for logistics considerations are recommended. Needed parts are identified based both on the support requirements and maintenance needs reported from the field. This activity supplies field support information (operation and maintenance manuals) and resources (facilities, ground support equipment, tools, etc.).

Glossary

Contracts, Budgets/Reports

The Control (contracts, budgets) – See A-2 Glossary. The Output (reports) – See A-2 Glossary.

FTR110410000U
8 September 1983

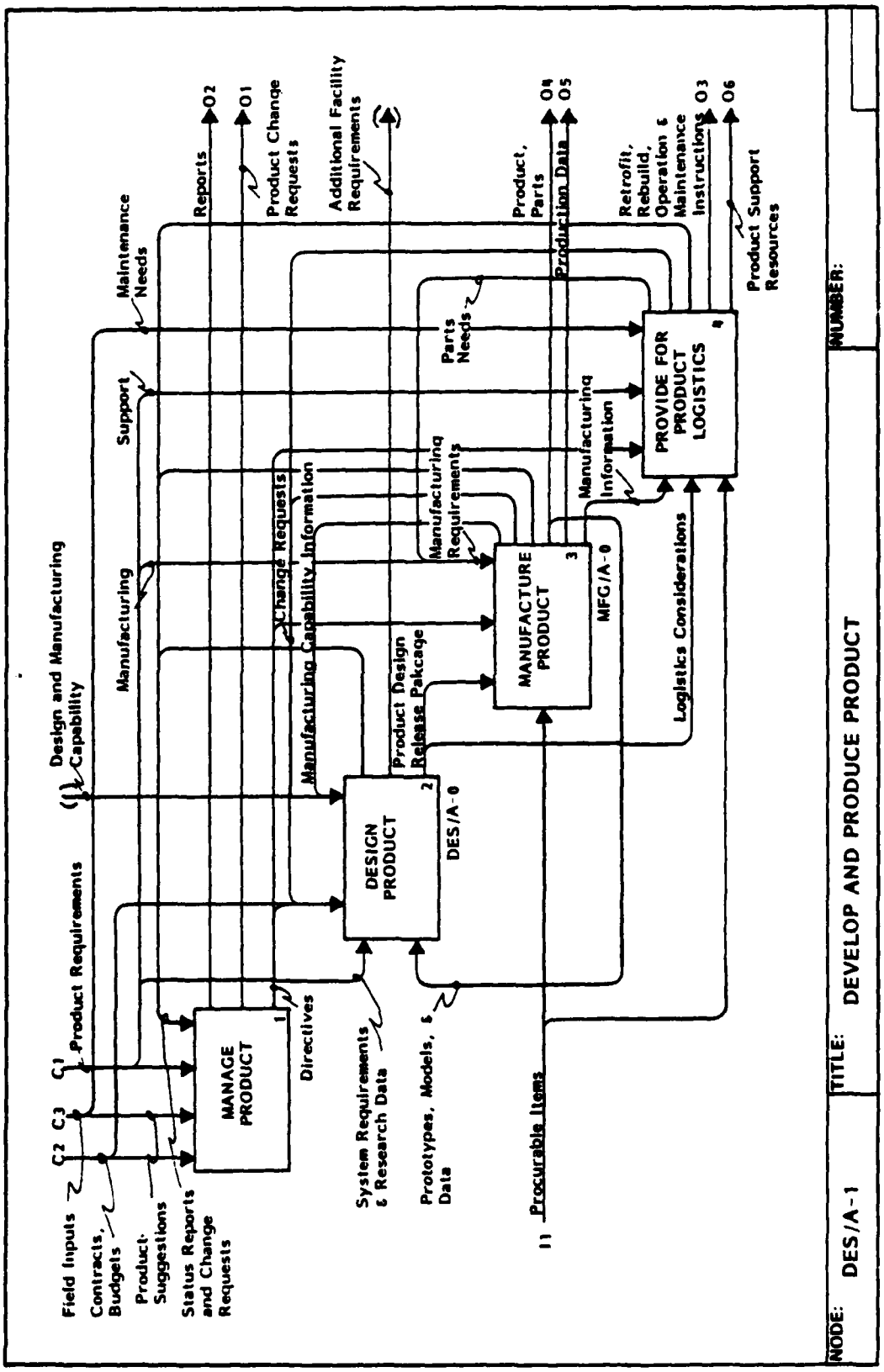
NODE: DES/A-1
TITLE: DEVELOP AND PRODUCE PRODUCT
NUMBER:
MANAGE PRODUCT
1
DESIGN PRODUCT
2
DES/A-0
MANUFACTURE PRODUCT
3
MFG/A-0
PROVIDE FOR PRODUCT LOGISTICS
4
C1
C2
C3
I1
Field Inputs
Contracts, Budgets
Product Suggestions
Status Reports and Change Requests
Product Requirements
Design and Manufacturing Capability
Maintenance Needs
Support
Manufacturing
Directives
System Requirements & Research Data
Prototypes, Models, & Data
Procurable Items
Reports
O2
O1
Product Change Requests
Additional Facility Requirements
Change Requests
Manufacturing Capability Information
Product Design Release Pakcage
Manufacturing Requirements
Parts Needs
Manufacturing Information
Logistics Considerations
Product, Parts
O4
O5
Production Data
Retrofit, Rebuild, Operation & Maintenance Instructions
O3
O6
Product Support Resources

(A-1 Glossary Continued)

Field Inputs

See A-2 Glossary.

Product Suggestions

The suggestions for improvements in the product or documentation arising from its use or maintenance.

Product Requirements/Product Change Requests

The Control (product requirements) See A-2 Glossary. The Output (product change requests) may include unsolicited proposals for major changes to the product as well as requests to make minor changes in the specifications of the product.

Design and Manufacturing Capability/ Additional Facility Requirements

The Control (design and manufacturing capability) consists of the intellect and resources which represent the potential of a Corporate entity to develop and produce a product; it includes design/manufacturing knowledge (allowables, standards, methodology, tools, etc.), people, design/manufacturing facilities, laboratories, computers, and other resources. The Output (additional facility requirements) consists of the identification of necessary resources (facilities, equipment, tools, people, etc.) beyond those currently available to manufacture the product.

Product Design Release Package/ Change Requests

The Output (product design release package) consists of all drawings, graphics, specifications, and supporting data by which Design Engineering defines the end-item product for manufacturing. The Input (change requests) consists of any unsolicited proposals or recommendations for altering or improving the designed product.

Status Reports

Define progress problems, accomplishments, and plans on assigned tasks for all engineering disciplines to maintain coordination and communication of effort.

Directives/Reports and Change Requests

The Control (directives) consists of design directives, which represent Corporate guidelines and criteria in the design and selection of product lines, as well as information on the statement of work, program control, system requirements, and product requirements. The Output (reports and change requests) - See A-2 Glossary.

System Requirements and Research Data

The total requirements for the product, its use, and its maintenance; including analyses, methods, and concepts information.

Prototypes, Models, Data

The first manufactured (pre-production) products, and their quantitative data against which the design requirements can be verified; static, dynamic, test, and operating models and mock-ups; with all supporting functional and operational test computations, documentations, and recommendations indicative of the need for further testing to meet the requirements for stability, control, drag characteristics, surface hinge moments, and pressure distribution.

Logistics Considerations

Considerations regarding the procuring, maintaining, and transporting of the material, people, and facilities associated with the product.

Manufacturing Information

Comprised of data on tools and fixtures, assembly and disassembly, and test results which may be useful in determining how to support the product.

A-0 DESIGN PRODUCT

Diagram A-0 corresponds to Box 2 of Diagram A-1; except, it is separated from all the rest of that diagram to emphasize its inputs, controls, and outputs. The monolithic content of this activity is expanded and expounded in the next diagram, A0.

An A-0 diagram has been likened to the trunk of a tree, and all the succeeding diagrams as its branches, unfolding to display the detailed complexity of design. The preceding diagrams (A-3, A-2, and A-1) are the roots of the tree, establishing the complex environment in which design resides.

This activity (Design Product) is responsible for the conception, final design, refinement, and test of the product before its release to Manufacturing. Moreover, it provides the characteristics, criteria, and other properties, including cost, which define the product baseline. Other tasks include handling changes required to the product design and providing field support in the light of logistics considerations.

The inputs, controls, and outputs for this activity have been defined in the glossaries of the preceding diagrams.

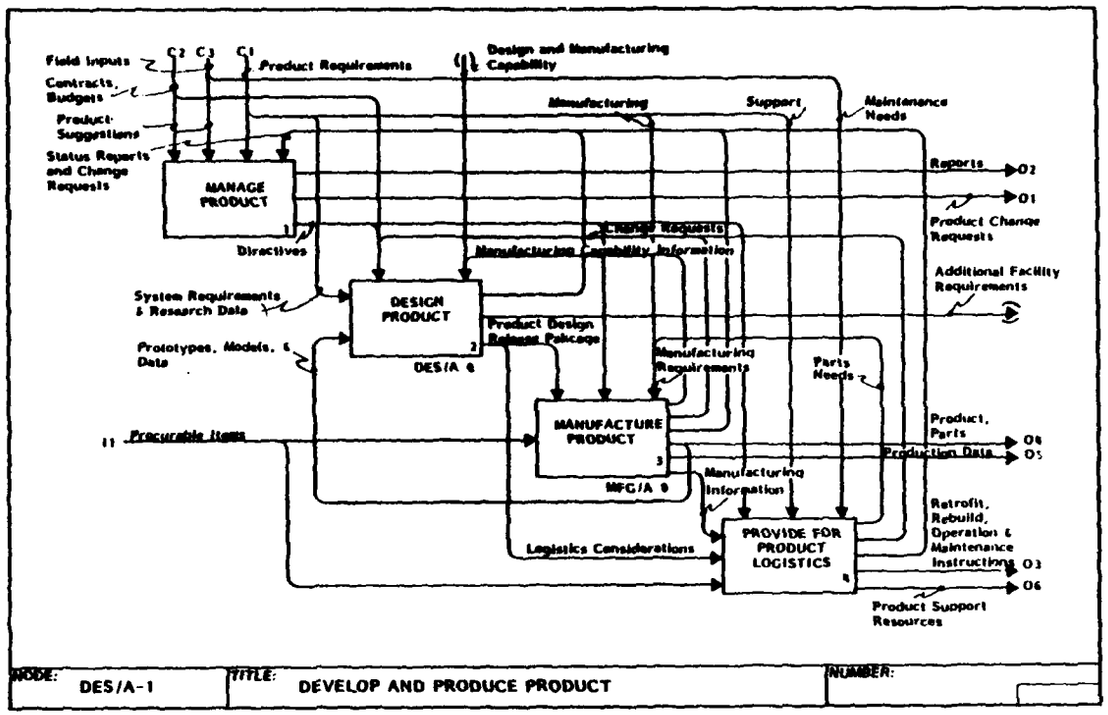

Glossary

Systems Requirements and Research Data

The total requirements for the product, its use, and its maintenance; including analyses, methods, and concepts information.

Prototypes, Models, Data

The first manufactured (pre-production) products, and their quantitative data against which the design requirements can be verified; static, dynamic, test, and operating models and mock-ups; with all supporting functional and operational test computations, documentations, and recommendations indicative of the need for further testing to meet the requirements for stability, control, drag characteristics, surface hinge moments, and pressure distribution.

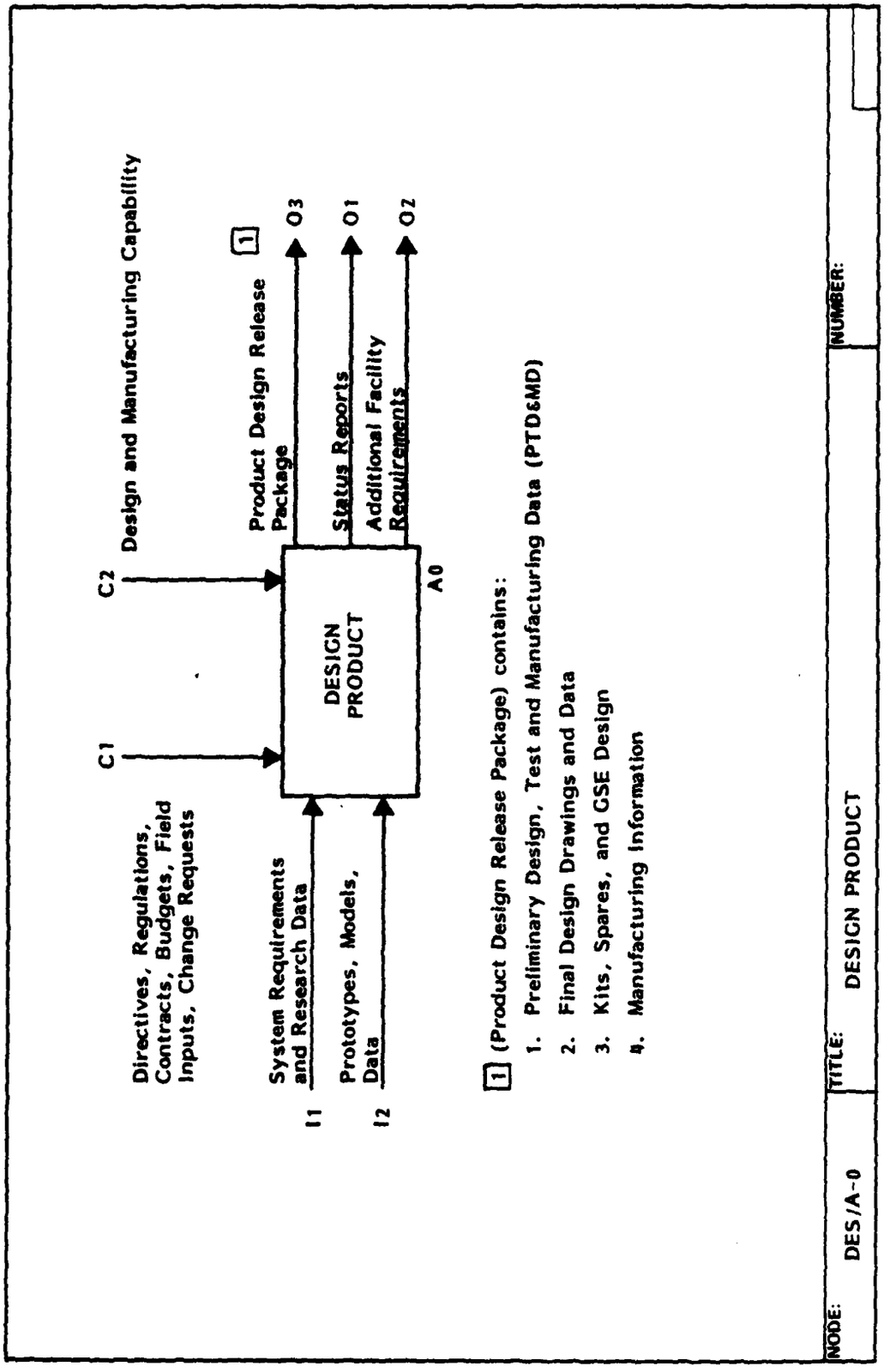
C1
Directives, Regulations, Contracts, Budgets, Field Inputs, Change Requests
C2
Design and Manufacturing Capability
I1
System Requirements and Research Data
I2
Prototypes, Models, Data
DESIGN PRODUCT
A0
Product Design Release Package
1
O3
Status Reports
O1
Additional Facility Requirements
O2
1 (Product Design Release Package) contains:
1. Preliminary Design, Test and Manufacturing Data (PTD&MD)
2. Final Design Drawings and Data
3. Kits, Spares, and GSE Design
4. Manufacturing Information
NODE:
DES/A-0
TITLE:
DESIGN PRODUCT
NUMBER:

(A-0 Glossary Continued)

Directives/Reports and Change Requests

The Control (directives) consists of design directives, which represent Corporate guidelines and criteria in the design and selection of product lines, as well as information on the statement of work, program control, system requirements, and product requirements. The Output (reports) consists of reports of satisfaction of (or problems in satisfying) the contracts. The Output (change requests) is composed of all requests to alter the product, or any component of the product, in any way. The change requests include the subtlest alterations such as surface finishes, to the most fundamental changes involving the basic configuration.

Design and Manufacturing Capability/ Additional Facility Requirements

The Control (design and manufacturing capability) consists of the intellect and resources which represent the potential of a Corporate entity to develop and produce a product; it includes design/manufacturing knowledge (allowables, standards, methodology, tools, etc.), people, design/manufacturing facilities, laboratories, computers, and other resources. The Output (additional facility requirements) consists of the identification of necessary resources (facilities, equipment, tools, people, etc.) beyond those currently available to manufacture the product.

Product Design Release Package

The Output (product design release package) consists of all drawings, graphics, specifications, and supporting data by which Design Engineering defines the end-item product for manufacturing.

Status Reports

Define progress problems, accomplishments, and plans on assigned tasks for all engineering disciplines to maintain coordination and communication of effort.

A0 DESIGN PRODUCT

Diagram A0 is the source diagram from which all subsequent diagrams in the Architecture of Design arise. It has the same inputs, controls (although C1 has been unbundled), and outputs as does the single box Diagram A-0.

The Product Design activity is comprised of three major areas into which the activity can be divided—conceptual, preliminary, and detail design.

Box 1 – The formulation of concepts is based on customer/mission requirements, basic research data, and exploratory and advanced development programs; and, candidate configurations are chosen for possible Preliminary Design development.

Box 2 – Initiated with the definition of several candidate configurations that are all able to meet the program technical objectives, it is not started until feasible concepts have been defined to a degree that the resulting design requirements baseline constrains the scope of the subsequent engineering efforts. The activity involves applying more advanced analytical methods to the design problem in order to build confidence in the final selected design.

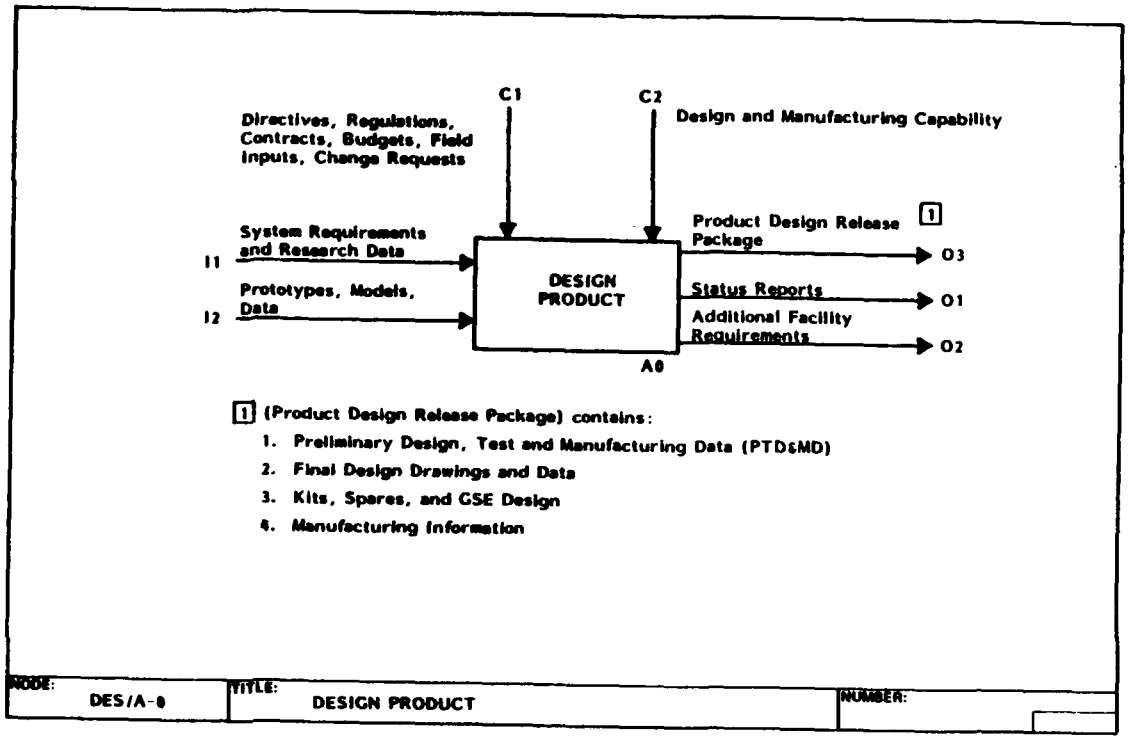

Box 3 – Every detail part, assembly, and subassembly is defined in its entirety. This activity occurs when the Preliminary Designs have explored representative design areas to a depth where there are no significant problems, mysteries, or voids remaining; and, when the risk of design change is small and the market prospects are high, Management decides on the "go ahead", and the product detail design commences.

Glossary

Contracts

Information which directs an organization/Corporation to perform its job.

Directives and Budgets

Directives consist of design directives, which represent Corporate guidelines and criteria in the design and selection of

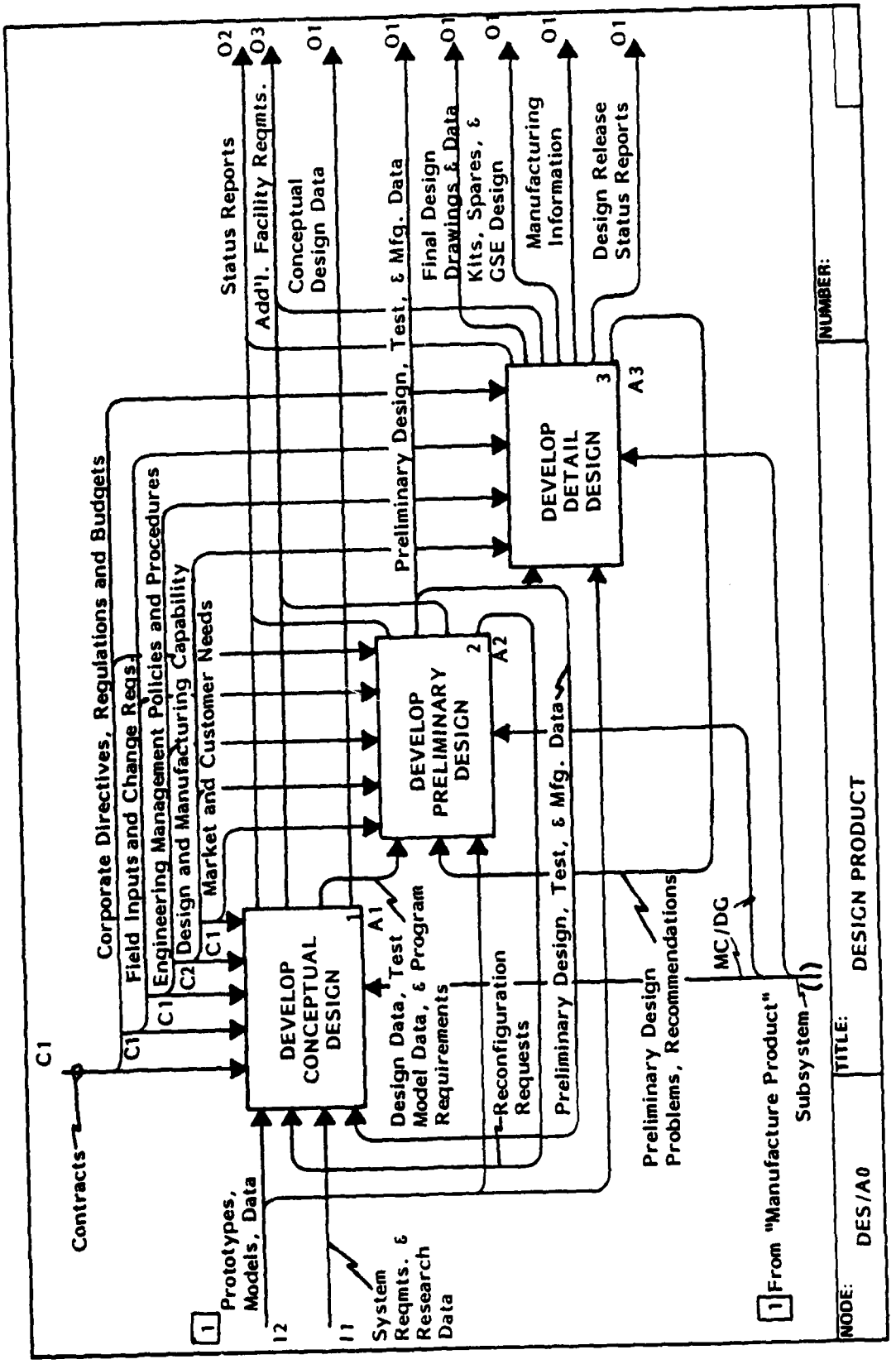
Corporate Directives, Regulations and Budgets
Field Inputs and Change Reqs.
Engineering Management Policies and Procedures
Design and Manufacturing Capability
Market and Customer Needs
C1
C1
C2
C1
C1
Contracts
Prototypes, Models, Data
I2
I1
System Reqmts. & Research Data
DEVELOP CONCEPTUAL DESIGN
1
A1
Design Data, Test Model Data, & Program Requirements
DEVELOP PRELIMINARY DESIGN
2
A2
Reconfiguration Requests
Preliminary Design, Test, & Mfg. Data
DEVELOP DETAIL DESIGN
3
A3
Preliminary Design Problems, Recommendations
MC/DG
From "Manufacture Product" Subsystem
Status Reports
Add'l. Facility Reqmts.
Conceptual Design Data
Preliminary Design, Test, & Mfg. Data
Final Design Drawings & Data
Kits, Spares, & GSE Design
Manufacturing Information
Design Release Status Reports
O2
O3
O1
O1
O1
O1
O1
O1
NUMBER:
TITLE:
DESIGN PRODUCT
NODE:
DES/A0

(A0 Glossary Continued)

product lines, as well as information on the statement of work, program control, system requirements, and product requirements. Budgets depict the allocations of the workforce and schedules.

Market and Customer Needs

Intelligence dealing with the customer's desires as well as the competition's plan and progress.

Field Inputs and Change Requests/ Reports and Change Requests

The Control (field inputs and change requests) is defined as follows: Field inputs are the suggestions for improvements in the product or documentation arising from its use or maintenance. In addition, they also include the need for parts or materials for maintenance. Change requests are composed of all requests to alter the product, or any component of the product, in any way. The change requests include the subtlest alterations such as surface finishes, to the most fundamental changes involving the configuration. The Output (reports) consists of reports of satisfaction of (or problems in satisfying) the contracts.

Conceptual Design Data

Configuration information provided to Manufacturing in order to test hardware, new materials, and models.

Design Data, Test Model Data, and Program Requirements/Reconfiguration Requests

The Output (design data, test model data, and program requirements) is defined as follows: Design data consists of the basic parameters of the product and its conceptual configuration; test model data is comprised of analytical information derived from the testing of models; program requirements represent selected candidate configurations from several alternate concepts. The program requirements' baseline evolves as a result of the selection process to arrive at an optimum configuration. The Input (reconfiguration requests) is a feedback from the Preliminary Design to the Conceptual Design for reconfiguration based on additional data.

Preliminary Design, Test, and Manufacturing Data/Recommendations

The Output (preliminary design, test, and manufacturing data) is defined as follows: Preliminary design data is the Detail Design requirements' baseline for the selected configuration. It represents the definition of external lines, subsystem equipment layouts, schematics, structural arrangements, and technical discipline analyses. (The technical disciplines provide design requirements in structural dynamics, human factors, reliability, materials, and maintainability; preliminary test data is information on testing requirements for the designed product; preliminary manufacturing data defines the volume and schedule that will be imposed on Manufacturing. In addition, it includes advance information on fabrication, assembly, material, and tooling requirements. The Input (recommendations) is a feedback from the Detail Design to the Preliminary Design for the reevaluation and/or redesign of critical design areas based on additional data.

Detail Design Data

Comprised of drawings and information complete enough and in such detail that any parts made by any Manufacturer will be physically, functionally, and structurally interchangeable within the limits/ tolerances set forth in the data. In addition, integrating logistics support information is included.

A1 DEVELOP CONCEPTUAL DESIGN

Box 1 – Specified research is conducted, and the results which include the research data, analysis information, new methods, concepts, and theoretical models are utilized in box 2.

Box 2 – Ascertains customer needs, determines technical feasibility for the implemention of concepts and identification of constraints, and focuses on the financial possiblities and practicalities of the purchaser's requirements. If there are possibilities for further applications of the product design, addtional research would be required.

Box 3 – Transforms the customer requirements and management decisions, reconfiguration requests, and information from prototypes, models, preliminary design, test results, and manufacturing into geometry. The geometry and associated analytical data are used to formulate and define alternate concepts and individual configuration development data which are sent to technical disciplines for each concept. If the information from Box 2 is incomplete or unclear, there is a feedback to reanalyze the customer requirements.

Box 4 – Uses the formulated concepts, test results, and some of the above-

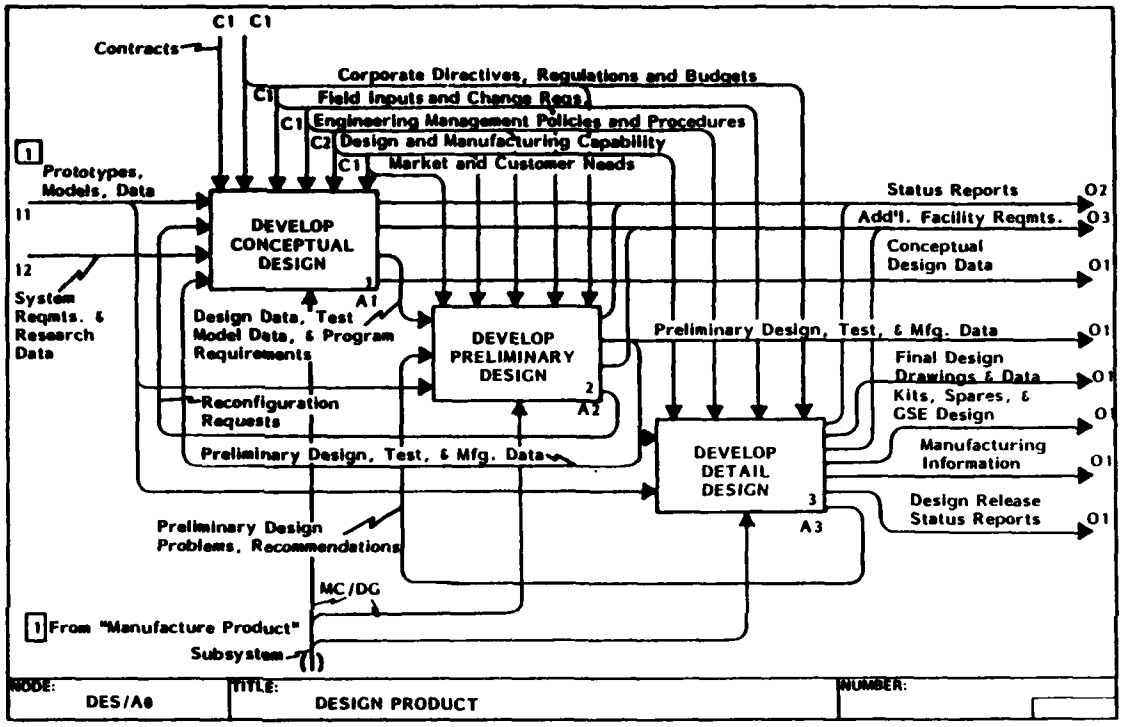

mentioned information in Box 3 to choose the best configurations for possible preliminary design. This selection process entails the assigning of relative merits to the candidate configuration, performing trade-off studies based on life-cycle costs, comparing performance predictions with the requirements ranking like parameters of each design, and documenting information covering all of the available considerations. The end product includes the program requirements' baseline. There is a feedback to Box 3 if more concept information is needed.

Glossary

System Requirements and Research Data

The total requirements for the product, its use, and its maintenance; including analyses, methods, and concepts information composed of basic (scientific and technical) research information, explor-

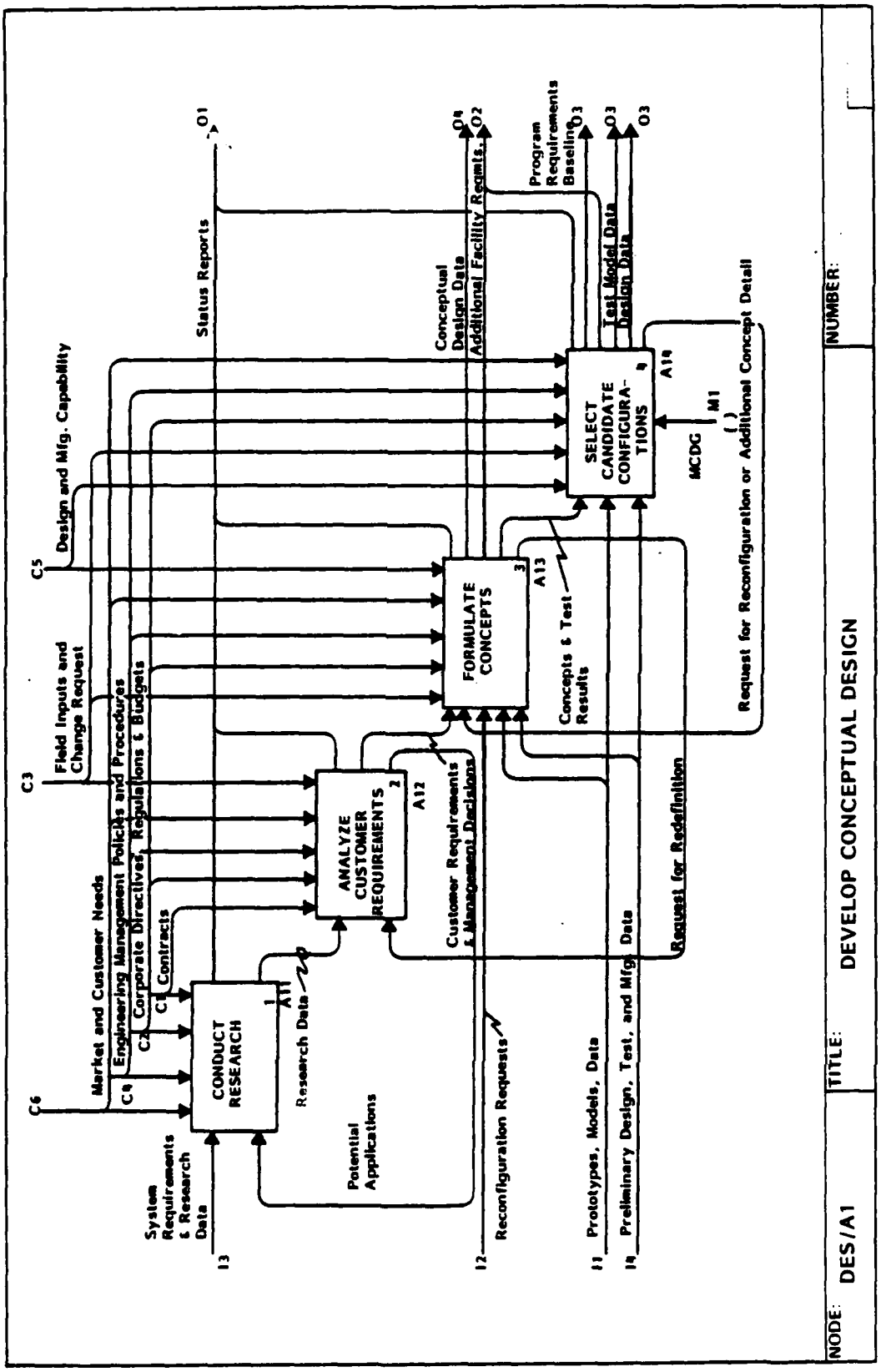
NODE: DES/A1
TITLE: DEVELOP CONCEPTUAL DESIGN
NUMBER:
CONDUCT RESEARCH
1
A11
ANALYZE CUSTOMER REQUIREMENTS
2
A12
FORMULATE CONCEPTS
3
A13
SELECT CANDIDATE CONFIGURA-TIONS
4
A14
C1 Contracts
C2 Corporate Directives, Regulations & Budgets
C4 Engineering Management Policies and Procedures
Market and Customer Needs
C6
C3
Field Inputs and Change Request
C5
Design and Mfg. Capability
I3 System Requirements & Research Data
Research Data
Potential Applications
O1 Status Reports
I2 Reconfiguration Requests
Customer Requirements & Management Decisions
Conceptual Design Data
O4 Additional Facility Reqmts.
O2
Concepts & Test Results
I1 Prototypes, Models, Data
I4 Preliminary Design, Test, and Mfg. Data
Request for Redefinition
Request for Reconfiguration or Additional Concept Detail
Program Requirements Baseline
O3
Test Model Data
Design Data
O3
O3
MCDG
M1
( )
( )

(A1 Glossary Continued)

atory development information, and advance development information.

Research Data/Potential Applications

(research data – see above) Potential applications represent identification of new applications and technology uncovered during the analysis of customer requirements. They then become candidates for further research.

Customer Requirements and Management Decisions/Request for Redefinition

(customer requirements) define the purchaser's need for the product as well as its use and maintenance; (management decisions) based on both technical and economic feasibility, resulting in a response to the customer. The reciprocal data flow (request for redefinition) further analyzes customer requirements based on additional data derived during the formulation of concepts.

Concepts and Test Results/Request for Reconfiguration or Additional Concept Detail

(concepts and test results) represent alternate configurations, e.g., individual loft and development data for each configuration; and includes test model analytical data and related test results which support the concepts, such as new materials and processes. The reciprocal data flow (request for reconfiguration or additional concept detail) contains additional data derived during the selection of the candidate configuration; the information is used to modify the formulated concepts.

A11 CONDUCT RESEARCH

Box 1 – System requirements and potential applications are applied to conduct scientific and technical research to support the advancement of the state-of-the-art of the design and analysis process. The research in the technical areas of the design environment is on a continuing basis in the pursuit of long-term goals established by Management. The outcome, basic research data, is used by box 2.

Box 2 – Conducts exploratory development to develop detail application capability. If a request for specific research is made, additonal basic research is performed.

Box 3 – Applies the exploratory research data from box 2 to develop information and processes within specific disciplines. There is a feedback to box 2 if more exploratory research is needed.

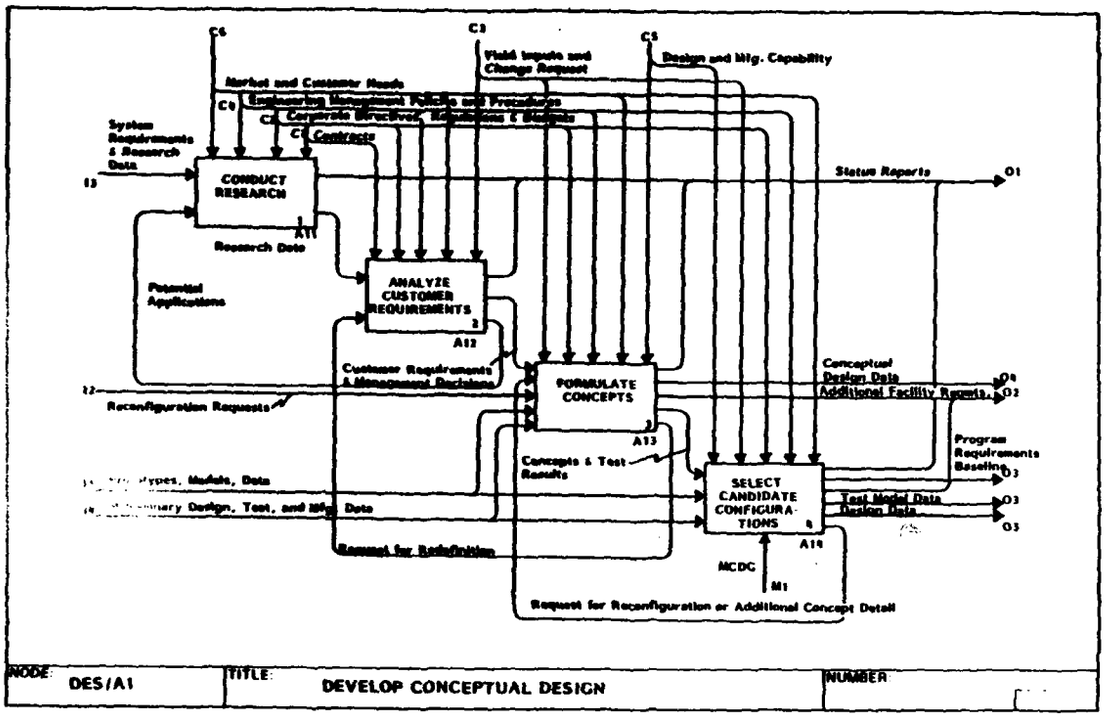

Glossary

Engineering Management Policies and Procedures

Established policies, procedures, operations management, planning and control, etc., as part of Corporate Management. They also include design review and drawing check procedures.

Corporate Directives, Regulations and Budgets

(directives and budgets – See Diagram A0 Glossary) Regulations are comprised of federal, commercial, and military regulations, as well as local and Corporate rules.

Basic Research Data

Consists of pure scientific and technical research information with less emphasis on applications. The intent is to support the advancement of the state-of-the-art of the design and analysis process.

Exploratory Research Data

Represents the application and capability of research candidates, such as new materials and manufacturing processes.

FTR110410000U
8 September 1983

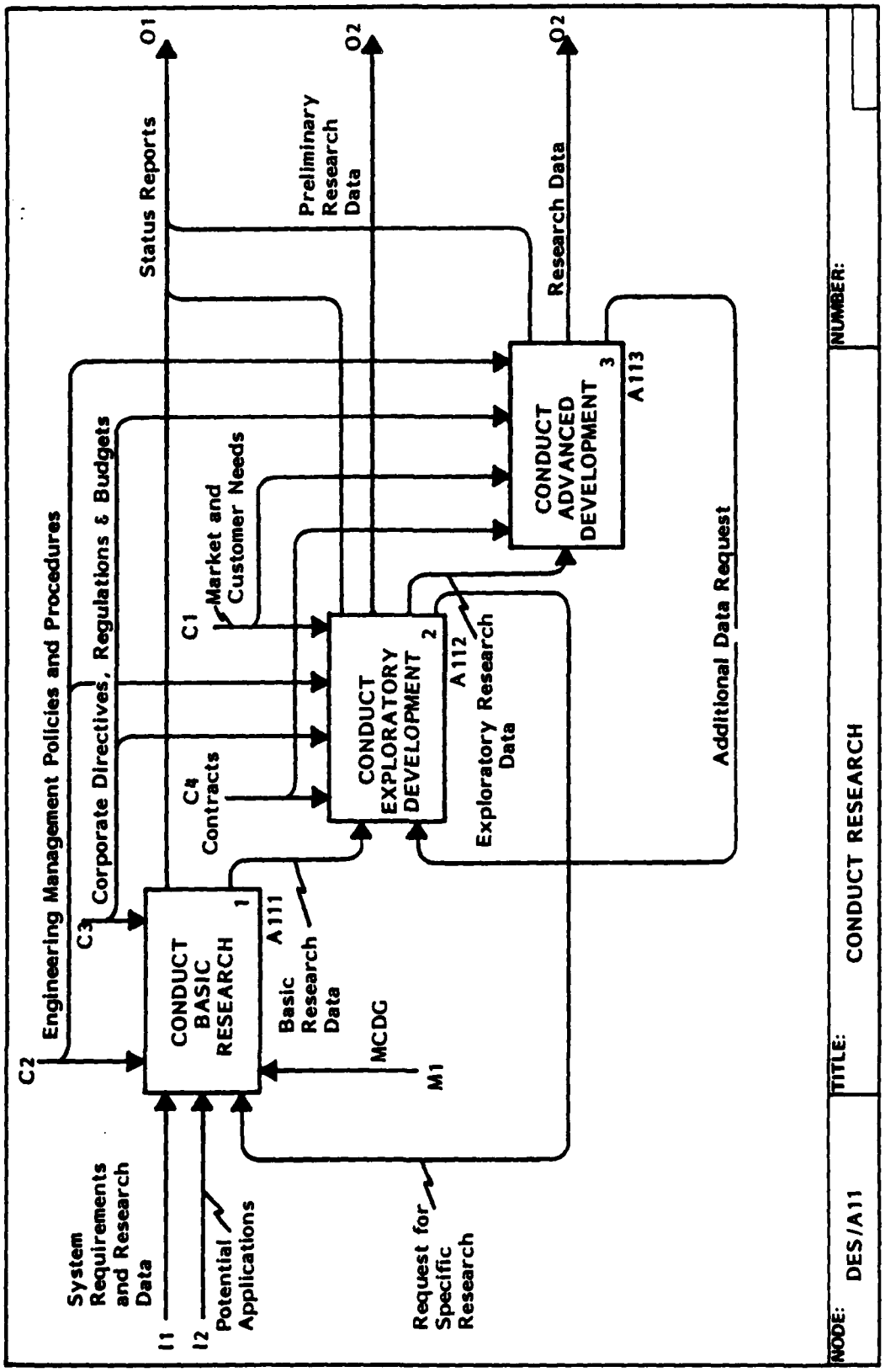
O1
Status Reports
O2
Preliminary Research Data
O2
Research Data
C1
Market and Customer Needs
C2
Engineering Management Policies and Procedures
C3
Corporate Directives, Regulations & Budgets
C4
Contracts
CONDUCT BASIC RESEARCH
1
CONDUCT EXPLORATORY DEVELOPMENT
2
CONDUCT ADVANCED DEVELOPMENT
3
A111
Basic Research Data
A112
Exploratory Research Data
A113
Additional Data Request
MCDG
M1
I1
System Requirements and Research Data
I2
Potential Applications
Request for Specific Research
NODE:
DES/A11
TITLE:
CONDUCT RESEARCH
NUMBER:

(A11 Glossary Continued)

Request for Specific Research

Request to perform in-depth research in light of additional information available.

Additional Data Request

Request for more exploratory development research information.

A111 CONDUCT BASIC RESEARCH

Box 1 – Potential applications, system requirements and research data, and requests for specific research are used to identify the information needed in order to perform the particular investigation required.

Box 2 – Utilizes the system requirements and research data depending upon the data needs from box 1 to gather and examine in detail the research information in order to perform the obligatory exploration.

Box 3 – Subject to data availability problems, this activity uses the results from Box 2 as well as other information and executes a systematic investigation to establish results or principles based on the specific requests. However, more data may be needed.

Box 4 – Employs the requests for specific research and the end product from Box 3 in order to make a synopsis of the completed research, including possibilities for further investigations into other areas.

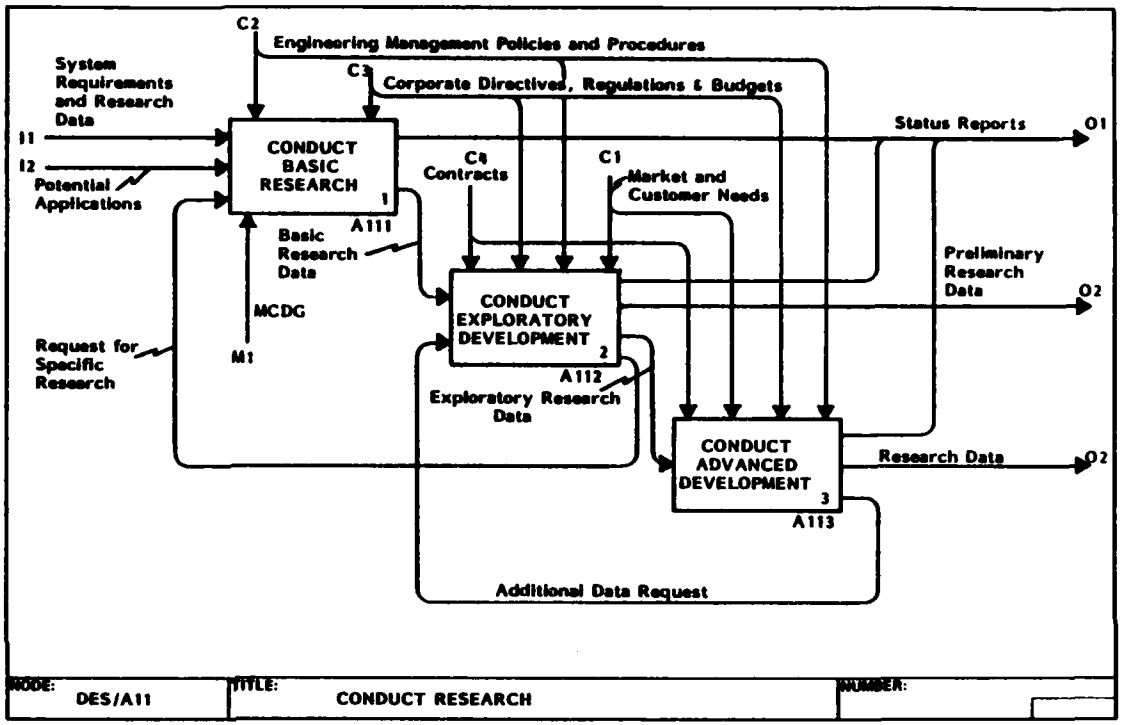

Glossary

Data Needs

The identified, required information used to perform the research.

Data Availability Problems

Problems in obtaining, when required, the necessary information.

Research Information

The collected and analyzed research data.

Research Results

The end products of the systematic investigation.

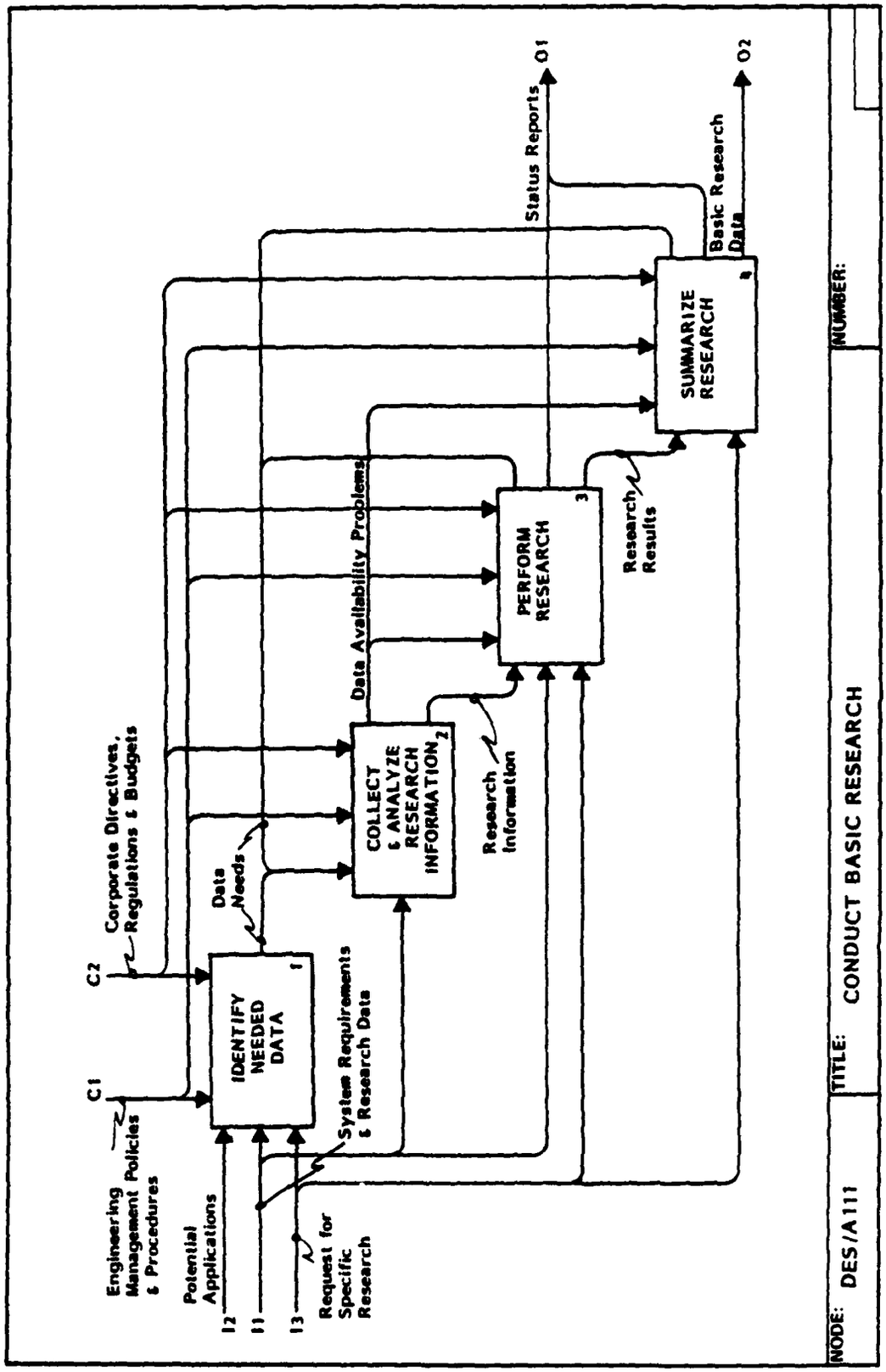
C1
C2
Engineering Management Policies & Procedures
Corporate Directives, Regulations & Budgets
Potential Applications
I2
I1
I3
Request for Specific Research
IDENTIFY NEEDED DATA
1
Data Needs
System Requirements & Research Data
COLLECT & ANALYZE RESEARCH INFORMATION
2
Data Availability Problems
Research Information
PERFORM RESEARCH
3
Research Results
SUMMARIZE RESEARCH
4
Status Reports
O1
Basic Research Data
O2
NODE: DES/A111
TITLE: CONDUCT BASIC RESEARCH
NUMBER:

A112 CONDUCT EXPLORATORY DEVELOPMENT

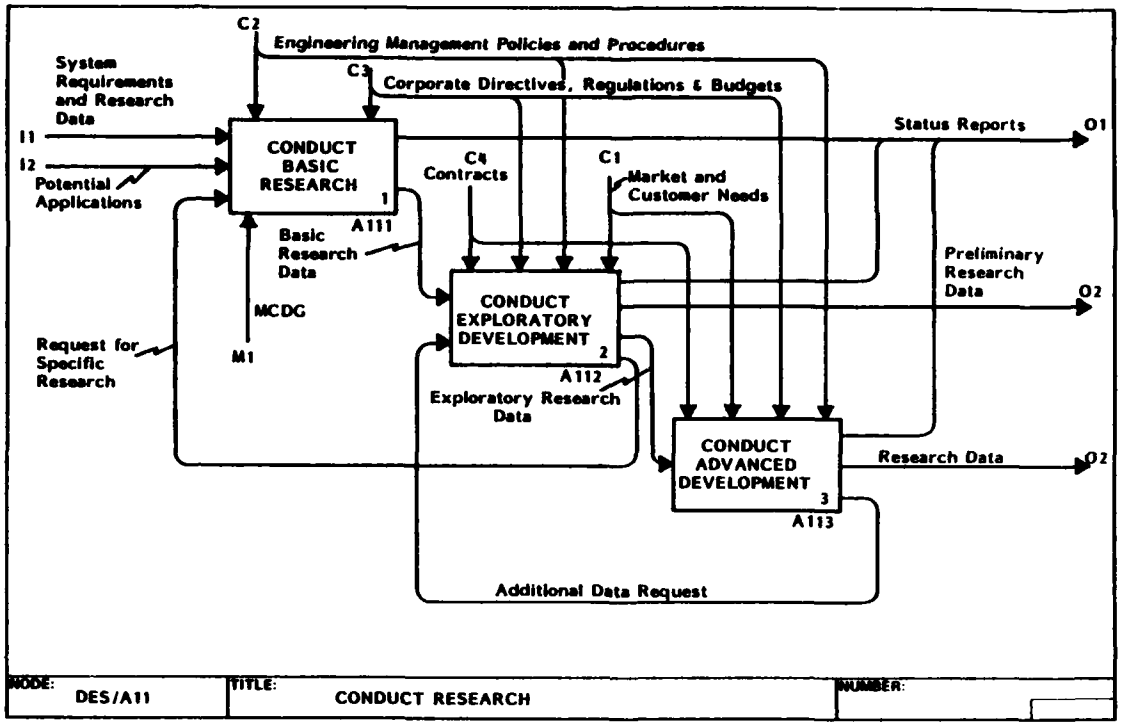

Box 1 – Market and customer needs are the primary drivers in arriving at geometrical data for design mission selection. Using basic research data, the vehicle geometry for several configurations which appear to answer market and customer needs, is developed and submitted as candidates for selecting a design mission. This data, while generally parametric for a whole vehicle, might be developed for a specific vehicle area (i.e. a wing, a propulsion, etc.) as requested additional data. Engineering Management's policies and procedures, corporate regulations and budgets, and contracts direct and control the geometrical investigations.

Box 2 – There are many systems to be developed, some are unique while others involve or encompass portions of systems of other disciplines. For example, the propulsion system is complex and involves: hydraulics, thermodynamics, aerodynamics, electronics, structures, kinematics, acoustics, pneumatics, pyrotechnics, materials, etc. The development of each system involves defining the development task, determining and gathering the data and equipment needed to perform the develoment, and then proceeding to develop the system required. One system's development may involve only sketches and layouts to arrive at an acceptable conclusion while another system's development would require layouts drawings, mock ups, modules, and testing before a configuration is accepted. At this design level, system development results are parametric in function, capacity, and envelope.

Box 3 – There is a continuous search for new materials and processes for building products. Some searches have a definite goal; while, some have a goal area. Metals, rubbers, and plastics are under constant improvement to fit new required environments. Lighter, stronger, and corrosive-proof materials are sought after. Protective and decorative coatings and sealants are invented or discovered and procedures to use them are developed. Material combinations are developed with extra strength against specific environ-

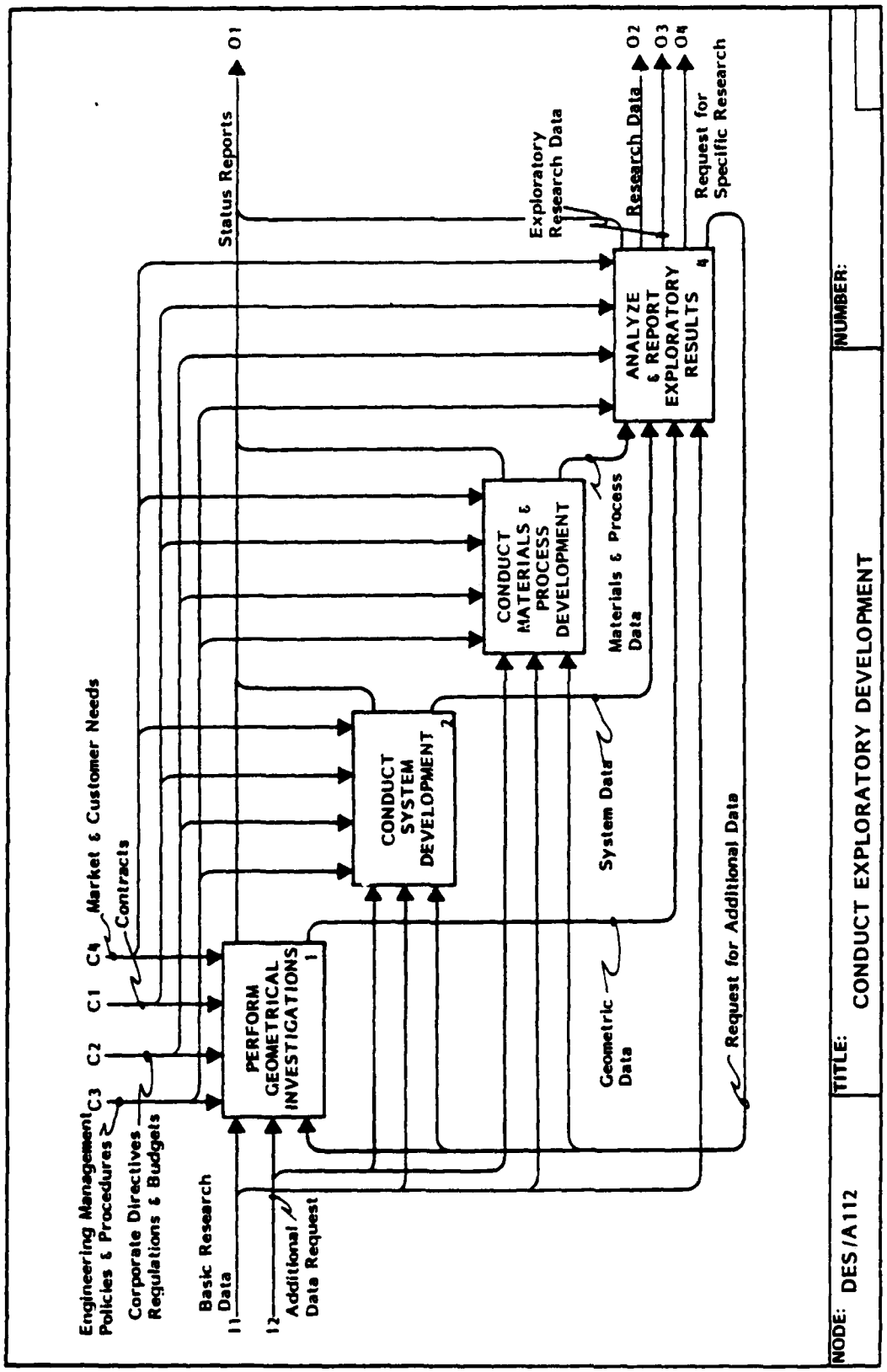
Engineering Management Policies & Procedures
C3
C2
C1
C4
Market & Customer Needs
Contracts
Corporate Directives Regulations & Budgets
Basic Research Data
I1
I2
Additional Data Request
PERFORM GEOMETRICAL INVESTIGATIONS
1
CONDUCT SYSTEM DEVELOPMENT
2
CONDUCT MATERIALS & PROCESS DEVELOPMENT
3
ANALYZE & REPORT EXPLORATORY RESULTS
4
Status Reports
O1
Exploratory Research Data
Research Data
O2
O3
O4
Request for Specific Research
Materials & Process Data
System Data
Geometric Data
Request for Additional Data
NODE: DES/A112
TITLE: CONDUCT EXPLORATORY DEVELOPMENT
NUMBER:

(A112 Continued)

ments (sandwich configurations – honeycomb, carbon filament) and the processes documented. Installation methods for fasteners are developed to produce the highest and most consistent joint strength.

Box 4 – The results of the exploratory developments are compiled into reports which are transmitted to the requestor and to the library or design data documentation for future use. The data reported may be interim, preliminary data, or completed final data. Status of the development is reported as required. In some instances, further exploratory activity is required for completion and is requested.

Glossary

Geometric Data

Includes parametric data of a complete vehicle – wing span, body length, tail height and may include more detailed information such as wing area, body volume if required.

System Data

Includes data defining any or all systems. The data consists of geometric descriptions, weight, and function values. The systems include aerodynamics, hydraulics, electrical, electronics, air conditioning, propulsion, fuels, passenger payloads, and structure.

Materials and Process Data

Specifics for metals, plastics, rubber, composites, laminates, fasteners, bonding materials, finishes, corrosion protection, weldings, castings, forgings, standards, bearings, etc., and the process for preparation, construction, installation, and maintenance.

Request for Additional Data

A request for additional data to complete a report of task.

A113 CONDUCT ADVANCED DEVELOPMENT

Box 1 – Exploratory research data is evaluated with respect to Company charters in order to determine the deficiencies in the current operational designs, the changing world situations, including political, economic, or ecological, the changing threat to survival, and the state-of-the-art technology breakthroughs. If one of the aforementioned conditions exists, an applied research project plan is developed. If it is deemed necessary, an additional data request is made.

Box 2 – Conducts the applied research studies as dictated by the research project plan from Box 1. The activity investigates the potential for further development. When applicable, additional information is requested.

Box 3 – Evaluates the study results from Box 1 to determine the value of pursuing the advanced development. The major end product is the research data.

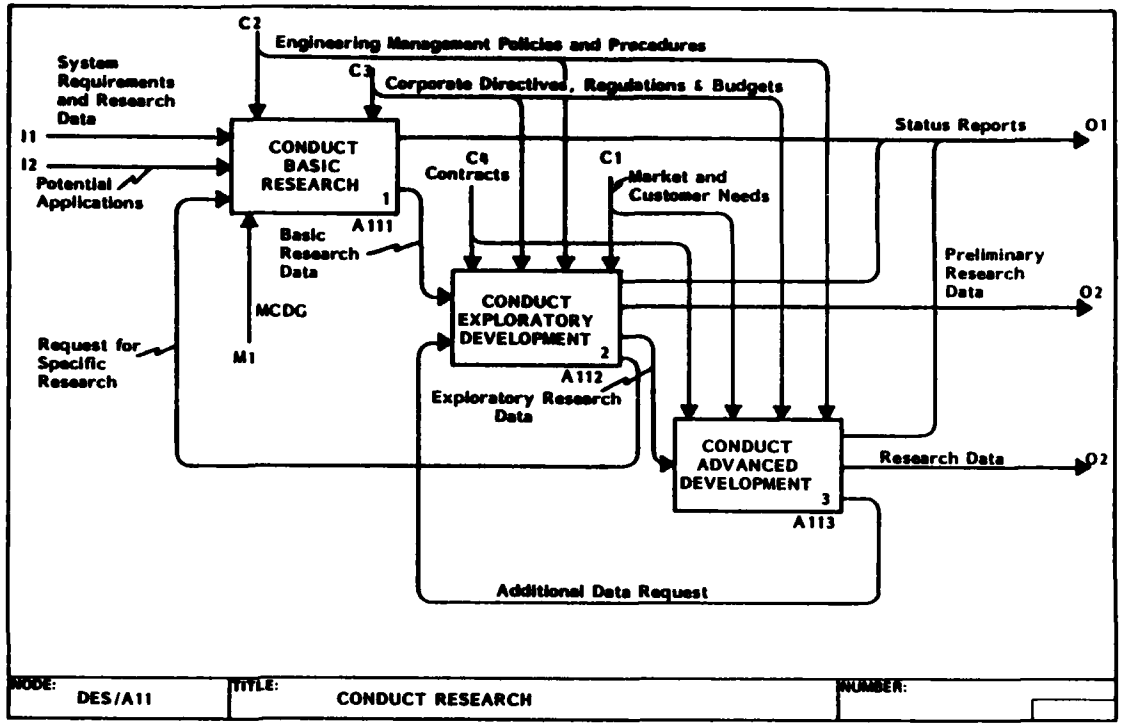

Study Results

The end products of the completed research examinations.

Glossary

Research Project Plan

Defines the objectives, goals, scope, and administrative constraints of each project considered for further development.

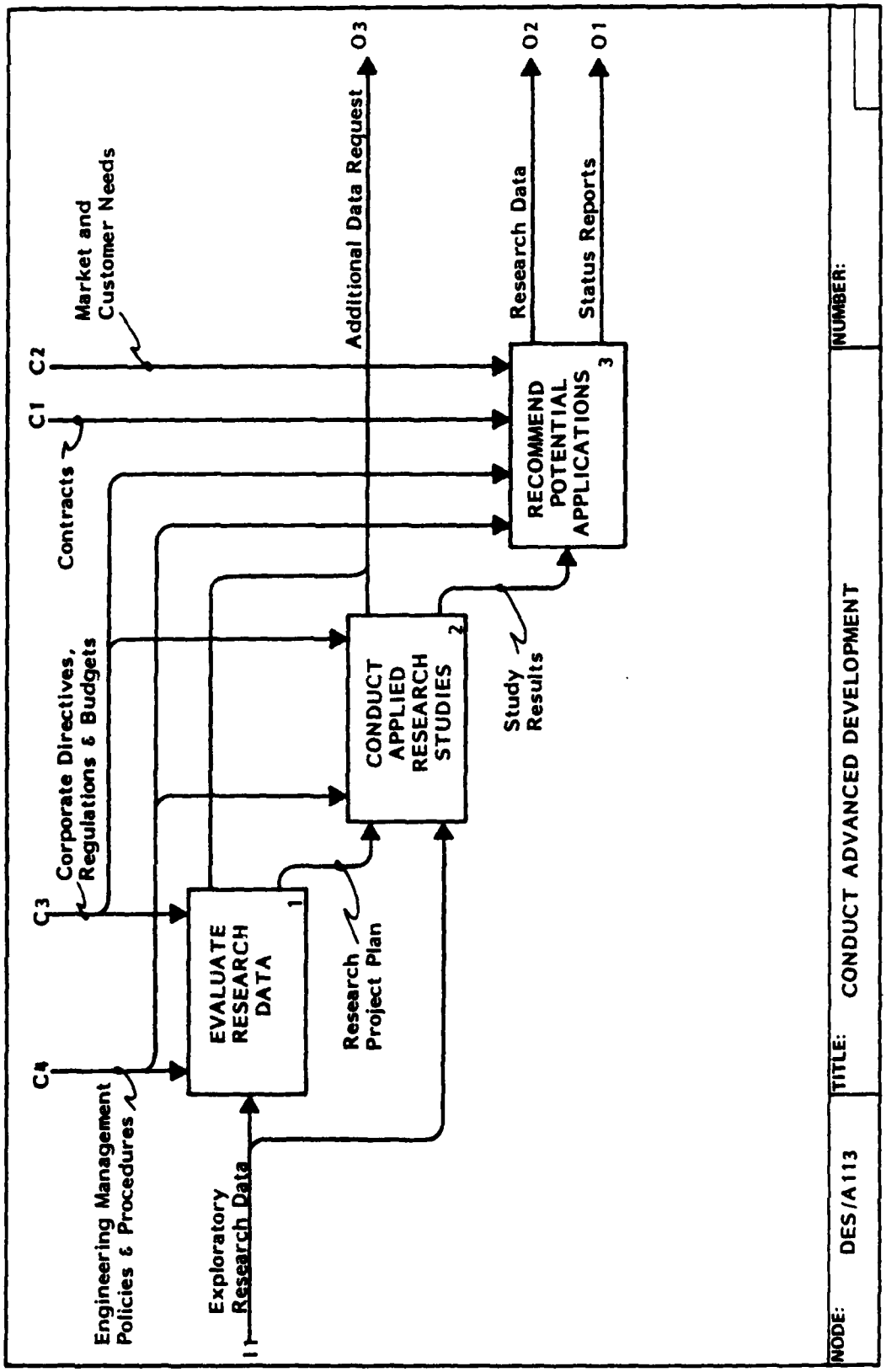
C4
Engineering Management Policies & Procedures
C3
Corporate Directives, Regulations & Budgets
C1
Contracts
C2
Market and Customer Needs
I1
Exploratory Research Data
EVALUATE RESEARCH DATA
1
Research Project Plan
CONDUCT APPLIED RESEARCH STUDIES
2
Additional Data Request
O3
Study Results
RECOMMEND POTENTIAL APPLICATIONS
3
Research Data
O2
Status Reports
O1
NODE:
DES/A113
TITLE:
CONDUCT ADVANCED DEVELOPMENT
NUMBER:

A12 ANALYZE CUSTOMER REQUIREMENTS

Box 1 – The combination of advanced development research data and requests for redefinition are applied in defining the desired requirements subject to contracts, field inputs and change requests, market and customer needs analyses, and Corporate directives and budgets. Variations to these requirements are also examined. The technical and economic feasibility impact (boxes 2 and 3, respectively) may entail the requirements either to be modified or completely redefined.

Box 2 – Uses the defined requirements from Box 1 to determine the technical feasibility of satisfying the customer's needs in light of government regulations, company design criteria, design standards and Corporate directives. The design objectives represent criteria for which a greater than minimum acceptability is desired and which the design process should strive to achieve to the degree of technical feasibility without compromising the achievement of the customer requirements and product cost objective.

Box 3 – Utilizes the construed requirements, technical feasibility and technical constraints in ascertaining economic feasibility. This is done by confirming that all necessary analyses and trade-off studies

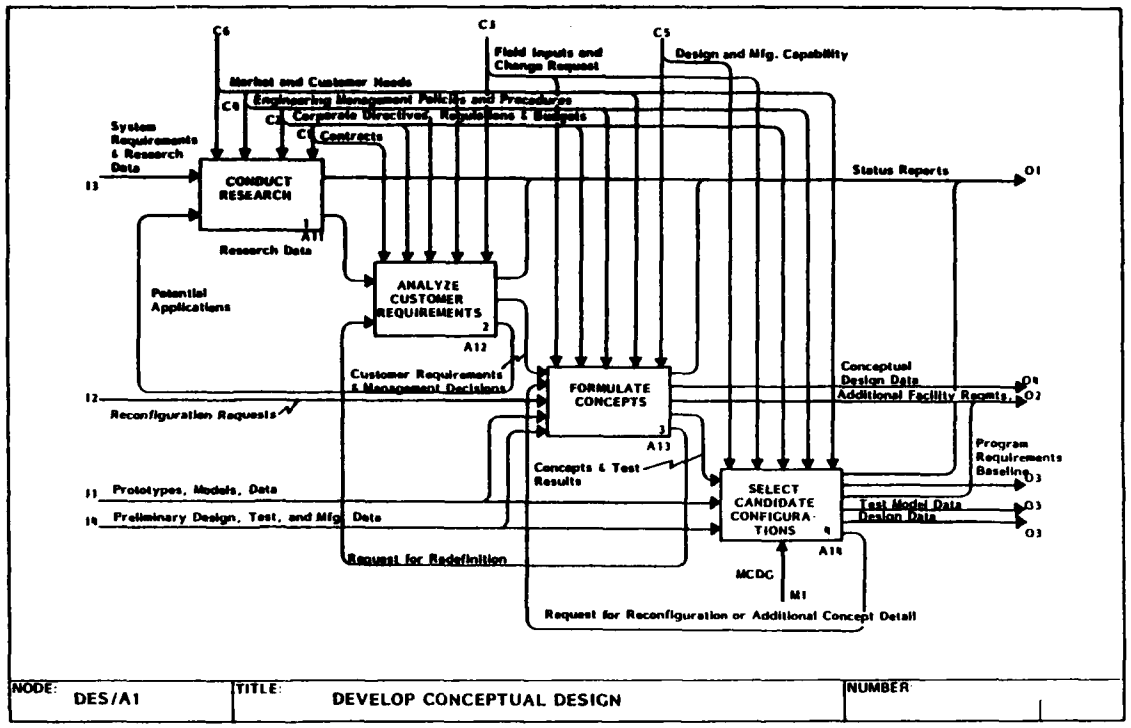

have been completed and that the results satisfy the Company's requirements to commit to the Conceptual Design phase.

Glossary

Technical Constraints

The constraints help define the criteria for which a greater than minimum acceptability is desired without compromising technical feasibility.

Technical Feasibility/Economic Impact

(technical feasibility) represents the assessment of customer requirements in view of the current state-of-the-art, government regulations, Corporate directives, and design standards; (economic impact) occurs as a result of trade-off studies performed downstream. The economic considerations are based on life cycle costs.

FTR110410000U
8 September 1983

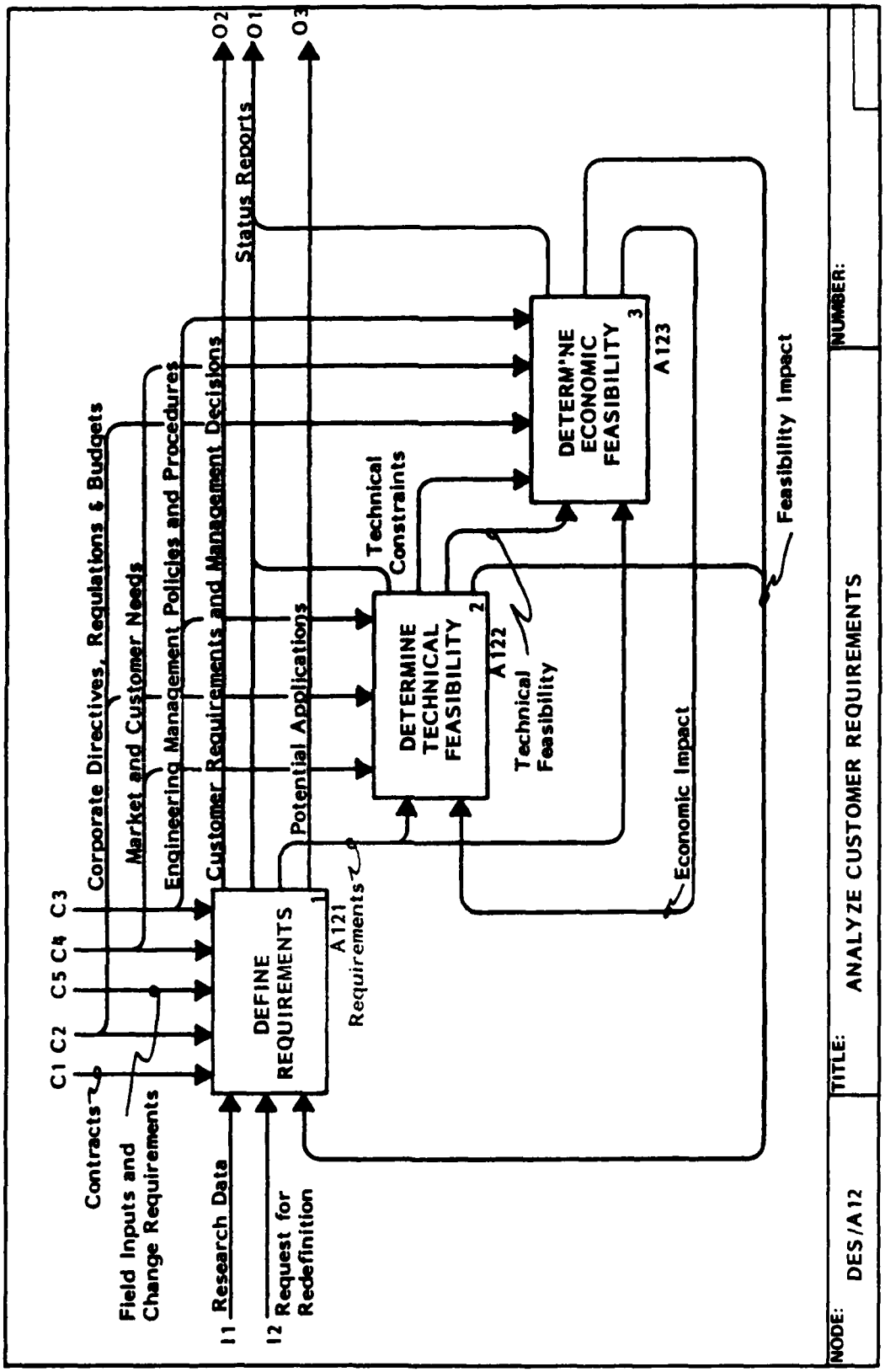
C1 C2
C5 C4
C3
Contracts
Field Inputs and Change Requirements
Corporate Directives, Regulations & Budgets
Market and Customer Needs
Engineering Management Policies and Procedures
Customer Requirements and Management Decisions
I1 Research Data
I2 Request for Redefinition
DEFINE REQUIREMENTS
1
A121
Requirements
Potential Applications
O2
O1
O3
Status Reports
DETERMINE TECHNICAL FEASIBILITY
2
A122
Technical Constraints
Technical Feasibility
DETERMINE ECONOMIC FEASIBILITY
3
A123
Economic Impact
Feasibility Impact
NODE: DES/A12
TITLE: ANALYZE CUSTOMER REQUIREMENTS
NUMBER:

(A12 Glossary Continued)

Requirements/Feasibility Impact

Represents desireable customer requirements as well as variations to them; feasibility impact includes both technical and economic considerations in the reevaluation and potential modification of the customer requirements.

A121 DEFINE REQUIREMENTS

Box 1 – Uses research data, requests for redefinition, and the feasibility impact in establishing performance objectives. Included in these objectives, imposed by market analyses and corporate directives, are mission, range, and payload requirements.

Box 2 – Utilizes the performance objectives from Box 1 as well as other information to evaluate variations on the objectives. These are requested directly by the customer and include direct operating cost and performance, dispatch reliability, and fatigue life.

Box 3 – Utilizes the performance objectives and their evaluated variations to state the requirements. Some of the results from this activity are potential applications and customer requirements and Management decisions. Requests for clarification and/or additional information are resolved in boxes 1 and 2.

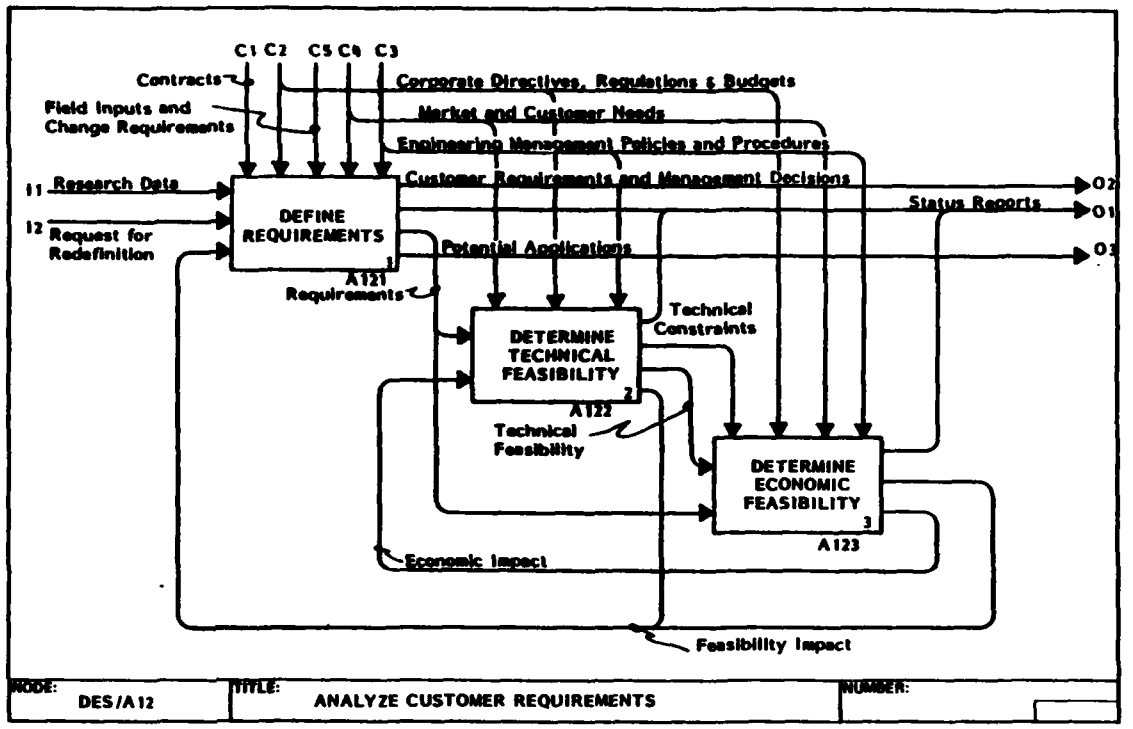

Glossary

Performance Objectives

Necessary design goals for the performance of the product.

Evaluated Variations

Appraised variations on the performance objectives.

Request for Clarification

Requests for clearer and more concise performance objectives in order to specify the requirements.

Request for Additional Data

Requests for supplementary information needed for the stated requirements.

FTR110410000U
8 September 1983

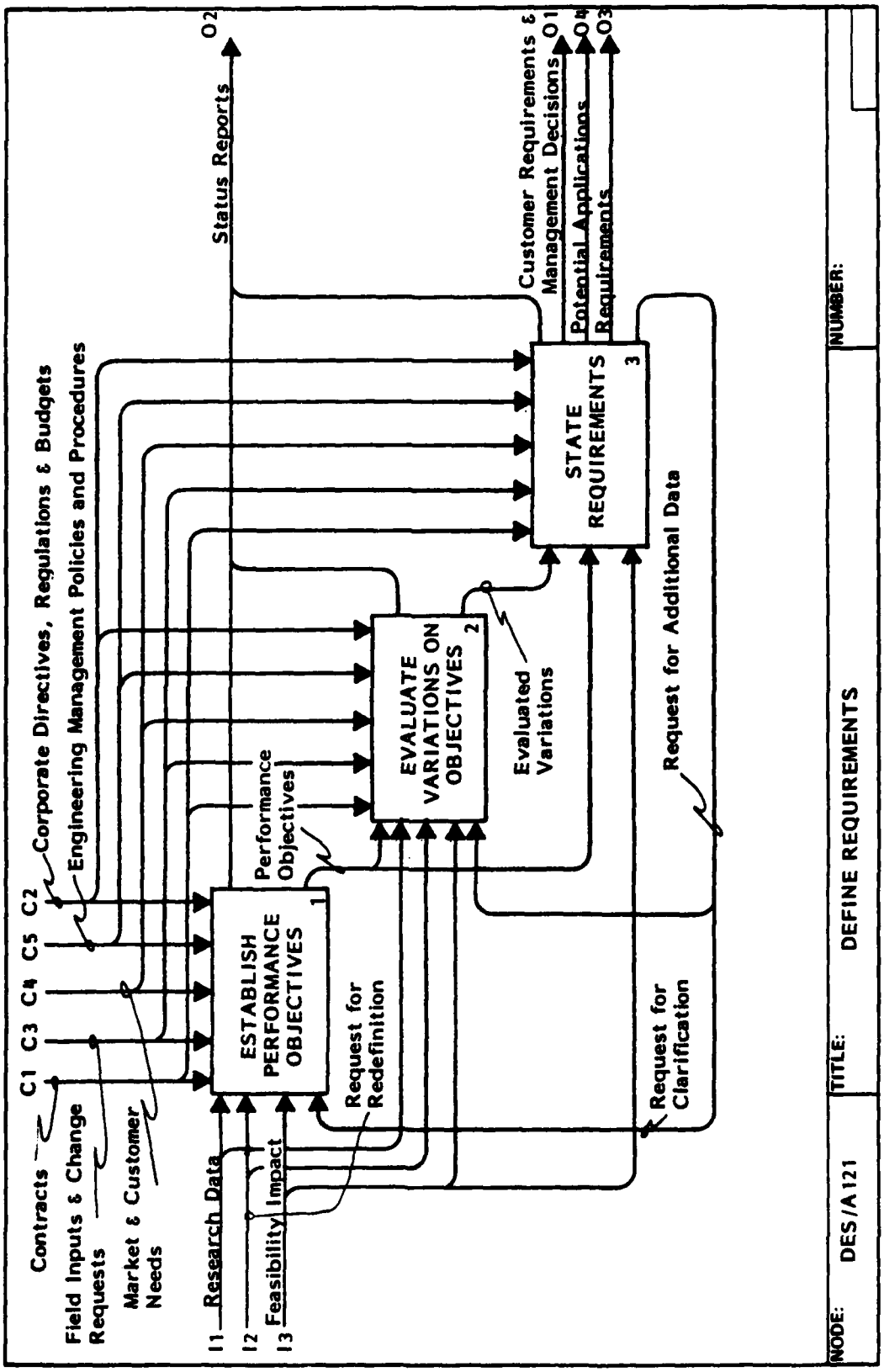
Contracts
C1 C3 C4 C5 C2
Field Inputs & Change Requests
Market & Customer Needs
Corporate Directives, Regulations & Budgets
Engineering Management Policies and Procedures
I1 Research Data
I2
I3 Feasibility Impact
ESTABLISH PERFORMANCE OBJECTIVES 1
Performance Objectives
Request for Redefinition
EVALUATE VARIATIONS ON OBJECTIVES 2
Evaluated Variations
STATE REQUIREMENTS 3
Request for Additional Data
Request for Clarification
Status Reports O2
Customer Requirements & Management Decisions O1
Potential Applications O4
Requirements O3
NODE: DES/A121
TITLE: DEFINE REQUIREMENTS
NUMBER:

A122 DETERMINE TECHNICAL FEASIBILITY

Box 1 – Uses the economic impact in clarifying and constructing the defined customer requirements.

Box 2 – Utilizes the interpreted requirements from Box 1 and compares them with the state-of-the-art, subject to its technology.

Box 3 – Employs the economic impact along with the available technology needs from Box 2 and appraises the appropriate technology needed for the product design. The activity is controlled by the state-of-the-art technology and technical constraints.

Box 4 – Applies the state-of-the-art technology, the economic impact, and the new technology needs from Box 2 in ascertaining the obtainability of new technology which has yet to be acquired by the Company.

Box 5 – Uses the evaluated applicable technology from Box 3, the new technology forecast from Box 4, and the economic impact to state the technical feasibility of the product design.

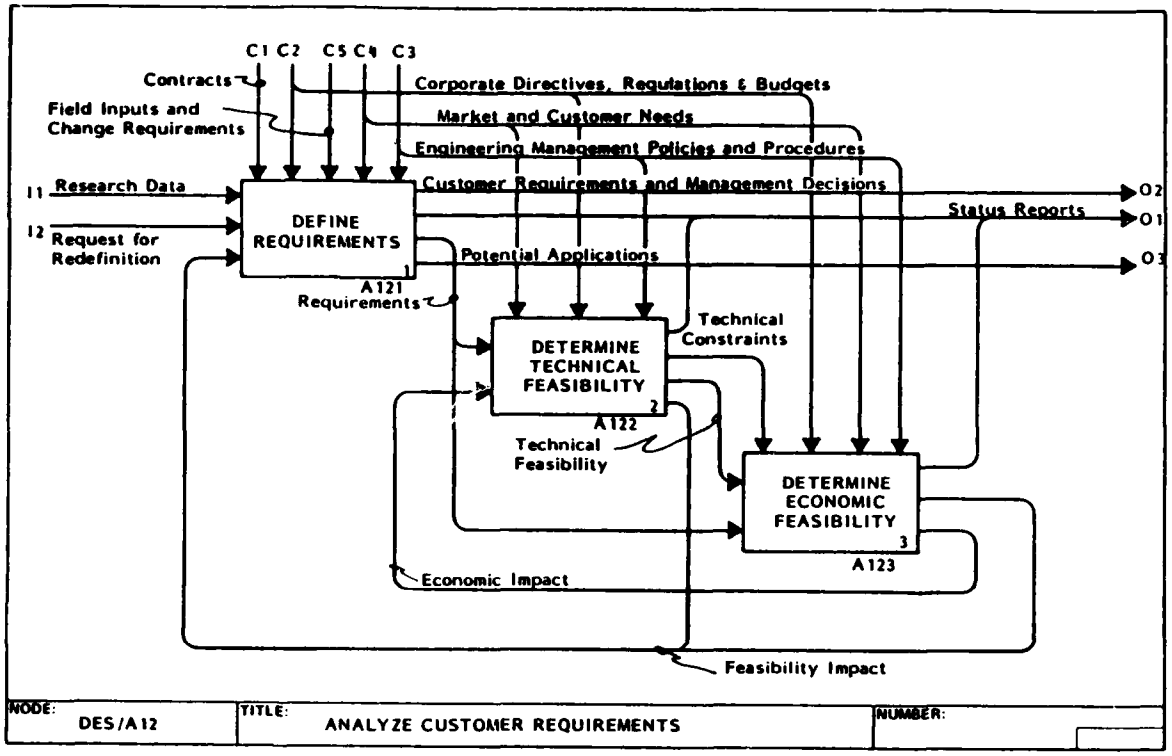

Glossary

Interpreted Requirements

The defined requirements which are clarified and construed.

State-of-the-Art Technology

The most current, up-to-date technology developed by the most well-respected and capable sources in the market.

Available Technology Needs

Requirements for technology that either is ready for use and/or can be obtained.

New Technology Needs

Requirements for technology which has not been developed or is unavailable.

FTR110410000U
8 September 1983

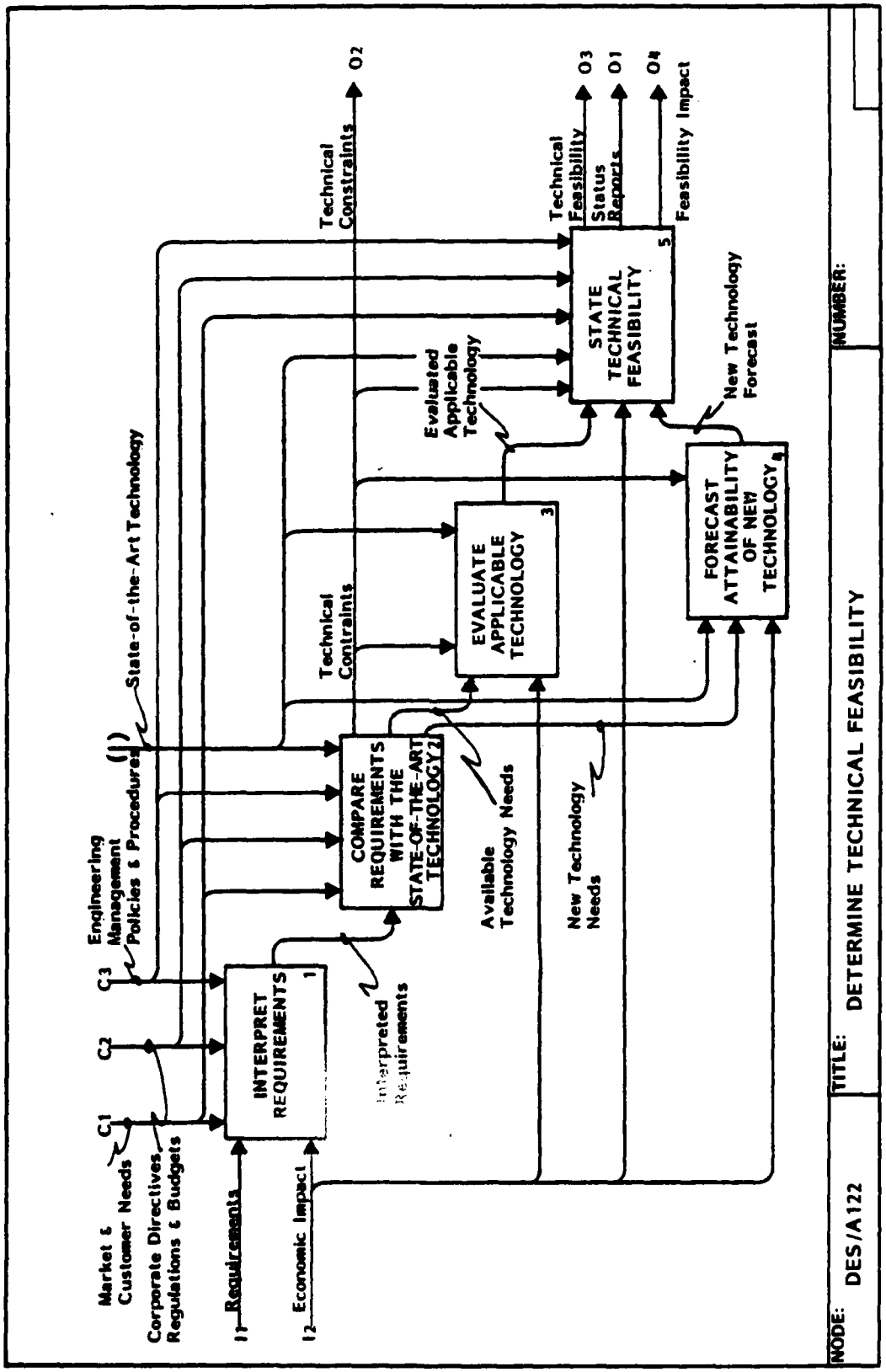
Market & Customer Needs
C1
Corporate Directives, Regulations & Budgets
C2
Engineering Management Policies & Procedures
C3
State-of-the-Art Technology
I1
Requirements
I2
Economic Impact
INTERPRET REQUIREMENTS
1
Interpreted Requirements
COMPARE REQUIREMENTS WITH THE STATE-OF-THE-ART TECHNOLOGY
2
Technical Constraints
O2
Available Technology Needs
New Technology Needs
EVALUATE APPLICABLE TECHNOLOGY
3
Evaluated Applicable Technology
STATE TECHNICAL FEASIBILITY
5
Technical Feasibility
O3
Status Reports
O1
Feasibility Impact
O4
New Technology Forecast
FORECAST ATTAINABILITY OF NEW TECHNOLOGY
4
NODE:
DES/A122
TITLE:
DETERMINE TECHNICAL FEASIBILITY
NUMBER:

22 Glossary Continued)

aluated Applicable Technology

Appraised, pertinent technology which .ill be used to determine techni- .l feasibility.

New Technology Forecast

A prognosis as to when the new technology will be available; it's also used to state the technical feasibility.

A123 DETERMINE ECONOMIC FEASIBILITY

Box 1 – Uses the stated requirements to subdivide the contract into major program elements. These contract tasks display what has to be accomplished and the amount of time it would take to fulfill the program requisites.

Box 2 – Utilizes the results of Box 1 to estimate the cost of the major program elements.

Box 3 – Employs the estimated cost from Box 2 and technical feasibility to determine whether or not the product design is economically feasible.

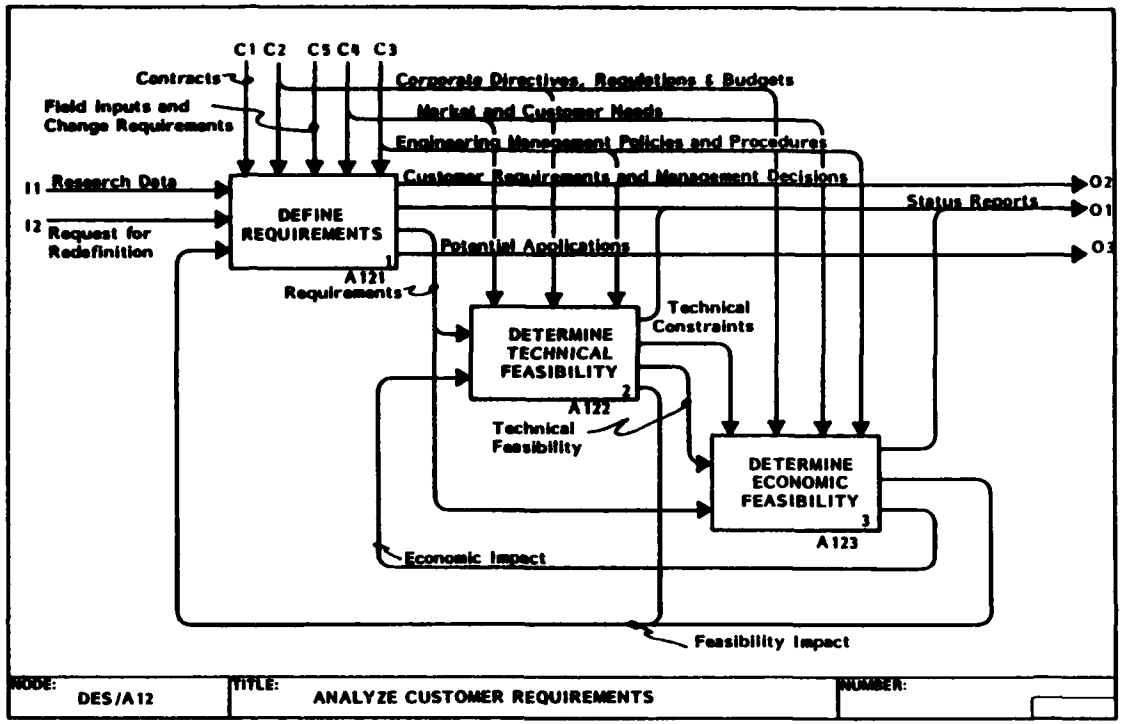

Glossary

Program Elements

Major portions of the specific contract, which are used to estimate the economic feasibility.

Estimated Cost

Apprised cost of the major program elements and is also used in estimating the economic feasibility.

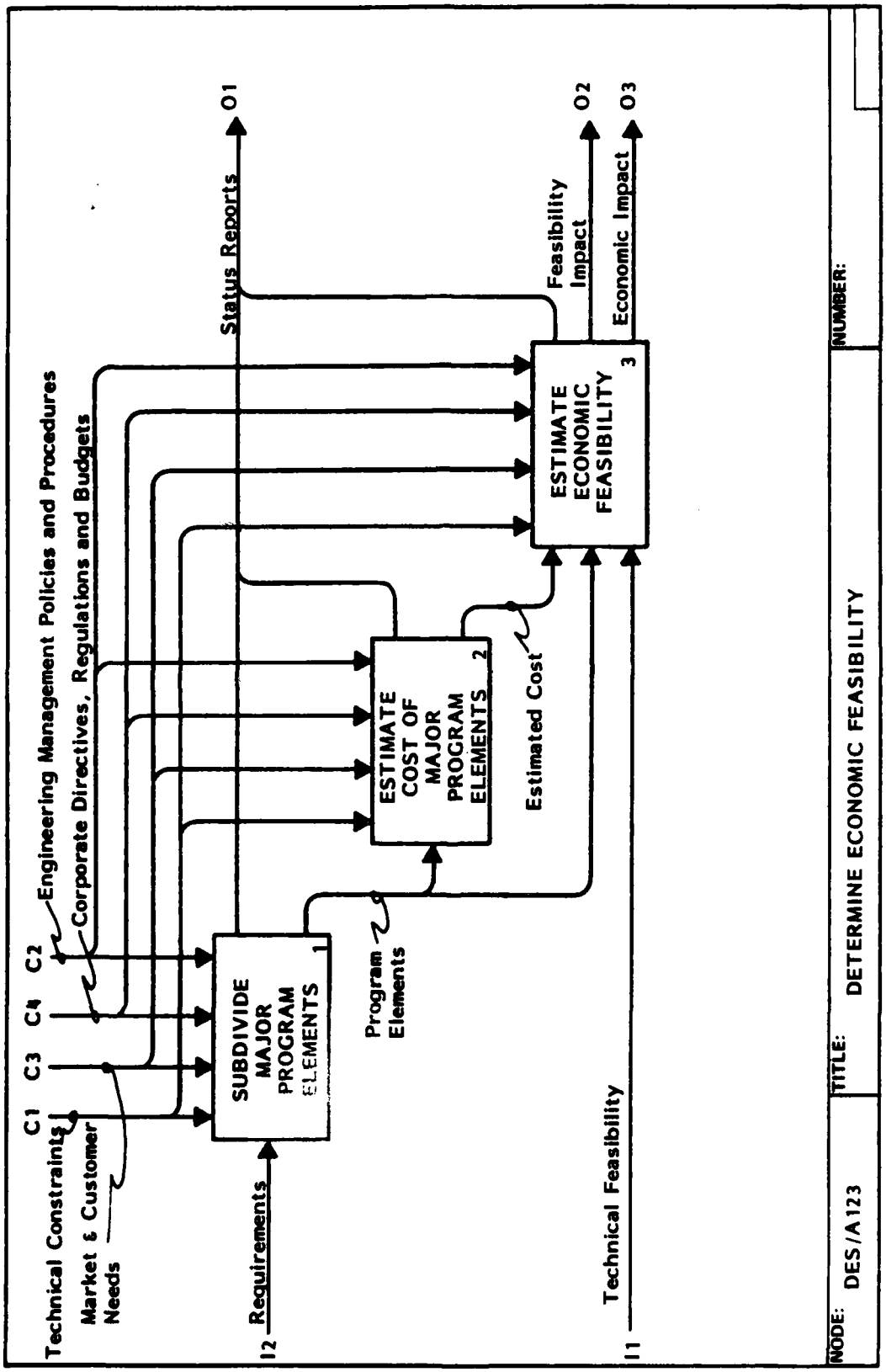
C1
C3
C4
C2
Technical Constraints
Market & Customer Needs
Engineering Management Policies and Procedures
Corporate Directives, Regulations and Budgets
I2
Requirements
SUBDIVIDE MAJOR PROGRAM ELEMENTS
1
Program Elements
ESTIMATE COST OF MAJOR PROGRAM ELEMENTS
2
Estimated Cost
Status Reports
O1
Technical Feasibility
I1
ESTIMATE ECONOMIC FEASIBILITY
3
Feasibility Impact
O2
Economic Impact
O3
NODE:
DES/A123
TITLE:
DETERMINE ECONOMIC FEASIBILITY
NUMBER:

A13 FORMULATE CONCEPTS

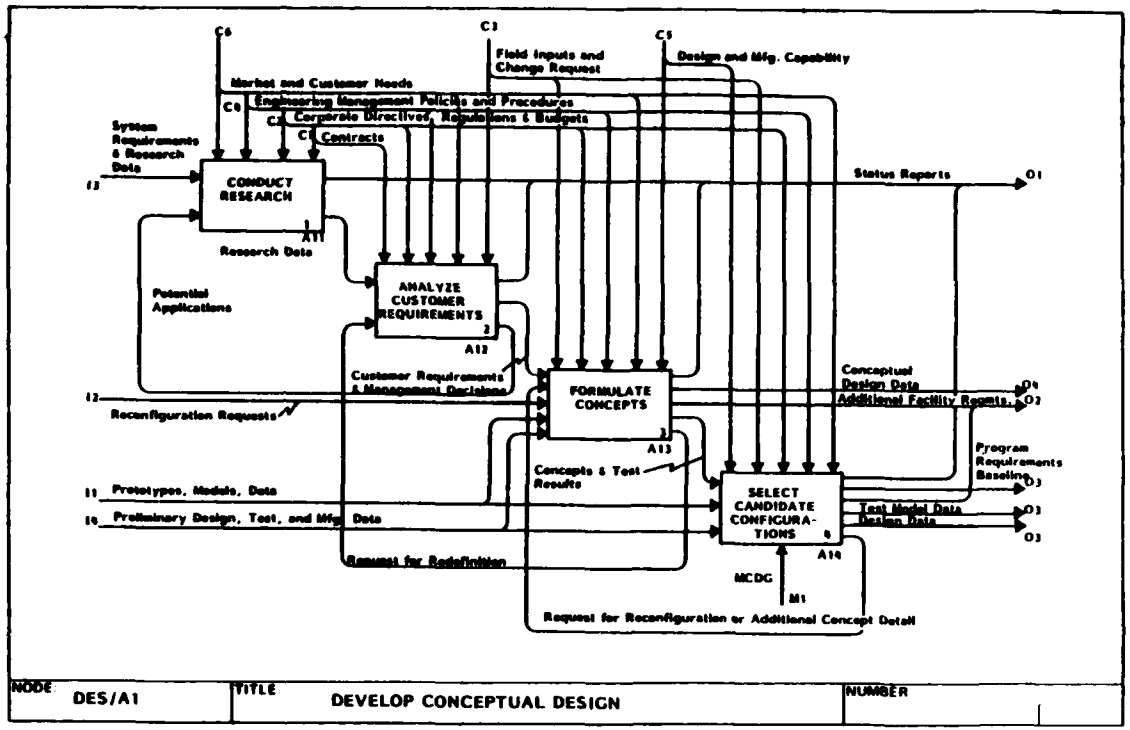

Box 1 Transforms data, subject to market and customer needs, from prototypes, models, preliminary design, tests, and Manufacturing, customer requirements and management decisions, additional concept detail, and reconfigurations requests into geometry. The geometry is used to develop the product concepts.

Box 2 Applies the configurations or alternate concepts from Box 1 to perform interdisciplinary studies. These consist of performance, dynamic, and environmental analyses and facilities and resource considerations for unique configurations. The results from these analyses and considerations are evaluated and integrated in an effort to optimize the product. As a result of this new information, additional product concepts may have to be developed.

Box 3 Structures and presents the information from Box 2 and defines only the acceptable configurations at a concept level. There is a feedback to Box 2 if a more in-depth analysis is required.

Glossary

Configurations/Request for Reconfigurations

(configurations) Alternate concepts which define the critical components and their physical location. (request for reconfigurations) Requests which are made due to additional data derived from interdisciplinary studies.

Technical Analysis Data/Requests for Configuration Detail

(technical analysis data) Comprised of performance data, environmental information, configuration data, concept information, and specific product-related data, such as thermal analysis and dynamic analysis. (requests for configuration detail) These are requests to perform further in-depth analysis as a result of additional data derived during the definition of candidate configurations.

FTR110410000U
8 September 1983

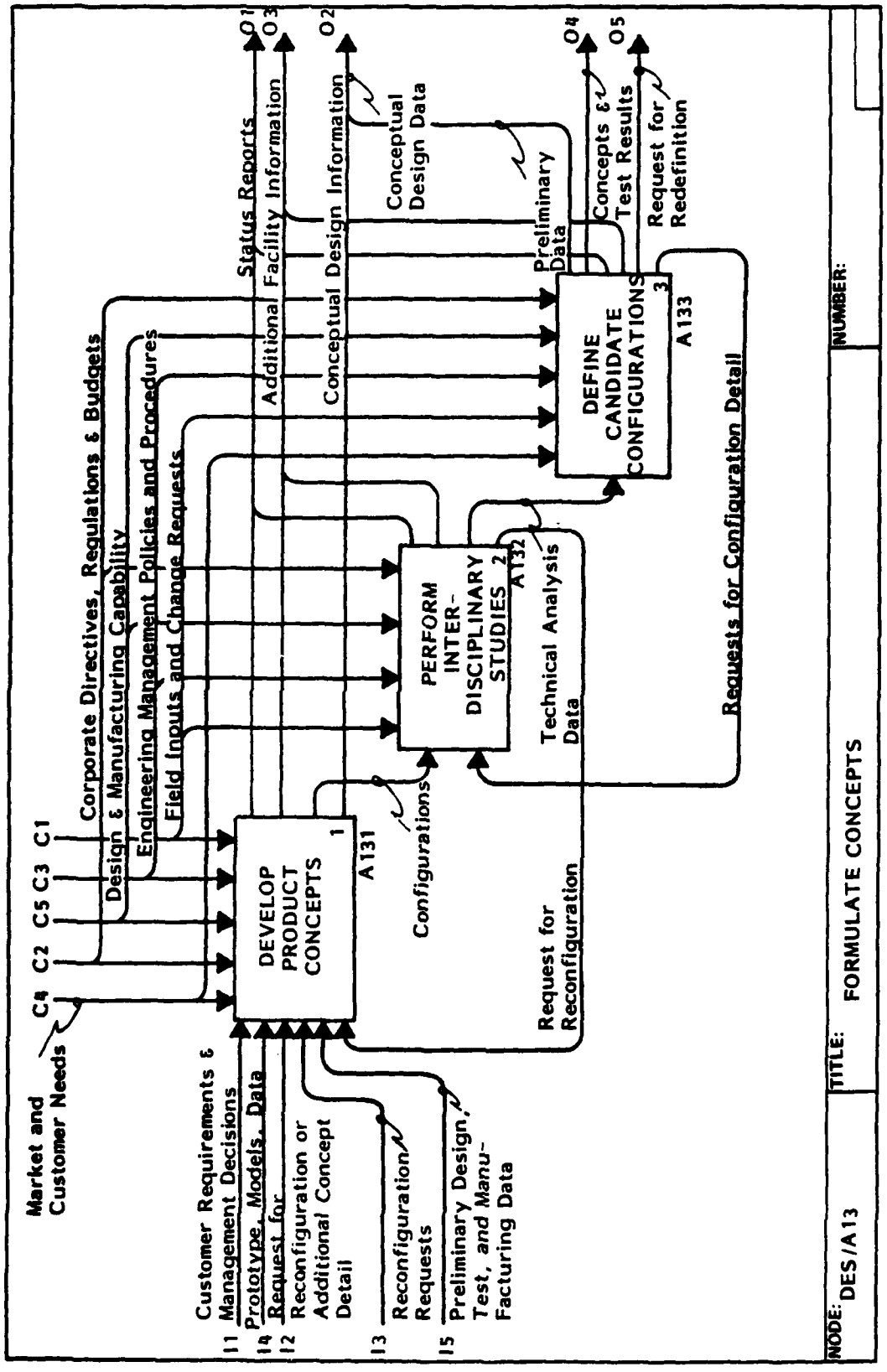
Market and Customer Needs
C4 C2 C5 C3 C1
Corporate Directives, Regulations & Budgets
Design & Manufacturing Capability
Engineering Management Policies and Procedures
Field Inputs and Change Requests
DEVELOP PRODUCT CONCEPTS
1
A131
Status Reports
Additional Facility Information
Conceptual Design Information
O1
O3
O2
Configurations
PERFORM INTER-DISCIPLINARY STUDIES
2
A132
Technical Analysis Data
Conceptual Design Data
Preliminary Data
DEFINE CANDIDATE CONFIGURATIONS
3
A133
Concepts & Test Results
Request for Redefinition
O4
O5
Requests for Configuration Detail
Request for Reconfiguration
Customer Requirements & Management Decisions
I1
Prototype, Models, Data
I4
Request for Reconfiguration or Additional Concept Detail
I2
Reconfiguration Requests
I3
Preliminary Design, Test, and Manu-Facturing Data
I5
NODE:
DES/A13
TITLE:
FORMULATE CONCEPTS
NUMBER:

A131 DEVELOP PRODUCT CONCEPTS

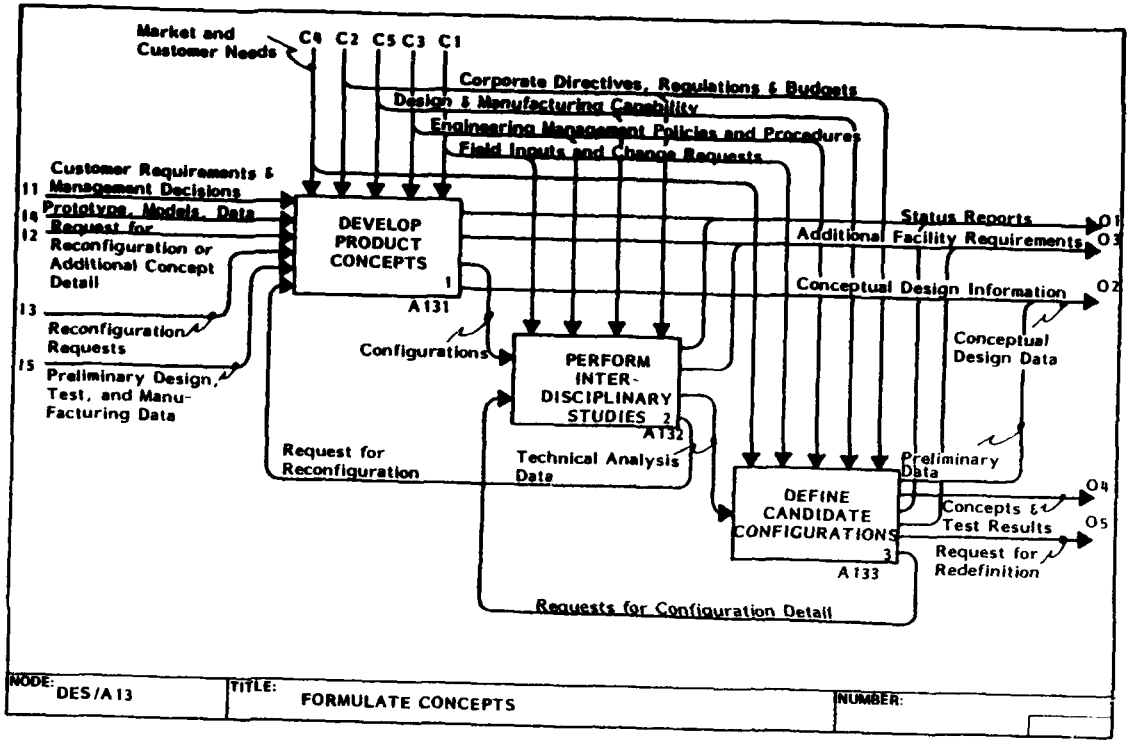

Box 1 – Customer requirements and Management decisions, reconfiguration requests, and information from prototypes, models, Preliminary Design, tests, and Manufacturing are used in reviewing the system requirements in relation to customer needs. From this, basic requirements are established and design assumptions are made for the parameters necessary to start the initiating of the trial concepts.

Box 2 – Applies the results of Box 1, the requests for reconfiguration or additional concept detail, and other data in the development of trial concepts of minimum weight, that will just satisfy all design criteria and are potential design solutions. The configurations incorporate innovative concepts sized to meet the design requirements and are developed as preliminary layouts with a limited definition of design assumptions. Critical components, such as engines and radar to establish the shape of the fuselage. Finally, the activity is normally accomplished by CAD producing a multitude of configurations within a given concept.

Box 3 – The results of boxes 1 and 2, along with reconfigurations requests, are employed by Box 3 in the validation of the trial concepts. A matrix of design firm design requirements and potential configurations are established which are believed to meet customer need and exceed industry competition.

Glossary

System Requirements Design Assumptions

A design baseline which is expanded and refined as the design process progresses.

Innovations Initial Sizing Layouts

Descriptions of minimum weight concepts incorporating innovations sized to meet requirements and presented as layout drawings and data.

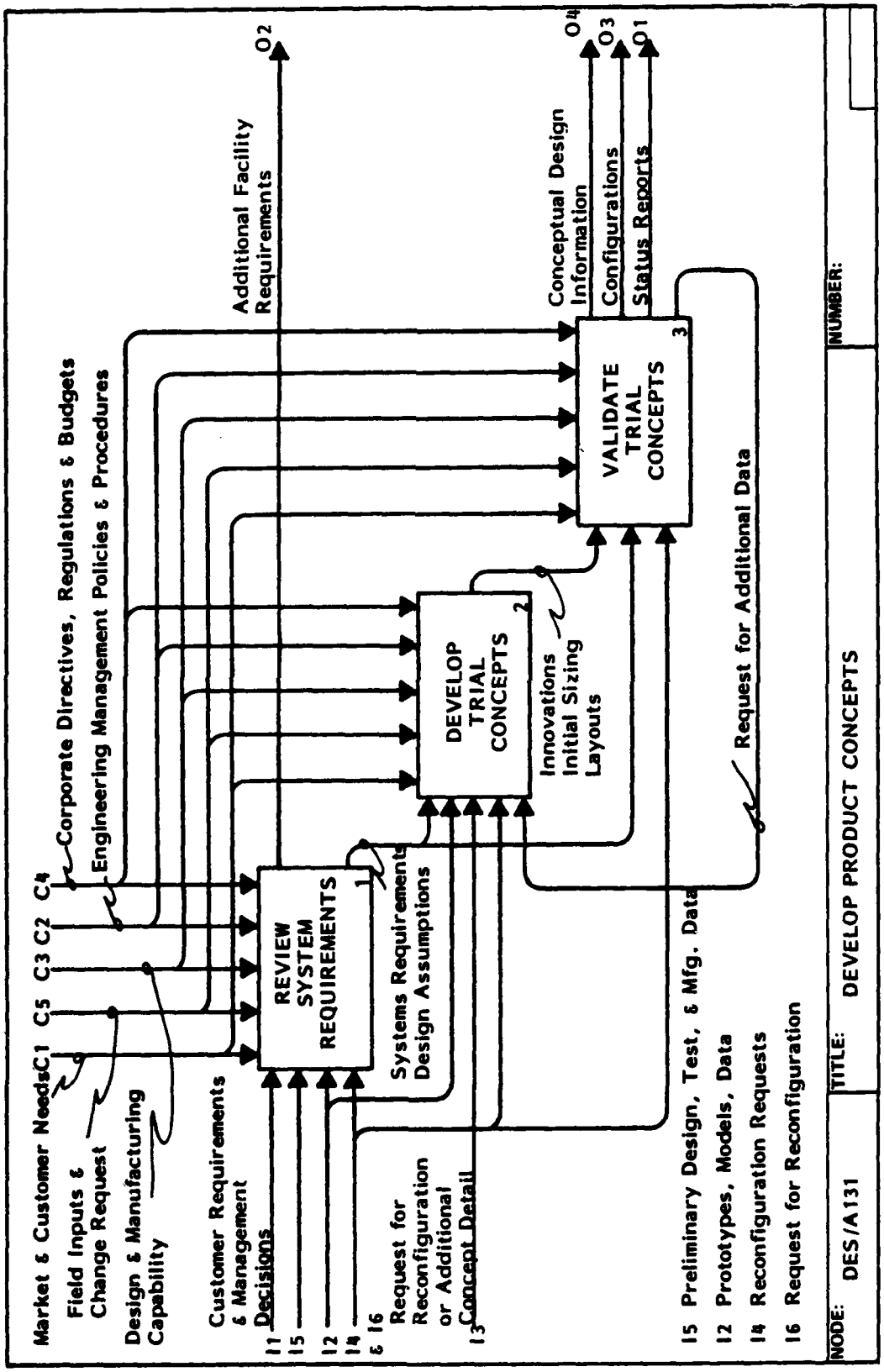
Market & Customer Needs C1 C5 C3 C2 C4
Field Inputs & Change Request
Design & Manufacturing Capability
Corporate Directives, Regulations & Budgets
Engineering Management Policies & Procedures
Customer Requirements & Management Decisions
I1 I5 I2 I4 & I6
Request for Reconfiguration or Additional Concept Detail
I3
REVIEW SYSTEM REQUIREMENTS
1
Systems Requirements Design Assumptions
Additional Facility Requirements
O2
DEVELOP TRIAL CONCEPTS
2
Innovations Initial Sizing Layouts
VALIDATE TRIAL CONCEPTS
3
Conceptual Design Information
Configurations
Status Reports
O4
O3
O1
Request for Additional Data
I5 Preliminary Design, Test, & Mfg. Data
I2 Prototypes, Models, Data
I4 Reconfiguration Requests
I6 Request for Reconfiguration
NODE: DES/A131
TITLE: DEVELOP PRODUCT CONCEPTS
NUMBER:

A132 PERFORM INTERDISCIPLINARY STUDIES

Box 1 – Uses configurations and the requests for configuration detail to initiate an interative cycle of configuration sizing and refinement. Product requirements, performance evaluations, and costs are reviewed for development trends and goals.

Box 2 – Performs the task analysis on the output from Box 1. This includes a weight estimation program to produce grid inertias, mass distributions, and updated target weight, stress analyses to provide internal sizing requirements and influence coefficients, and vibration and flutter analysis to produce a requirement for stiffness, acoustics, and panel flutter.

Box 3 – Applies the stochastic dynamics from Box 2 in the development of design concepts layouts which are made to define a realistic structural arrangement. There is a feedback to the second activity if any changes are requested or if technical problems arise.

Box 4 – Employs the structural arrangement from Box 3 to analyze the dynamic properties. In this activity, an evaluation is conducted on the refinements made in the preceding functions and will reflect those changes in a new, revised

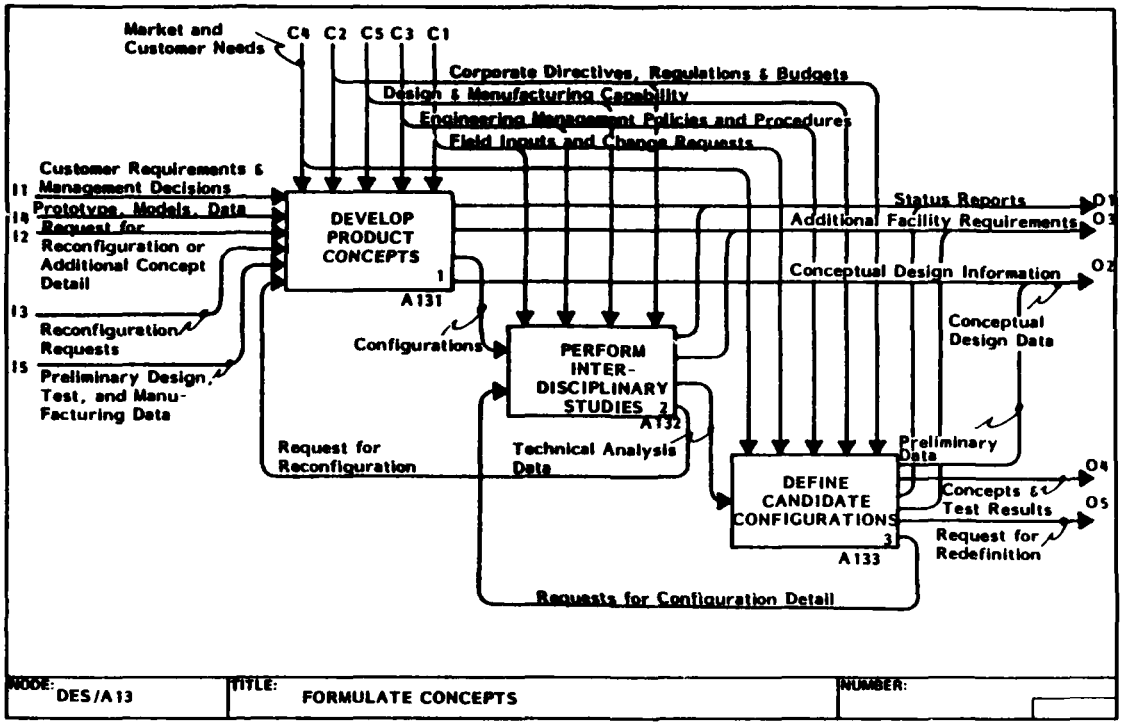

description either for iteration or for further development. Any technical problems which occur, and/or requested alterations are fed back to boxes 2 and 3.

Glossary

Additional Requirements

Extra requirements needed before concepts layouts can be made and task and dynamic properties analyses can commence.

Configuration Definition and Preliminary Loads

(configuration definition) The boundaries, extent, and nature of the alternate concept. (preliminary loads) Initial projection of resources, cost, and time needed to perform various tasks.

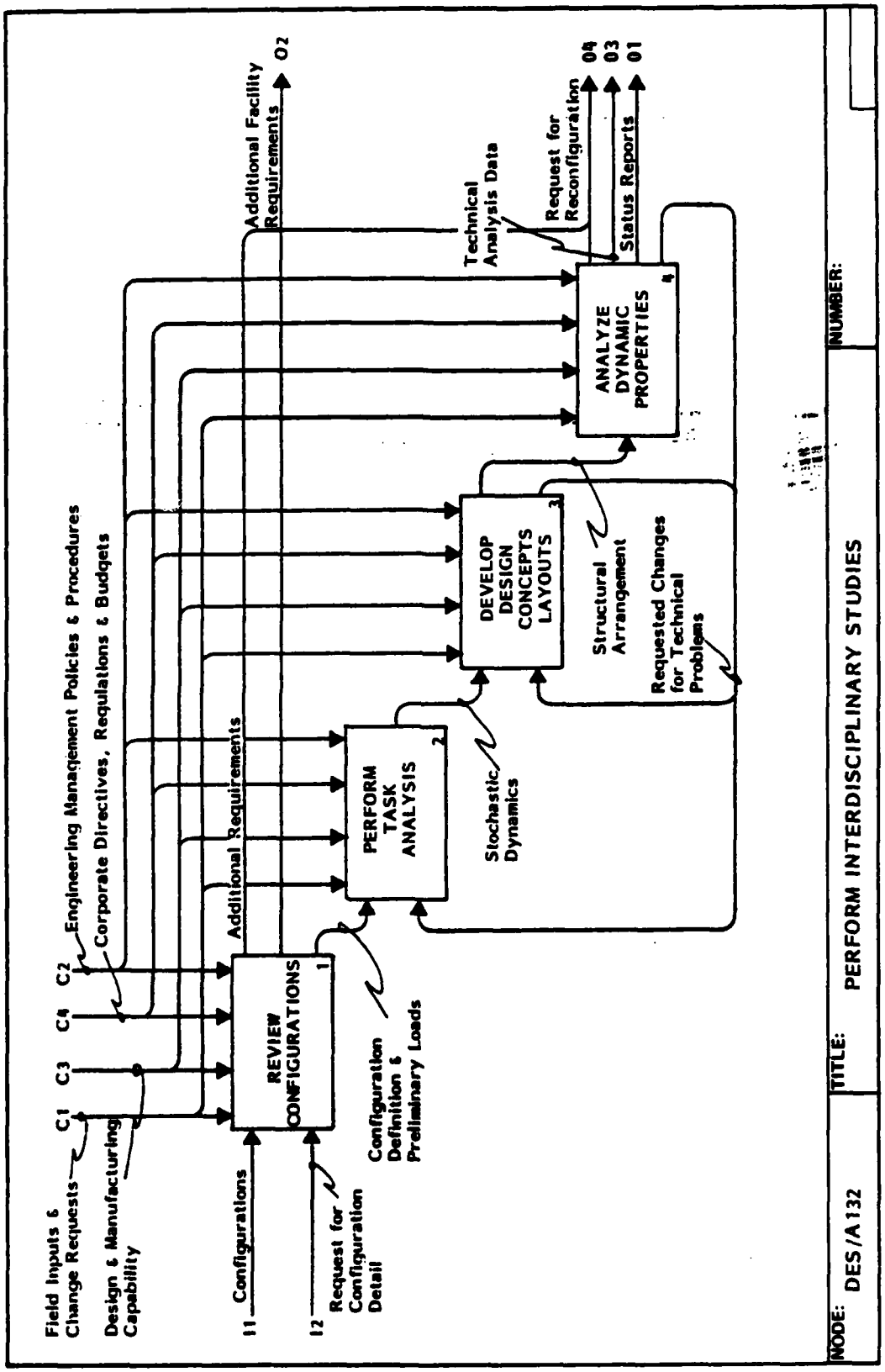
Field Inputs &
Change Requests
C1
C3
C4
C2
Engineering Management Policies & Procedures
Corporate Directives, Regulations & Budgets
Design & Manufacturing
Capability
I1
Configurations
I2
Request for
Configuration
Detail
REVIEW
CONFIGURATIONS
1
Additional Requirements
Additional Facility
Requirements
O2
Configuration
Definition &
Preliminary Loads
PERFORM
TASK
ANALYSIS
2
Stochastic
Dynamics
DEVELOP
DESIGN
CONCEPTS
LAYOUTS
3
Structural
Arrangement
Requested Changes
for Technical
Problems
Technical
Analysis Data
ANALYZE
DYNAMIC
PROPERTIES
4
Request for
Reconfiguration
Status Reports
O4
O3
O1
NODE:
DES/A132
TITLE:
PERFORM INTERDISCIPLINARY STUDIES
NUMBER:

(A132 Glossary Continued)

Stochastic Dynamics

Provides the task analysis results of the effects of force on materials during specified time frames (e.g. stiffness, flexibility, deflection, acoustics, vibration, and panel flutter).

Structural Arrangement

Definition of the concepts laid out to reflect the results of the task analysis.

Requested Changes

Requests for further analysis or development of concept layouts to resolve deficiencies.

Technical Problems

Occur as a result of faulty information from the task analysis and/or the design concepts layouts.

A133 DEFINE CANDIDATE CONFIGURATIONS

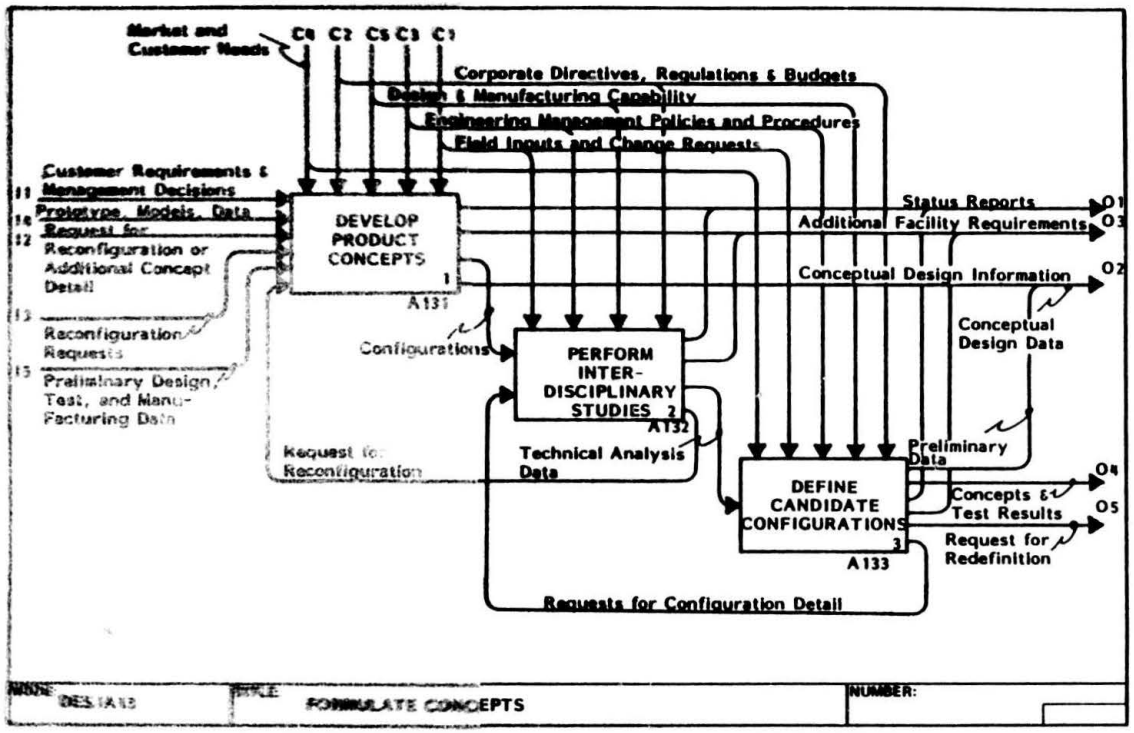

Box 1 – uses technical analysis data to refine design requirements and assumptions. This involves a regrouping of information and an assessment of the trends of the concept development. In addition, primary design "drivers" are identified. If needed, the requirements and assumptions are expanded and modified.

Box 2 – Utilizes the information from Box 1 to establish requirements governing the acceptable geometry. The parameters of this activity include major subsystem locations, length and volume of the product, and vented (fuel storage) areas.

Box 3 – Employs the system and subassembly integrations from Box 2 and the design requirements from the first activity in order to conduct the performance analysis. This determines that all deficiencies are corrected by resizing. The performance parameters consist of range, weight, take-off and landing distances, maneuverability, survivability, and payload.

Box 4 – Applies the performance data and the design requirements from Box 1 to perform an analysis concerning the system in its operational environment. It also considers the effect of such parameters as maintainability, reliability, turn-around time, and logistics. The output of this activity can be described as a true indication of the success of the development wherein life cycle costs, budget analysis, and system effectiveness evaluations are accomplished.

Box 5 – Takes the cost and effectiveness data from Box 4 and other information to perform the product synthesis. This confirms the completeness of the performance and design requirements and portrays the information in a suitable form, such as schematic diagrams, physical and mathematical models, computer simulations, and layouts. The portrayal is the basic source of data for initiating Preliminary Design. Some of the outputs are concepts and test results and the requests for redefinition and configuration detail.

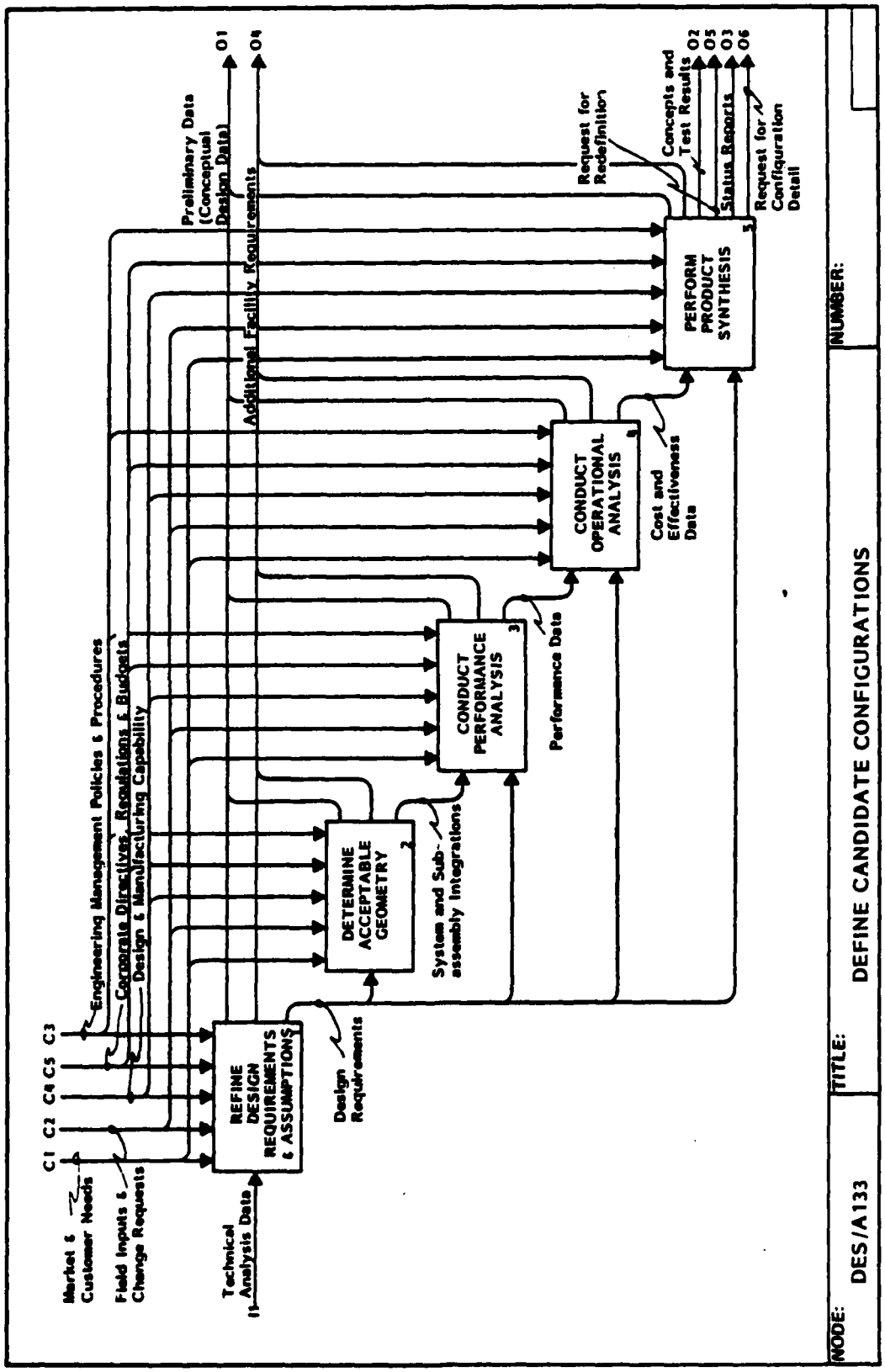
NODE: DES/A133
TITLE: DEFINE CANDIDATE CONFIGURATIONS
NUMBER:
REFINE DESIGN REQUIREMENTS & ASSUMPTIONS
DETERMINE ACCEPTABLE GEOMETRY
CONDUCT PERFORMANCE ANALYSIS
CONDUCT OPERATIONAL ANALYSIS
PERFORM PRODUCT SYNTHESIS
C1 C2 C4 C5 C3
Market & Customer Needs
Field Inputs & Change Requests
Technical Analysis Data
Engineering Management Policies & Procedures
Corporate Directives, Regulations & Budgets
Design & Manufacturing Capability
Design Requirements
System and Sub-assembly Integrations
Performance Data
Cost and Effectiveness Data
Preliminary Data (Conceptual Design Data)
Additional Facility Requirements
O1
O4
Request for Redefinition
Concepts and Test Results
Status Reports
Request for Configuration Detail
O2
O5
O3
O6

(A133 Continued)

Glossary

Design Requirements

Design baseline which is expanded and refined as the design process progresses.

System and Subassembly Integrations

Definition of the geometry and major subsystem equipment and subassembly locations.

Performance Data

Updated information on the range, weight, takeoff and landing distances, payload, maneuverability and survivability.

Cost and Effectiveness Data

Updated information which includes life-cycle costs, design-to-costs, and system effectiveness (availability, capability, and dependability).

A14 SELECT CANDIDATE CONFIGURATIONS

Box 1 – Configuration trade-off studies are conducted based on performance and life-cycle costs. The prime considerations of life-cycle are direct operating costs, maintainability, reliability, producibility, development/technical risks, survivability/vulnerability, availability, and dependability. It should be noted that the studies are performed using information from concepts and test results, prototypes, models, preliminary design, tests, and Manufacturing.

Box 2 – Uses the trade-off ranking data from box 1 to compare performance predictions with requirements. This is accomplished by documenting the variations from the latter. Also provided are the reasons for the deviations and the associated costs/resources to meet the requisites. There is a feedback to Box 1, if additional and/or clarified information is needed.

Box 3 – Utilizes the comparison data from Box 2 for the evaluation and selection of the optimum configurations. Some of the results include design and test model data and program requirements. At this point, the Conceptual Design and configuration effort is complete.

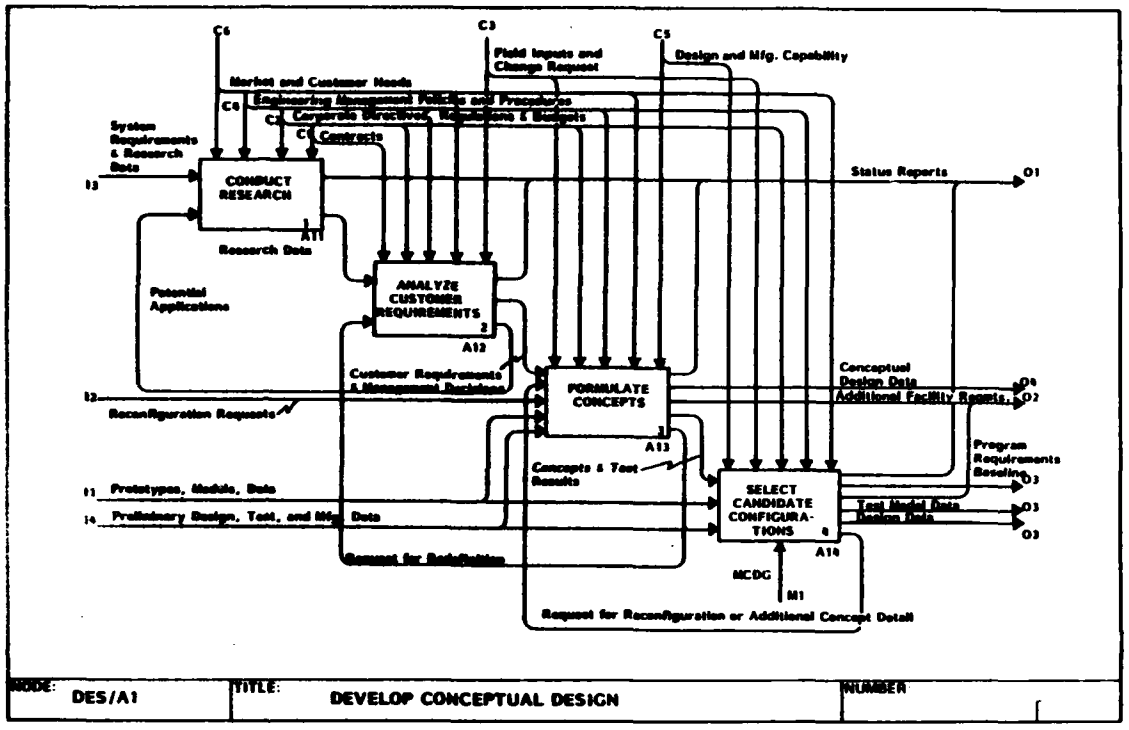

Glossary

Trade-Off Ranking Data/ Clarification Requests

(trade-off ranking data) is based on the number of parameters under consideration, such as performance, cost, maintainability, reliability, producibility, and development/technical risks. Sometimes the ranking is weighted in accordance with the most critical requirements and normalized accordingly. (clarification requests) These are requests for more precise and/or additional data.

Comparison Data

Documents requirements and the variations from the baseline.

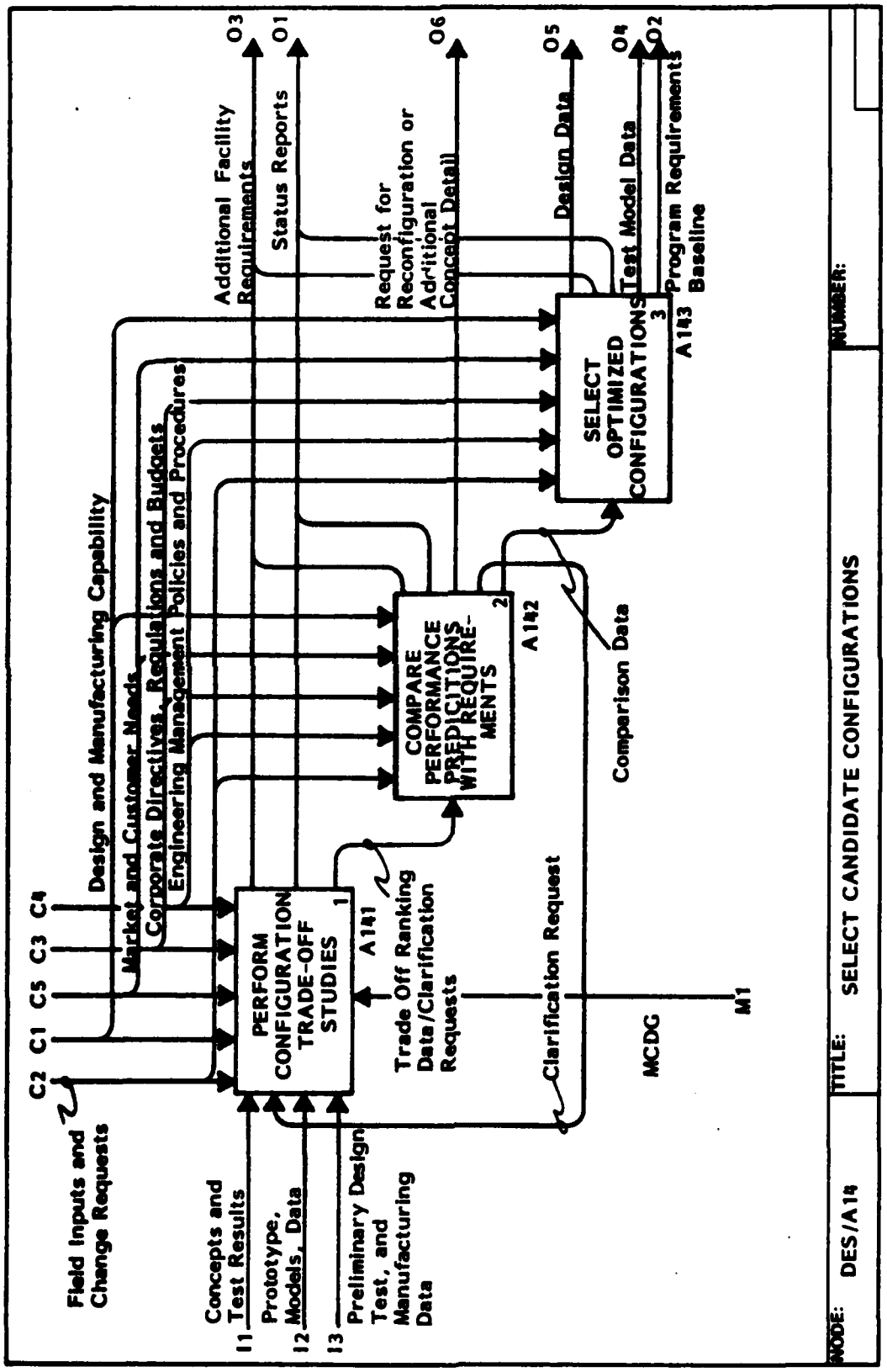
C2 C1 C5 C3 C4
Field Inputs and Change Requests
Design and Manufacturing Capability
Market and Customer Needs
Corporate Directives, Regulations and Budgets
Engineering Management Policies and Procedures
I1 Concepts and Test Results
I2 Prototype, Models, Data
I3 Preliminary Design Test, and Manufacturing Data
PERFORM CONFIGURATION TRADE-OFF STUDIES
1
A141
Trade Off Ranking Data/Clarification Requests
COMPARE PERFORMANCE PREDICTIONS WITH REQUIRE-MENTS
2
A142
Clarification Request
Comparison Data
SELECT OPTIMIZED CONFIGURATIONS
3
A143
O3 Additional Facility Requirements
O1 Status Reports
O6 Request for Reconfiguration or Additional Concept Detail
O5 Design Data
O4 Test Model Data
O2 Program Requirements Baseline
MCDG
M1
NODE: DES/A14
TITLE: SELECT CANDIDATE CONFIGURATIONS
NUMBER:

A141 PERFORM CONFIGURATION TRADE-OFF STUDIES

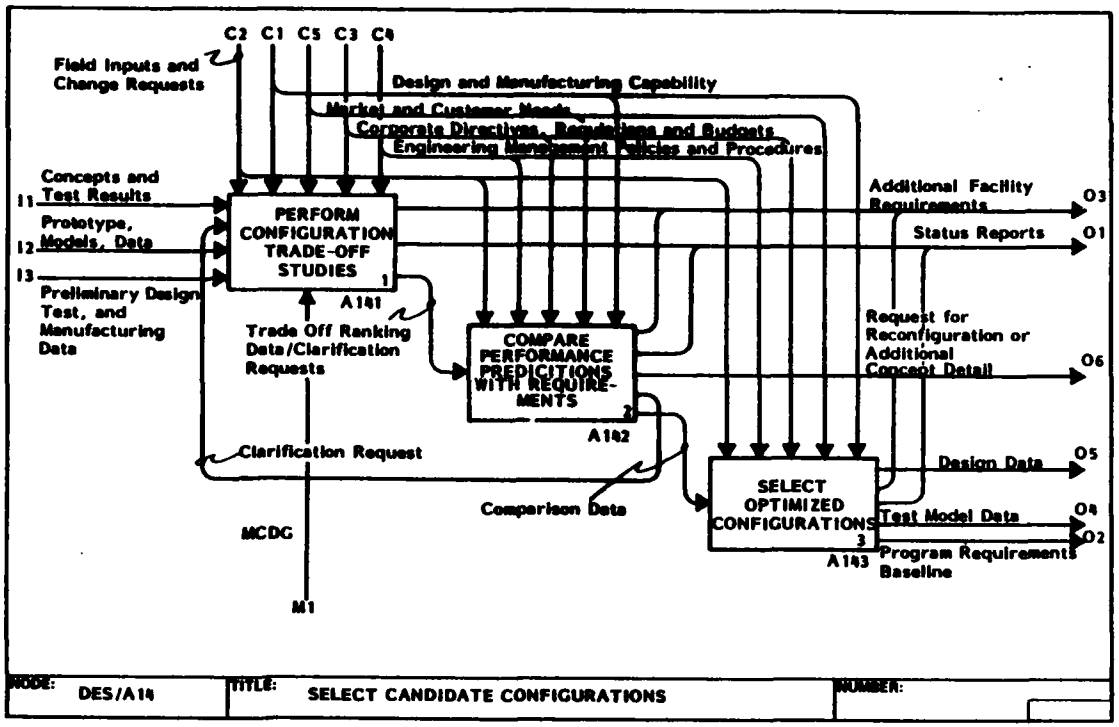

Box 1 – Using marketing data showing customer needs, field inputs, and change requests, several potential missions are generated from which one or more are selected as potentially feasible and are prepared for more in-depth studies. This data could consist of routes, ranges, payloads, field accommodations (altitude, runways, hangars) seasonal effects, competition, and local and federal regulations to be satisfied by the proposed preliminary design.

Box 2 – Operating cost data is prepared using the mission performance as criteria and data extrapolated from histories of operating costs for similar missions and aircraft influenced by anticipated performance improvements by the proposed preliminary design.

Box 3 – The operation of the proposed preliminary design is studied during its intended mission for maintenance requirements and mission reliability and their effect on the user. These items affect the number of aircraft required to sustain a particular mission and are part of the operating costs.

Box 4 – Candidate preliminary designs are studied for producibility and production costs. Difficult designs (production-wise) will increase production costs and cost-to-the-customer with such potential effects as lesser profits to the producer and customer, or fewer customers; unless, the uniqueness makes the mission accomplishment a good deal better. The availability of production facilities may require additional facilities and tools and related cost or subcontracts to an available company with its production costs.

Box 5 – The preliminary designs together with their mission performance, operating costs, maintenance and reliability features, and producibility costs are ranked. Unique designs which perform the mission better but cost more are weighed against less costly designs with minimum performance and their effect on sales.

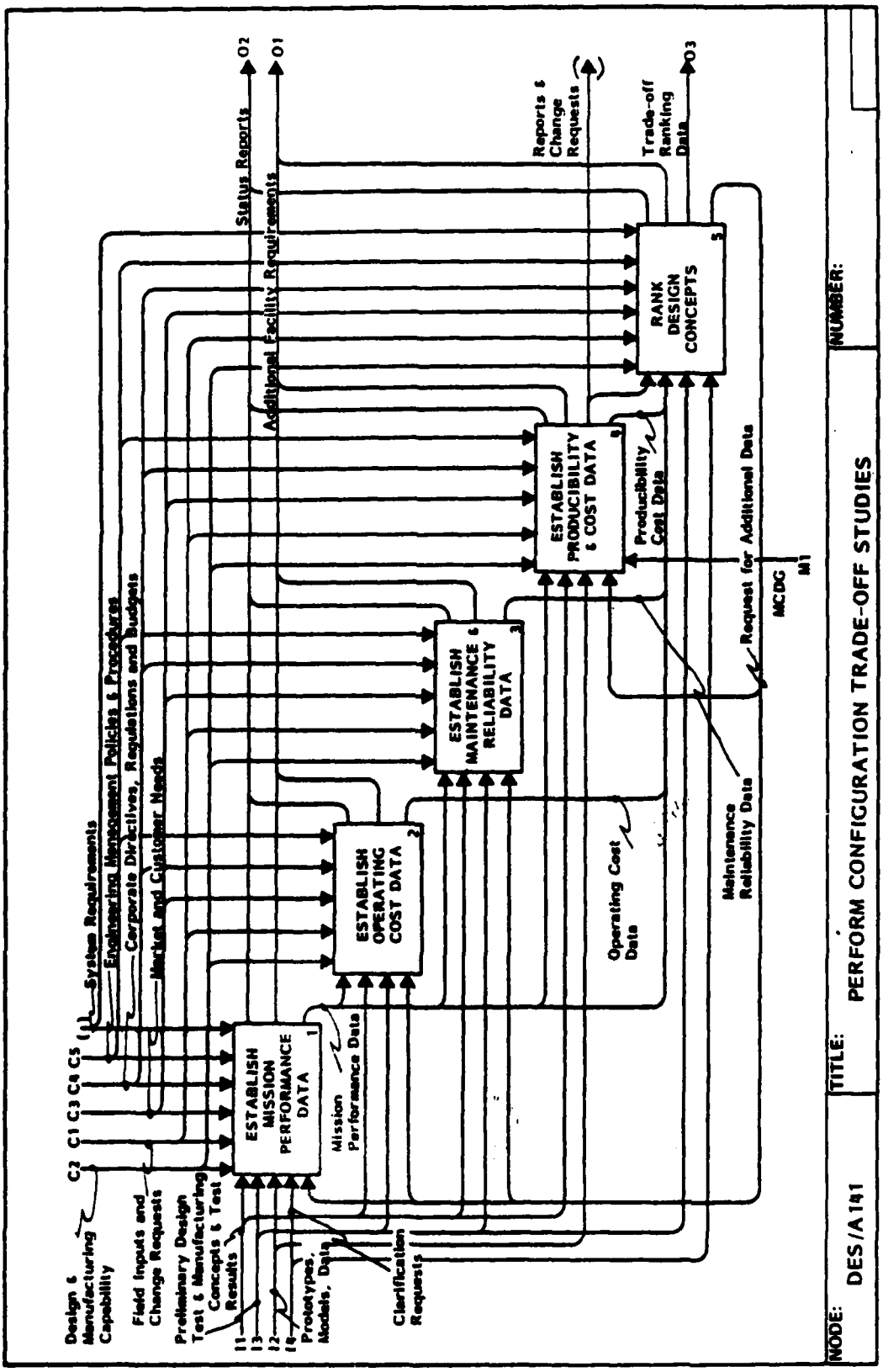
NODE: DES/A141
TITLE: PERFORM CONFIGURATION TRADE-OFF STUDIES
NUMBER:
ESTABLISH MISSION PERFORMANCE DATA 1
ESTABLISH OPERATING COST DATA 2
ESTABLISH MAINTENANCE & RELIABILITY DATA 3
ESTABLISH PRODUCIBILITY & COST DATA 4
RANK DESIGN CONCEPTS 5
C2 C1 C3 C4 C5
(1) System Requirements
Engineering Management Policies & Procedures
Corporate Directives, Regulations and Budgets
Market and Customer Needs
Design & Manufacturing Capability
Field Inputs and Change Requests
Preliminary Design Test & Manufacturing Concepts & Test Results
I1 I3 I2 I6
Prototypes, Models, Data
Clarification Requests
Mission Performance Data
Status Reports
Additional Facility Requirements
O2
O1
Reports & Change Requests
Trade-off Ranking Data
O3
Producibility Cost Data
Request for Additional Data
MCDC
M1
Operating Cost Data
Maintenance Reliability Data

(A141 Continued)

Performance growth potentials are also important factors in design configuration trade-offs.

Glossary

Mission Performance Data

A mission description that includes: payloads (number of passengers and seating arrangements, weight and dimension, cargo, combinations of passengers and cargo) routes and ranges (long flights, short flights, over water or land, fields available, maintenance available, space available at terminals, altitudes of fields); environment (temperature altitudes, moisture, cargo, corrosive atmosphere, etc.).

Operating Cost Data

Data relating to cost-per-seat mile, ton mile, breakeven point, profit potentials.

Maintenance-Reliability Data

Data describing convenience and frequency of maintenance and reliability goals for structure and equipment.

Producibility Cost Data

Data relating to the cost of producing the vehicle used for pricing.

Request for Additional Data

Requests for further data development.

System Requirements

Those specific requirements levied by Management on design goals.

A142 COMPARE PERFORMANCE PREDICTIONS WITH REQUIREMENTS

Box 1 - The trade-off ranking data for performance is compared to the mission performance target. Excesses and deficiencies are noted and alternatives are proposed. Additional comparison data is made as requested.

Box 2 – The customer costs of acquiring the equipment for accomplishing various missions is prepared and compared. Equipment acquisition would include original equipment, spare parts, training costs for use and maintenance, disposition of replaced equipment, and cost of financing the acquisition program.

Box 3 – The trade-off ranking data for operating costs is compared to the operating cost targets. Variances to the target are explained for possible compromises in performance. Additional cost data is prepared as requested. The trade-off ranking data for maintenance and reliability is compared to the maintenance and reliability targets. The effects of compromises are predicted in mission performance and operating costs. Additional data may be furnished to complete documentation if requested.

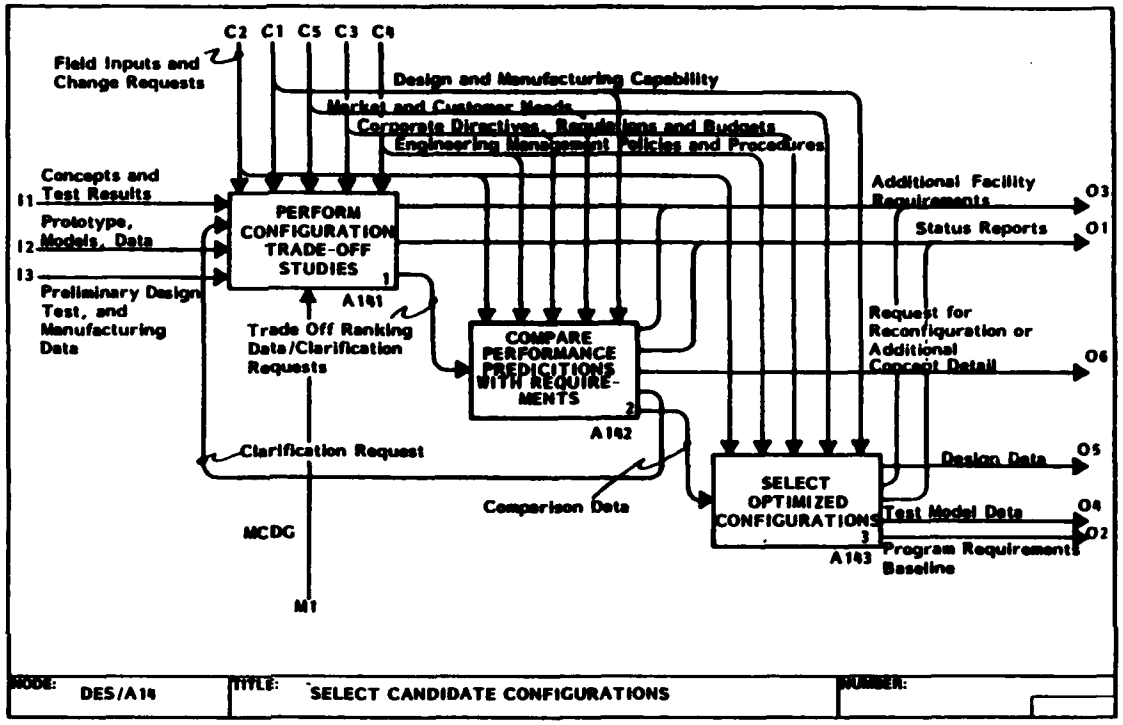

Box 4 – The results of comparisons of predictions to targets for mission performance, acquisition operating costs and maintenance, and reliability are documented. Additional data is requested where needed to complete documentation. The schedule status as well as condition of the configuration in fulfilling targets is reported. Comparison data is documented and requests may be made for reconfiguration if targets are missed or for more concept data if there are voids.

Glossary

System Requirements

Those specific requirements levied by management on design goals.

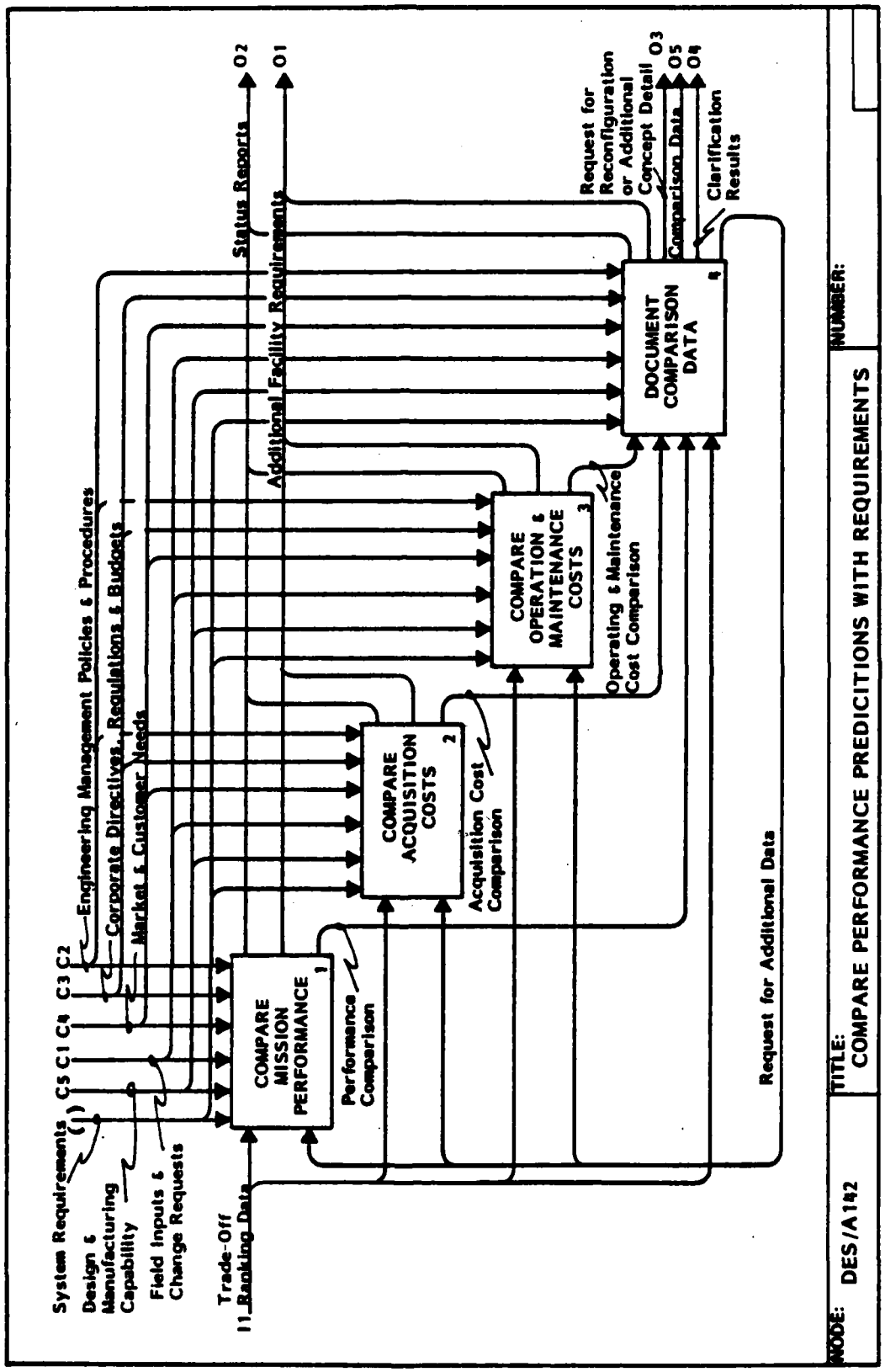
NODE: DES/A142
TITLE: COMPARE PERFORMANCE PREDICITIONS WITH REQUIREMENTS
NUMBER:
System Requirements
Design & Manufacturing Capability
Field Inputs & Change Requests
Trade-Off Ranking Data
I1
C5 C1 C4 C3 C2
Engineering Management Policies & Procedures
Corporate Directives, Regulations & Budgets
Market & Customer Needs
COMPARE MISSION PERFORMANCE 1
Performance Comparison
COMPARE ACQUISITION COSTS 2
Acquisition Cost Comparison
COMPARE OPERATION & MAINTENANCE COSTS 3
Operating & Maintenance Cost Comparison
DOCUMENT COMPARISON DATA 4
Request for Additional Data
Status Reports
O2
Additional Facility Requirements
O1
Request for Reconfiguration or Additional Concept Detail
O3
Comparison Data
O5
Clarification Results
O4

(A142 Glossary Continued)

Request for Reconfiguration or Additional Concept Data

Configuration revision requests or request for missing or incomplete data.

Comparison Data

Data which shows the difference between the design concept target and the anticipated performance of the concept.

Clarification Requests

Requests for clarification of performance data.

Performance Comparison

Data showing the fulfillment or difference between the mission target performance and the anticipated performance from the design concept.

Acquisition Cost Comparison

Data relating to acquisition costs between several configurations.

Operating and Maintenance Cost Comparisons

Data showing the fulfillment or difference between the operating cost target and the anticipated maintenance cost of the design concept.

A143 SELECT OPTIMIZED CONFIGURATIONS

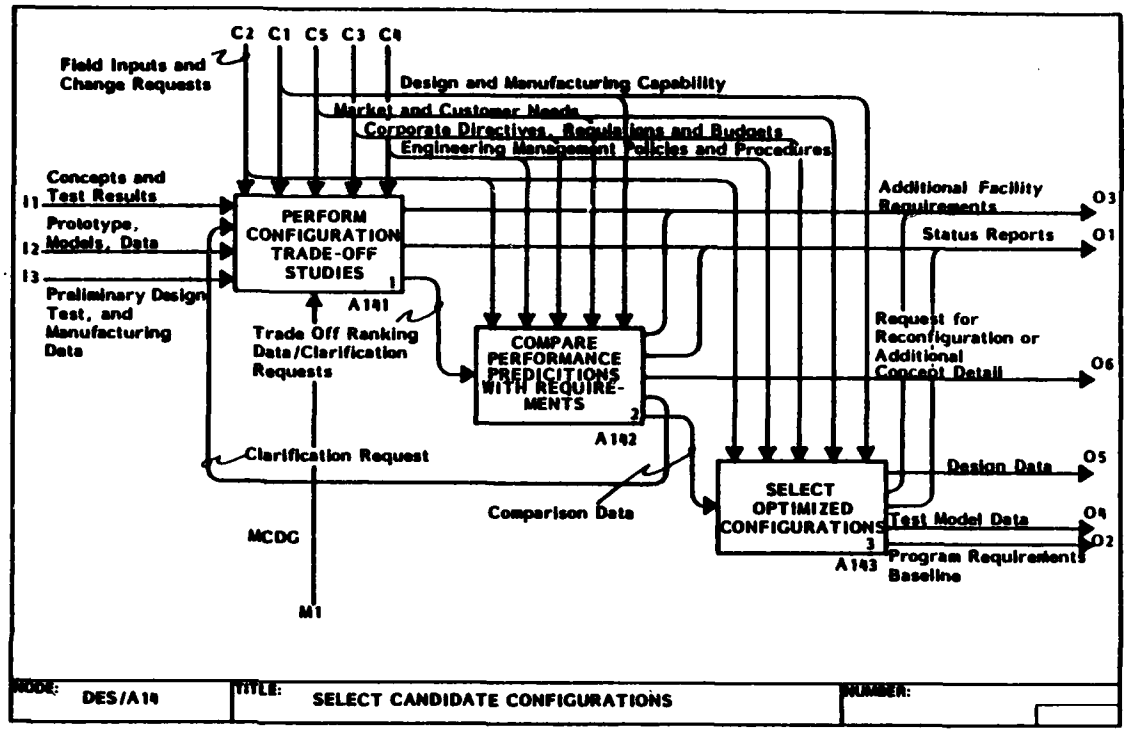

Box 1 – The performances (range, load, speed, etc.) are examined and the concept with the combination giving the best performance for most of the performance targets is selected as a candidate. This is an iterative process with several picks made of "optimum performance."

Box 2 – Using the comparison data developed in DES/A1424, the optimum acquisition costs are selected for each configuration satisfying the mission selected.

Box 3 – The operating and maintenance costs documented in DES/A1424 are reviewed and the optimum selected for the mission target configuration.

Box 4 – Performance, operating costs, and production costs are ranked giving various weighting factors to these features that appear to match their need or marketability. This activity will be performed many times as concepts are tailored and refined. The ranking data will be used to identify candidate configurations or give reason to request further information or require reconfiguration.

Box 5 – Using ranked optimum qualities (performance, operating costs, production costs) candidate configuration concepts are selected which appear to fulfill the target requirements and marketability.

Glossary

Ranking Data

Consists of a collection of optimum selections of performance operating costs and production costs for several combinations of concepts; each area is optimized, with the effect in related areas noted and ranked.

Selected Operation and Maintenance Cost Data

The optimum operation and maintenance cost information which will be used in the identification of candidate configurations.

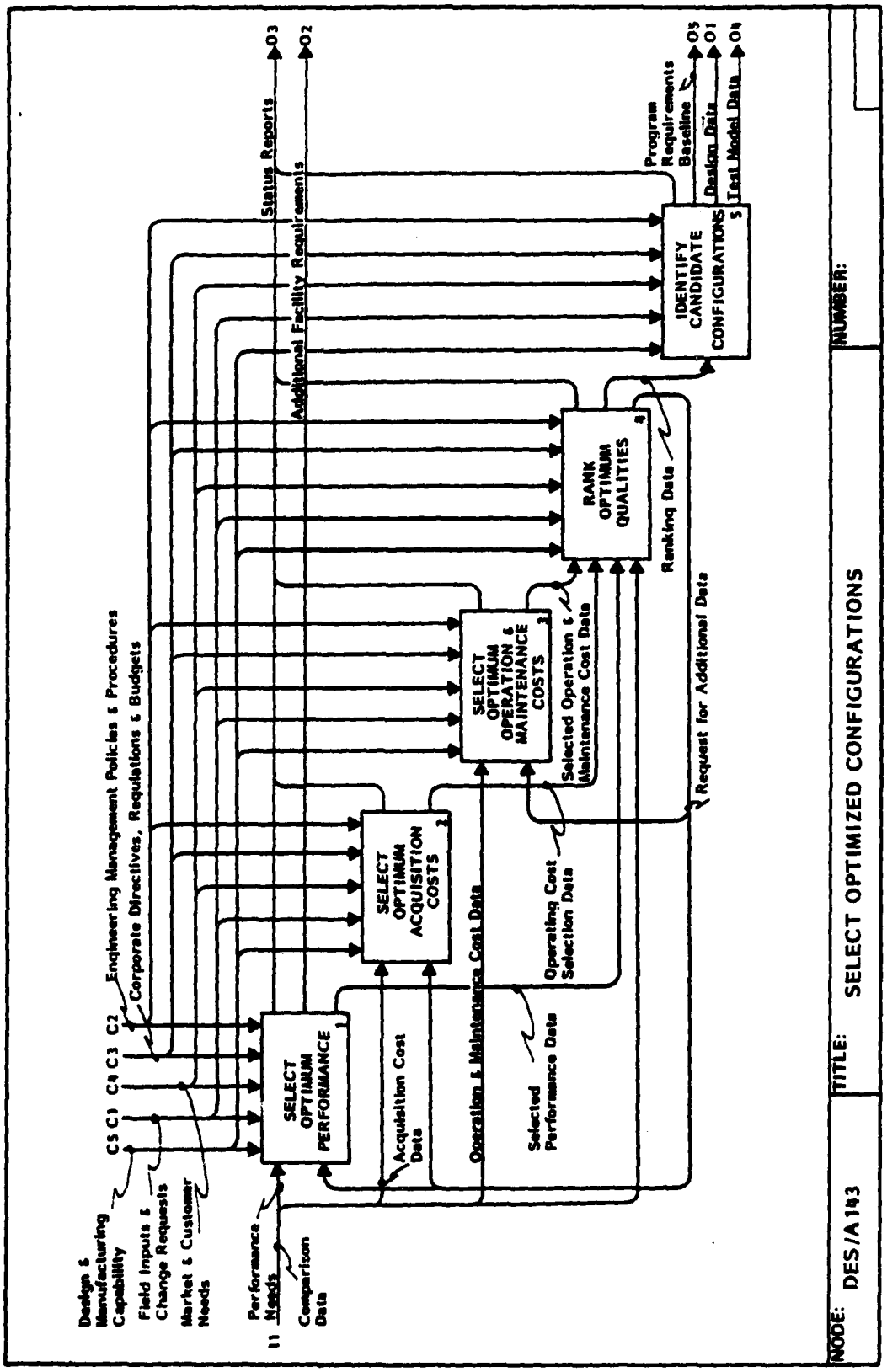
NODE: DES/A1&3
TITLE: SELECT OPTIMIZED CONFIGURATIONS
NUMBER:
SELECT OPTIMUM PERFORMANCE 1
SELECT OPTIMUM ACQUISITION COSTS 2
SELECT OPTIMUM OPERATION & MAINTENANCE COSTS 3
RANK OPTIMUM QUALITIES 4
IDENTIFY CANDIDATE CONFIGURATIONS 5
Design & Manufacturing Capability
Field Inputs & Change Requests
Market & Customer Needs
Performance Needs
Comparison Data
I1
C5 C1 C4 C3 C2
Engineering Management Policies & Procedures
Corporate Directives, Regulations & Budgets
Acquisition Cost Data
Operation & Maintenance Cost Data
Selected Performance Data
Operating Cost Selection Data
Selected Operation & Maintenance Cost Data
Ranking Data
Request for Additional Data
Status Reports
Additional Facility Requirements
Program Requirements Baseline
Design Data
Test Model Data
O3
O2
O5
O1
O4

(A143 Glossary Continued)

Performance Data

Consists of the mission target performance and the anticipated performance from the design concept.

Acquisition Cost Data

Information depicting the acquirement costs of several configurations.

Operation and Maintenance Cost Data

The operation cost data relates to the operation cost target and consists of cost per seatmile, ton mile, break-even point and profit potentials; the maintenance cost information is comprised of the anticipated maintenance cost of the design concept. It includes the convenience and frequency of maintenance goals for structure and equipment.

Selected Performance Data

The optimum performance information which will be used in the selection of candidate configurations.

Operating Cost Selection Data

The optimum acquisition cost information which will be used to identify the candidate configurations.

A2 DEVELOP PRELIMINARY DESIGN

Box 1 – Conforms, by analyses, trade studies, and improvements, the information from prototypes, models, Conceptual Design, and recommendations from Detail Design to build a baseline capable of being subjected to detail investigations. Moreover, the activity involves applying more advanced analytical methods to the design problem in order to build confidence in the final selected design.

Box 2 – Uses the Conceptual Design information to evaluate candidate configurations in relation to engineering, manufacturing, logistic, and economic considerations subject to the design analysis data from box 1. As a result, a concept is recommended. In case of problems, there is a feedback to box 1 for minor reconfiguration requests.

Box 3 – Applies the recommended configuration and manufacturing cost and schedules from box 2, along with analysis reports from box 1 to confirm that all necessary analyses and studies have been completed and that the results satisfy the requirement to commit to the Detail Design phase. If the Preliminary Design is not approved, new requests for a selection change are fed back into box 2. It should be noted that this is a Management activity.

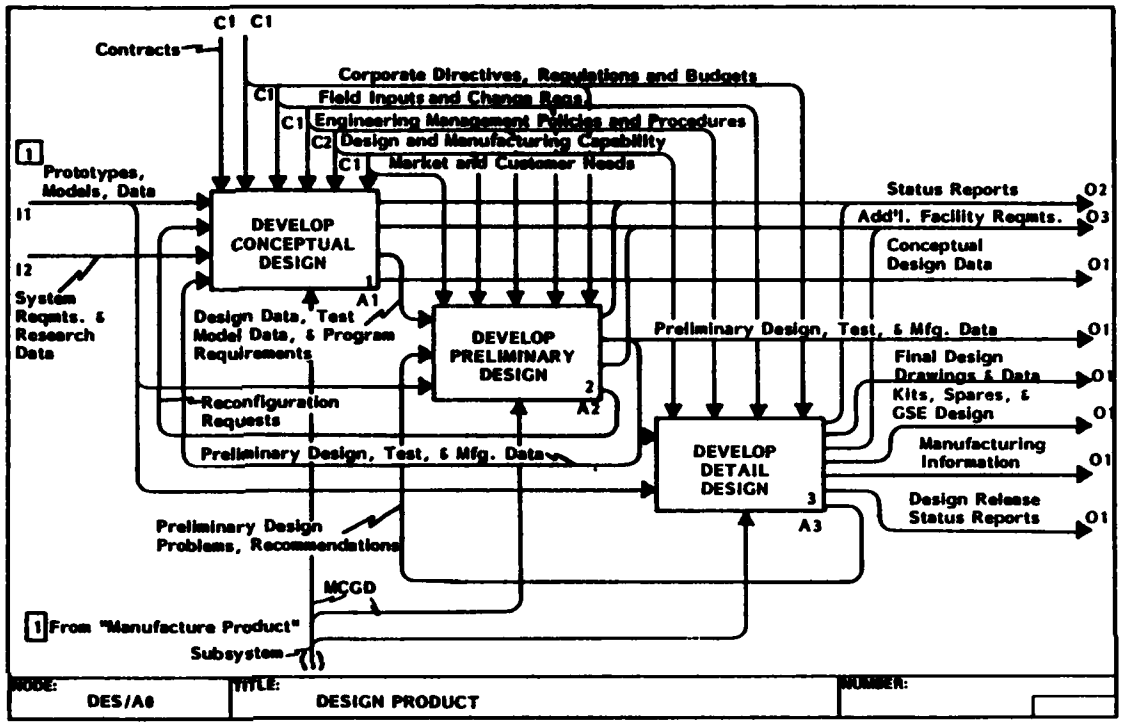

Glossary

Marketing and Cost Data

Consists of political, technological, managerial, and financial information from the Company. The data deals with the market potential and defines the resources committed to compete for that market.

Design Analysis Data/Minor Reconfiguration Requests

(design analysis data) consists of mass property reports, structural loads, subsystem requirements, dynamics analysis, producibility analysis, schematics, and configuration layouts. The reciprocal data flow (minor reconfiguration requests) are alterations to the configuration.

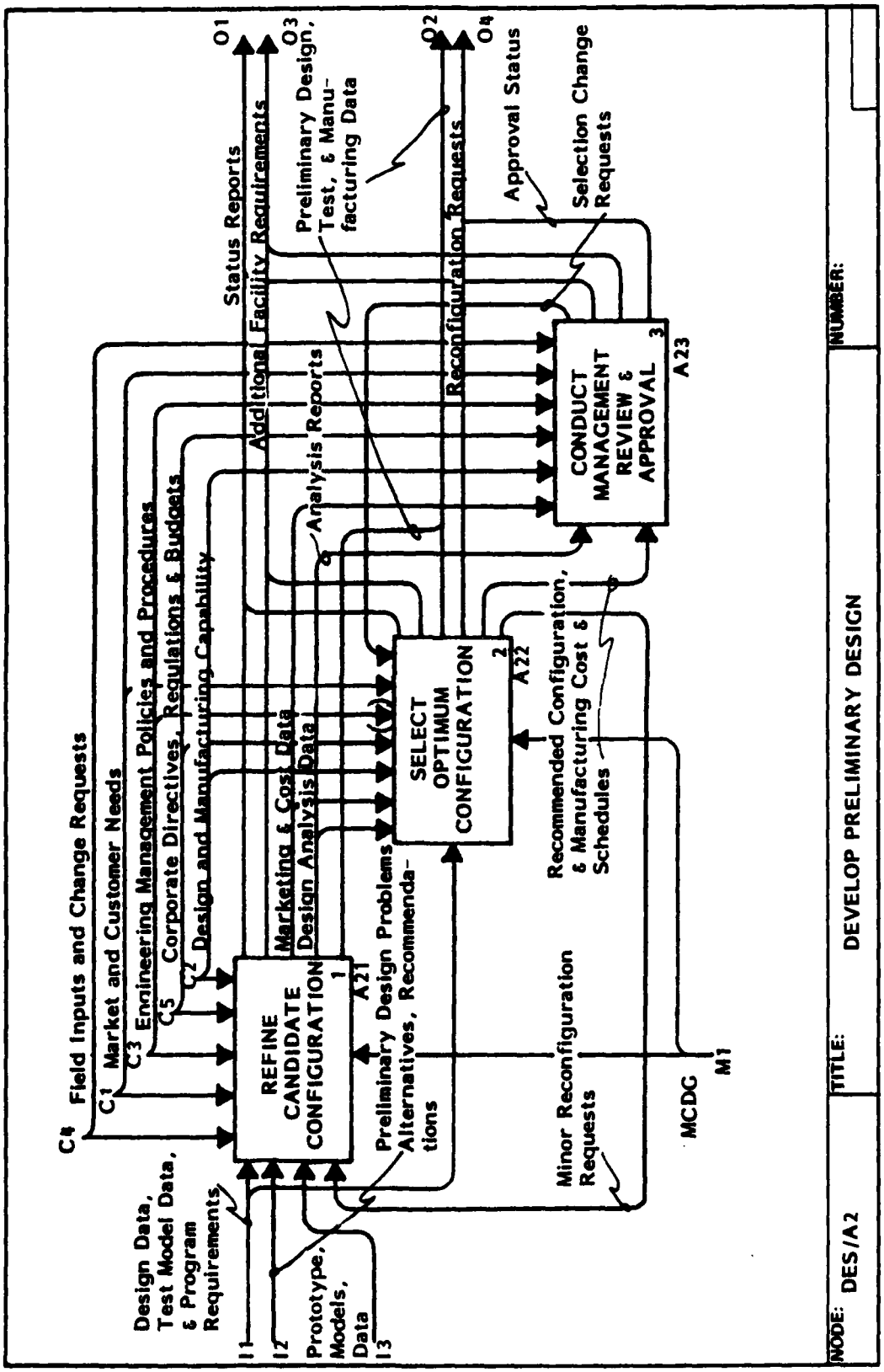
C4 Field Inputs and Change Requests
C1 Market and Customer Needs
C3 Engineering Management Policies and Procedures
C5 Corporate Directives, Regulations & Budgets
C2 Design and Manufacturing Capability
Design Data, Test Model Data, & Program Requirements
I1
I2
Prototype, Models, Data
I3
REFINE CANDIDATE CONFIGURATION
1
A21
Marketing & Cost Data
Design Analysis Data
Preliminary Design Problems
Alternatives, Recommendations
SELECT OPTIMUM CONFIGURATION
2
A22
Recommended Configuration, & Manufacturing Cost & Schedules
Minor Reconfiguration Requests
MCDG
M1
CONDUCT MANAGEMENT REVIEW & APPROVAL
3
A23
Approval Status
Selection Change Requests
Status Reports
O1
Additional Facility Requirements
O3
Analysis Reports
Preliminary Design, Test, & Manufacturing Data
Reconfiguration Requests
O2
O4
NODE: DES/A2
TITLE: DEVELOP PRELIMINARY DESIGN
NUMBER:

(A2 Glossary Continued)

Analysis Reports

Reports which will be used for reviews as well as to disclose the reasons why design solutions were chosen. The reports include information on mass properties, subsystem dynamics, structures and their testing, producibility, reliability, maintainability, and component testing.

Recommended Configuration and Manufacturing Cost and Schedules

The recommended configuration is the optimum design selected by Management. It also includes suggestions on how the configuration could be improved; manufacturing cost and schedules completely define the system and include, in addition to costs and schedules, test and producibility requirements.

Selection Change Requests

Alterations deemed mandatory by Management review before the design can be released to Detail Design.

Approval Status

Documented commitments and conditions from the appropriate level of Management to authorize the start of the Detail Design phase.

A21 REFINE CANDIDATE CONFIGURATIONS

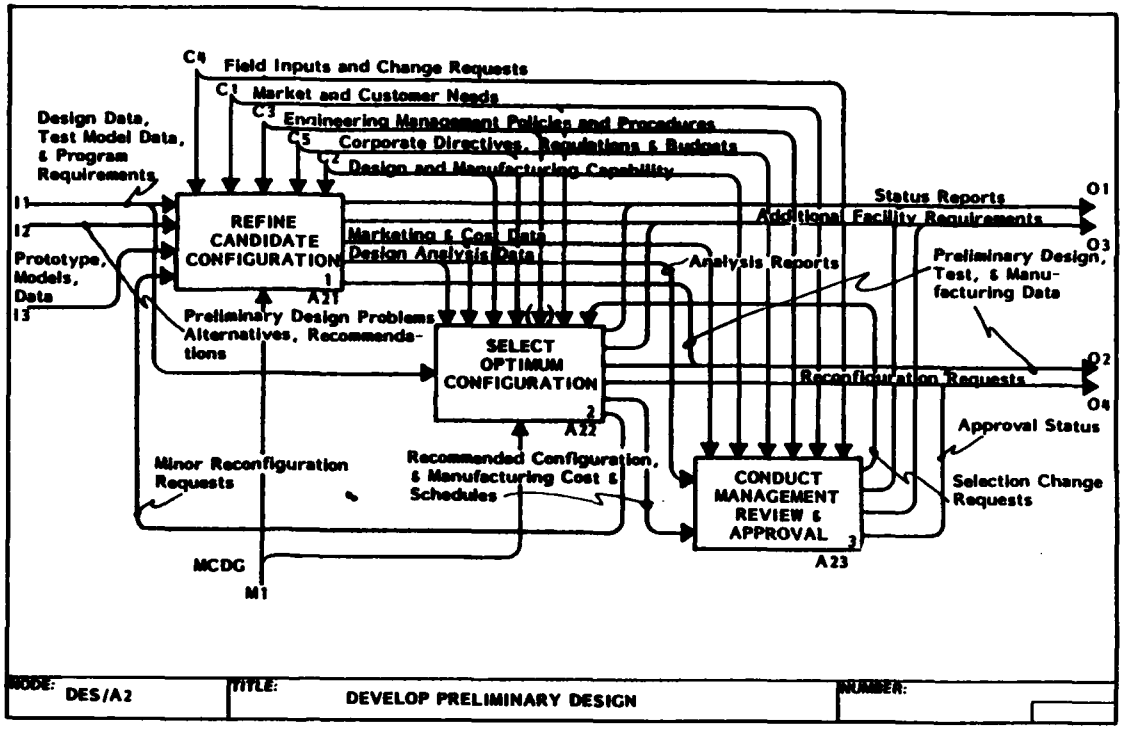

Box 1 – Uses information from Conceptual Design, test and other models, program requirements, prototypes, and recommmendations from Detail Design to refine the conceptual designs of the candidate configurations subject to external lines and requests for minor configurations.

Box 2 – Utilizes the design requirements from box 1 as well as other data from Conceptual Design to establish design solutions to subsystem requirements, perform subsystem and structural trade studies, define structural arrangements, which are iterated with the subsystem designs to assure compatibility, produce equipment layout and schematics, identify hardware and material lists, complete internal sizing, and identify structural test components. Sublevel allocations are made for reliability and maintainability. If there are any requests for alterations to this activity, the design requirements from the refined product configuration will have to be modified.

Box 3 – Employs the Preliminary Design requirements and layouts from box 2, in addition to data from Conceptual Design, prototypes, and models, to perform subsystem analyses. The activity places more emphasis on the design integration of the different disciplines and the exposed detail requirements. If there are any requests for changes to the information, the subsystem concepts would have to be refined.

Box 4 – Applies information from box 2, analysis reports from box 3, and data from Conceptual Design to evaluate the emerging design to derive new performance assessments. Recommended changes are directed to boxes 2 and 3 if the new design fails to meet performance goals or the trend indicates an inferior design.

Box 5 – Receives the performance reports from box 4, Preliminary Design requirements and layouts from box 2, and Conceptual Design data, which is utilized for the final development of can-

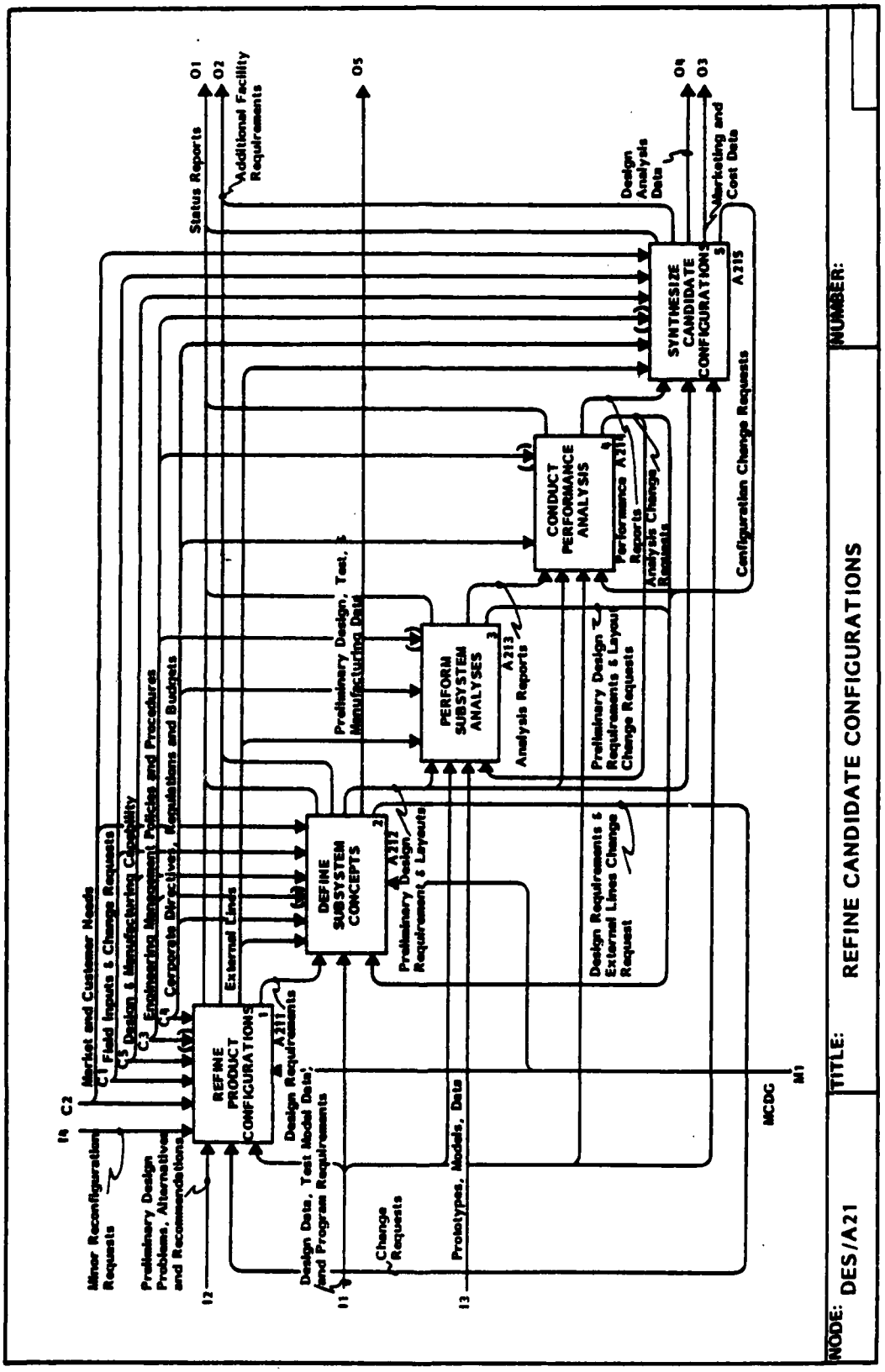
NODE: DES/A21
TITLE: REFINE CANDIDATE CONFIGURATIONS
NUMBER:
REFINE PRODUCT CONFIGURATIONS
1
A211
DEFINE SUBSYSTEM CONCEPTS
2
A212
PERFORM SUBSYSTEM ANALYSES
3
A213
CONDUCT PERFORMANCE ANALYSIS
4
A214
SYNTHESIZE CANDIDATE CONFIGURATIONS
5
A215
I1
I2
I3
I4
C1
C2
C3
C4
C5
O1
O2
O3
O4
O5
M1
MCDG
Minor Reconfiguration Requests
Preliminary Design Problems, Alternatives and Recommendations
Market and Customer Needs
Field Inputs & Change Requests
Design & Manufacturing Capability
Engineering Management Policies and Procedures
Corporate Directives, Regulations and Budgets
External Lines
Design Requirements
Design Data, Test Model Data, and Program Requirements
Change Requests
Prototypes, Models, Data
Preliminary Design, Test, & Manufacturing Data
Preliminary Design Requirement & Layouts
Analysis Reports
Preliminary Design Requirements & Layout Change Requests
Design Requirements & External Lines Change Request
Performance Reports
Analysis Change Requests
Configuration Change Requests
Status Reports
Additional Facility Requirements
Design Analysis Data
Marketing and Cost Data

(A21 Continued)

didate configurations reflecting all aspects of previously developed data. Sufficient Preliminary Design is accomplished to confirm and assure completeness of the performance and design requirements allocated for Detail Design. The outputs of the activity shall portray intra- and inter-system and item interfaces, permit traceability between the elements at various levels ot system detail, and provide a baseline for subsequent changes.

Glossary

External Lines

Mold line definition by engineering layouts and computer tapes.

Design Requirements

Updated product specifications and layout drawings in sufficient detail to allow definition of subsystems and structural arrangements. This includes identification of materials and types of construction for the major components.

Preliminary Design Requirements and Layouts

Documentation in the form of specifications, layouts, schematics, mathematical models, computer programs, data banks, automated drafting tapes, printouts, punched cards, test plans, and test procedures.

Performance Reports

Document performance achievement and disclose the degree (deficient, sufficient, or excessive) to which performance or contract goals are met.

A211 REFINE PRODUCT CONFIGURATIONS

Box 1 – Uses change requests, recommendations, data from Conceptual Design and test models, and program requirements to evaluate the configuration geometry for its ability to house, support, and manipulate the payload at optimum utilization, costs, and profit.

Box 2 – Examines the configuration geometry from box 1 in addition to other information to determine if, or to what degree, the design satisfies the basic function and/or subfunction requirements.

Box 3 – Utilizes the function evaluation results from box 2, the configuration geometry from box 1, Conceptual Design data, and change requests to expand the selected baseline data. This involves a more in-depth study of some feature(s) of the design.

Box 4 – Employs the selected data from box 3, the results from boxes 1 and 2, and other information to integrate and refine the geometry and configuration. From this, the candidate geometry and design configuration emerge.

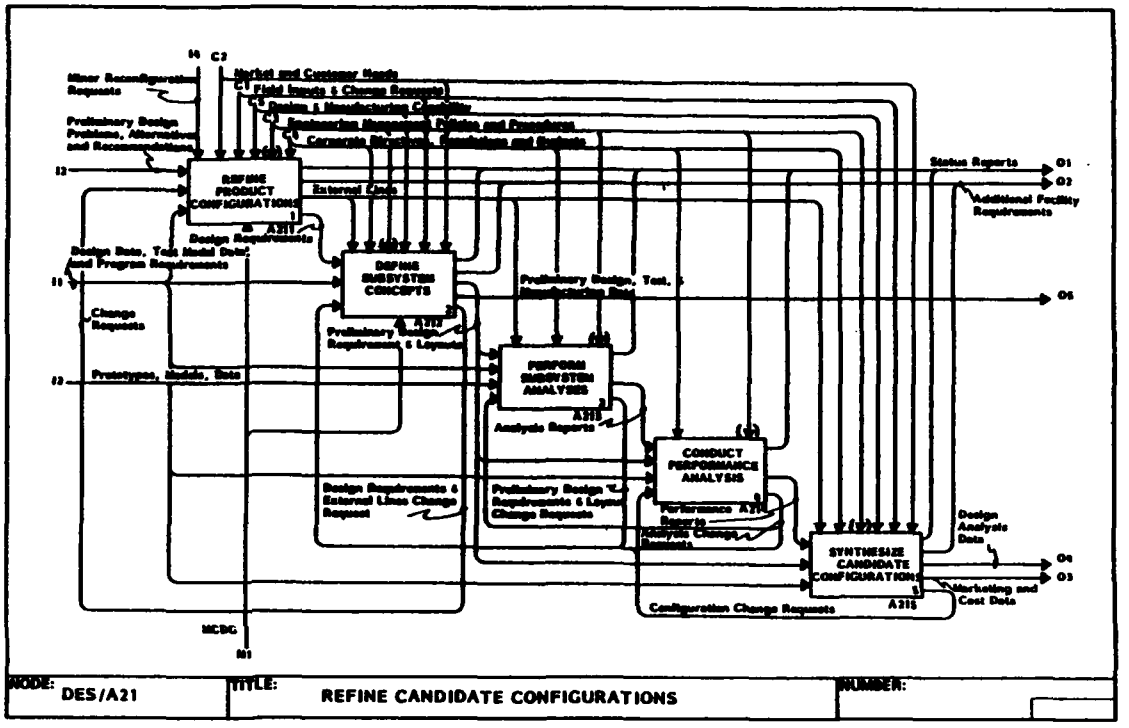

Glossary

Configuration Geometry

Evaluated descriptions of the geometry and configuration as well as the identification and definition of rough areas.

Function Evaluation Results

A statement as to the predicted effectiveness of the unit or assembly in question.

Selected Data

The results of in-depth studies of chosen design areas as to the effectiveness of their function or function controls.

FTR110410000U
8 September 1983

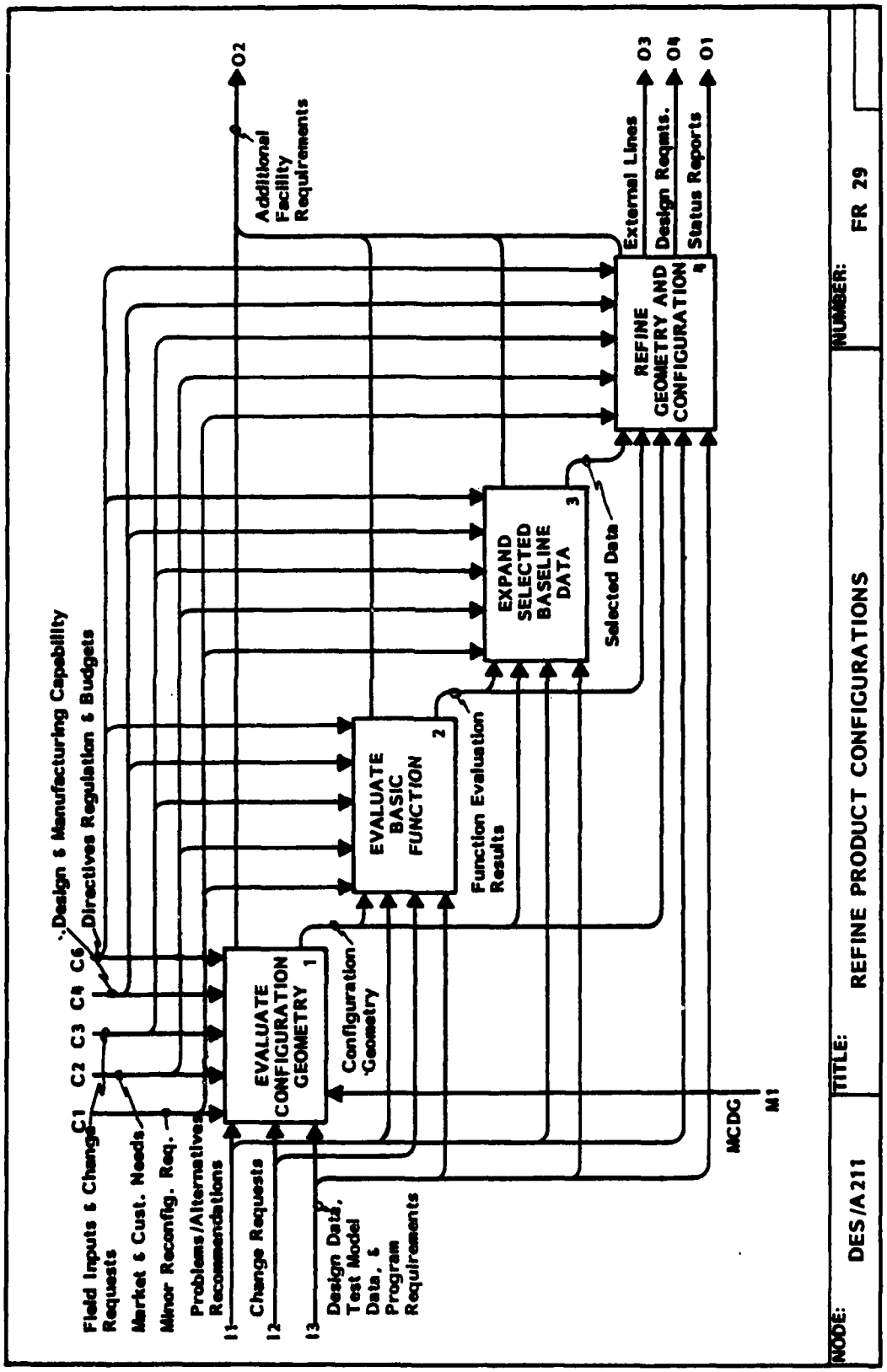
NODE: DES/A211
TITLE: REFINE PRODUCT CONFIGURATIONS
NUMBER: FR 29
Field Inputs & Change Requests
Market & Cust. Needs
Minor Reconfig. Req.
Problems/Alternatives Recommendations
Design & Manufacturing Capability
Directives Regulation & Budgets
C1 C2 C3 C4 C5
I1
I2
I3
Change Requests
Design Data, Test Model Data, & Program Requirements
EVALUATE CONFIGURATION GEOMETRY 1
Configuration Geometry
EVALUATE BASIC FUNCTION 2
Function Evaluation Results
EXPAND SELECTED BASELINE DATA 3
Selected Data
REFINE GEOMETRY AND CONFIGURATION 4
MCDC
M1
Additional Facility Requirements
O2
External Lines
Design Reqmts.
Status Reports
O3
O4
O1

A212 DEFINE SUBSYSTEM CONCEPTS

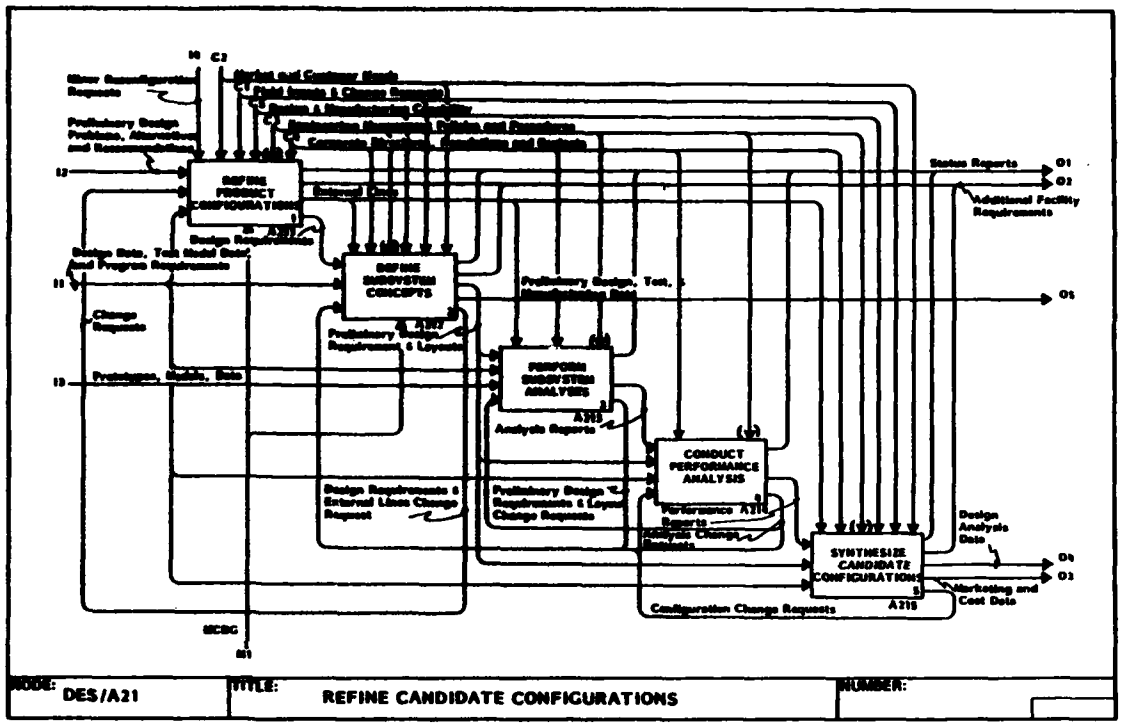

Box 1 – Design and program requirements as well as information from Conceptual Design and test models are used to determine the boundaries, extent, and nature of the subsystem requirements.

Box 2 – Utilizes change requests and other information to develop the schematics for the supporting systems of the configuration. This subsystem development concept is a general or broad definition/description of the subsystems which appears to be feasible at this study depth.

Box 3 – Employs the subsystem requirements from box 1 and the subsystem schematics from box 2, in addition to other data, to size the subsystems in order to perform the required function, carry the required loads, fit within the geometry limits, and fulfill such other requirements as fatigue resistance, environment, accessibility, and replaceability. Any problems which occur are referred to box 2 for resolution.

Box 4 – Applies the subsystem layouts from box 3, the subsystem requirements from box 2, design and program requirements, and data from Conceptual Design and test models to develop the subsystem interfaces. In this activity, the sized subsystem configuration is filled into the overall configuration from both the function and physical aspects. The filling may involve different kinds of forces, such as electrical, electronic, and hydraulic, as well as physical loads and space. Problems to be rectified are sent back to box 2.

Box 5 – Uses the subsystem layouts of the interfaces, the subsystem requirements, and other information as documentation for distribution to the using activities. Additional requests for alterations to the documentation as well as problems are fed back to the first activity where the subsystem requirements will be redefined.

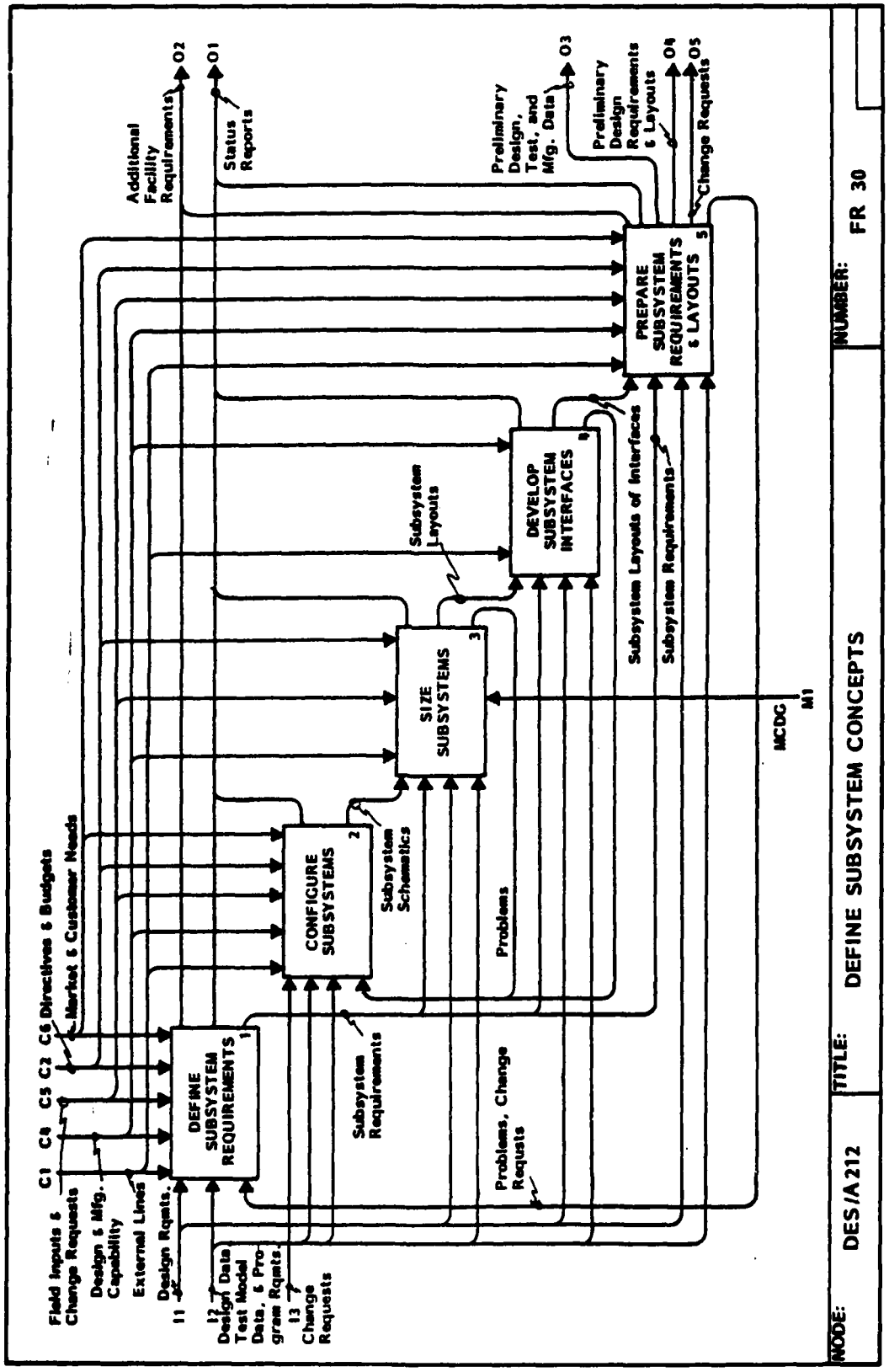
NODE: DES/A212
TITLE: DEFINE SUBSYSTEM CONCEPTS
NUMBER: FR 30
DEFINE SUBSYSTEM REQUIREMENTS 1
CONFIGURE SUBSYSTEMS 2
SIZE SUBSYSTEMS 3
DEVELOP SUBSYSTEM INTERFACES 4
PREPARE SUBSYSTEM REQUIREMENTS & LAYOUTS 5
C1 C4 C5 C2 C6 Directives & Budgets
Market & Customer Needs
Field Inputs & Change Requests
Design & Mfg. Capability
External Lines
Design Rqmts.
I1
I2 Design Data, Test Model Data, & Program Rqmts.
I3 Change Requests
Additional Facility Requirements
O2
Status Reports
O1
Subsystem Requirements
Subsystem Schematics
Problems
Problems, Change Requests
Subsystem Layouts
Subsystem Layouts of Interfaces
Subsystem Requirements
Preliminary Design, Test, and Mfg. Data
O3
Preliminary Design Requirements & Layouts
O4
Change Requests
O5
MCDC
M1

(A212 Continued)

Glossary

Subsystem Requirements

Include the physical, functional, and structural requirements of each subsystem and its components. The subsystems may be structural, mechanical, electrical, or hydraulic.

Subsystem Schematics

The arrangement of the parts, form, figure, or sequence of operations.

Subsystem Layouts

The preliminary drawings of the subsystem configuration.

Subsystem Layouts of Interfaces

The preliminary drawings of the subsystem configuration with its attachments, mating surfaces, and mating systems.

A213 PERFORM SUBSYSTEM ANALYSES

Box 1 – Uses Preliminary Design requirements, layouts, program requirements, and information from Conceptual Design, test models, and prototypes and models to analyze the subsystem design for anticipated performance in fulfilling the design requirements.

Box 2 – Utilizes Conceptual Design, Preliminary Design, and other information to examine the subsystem design for space and weight effectiveness.

Box 3 – Employs data from Conceptual and Preliminary Design as well as other sources and analyzes the subsystem design for its compatibility with or degree of disruption of the mating and/or supporting subsystem(s).

Box 4 – Applies the aforementioned models and design information in examining the subsystem design for initial and lifetime (initial plus maintenance and/or replacement) costs.

Box 5 – Uses the subsystem performance from box 1, the subsystem size and weight from box 2, the subsystem interface from box 3, and the subsystem cost from box 4 to document the subsystem analyses. The major end product, analysis reports, gives the results.

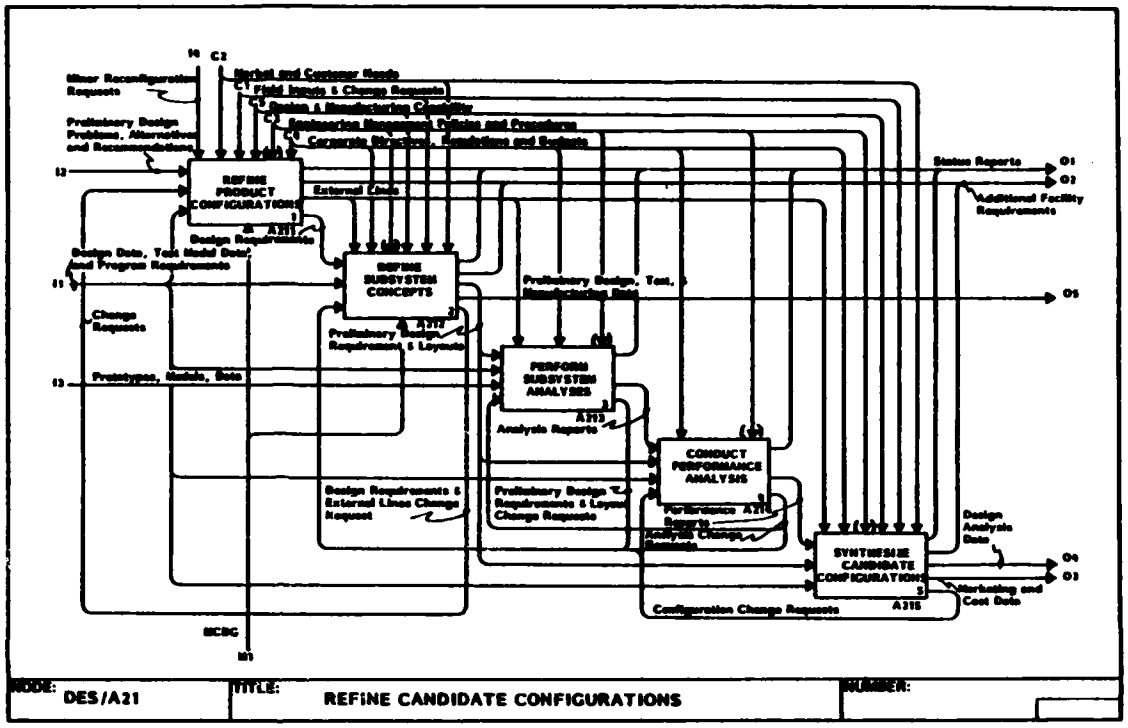

Glossary

Subsystem Performance

A summary of the performance of the subsystem as configured. This includes capacity, frequency, life, reliability, and redundancy.

Subsystem Size and Weight

The geometry, capacity, and physical weight of the subsystem.

Subsystem Interface

The mating areas of the system for its function and support.

Subsystem Cost

The dollar value cost of the subsystem itself per unit or contract.

FTR110410000U
8 September 1983

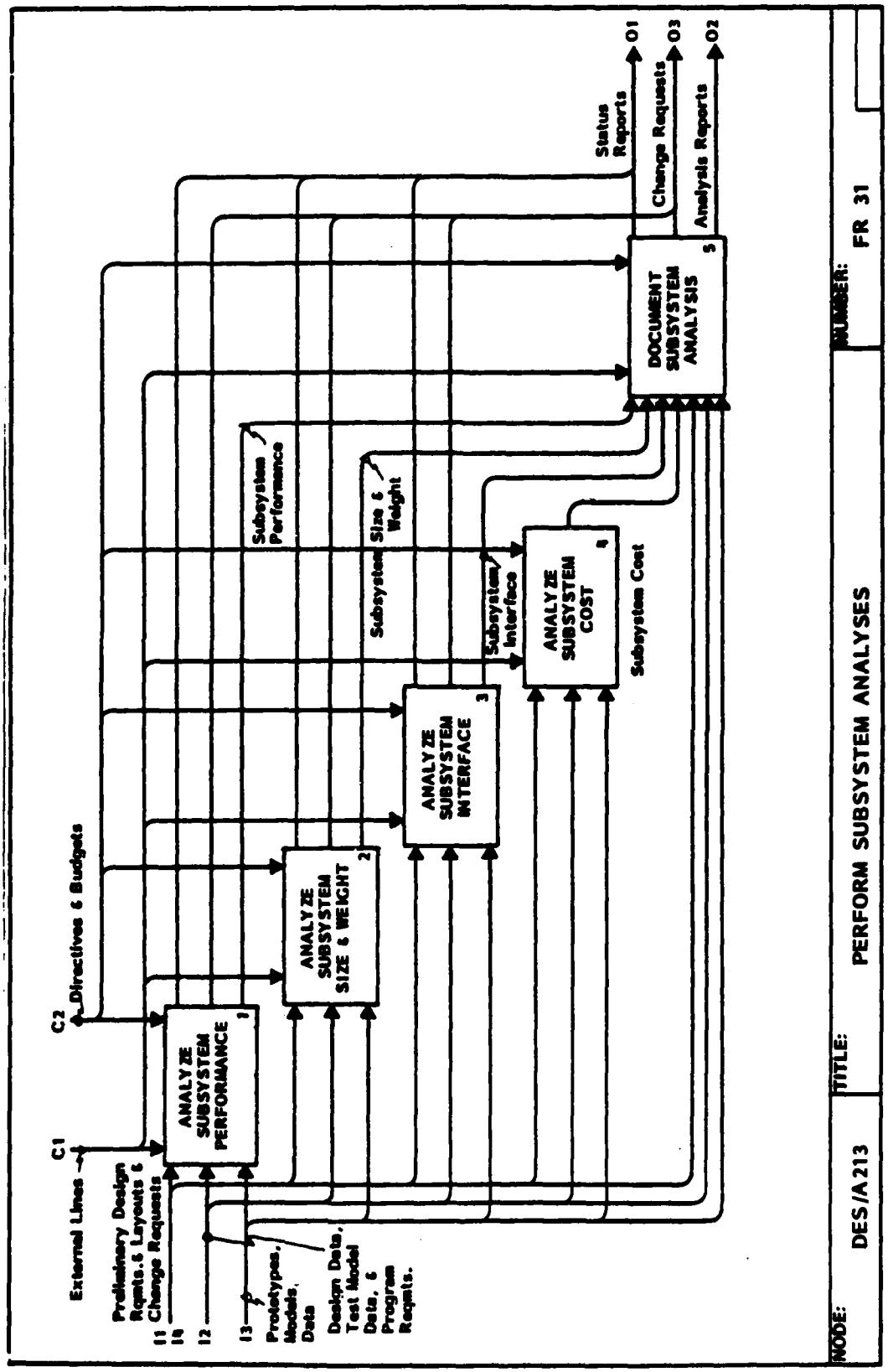
C1
External Lines
C2
Directives & Budgets
Preliminary Design Rqmts.& Layouts & Change Requests
I1
I4
I2
I3
Prototypes, Models, Data
Design Data, Test Model Data, & Program Rqmts.
ANALYZE SUBSYSTEM PERFORMANCE
1
ANALYZE SUBSYSTEM SIZE & WEIGHT
2
ANALYZE SUBSYSTEM INTERFACE
3
ANALYZE SUBSYSTEM COST
4
DOCUMENT SUBSYSTEM ANALYSIS
5
Subsystem Performance
Subsystem Size & Weight
Subsystem Interface
Subsystem Cost
Status Reports
Change Requests
Analysis Reports
O1
O3
O2
NODE:
DES/A213
TITLE:
PERFORM SUBSYSTEM ANALYSES
NUMBER:
FR 31

A214 CONDUCT PERFORMANCE ANALYSIS

Box 1 – Uses analysis reports, Preliminary Design requirements and layouts, change requests, program requirements, and information from Conceptual Design and test models in the analysis of the conglomerate of the systems and subsystems. From this, a predicted composite mission is prepared.

Box 2 – Utilizes the mission performance from box 1 as well as other information to define the performance potentials. This consists of an analysis which uses the performance ranges of the systems and subsystems that make up the overall units. Moreover, alternate missions or capabilities make the product more versatile to the customer and more desirable to a greater portion of the marketplace.

Box 3 – Employs the performance potentials from box 2, the results from box 1, and additional data to compare the design mission with the estimated performance and profits which analyses indicate are potentially available. The information is used by Management for project "go-ahead" decisions and for sales promotion. In the event that the estimated performance falls short of the target, the data will result in a change request directed to further design refinement or redesign dependent upon the magnitude of the discrepancy.

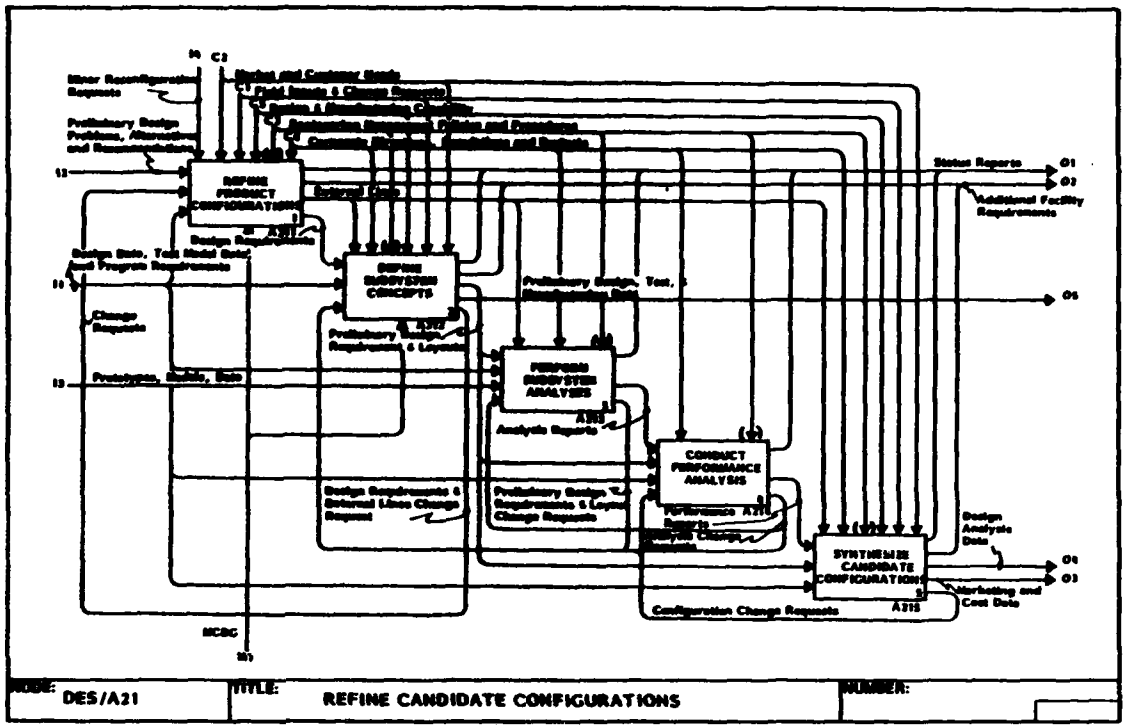

Box 4 – Applies the comparison mission vs performance, change requests, and the results from the first 2 activities to prepare the performance reports. The reports contain a comparison of the mission target base to the potential performance and profit, schedule milestones, and highlights of marginal and exceptional design areas.

Glossary

Mission Performance

A specification listing the performance goals for the design task.

Performance Potentials

A prediction or estimate of the possible/probable performance as indicated by preliminary designs.

Comparison Mission Versus Performance

The comparisons of the estimated performance to the mission target.

FTR110410000U
8 September 1983

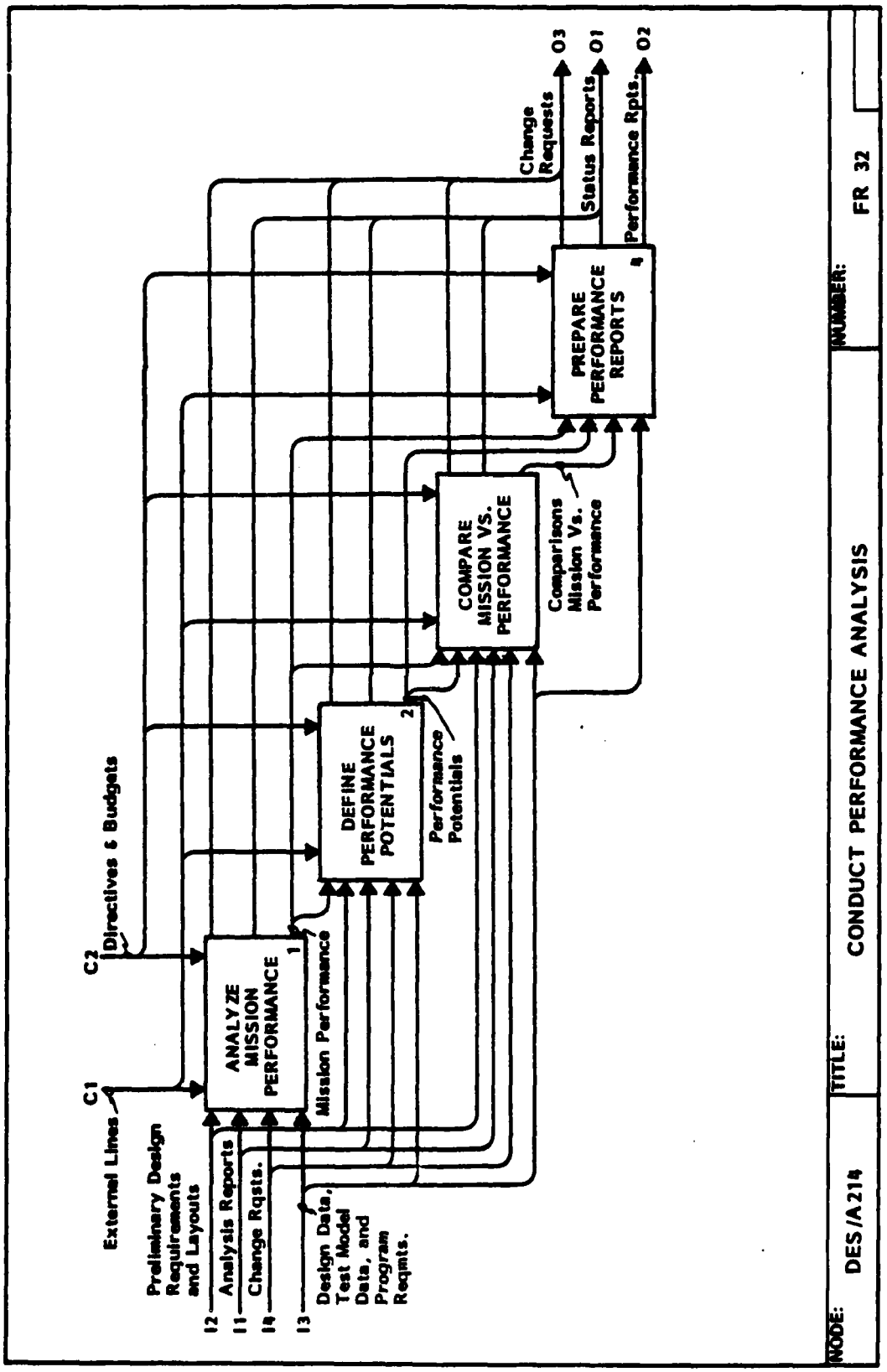
C1
External Lines
C2
Directives & Budgets
I2
Preliminary Design Requirements and Layouts
I1
Analysis Reports
I4
Change Rqsts.
I3
Design Data, Test Model Data, and Program Reqmts.
ANALYZE MISSION PERFORMANCE
1
Mission Performance
DEFINE PERFORMANCE POTENTIALS
2
Performance Potentials
COMPARE MISSION VS. PERFORMANCE
Comparisons Mission Vs. Performance
PREPARE PERFORMANCE REPORTS
4
O3
Change Requests
O1
Status Reports
O2
Performance Rpts.
NODE:
DES/A214
TITLE:
CONDUCT PERFORMANCE ANALYSIS
NUMBER:
FR 32

A215 SYNTHESIZE CANDIDATE CONFIGURATIONS

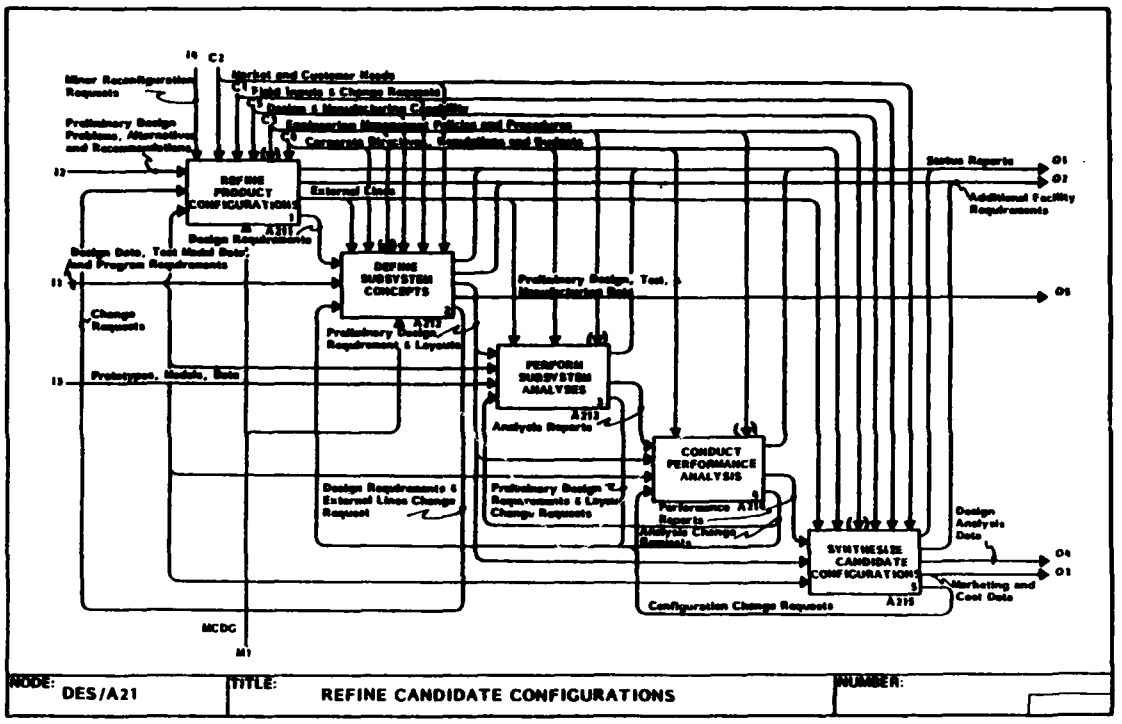

Box 1 – Utilizes data from Conceptual Design and test models, performance reports, Preliminary Design requirements and layouts, and program requirements to verify the completeness of the performance design and test requirements. The mission requirements are studied and interpreted, while the effects and interaction on each subsystem are identified, described, and documented. In addition, tests are reviewed for accuracy in representing the real article in an authentic environment. This activity produces the Preliminary Design baseline data which might require substantial changes before its deemed acceptable, design refinement for approval, or designs that may be synthesized in their existing configuration.

Box 2 – Uses the Preliminary Design data baseline from box 1 to verify the compatibility of interfaces between: structures, systems, and structures and systems. The interfaces may involve geometry, function, and loads.

Box 3 – Employs the compatible design solutions from box 2 and the results from box 1 to synthesize candidate systems and system elements. In this activity, design segments are brought together to define the complete product. Structures are joined to other structures and substructures while systems are connected to subsystems, structures, and other systems. The kinematics of mechanisms and the control and operating power needed and available are synthesized until all elements making up the total configuration are involved and viewed in both static and dynamic states. In addition, the function determines whether the product as designed will perform the mission, if the user can profitably utilize the product, and if there are enough users in the marketplace to warrant its production. Any problems and requests for interface or other information are transmitted for resolution to boxes 1 and 2, respectively.

Box 4 – Applies the configuration synthesis to document its results. Also included in this documentation are the design mission and change requests. The

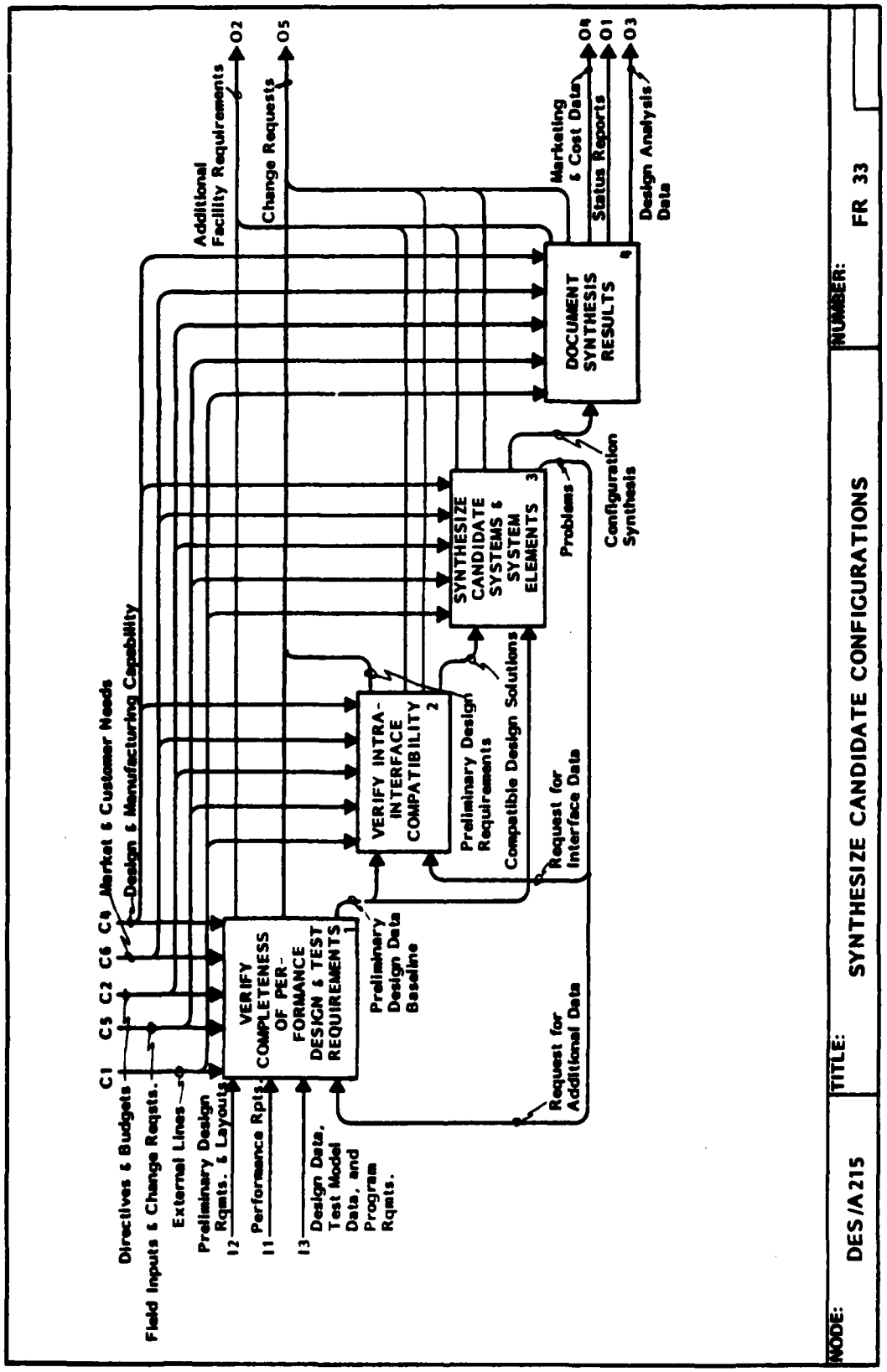
C1
C5
C2
C6
C4
Directives & Budgets
Field Inputs & Change Reqsts.
External Lines
Preliminary Design Rqmts. & Layouts
Performance Rpts
Design Data, Test Model Data, and Program Rqmts.
I2
I1
I3
Market & Customer Needs
Design & Manufacturing Capability
VERIFY COMPLETENESS OF PER-FORMANCE DESIGN & TEST REQUIREMENTS 1
Preliminary Design Data Baseline
VERIFY INTRA-INTERFACE COMPATIBILITY 2
Preliminary Design Requirements
Compatible Design Solutions
Request for Interface Data
Request for Additional Data
SYNTHESIZE CANDIDATE SYSTEMS & SYSTEM ELEMENTS 3
Problems
Configuration Synthesis
DOCUMENT SYNTHESIS RESULTS 4
Additional Facility Requirements
Change Requests
Marketing & Cost Data
Status Reports
Design Analysis Data
O2
O5
O4
O1
O3
NODE:
DES/A215
TITLE:
SYNTHESIZE CANDIDATE CONFIGURATIONS
NUMBER:
FR 33

(A215 Continued)

results are in detail and will be used to reinforce future decisions such as "go-ahead", revise, and cancel project.

Glossary

Preliminary Design Data Baseline

Drawings and information which describe the product capable of fulfilling the fundamental requirements.

Compatible Design Solutions

Designs of structures, systems, or subsystems which are congruous (physically, functionally, and dynamically) with interface designs.

Requests for Interface Data

Completes or amplifies the synthesis documentation.

Configuration Synthesis

The bringing together of all elements which make up the configuration. These elements are involved and viewed in both static and dynamic states.

Preliminary Design Requirements -

See Glossary A21

A22 SELECT OPTIMUM CONFIGURATION

Box 1 – Employs data from designs, test models, and program requirements, as well as recommended changes from box 3, to make a comparison of candidate configurations. This is accomplished by evaluating each of the configurations and stating the rationale of the assessment.

Box 2 – Uses the evaluation reports from box 1 and the Conceptual Design data to rank the configuration for optimum performance and cost. The recommended configuration is the result of this activity. If any problems arise, the candidate configurations will have to be reevaluated.

Box 3 – Utilizes the information from Conceptual Design to finalize the optimum product design based on manufacturing capability, technical excellence, cost and schedules, marketing information, and company policies subject to the recommended configuration. As a result of this activity, there might be requests for minor reconfiguration.

Box 4 – Applies the system definition from box 3 to verify the recommended design and requirements. The verification is accomplished by tests, simulations, and analyses that are within the program scope.

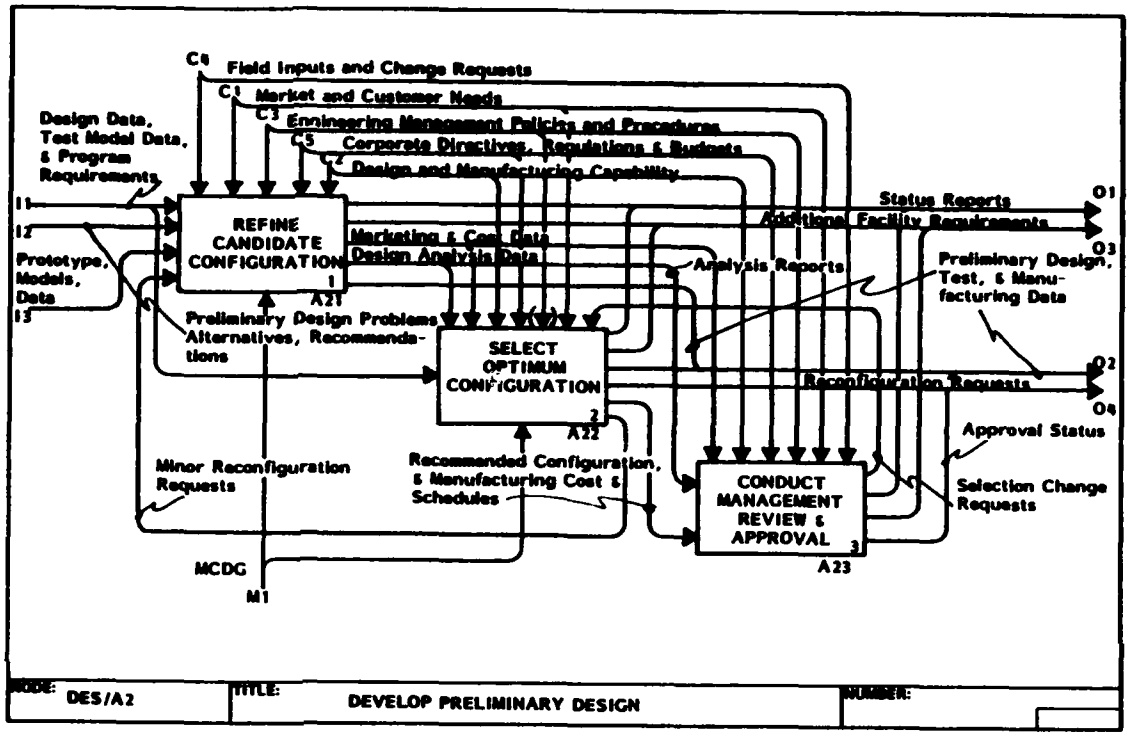

In addition, conclusions made during the early part of the Preliminary Design phase are validated.

Box 5 – Transforms the manufacturing cost and schedules and the verified system definition into documentation of the selection process and results. The reason for this is to record all program information in a form usable for decision making. In addition, the documentation could be used as a baseline for continued development.

Glossary

Evaluation Reports

Summarize and compare like parameters of each design and conduct trade studies to document relative merits. They cover all considerations available at this stage.

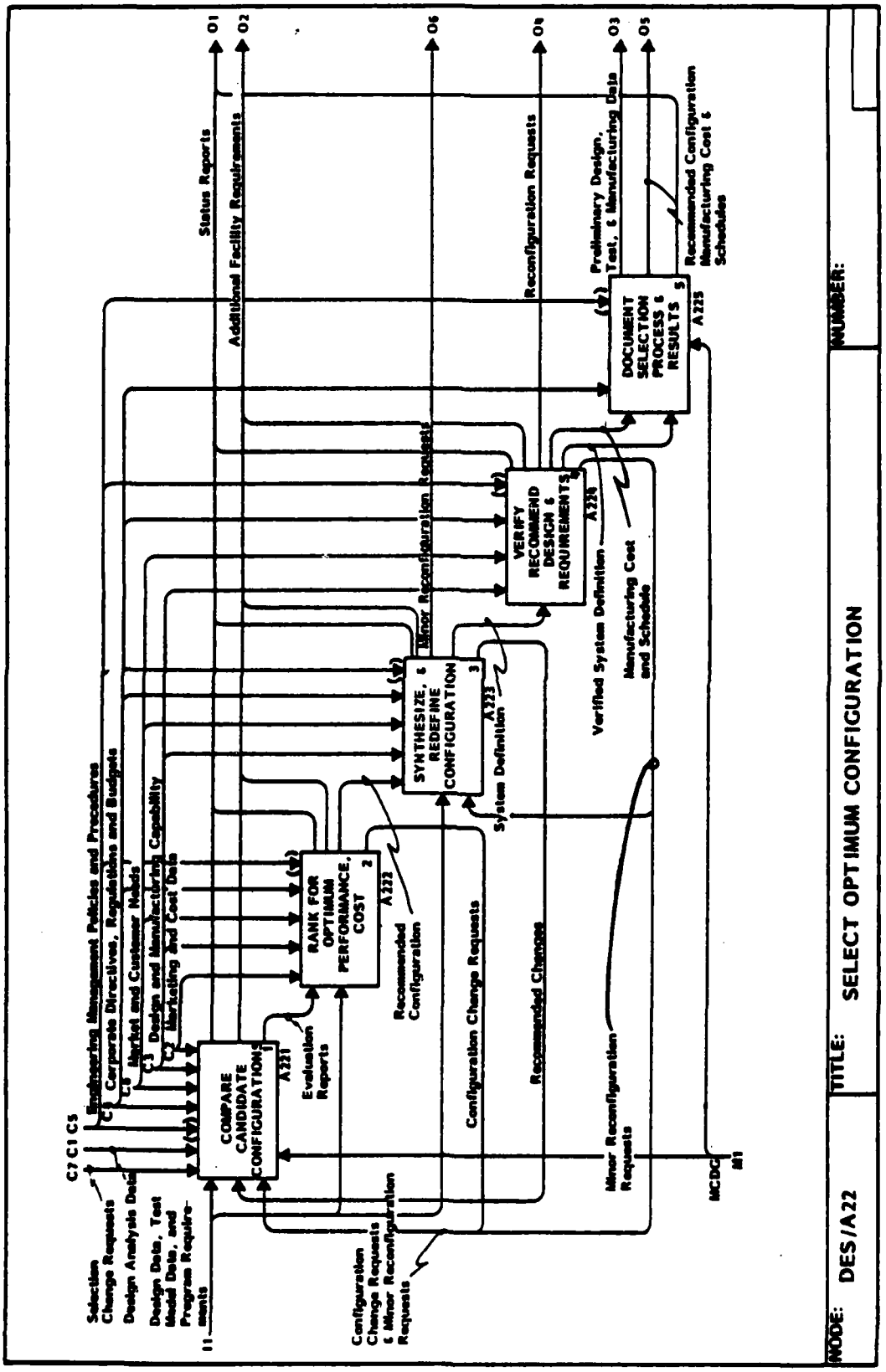
NODE: DES/A22
TITLE: SELECT OPTIMUM CONFIGURATION
NUMBER:
COMPARE CANDIDATE CONFIGURATIONS
A221
RANK FOR OPTIMUM PERFORMANCE, COST
A222
SYNTHESIZE, & REDEFINE CONFIGURATION
A223
VERIFY RECOMMEND DESIGN & REQUIREMENTS
A224
DOCUMENT SELECTION PROCESS & RESULTS
A225
Selection Change Requests
Design Analysis Data
Design Data, Test Model Data, and Program Requirements
Engineering Management Policies and Procedures
Corporate Directives, Regulations and Budgets
Market and Customer Needs
Design and Manufacturing Capability
Marketing and Cost Data
Configuration Change Requests & Minor Reconfiguration Requests
Evaluation Reports
Recommended Configuration
Configuration Change Requests
Recommended Changes
Minor Reconfiguration Requests
Minor Reconfiguration Requests
System Definition
Verified System Definition
Manufacturing Cost and Schedule
Status Reports
Additional Facility Requirements
Reconfiguration Requests
Preliminary Design, Test, & Manufacturing Data
Recommended Configuration Manufacturing Cost & Schedules
MCDC
M1

(A22 Glossary Continued)

Recommended Configuration

Documentation which covers the assessment of merit of each configuration and the rationale behind each assessment.

System Definition

Complete description of the Preliminary Design of a particular system.

Recommended Changes

Suggestions to alter or recollate the candidate configurations.

Manufacturing Cost and Schedule

Information on various manufacturing processes, based on Conceptual Design data, to improve the ability to manufacture economically.

Verified System Definition

Includes layouts and detail drawings in 2 and 3 views which prove the feasibility of the design. Subsystem descriptions are also printed and drawn.

A221 COMPARE CANDIDATE CONFIGURATIONS

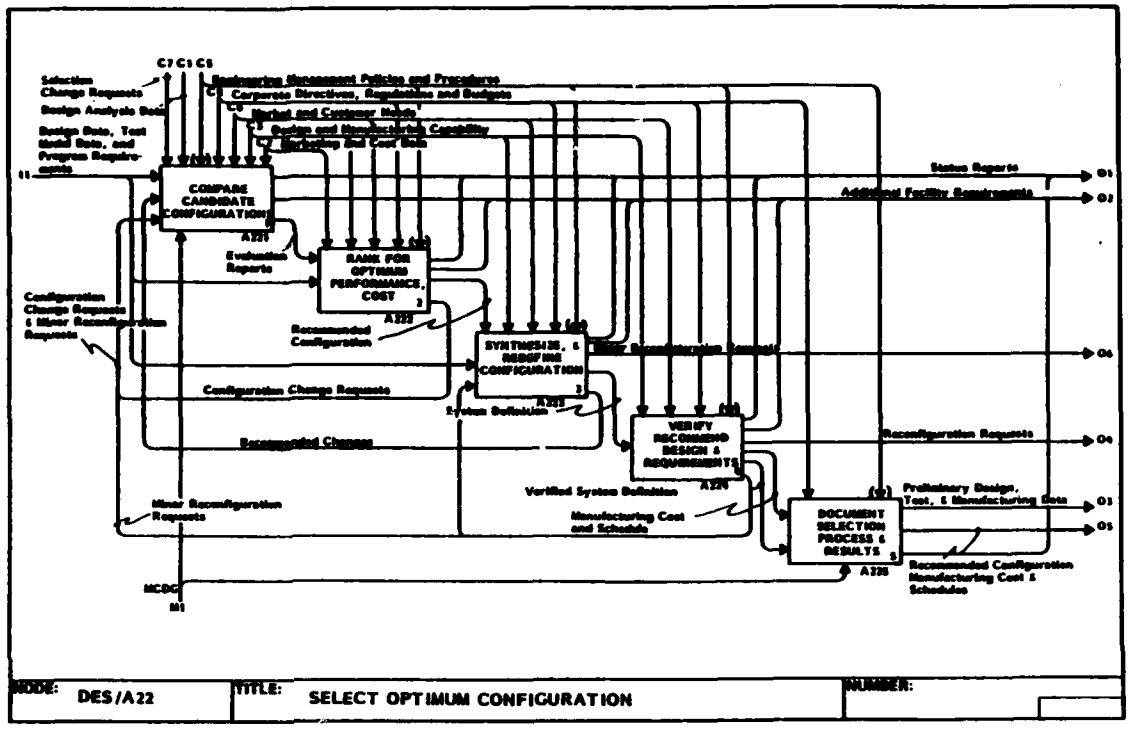

Box 1 – Uses change requests, program requirements, and information from Conceptual Design and test models to establish comparative parameters and standards. This is accomplished by determining a set of criteria against which judgments can be formed for the particular program. The major parameters, such as takeoff and landing requirements, range, speed, maneuverability, loiter capability and payload, are broken down into weight, thrust-to-weight ratio, engine cycle, wing loading, and wetted surface. Moreover, standards are developed for a range of achievable values for each parameter.

Box 2 – Utilizes applicable parameters, standards, and ranking values from box 1, recommended changes, and other information from Conceptual Design to conduct trade studies. In this activity, a matrix of design trades is developed where the system parameters are individually varied to determine the sensitivity of each on the candidate configurations.

Box 3 – Employs the requirement sensitivity matrix from box 2 as well as data relating to Conceptual Design to evaluate and assess the comparison results and present the findings in comprehensive evaluation reports. The reports are adequate to conduct cost-effective analyses.

Glossary

Applicable Parameters, Standards, and Ranking values

Applicable parameters are selected design and performance parameters based on system requirements. They are used for further refinement to the design/development process; design standards are developed to assist in achieving the established optimum goals; ranking values deal with the reviewing of the candidate configurations to select the final design concept which will proceed into the Detail Design phase.

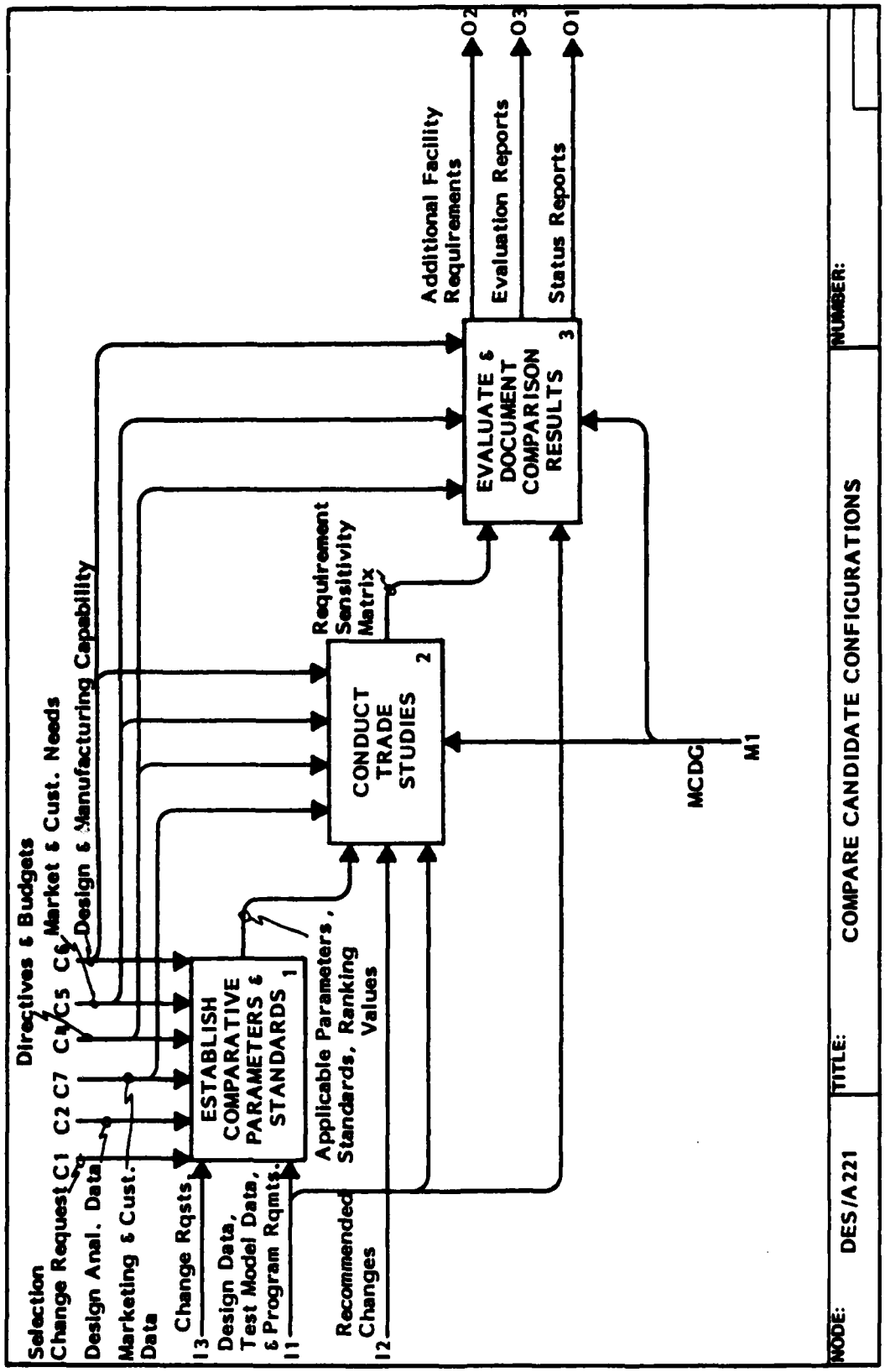
Selection
Change Request C1
Design Anal. Data
Marketing & Cust. Data
C2 C7
C5 C6
Directives & Budgets
Market & Cust. Needs
Design & Manufacturing Capability
I3
Change Rqsts
I1
Design Data, Test Model Data, & Program Rqmts.
ESTABLISH COMPARATIVE PARAMETERS & STANDARDS 1
Applicable Parameters, Standards, Ranking Values
I2
Recommended Changes
CONDUCT TRADE STUDIES 2
Requirement Sensitivity Matrix
MCDG
M1
EVALUATE & DOCUMENT COMPARISON RESULTS 3
Additional Facility Requirements
O2
Evaluation Reports
O3
Status Reports
O1
NODE:
DES/A221
TITLE:
COMPARE CANDIDATE CONFIGURATIONS
NUMBER:

(A221 Glossary Continued)

Requirement Sensitivity Matrix

Depicts alternate design approaches that are all able to meet program technical objectives. It also illustrates the potential impact on each alternative when exposed analytically to the applicable performance criteria.

A222 RANK FOR OPTIMUM PERFORMANCE, COST

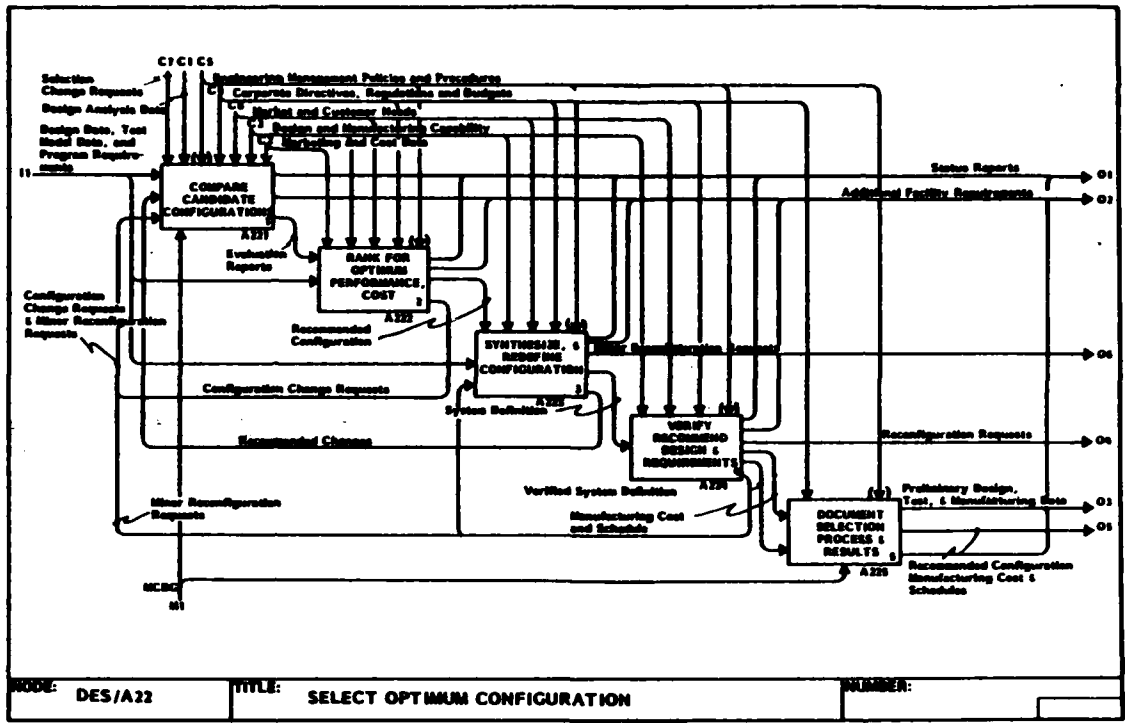

Box 1 – Uses evaluation reports, program requirements, and data from Conceptual Design and test models in updating effectiveness models which are to relate to the specific program under consideration.

Box 2 – Applies the same data used by box 1 to conduct effectiveness analysis on candidate configurations and systems subject to the revised models. Any recommended model changes are sent back to the first activity.

Box 3 – Utilizes design-to-cost, cost/effectiveness life cycle costs, and figures of merit from box 2 as well as additional data in documenting the significant results of the analysis in identifying the most promising concepts as well as the rationale for rejected concepts.

Glossary

Revised Models

Used in the design process to formulate concepts and are corrected to incorporate requirements peculiar to the program under consideration. As a result, alternate concepts which are capable of meeting program technical objectives are established.

Recommended Model Changes

Evolve as a result of the selection process to arrive at an optimum configuration. They are incorporated into the effectiveness models to further enhance their capability as useful tools in the design process.

Design to Cost/Cost Effectiveness Life Cycle Costs, and Figures of Merit

Criteria used in the reviewing of candidate configurations to determine if the design will satisfy program technical requirements and is within anticipated costs prior to committing to the Detail Design phase.

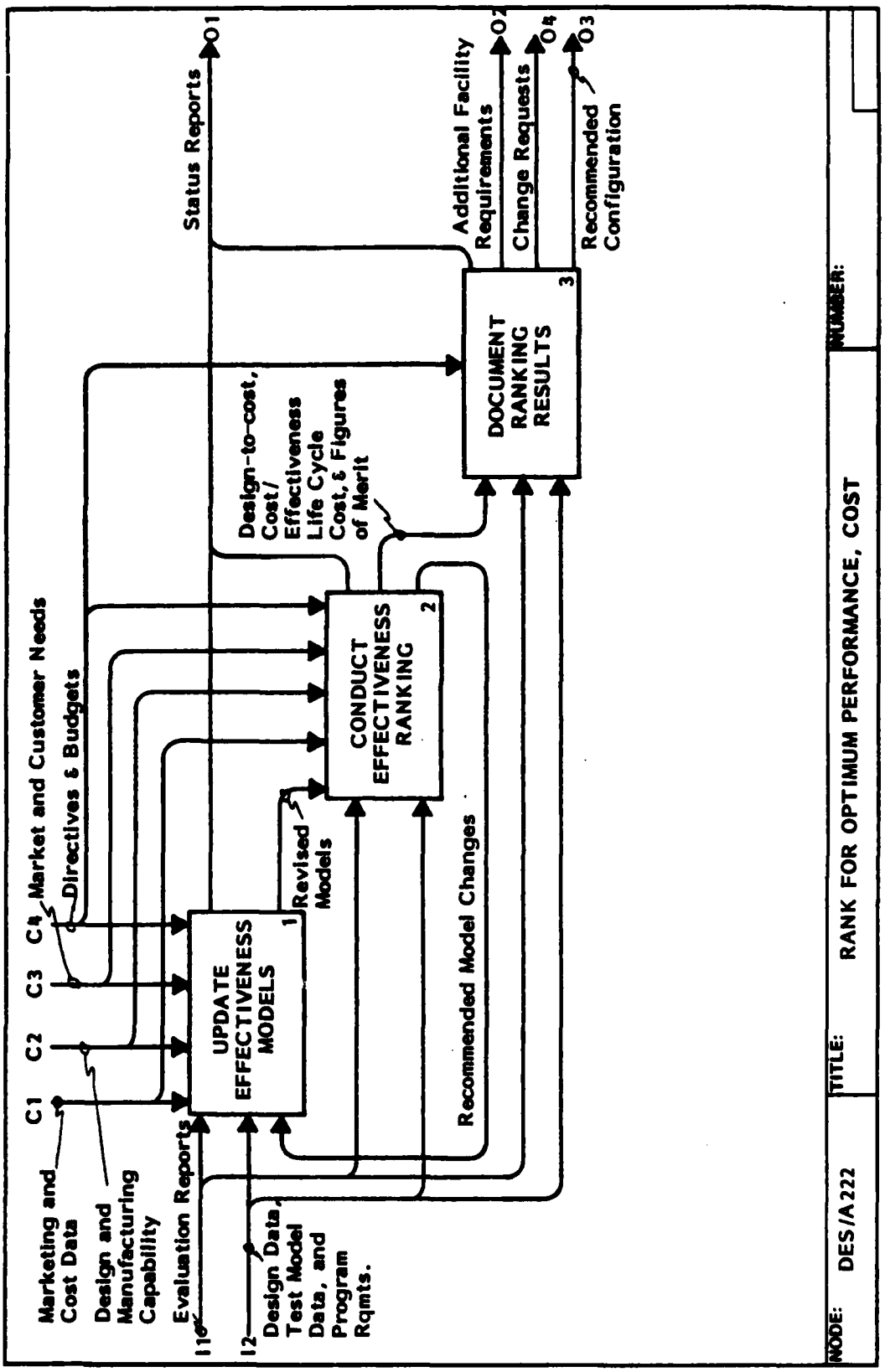
C1
C2
C3
C4
Market and Customer Needs
Directives & Budgets
Marketing and Cost Data
Design and Manufacturing Capability
Evaluation Reports
I1
I2
Design Data, Test Model Data, and Program Rqmts.
UPDATE EFFECTIVENESS MODELS
1
Revised Models
CONDUCT EFFECTIVENESS RANKING
2
Recommended Model Changes
Design-to-cost, Cost/ Effectiveness Life Cycle Cost, & Figures of Merit
DOCUMENT RANKING RESULTS
3
Status Reports
O1
Additional Facility Requirements
O2
Change Requests
O4
Recommended Configuration
O3
NODE:
DES/A 222
TITLE:
RANK FOR OPTIMUM PERFORMANCE, COST
NUMBER:

A223 SYNTHESIZE AND REDEFINE CONFIGURATION

Box 1 – Uses minor reconfiguration requests, program requirements, and Conceptual Design and test model information to review and organize data. In this activity, the tasks necessary to produce an optimum product development are determined. The task assignments and data are provided to the responsible groups for accomplishment.

Box 2 – Utilizes the results of box 1 as well as other information to perform synthesis and resizing. This is accomplished by scaling geometry, weight, and propulsion characteristics or the combination of parameters that have been dictated by effectiveness analysis of optimum parameter values.

Box 3 – Employs the evaluation results from box 2 and information from Conceptual Design to assess intra-system and inter-system compatibility. This involves an increased depth of investigation to assure agreement between structures and subsystems as well as among all subsystems. Major equipment relocations, penalizing arrangements, or irreconcilable conflicts are iterated to provide solutions. In addition, recommended changes are sent back to box 2 if the resizing is beyond scaling laws.

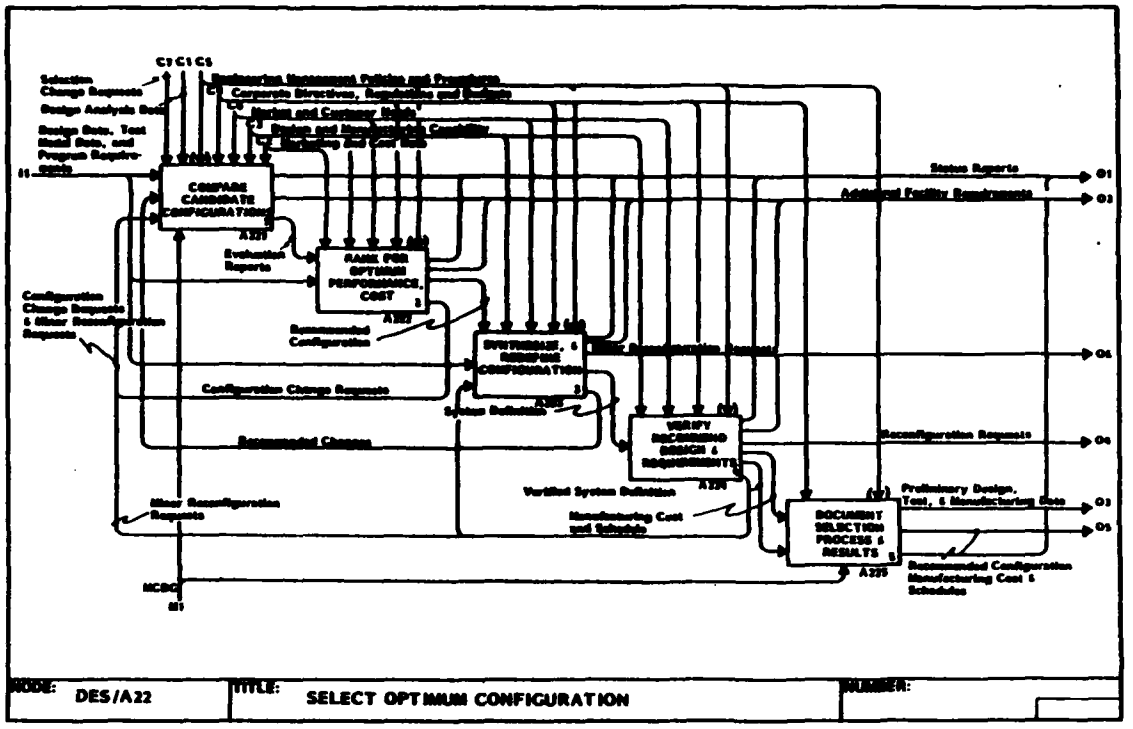

Box 4 – Applies the redefined configuration and integrated test plan from box 3, in addition to other information, to document the results of the configuration redefinition as well as the rationale for rejected concepts based on the recommendation, directives, and budgets. Minor reconfiguration requests and recommended changes are iterated for solutions.

Glossary

Task Assignments and Data

The data or information source of everything needed to perform the design job delegated. The Project Engineer provides the data, which includes preliminary designs, corporate and federal directives, design philosophy, schedules, and production interfaces, to the assigned Design Engineer over each portion of the project.

FTR110410000U
8 September 1983

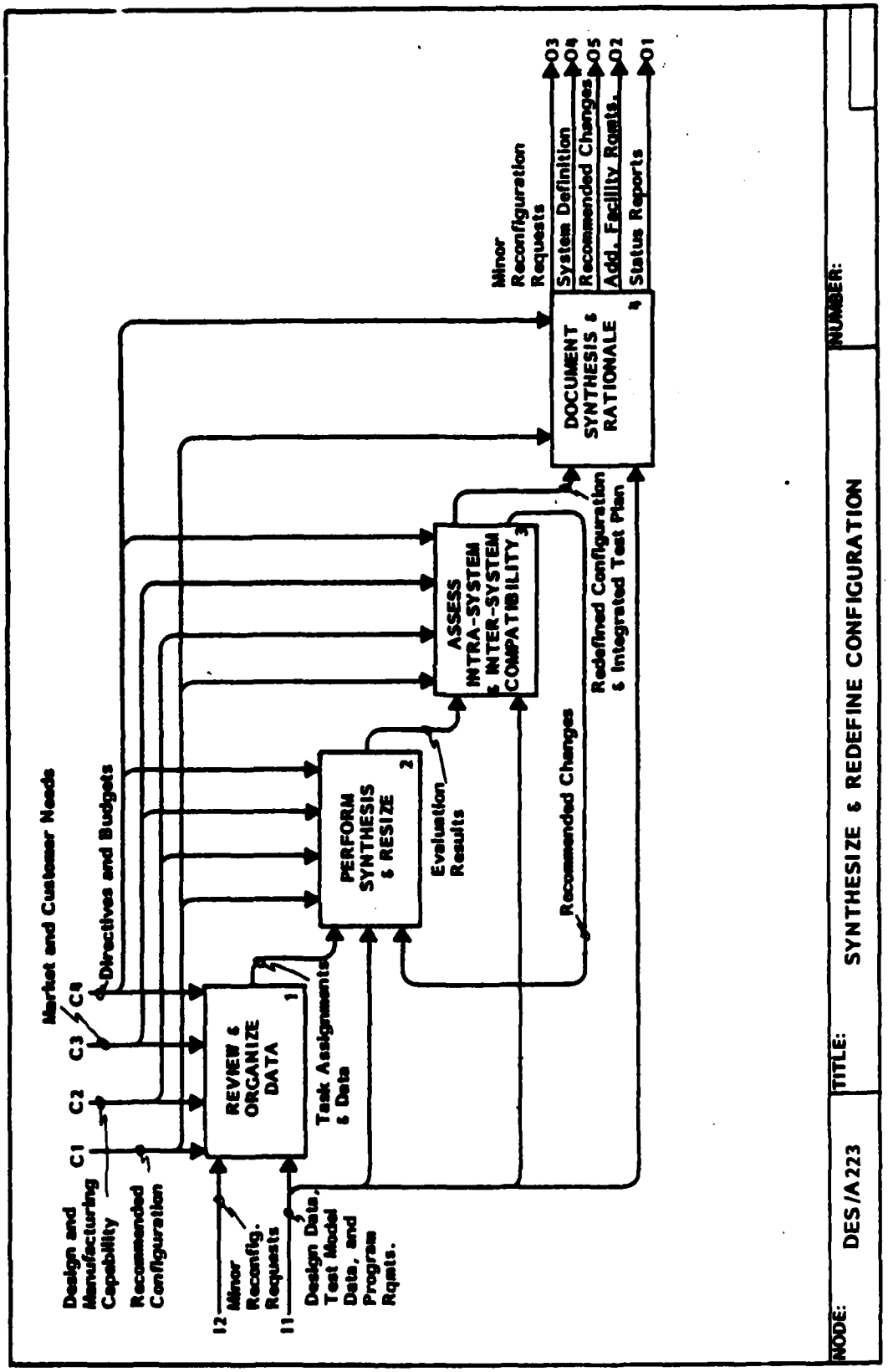
Market and Customer Needs
C4
C3
C2
C1
Directives and Budgets
Design and Manufacturing Capability
Recommended Configuration
I2
Minor Reconfig. Requests
I1
Design Data, Test Model Data, and Program Rqmts.
REVIEW & ORGANIZE DATA
1
Task Assignments & Data
PERFORM SYNTHESIS & RESIZE
2
Evaluation Results
ASSESS INTRA-SYSTEM & INTER-SYSTEM COMPATIBILITY
3
Recommended Changes
Redefined Configuration & Integrated Test Plan
DOCUMENT SYNTHESIS & RATIONALE
4
Minor Reconfiguration Requests
System Definition
Recommended Changes
Add. Facility Rqmts.
Status Reports
O3
O4
O5
O2
O1
NODE:
DES/A223
TITLE:
SYNTHESIZE & REDEFINE CONFIGURATION
NUMBER:

Evaluation Results

Documentation covering assessment of the merit of each candidate configuration as well as the rationale behind each evaluation.

Redefined Configuration and Integrated Test Plan

The configuration is redefined by further analyzing requirements based on data derived during the formulation of concepts. This is accomplished by applying more advanced analytical methods to the design problem in order to achieve a higher degree of confidence in the selected design; the integrated test plan is comprised of the approach, scope, schedules, requirements, test objectives, and procedures associated with the total test program beginning with the initial development and testing and continuing through acceptance flight tests prior to delivery to the customer. The integrated test plan is developed following the completion of the design selection process.

A224 VERIFY RECOMMENDED DESIGN AND REQUIREMENTS

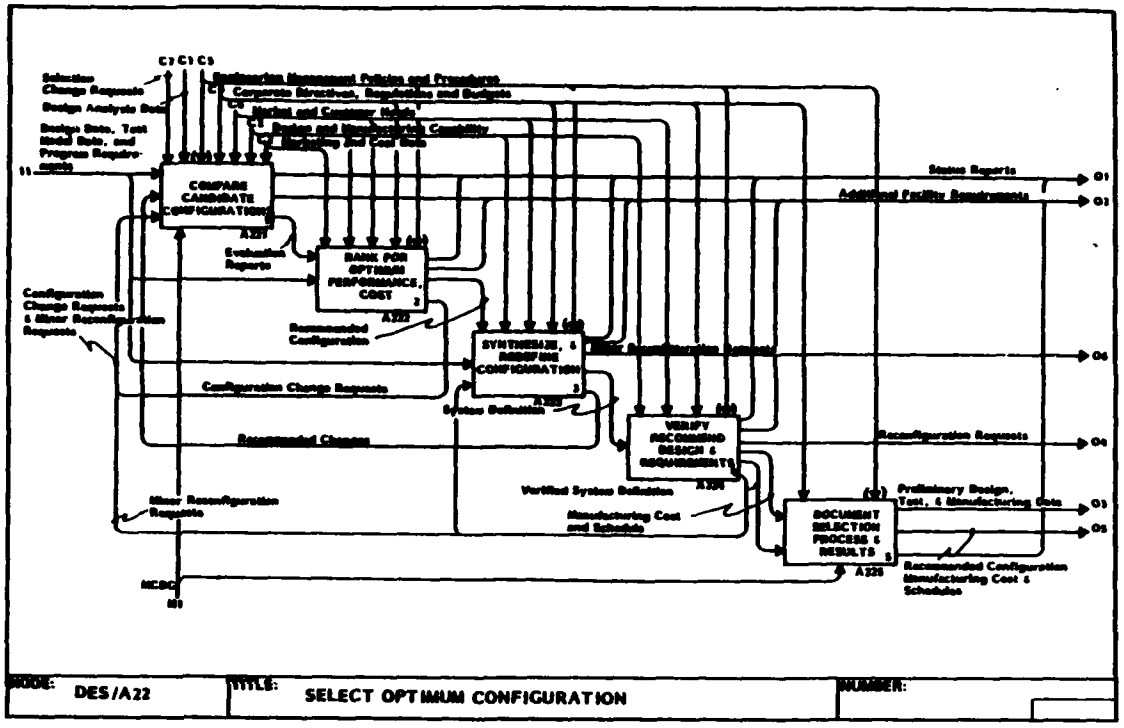

Box 1 – Uses the system definition requirements to update the integrated test plan. This involves the analyzing of revised drawings and data which depict changes in the configuration and performance characteristics of equipment/subsystems to determine the extent (type of verification and sequence) of impact on the test plan. Subsequent revisions to the plan are prepared as required.

Box 2 – Utilizes the updated test plan from box 1 as well as the system definition in the compiling of test results and completing the required tests. The activity consists of gathering and organizing the data obtained during the various phases of testing and analyzing the information in order to deterine the success/failure criteria before proceeding with the next step in the test sequence. Inconclusive or incomplete results are identified and reverified.

Box 3 – Applies the test results from box 2, the test plan from box 1, and the system definition to compile analysis results and complete the required analyses. This is comprised of the gathering, organizing, and reviewing the examination results from all phases of the test program to verify that sufficient quantitative and qualitative data are present, as well as to demonstrate that each design requirement is validated. As in the second activity, any inconclusive or incomplete results are identified and reverified.

Box 4 – Employs the analyses and model results from box 3, the test results from box 2, and the test plan from box 1 in evaluating the cost and performance schedule impact. This assesses the demonstration and validation program to determine its adequacy to verify performance requirements as well as checking to see that it's within cost and schedule limits and test facility capabilities. In addition, risk analysis is performed to appraise the adequacy of the verification results and the plan for proceeding with the program.

Box 5 – Uses the cost and schedule impact from box 4, the analyses and

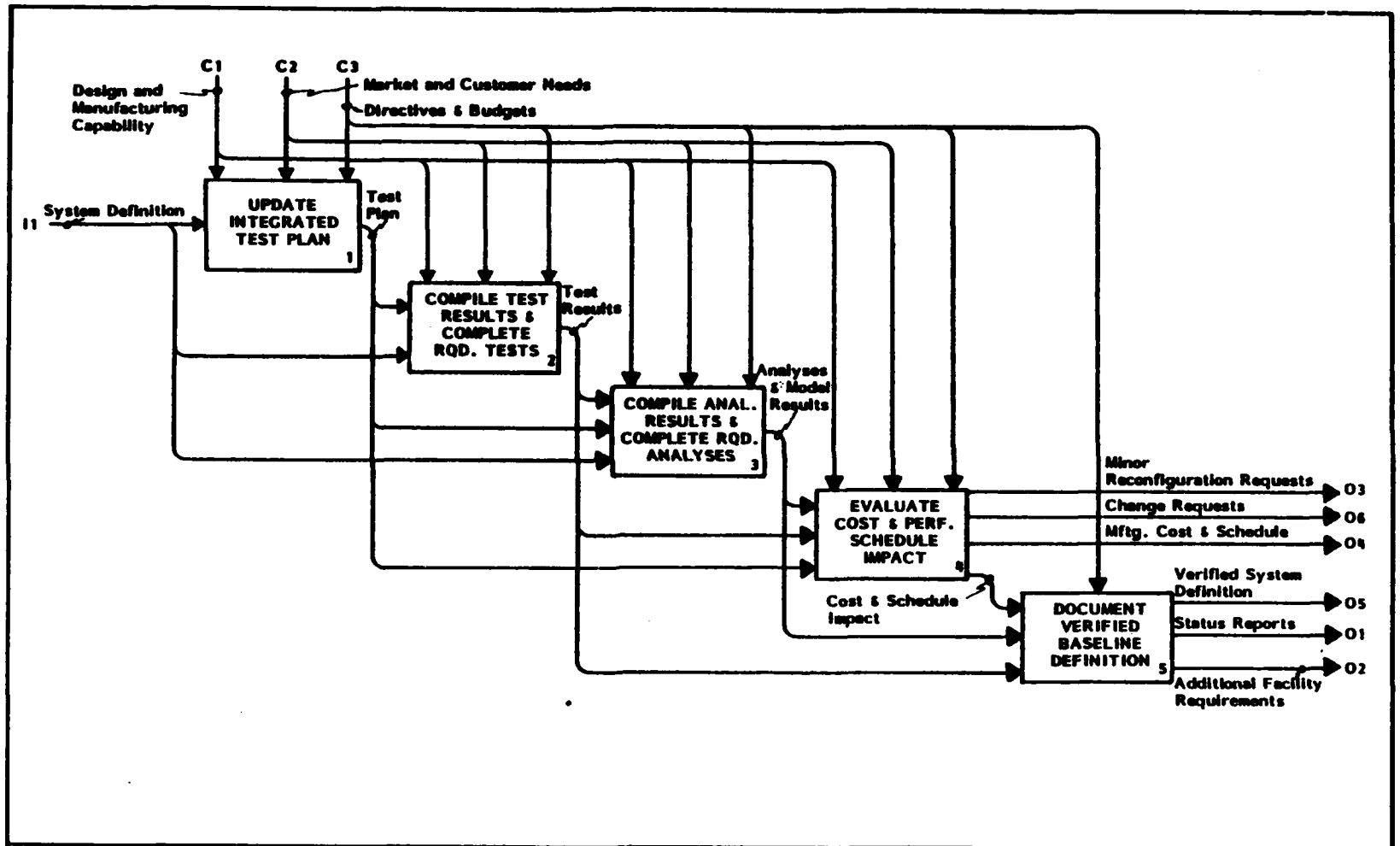

NODE:	TITLE:	NUMBER:
DES/A224	VERIFY RECOMMENDED DESIGN & REQUIREMENTS	

model results from box 3, and the test results from box 2 to provide the documented verified baseline definition subject to directives and budgets.

Glossary

Test Plan

A narrative description of the test program from the awarding to completion of the contract. It delineates the total test program, including test schedules and accept-reject criteria, which the contractor will conduct in the development and verification of the design and test requirements for the item being depicted. In addition, the type of verification is defined. Examples are inspection, demonstration, analysis, and tests.

Test Results

Consist of quantitative and qualitative data sufficient to show whether or not each test requirement was satisfied.

Analyses and Model Results

Analyses results consist of the end products from examination of tests. They are used to verify that the test requirements have been met; model results are comprised of analytical data from mathematical or simulation computer models.

Cost and Schedule Impact

Composed of cost and schedule status data resulting from a more verified design. The accumulation of the program data develops the cost and schedule assessments which are then reconciled with marketing and program budget information.

A225 DOCUMENT SELECTION PROCESS AND RESULTS

Box 1 – Uses the manufacturing cost and schedules and the verified system definition to assemble the ranking methods and results. This consists of collecting and organizing the data used for rating each configuration and the rationale used to accomplish the tasks. The information is arranged to anticipate subsequent program or system changes which may reverse decisions.

Box 2 – Utilizes the ranking methods and results from box 1 as well as other information to assemble the verification methods and results. In this activity, the data used for verifying design requirements and the rationale used to establish the validations methods are collected and organized.

Box 3 – Employs the verification methods and results from box 2, the ranking methods and results from box 1, and additional information as documentation in a form and format suitable for continued work.

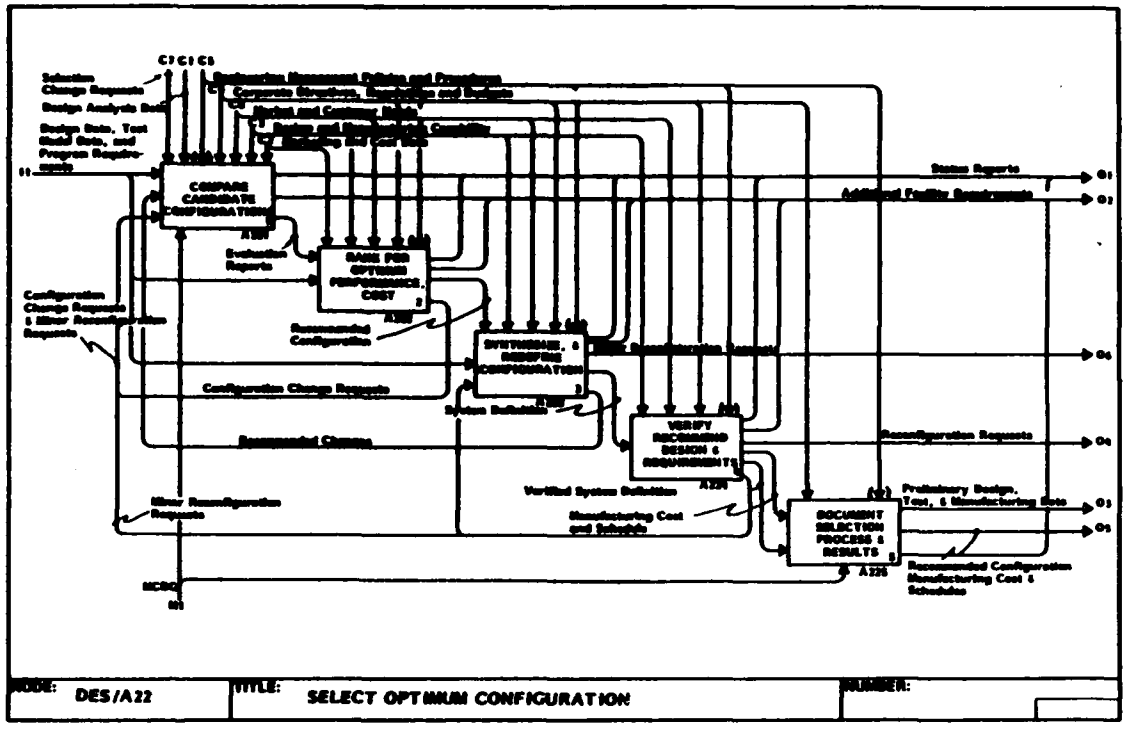

Glossary

Ranking Methods and Results

Data describing the rating of candidate configurations and the means as to how the ratings were accomplished.

Verification Methods and Results

Data describing the verification of design requirements and the means as to how the validation was accomplished.

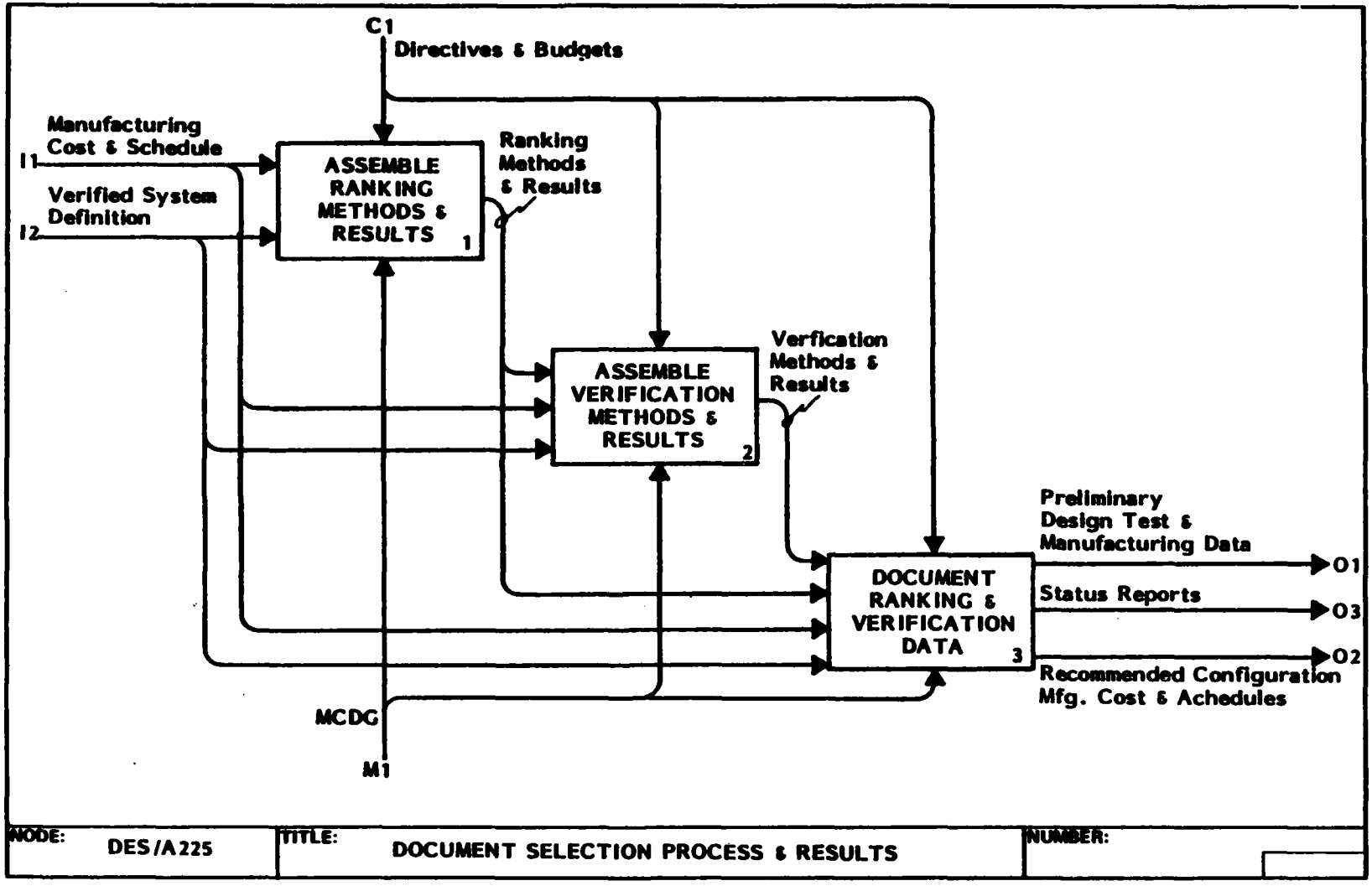
C1
Directives & Budgets
Manufacturing Cost & Schedule
I1
Verified System Definition
I2
ASSEMBLE RANKING METHODS & RESULTS
1
Ranking Methods & Results
ASSEMBLE VERIFICATION METHODS & RESULTS
2
Verfication Methods & Results
DOCUMENT RANKING & VERIFICATION DATA
3
Preliminary Design Test & Manufacturing Data
O1
Status Reports
O3
O2
Recommended Configuration Mfg. Cost & Achedules
MCDG
M1
NODE:
DES/A225
TITLE:
DOCUMENT SELECTION PROCESS & RESULTS
NUMBER:

A23 CONDUCT MANAGEMENT REVIEW AND APPROVAL

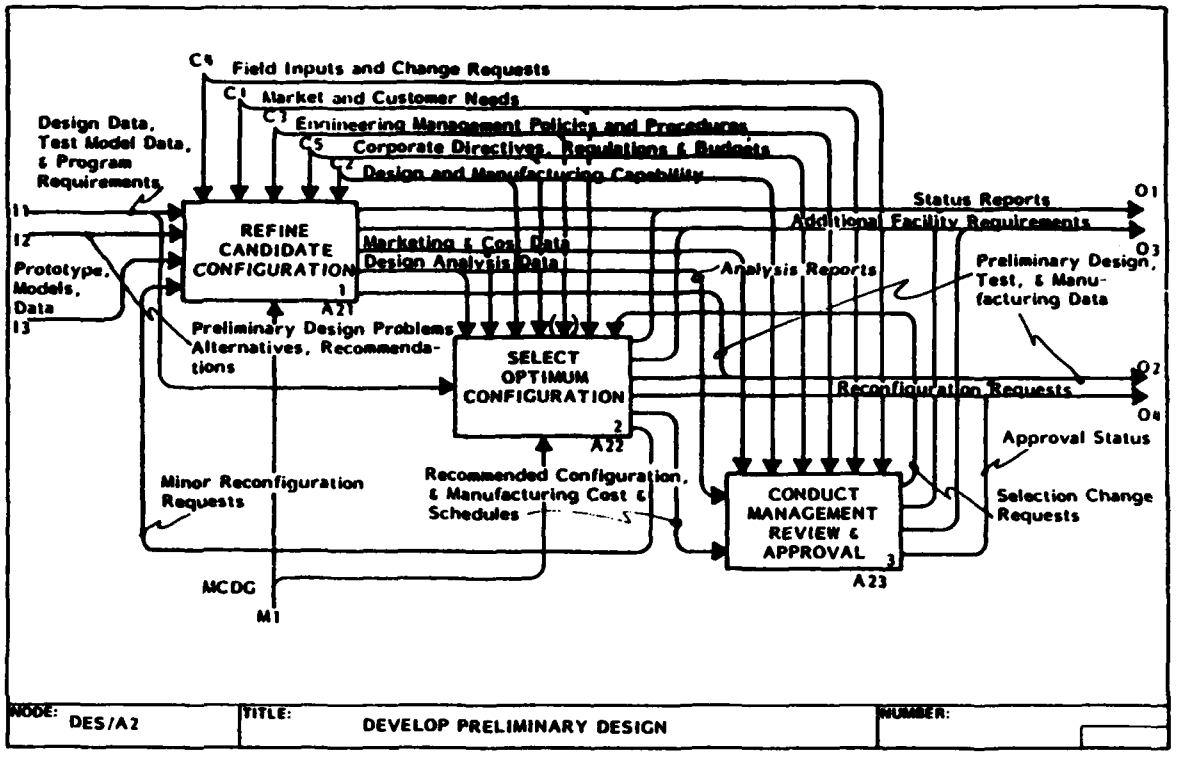

Box 1 – Uses analysis reports, the recommended configuration, and manufacturing costs and schedules to relate program management procedures and methods to the complexities of the candidate design. This includes adaptation of the decision control process and design reviews, data management and technical communication, work authorization process, cost and schedule control system, and the implementation of modified procedures.

Box 2 – Utilizes the same data as box 1 to evaluate the financial impact subject to recommended program controls from the first box. This activity assesses the influences of the selected configuration on the financial status. It considers the cost data base and allocations, alternate sources of funding, teaming arrangements, follow-on potential, market research, product variations, competitive capability expansion, capital improvements, return on investment, and documentation thereof.

Box 3 – Employs the financial impact report and other data to approve the configuration for detail design. This is accomplished by reviewing all aspects of engineering, management, finance, marketing, and manufacturing in relation to each other and the design configuration. In addition, the activity makes a commitment to begin the Detail Design phase and prototype design and testing.

Glossary

Recommended Program Controls

Recommended or tailored program control systems adapted to the particular development project.

Financial Impact Report

Document relating the selected configuration to the financial considerations.

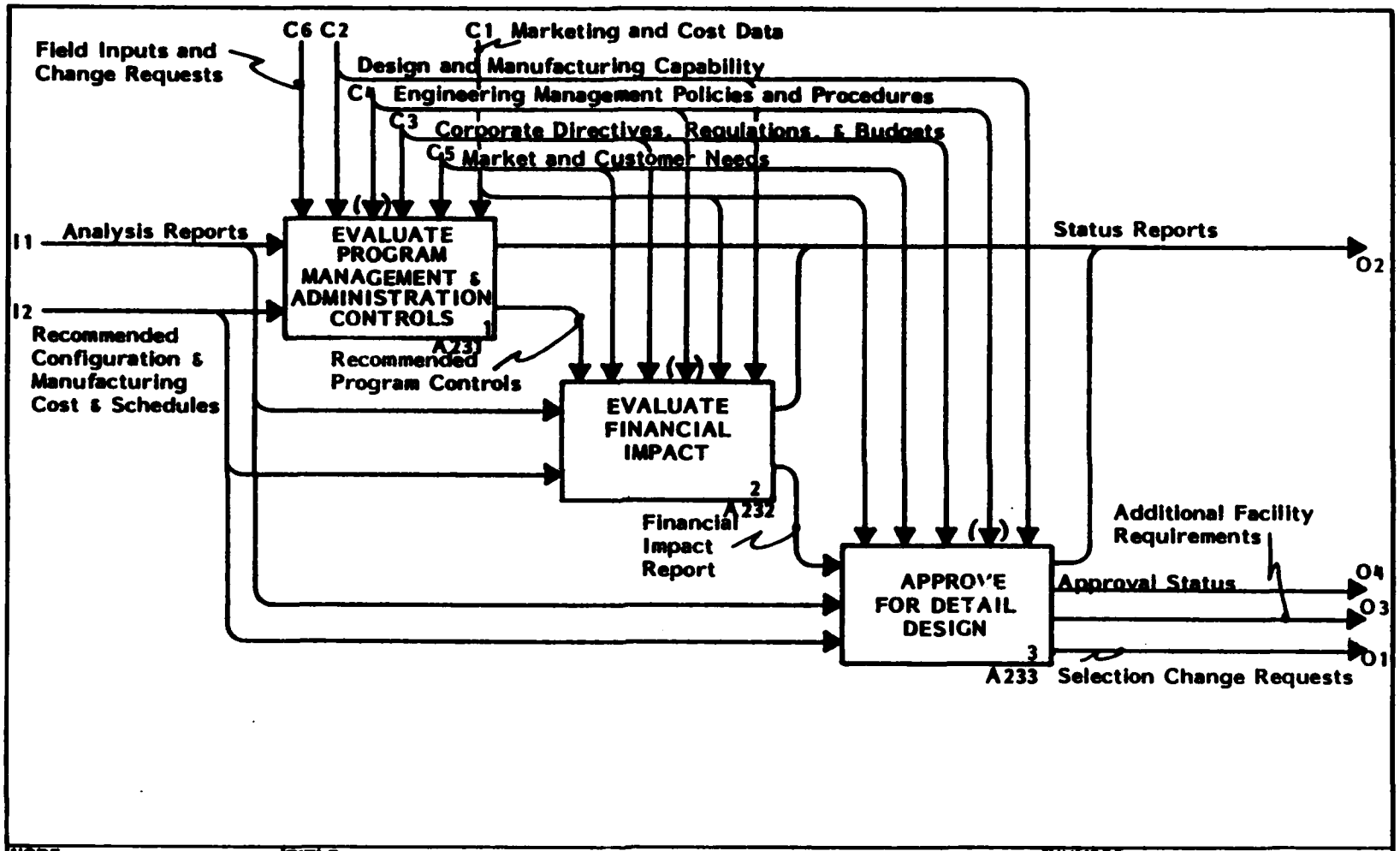

NODE:	TITLE:	NUMBER:
DES/A23	CONDUCT MANAGEMENT REVIEW & APPROVAL	

A231 EVALUATE PROGRAM MANAGEMENT AND ADMINISTRATION CONTROLS

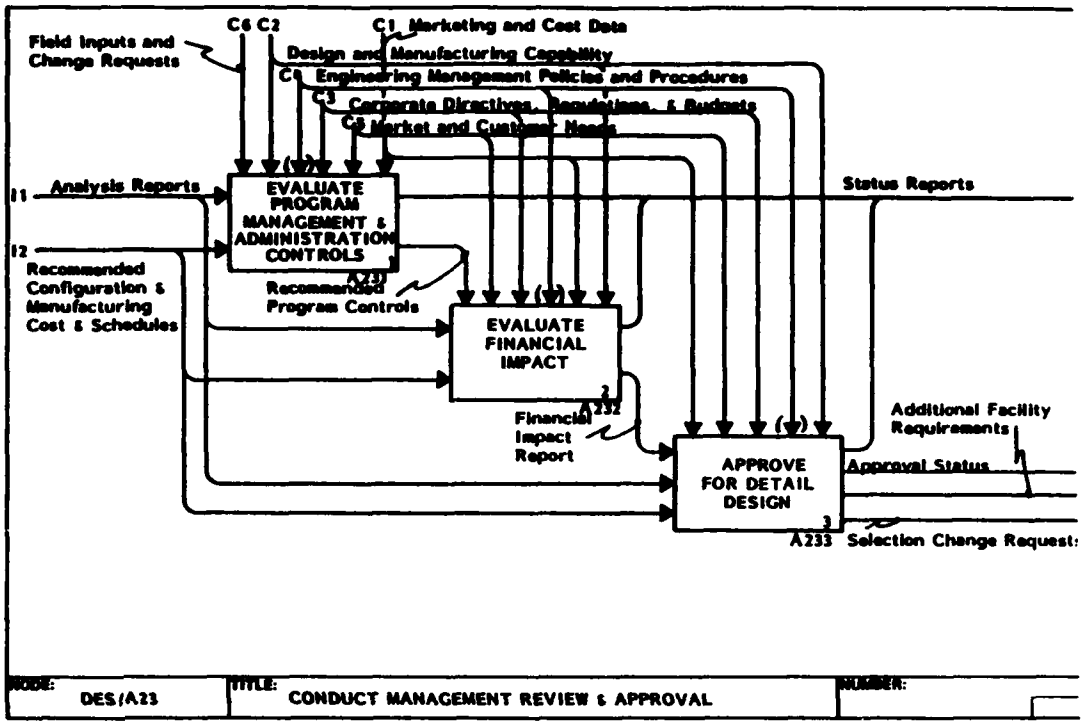

Box 1 – Uses analysis reports, the recommended configuration, and manufacturing cost and schedules to adapt the existing procedures which are utilized by the Management for making decisions and resolving issues and problems (including new requests from customers after the configuration is recommended). In addition, it reconciles the methods and criteria used by the Change Board, Configuration Review Board, and Design groups in preparing and conducting design reviews, design changes, and customer design requirements of a peculiar nature.

Box 2 – Utilizes the same information as box 1 to adapt data management and technical communications. This activity reconciles the methods by which data is administered, maintained, and made available and accessible to the Design Engineer, Design groups, Manufacturing groups, outside concerns (vendors), and Management.

Box 3 – Employs the aforementioned information in box 1 to reconcile the work authorization process, which is comprised of the methods and procedures used in the delegating of assignments. Moreover, resources are administered and controlled.

Box 4 – Applies the resources management from box 3 along with other information and adapts the mechanisms and tools used to perform such functions as cost control, schedule control, monitoring, and developing workforce reports.

Box 5 – Uses the tailored procedures and controls, the end product of the first 4 activities, as well as additional information, to develop and put into effect the modified procedures. These provide adequate tools for program management and administration.

Glossary

Resources Management

Determinations and instructions concerning the control of facilities, equipment, and tools; which will be needed to

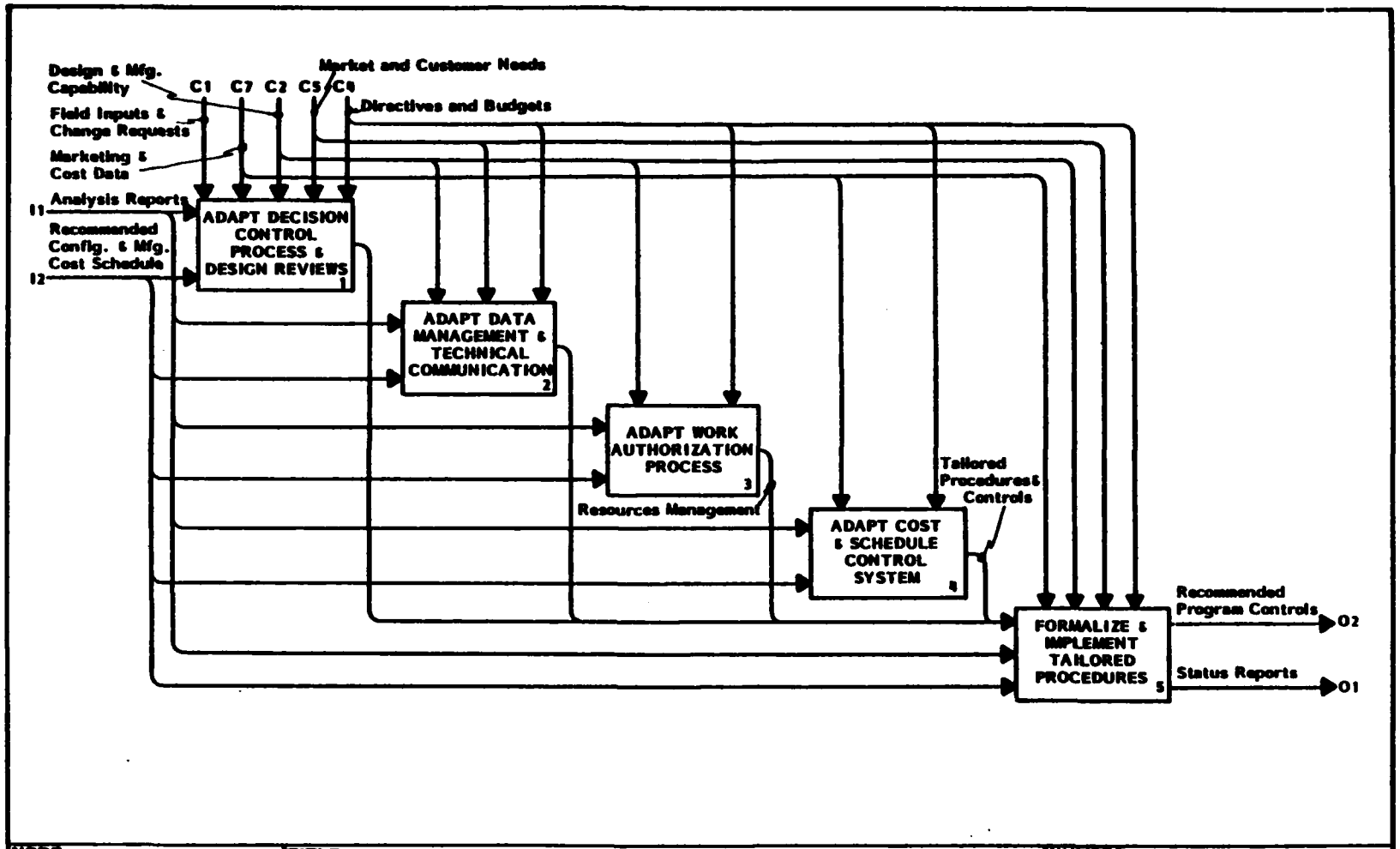

NODE:	TITLE:	NUMBER:
DES/A231	EVALUATE PROGRAM MANAGEMENT & ADMIN. CONTROLS	

do tasks in accordance with the respective work authorization process for a given program.

Tailored Procedures and Controls

Procedures and controls adapted to meet the needs of the respective program; whether the program is for a manufactured product, or a recommended configuration.

A232 EVALUATE FINANCIAL IMPACT

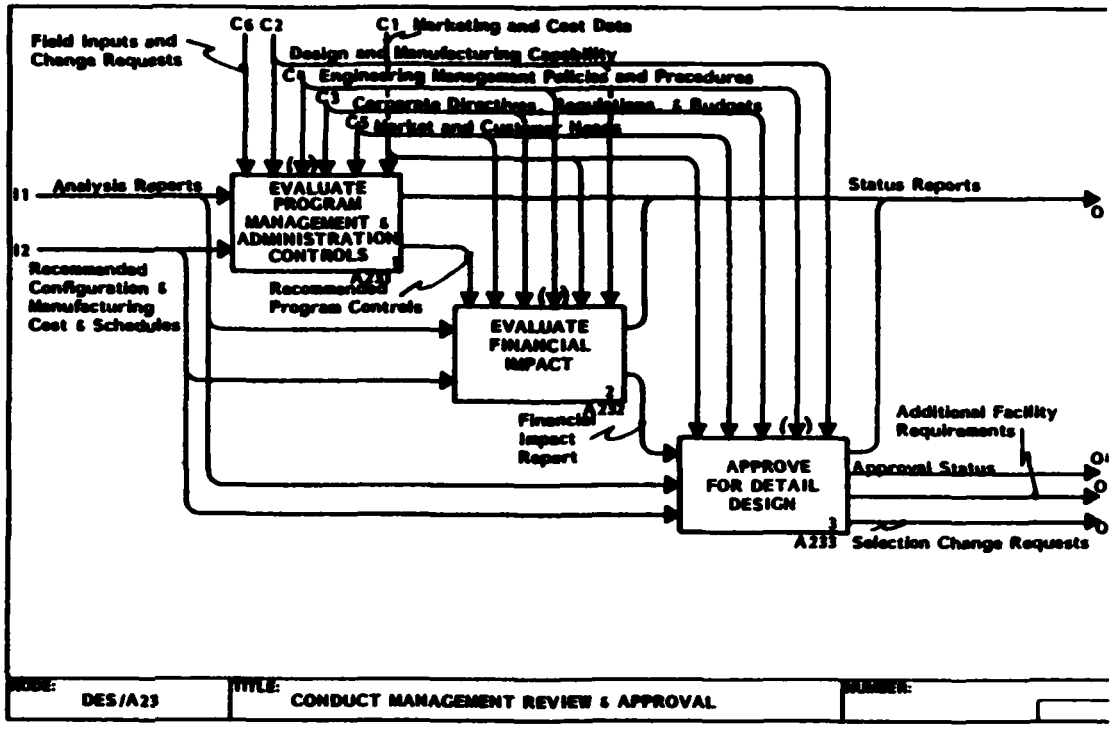

Box 1 – Uses analysis reports, the recommended configuration, and manufacturing cost and schedules in establishing the cost data base and allocations. This is accomplished by formulating a targeted cost area or baseline for the configuration based on the work breakdown structure and on parametric extrapolations.

Box 2 – Utilizes the results from box 1 along with additional information to determine alternate means of funding for the design as a substitution of, or addition to, the original funding source. Examples of these sources include government and commercial contracts, funding from own company, subcontracts, bank loans, and teaming arrangements with other corporations.

Box 3 – Applies the cost data and work breakdown structure allocations from box 1 and other information in estimating the follow-on potentials. This involves examining the possibilities of additions to, or variations on, the product, based on an analysis of future market trends, as well as from a financial standpoint.

Box 4 – Employs the candidate product variations from box 3 as well as other data in estimating the expended competitive capability. This consists of examining the present and future resource requirements needed in order to equitably compete for future design contracts. The resources include facilities, equipment, the availability and skills of the workforce, and tooling needs. Reliance is also made on short-, mid-, and long-range planning.

Box 5 – Uses the facilities and resources from box 4, the results from the first 3 activities, and data applied in box 1 to document the financial impact on the recommended configuration.

Glossary

Cost Data and Work Breakdown Structure Allocations

The cost data shows the estimated price of the configuration; the work break-

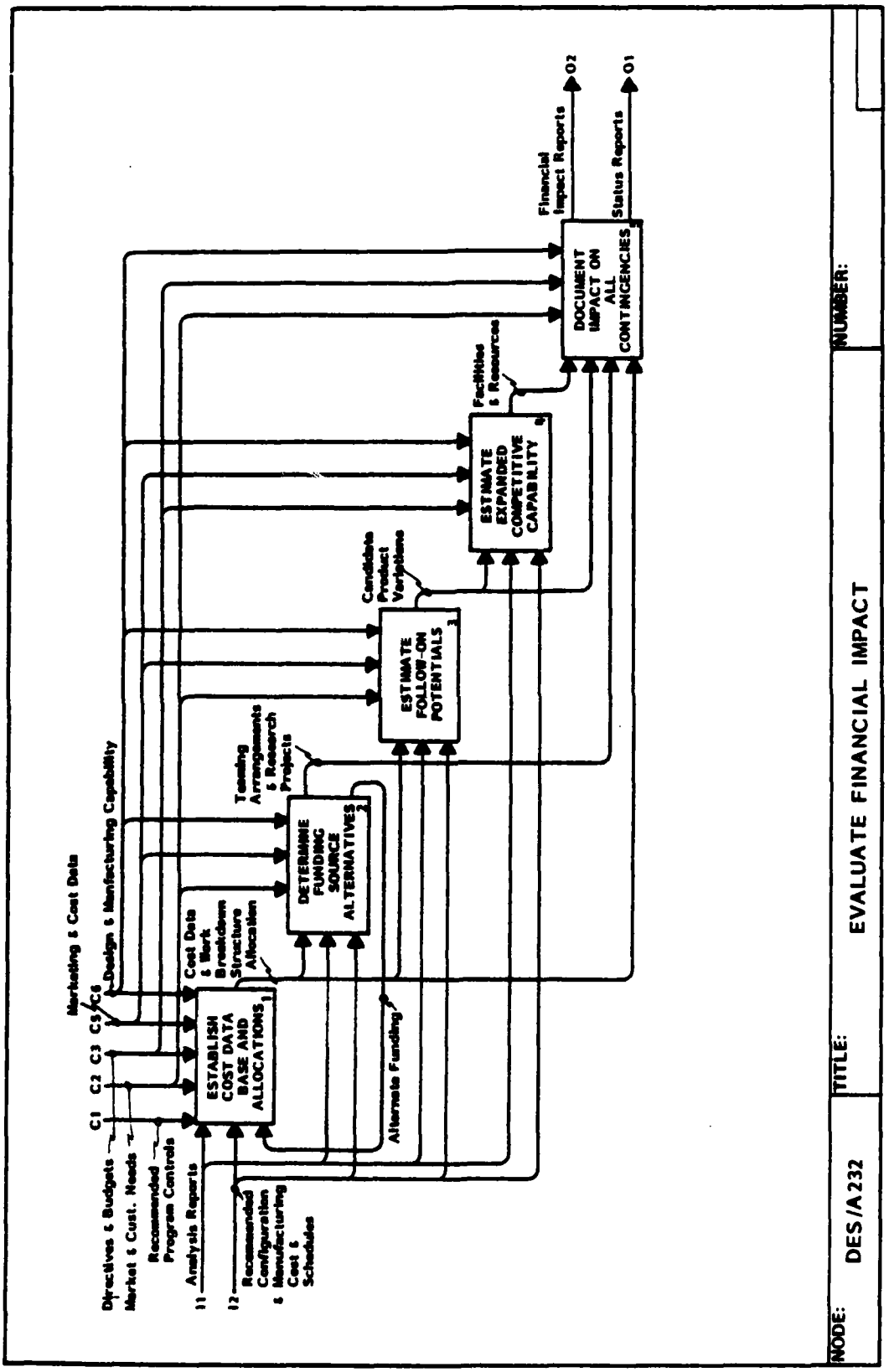
Directives & Budgets
Market & Cust. Needs
Recommended Program Controls
Analysis Reports
I1
I2
Recommended Configuration & Manufacturing Cost & Schedules
C1 C2 C3 C5 C6
Marketing & Cost Data
Design & Manufacturing Capability
ESTABLISH COST DATA BASE AND ALLOCATIONS 1
Cost Data & Work Breakdown Structure Allocation
DETERMINE FUNDING SOURCE ALTERNATIVES 2
Teaming Arrangements & Research Projects
Alternate Funding
ESTIMATE FOLLOW-ON POTENTIALS 3
Candidate Product Variations
ESTIMATE EXPANDED COMPETITIVE CAPABILITY 4
Facilities & Resources
DOCUMENT IMPACT ON ALL CONTINGENCIES 5
Financial Impact Reports
Status Reports
O2
O1
NODE:
DES/A 232
TITLE:
EVALUATE FINANCIAL IMPACT
NUMBER:

(A232 Glossary Continued)

down structure allocations illustrate the specific tasks required for the program and the amount of time and money that will be expended for each task.

Teaming Arrangements and Research Projects

Teaming arangements are used when the company chosen to produce the design does not have enough resources, time, etc., to perform the work requirements. The firm reviews its own specialty and strength (as compared to other candidate companies), financial status, and workforce availability. As a result, the company in question subcontracts various tasks to one or more outside concerns based on specialty, availability, and capability.

Alternate Funding

Substitute of, or addition to, the original funding source.

Candidate Product Variations

Illustrates the probable variations to the product.

Facilities and Resources

Determines the facilities, workforce, equipment, and tools needed to keep the company in a competitive position.

A233 APPROVE FOR DETAIL DESIGN

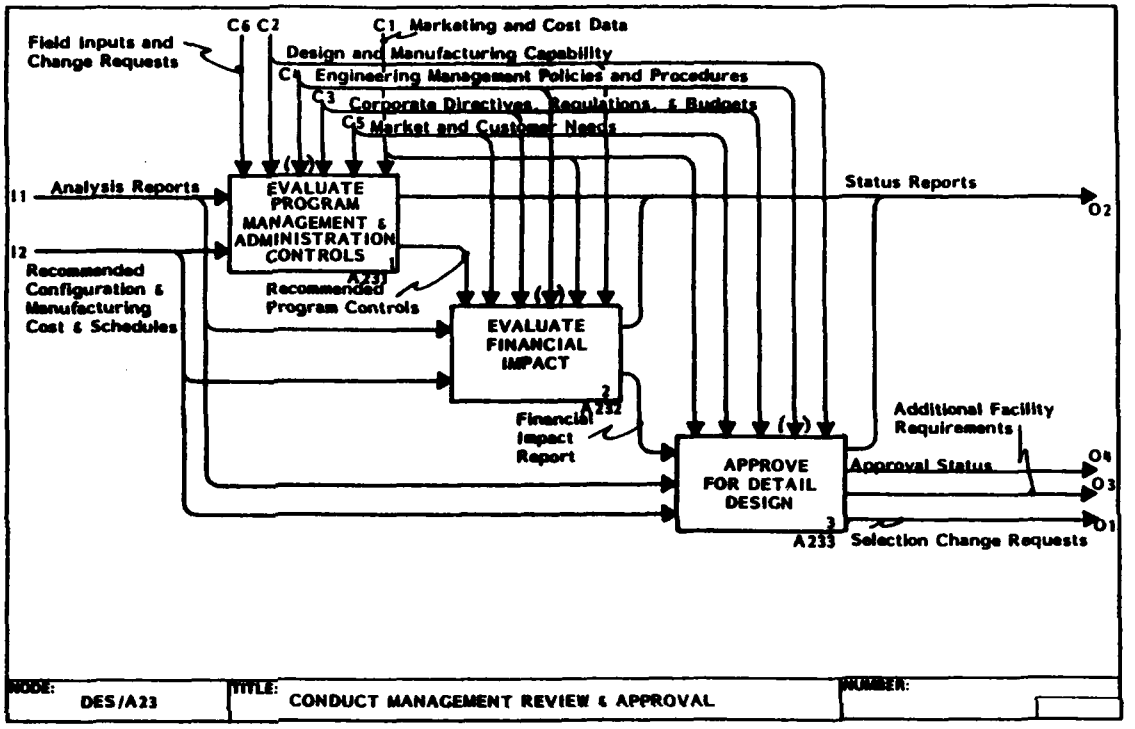

Box 1 – Uses financial impact reports, the recommended configuration, manufacturing cost and schedules, and analysis reports to validate that the system meets the defined mission criteria and requirements and is cost effective.

Box 2 – Utilizes the same information as box 1 to confirm the validity of the configuration criteria and requirements to support affirmative recommendations.

Box 3 – Employs the aforementioned data in box 1 to verify the validity of cost to systems and producibility considerations.

Box 4 – Applies the data specified in the first activity and validates that the probable risks to the program are acceptable. In addition, the function confirms the plan for minimizing the hazards' impact as well as the impact of unforeseen risks.

Box 5 – Uses the data employed by box 1 to confirm that the cost objectives and program management plan are realistic and that the design to be produced is affordable.

Box 6 – Reviews the mission needs, demonstration, validation, trade-offs, producibility, risk planning and alternates, cost objectives, and program management plan confirmations to obtain final approval of the recommended configuration. The configuration will then be transmitted to Detail Design.

Glossary

Mission Needs Confirmation

Validates the definition and cost effectiveness of the mission criteria and requirements.

Demonstration and Validation Confirmation

Confirms the validity of the configuration criteria and requirements. Examples include the validation of performance testing, components testing, mock-ups, and simulations.

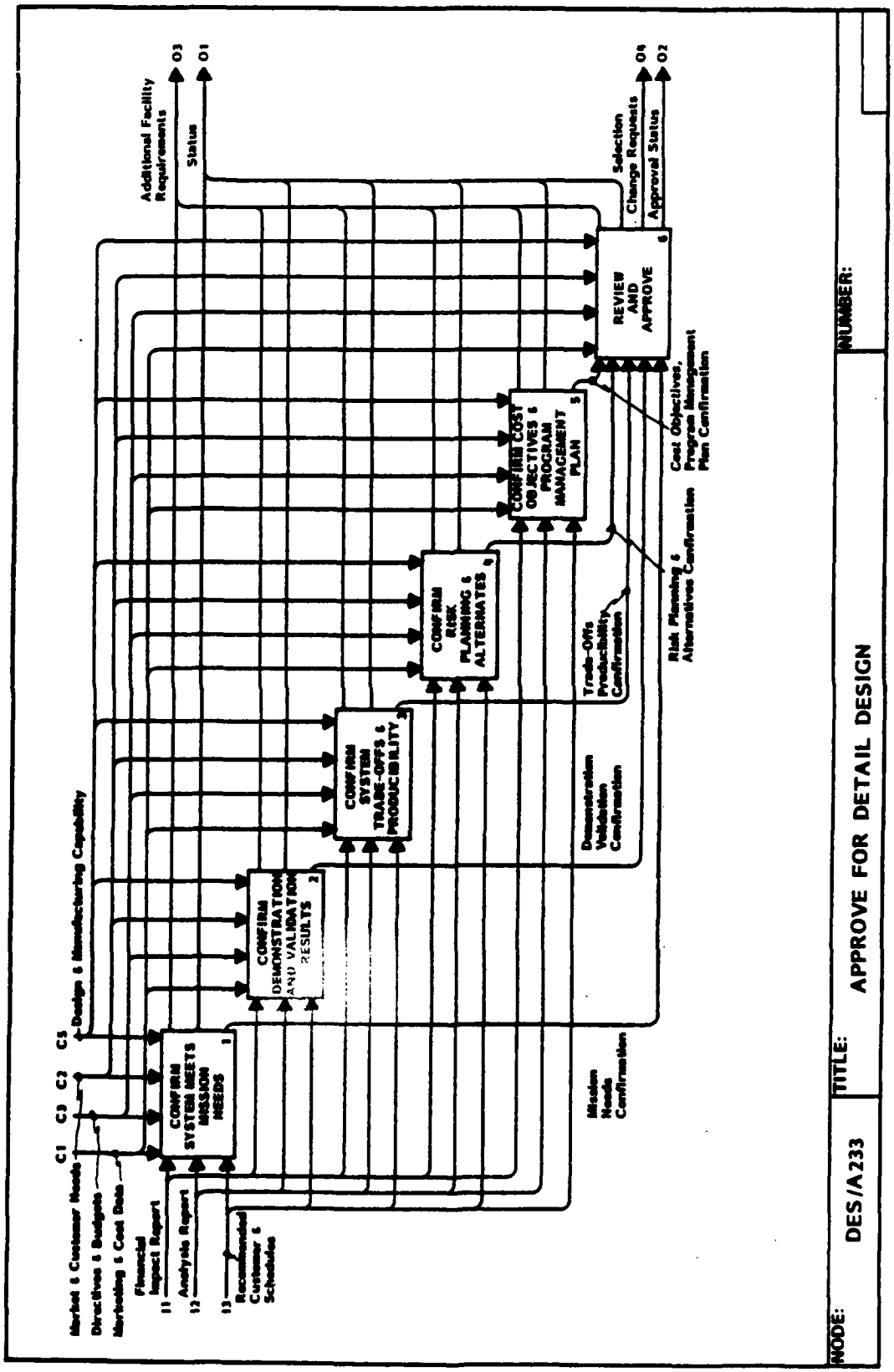
Additional Facility Requirements
O3
Status
O1
Selection
Change Requests
Approval Status
O4
O2
REVIEW AND APPROVE
6
CONFIRM COST OBJECTIVES & PROGRAM MANAGEMENT PLAN
5
CONFIRM RISK PLANNING & ALTERNATES
4
CONFIRM SYSTEM TRADE-OFFS & PRODUCIBILITY
3
CONFIRM DEMONSTRATION AND VALIDATION RESULTS
2
CONFIRM SYSTEM MEETS MISSION NEEDS
1
C1
C3
C2
C5
Design & Manufacturing Capability
Market & Customer Needs
Directives & Budgets
Marketing & Cost Data
Financial Impact Report
I1
Analysis Report
I2
Recommended Customer & Schedules
I3
Mission Needs Confirmation
Demonstration Validation Confirmation
Trade-Offs Producibility Confirmation
Risk Planning & Alternatives Confirmation
Cost Objectives, Program Management Plan Confirmation
NODE:
DES/A233
TITLE:
APPROVE FOR DETAIL DESIGN
NUMBER:

(A233 Glossary Continued)

Trade-offs and Producibility Confirmation

Verifies the validity of cost to systems as well as producibility considerations.

Risk Planning and Alternates Confirmation

Confirms the acceptability of probable risks and the plan for minimizing their impact as well as recognizes the possibility that unforeseen risks may occur.

Cost Objectives and Program Management Plan Confirmation

Validates that the design to be produced is affordable and that the cost objectives and program management are realistic.

A3 DEVELOP DETAIL DESIGN

The "Develop Detail Design" activity occurs when the Preliminary Designs have explored representative design areas to a depth where there are no significant problems, mysteries, or voids remaining; in other words, every detail part, assembly, and subassembly is designed in its entirety. When the risk of design changes is small, and the market prospects are high, Management decides on the "go ahead," and the product Detail Design commences.

Box 1 – The information from prototypes, models, preliminary design, testing and manufacturing is used to investigate, design, and document with layouts all of the task areas to the depth that there are no unknowns. The layouts are then complete enough for drafting personnel to use as a guide or pattern to produce either a detail drawing or detail data to completely describe the part to be fabricated.

Box 2 – Uses the recommended design layouts from Box 1 and other information to produce formal detail designs and data that will ultimately be used to direct Manufacturing in fabricating and inspecting the article and to show or prove to the customer what he is receiving. If there are problems, reviews and corrections are made to the detail design in Box 1.

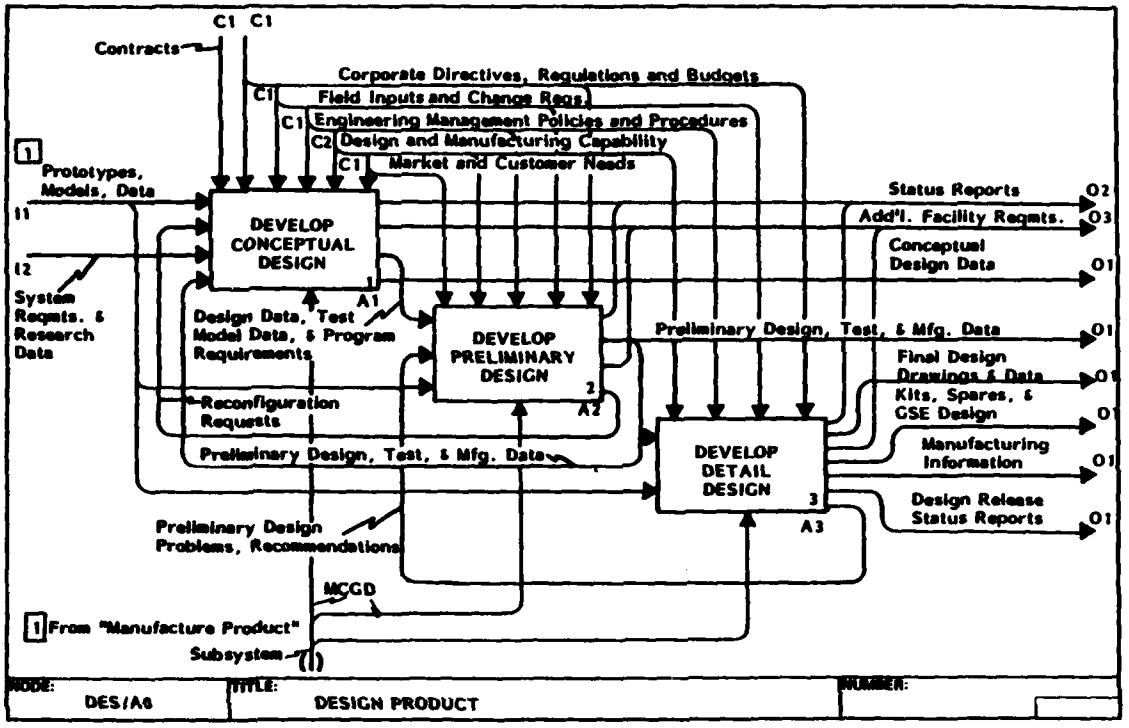

Box 3 – Utilizes the detail drawings and data from Box 2 in addition to other information for the purpose of obtaining design approval, releasing the layout and detail design information, and making periodic reports of the release status. Procedural problems are fed back to Box 2.

Glossary

Preliminary Design Problems, Alternatives

Problems and alternatives that were uncovered, or suggested, during review from a detail design standpoint and must be reprocessed through Preliminary Design tasks.

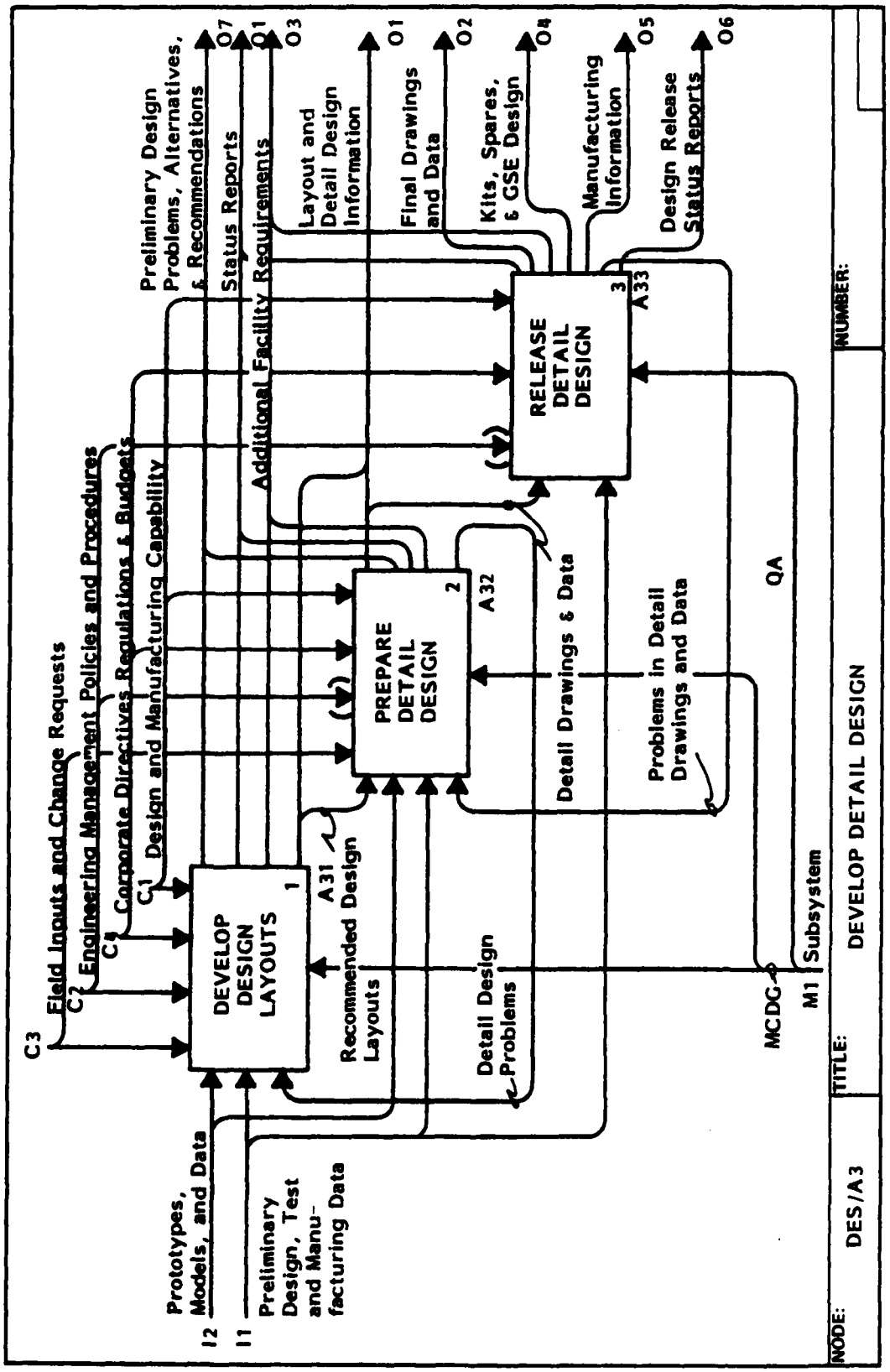
Field Inputs and Change Requests
C2
C3
Engineering Management Policies and Procedures
C4
Corporate Directives Regulations & Budgets
C1
Design and Manufacturing Capability
DEVELOP DESIGN LAYOUTS
1
A31
Recommended Design Layouts
PREPARE DETAIL DESIGN
2
A32
RELEASE DETAIL DESIGN
3
A33
Preliminary Design Problems, Alternatives, & Recommendations
O7
Status Reports
O1
Additional Facility Requirements
O3
Layout and Detail Design Information
O1
Final Drawings and Data
O2
Kits, Spares, & GSE Design
O4
Manufacturing Information
O5
Design Release Status Reports
O6
Detail Drawings & Data
Problems in Detail Drawings and Data
Detail Design Problems
QA
MCDG
M1
Subsystem
Prototypes, Models, and Data
I2
Preliminary Design, Test and Manufacturing Data
I1
NODE:
DES/A3
TITLE:
DEVELOP DETAIL DESIGN
NUMBER:

(A3 Glossary Continued)

Recommended Design Layouts/Detail Design Problems and Evaluations

(recommended design layouts) Abbreviated drawings and data in sufficient detail and accuracy to guide engineers and drafting personnel in the preparation of formal detail drawings and information. Layouts may either be in detail representing one of a family of parts with directions for applying variables for other family members, or if unique, need only design completion to become a detail drawing or part description. (detail design problems) Problems which arise during the preparation of detail drawings and data that are of a nature that minor layout changes can solve; they are of variation to a concept rather than a concept change. (evaluations) Consist of the reviews of the respective problems and the possible impact of the suggested layout revisions.

Detail Drawings and Data/Problems

Describe in detail the part to be fabricated so that any part made by one manufacturer will be identical (within specified tolerances) to that produced by another manufacturer. (problems) Comprised from the released detail design and data and are of a procedural nature. They include inconsistencies with advance material orders, production memos, and the drawing package.

Layout and Detail Design Information

Consists of layouts and advance information which are used to inform Manufacturing of the scope of detail designs to come.

A31 DEVELOP DESIGN LAYOUTS

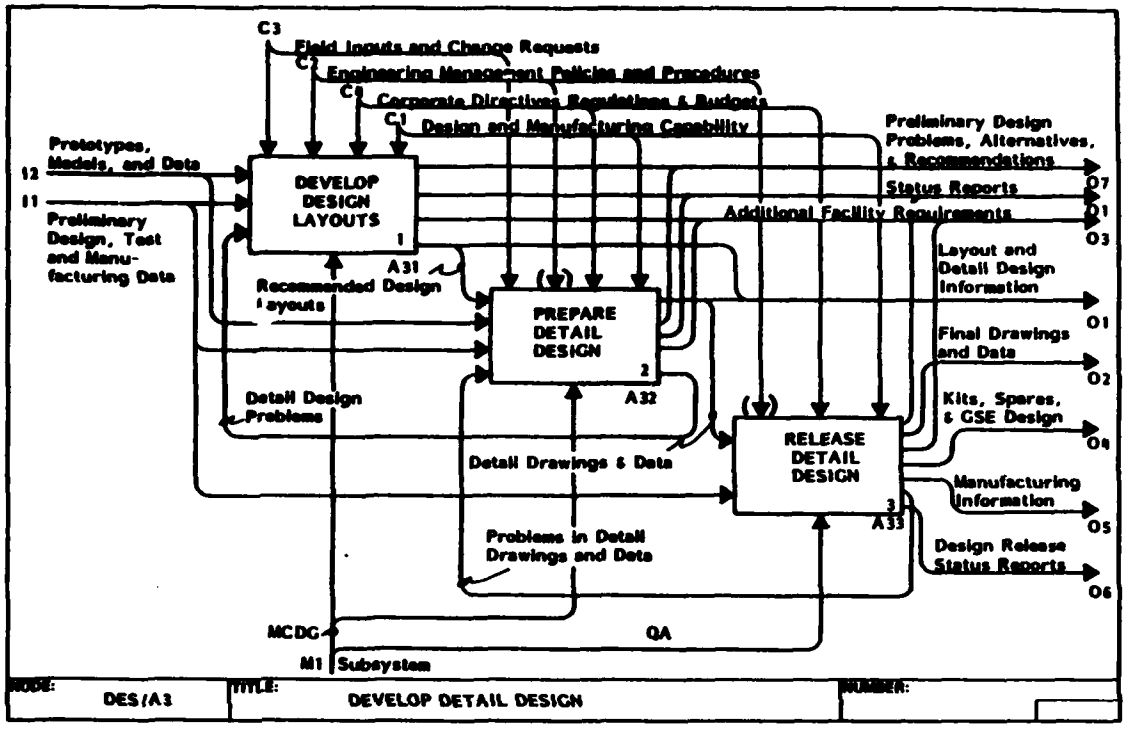

Box 1 - Applies the Detail Design problems and evaluations in accordance with other information to review the Preliminary Design layouts. This is done to construe the approved design and to plan for subsequent tasks, especially those requiring special emphasis or involving higher risks.

Box 2 – Utilizes the accepted designs from box 1, specific problems, and other data to analyze and refine the Preliminary Design layouts. The activity determines if the product configuration is geometrically correct, structurally sound, and producible within cost and schedule limits, manufacturing capabilities, and material availability. Any necessary alterations or problems which are uncovered through this refinement are fed back to box 1 for further review.

Box 3 – Applies the refined layouts from box 2 and data consisting of the subsystem equipment interface definition and the structures definition to expand the detail of the Preliminary Design layouts and information that explain and delimit the interfaces of the subsystems. Any changes to update the baseline or other problems from the interface investigations are fed back to box 2 for resolution.

Box 4 – Employs the output from box 2 and the revised layouts with interfaces from box 3 in order to analyze and refine for technological impact. The activity is characterized by analytic investigations by all of the technology sciences. The performance is reevaluated in respect to the recommended changes. If a significant loss of performance is disclosed, the activities in boxes 2 and 3 will have to be redone.

Box 5 - The refined technological demands data from box 4 as well as the refined and revised layouts with interfaces from boxes 2 and 3 are used in the preparation of the design layouts. The activity is primarily one of documentation which results in a recommended package of design layouts and analytic substantiation of design solutions. Any requests for alterations to the layouts are fed back to the second and/or third activity respectively.

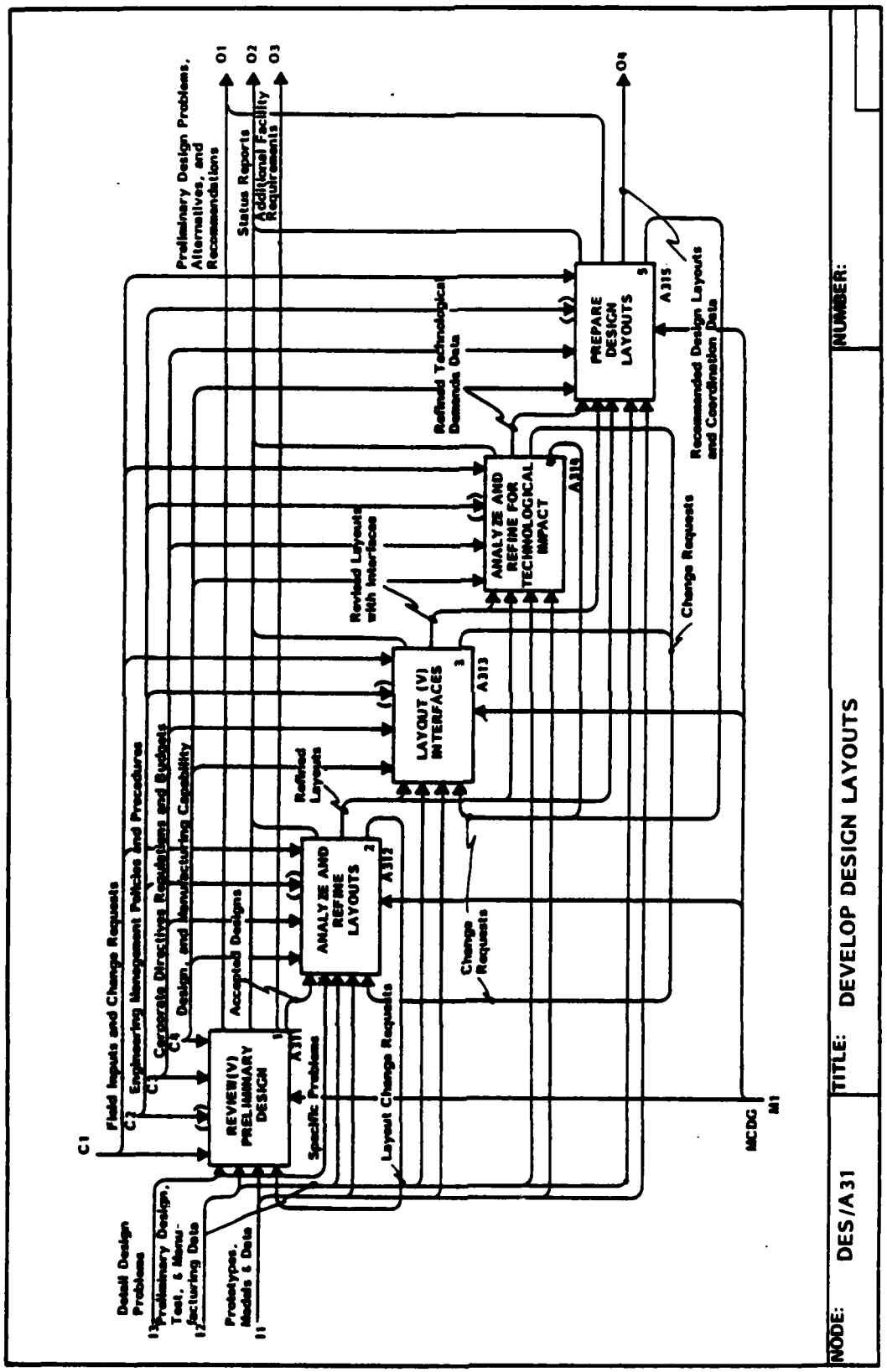
C1
Field Inputs and Change Requests
C2
Engineering Management Policies and Procedures
C3
Corporate Directives Regulations and Budgets
C4
Design, and Manufacturing Capability
REVIEW(V) PRELIMINARY DESIGN
1
A311
Accepted Designs
Specific Problems
ANALYZE AND REFINE LAYOUTS
2
A312
Refined Layouts
Layout Change Requests
LAYOUT (V) INTERFACES
3
A313
Revised Layouts with Interfaces
ANALYZE AND REFINE FOR TECHNOLOGICAL IMPACT
4
A314
Refined Technological Demands Data
PREPARE DESIGN LAYOUTS
5
A315
Recommended Design Layouts and Coordination Data
Change Requests
Change Requests
MCDG
M1
Detail Design Problems
I3
Preliminary Design, Test, & Manufacturing Data
I2
Prototypes, Models & Data
I1
Preliminary Design Problems, Alternatives, and Recommendations
O1
Status Reports
O2
Additional Facility Requirements
O3
O4
NODE: DES/A31
TITLE: DEVELOP DESIGN LAYOUTS
NUMBER:

(A31 Continued)

Glossary

Accepted Designs

These make up a data package which has been reviewed from a Detail Design standpoint and found complete enough to commit to much further refinement.

Specific Problems

Problems which require unusual emphasis in particular areas.

Refined Layouts

Revised to incorporate the changes resulting from the initial Detail Design review. The layouts form the baseline for subsequent investigations.

Revised Layouts with Interfaces

Define the integration of all the subsystems with each other and the structure. The layouts show locations, structural support, wire, tube, and duct routings.

Refined Technological Demands Data

The technical performance analysis data package which revises the basic assemblage in respect to the changes made in the detail layouts. This information provides traceability for the design decisions which were made in this phase and shows the trend toward meeting design and performance requirements.

A311 REVIEW PRELIMINARY DESIGN

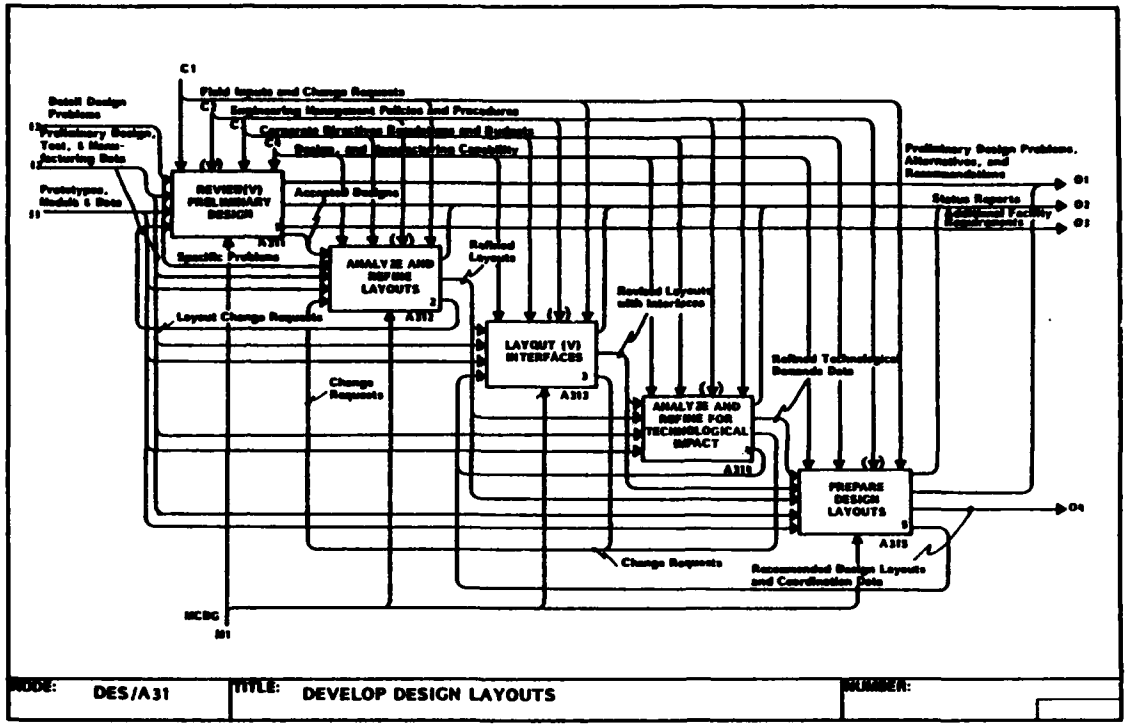

Box 1 – Detail Design problems and evaluations, change requests, and Preliminary Design, test, and Manufacturing data are used to identify the Preliminary Design problem areas. This is accomplished by reviewing the information packages from a Detail Design standpoint to determine inadequacies and areas requiring special emphasis. In addition, plans are developed to achieve the desired objectives and to utilize the available capabilities in the schedule alloted for the tasks.

Box 2 – Utilizes the problem area definition from box 1 to identify the information required. This activity further refines the detail plans to make known specific information requirements as well as the means to acquire them within cost restraints.

Box 3 – Employs the information requirements from box 2 along with data from Preliminary Design, tests, Manufacturing, prototypes, and models to gather and create information. This involves assembling the needed data by various sources and means, and may include subcontractor or vendor participation, industry surveys, past performance, technology transfers, or internal development. In short, the activity adds to the Preliminary Design data package supplemental and necessary information essential to evaluate the quality of the design for further detail breakdown.

Box 4 – Applies the candidate designs and data from box 3 to evaluate design alternatives. This provides for the assessment of all review information against Detail Design policies, procedures, capabilities, and regulations. It also stipulates assurance that the data is accurate, complete, and ready for further refinement. Any rejected designs and information are returned to box 3, where they are recreated.

Glossary

Problem Area Definition

A breakdown of the tasks identified by the review of the Preliminary Design

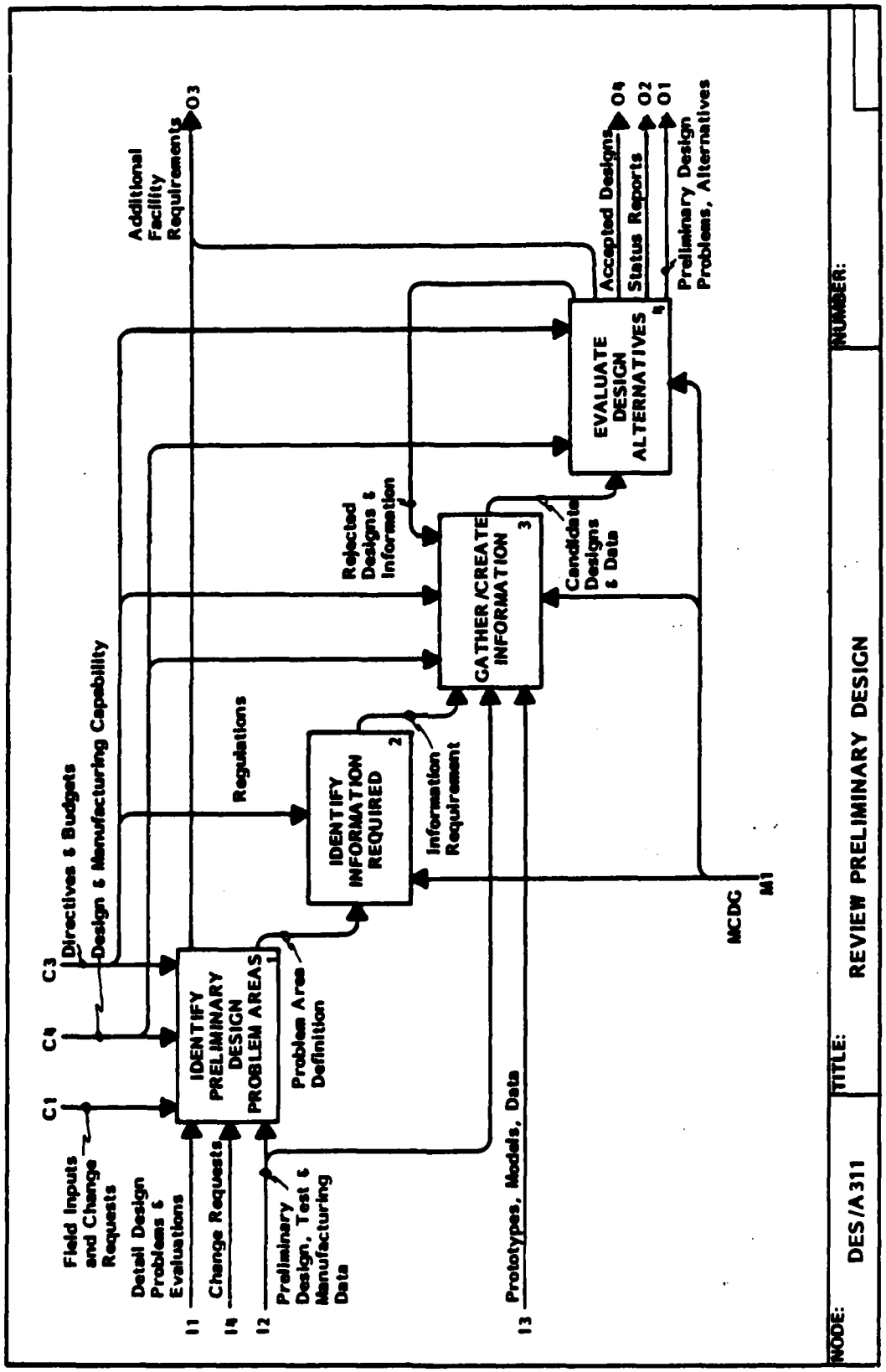
C1
C2
C3
Directives & Budgets
Design & Manufacturing Capability
Field Inputs and Change Requests
Detail Design Problems & Evaluations
I1
Change Requests
I4
Preliminary Design, Test & Manufacturing Data
I2
IDENTIFY PRELIMINARY DESIGN PROBLEM AREAS
1
Problem Area Definition
Regulations
IDENTIFY INFORMATION REQUIRED
2
Information Requirement
Prototypes, Models, Data
I3
GATHER/CREATE INFORMATION
3
Rejected Designs & Information
Candidate Designs & Data
EVALUATE DESIGN ALTERNATIVES
4
Additional Facility Requirements
O3
Accepted Designs
O4
Status Reports
O2
Preliminary Design Problems, Alternatives
O1
MCDC
M1
NODE:
DES/A311
TITLE:
REVIEW PRELIMINARY DESIGN
NUMBER:

(A311 Glossary Continued)

data, including the skills necessary to solve the problems.

Information Requirement

Consists of an identification of recognized data deficiencies in the Preliminary Design data package.

Candidate Designs and Data/Rejected Designs and Information

The candidate designs and data consist of the complete definition of possible designs under consideration and the information to support subsequent evaluations; the rejected designs and information are deemed unacceptable as a result of incomplete and/or inaccurate data.

A312 ANALYZE AND REFINE PRELIMINARY DESIGN LAYOUTS

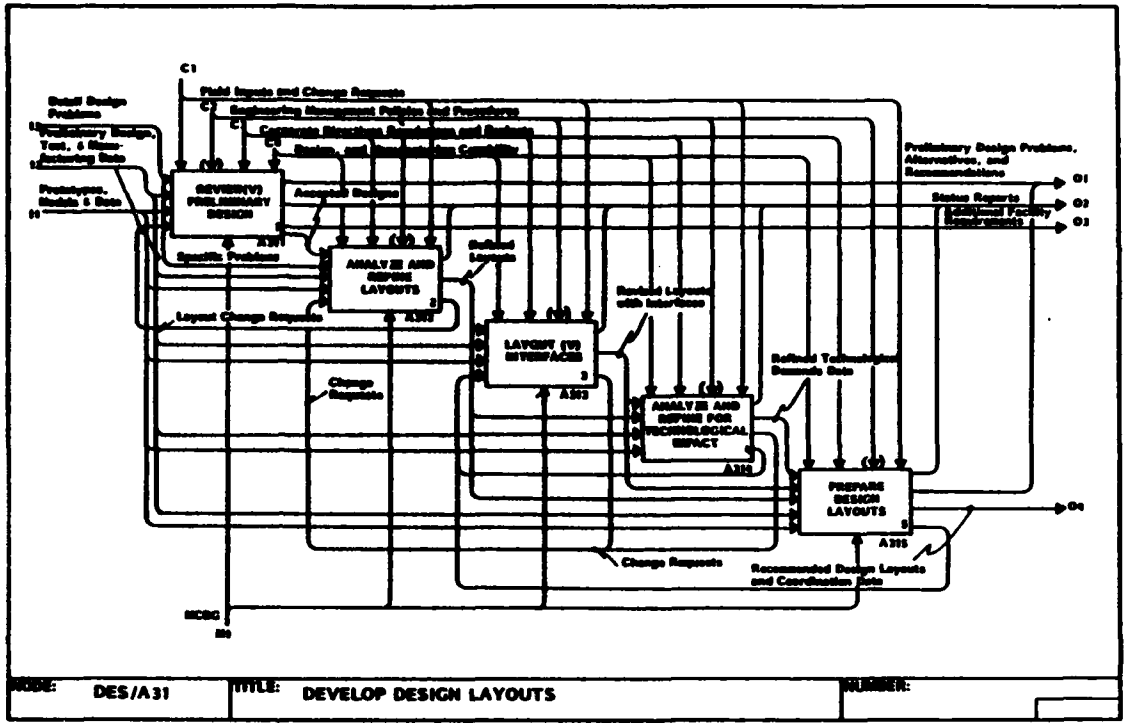

Box 1 – Coordinate information from Preliminary Design, tests, Manufacturing, prototypes, and models with the accepted designs. Also included are change requests and specific problems. This new data package is then analyzed from a Detail Design viewpoint to determine its suitability to accomplish refinement of the layouts. There may be requests for additional data.

Box 2 – Utilizes the analyzed and coordinated data from box 1 along with other information to design layouts and their alternates.

Box 3 – Evaluates the revised layouts from box 2 along with information from prototypes and models. This is done subject to governing policies and procedures. Particular emphasis is placed on the design's producibility within cost limits. Any requests for alterations are sent back to box 2.

Glossary

Analyzed and Coordinated Data

Data package reorganized and synchronized with applicable Engineering groups. The information is then examined to determine its suitability for further refinement.

Revised Layouts

Reflect the results of the analysis and design.

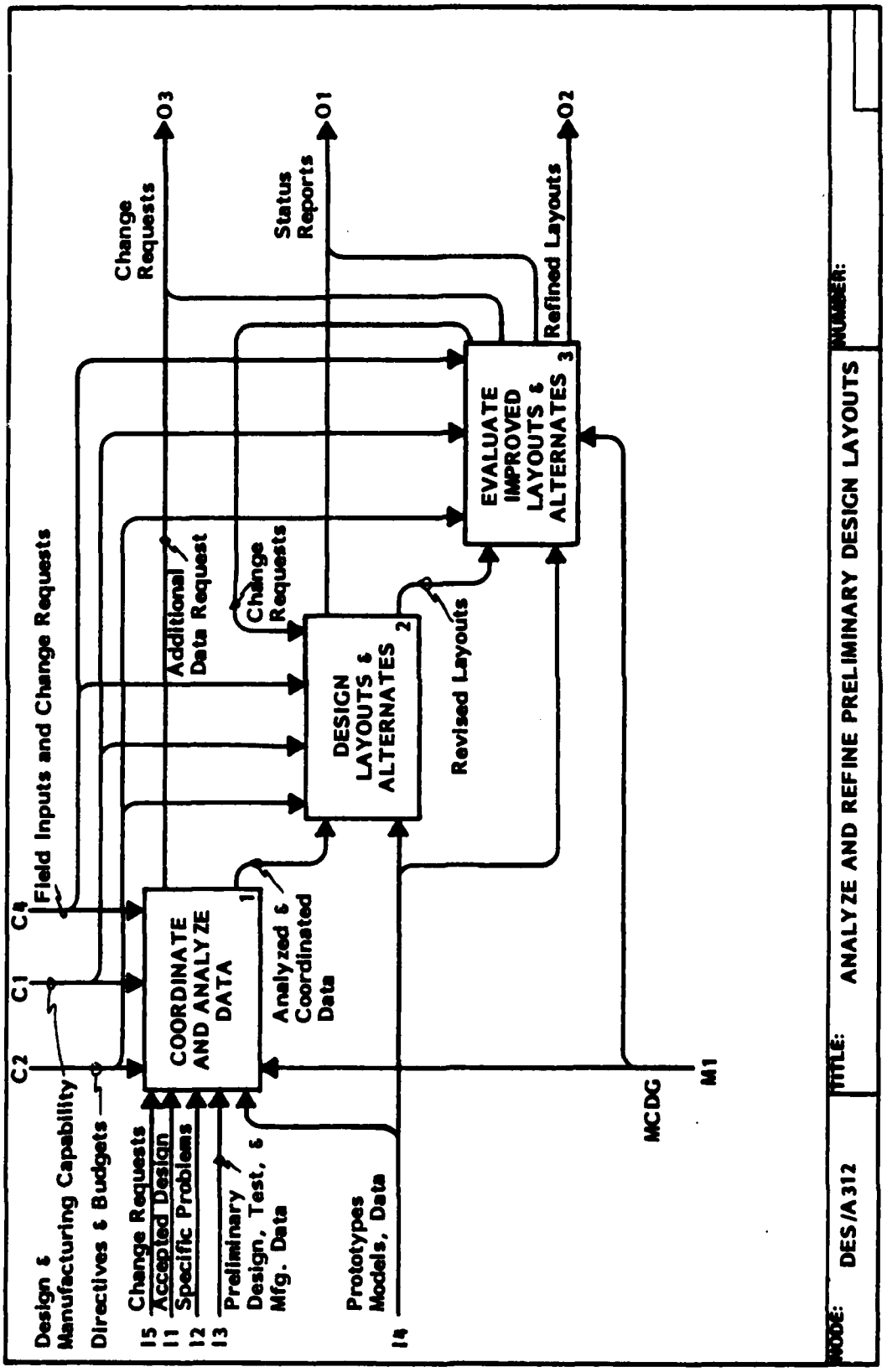
Design & Manufacturing Capability
Directives & Budgets
C2
C1
C4
Field Inputs and Change Requests
I5 Change Requests
I1 Accepted Design
I2 Specific Problems
I3 Preliminary Design, Test, & Mfg. Data
I4 Prototypes Models, Data
COORDINATE AND ANALYZE DATA
1
Analyzed & Coordinated Data
Additional Data Request
Change Requests
DESIGN LAYOUTS & ALTERNATES
2
Revised Layouts
EVALUATE IMPROVED LAYOUTS & ALTERNATES
3
Refined Layouts
Change Requests
O3
Status Reports
O1
O2
MCDG
M1
NODE: DES/A312
TITLE: ANALYZE AND REFINE PRELIMINARY DESIGN LAYOUTS
NUMBER:

A313 LAY OUT INTERFACES

Box 1 – Assembles and analyzes information from Preliminary Design, tests, and Manufacturing, as well as refined layouts and change requests, for accuracy and completeness. However, there may be requests for additional data.

Box 2 – Uses the analyzed data from box 1 to determine interfaces types and locations. In this activity, interfaces are identified for their particular investigations and plans are developed for their resolution. Requests for additional information are fed back to the first activity.

Box 3 – Utilizes the sketches and data from box 2 to develop the interface layouts. These define the results of interface investigations. There is a feedback to box 1 if more complete information is needed and to box 2 if there are any requests for alterations.

Box 4 – Employs the layouts with interface data from box 3 as well as information from prototypes and models to evaluate and refine the interface layouts in order to determine if the most effective solutions in respect to cost and performance were achieved. Recommendations made to correct such deficiencies are sent back to boxes 2 and 3.

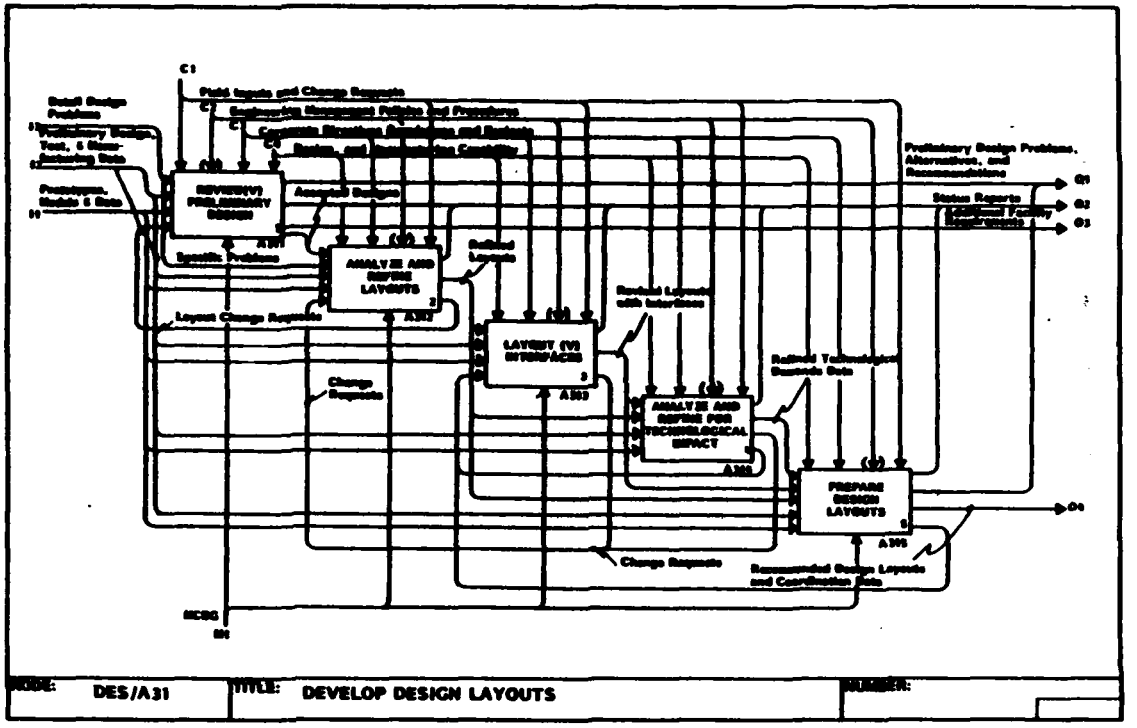

Glossary

Analyzed Data

Screened and examined data which will be used to determine interfaces.

Sketches and Data

Directions and plans to accomplish the layouts.

Layouts with Interface Data

Design layouts with substantiating or explanatory information depicting interface solutions.

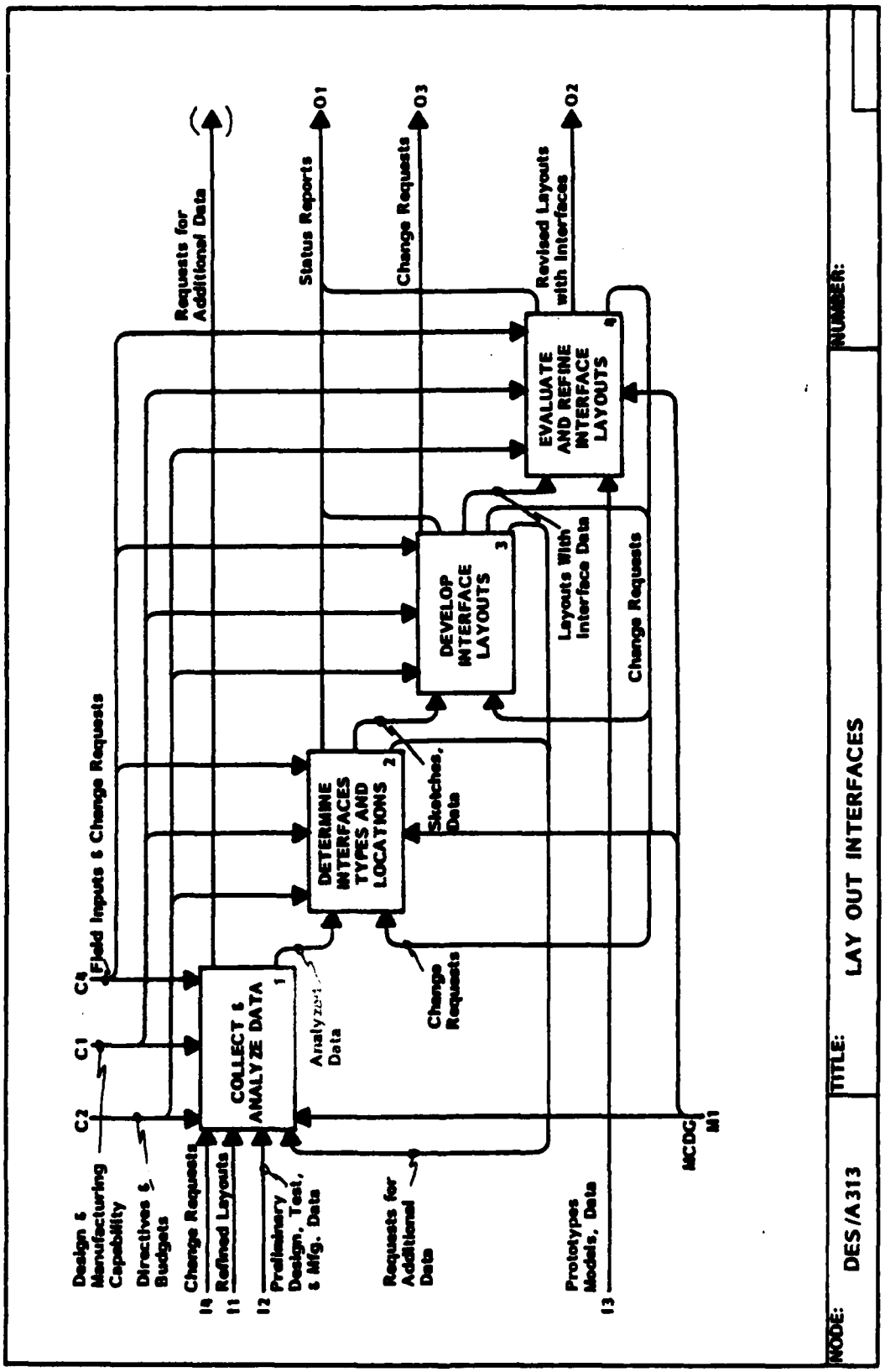
Requests for Additional Data
Status Reports
O1
Change Requests
O3
Revised Layouts with Interfaces
O2
EVALUATE AND REFINE INTERFACE LAYOUTS
4
DEVELOP INTERFACE LAYOUTS
3
Layouts With Interface Data
Change Requests
DETERMINE INTERFACES TYPES AND LOCATIONS
2
Sketches, Data
Change Requests
COLLECT & ANALYZE DATA
1
Analyzed Data
C4
Field Inputs & Change Requests
C1
C2
Design & Manufacturing Capability
Directives & Budgets
Change Requests
I4
Refined Layouts
I1
Preliminary Design, Test, & Mfg. Data
I2
Requests for Additional Data
Prototypes Models, Data
I3
MCDC
M1
NODE:
DES/A313
TITLE:
LAY OUT INTERFACES
NUMBER:

A314 ANALYZE AND REFINE FOR TECHNOLOGICAL IMPACT

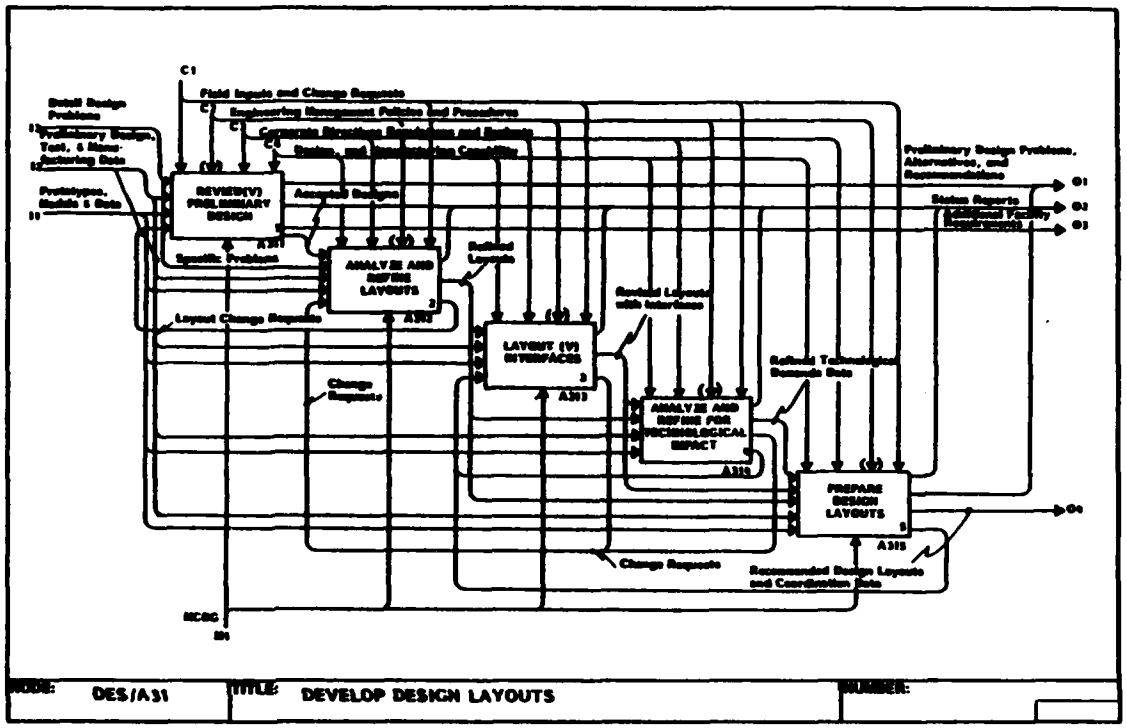

Box 1 – Assembles revised layouts with interfaces, refined layouts, and information from Preliminary Design, tests, Manufacturing, prototypes, and models to perform specific analyses on those areas or equipment requiring special emphasis or involving higher risks. These analyses are usually directed to the use of new or unique materials, processes, or concepts. There may be a request for additional data.

Box 2 – Utilizes the specific analysis data from box 1 as well as specific test information to examine external systems or loads.

Box 3 – Uses specific analysis and external systems data to perform internal systems, i.e., loads and stress examinations. If any information needs to be modified, it's fed back to box 2.

Box 4 – Applies information from internal and external systems as well as specific analysis in order to examine the interface between the structures and subsystems. The need for iterative data is fulfilled by box 3.

Box 5 – Evaluates and summarizes the information from the specific analysis, interface, and external and internal systems in order to assess the impact on the design.

Glossary

Specific Analysis Data

Information from the examination of areas requiring particular emphasis or involving higher risks.

Specific Test Data

Information from the results of particular, preliminary tests.

Schedules

Display the name of the person required to perform particular tasks as well as the due dates for the assignments.

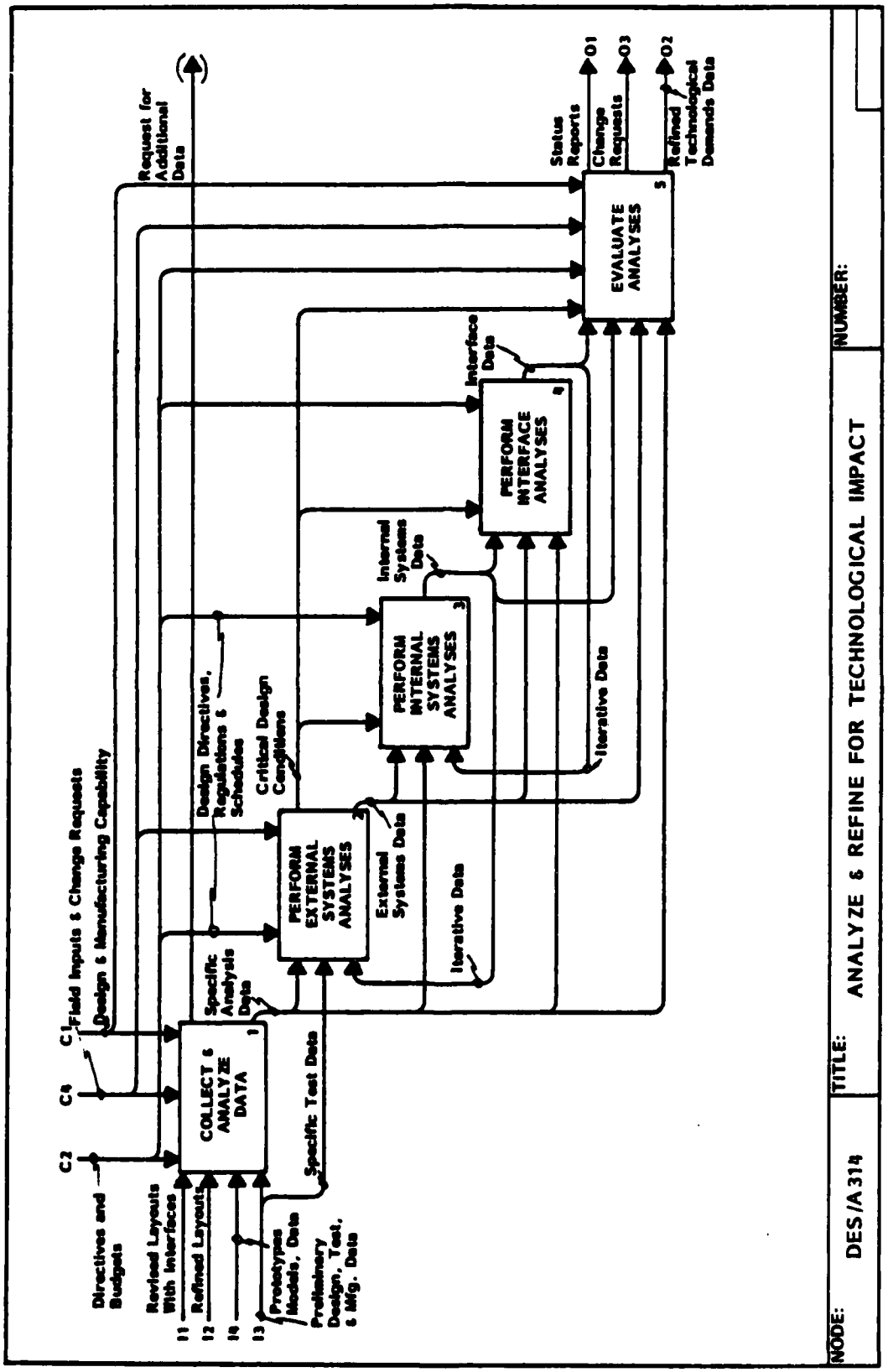
NODE:
DES/A314
TITLE:
ANALYZE & REFINE FOR TECHNOLOGICAL IMPACT
NUMBER:
C1
Field Inputs & Change Requests
Design & Manufacturing Capability
C4
C2
Directives and Budgets
Revised Layouts With Interfaces
I1
Refined Layouts
I2
I4
I3
Prototypes Models, Data
Preliminary Design, Test, & Mfg. Data
COLLECT & ANALYZE DATA
1
Specific Test Data
Specific Analysis Data
Design Directives, Regulations & Schedules
Critical Design Conditions
PERFORM EXTERNAL SYSTEMS ANALYSES
2
External Systems Data
Iterative Data
PERFORM INTERNAL SYSTEMS ANALYSES
3
Internal Systems Data
Iterative Data
PERFORM INTERFACE ANALYSES
4
Interface Data
EVALUATE ANALYSES
5
Request for Additional Data
Status Reports
O1
Change Requests
O3
Refined Technological Demands Data
O2

(A314 Glossary Continued)

Critical Design Conditions

The absolute minimum requirements needed for the performance of the product.

External Systems Data

The external loads information.

Internal Systems Data

The internal loads and stress information.

Iterative Data

Information which is modified in the analyses of systems.

Interface Data

The connected structures and systems information.

A315 PREPARE DESIGN LAYOUTS

Box 1 – Prepares the basic product layouts from Preliminary Design, test, Manufacturing, and refined technological demands data as well as the refined layouts.

Box 2 – Utilizes the end product from box 1, the refined technological demands data, and the revised layouts with interfaces in the preparation of the product interface layouts.

Box 3 – Uses the data from prototypes and models, the results from box 2 to assure that compatibility exists and to verify that all results of the layout development are evaluated and found acceptable for the preparation of the Detail Design layouts.

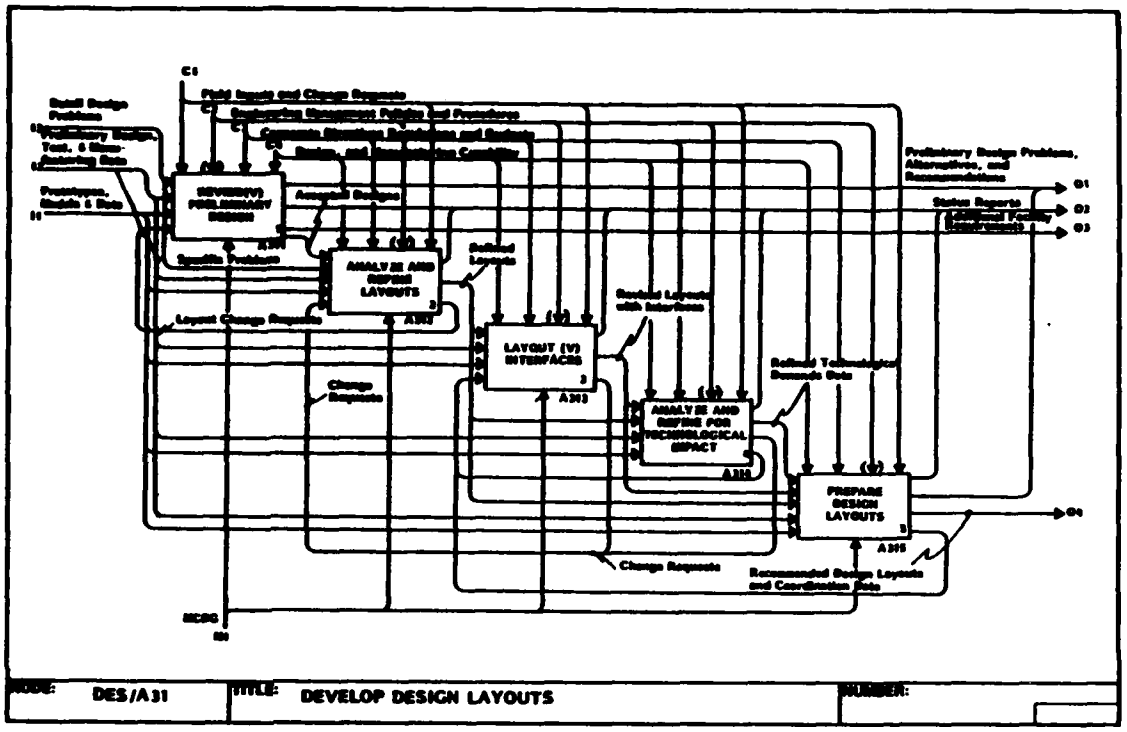

Glossary

Drafting Requirements Manuals and Design Manuals

Detailed descriptions of the procedure for preparing drawings and data.

Basic Layouts

Abbreviated drawings and data in sufficient detail and accuracy to guide Engineers and drafting personnel in the preparation of formal detail drawings and information.

Interface Layouts

Drawings and data depicting interface conditions.

FTR110410000U
8 September 1983

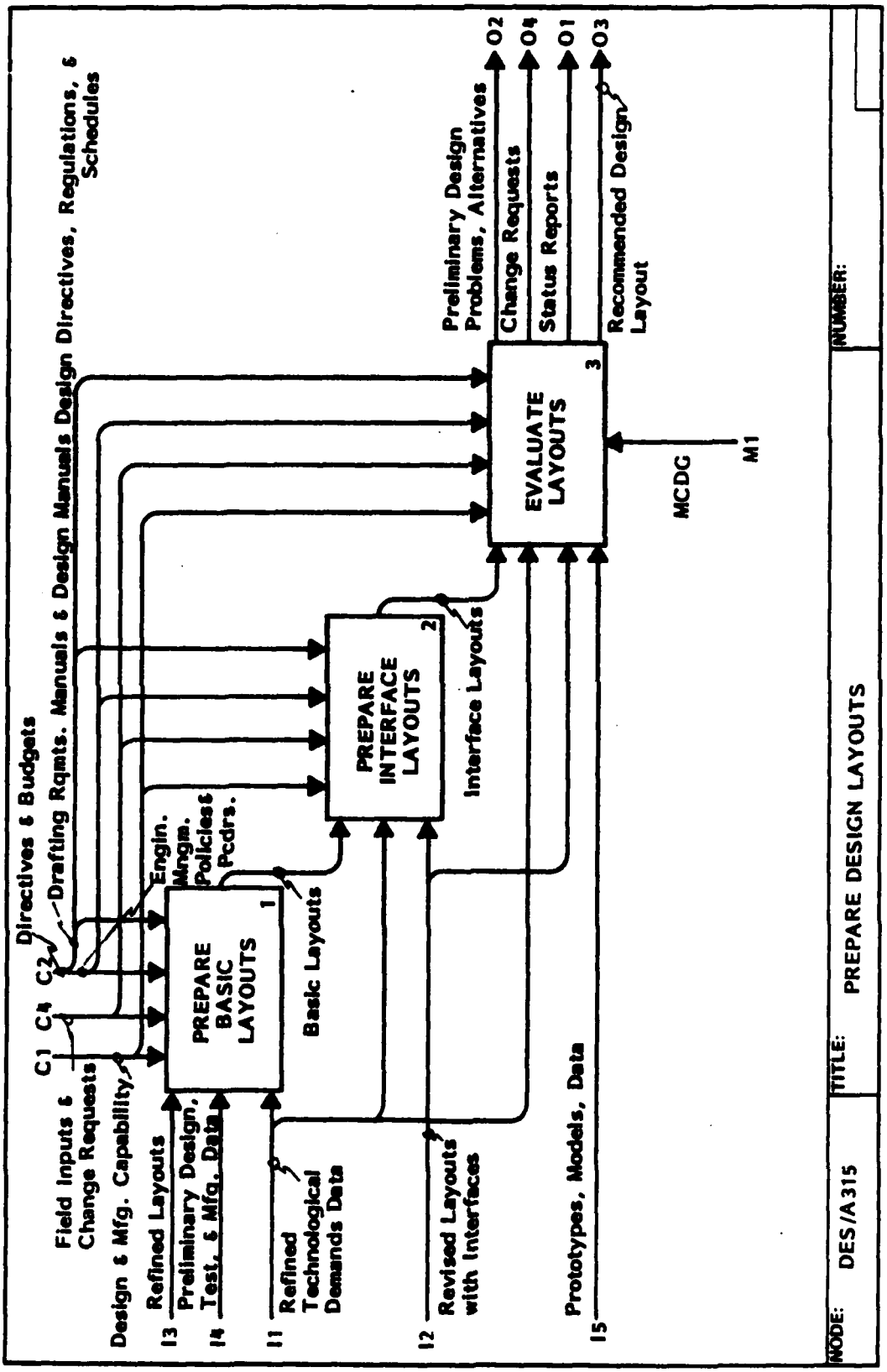
Directives & Budgets
Drafting Rqmts. Manuals & Design Manuals Design Directives, Regulations, & Schedules
C1 C4 C2
Field Inputs & Change Requests
Design & Mfg. Capability
Refined Layouts
Preliminary Design, Test, & Mfg. Data
I3
I4
PREPARE BASIC LAYOUTS
1
Engin. Mngm. Policies & Pcdrs.
Basic Layouts
I1
Refined Technological Demands Data
PREPARE INTERFACE LAYOUTS
2
Interface Layouts
I2
Revised Layouts with Interfaces
Prototypes, Models, Data
I5
EVALUATE LAYOUTS
3
MCDG
M1
Preliminary Design Problems, Alternatives
O2
Change Requests
O4
Status Reports
O1
Recommended Design Layout
O3
NODE: DES/A315
TITLE: PREPARE DESIGN LAYOUTS
NUMBER:

A32 PREPARE DETAIL DESIGN

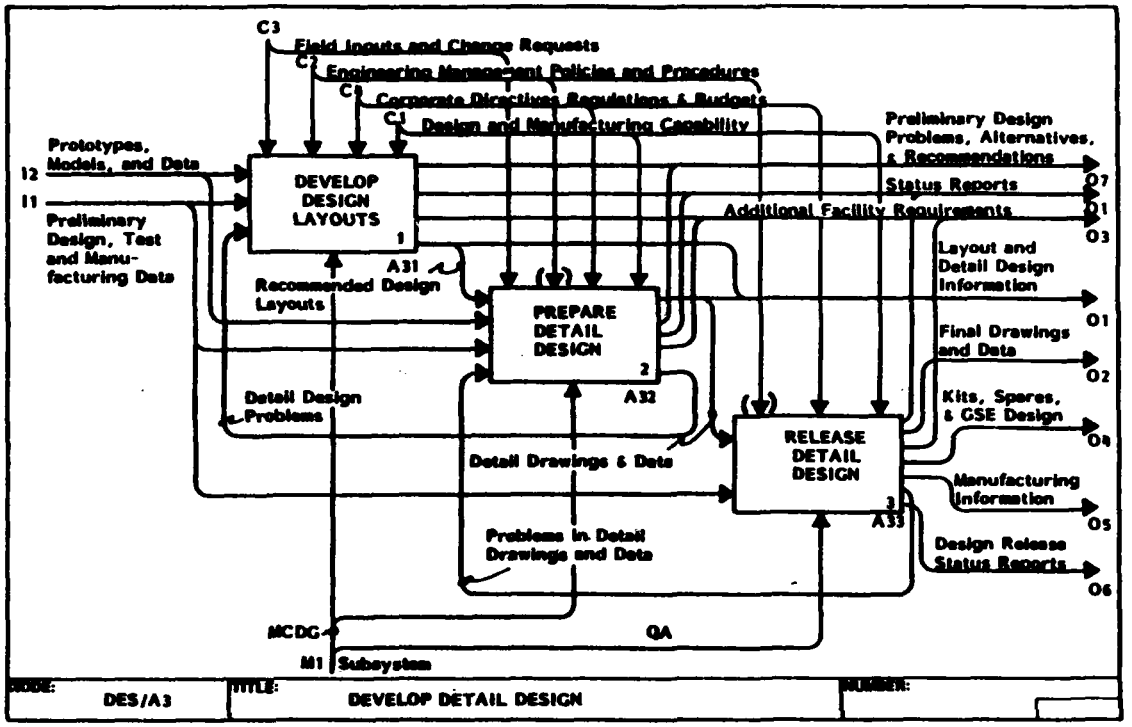

Box 1 – The recommended design layouts, problems, and other information are used to provide the formal media (drawings and information) which define the detail part(s). The drawings and data are then sent to Engineering and Manufacturing for review.

Box 2 – Reviews the recommended design layouts, the detail drawings and data, and information from prototypes, models, Preliminary Design, tests, and Manufacturing to substantiate that the form, fit, and function are acceptable. The review for form is primarily concerned with size and shape (installation and access). The review for fit concentrates on the interfacing of subsystems and structures (attachments and corrections). The review for function includes the purpose or use of the part, the effectiveness of its performance, weight, strength, and useful life, and the performance as applied to integrated logistic support, test engineering, production engineering, transportability, reliability and maintainability engineering, value engineering, safety engineering, electromagnetic compatibility and standardization. Any problems stemming from this activity are fed back to box 1 for corrections.

Box 3 – Applies the same data used by box 2 and reviews the Detail Design to substantiate that the part is efficiently producible within established constraints. Producibility includes cost, ease of manufacture, availability of processes, assembly or installation, and skills and training. Problems deriving from this activity are rectified in box 1.

Box 4 – Employs the detail drawings and data from box 1 and advance Detail Design information from boxes 2 and 3 to finalize the drawings and data. The activity makes sure that the drawings and information are completed to the degree that they give sufficient and comprehensive data to build, check, and install the part(s); i.e., parts produced by any Manufacturer are identical. This also includes geometry, materials, tolerance, part func-

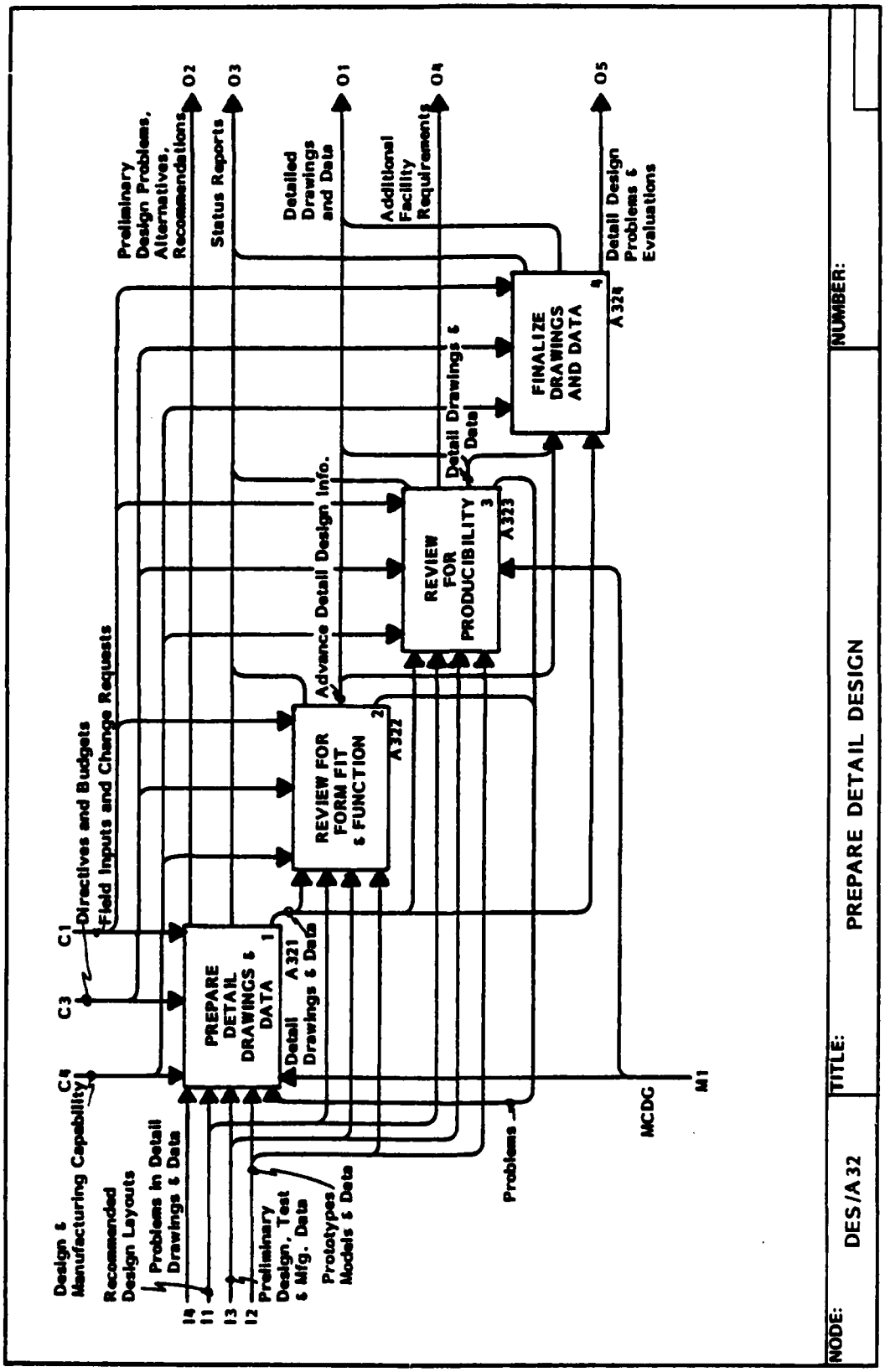
NODE:
DES/A32
TITLE:
PREPARE DETAIL DESIGN
NUMBER:
C1
Directives and Budgets
Field Inputs and Change Requests
C3
C4
Design & Manufacturing Capability
Recommended Design Layouts
Problems In Detail Drawings & Data
I4
I1
I3
I2
Preliminary Design, Test & Mfg. Data
Prototypes Models & Data
PREPARE DETAIL DRAWINGS & DATA
1
A321
Detail Drawings & Data
REVIEW FOR FORM FIT & FUNCTION
2
A322
Advance Detail Design Info.
REVIEW FOR PRODUCIBILITY
3
A323
Detail Drawings & Data
FINALIZE DRAWINGS AND DATA
4
A324
Problems
MCDC
M1
O2
Preliminary Design Problems, Alternatives, Recommendations
O3
Status Reports
O1
Detailed Drawings and Data
O4
Additional Facility Requirements
O5
Detail Design Problems & Evaluations

(A32 Continued)

tion, and processes to be used. Advance material orders and work statements are corrected, the status of the task is reported, and all of the information is updated and gathered in an identified package ready for release.

Glossary

Detail Drawings and Data (unreviewed)

Used in reviewing for form, fit, function, and producibility. They are not finalized.

Advance Detail Design Information

Data presented to other Design disciplines and Manufacturing groups (from their requests or need to know) to coordinate and familiarize all concerned of what the final design will probably be and to expect feedback where conflicts or serious objections may exist.

Problems From Form, Fit, and Function Review

Problems with the size, shape, interfacing subsystems, structure, purpose, and effectiveness of the part (from the design information).

Problems From Producibility Review

Problems with the cost, ease of manufacture, and assembly or installation of the part (from the design information).

A321 PREPARE DETAIL DRAWINGS AND DATA

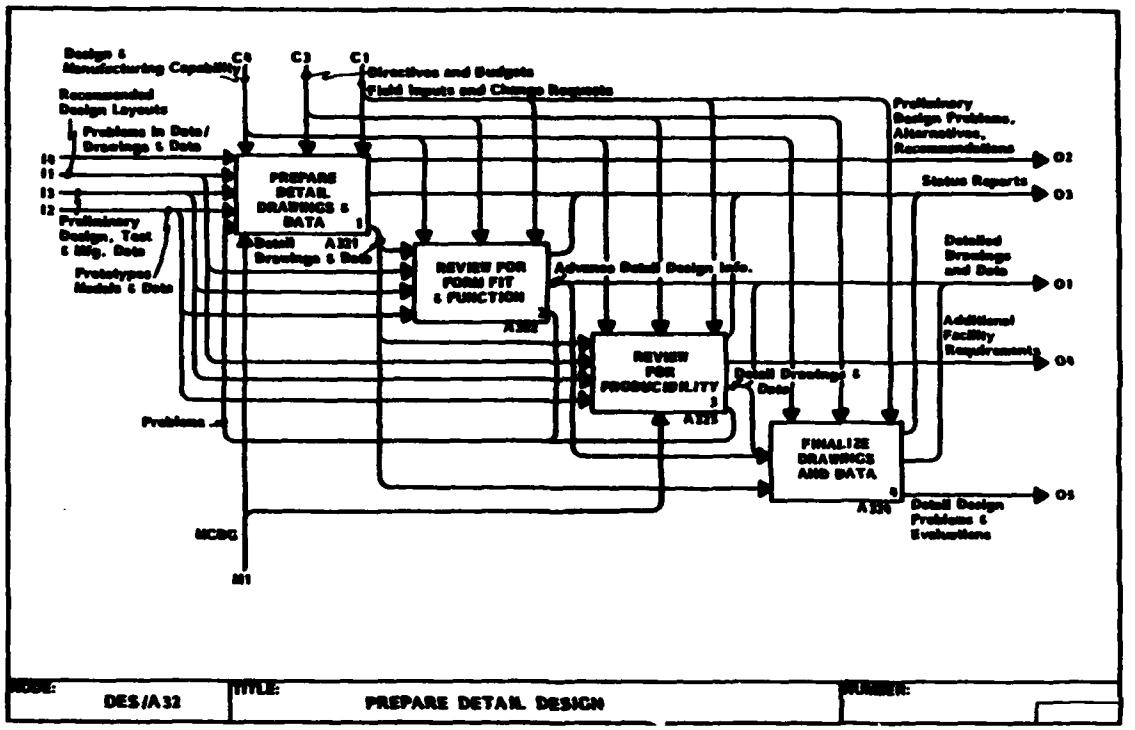

Box 1 – Uses the recommended design layouts, data from prototypes, models, Preliminary Design, tests, and Manufacturing, and problems, including those from the form, fit, and function review, in the planning of the drawings and data forms, which are devised to facilitate their preparation and to be the most satisfactory for production methods to be used.

Box 2 – Utilizes the accepted layouts and plan for data display from box 1, in addition to other information, for the preparation of the Detail Designs.

Box 3 – Employs the Detail Design to distribute the unreleased drawings and data. These are sent for review and comments to Engineering staffs and Production departments who are involved with, or who have expertise and background on, the detail part of similar detail parts in all aspects of design, function, materials, usage, and fabrication.

Glossary

Accepted Layouts and Plan for Data Display

Accepted layouts are those, which after review, appear to answer all of the questions drafting personnel might have in preparing a formal detail drawing of the design; the plan for data display is used for the arrangement of the information and depicts the medium on which it is presented, such as vellum and dimentionally stable mylar.

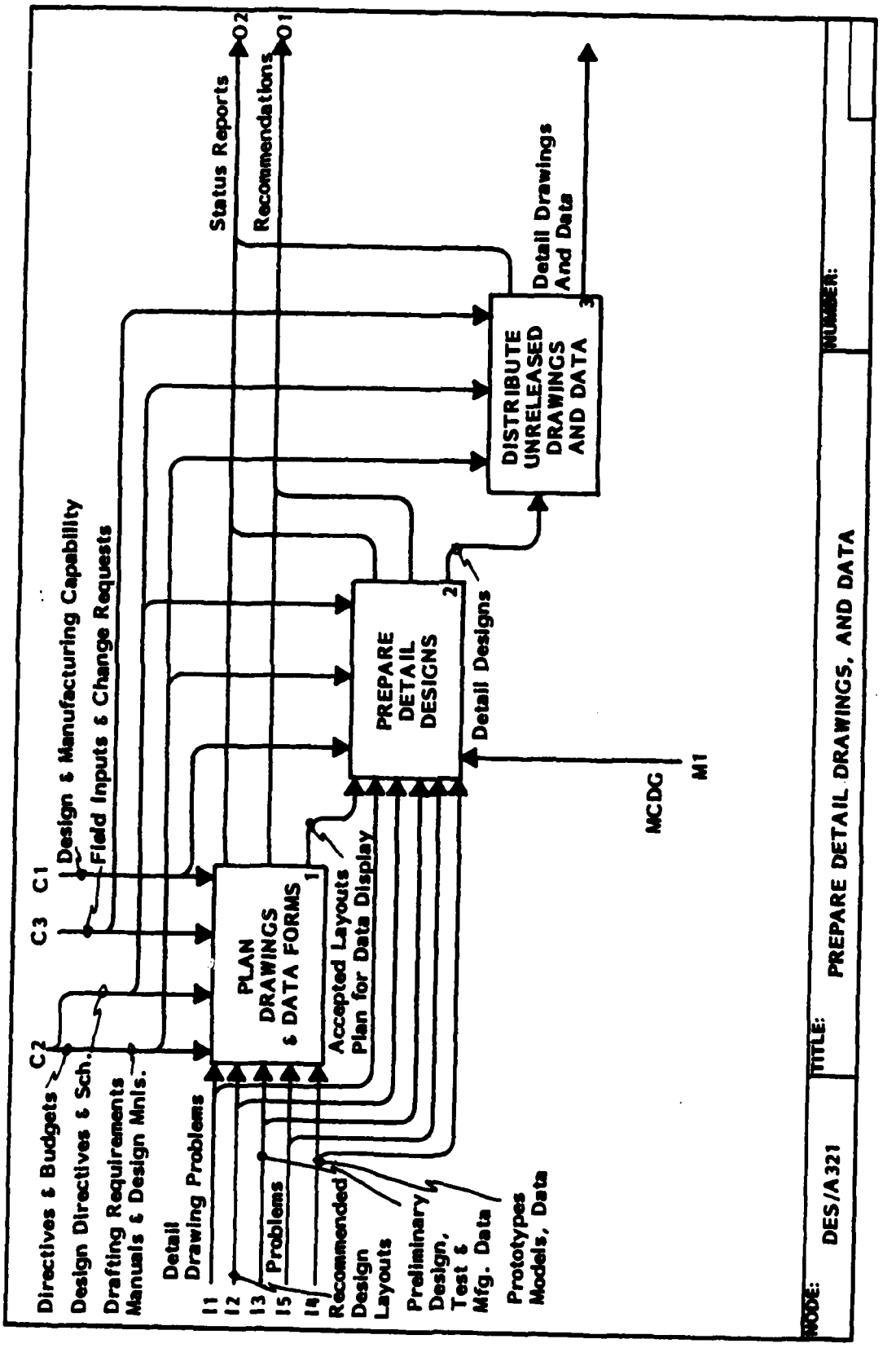
Directives & Budgets
Design Directives & Sch.
Drafting Requirements
Manuals & Design Mnls.
Detail
Drawing Problems
C2
C3
C1
Design & Manufacturing Capability
Field Inputs & Change Requests
I1
I2
I3
I5
I4
Problems
Recommended
Design
Layouts
Preliminary
Design,
Test &
Mfg. Data
Prototypes
Models, Data
PLAN
DRAWINGS
& DATA FORMS
1
Accepted Layouts
Plan for Data Display
PREPARE
DETAIL
DESIGNS
2
Detail Designs
MCDC
M1
DISTRIBUTE
UNRELEASED
DRAWINGS
AND DATA
3
Detail Drawings
And Data
Status Reports
O2
Recommendations
O1
NUMBER:
TITLE:
PREPARE DETAIL DRAWINGS, AND DATA
NODE:
DES/A321

A322 REVIEW FOR FORM, FIT, AND FUNCTION

Box 1 – The envelope drawings and mock-up results are reviewed. This is accomplished by employing drawing layouts and checking and mock-up demonstrations to evaluate the shape of the product to be installed in its intended location. Also included in the activity, is the capability to remove and replace the product for maintenance purposes or adequate clearances for "in-place" inspections and maintenance. Discrepancies are returned for solutions.

Box 2 – Reviews the physical subsystem interface requirements. This is done by evaluating the compatibility of the product design with other attaching parts. It includes securing the product to matching structure or other parts, connecting the product to power, such as electrical, and assuring that the product is congruous with the intended environment.

Box 3 – Reviews the performance test and analysis results of the product to determine that it will function as intended. It also evaluates the degree of compliance to requirements.

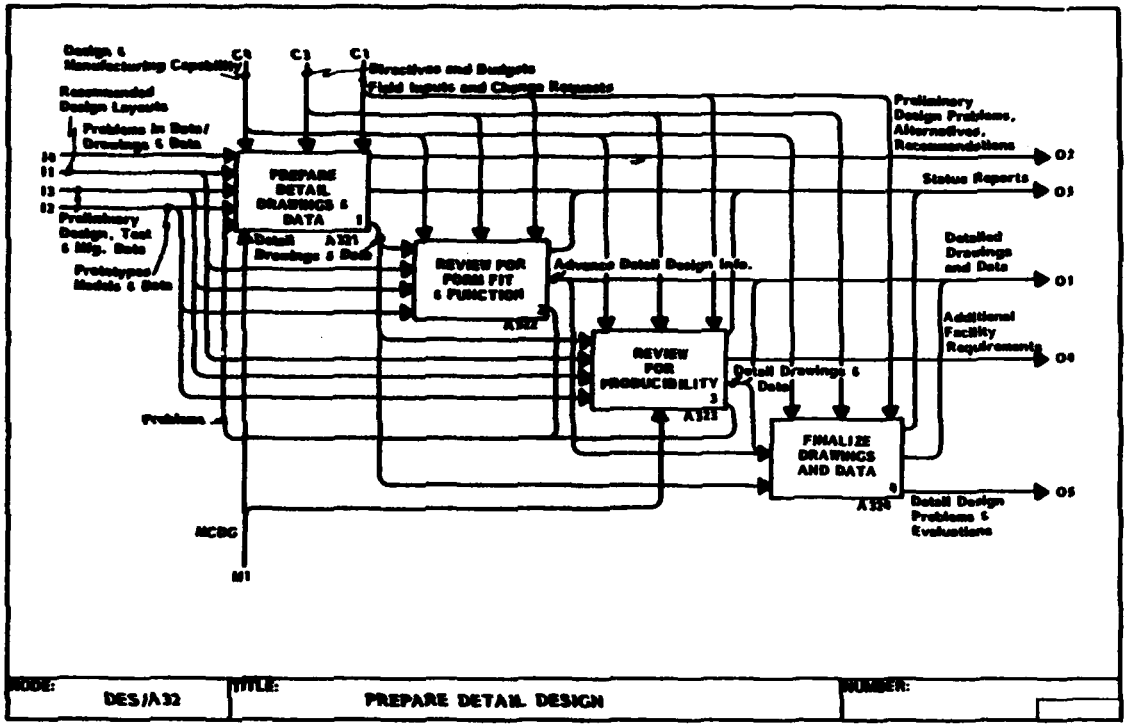

Glossary

Acceptable Shape

The positive determination that the form of the product design meets the criteria necessary to allow for installation and access.

Acceptance Interface

The positive determination that the product design meets compatibility criteria to allow for the product to be secured and connected to other subsystems or structures.

Acceptable Functional Interchangeability

The positive determination that the product design has performed as defined by the design and performance specifications.

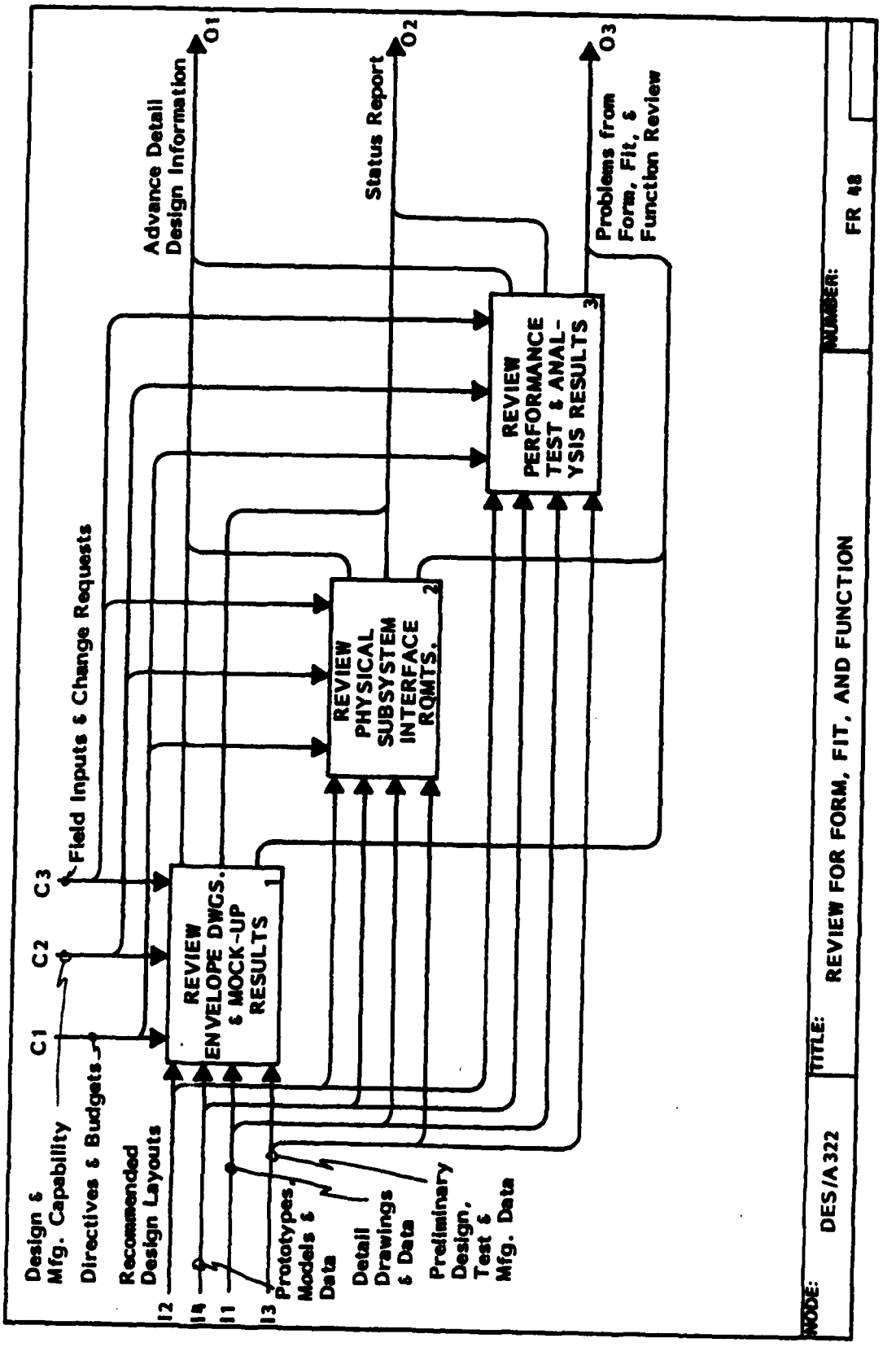
Design & Mfg. Capability
Directives & Budgets
Recommended Design Layouts
C1
C2
C3
Field Inputs & Change Requests
I2
I4
I1
I3
Prototypes, Models & Data
Detail Drawings & Data
Preliminary Design, Test & Mfg. Data
REVIEW ENVELOPE DWGS. & MOCK-UP RESULTS 1
REVIEW PHYSICAL SUBSYSTEM INTERFACE RQMTS. 2
REVIEW PERFORMANCE TEST & ANAL-YSIS RESULTS 3
Advance Detail Design Information
O1
Status Report
O2
Problems from Form, Fit, & Function Review
O3
NODE:
DES/A322
TITLE:
REVIEW FOR FORM, FIT, AND FUNCTION
NUMBER:
FR 48

A323 REVIEW FOR PRODUCIBILITY

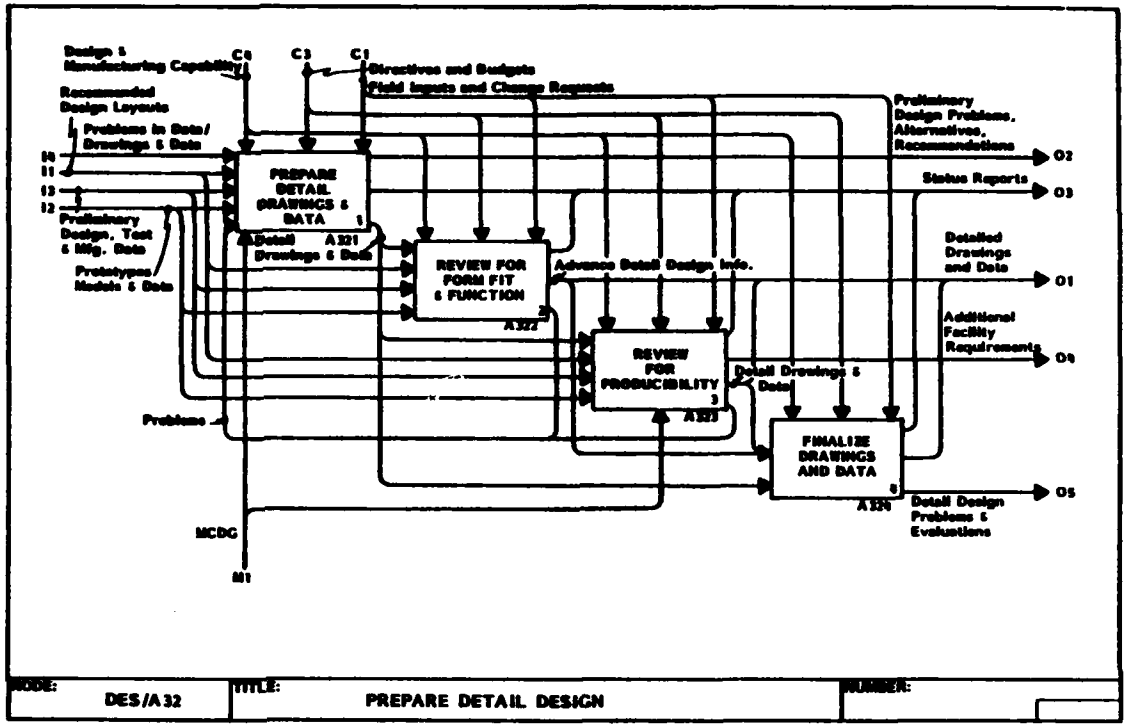

Box 1 – Reviews the capability to produce. This is accomplished by evaluating the producibility analysis, the transformation of engineering inputs into system effectiveness and trade studies, and the consideration of material, tools, test equipment, facilities, skills, and training which support Manufacturing. Critical or special producibility requirements that impose a constraint on the design are returned as problems or included in the applicable specifications.

Box 2 – Utilizes the producibility and value engineering requirements from box 1 to review the design for cost impact. This activity sets up target costs or thresholds to predict design, procurement, and manufacturing costs and to evaluate the effect of design changes or alternate design approaches. A continuous effort is applied throughout the program to monitor and evalaute the design process. The effort is more important when the contract cost is indenturized and heavily weighted.

Box 3 – Uses the high cost-low value, high risk, and alternatives information from box 2 to evaluate the producibility results. This is done by reexamining and reviewing the integration of technical, economical, and facility aspects of design and the intended manufacturing and fabrication processes. It then makes the producibility determination.

Glossary

Producibility and Value Engineering Requirements

Substantiate that a product is producible within defined parameters in relation to materials, cost, manufacturing ease, availability, and assembly.

High Cost-Low Value, High Risk, and Alternatives

Factors which govern and impact the processes under which the determination of producibility is ascertained.

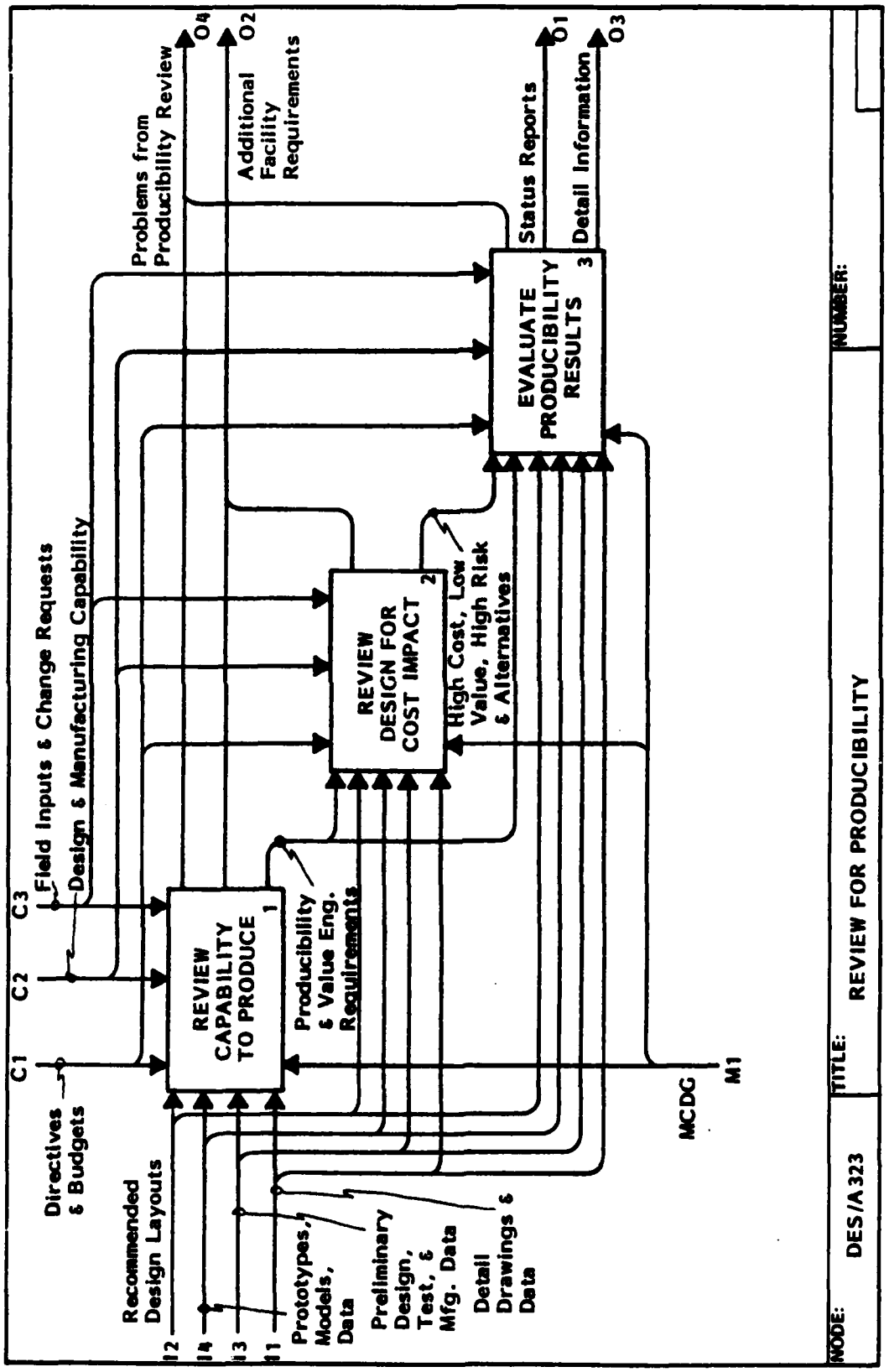
C1
C2
C3
Directives & Budgets
Field Inputs & Change Requests
Design & Manufacturing Capability
REVIEW CAPABILITY TO PRODUCE 1
REVIEW DESIGN FOR COST IMPACT 2
EVALUATE PRODUCIBILITY RESULTS 3
Recommended Design Layouts
I2
I4
I3
I1
Prototypes, Models, Data
Preliminary Design, Test, & Mfg. Data
Detail Drawings & Data
Producibility & Value Eng. Requirements
High Cost, Low Value, High Risk & Alternatives
Problems from Producibility Review
O4
Additional Facility Requirements
O2
Status Reports
O1
Detail Information
O3
MCDC
M1
NODE:
DES/A323
TITLE:
REVIEW FOR PRODUCIBILITY
NUMBER:

A324 FINALIZE DRAWINGS AND DATA

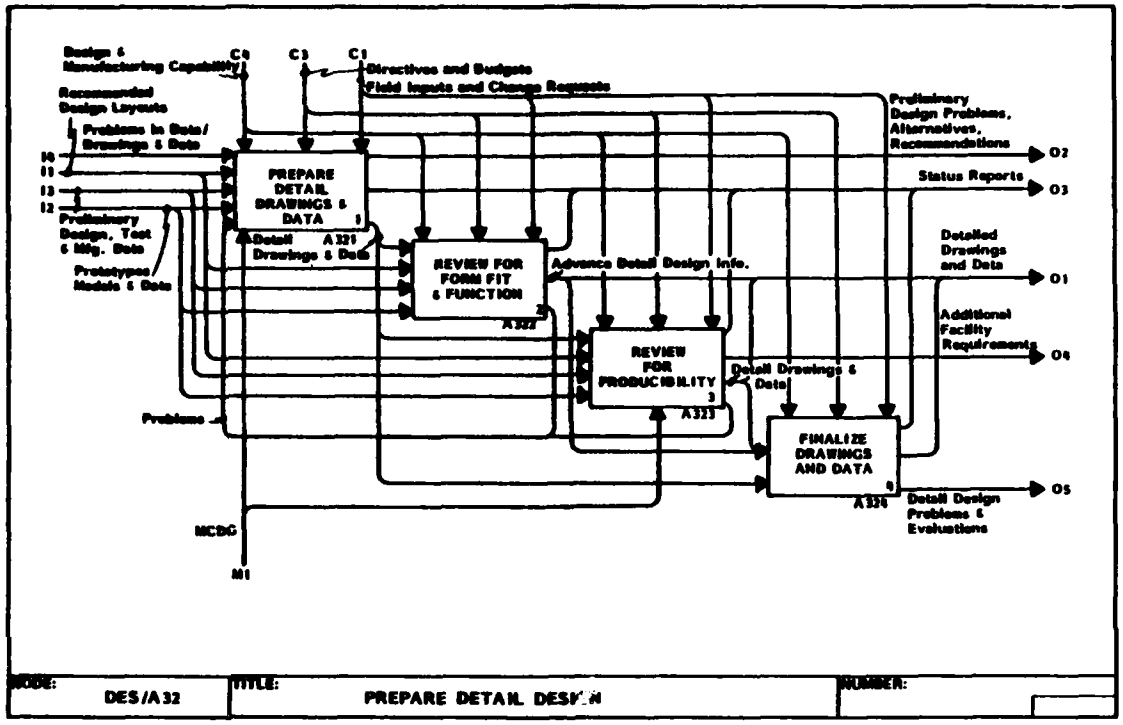

Box 1 – Drawings and design data are completed for formal release. This activity involves adding the standard specifications callouts, tabulating the parts list to show variations in assemblies, optional materials, and fasteners, and affixing a section or view for clarification.

Box 2 – Uses the completed drawings and data from box 1 to finalize the supplementary information which has been created for coordinating the design with other Design groups and with Production. In this activity, advance material orders are revised to reflect the final requirement, suspend-memos are resumed or changed to cancel for certain parts, the statement of work and tooling coordination data are updated, other memos are revamped to indicate the formal drawing as conveyor of data rather than previous layouts, and release schedules are amended to show actuals versus scheduled releases for both input and output.

Box 3 – Utilizes the coordination data from box 2 and the completed drawings and design data from box 1 in the preparation of the release package. The package includes an inventory list, indicating scheduled and actual release dates, detail drawings and data, updated material orders and tool coordination information, production memos, and engineering authorization to make the parts.

Glossary

Completed Drawings and Design Data

Additions or changes made to the drawings and information in order to make them thorough enough for formal release.

Coordination Data

Packages the design data, updates production memos and advance materials orders, and puts all previously released information in agreement.

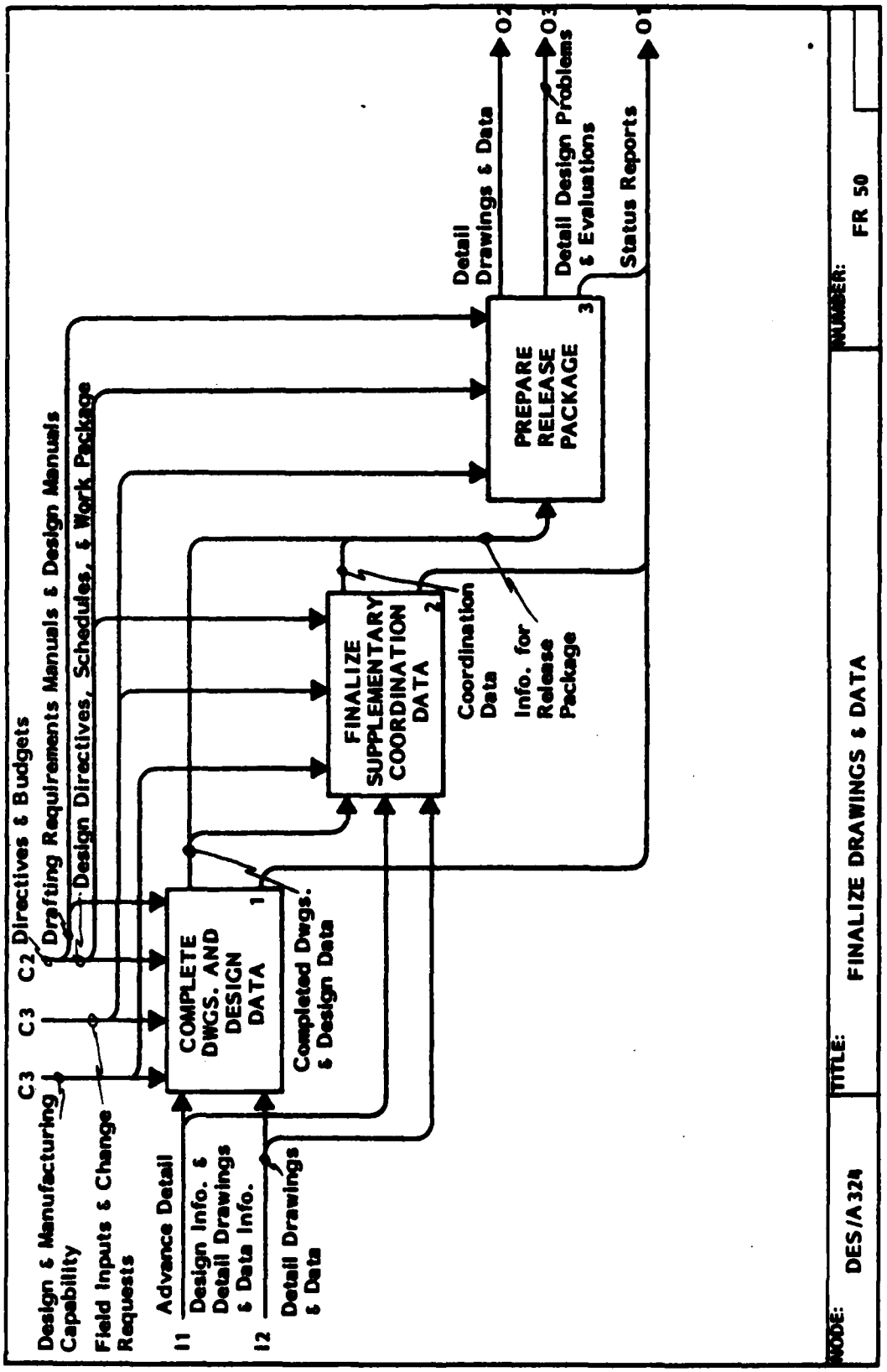
C3
C3
C2
Design & Manufacturing Capability
Field Inputs & Change Requests
Directives & Budgets
Drafting Requirements Manuals & Design Manuals
Design Directives, Schedules, & Work Package
Advance Detail
I1
Design Info. & Detail Drawings & Data Info.
I2
Detail Drawings & Data
COMPLETE DWGS. AND DESIGN DATA
1
Completed Dwgs. & Design Data
FINALIZE SUPPLEMENTARY COORDINATION DATA
2
Coordination Data
Info. for Release Package
PREPARE RELEASE PACKAGE
3
Detail Drawings & Data
O2
Detail Design Problems & Evaluations
O3
Status Reports
O1
NUMBER:
FR 50
TITLE:
FINALIZE DRAWINGS & DATA
NODE:
DES/A324

A33 RELEASE DETAIL DESIGN

Box 1 – Approval of the Detail Design is obtained by collecting and assuring completeness of the detail drawings, the information thereof, and data from Preliminary Design, Tests, Manufacturing, Operations, and Logistics. In addition, the activity guarantees that the detail design and entire data has been reviewed and approved by authorized personnel of all disciplines, that the traceability of design decisions to the design and performance requirements is confirmed and completely documented, and that all necessary release documentation is prepared and authorized. One of the constraints on this activity is the design and manufacturing capability.

Box 2 – Releases and controls the approved design drawings, data, and release schedules. The activity involves the formal processing of the many forms of data through the release system, which contains the checks and balances necessary to broadcast new information to the users, void existing or obsolete information, and to control legitimate data.

Box 3 – Utilizes the final design drawings, data product design, documentation parts list, geometry, kits, spares, the ground support equipment design, manufacturing information, actual release dates, and tool coordination data and material requirements from Box 2 as well as design problems, approval problems, and actual approval dates from Box 1 to report the Detail Design release status. This is the final activity of the Detail Design effort which provides current status of a released product baseline definition. The output is the actual Design (comprised of some of the results from Box 2). Any problems with the release status could be fed back to the second activity for correction.

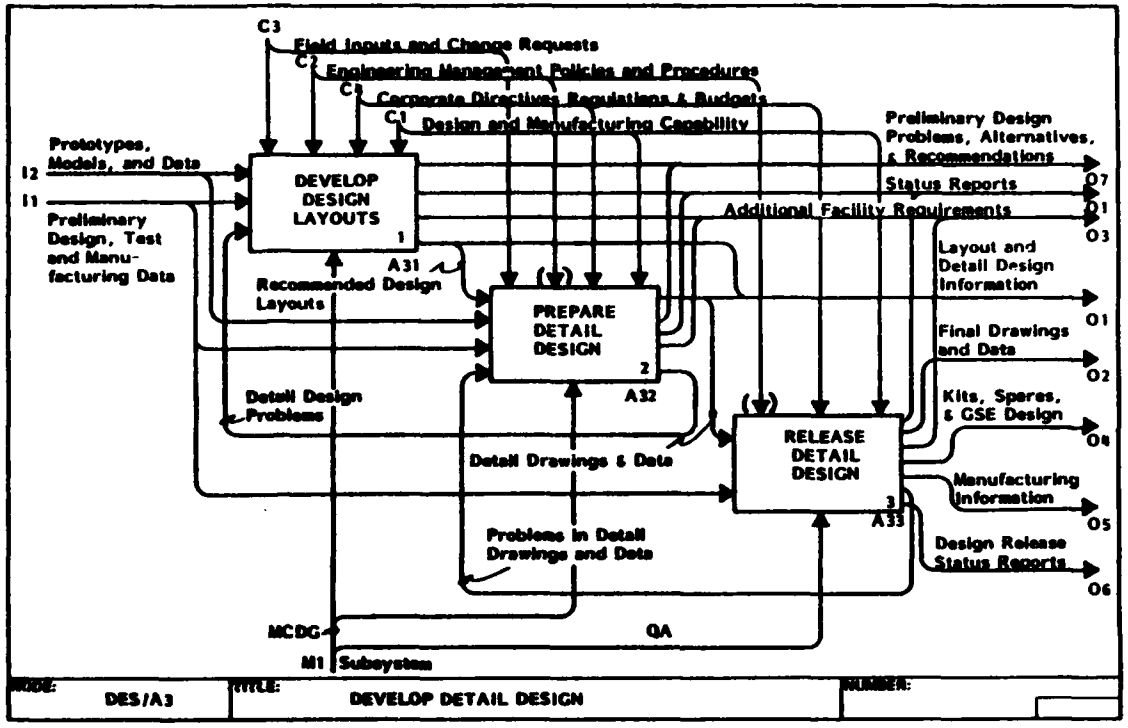

Glossary

Approved Design Drawings, Data and Release Schedules

Accepted documentation released by Engineering Design, the engineering staff, and Manufacturing departments.

This is given to the Release group and shows the priority of manufacturing or procurement needs.

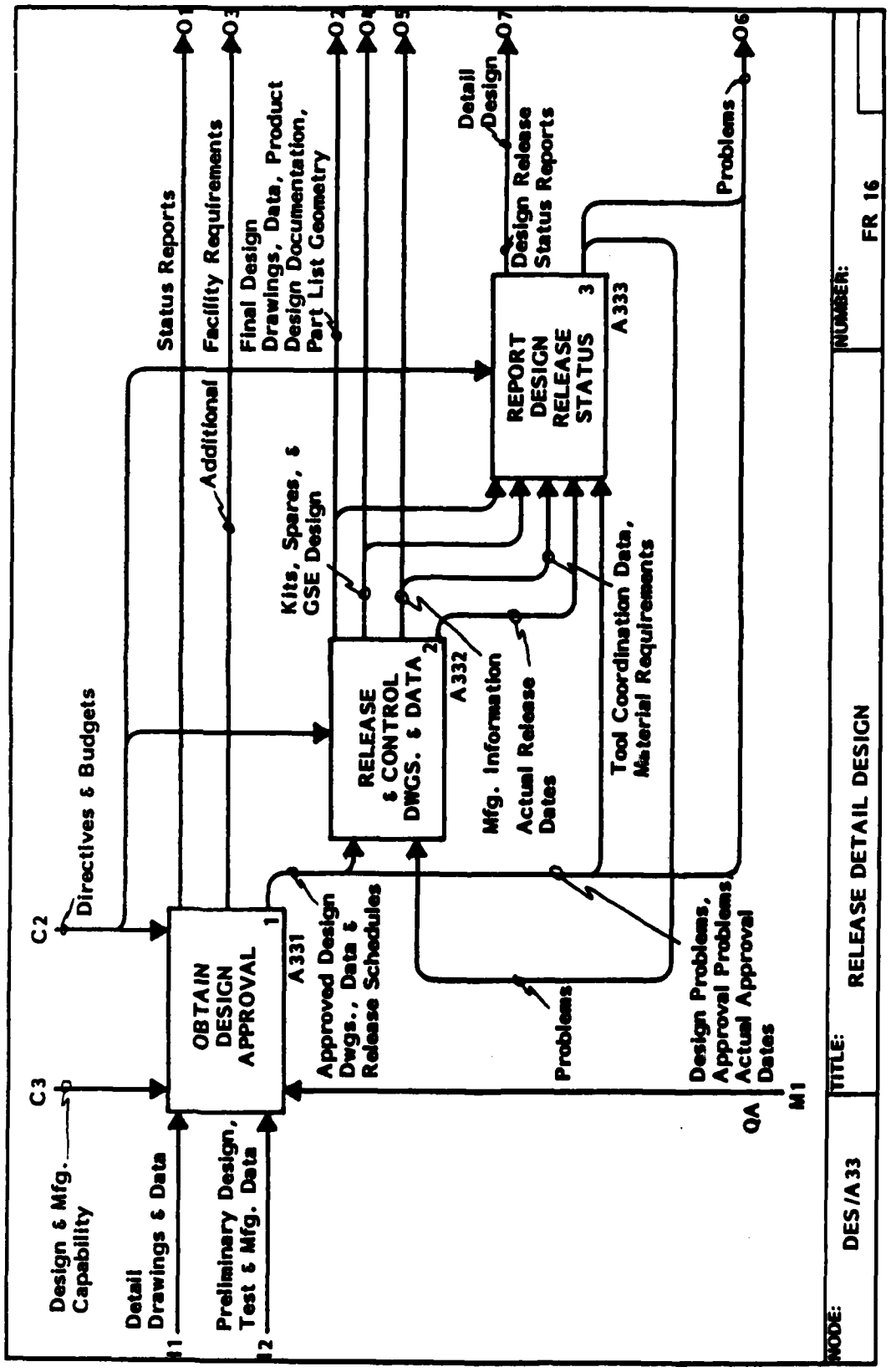
Status Reports
Facility Requirements
Final Design Drawings, Data, Product Design Documentation, Part List Geometry
Detail Design
Design Release Status Reports
Problems
Additional
Kits, Spares, & GSE Design
REPORT DESIGN RELEASE STATUS
3
A333
RELEASE & CONTROL DWGS. & DATA
2
A332
Mfg. Information
Actual Release Dates
Tool Coordination Data, Material Requirements
Directives & Budgets
C2
OBTAIN DESIGN APPROVAL
1
A331
Approved Design Dwgs., Data & Release Schedules
Problems
Design Problems, Approval Problems Actual Approval Dates
C3
Design & Mfg. Capability
Detail Drawings & Data
Preliminary Design, Test & Mfg. Data
I1
I2
QA
M1
NODE:
DES/A33
TITLE:
RELEASE DETAIL DESIGN
NUMBER:
FR 16

(A33 Glossary Continued)

Design Problems, Approval Problems, and Actual Approval Dates

Problems disclosed during the design approval activity which must be resolved by redoing the detail drawings.

Action items that are directed back to the activity of "Prepare Detail Design," and will involve repeating the approval cycle on the recommended solution.

The exact month, day, and year that the detail drawings and data were accepted.

Final Design Drawings, Data, Product Design Documentation, Parts List, and Geometry

Comprised of data complete to the degree that it provides complete information required to procure, build, check, install, test, and maintain parts and assemblies.

Kits, Spares, and Ground Support Equipment (GSE) Design

Consist of design, drawings, and instructional data needed to specify the requirements for field retrofits and configuration modification/enhancements in support of the product. Also, the spare designs are similar to final design drawings with additional information on alternate manufacturing methods.

Represents design, drawings, and data needed to manufacture the equipment which, in turn, services the product on the ground.

Manufacturing Information

Comprised of design, drawings, and data intended specifically to support manufacturing requirements, e.g., tool coordination, material, order data, etc. It also includes requests for qualification and testing of new producibility concepts, new materials, and methods to be performed by Manufacturing for revalidation purposes as well as process and finish specifications.

Tool Coordination Data and Material Requirements

The manufacturing planning data to utilize current resources.

Actual Release Dates

Exact month, day, and year of data release to correlate with procurement and manufacturing needs.

Design Release Status Reports

Provides the periodic design release status. Any problems arising during the approved cycle are also logged and followed through. Staff and schedule performance are included as part of the status.

Problems

These result from release schedule slippage and need for "work around" plans.

A331 OBTAIN DESIGN APPROVAL

Box 1 Uses the detail drawings and data as well as information from Preliminary Design, Tests, and Manufacturing to perform checking functions and sign off for the Detail Design. This is accomplished (when applicable) as follows: First, the Design group supervisors review each document prepared or changed to their direction to ensure compliance to equipment requirements. The documents are then evaluated for conformity to the Drawing Requirements Manual, e.g., uniformity in legibility, reproducibility, completeness, dimension correctness, tolerance compatibility, accuracy, and application of design and drafting standards, by the Check group. The review and approval of the documents for structural integrity are performed by the Stress group. The Materials and Producibility group evaluates and approves those drawings and their associated parts list which call out material and/or material processing specifications to verify correct application of such specifications and materials, finish callouts, and producibility. Finally, the Weight Control group reviews and confirms all new and revised numbered drawings and Change Engineering Orders, for determination of actual weight to assure that minimum weight has been achieved. The design and manufacturing capability is a constraint on this activity.

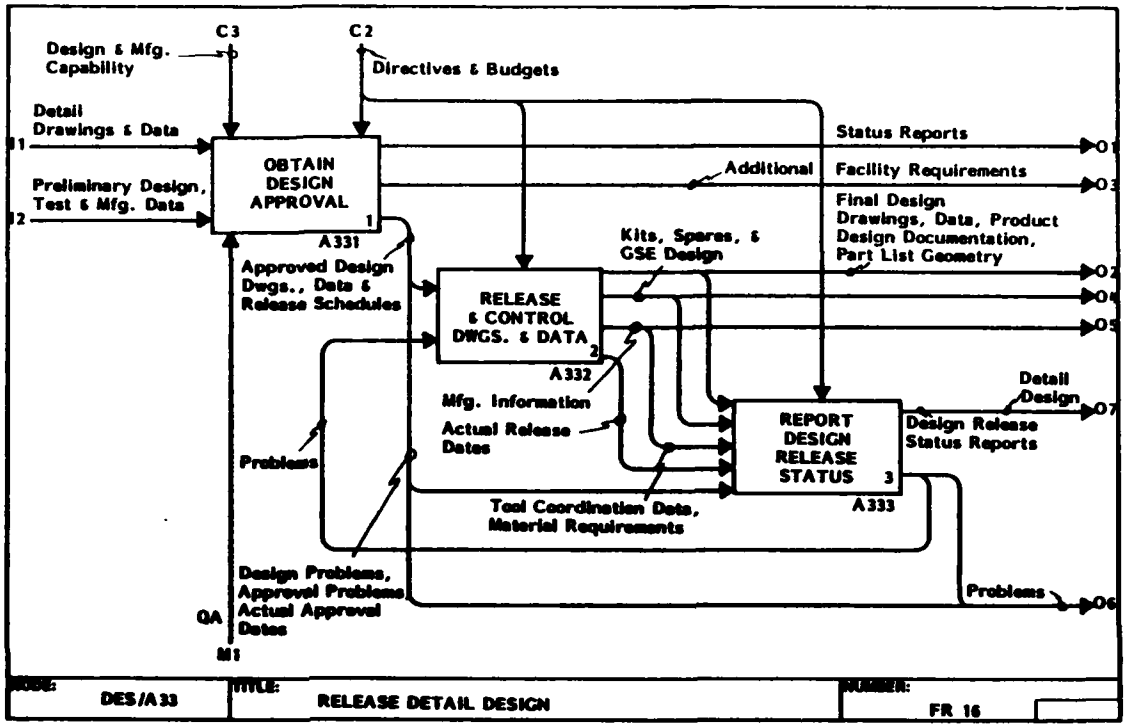

Box 2 – Utilizes the signed checkprint or data copy and comments to review and approve the design by the originating group. This group incorporated on the drawing original appropriate checkprint information received from the checking functions. Differences of opinion related to changes shall be negotiated and resolved on an expedited basis. The originating group supervisor then signs the document to certify that it complies with applicable requirements. One of the outputs is the information only copy to Operations Production Engineering, which is a tunneled arrow.

Box 3 – Employs the signed original drawing or data in the preparation of the release documentation. The Originating Design group provides the release forms for processing by the Engineering Release System.

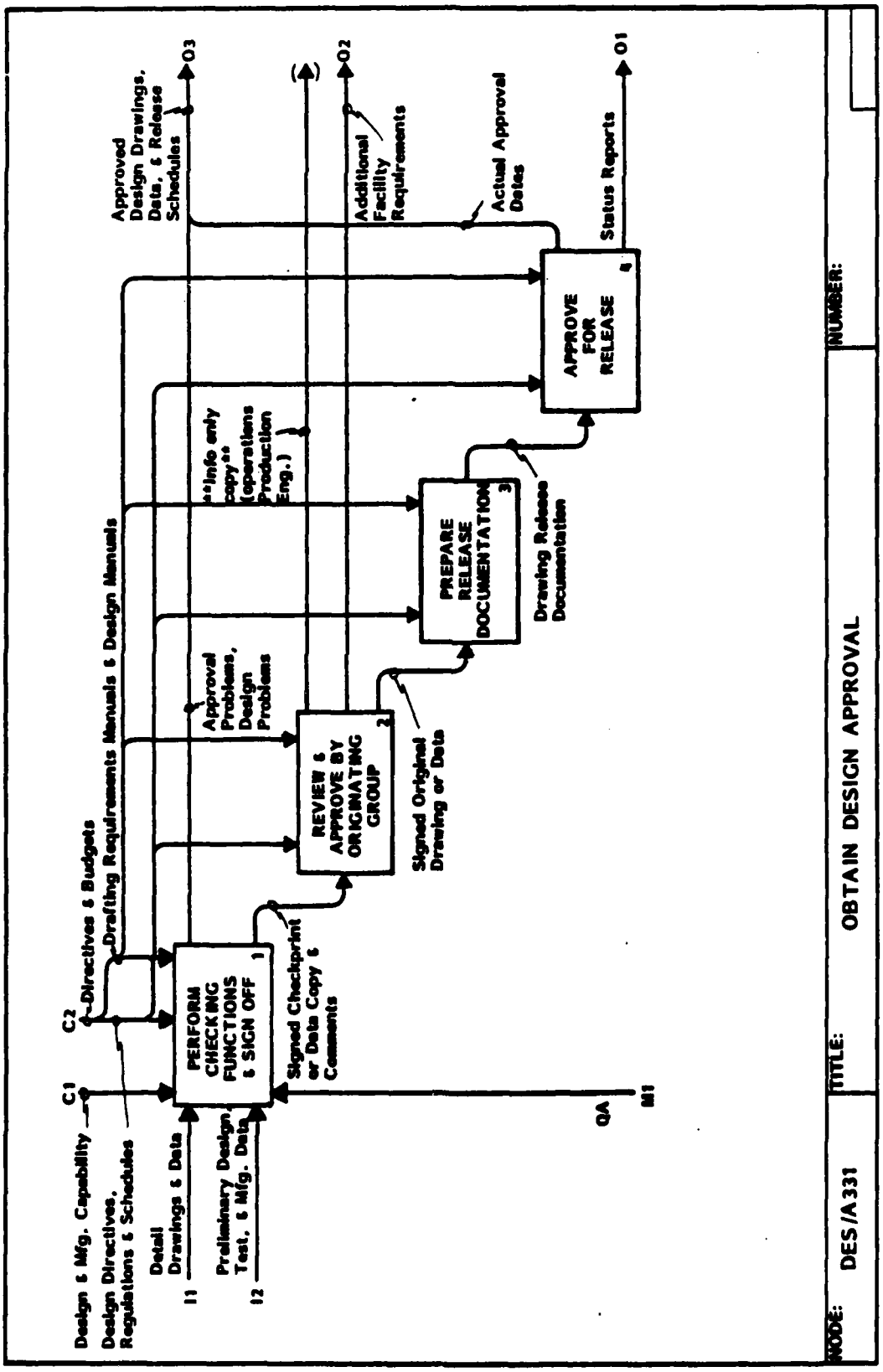
Approved Design Drawings, Data, & Release Schedules
O3
O2
Additional Facility Requirements
Actual Approval Dates
Status Reports
O1
APPROVE FOR RELEASE
4
Info only copy (operations Production Eng.)
PREPARE RELEASE DOCUMENTATION
3
Drawing Release Documentation
Approval Problems, Design Problems
REVIEW & APPROVE BY ORIGINATING GROUP
2
Signed Original Drawing or Data
Directives & Budgets
Drafting Requirements Manuals & Design Manuals
C2
C1
PERFORM CHECKING FUNCTIONS & SIGN OFF
1
Signed Checkprint or Data Copy & Comments
QA
M1
Design & Mfg. Capability
Design Directives, Regulations & Schedules
Detail Drawings & Data
I1
Preliminary Design, Test, & Mfg. Data
I2
NODE:
DES/A331
TITLE:
OBTAIN DESIGN APPROVAL
NUMBER:

(A331 Continued)

Box 4 – Applies the drawing release documentation in approving the design for release. The program management (project engineers) sign the document and the release forms as final authorization for release.

Glossary

Signed Checkprint or Data Copy and Comments

A marke-up checkprint which shows review comments and is endorsed to approve the drawing. There may be other noted comments included.

Signed Original Drawing or Data

Drawing, which incorporates all resolved review comments, and is signed by the supervision of the originating group.

Information Only Copy

Advance reproduction of the drawing which has review comments incorporated but has not been processed through the formal release cycle. It is to be used as advance planning data but not for manufacture.

Drawing Release Documentation

Consists of actual drawings with associated data, including Engineering Orders, negotiated schedules, material used information, and tooling coordination data.

A332 RELEASE AND CONTROL DRAWINGS AND DATA

Box 1 – The approved design drawings, information, and schedules are released. Among the outputs are the final design drawings, data, product design documentation, parts list geometry, kits, spares, and group support equipment design.

Box 2 – Releases the tooling coordination data. This data, the tooling coordination drawings, and information from Manufacturing are some of the results of the activity.

Box 3 – Uses material requirements in the release advance orders. Advance orders are engineering-initiated papers listing out of the ordinary materials and parts that may have long lead-time in procurement. Some of the end products are production memos and material orders.

Problems, which need to be resolved, are input to all three boxes, directives and budgets, which consist of design directives, regulations, and schedules, and drafting requirements and design manuals are constraints on each function, and actual release dates are outcomes common to every activity.

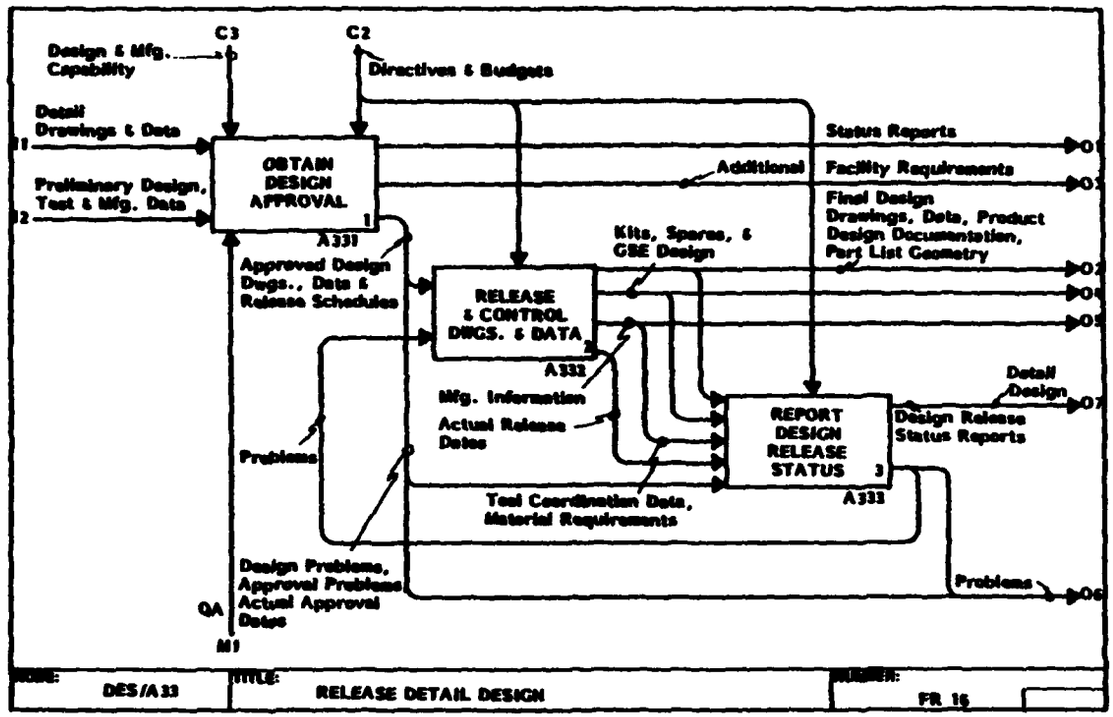

Glossary

Tooling Coordination Drawings and Data

Consist of baselines, production joint faces, hinge centerlines, centerline locations of basic items, tooling holes, trim allowance, and bend line information.

Material Requirements

Type of material needed for the part.

Production Memos, Material Orders

Procurement documentation showing quantity and schedules based on approved drawings and data as well as materials used information.

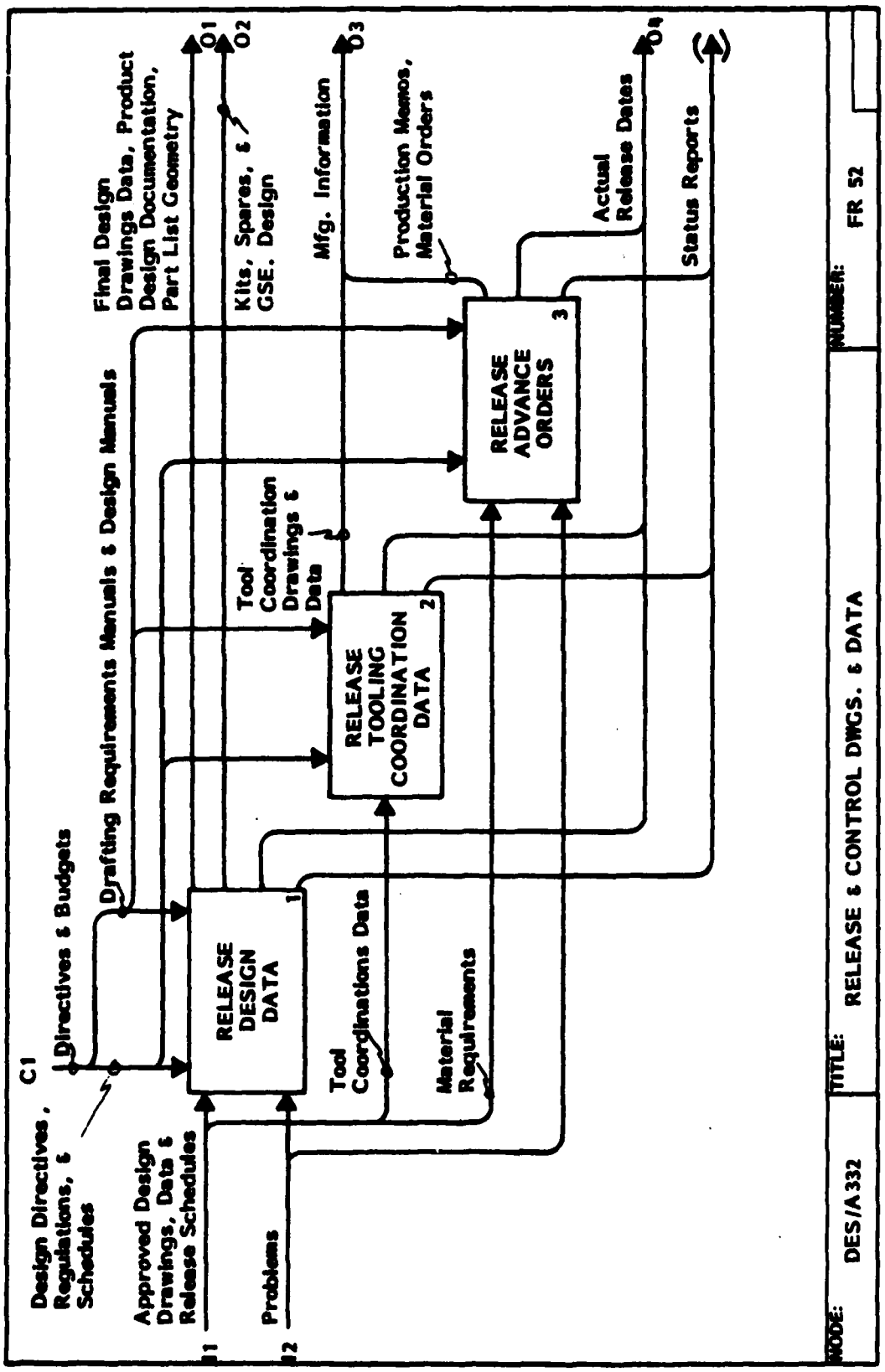
Design Directives, Regulations, & Schedules
C1
Directives & Budgets
Drafting Requirements Manuals & Design Manuals
Approved Design Drawings, Data & Release Schedules
I1
Problems
I2
RELEASE DESIGN DATA
1
Final Design Drawings Data, Product Design Documentation, Part List Geometry
O1
Kits, Spares, & GSE. Design
O2
Tool Coordination Drawings & Data
Tool Coordinations Data
Material Requirements
RELEASE TOOLING COORDINATION DATA
2
Mfg. Information
O3
Production Memos, Material Orders
RELEASE ADVANCE ORDERS
3
Actual Release Dates
O4
Status Reports
NODE:
DES/A332
TITLE:
RELEASE & CONTROL DWGS. & DATA
NUMBER:
FR 52

A333 REPORT DESIGN RELEASE STATUS

Box 1 – Uses the final design drawings and data, product design documentation, part list geometry, kits, spares, the ground support equipment design, the detail design and approval problems, the actual approval dates, the tool coordination information and material requirements to perform the release recording/activity. This involves documenting the release information for official record, transcribing the completion of scheduling basic releases of Engineering documents, providing photographic records of documents, providing photographic records of documents, usually in the form of microfilm copy, and producing sufficient reproductions to fulfill the distribution requirements to various functional disciplines, such as Manufacturing, Logistics, Purchasing, and Quality Assurance.

Box 2 – Utilizes the recorded documents from Box 1 to update the engineering drawings and data that have been prepared via the interactive computer-aided design program as well as the file for operations use in developing and maintaining tool design drawings and numerical control information. The outputs of this activity are the released status files, tool design, numerical control activity files, and the product baseline.

Box 3 – Employs the recorded documents from Box 1 to release the document

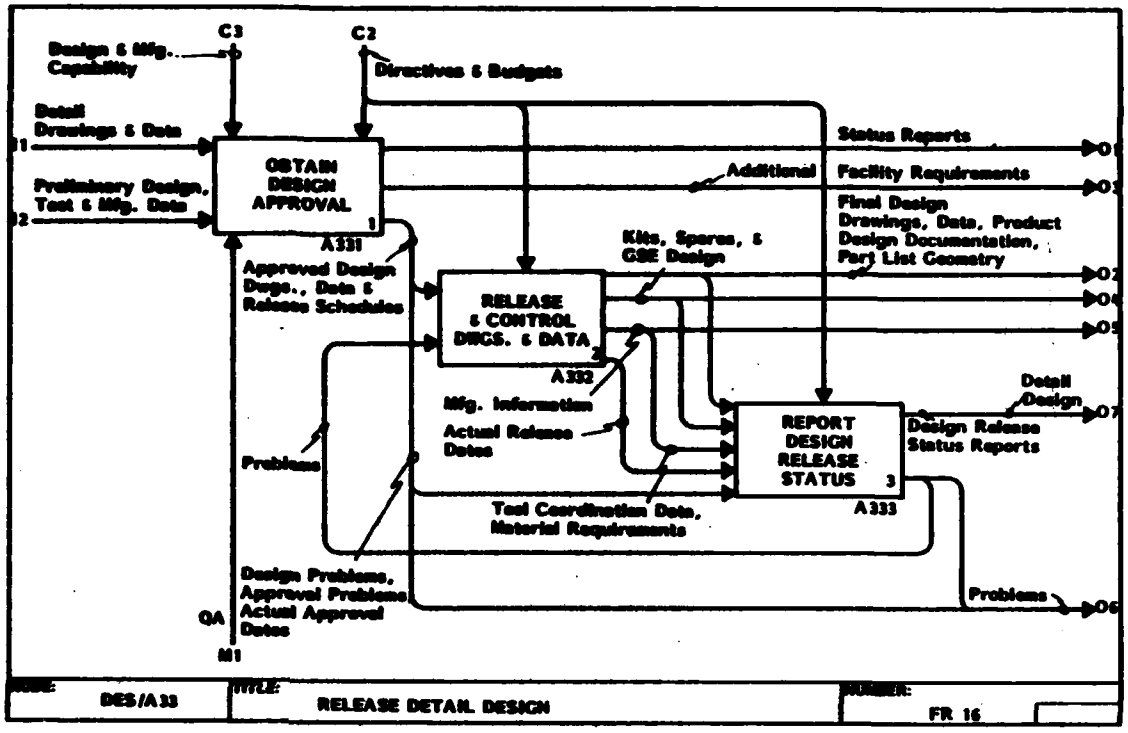

control file. This file contains data and designs which have been finalized, processed through the Engineering Release System and extracted from the Engineering Activity File. It will be "read only" data controlled by Design Support. One of the outputs is the design release status reports.

The actual release dates are inputs to all three boxes and the directives and budgets, comprised of design directives, regulations, and schedules as well as drafting requirements and design manuals, are controls on each activity.

Glossary

Recorded Documents

Documents listed in the official record.

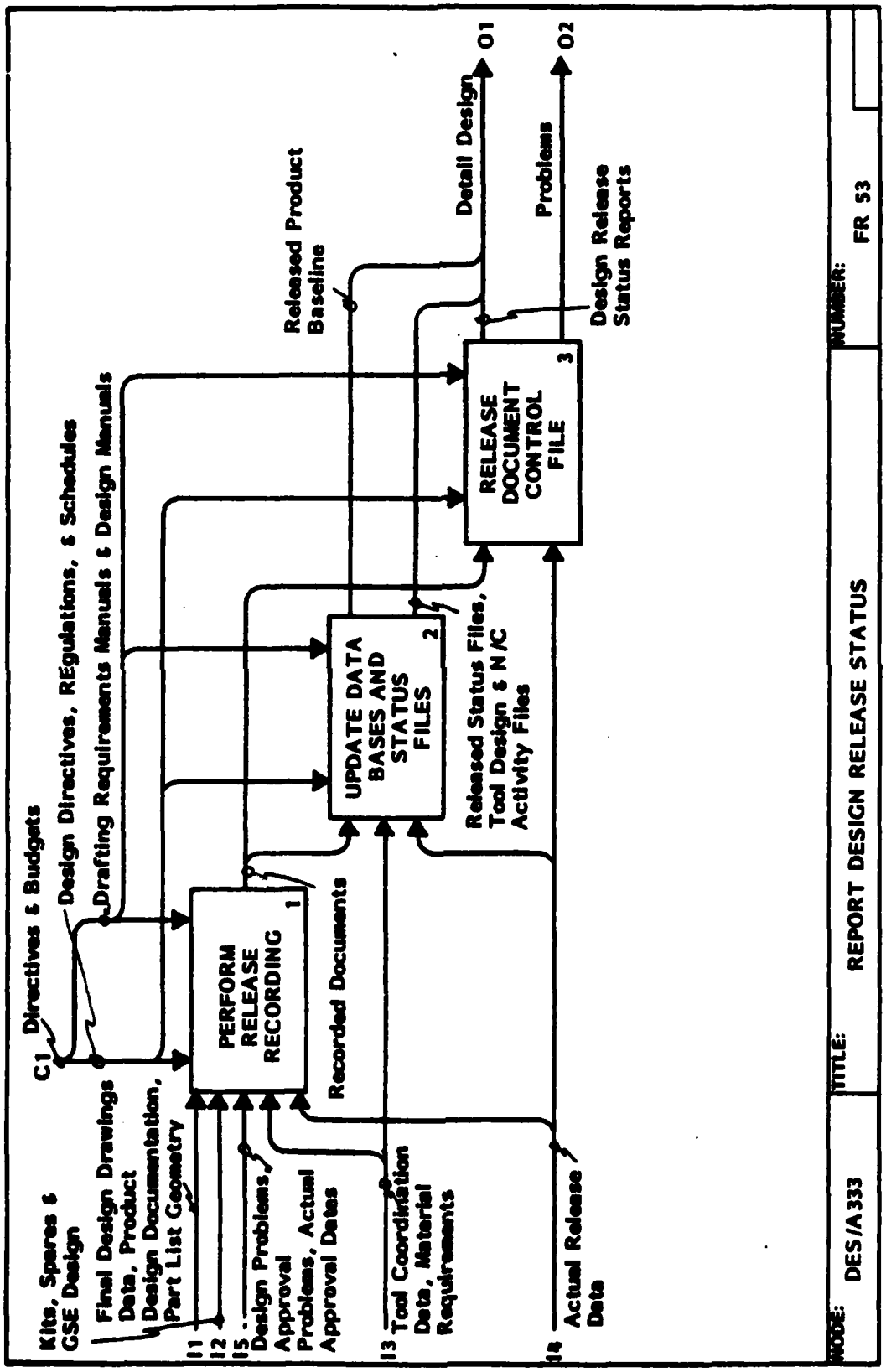
C1
Directives & Budgets
Design Directives, REgulations, & Schedules
Drafting Requirements Manuals & Design Manuals
Kits, Spares & GSE Design
Final Design Drawings Data, Product Design Documentation, Part List Geometry
I1
I2
I5
Design Problems, Approval Problems, Actual Approval Dates
I3
Tool Coordination Data, Material Requirements
I4
Actual Release Data
PERFORM RELEASE RECORDING
1
Recorded Documents
UPDATE DATA BASES AND STATUS FILES
2
Released Status Files, Tool Design & N/C Activity Files
Released Product Baseline
RELEASE DOCUMENT CONTROL FILE
3
Detail Design
O1
Problems
O2
Design Release Status Reports
NODE:
DES/A333
TITLE:
REPORT DESIGN RELEASE STATUS
NUMBER:
FR 53

Released Status File, Tool Design, and Numerical Control Activity Files

A current file for Operations use in developing and maintaining tool design drawings and numerical control data. It also includes the record of completion of the Manufacturing and Engineering negotiated schedule for basic releases.

Released Product Baseline

Complete documentation describing the designed product.

FTR110410000U
8 September 1983

SECTION 4
ARCHITECTURE PART III - Final Report
DOCUMENT REQUEST ORDER FORM

SUBMIT DOCUMENT REQUESTS TO: AFWAL/MLTC
ICAM Program Library
Wright-Patterson AFB OH 45433

VOLUME NUMBER AND MANAGEMENT NUMBER	TITLE OF DOCUMENT	CHECK (✓)
AFWAL-TR-82-4063	VOLUME I - Architecture Part III Accomplishments	( )
AFWAL-TR-82-4063	VOLUME II - Procedures	( )
AFWAL-TR-82-4063	VOLUME III - Composite Function Model of "Design Product" (DESO)	( )
AFWAL-TR-82-4063	VOLUME IV - Composite Information Model of "Design Product" (DESI)	( )
AFWAL-TR-82-4063	VOLUME V - Composite Function Model of "Manufacture Product" (MFGO)	( )
AFWAL-TR-82-4063	VOLUME VI - Composite Information Model of "Manufacture Product" (MFGI)	( )
AFWAL-TR-82-4063	VOLUME VII - MFGO1 Glossary	( )
AFWAL-TR-82-4063	VOLUME VIII - Technology Transfer	( )

PLEASE PRINT

NAME: MAIL CODE:

TITLE:

PHONE NUMBER:

DEPARTMENT:

COMPANY:

STREET OR P.O. BOX:

CITY: STATE: ZIP:

REQUIREMENT FOR DOCUMENT

Document(s) requested for the purpose of (intended use and program/project application must be provided):

U.S. GOVERNMENT PRINTING OFFICE—759-062/948