LEVEL II

CG-D-68-81
DOT-TSC-USCG-81-4

Feasibility Study Utilizing Meteor Burst Communications for Vessel Monitoring

12

AD A109004

R.E. Leader

Meteor Communications Consultants, Inc
Kent WA 98031

DTIC
ELECTE
DEC 30 1981
S D
H

November 1981
Final Report

DTIC FILE COPY

This document is available to the public through the National Technical Information Service, Springfield, Virginia 22161.

U.S. Department of Transportation
United States Coast Guard

Office of Research and Development
Washington DC 20593

81 12 28 028

NOTICE

This document is disseminated under the sponsorship of the U.S. Departments of Defense and Transportation in the interest of information exchange. The U.S. Government assumes no liability for its contents or use thereof.

Technical Report Documentation Page

1. Report No. CG-D-68-81	2. Government Accession No. AD-A109004	3. Recipient's Catalog No.
4. Title and Subtitle FEASIBILITY STUDY UTILIZING METEOR BURST COMMUNICATIONS FOR VESSEL MONITORING		5. Report Date November 1981
		6. Performing Organization Code DTS-531
7. Author(s) R.E. Leader		8. Performing Organization Report No. DOT-TSC-USCG-81-4
9. Performing Organization Name and Address Meteor Communications Consultants, Inc.* 1819 So. Central Ave. #26 Kent WA 98031		10. Work Unit No. (TRAIS) CG-209/R-2012
		11. Contract or Grant No. DTRS-57-80-C-00171
12. Sponsoring Agency Name and Address U.S. Department of Transportation United States Coast Guard Office of Research and Development Washington DC 20590		13. Type of Report and Period Covered Final Report Sep. 1980 - Apr. 1981
		14. Sponsoring Agency Code G-DST-3

15. Supplementary Notes

*Under contract to: U.S. Department of Transportation
Research and Special Programs Administration
Transportation Systems Center
Cambridge MA 02142

16. Abstract

This document discusses the feasibility of using meteor burst communications for monitoring vessel position, in particular the Prince William Sound VMS near Valdez, Alaska. This document describes the equipment and operational performance of meteor burst in the telemetry of vessel position data.

17. Key Words Meteor Burst Communications Meteor Scatter Ship Tracking	18. Distribution Statement DOCUMENT IS AVAILABLE TO THE PUBLIC THROUGH THE NATIONAL TECHNICAL INFORMATION SERVICE, SPRINGFIELD, VIRGINIA 22161

19. Security Classif. (of this report)	20. Security Classif. (of this page)	21. No. of Pages	22. Price
Unclassified	Unclassified	76	

Form DOT F 1700.7 (8-72) Reproduction of completed page authorized

82 12 28 028

PREFACE

The Prince William Sound Vessel Traffic Service (VTS) was established in 1977 to prevent loss of life and loss of property and to protect both the navigable waters surrounding Valdez and their resources from environmental damage. At the present time, vessels report their arrival at various check-points via VHF-FM radio. As the Valdez port area is developed, the number of ships being monitored is expected to increase markedly. To accommodate this growth, a system of automatic vessel position reporting utilizing a meteor-burst communication channel has been proposed. This study details the cost and performance of such a system and presents a plan for a feasibility test.

Accession For
NTIS
A

METRIC CONVERSION FACTORS

Approximate Conversions to Metric Measures

Symbol	When You Know	Multiply by	To Find	Symbol
		LENGTH		
in	inches	2.5	centimeters	cm
ft	feet	30	centimeters	cm
yd	yards	0.9	meters	m
mi	miles	1.6	kilometers	km
		AREA		
in^2	square inches	6.5	square centimeters	cm^2
ft^2	square feet	0.09	square meters	m^2
yd^2	square yards	0.8	square meters	m^2
mi^2	square miles	2.6	square kilometers	km^2
	acres	0.4	hectares	ha
		MASS (weight)		
oz	ounces	28	grams	g
lb	pounds	0.45	kilograms	kg
	short tons (2000 lb)	0.9	tonnes	t
		VOLUME		
tsp	teaspoons	5	milliliters	ml
Tbsp	tablespoons	15	milliliters	ml
fl oz	fluid ounces	30	milliliters	ml
c	cups	0.24	liters	l
pt	pints	0.47	liters	l
qt	quarts	0.95	liters	l
gal	gallons	3.8	liters	l
ft^3	cubic feet	0.03	cubic meters	m^3
yd^3	cubic yards	0.76	cubic meters	m^3
		TEMPERATURE (exact)		
°F	Fahrenheit temperature	5/9 (after subtracting 32)	Celsius temperature	°C

Approximate Conversions from Metric Measures

Symbol	When You Know	Multiply by	To Find	Symbol
		LENGTH		
mm	millimeters	0.04	inches	in
cm	centimeters	0.4	inches	in
m	meters	3.3	feet	ft
m	meters	1.1	yards	yd
km	kilometers	0.6	miles	mi
		AREA		
cm^2	square centimeters	0.16	square inches	in^2
m^2	square meters	1.2	square yards	yd^2
km^2	square kilometers	0.4	square miles	mi^2
ha	hectares (10,000 m^2)	2.5	acres	
		MASS (weight)		
g	grams	0.035	ounces	oz
kg	kilograms	2.2	pounds	lb
t	tonnes (1000 kg)	1.1	short tons	
		VOLUME		
ml	milliliters	0.03	fluid ounces	fl oz
l	liters	2.1	pints	pt
l	liters	1.06	quarts	qt
l	liters	0.26	gallons	gal
m^3	cubic meters	35	cubic feet	ft^3
m^3	cubic meters	1.3	cubic yards	yd^3
		TEMPERATURE (exact)		
°C	Celsius temperature	9/5 (then add 32)	Fahrenheit temperature	°F

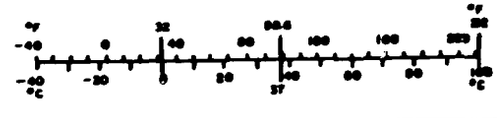

TABLE OF CONTENTS

Section		Page
1.	PROGRAM SUMMARY	1
	1.1 REQUIREMENTS	2
	1.2 FUNCTIONAL DESCRIPTION AND PERFORMANCE ESTIMATES	2
	1.3 SYSTEM SPECIFICATIONS AND COST ESTIMATES	3
	1.4 FEASIBILITY TEST PLAN	5
2.	OPERATIONAL SYSTEM REQUIREMENTS	7
	2.1 EQUIPMENT REQUIREMENTS	7
	2.2 OPERATING FREQUENCIES	7
	2.3 REMOTE CONTROLLED MASTER	7
	2.4 COSTS	9
	2.5 MAINTENANCE	9
APPENDIX A.	VESSEL TRAFFIC COMMUNICATION SYSTEM REQUIREMENTS	
	1. INTRODUCTION	A-1
	2. BACKGROUND	A-1
	3. PROJECT OBJECTIVE	A-2
	4. CONCEPT FOR IMPROVED VESSEL MONITORING	A-2
	5. COMMUNICATIONS SYSTEM REQUIREMENTS	A-3
APPENDIX B.	FUNCTIONAL DESCRIPTION AND PERFORMANCE ESTIMATES	
	1. TASK DESCRIPTION	B-1
	2. METEOR BURST COMMUNICATIONS BACKGROUND	B-1
	3. ALASKAN METEOR BURST COMMUNICATION SYSTEM	B-14
	4. PRINCE WILLIAM SOUND METEOR BURST SYSTEM	B-22
	5. PERFORMANCE	B-25
APPENDIX C.	SYSTEM SPECIFICATIONS AND COST ESTIMATES	
	1. SYSTEM CONSIDERATIONS	C-1
	2. SHIPBOARD TERMINAL SPECIFICATIONS	C-1
	3. COST ESTIMATES	C-1
APPENDIX D.	SHIPBOARD TERMINAL SPECIFICATION	
	1. DESCRIPTION	D-1
	2. OPERATIONS REQUIREMENTS	D-3
	3. EQUIPMENT SPECIFICATIONS	D-6

TABLE OF CONTENTS (CONT.)

Section	Page
APPENDIX E. FEASIBILITY TEST PLAN	
1. TASK DESCRIPTION	E-1
2. TEST GEOMETRY	E-1
3. TEST PROCEDURE	E-2
4. EQUIPMENT	E-2
5. INSTALLATIONS	E-6
6. ESTIMATED COSTS	E-6
APPENDIX F.	
REPORT OF NEW TECHNOLOGY	F-1

LIST OF ILLUSTRATIONS

Figure		Page
1-1.	METEOR BURST SHIPBOARD TERMINAL	4
1-2.	TEST AREA	6
2-1.	METEOR BURST MASTER STATION	8
B-1.	METEOR BURST COMMUNICATION SYSTEM	B-2
B-2.	CAUSE OF DIURNAL VARIATION	B-10
B-3.	VESSEL MONITORING	B-15
B-4.	ALASKA METEOR BURST COMMUNICATION SYSTEM (AREA OF COVERAGE)	B-17
B-5.	ALASKAN METEOR BURST COMMUNICATION SYSTEM (MASTER STATION)	B-19
B-6.	ALASKAN METEOR BURST COMMUNICATION SYSTEM (REMOTE TERMINALS)	B-21
B-7.	METEOR BURST SHIPBOARD TERMINAL	B-23
B-8.	AMBS COVERAGE (MASTER STATION AT JOHNSON POINT)	B-24
D-1.	SHIPBOARD TERMINAL FUNCTIONAL DIAGRAM	D-2
D-2.	METEOR BURST TRANSCEIVER	D-8
E-1.	ALASKAN METEOR BURST COMMUNICATION SYSTEM (MASTER STATION)	E-4
E-2.	METEOR BURST SHIPBOARD TERMINAL	E-5

LIST OF TABLES

Table		Page
B-1.	ESTIMATES OF PROPERTIES OF SPORADIC METEORS	B-8
B-2.	METEOR BURST PERFORMANCE CONSTRAINTS	B-13
B-3.	AMBCS GENERAL SPECIFICATIONS	B-18
C-1.	SYSTEM CONSIDERATIONS/REQUIREMENTS	C-2
D-1.	SHIPBOARD TERMINAL SPECIFICATIONS (TRANSMITTER/RECEIVER)	D-9
E-1.	FEASIBILITY TEST COST BREAKDOWN	E-7
E-2.	COST SUMMARY	E-8

EXECUTIVE SUMMARY

1 REQUIREMENT

The Prince William Sound area leading into Port Valdez is expected to have a rapid escalation in vessel traffic in the next ten years. This report is an investigation of using meteor burst communications to perform the interrogation of ships in the Vessel Traffic Service area where they will transpond with their position, thus establishing tracks of interested shipping. Both the Alaskan Meteor Burst Communication System (AMBCS) and a system at or near Valdez will be evaluated.

2 PERFORMANCE ESTIMATE

Performance is defined as the time it takes to receive a data track from a ship with a specified reliability. For a 0.9 reliability, the average waiting time is 4.1 minutes, with a worst case of 12.1 minutes. The worst case time occurs from January to April from 1600 to 2000 in the evenings.

The spacial diversity characteristic of meteor burst communications provides automatic time multiplexing of responses from the ships. Thus, the expected traffic level can readily be serviced.

3 SHIPBOARD TERMINAL

The shipboard terminal will consist of a Meteor Burst Transceiver, Loran C receiver and their antennas. The cost

of this terminal, in initial orders, is expected to be in the $6,000.00 range. More extensive use of such terminals should significantly reduce this figure. Installation will not be any more complex than installing conventional two way radio systems.

4 CONTROL STATION

Locating the control or master station at Valdez will restrict the range of operation to approximately 500 miles toward the south, and less toward the north. Location at other sites in the Prince William Sound area that would improve operational range were investigated (Potato Point and Johnson Island), however they are considered unsatisfactory due to the requirement of other communication means to send the data to the VTC in Valdez.

Locating the master station at Kodiak could provide coverage for over 1000 miles in all directions. Tracking performance would increase because of the increased operating range to Prince William Sound. The system could also be used for communications to all Coast Guard assets in the Alaskan area which includes the Bering Sea, the Arctic Ocean, Aleutian Islands and all of Southeast Alaska.

5 FEASIBILITY TEST

The performance of a feasibility test was investigated using either the AMBCS or a government owned mobile meteor burst system. The mobile system is potentially available for demonstration testing. The costs for modification and installation are estimated to be $50,000 using the AMBCS and $30,000 using the mobile system. The reasons for the cost difference are

1) modification and checkout of the AMBCS would have to be performed at Anchorage,

2) an additional master station receiver would be required at the AMBCS, and
3) a phone line from Anchorage to Valdez would have to be leased.

The use of the mobile system is recommended because of the reduced cost and having dedicated equipment. Operation on the AMBCS is required to be on a non-interference basis with the current owners.

Committment for use of the government mobile system should be made by June 30, 1981 to ensure its availability. Clearance for use of the mobile system's operating frequencies should also be obtained from the Alaska Federal Government frequency coordinator. Frequency authorization is not considered a problem as they have previously been cleared for the Anchorage area.

1. PROGRAM SUMMARY

Vessel monitoring or tracking by current methods is not practical as the range requirement is extended to over-the-horizon. The Prince William Sound Vessel Monitoring System is a good example of a longer than normal range requirement. The expected increase in vessel traffic in the next few years makes the requirement increasingly important. In Alaska, five federal agencies operate a meteor burst communication system for over-the-horizon communications and remote data acquisition which has proven satisfactory. This investigation examines the feasibility of using the meteor burst communication technology for the telemetry of ship's positional data to the Vessel Traffic Control facility at Valdez.

The meteor burst communications technique is to scatter radio signals off of ionized meteor trails. Sufficient meteor activity exists to ensure communication between two points often enough for practical ship tracking. The trails occur at an altitude of 60 miles which permits an operating range of 1200 miles.

1.1 REQUIREMENTS

The basic requirements for vessel tracking in the Prince William Sound are:

1) Up to 18 vessels are to be monitored at any given time.

2) A track update is required every six (6) minutes.

3) Each vessel transponds with LORAN C time difference signals (T_D). Time difference signals are preferable over Lat-Lon data because the method of computation varies between manufacturers of LORAN equipment.

4) Each vessel on its first "check-in" responds with its name and identification. All subsequent position reports include just the ship's ID and position.

Detailed requirements are given in Appendix A.

1.2 FUNCTIONAL DESCRIPTION AND PERFORMANCE ESTIMATES

A meteor burst system has two types of terminals; (1) a master or interrogating station and (2) a remote or transponding station. The remote station will be the shipboard terminal. For this investigation, the master station will either be the existing Alaskan Meteor Burst Communication System or a separate one located at the VTC in Valdez. Figure 2-1 is a diagram showing the major elements of the system.

The use of either master station will result in burst times on the average of 30 milliseconds, therefore the

system must obtain a ship's response and acknowledge the reception within this time. Performance at .9 reliability is estimated to be:

Average:	4.1 minutes
Best Case:	1.4 minutes
Worst Case:	12.1 minutes.

The worst case will occur during early evening for 2-3 hours for four months of the year, January through April.

A detailed description of the meteor burst communication technology, the AMBCS and a potential Coast Guard operated system and the performance analysis is given in Appendix B.

1.3 SYSTEM SPECIFICATIONS AND COST ESTIMATES

The shipboard terminal is composed of a LORAN receiver, a meteor burst transceiver, an antenna for each, power supply and an optional teleprinter. Figure 3-1 is a diagram showing the major elements and their connectivity. The interface between the LORAN receiver and the meteor burst transceiver is the standard EIA-RS232C in most cases. However, some LORAN receivers use their own unique parallel digital interfaces. These can be handled with relative ease within the meteor burst transceiver.

The cost of a shipboard terminal, exclusive of the teleprinter, is estimated at $5,700.00 to $6,200.00 in quantities of 50 to 100. Installation on most ships should not be difficult and should be accomplished within a day's time by a qualified radio technician.

Detailed specifications of a shipboard terminal are given in Appendix C with a cost breakdown.

A further cost breakdown of the shipboard terminal is given in Appendix C and the detailed specifications for the terminal are provided in Appendix D (Technical Memorandum II).

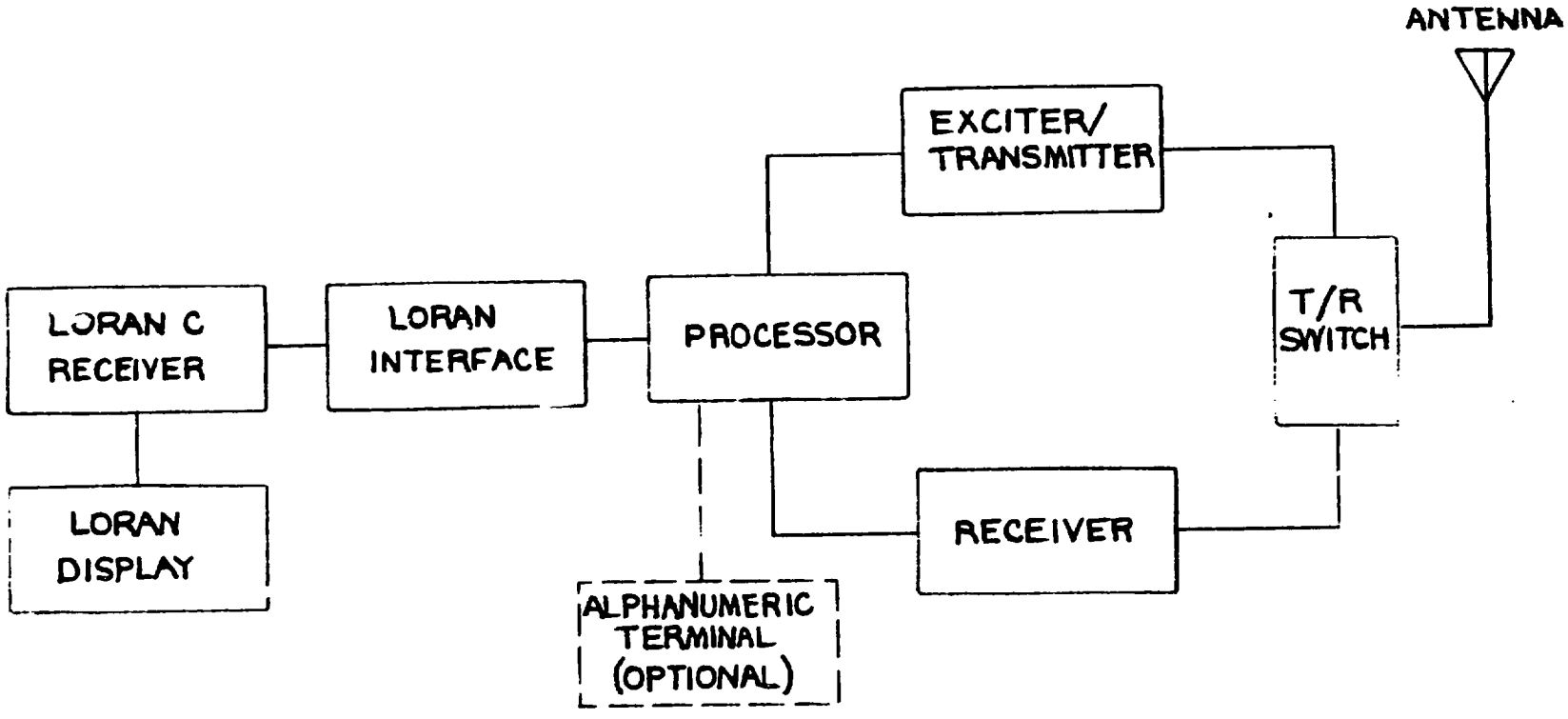

FIGURE 1-1: METEOR BURST SHIPBOARD TERMINAL

1.4 FEASIBILITY TEST PLAN

A test to demonstrate the feasibility of using meteor burst communications can be accomplished by either operation within the existing Alaskan Meteor Burst Communication System (AMBCS) or by using a Government owned mobile system. Both systems would require minor modifications to the equipment and control software.

A recommended test would be to install one shipboard terminal aboard a tanker that periodically enters and leaves Prince William Sound and a second terminal aboard a Coast Guard vessel. The terminal on the Coast Guard vessel would traverse the areas of desired coverage to ensure proper operation throughout the area.

Figure 4-1 shows the area of interest, which is the Prince William Sound shipping lanes, potential tanker moorage areas in the sound and out into the Gulf of Alaska for 60 NM. The 60 NM represents approximately the three hour call in point prior to arriving at the Hinchinbrook Entrance to Prince William Sound.

Using the AMBCS, the cost to make the modifications and installations would be approximately $50,000.00. Using the GFE mobile meteor burst system, the costs would be approximately $30,000.00. An additional cost of leasing a phone line if the AMBCS is used is estimated at $1,000.00 per month. This assumes the Coast Guard personnel would conduct the test and prepare the report. A contractor prepared report is estimated at an additional $10,000.00 to $15,000.00.

Appendix E discusses the test plan with a breakdown of the costs.

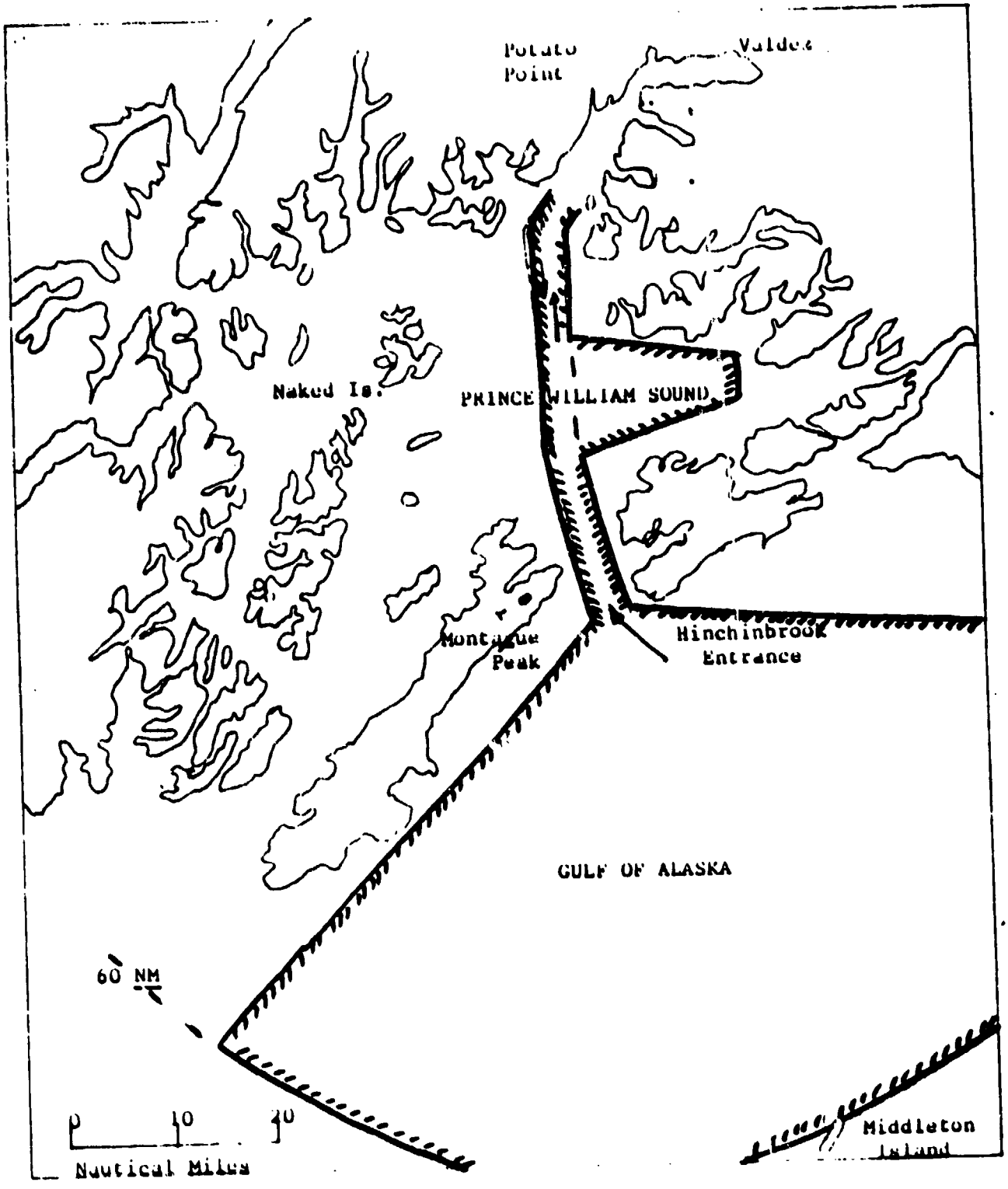

FIGURE 1-2: TEST AREA

2. OPERATIONAL SYSTEM REQUIREMENTS

Locating a meteor burst master station at the Vessel Tracking Center in Valdez would require a site survey to examine compatibility. The main concern is the man made noise which the antennas could pick up to interfere with low level meteor burst signals. If the VTC is satisfactory, the installation would be relatively simple. If the VTC building was not satisfactory, the remoting of the master station within 10 miles is highly probable.

2.1 Equipment Requirements

The electronics required would easily fit within a five foot high standard rack. Duplex filters would require the space of a second rack. The output terminal could be a teleprinter, CRT terminal or both. Figure 5-1 shows a diagram of the components that make up a meteor burst master station.

The antenna required is a single five or six element Yagi that, when assembled, occupies a 12 x 14 foot space and would weigh less than 50 pounds. The antenna tower height requirement is less than 30 feet. If located at the VTC, a building roof mount would be a simple pipe properly mounted to the side of the building roof.

2.2 Operating Frequencies

Two operating frequencies are required in the 40-50 MHz range separated from 1.5 to 3 MHz.

2.3 Remote Controlled Master

An unmanned master, within ten miles of the VTC, if the VTC site proves unsuitable, would not overly complicate the station. The link back to the VTC could be an

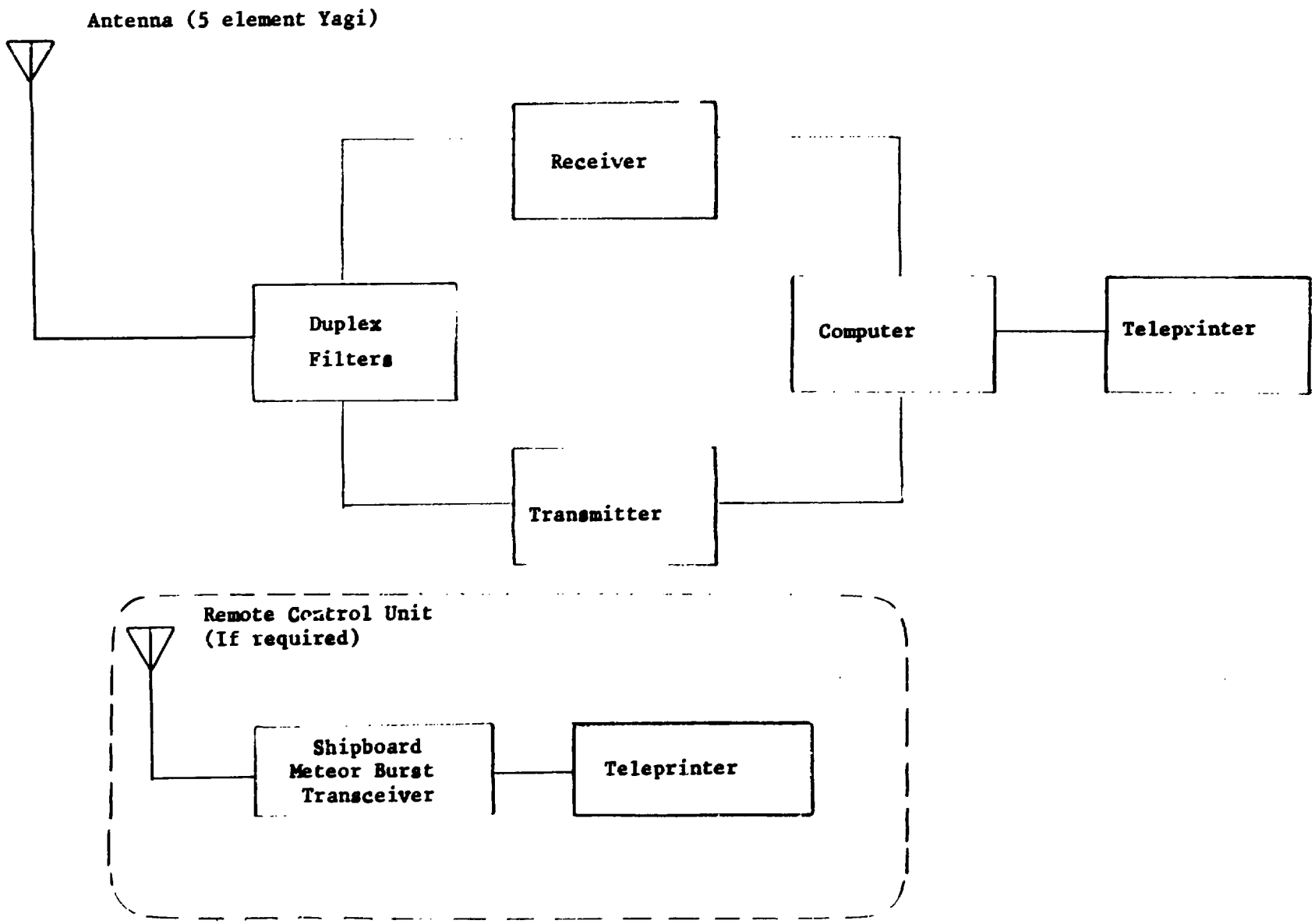

FIGURE 2-1: METEOR BURST MASTER STATION

RF link using the same frequencies as the meteor burst system does. The ship's positional data, when received at the master station, could be transmitted immediately, or at 6 minute intervals, to the remote control unit at the VTC. Master Station control functions could be initiated at the VTC remote control unit. Thus the remoted master station could be unmanned; the Department of Agriculture's SNOTEL system and the AMBCS both operate unmanned.

2.4 Costs

The costs for the master station equipment, software, site surveys and installation are as follows:

Equipment	$ 65,000.00
Software (Assumes Lat-Lon conversion algorithms are defined)	$ 10,000.00
Site Surveys, Installation and training (on site)	$ 17,000.00
Remote Control Unit	$ 7,000.00

2.5 Maintenance

The equipment can be maintained by a radio and/or a computer technician. Available master station systems have automated checkout features that enable the technician to identify faults in the various units by teleprinter printout.

APPENDIX A
VESSEL TRAFFIC COMMUNICATION SYSTEM REQUIREMENTS
FOR VALDEZ, ALASKA

1. INTRODUCTION

The Prince William Sound Vessel Traffic Service (VTS) in Valdez, AK has been in operation since 25 July 1977. Mandated under the Trans-Alaskan Pipeline Authorization Act (P.L. 93-153) of 1973, the Valdez, AK, VTS was established to prevent loss of life and loss of property and to protect both the navigable waters surrounding Valdez and their resources from environmental damage. The VTS service area includes the waters of Port Valdez, Valdez Narrows, Valdez Arm and Prince William Sound. Figure 1 shows the service area.

The VTS operations center is located in the Coast Guard Marine Safety Office in the town of Valdez, AK. Called a Vessel Traffic Center (VTC), this facility is operated on a 24-hour-a-day, 7-day-a-week basis. From the VTC, all vessel traffic moving in both Prince William Sound and in the Valdez area is continually monitored, and advisories are issued to promote safe traffic movement. The amount of attention paid to any given vessel is a function of the vessel's size, its use and its location in the service area. Oil tankers, calling at the Alyeska Marine Terminal in Valdez, are monitored most closely.

2. BACKGROUND

2.1 VTS OPERATIONS

Participation in the VTS and its monitoring scheme is made mandatory by regulation. Most vessels operating in the service area are required to report their arrival at various checkpoints over VHF-FM radio. However, oil tankers are more closely monitored as they transit in and out of Port Valdez. Tankers are required to make preliminary reports of their arrival both twenty-four hours and three hours prior to arriving at Hinchinbrook Entrance. In addition, they are required to call the VTC at least thirty minutes prior to either entering into or getting underway in the VTS service area.

When underway in the service area, tankers are monitored by two means: (a) radar and (b) a Vessel Movement Reporting System (VMRS). Radar coverage is available from Naked Island into Port Valdez (see Figure 1-2). While a tanker is under radar surveillance, personnel at the VTS plot its position every six minutes. The VMRS is used to monitor each tanker's transit from Naked Island to Hinchinbrook Entrance. Under the VMRS scheme, a tanker reports its position via VHF-FM radio when it arrives at either of two checkpoints: (a) abeam of Naked Island and (b) abeam of Schooner Rock at Hinchinbrook Entrance. In traveling between these two checkpoints, the tanker is required, by regulations, to follow the lanes of a Traffic Separation Scheme (TSS). The TSS lanes are shown in Figure 1-2.

2.2 TRAFFIC VOLUME

Currently, an average of two tankers per day call at Valdez. Each tanker makes two transits of the route from Valdez to Hinchinbrook Entrance, for a total of four

transits. There are presently approximately fifty vessels that are involved in this particular trade.

In addition, the Valdez port area is being expanded to include an oil refinery and a container port. Further, the volume of tanker traffic will increase, because the Alyeska Terminal is capable of accomodating four oil tankers simultaneously. Also, an anchorage has been established in Prince William Sound in the vicinity of Knowles Head. These developments will markedly increase the number of ships that would have to be monitored. A worst-case estimate is that there could be eighteen ships in Prince William Sound, not under surveillance, that would have to be monitored by some means.

3. PROJECT OBJECTIVE

The basic objective is to provide increased position monitoring capability during a vessel's transit through the current VMRS monitoring area in Prince William Sound. It is felt that this objective can be met by periodically telemetering each vessel's position to the VTC as it proceeds along the TSS lanes. Since oil tankers are required, by regulations, to carry Loran-C receivers, it is anticipated that, in the near term, the increased monitoring can be accomplished by transmitting the Loran-C time difference readings to the VTC for processing and display. In addition to monitoring tankers as they transit the VMRS surveillance area, it is desirable to have similar monitoring extending seaward to the area of the three hour pre-arrival report.

In the future, when container carriers and petroleum refinery product carriers begin calling at Valdez, they may also come under the monitoring scheme. At present, there is no requirement that these types of vessels carry Loran-C receivers; however, by 1982 they will be required to carry some device that will provide a continously updated position readout, probably in terms of latitude and longitude. These types of navigation equipment could be used to telemeter position information in the same manner as the Loran-C receivers.

4. CONCEPT FOR IMPROVED VESSEL MONITORING

The geographical area in which improved vessel monitoring is required includes the portion of Prince William Sound from Naked Island to Hinchinbrook Entrance and the portion of the Gulf of Alaska within a sixty mile radius of Hinchinbrook Entrance. The concept of operation is that as a vessel transits this area, it transmits its current position and an identification number to the VTC for processing and display. A time annotation is appended to this report immediately upon receipt. The period between successive reports will be: (a) not longer than six minutes apart when the vessel is in Prince William Sound and (b) not longer than fifteen minutes apart when the vessel is in the Gulf of Alaska.

The system check-in/check-out procedure will start and end the proposed monitoring sequence. Upon either arriving at the check-in area three hours from Hinchinbrook Entrance or prior to getting underway to depart from Valdez, a vessel will enter the system by transmitting its name and identification number to the VTC. After successful receipt of the check-in message has been assured, it will begin transmitting its ID number and current position readout from the Loran-C receiver. When a ship either moors at Valdez or departs the three hour check-in area, the ship will simply stop transmitting the monitor data.

5. COMMUNICATIONS SYSTEM REQUIREMENTS

This effort will investigate the feasibility of using meteor burst communications to support the VTS position monitoring requirement. It will also provide a preliminary design and cost breakdown for using an exisiting meteor burst system to test the application concept. The meteor burst system requirements will be divided into three parts:

a. VTC Operations
b. Shipboard Operations
c. Communication Procedure

5.1 VTC OPERATIONS

The VTC watchstander requires a hard copy printout of the messages he receives. He also needs to have some flexibility in controlling the time interval between the receipt of position messages. Therefore, the following features are deemed necessary:

(a) The meteor burst communication system will collect as many position reports from each vessel as possible. The minimum requirement is that one report be received at the VTC, either every six minutes from vessels operating in Prince William Sound, or every fifteen minutes from vessels operating in the Gulf of Alaska.

(b) All messages will be time annotated automatically by the meteor burst communication system immediately upon receipt. These messages will be stored, however, only the messages arriving in the expected time period of a report will be forwarded to the VTC. For example, if messages are expected six minutes apart, all messages will be received and stored; but, only those messages arriving at the expected six minute interval will be forwarded to the VTC.

(c) Messages forwarded to the VTC from the meteor burst system will be transmitted immediatley upon receipt. They will be printed out in the following format:

ID NUMBER - SHIP NAME - POSITION - TIME

(d) The VTC watchstander will be able to change the period between reports for any ship, in one minute increments. The desired range of reporting periods is three to fifteen minutes.

(e) The VTC watchstander will be able to obtain a complete printout of all the messages received from one ship upon request.

(f) The VTC watchstander will be able to delete the complete file of ship's messages upon request.

(g) The VTC watchstander will be able to set the time of receipt clock which annotates the time of receipt of telemetry messages.

5.2 SHIPBOARD OPERATIONS

The shipboard equipment will operate automatically. The meteor burst communications device will be connected to a Loran-C receiver. Each time the Loran-C receiver display is updated, the same information will be input to the communications device. In addition to the Loran-C data, the shipboard equipment will store the ship's name and identification number. Assuming that the Loran-C receiver is turned on and operating properly, the shipboard operator need only turn on the meteor burst communications device to place the shipboard system in operation. The following features are required:

(a) The capability to transmit two types of messages:

(1) The initial entry message which consists of a twenty five character alphanumeric ship name block and a five character numeric ship identification number block.

(2) The position report message which consists of a five character numeric ship identification number block and a fourteen character alphanumeric postion information block.

(b) An indicator that shows the shipboard operator that his equipment is operating properly.

(c) An indicator that shows the shipboard operator that communications are being carried out in the expected manner.

5.3 COMMUNICATIONS PROCEDURES

Communications between the VTC and each vessel will be automatic. A shipboard operator will be able to energize his equipment and have communications established without further effort on his part. When a vessel is outside of the monitoring area, communications will be terminated by the shipboard operator switching off his equipment. Information from each ship will be relayed to the VTC in the following manner:

(a) When each vessel sends its initial entry messages, the messages will be time annotated and immediately printed out at the VTC.

(b) When each vessel sends the first position report message after the entry message, the message will be time annotated and immediately printed out at the VTC.

(c) All messages received will be immediately time annotated and stored. Storage will be in a manner that allows retrieval by calling out either a ship's name or its identification number.

(d) Timing of the message print out at the VTC will begin with the print out of the first position report message.

APPENDIX B

TECHNICAL MEMORANDUM

FUNCTIONAL DESCRIPTION AND PERFORMANCE ESTIMATES

1. TASK DESCRIPTION

1.1 Scope

This Technical Memorandum (T.M.) is the first under Contract DTRS-58-80-C-00171, "Feasibility of Utilizing Meteor Burst communications in a Vessel Monitoring System" and covers Task I as identified in the contract. The specific application is vessel position monitoring for the Prince William Sound Vessel Traffic Service, Valdez, Alaska. This T.M. will discuss the functional description of the meteor burst system required for the specific application and its performance per the system requirements of the contract (Appendix A).

Two potential meteor burst systems will be analyzed, (1) the existing Alaskan Meteor Burst Communication System (AMBCS) and (2) a potential Coast Guard owned and operated system with its Master Station located in the Prince William Sound area.

2. METEOR BURST COMMUNICATIONS BACKGROUND

2.1 Introduction

A meteor burst communication system (MBCS) utilizes ionized meteor trails as a means of radio signal propagation. These trails exist in the 80 to 120 Km altitude region of the earth's atmosphere and reflect, or actually re-radiate, the RF energy between two stations. The height of the trails allows over-the-horizon communication at distances up to 1200 miles (see Figure 1). However, because

the ionized trails exist for only short periods of time, (usually for a few milliseconds to a few seconds), communication linkage is intermittant and high speed digital pulse transmission techniques must be used to transfer the information. Billions of ionized meteor trails are produced daily in the earth's atmosphere, providing many potential reliable message exchanges per hour.

At the present time there are several methods of data communication over long ranges. These methods include HF ionospheric scatter links, VHF repeater links, microwave links, telephone lines, and satellites.

HF scatter systems are plagued by ionospheric losses which are frequency dependent. This requires that the operating frequency be variable in order to minimize these losses. Another problem with HF systems is that they suffer from large amounts of fading which can be due to several ionospheric phenomena; e.g., movements of the ionosphere causing interference fading, rotation of the axis of the polarization ellipsis, time variations in ionospheric absorption, focusing, and skipping of the signal due to maximum usable frequency (MUF) failure. Periods of this fading are highly irregular and can vary from a fraction of a second to a few hours depending upon the cause. Fading and ionospheric losses can render an HF system useless for long periods of time.

Microwave and VHF links are line-of-site, thus requiring the use of repeaters if over the horizon ranges are to be covered. This presents an installation and maintenance problem especially in remote, mountainous areas. Initial cost of the system is also high. Microwave systems are also geographically fixed, thus preventing system changes or expansion without extra cost.

Telephone lines suffer from all the same problems as microwave links with respect to installation, maintenance and flexibility.

PRECEDING PAGE BLANK-NOT FILMED

Synchronous communication satellites offer the only means of exceeding the long range data communications properties of a MBCS. Synchronous satellites are those which maintain a fixed position in the sky relative to the earth. These satellites are more costly and complex than a typical orbiting satellite which is not effective for continous communication systems. The obvious high costs associated with synchronous satellites eliminate their use for many applications.

Meteor burst communications technology is ideally suited for both data acquisition applications and message communication networks. A typical meteor burst data acquisition system consists of a base station transceiver with a central processor and a number of remote stations designed for either data collection or supervisory control. This type of system can be applied to hydrological, meteorological and oceanographic data sensing. A message communication system can consist of identical terminals, each with a transceiver and central processor. Also, when a meteor burst transponder is interfaced to a navigational system such as Loran C, vehicle following or tracking can be accomplished.

2.2 History of Meteor Burst Communications

Communication by forward scatter from ionized meteor trails has had a resurgence of interest in recent years. The theoretical foundation for meteor burst communication systems (MBCS) was laid in the 1950's when extensive analysis and field measurements established the basic parameters of meteor trail ionization and communication potential. Several significant demonstrations, Canadian JANET, Navy Ship to Shore SIGMA, and the SHAPE COMET Systems were developed and demonstrated in the 1950's and 60's, establishing credibility of the theory. The satellite technology was developed in the late 1960's, temporarily phasing out meteor scatter

in favor of the satellite's higher performance in long range, wide bandwidth operations.

In the 1970's, with the advances in solid state and processor technology, meteor burst equipment became economically feasible for many low data rate applications. Systems that were developed and are currently in operation are:

1) Department of Agriculture's SNOTEL system,
2) Alaska Meteor Burst Communications System (AMBCS),
3) Military vehicle following/short message system.

The SNOTEL system meteor burst network is for telemetry of snow pack data from sites through the 11 Western States. Over 400 data sites are installed, with the master or interrogating stations located at Boise, Idaho and Ogden, Utah.

The AMBCS has a master or interrogating station at Anchorage, with data sites through the state of Alaska. Five Federal Agencies (Corps of Engineers, BLM, Dept. of Agriculture, USGS, and National Weather Service) jointly own and operate the system. The AMBCS uses the same type production equipment as the SNOTEL system. An alphanumeric message capability is also integrated into this system.

The military flight following/short message traffic system was designed for mobile applications. The master station is installed in a small van to be transported to any desired location and quickly set up for operation. The remote terminal was designed to interface with a navigational unit (LORAN C) and provide automated flight tracking in conjunction with a short message capability.

The development and operation of the above major systems has proven the applicability of meteor burst communications

for data acquisition and short message applications. The earlier COMET and SIGMA programs were full duplex message systems, which demonstrated the ability to transfer long messages. Another test, sponsored by DCA MEECN (Minimum Essential Emergency Communication Network) System Office, demonstrated the applicability of meteor burst for the MEECN short message requirements. A MEECN ground to ground test was conducted in 1976, and an air to ground test was conducted in early 1980.

2.3 Meteor Burst Communications Fundamentals

A meteor burst communication system (MBCS) utilizes, as a means of radio signal propagation, scattering from ionized meteor trails that exist in the 80 to 120 Km region of the earth's atmosphere. These trails reflect, or reradiate the RF energy (usually in the low VHF range from 40 to 100 MHz) from a transmitting source to a recovery or transponding terminal. The height of the trails allows over-the-horizon communication at distances up to 1200 miles (see Figure B-1). However, because the ionized trails exist for only short periods of time (usually from a few milliseconds to a few seconds), communication is intermittent and high speed digital pulse transmission techniques must be used to convey the information. The system is particularly suited to long range, low rate data acquisition applications but it can also support teletype links. Shorter operational ranges, over mountainous terrain, are also possible due to the height of the reflective meteor trail.

2.3.1 Meteor Trail Ionization Billions of ionized meteor trails are produced daily in the earth's atmosphere at heights of 80 to 120 Km. These trails diffuse rapidly and usually disappear within a few seconds. However, during their brief existence, they will reflect radio waves in the VHF frequency range.

The meteor, as it enters the upper atmosphere traveling at speeds of 10 to 75 Km/second, possesses a large amount of kinetic energy. As it begins colliding with air molecules, much of this kinetic energy is converted into heat which effectively vaporizes atoms from the surface of the parent meteor. These vaporized atoms, which are traveling at about the same speed as the meteor, are further restricted by air molecules as they progress further into the atmosphere. This results in the transformation of kinetic energy into the energy of ionization which effectively strips electrons from the atoms leaving a trail of positive charged ions and free electrons. It is the electrons that reflect or re-radiate radio waves.

This ionization is distributed in the form of a long, thin paraboloid with the particle at the head. The electron line density (electrons/meter) is proportional to the mass of the meteor, and ranges from 10^{18} electrons/meter to about 10^{10} electrons/meter. Typical trails are 25 Km long and have an initial trail radius of about 1 meter.

2.3.2 Physical Properties of Meteors Meteors are defined as extraterrestrial objects that travel in orbits (elliptical) around the sun, and at some point in these orbits enter the earth's atmosphere. These objects can be divided into two basic classes:

Shower Meteors - These are groups of particles all moving with the same velocity in fairly well-defined orbits around the sun. To an observer on earth, they are the most spectacular and appear to radiate from a common point in the sky (called the radiant). Shower meteors account for only a small fraction of the total incidence of meteors.

Sporadic Meteors - These are particles that move in random orbits around the sun and account for the vast majority of meteors that are used in radio work.

TABLE B-1. ESTIMATE OF PROPERTIES OF SPORADIC METEORS

Notes		Mass (Grams)	Radius (cm)	Number Swept Up By Earth Per Day	Electron Line Density Elect./Meter
Particles That Survive Passage Through Atmosphere		10^4	8	10	--
Particles Totally Disintegrated In Upper Atmosphere	Overdense Visual	10^3	4	10^2	--
		10^2	2	10^3	--
		10	.8	10^4	10^{18}
		1	.4	10^5	10^{17}
		10^{-1}	.2	10^6	10^{16}
		10^{-2}	.08	10^7	10^{15}
	Underdense Non-Visual	10^{-3}	.04	10^8	10^{14}
		10^{-4}	.02	10^9	10^{13}
		10^{-5}	.008	10^{10}	10^{12}
		10^{-6}	.004	10^{11}	10^{11}
		10^{-7}	.002	10^{12}	10^{10}
Particles That Can't Be Detected By Radio Means		10^{-8} to 10^{-13}	.004 to .0002	Total About 10^{20}	Practically None

Their radiants and times of occurance are random and cannot be catalogued as shower meteors can; however, it is known that they are not uniformly distributed in the sky but are mostly confined to within about 20° of the elliptic plane (the plane of the earth's orbit about the sun). Also, the intersection of the meteor orbits with the earth's orbit are not uniformly distributed but are concentrated so as to produce a maximum of intersections in August and a minimum in February, with about 3:1 variation. The rate of incidence of sporadic meteors is further dependent upon the time of day with the morning hours being more active. On the morning side of the earth, meteors are swept up by the forward motion of the earth in its orbit around the sun. On the evening side, the only meteors reaching the earth are those which overtake it. A daily variation of about 4:1 can be expected. The reason for this variation is illustrated in Figure 2.

Another interesting and useful fact about sporadic meteors is their mass distribution. This distribution is such that there are approximately equal total masses of each size of particle (i.e., there are 10 times as many particles of mass 10^{-3} grams as there are particles of mass 10^{-2} grams). Table 1 lists the approximate relationship between mass, size, electron line density, and number.

2.3.3 <u>Characteristics of Reflected Signals</u> Radio signals received on a meteor-burst link are basically of two forms, the most prevalent of which is the underdense trail reflection. In this case, the reflecting meteor is characterized by a relatively low electron line denisty ($q \leq 10^{14}$ electrons/meter). An underdense trail does not actually reflect energy; instead, the radio wave passes through the trail, exciting individual electrons as it does. These excited electrons act as small dipoles re-radiating the signal at an angle equal but opposite to the incident angle of the trail and radio signal. Signals from underdense trails rise to an initial peak value in a

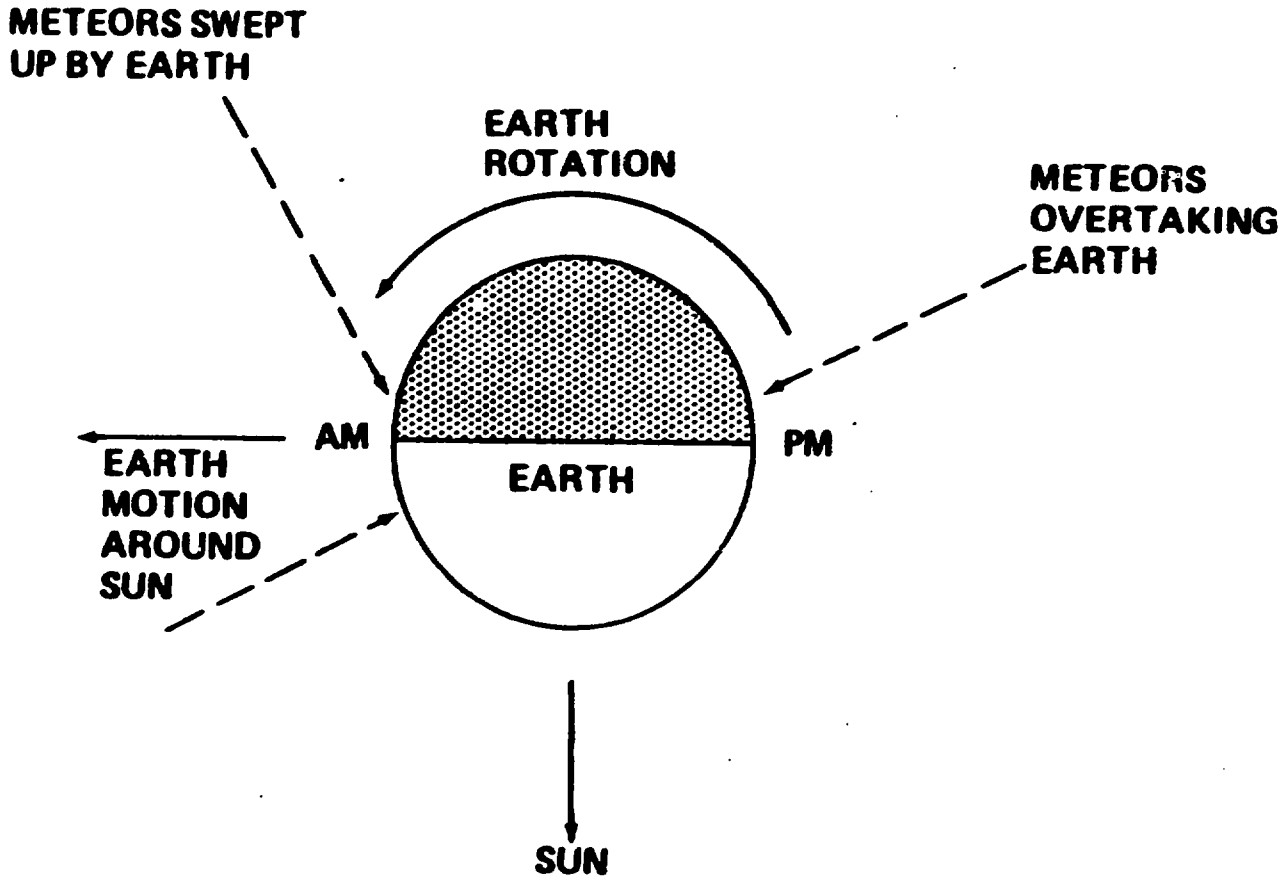

FIGURE B-2: CAUSE OF DIURNAL VARIATION

few hundred microseconds and have typical durations as long as a few seconds. The decay in signal strength is due to destructive phase interference caused by the radial expansion of diffusion of the trail's electrons.

Meteor trails with electron line densities greater than 10^{14} electrons/meter actually reflect signals and are called overdense. Here, the line density is so great that radio signals cannot penetrate them and are reflected instead of being re-radiated. There are no distinctive signal patterns associated with overdense trails except that the signals usually reach higher amplitudes than underdense meteors and last longer. Signal fading often occurs due to reflections from two parts of the trail constructively and destructively interfering. Ionosphere winds also blow the trails around, causing some of the fading. Thus, due to the unpredictable nature of the overdense signals, no useful theory has been developed to describe them.

Other means of communication over a typical MBCS are aircraft reflections and sporadic "E". The airplane reflections usually last many seconds and are characterized by a great deal of signal fading. The aircraft's altitude limits the range of useful communications. Sporadic "E" is a transient or irregular layer of the ionosphere, which results in a reflecting surface, providing a low loss continuous communication path. Sporadic "E", in the mid-latitudes, is more prevalent during the summer months of June and July, and has been observed to occur for periods of time up to several hours.

2.4 Meteor Burst Communication Performance Considerations

In the application of Meteor Burst Communication to specific applications, one must consider constraints imposed by basic characteristics of the technology. These constraints are due to the physical properties of the meteor trail medium and the limitations of the current state of the art equipment development. Table B-2 provides a summary of the constraints or parameters and their influence upon a meteor burst system design. Detailed meteor burst performance relationships are shown in "Analysis of Meteor Burst Communications for Navy Strategic Applications."[2] These relationships will be used in deriving performance predictions for the Vessel Tracking System requirements.

---

[2] Analysis of Meteor Burst Communication in Navy Strategic Applications. MCC Document No. 797, Naval Ocean Systems Center Contract No: N66001-79-C-0460

TABLE B-2. METEOR BURST PERFORMANCE CONSTRAINTS

Parameter	Comment
Communication Type	Digital, voice is not practical.
Operating Range	0-1200 statue miles, relays can extend this range.
Operating Frequency	30 to 200 MHz. The most practical range is 35 - 50 MHz. At higher frequencies, performance is reduced, however, privacy and survivability is enhanced.
Burst Time/Duty Cycle	The time available for communications on each "burst" varies with operating frequency and range. Average burst time duration increases as range increases and decreases as operating frequency is increased.
Space Diversity	Signal footprint is relatively small, a few miles at short ranges (100-400 miles), and becomes increasingly larger at longer ranges (30-50 miles).
Diurnal Variations	Meteor rate (meteors per hour) varies as to time of day. This rate will vary at an average between 3 and 4 to 1 between morning and evening hours. The morning hours have the higher rate.
Annual Variations	The maximum meteor rate is in the summer-fall months and the minimum meteor rate time is the winter-spring periods. The variation of the rates is in the region of 3 to 1.

3. ALASKAN METEOR BURST COMMUNICATION SYSTEM

3.1 Description

The Alaskan Meteor Burst Communications System (AMBCS) is owned and operated by five Federal Agencies, Bureau of Land Management, National Weather Service, Soil Conservation Service, U.S. Army Corps of Engineers and the U.S. Geological Survey. The system consists of a master station, located at BLM properties at Campbell Air Strip, near Anchorage, and a number of remote terminals operated throughout the state of Alaska. The system is used for both data acquisition and limited communications, thus having the basic capabilities required by the Prince William Sound Vessel Tracking System.

Normal operation has a master station continually transmitting an encoded signal probing the skies for meteor trails. The remote stations are dormant, continually monitoring for the master station's probing signal. Whenever a signal is detected, the code is examined to see if the master is requesting him or his particular group to send in data or a message. The remote station only transmits his short data block or message once, thus it's transmissions are generally limited to less than 100 milliseconds. An acknowledgement is transmitted by the master if the data is detected to be error free.

The application of the AMBCS for the Vessel Monitoring system is shown on Figure B-3. The master station continually probes the sky between Anchorage and Valdez for useable meteors. When a link between a vessel and the master station occurs, the position data is transferred to the master station. The master station collects the vessel position data and, at the proper time intervals, delivers the position data to the Vessel Tracking Center at Valdez, via phone or microwave lines.

3.2 Area of Coverage

The 1200 mile meteor burst capability permits communications up to that range from Anchorage. This includes the

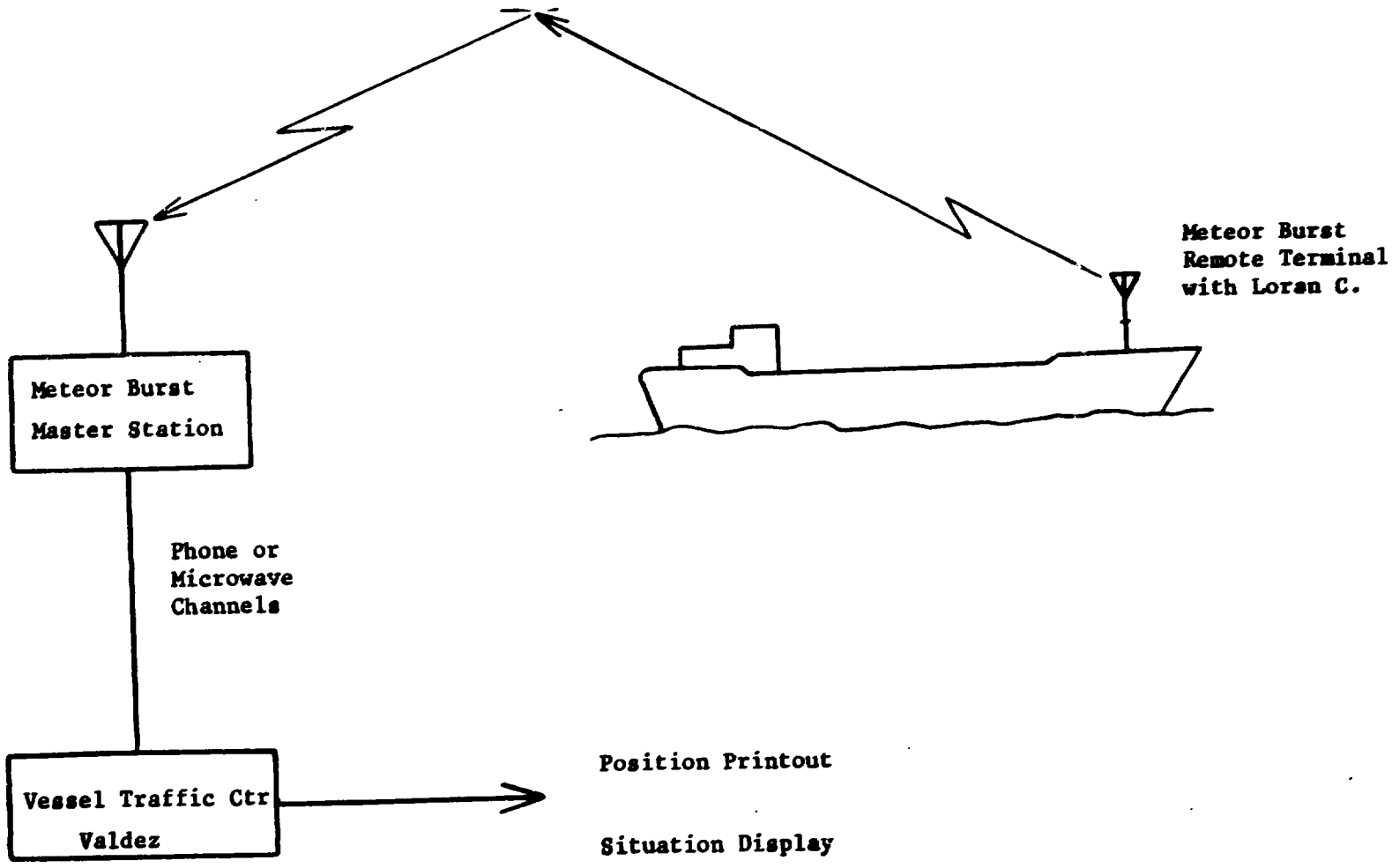

FIGURE B-3: VESSEL MONITORING (DATA TELEMETRY BY METEOR BURST)

whole state of Alaska, with the exception of the last few Aleution Islands. Figure B-4 shows this area of coverage.

3.3 AMBCS Equipment

The meteor burst terminals are of two general types, the master station and the remote transponder. Two operating frequencies are used so the master station can simultaneously probe for remote responses and receive their signals. Table B-3 lists the general specifications for the AMBCS.

3.3.1 Master Station Figure B-5 shows the major elements of the AMBCS Master Station.

Antennas

Up to six Yagi antennas are positioned around the master station to provide the desired 360° azimuth coverage. One of the six has not been connected at this date, thereby approximately 300 degree coverage is currently available.

Transmitter/Exciter

The transmitter is a 2KW Henry Ultra Linear, where power is split to three of the antennas at a time. Approximately 500 watts per antenna is available. Transmit filters are installed to reduce the amount of spurious noise in the receive frequency spectrum.

Receiver

The receiver is a Costas Loop demodulator detecting biphase PSK signals. These receivers are connected to one of two sets of antennas.

Processor

A Data General Nova 3 computer with 32K of core currently controls the AMBCS Master Station. Four input/output ports are currently available:

1) A maintenance teletype
2) A serial-teletype loop servicing the users at their downtown Anchorage office.
3) A line to a University of Alaska computer for long term data archives and special processing.
4) A special BLM Cadastral terminal to support the survey camps remote areas of Alaska

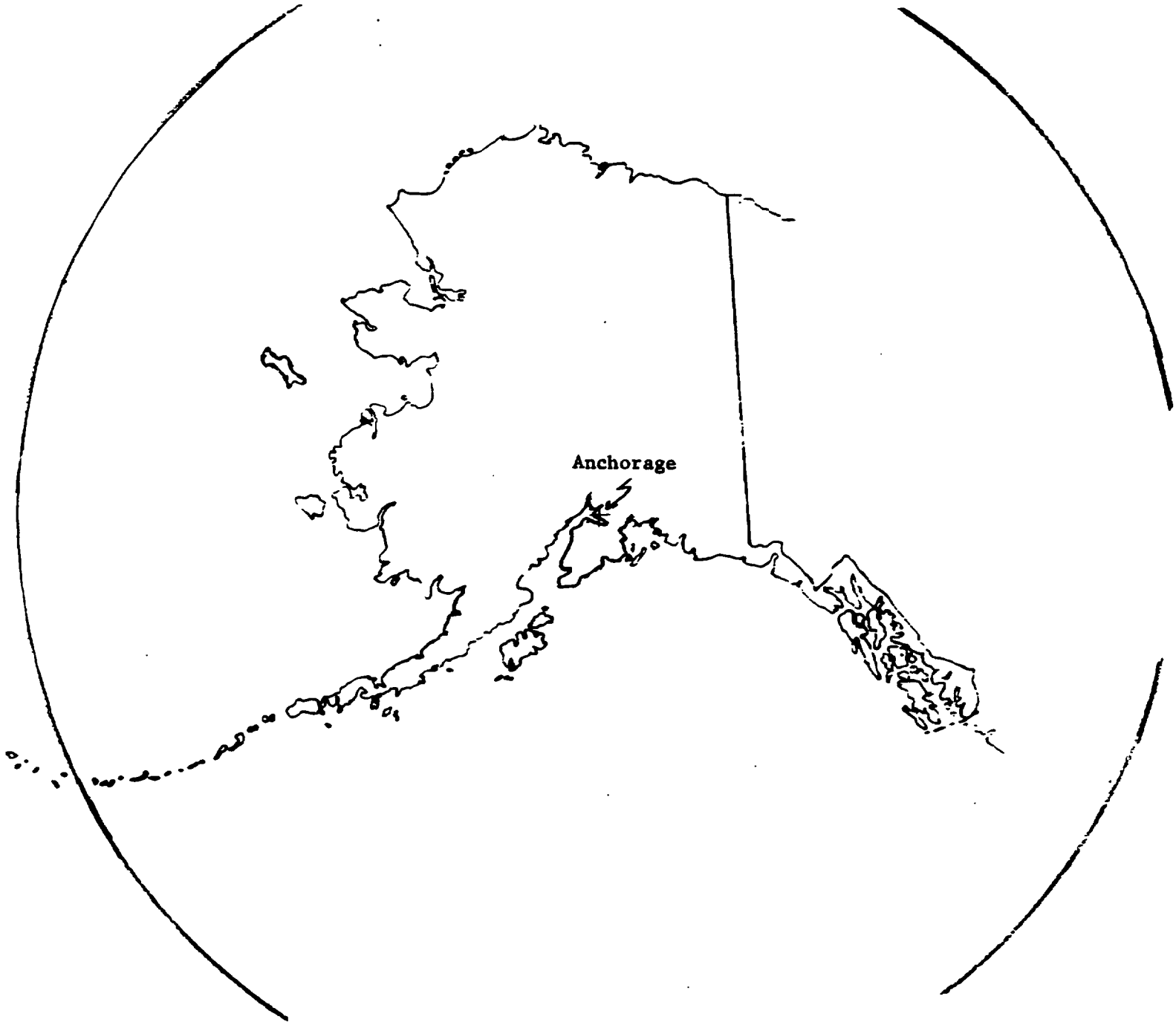

FIGURE B-4: ALASKA METEOR BURST COMMUNICATION SYSTEM (AREA OF COVERAGE)

TABLE B-3. AMBCS GENERAL SPECIFICATIONS

		Master Station	Remote Station
1)	Transmitter	500 Watts	300 Watts
2)	Modulation		
	(a) Tx	Low index PSK	BiPhase PSK
	(b) Rx	BiPhase PSK	Low Index PSK
3)	Antenna	Five element	
	Type	Yagi	
	Gain	10dBi	*
	Polarization	Horizontal	Horizontal
4)	Prime Power	7.5KW	Battery Operated
5)	Operating Freq. (two required, separated by 1.5 to 3 MHz		
6)	Bit Rate	2 Kbps	2Kbps

* Remote Station Antennas are dipoles or Yagis depending on performance desired.

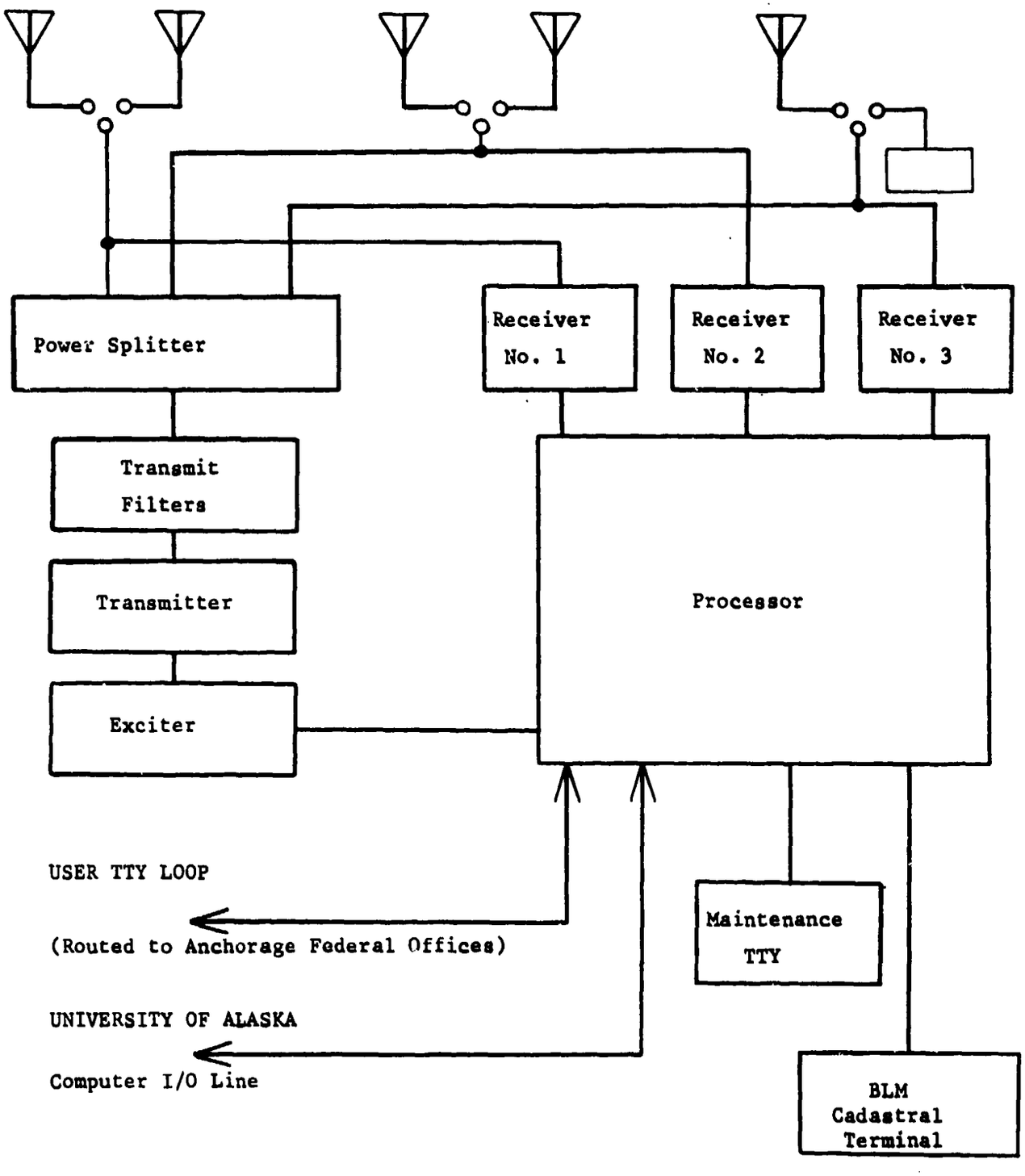

FIGURE B-5: ALASKAN METEOR BURST COMMUNICATION SYSTEM (MASTER STATION)

3.3.2 Remote Terminal The remote terminals are small, low powered units designed for battery operation. Two configurations share the master station, 1) data acquisition and 2) communications. Figure B-6 shows block diagrams of both configurations. Most remotes are connected to a dipole antenna, however, some communication terminals desiring higher performance use multi-element yagi antennas.

3.4 Operation

The master station illuminates the Alaskan area with probing signals with up to four different codes. This permits the polling of four separate groups. The remote terminal is normally dormant, listening for the master's signal which indicates the presence of a communication path. If the remote station's responding code is being transmitted by the master, the remote will respond with data or a short message. The data or message is routed to the user terminals where it is printed on teleprinters. The data is also stored for transfer to the University of Alaska computer for long term data storage. Due to the high power used in meteor burst systems, ground wave operation has been consistently experienced at ranges of 100 - 125 miles.

3.4.1 Special Communication Terminals Two special communication terminals operate on the AMBCS, 1) flight weather data for the FAA and 2) BLM Cadastral survey logistic messages from remote survey camps. These terminals will respond to any master station probing signal, thus providing a high message transfer reliability. The FAA message, when it is received error free at the master, will be transmitted to a downtown Anchorage FAA terminal, by the master station's transfer for insertion onto the FAA flight weather data link. The FAA Cadastral Survey camp messages are routed to a special terminal for their communications traffic.

Messages can also be sent outbound to the FAA and BLM remote terminals by the master stations.

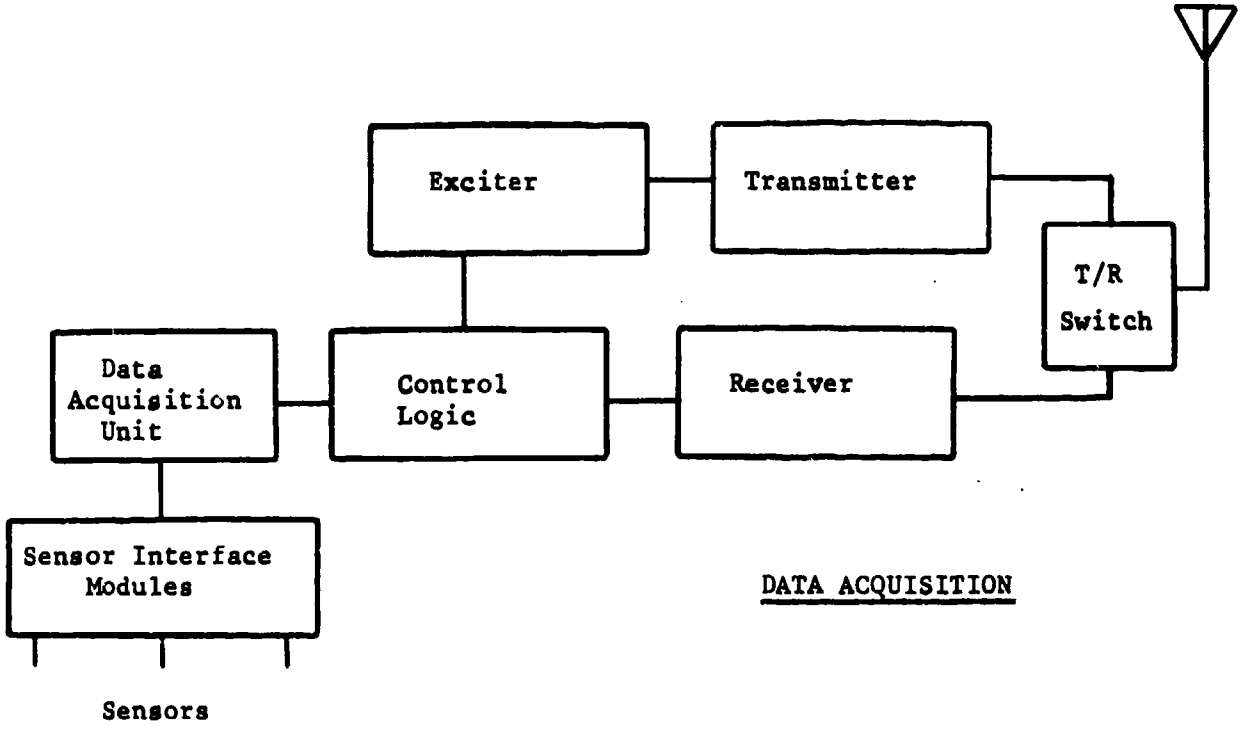

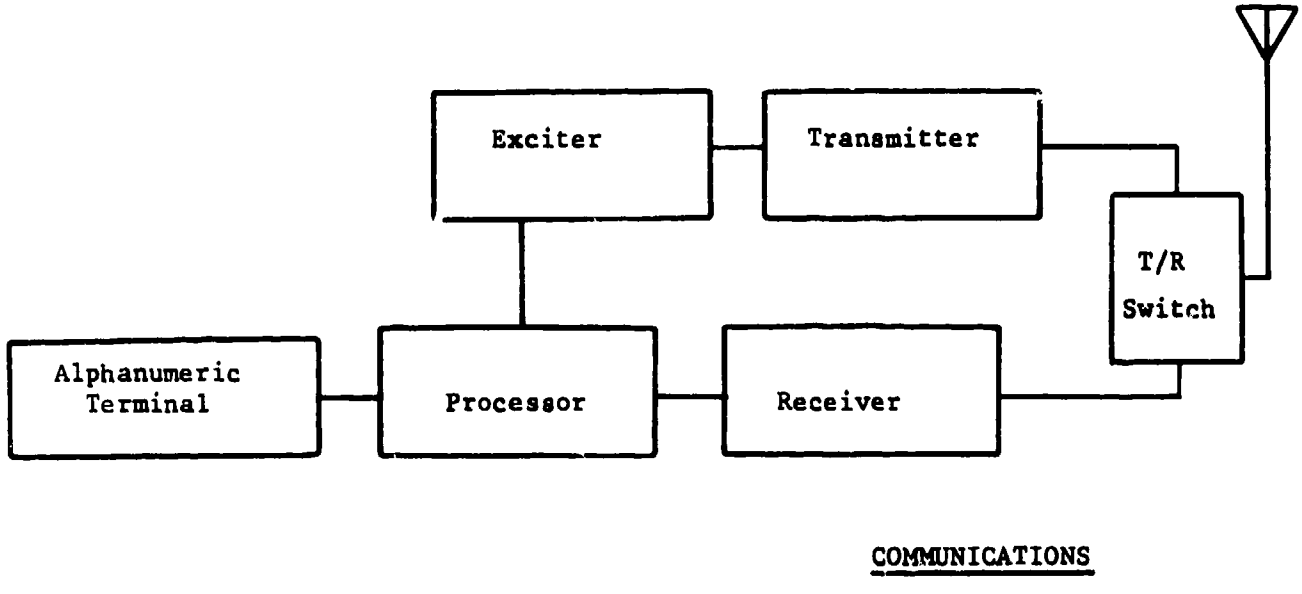

FIGURE B-6: ALASKAN METEOR BURST COMMUNICATION SYSTEM (REMOTE TERMINALS)

4. PRINCE WILLIAM SOUND METEOR BURST SYSTEM

Locating a meteor burst master station in the Prince William Sound area would have a number of advantages. First, if positioned ideally, the system could cover all of the lanes of the Traffic Separation Scheme (TSS), and the Tanker queueing area, using ground wave communications, thus providing immediate response to interrogation. Three potential sites are candidates for consideration, Johnson Point on Hinchinbrook Island, Potato Point near the entrance to Port Valdez, and at the C.G. facility at Valdez. The meteor burst system would be similar to the AMBCS system. Figure B-7 shows the main elements of the shipboard terminal.

4.1 Johnson Point Site

The site would command clear access by ground wave to all of the TSS area, the tanker mooring area south of Knowles Head and into the entrance of Valdez Arm. How far into Port Valdez operation can be accomplished by ground wave is questionable but possibly all the way in. However, a simple low powered interrogator at the Valdez Coast Guard facility could readily cover any holes in the Johnson Point coverage. Thus, the Prince William Sound area would provide transponder coverage by ground wave, not by Meteor Burst communications. Ships approaching the entrance, up to the 24 hour report in point, could be covered by meteor burst.

A secondary application for meteor burst communications from Johnson Point is the tracking and communications to Coast Guard assets throughout Alaska. This would include ships, aircraft (fixed wing and helicopters) and navigational aids. Figure B-8 shows the coverage possible, by meteor burst, from Johnson Point.

Johnson Point, although isolated, has a FAA facility with diesel generated main power and back up, thus providing high reliability for availability of power. Two communication channels exist to Valdez. The first is the Coast Guard microwave link to Naked Island, then to Potato Point and on into

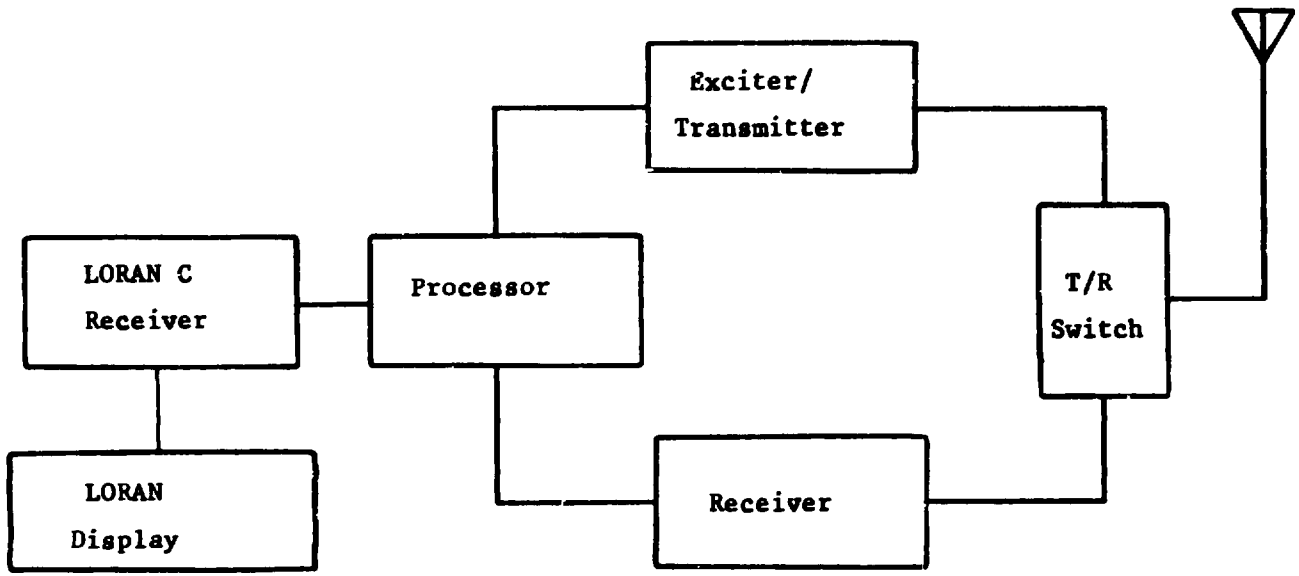

FIGURE B-7: METEOR BURST SHIPBOARD TERMINAL

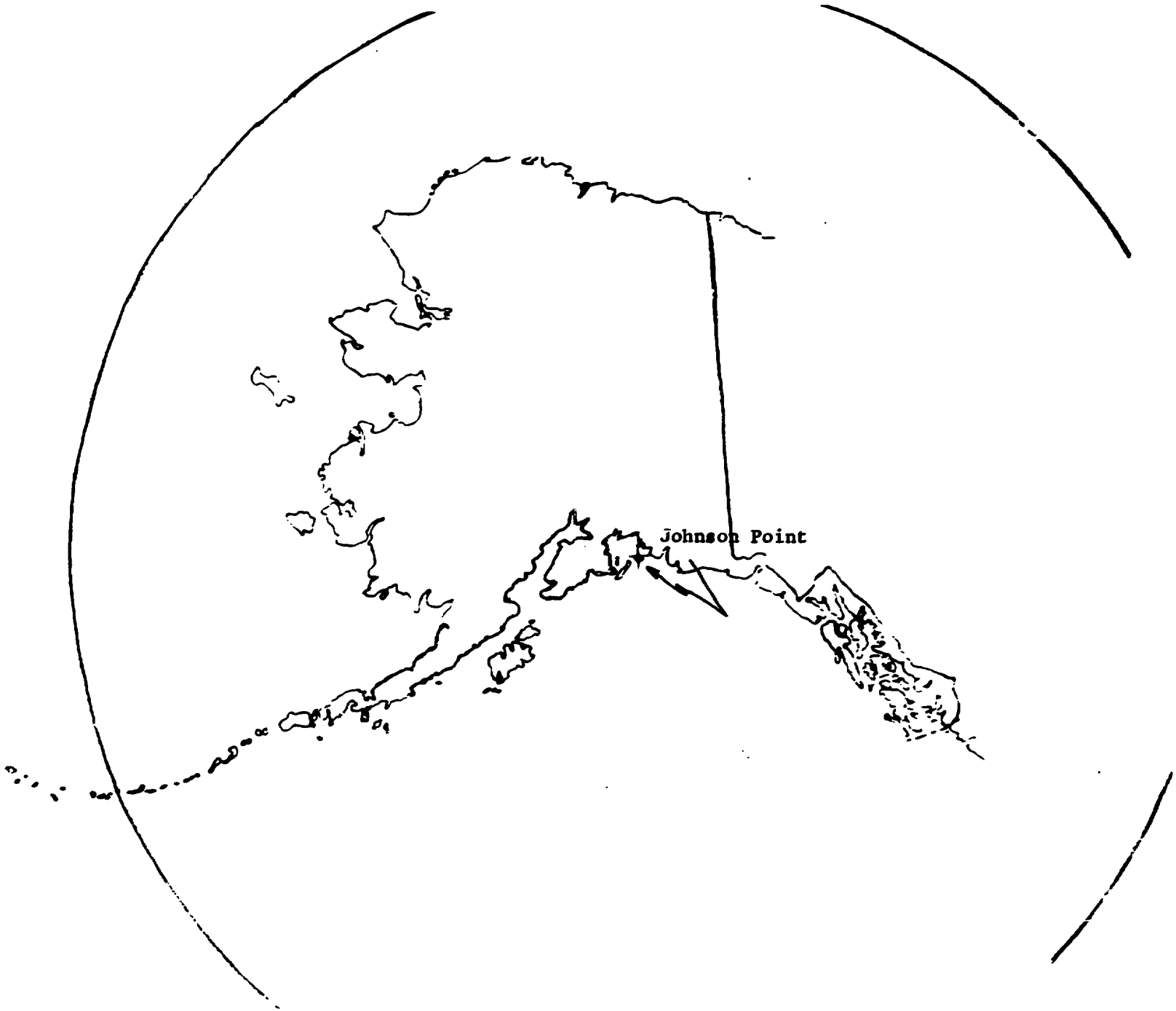

FIGURE B-8: AMBCS COVERAGE (MASTER STATION AT JOHNSON POINT)

Valdez. The second, a FAA VHF link to Strawberry Point, connecting to an Alascom terminal, then into Valdez on the Alascom network. Thus primary back up communication links to Valdez are available from Johnson Point.

4.2 Potato Point

The Potato Point facility currently houses the radar used in the current VTS, thus power and communications are available. Ground wave coverage by meteor burst would be possible throughout the VTS area, including Valdez Channel and Port Valdez. Coverage at the moorage, tanker queueing area, is probable but questionable.

Communications to Valdez could also be implemented within the meteor burst system. A remote receiver could be located at the Coast Guard facility at Valdez, and have the meteor burst master station transmit tracking and message data to that particular remote for printout or computer entry.

4.3 Valdez Site

A site at or near the Coast Guard facility at Valdez would be partially screened by the local horizon, however effective meteor burst communication coverage can be expected out to 500 miles. Line-of-sight, or ground wave, operations would occur inside the Port of Valdez in the vicinity of Potato Point. The advantage of this site is that the meteor burst master could be directly tied to the VTC for data printout or display.

5. PERFORMANCE

By locating a meteor burst master station in the Prince William Sound area, all vessel tracking will be on ground wave, thus response will be immediate. Using the AMBCS, the range is short, 100 - 150 miles, in covering the Prince William Sound area from Achorage. The mountainous terrain between the two make ground wave unlikely, however, from experience, that range is capable of ground range operation.

Meteor burst signals at this range are short in time duration, 50-75 milliseconds, at the operating frequency of the AMBCS. Thus, the data message should be structured and the bit rate selected to result in a message shorter than 50 milliseconds.

Meteors occur randomly as a function of time, however, they are Poisson distributed. Performance defined as the message delivery time or "waiting time", can be derived as a function of a desired reliability or probability.

The Poisson expression

$$P = 1-e^{-\bar{n}\,t/60},$$

where P = Probability

$\bar{n}$ = number of meteors per unit of time (per hour)

t = waiting time in minutes

Determining the value of $\bar{n}$ is defined in Section 2 of "Analysis of Meteor Burst Communications for Navy Strategic Applications", and for the Alaskan system, the average for the entire year is calculated to be 34, assuming that the message length is .75 of the average meteor burst duration. This would require that the bit rate on the remote to master link be at least 4 kilobits. The current system is at 2 kilobits. The waiting time at .90 reliability will thus be,

Average = 4.1 minutes

Best Case = 1.4 minutes

Worst Case = 12.1 minutes

The worst case will occur during early evening for 2-3 hours for four months of the year, January through April.

Performance will be better at longer ranges for the 3 and 24 hour report in. At the 24 hour report in, assuming the tanker is arriving from the south, waiting time will be approximately half that in Prince William Sound.

Master Stations located at further ranges than Anchorage, such as Juneau or Kodiak will also have waiting times approximately one half that of the AMBCS.

APPENDIX C

SYSTEM SPECIFICATIONS AND COST ESTIMATES

1. System Considerations

Prior to preparing a shipboard terminal specification, a number of system definitions have to be considered. Task I, by Technical Memorandum, provided a system description and a performance estimate, thus providing the basis for the system considerations leading to requirements. Table C-1 lists these considerations and requirements.

2. Shipboard Terminal Specifications

The shipboard terminal will combine a LORAN C receiver to a meteor burst transceiver with their required power supply and antennas. Appendix D provides this specification.

3. Cost Estimates

Equipment, installation, operation and maintenance make up the cost elements to be considered in having and using a shipboard terminal.

Equipment

The equipment is composed of a LORAN receiver, Meteor Burst Transceiver, power supply, and antennas for each. Assuming quantities of 50 to 100 units,

Item	Cost Estimate
Loran Receiver and Antenna (includes Lat-Lon Converter)	$ 2,000.00
Meteor Burst Transceiver	$2,500.00-$3,000.00
Power Supply	$1,200.00
Teleprinter	$1,000.00

TABLE C-1. SYSTEM CONSIDERATIONS/REQUIREMENTS

Performance:	Position Reports are required every 15 minutes outside of Hinchinbrook Entrance and 5 minutes inside Prince William Sound.
Report Content:	Name of ship and identification number on initial message. Ship's ID, position on all subsequent reports.
Message Transfer Timing:	Initiation of report transmission to the reception of the Master Station's acknowledgement shall be less than 30 milliseconds.
Area Coverage:	The principal coverage area shall be 0-300 miles, however longer ranges are desireable.
LORAN C Receiver:	LORAN C receivers have been on the market and sold and maintained by marine equipment outlets for a number of years. Microprocessors are becoming standard in these receivers, providing the Lat-Lon conversion at reasonable cost.
Specification:	Report of Special Committee N. 70, "Minimum Performance Standards, Marine Loran-C Receiving Equipment"
Meteor Burst Transceivers:	To date, the only significant production units are used in the Dept. of Agriculture's SNOTEL system and the Alaskan Meteor Burst Communication System (over 500 units). MB transceivers have been interfaced to three (3) different manufacturers' LORAN C receivers and successfully demonstrated by the Air Force, Navy and BLM.
Environment:	Equipment-Marine, generally located in the bridge area. Antenna-Marine, directly exposed to the salt air.
Prime Power:	115 or 230 VAC, 50-60Hz.

Installation

The major task in the installation will probably be the routing of the coaxial cables for the two antennas. Assuming the equipment will be located in a room on topside, this task should require minimal routing problems. The antennas are physically small and light in weight, therefore they should be readily mountable to existing structures. The LORAN C MPS describes recommended installation of LORAN antennas.

Technicians, experienced in the installation of radio equipment, would be fully capable of installing and checking out the shipboard terminal. Two men should be able to install the terminal within four houus.

Operation

The operation of the shipboard terminal would be no more demanding than that currently required to perform the voice check into the Valdez Control Center and operate the current LORAN C receivers. Meteor Burst transceivers operate on fixed frequencies with "automatic" operation. No adjustments or channel selections are required.

Maintenance

A spare LORAN C receiver and MB transceiver should be carried. However, failure rates on this type of equipment, all solid state, is low. The SNOTEL MB transceiver failure rates have been in excess of a year.

Dealers in LORAN C equipment are in virtually every port city in the United States and Alaska and could provide service for the LORAN equipment. MB transceivers are not in universal use, however Meteor Data Incorporated in Anchorage, Alaska, contracts the maintenance on the current Alaska Meteor Burst Communication System and is fully capable of servicing shipboard MB transceivers.

APPENDIX D

TECHNICAL MEMORANDUM II

SHIPBOARD TERMINAL SPECIFICATION

PRINCE WILLIAM SOUND VESSEL TRAFFIC SERVICE

1. Description

The function of the Shipboard Terminal is to generate and telemeter a ship's positional data to the Vessel Traffic Center (VTC) at Valdez, Alaska. The data is to be transmitted by meteor burst communications to a master (interrogating) station. The master station in turn, transmits the data to the VTC by phone line or wire line (if the master is located at or near the VTC building). This equipment is to operate on board ships and should be properly designed for the marine environment.

The shipboard terminal is comprised of two units, (1) a LORAN C receiver and (2) a Meteor Burst Transceiver. Each unit requires its own antenna. The Loran C receiver detects LORAN signals from the LORAN transmitting terminals, then determines the positional data. An alphanumeric terminal is included to initially enter the ship's name and identification when it enters the Prince William Sound Vessel Traffic Service. A power supply is required to convert the prime power of 115 or 230 VAC to required D.C. power to operate the units. Figure D-1 is a functional block diagram of the shipboard terminal.

The LORAN C receiver, at specified time intervals, transfers the positional data to the MB transceiver. The MB transceiver stores this data, ready for transmission whenever the master station interrogation is received.

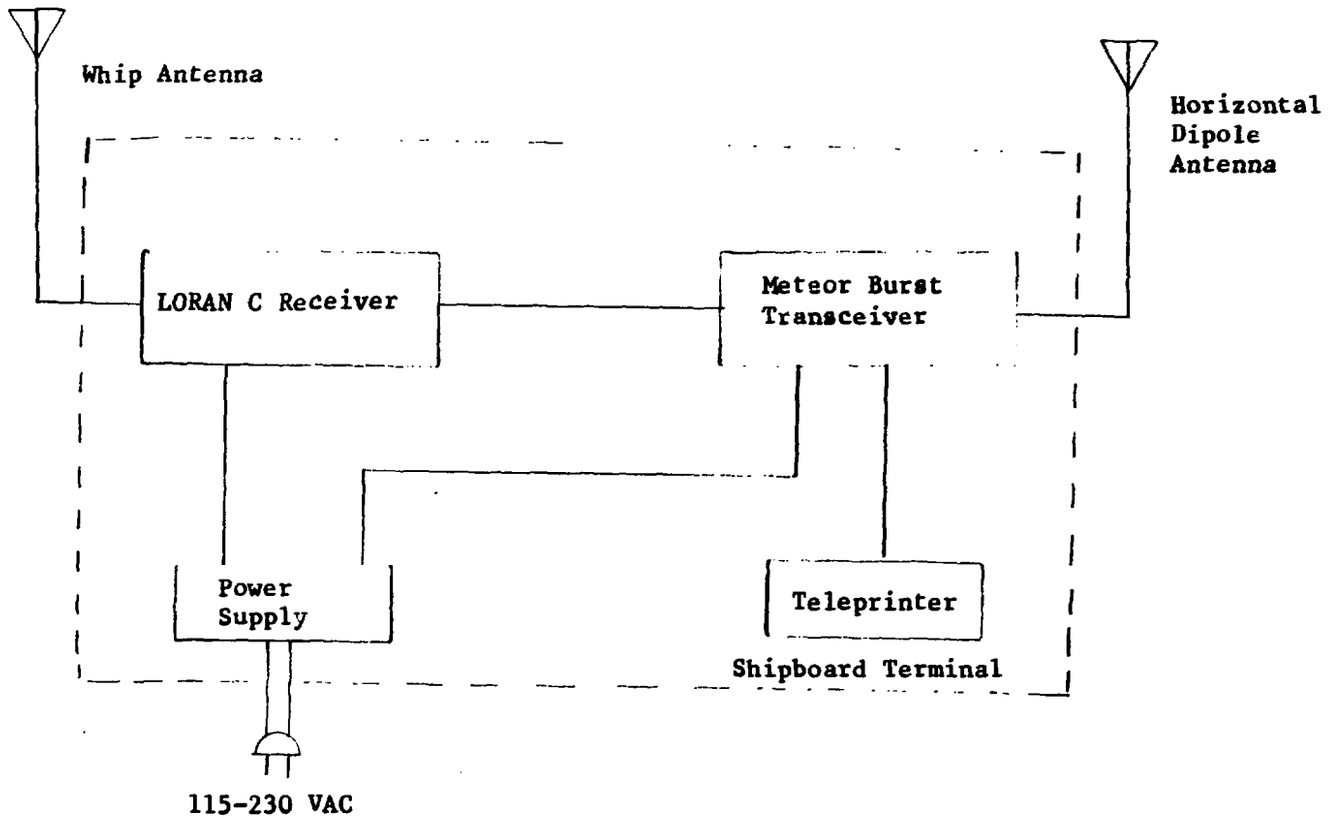

FIGURE D-1: SHIPBOARD TERMINAL FUNCTIONAL DIAGRAM

The meteor burst telemetry system will primarily operate at ranges under 300 miles. Thus, it is important to minimize the time to send the positional data. Data bit rates, in the range of 4 to 8 Kbits will be required to provide data transmittal times compatable with meteor burst channel availability time.

2. Operations Requirements

The electronic equipment will be required to operate in a marine environment, however not directly exposed (heated rooms). The antennas will be required to operate when installed where they will be directly exposed to the outside marine environment.

The shipboard terminal must:

1) Detect LORAN station signals and determine the two time differences of these signals (TDs) or (optionally) calculate Lat-Lon position data.
2) Update the positional data to a meteor burst transceiver at 0.5 to 1.0 minute intervals.
3) Detect and recognize the meteor burst master station's interrogation code.
4) Respond with the ID message or LORAN data.
5) Detect and recognize the master station's acknowledgement code indicating error free reception of the shipboard terminal's message.
6) Inhibit response transmissions for a predetermined period of time after a master station's "ACK" is received.

2.1 Prime Power

The shipboard terminal shall operate on either 115 or 230 VAC $\pm$ 15%, 50-60Hz.

2.2 Communication Formats

Three formats are required:

1) The master station's probing signal
2) The shipboard station's response
3) The master station's acknowledgement, indicating

successful reception of the shipboard terminal's response. All formats should be kept to a minimum in length so that the transfer and acknowledgement cycle can be completed within a single meteor burst.

2.2.1 Master Station's Probing Format - The length of this coded signal, which is continually repeated, shall be less than ten (10) milliseconds. It shall include a bit synchronization pattern and a limited number of commands. One of the commands will be a request for data. Other commands may be specific directions or messages to a ship.

2.2.2 Shipboard Station's Response - This signal should be minimized in length. All numerical data shall be transmitted in binary or BCD. The normal response is composed of the following:

1) A bit synchronization signal whose duration is the receiver acquisition time, a maximum of ten (10) milliseconds.
2) A frame synchronization pattern.
3) Identification code to relate to the name of the ship. Parity protection should be included in this code.
4) The LORAN data, either in time differences or in Lat-Lon. Included will be a status data indicating good or questionable data or invalid LORAN data.
5) An error detecting code. A CRCC-9 code or equivalent should be satisfactory.

A one time message is transmitted in place of the LORAN data. This is entered into the meteor burst transceiver by the alphanumeric terminal. The message consists of up to 25 characters giving the ships name and an identification number. After the shipboard terminal receives an "ACK" from the master station, it will automatically revert to transmitting the LORAN data on further interrogations from the master station.

2.2.3 Master Station's "ACK" - This format will contain the bit synchronization pattern, (ten milliseconds maximum), a frame sync pattern and a code indicating the "ACK". The ACK code could be the ship's address or a repeat of the check code received from the shipboard station.

2.3 Interrogation and Response Cycle

The following make up the significant events which make up the operational interrogation and responses cycle.

2.3.1 Master Station Probe Recognition - The shipboard terminal continually monitors for the master station's coded polling signal. When detected, the code is examined and if commanded, a response is given.

2.3.2 Shipboard Terminal's Response - The master station receives the shipboard terminal's response and checks the error detection code for errors. If errors are detected, the message is rejected or flagged as an error message and not acknowledged.

2.3.3 Master Station's Acknowledgement - If the error detecting code at the end of the shipboard terminal's response indicates no errors, the "ACK" signal is transmitted within 1 millisecond of the error code's detection.

2.3.4 Shipboard Station's Inhibit - The shipboard station, on reception of the master station's ACK, will ignore all further master station requests for data for a period of two minutes. This inhibit time is to be a programmed parmeter, and modifiable by teleprinter entry.

2.3.5 Timing - At 200 miles range, the cycle between the remote station's response and reception of the master station ACK shall not exceed thirty (30) milliseconds.

2.4 LORAN - Meteor Burst Interface

The interface of typical LORAN C receivers is RS232C, however some LORAN receivers have parallel interfaces. The parallel interfaces will require minor adaptation to the meteor burst transceiver. LORAN positional data will be passed to the meteor burst transceiver at one minute intervals. Along with positional data will be receiver status so the MB processor can assess data quality.

2.5 Operator Controls and Indicators

Meteor burst transceivers operate on fixed frequencies, therefore requiring no operater interaction for initialization other than turning power on. LORAN receivers will require attention to insure proper operation, slave station selection, etc.

2.5.1 Indicators - The following indicators will be incorporated on the shipboard terminals:

1) Current LORAN position in time differences or Lat-Lon.
2) LORAN receiver status. Loss of Lock (Blinking indication)
3) Master Station "ACK" received, resettable by pushbutton.
4) Master station "ACK" not received for 15 minutes.
5) Test indicators, indicating proper operation of the terminal, in a test mode.

2.5.2 Alphanumeric Terminal - A teleprinter terminal with a RS232C interface connects to the shipboard terminal. The teleprinter is used to enter the ship's name and ID number and for self-test control and diagnostic and status printout.

3. Equipment Specifications

The shipboard terminals will be operated in a marine environment, with their antennas directly exposed to the salt air. The elements of the shipboard terminal are shown in Figure D-1.

3.1 Operating Temperature

The equipment shall be capable of operating at temperatures between -10 and 50°C. The antennas shall be capable of operating in -40 to +50°C.

3.2 Meteor Burst Transceiver

The meteor burst transceiver is composed of a transmitter, receiver and control microprocessor. Operation is simplex, controlled by the Transmit/Receiver Switch. Figure D-1 is a block diagram of the MB Transceiver.

3.2.1 Transmitter/Receiver - The requirements for the Transmitter/Receiver are given in Table D-1.

3.2.2 Control Microprocessor - The control firmware within the microprocessor and the interfacing circuitry to the MB Transmitter/Receiver and LORAN C receiver, performs the following functions:

1) Receives message data from the alphanumeric terminal and stores for transmission. This message data has priority over LORAN data.
2) Receives periodic updates of LORAN data from the LORAN receiver. The new data is stored for transmission in place of the old data.
3) Assess quality of data from LORAN status message and format a code indicating good, questionable or invalid LORAN data.
4) Monitors the receiver for incoming signals from the master station.
5) Generates the shipboard station's response format, message or LORAN data and interfaces to the transmitter. Also generating an error detecting code to be attached to the end of the message.
6) Controls the Transmit/Receive Switch.
7) Performs all other necessary timing, controls and self-test functions.
8) Controls display indicators.

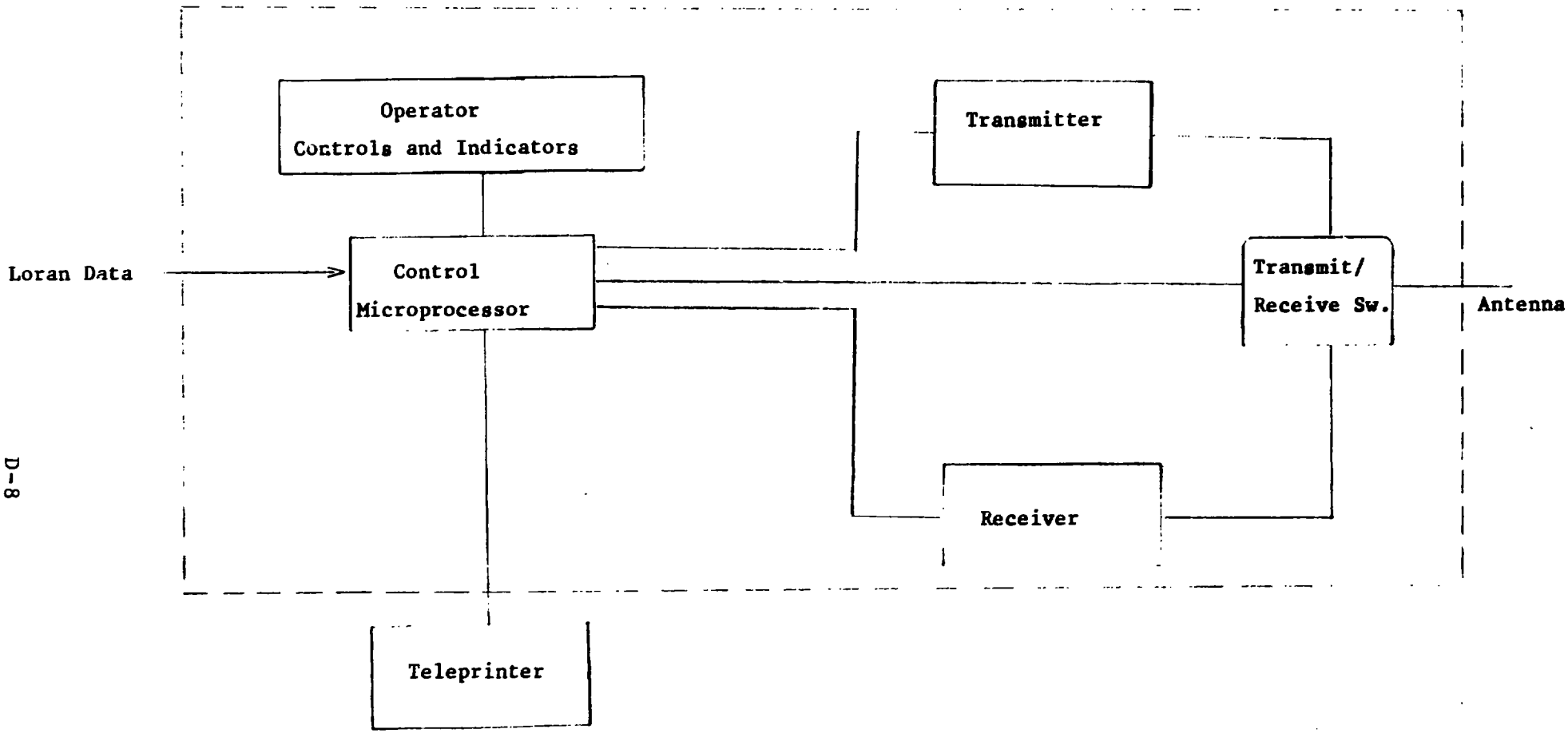

FIGURE D-2: METEOR BURST TRANSCEIVER

TABLE D-1. SHIPBOARD TERMINAL SPECIFICATIONS (TRANSMITTER/RECEIVER)

Frequency	40-50 MHz
Transmitter	
Power	200-300 watts
Modulation	BiPhase PSK, MSK,DPSK,QPSK
Bit Rate	4-5Kbps
Duty Cycle	10%
Harmonic/Spurious Suspension	80db below full power
Receiver	
Modulation	Non Coh. FSK, Lon Index PSK
Bit Rate	4-8 Kbps
Sensitivity (BER=10^{-3})	-123dBm (Receiver Noise Only)
Noise Figure	4dB Max
Signal Acq. Time	10 milliseconds Max.
Selectivity	60 dB Minimum
Spurious Response Attenuation	50 dB Minimum
Image Response Attenuation	50 dB Minimum
Intermodulation Spurious Response Attenuation	50 dB Minimum
T/R Switch	
Switch Time	1 microsecond
RF Power	300 watts

3.3 LORAN C Receiver

The LORAN C receiver must have an electrical cable interface, preferably RS232C, however other electrical interfaces are possible and can be made acceptable by the meteor burst transceiver. The positional data may be in either time differences (T.D.s) or Lat-Lon. The specific LORAN C receiver may be specified by the ship owner.

3.4 Antennas

3.4.1 Meteor Burst - The MB antenna pattern coverage is omni in azimuth and near 90° coverage in vertical. Polarization is horizontal. Either loops or crossed dipoles would provide the omni coverage, and their height above the ground plane would provide the vertical coverage.

3.4.2 LORAN C - The LORAN C antenna is a vertical whip, to be specified by the manufacturer of the LORAN C receiver.

3.5 Alphanumeric Terminal

The terminal will be a teleprinter capable of initializing the shipboard terminal, inserting messages and printing out station status and self test results.

3.6 Size

Not to exceed one cubit foot.

3.7 Weight

Not to exceed 15 pounds, exclusive of the power supply. (Power Supply shall be in a separate container.)

APPENDIX E

FEASIBILITY TEST PLAN

1. TASK DESCRIPTION

Over the horizon communications by traditional HF radio has been unreliable in auroral regions such as encountered in the State of Alaska. A Meteor Burst Communication System (MBCS) has been installed in the State of Alaska and demonstrated reliable operation for over the horizon communications for the past several years. The objective of this feasibility test is to demonstrate the capability of telemetry of ships'positional data, by using Meteor Burst Communications, to the requirements of the Vessel Tracking System for Valdez, Alaska. These requirements are given in Attachment A of this test plan.

Two potential meteor burst systems can be utilized for a feasibility test,

1) The existing Alaska Meteor Burst Communication System (AMBCS), with its master station located at Anchorage, and 2) An existing government owned mobile system with its master station installed in a small van. The mobile meteor burst system was developed for flight following applications, thus its design and configureation, both software and hardware, are similar to the requirements of ship tracking.

A secondary objective is to determine the ease of installing meteor burst antennas aboard ships to provide full omni coverage to the master station.

2. TEST GEOMETRY

The area in which shipboard terminals will operate during the feasibility test was shown in Figure 1-2. This covers the route taken by the tankers while in Prince William Sound, both in and out of the port of Valdez, and the allocated

moorage area. Also, this will provide coverage out 60 NM from Hinchinbrook Entrance which covers the 3 hour "report in" point. Further coverage is possible, 1000 miles from the Anchorage Master Station and 500 miles from a master station located at Valdez. The Valdez operation is limited to approximately 500 miles due to horizon caused by the mountain range directly to the south of Valdez.

3. TEST PROCEDURE

A minimum of two shipboard terminals will be utilized, one mounted on a tanker that will periodically enter and leave the port of Valdez and the second on a Coast Guard vessel which can move throughout the potential areas of interest (Figure 1-2). The Coast Guard vessel will have the capability to operate in all interested areas of Prince William Sound.

Sufficient data will be gathered to provide the level of performance that the test meteor burst system is capable of providing. With intermittant operation in Prince William Sound, the expected test period will be a minimum of two months. At least four in and out tanker operations and four excursions of the Coast Guard vessel should be made to establish performance levels.

4. EQUIPMENT

The two meteor burst systems considered are the AMBCS with its Master Station located at Anchorage and an existing mobile government owned system to be installed at or near the VTC at Valdez. Both systems will require modifications to perform the Prince William Sound Vessel Tracking requirement. However, since the mobile government owned system was specifically designed for flight following applications, the transition to ship tracking would be simpler and less expensive than modifying the AMBCS.

4.1 Master Station

The modifications to the master station are mainly the increase of the data bit rate, control software and the connection of a phone line interface at the AMBCS Master. Figure E-1 is a block diagram of the Alaskan Master Station with the areas requiring modification shown. The mobile master station will not require the phone line output, since it can be cabled directly to the VTC terminal.

4.2 Shipboard Terminal

The shipboard terminal will be configured similarly to the existing mobile MB transceivers. Figure E-2 is a block diagram of the shipboard terminal denoting the MB transceiver, the LORAN receiver, (GFE from the Coast Guard) and the new items required for the feasibility test. The Coast Guard LORAN C equipment is assumed to be a Teledyne 708 and will require an interface unit to insert the data into the meteor burst control microprocessor.

4.3 VTC Terminal

The VTC terminal for the feasibility test will be a teleprinter, providing a printout of the ship's position. If the AMBCS is used, a telephone line and modems are required.

4.4 Alphanumeric Terminal

The existing mobile Meteor Burst Communication System uses a Termiflex Handheld HT/4 alphanumeric terminal, however none are available currently with the system. The meteor burst transceiver can be interfaced to virtually any alphanumeric teleprinter with a EIA-RS232 interface. The alphanumeric terminal can provide the shipboard station operator status information on link operation and the capability of sending and receiving short messages.

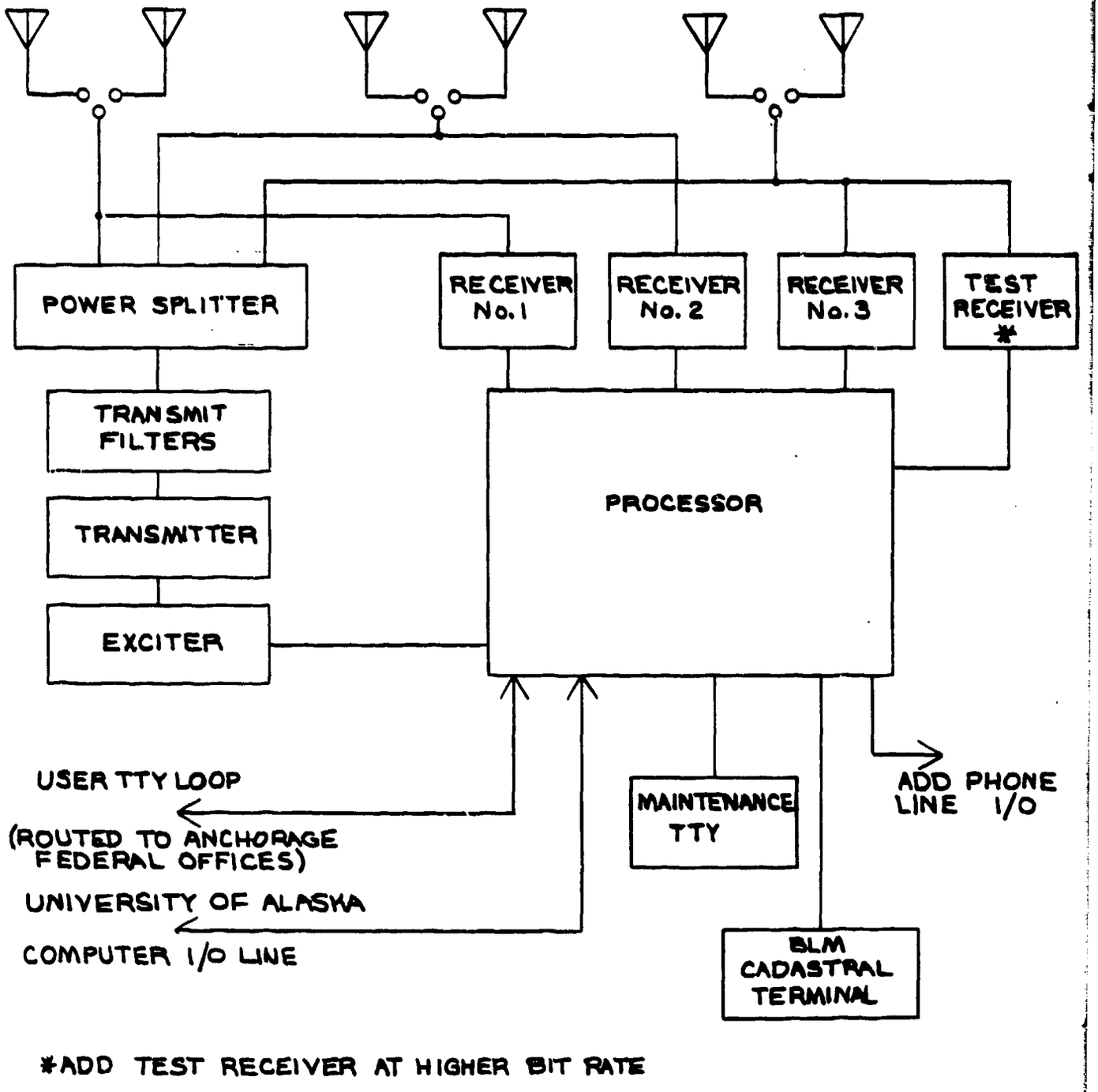

FIGURE E-1: ALASKAN METEOR BURST COMMUNICATION SYSTEM (MASTER STATION)

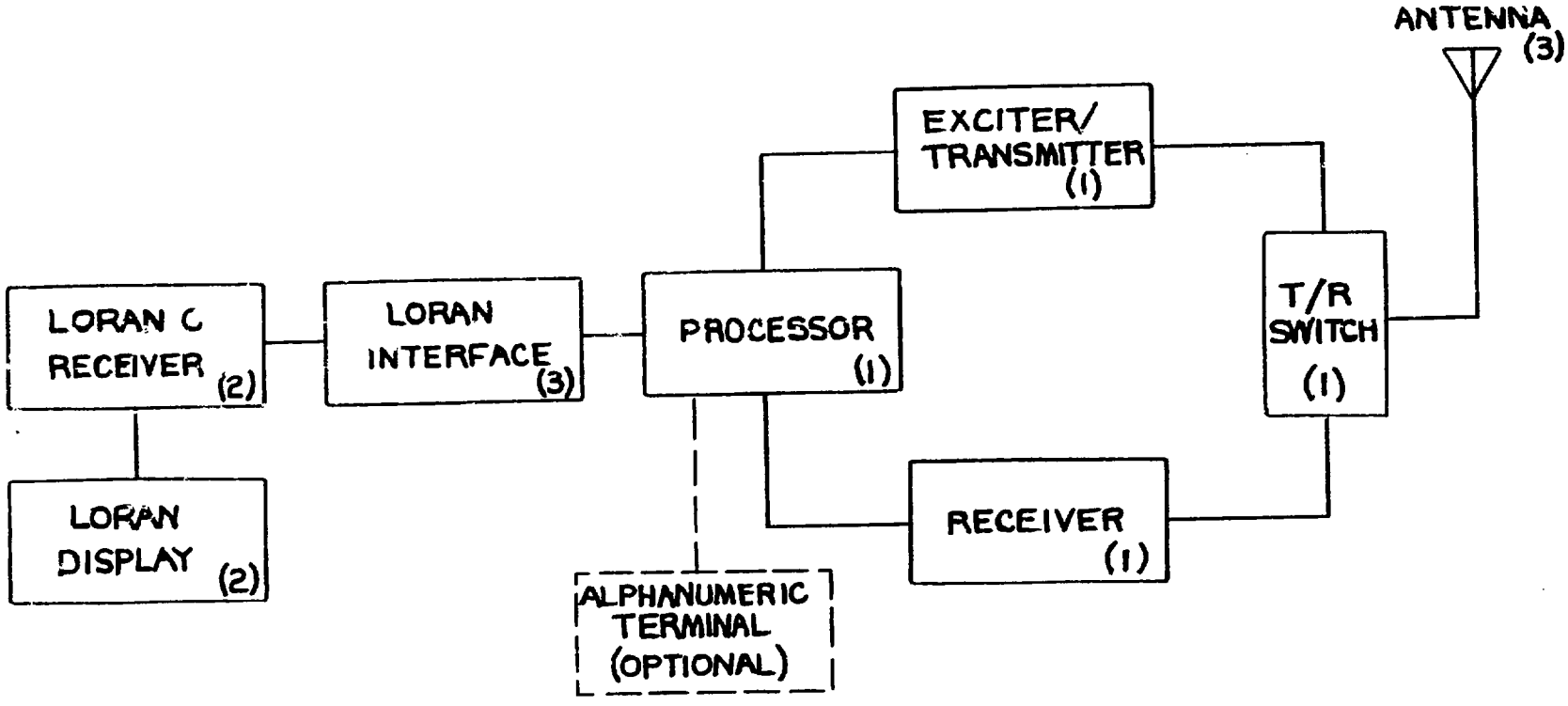

(1) PART OF METEOR BURST TRANSCEIVER
(2) GFE EQUIPMENT (COAST GUARD)
(3) NEW EQUIPMENT FOR FEASIBILITY TEST

FIGURE E-2: METEOR BURST SHIPBOARD TERMINAL

5. INSTALLATIONS

Prior to installation, a survey should be made of the ships which have been selected for terminal installation. The primary purpose is to select antenna mounting locations and cable routing. Thus, the equipment can be properly prepared for quick and easy installation.

5.1 Master Stations

5.1.1 Anchorage The phone lines can be installed prior to the modifications. Two to three days will be required to install and check out the modifications.

5.1.2 Valdez Master Station If the government owned mobile master station is used, the electronic equipment can be removed from the van and moved into the VTC building. No more than two days would be required for this installation.

5.2 Shipboard Terminal

If the antenna mounting hardware is prepared in advance, the shipboard terminal could be installed within half a day.

6. ESTIMATED COSTS

Table E-1 is a breakdown of estimated costs to prepare and initiate the feasibility tests. A summary of the costs is shown on Table E-2. In using the mobile MBCS, two MB remote transceivers are included in the system. The shipboard alphanumeric terminal is not included in the costs on Table E-2.

6.1 Additional Test Support

The technical support identified above is for the installation and the first week of testing. If further support is desired, or required for technical problems, this cost is estimated to be $2,300.00 per week.

TABLE E-1. FEASIBILITY TEST COST BREAKDOWN

TASK	COST	
	AMBCS	VALDEZ
Master Station Site/Ship Survey	$ 2,000.00	$ 2,000.00
Master Station		
Modifications, Developmental (Software and Hardware)	15,000.00	2,500.00
Phone Line (Anchorage-Valdez)	1,000.00/mo	-
Shipboard Terminal		
Modifications, Developmental (LORAN Interface/Software)	13,000.00	13,000.00
Transceiver	5,000.00	5,000.00
Alphanumeric Terminal (optional)	1,500.00	1,500.00
LORAN C Interface	200.00/each	200.00/each
M.B. Antennas	500.00	500.00
LORAN Receiver	GFE	GFE
LORAN Antenna	GFE	GFE
Installation and C/O		
3 man weeks of support	6,500.00	6,500.00
VTC Terminal	1,500.00 (GFE)	1,500.00 (GFE)
Additional Test Support	2,300.00/week	2,300.00/week

TABLE E-2. COST SUMMARY

	Surveys, Development & Modifications	Installation 3 man weeks (Travel costs included)	Phone Line Cost/Month	Cost for 2 Shipboard Terminals*	Cost for 5 Shipboard Terminals	VTC Terminal
Using AMBCS	$ 30,000.00	$ 6,500.00	$ 1,000.00	$ 11,400.00	$ 28,500.00	$ 1,500.00
Using Mobile MBCS	17,500.00	6,500.00	-	1,400.00**	18,500.00	1,500.00

* Excludes alphanumeric terminal
** Two transceivers are a part of the Mobile MBCS.

APPENDIX F

REPORT OF NEW TECHNOLOGY

The work performed under this contract, while leading to no new invention, has determined the feasibility of utilizing meteor burst communications for monitoring vessel position at the Valdez, AK, Vessel Traffic Center. Communication link capacity, antenna siting, and equipment specifications were considered in developing alternative systems meeting Coast Guard Requirements.