U.S. ARMY
MATERIEL DEVELOPMENT AND READINESS COMMAND

(12)

A091742

LEVEL III

MANUFACTURING METHODS & TECHNOLOGY

AD A098415

DTIC
ELECTE
MAY 4 1981
S D
A

PROJECT EXECUTION REPORT

This document has been approved for public release and sale; its distribution is unlimited.

SECOND CY 80

DTIC FILE COPY

PREPARED BY

MARCH 1981

USA INDUSTRIAL BASE ENGINEERING ACTIVITY

MANUFACTURING TECHNOLOGY DIVISION

ROCK ISLAND, ILLINOIS 61299

81 5 01 005

UNCLASSIFIED

SECURITY CLASSIFICATION OF THIS PAGE (When Data Entered)

REPORT DOCUMENTATION PAGE		READ INSTRUCTIONS BEFORE COMPLETING FORM
1. REPORT NUMBER SECOND CY80	2. GOVT ACCESSION NO. AD-A098 415	3. RECIPIENT'S CATALOG NUMBER
4. TITLE (and Subtitle) MANUFACTURING METHODS & TECHNOLOGY PROJECT EXECUTION REPORT, Half CY. 80.		5. TYPE OF REPORT & PERIOD COVERED Semiannual 1 Jul 80 – 31 Dec 80
		6. PERFORMING ORG. REPORT NUMBER
7. AUTHOR(s) Ms. L. S. Hancock		8. CONTRACT OR GRANT NUMBER(s) N/A
9. PERFORMING ORGANIZATION NAME AND ADDRESS US Army Industrial Base Engineering Activity ATTN: DRXIB-MT Rock Island, IL 61299		10. PROGRAM ELEMENT, PROJECT, TASK AREA & WORK UNIT NUMBERS N/A 1X1165
11. CONTROLLING OFFICE NAME AND ADDRESS US Army Industrial Base Engineering Activity ATTN: DRXIB-MT Rock Island, IL 61299		12. REPORT DATE March 1981
		13. NUMBER OF PAGES 181
14. MONITORING AGENCY NAME & ADDRESS (if different from Controlling Office) US Army Materiel Development & Readiness Command ATTN: DRCMT, Office of Manufacturing Technology 5001 Eisenhower Avenue Alexandria, VA 22333		15. SECURITY CLASS. (of this report) UNCLASSIFIED
		15a. DECLASSIFICATION/DOWNGRADING SCHEDULE N/A

16. DISTRIBUTION STATEMENT (of this Report)

DISTRIBUTION UNLIMITED

17. DISTRIBUTION STATEMENT (of the abstract entered in Block 20, if different from Report)

DISTRIBUTION UNLIMITED

18. SUPPLEMENTARY NOTES

N/A

19. KEY WORDS (Continue on reverse side if necessary and identify by block number)

Manufacturing Methods & Technology
MMT

20. ABSTRACT (Continue on reverse side if necessary and identify by block number)

This document is a summary compilation of the Manufacturing Methods and Technology Program Project Status Reports (RCS DRCMT-301) submitted to IBEA from DARCOM major Army subcommands and project managers. Each page of the computerized section lists project number, title, status, funding, and projected completion date. Summary pages give information relating to the overall DARCOM program.

DD FORM 1 JAN 73 1473 EDITION OF 1 NOV 65 IS OBSOLETE

UNCLASSIFIED 410713

SECURITY CLASSIFICATION OF THIS PAGE (When Data Entered)

DEPARTMENT OF THE ARMY
US ARMY INDUSTRIAL BASE ENGINEERING ACTIVITY
ROCK ISLAND, ILLINOIS 61299

19 MAR 1981

DRXIB-MT

SUBJECT: Manufacturing Methods and Technology (MMT) Program Project Execution Report, Second Half CY80

SEE DISTRIBUTION

1. Reference AR 700-90, C1, paragraph 3-8e(1), 10 Mar 77, subject: Logistics, Army Industrial Preparedness Program.

2. The Project Execution Report is a summary compilation of the MMT Program Project Status Reports (RCS DRCMT-301) submitted to IBEA from DARCOM major Army subcommands (SUBMACOM) and project managers. This document is used as a management tool for monitoring the progress of MMT projects. There are separate sections in the report showing projects that are new, active, and completed. Also, included is a discussion of the overall DARCOM Program.

3. Persons who are interested in the details of an individual project should contact the manufacturing technology represenative at the SUBMACOM. A list of those representatives is included in Appendix IV to this report. The Project Officer for this task is Ms. L. Hancock, AV 793-6521.

J.R. GALLAUGHER
Director
Industrial Base Engineering Activity

Accession For
NTIS GRA&I ☒
DTIC TAB ☐
Unannounced ☐
Justification
Distribution/
Availability Codes
A

TABLE OF CONTENTS

	Page
INTRODUCTION	1
DISCUSSION	3
PROJECTS ADDED 2nd HALF, CY80	13
PROJECTS COMPLETED 2nd HALF, CY80	27
SUMMARY PROJECT STATUS REPORTS	55
Test and Evaluation Command	57
Aviation R&D Command	63
Missile Command	73
Armament R&D Command Armament Materiel Readiness Command (Ammunition)	83
Armament R&D Command Armament Materiel Readiness Command (Weapons)	105
Mobility Equipment R&D Command	115
Communications R&D Command	119
Electronics R&D Command	123
Materiel Development & Readiness Command Army Material and Mechanics Research Center Army Depot Systems Command	131
Natick R&D Command	147
Tank-Automotive Command	151
APPENDICES	157
I - Command Identification	159
II - Project Slippage Study	163
III - User's Guide	167
IV - Army MMT Program Representatives	171
DISTRIBUTION	177

INTRODUCTION

BACKGROUND

The Army Manufacturing Methods and Technology (MMT) Program was established in 1964 as a part of the Army Production Base Support (PBS) Program. The MMT Program has goals of improving existing manufacturing technology, translating new technology into production line processes, and supporting the modernization and expansion of the military hardware production base. The program is governed by the provisions of AR 700-90, Chapter 3, which has been recently updated and submitted to the field in its draft form.

COMPOSITION OF THE REPORT

This MMT Project Execution Report provides the status summaries of 473 active projects which have a total authorized cost of $214,491,000. Total MMT program statistics, as well as the summaries of the active projects are also included. The report is compiled, edited, and published for HQ, DARCOM by the Manufacturing Technology Division of the Army Industrial Base Engineering Activity (IBEA) in accordance with AR 700-90, C1, paragraph 3-8e(1).

Distribution of this report is extended to Army materiel developers and users and to counterparts in the Navy and the Air Force. Inquiries on the detailed technical aspects of any individual project may be answered by the MMT Program representative of the action command under which the project was completed or is being executed. Inquiries or suggestions concerning this report or other facets of the MMT Program may also be directed to the Manufacturing Technology Division of IBEA.

The report is composed of three major sections:

a. Projects Added 2nd Half, CY80 - A list divided by organization of all projects funded during the second half of CY80. Included is a narrative of the problem for each project.

b. Projects Completed 2nd Half, CY80 - A list divided by organization of all projects completed during the second half of CY80. Included is a narrative of the final status for each project.

c. Summary Project Status Report - These reports are divided by organization and include a summary of funding by fiscal year and a narrative status for each project.

DISCUSSION

Manufacturing Methods and Technology (MMT) Projects and Efforts are major elements of the Army's Manufacturing Technology (MANTECH) Program. AR 700-90 succinctly describes the MANTECH objective as the improvement of the industrial readiness and efficiency of the production base for Army materiel. Further defined objectives are stated in the Statement of Principles for the DOD Manufacturing Technology Program. This Statement, originating at the Deputy Under Secretary of Defense level, not only establishes ground rules for the Program but highlights the level of emphasis that the Program receives.

To attain the objectives described in the Statement of Principles, the Army funds discrete work units, called Projects, on a yearly basis. These projects, identified by a seven-digit number, contain work requests, which upon completion will result in an end product whose technical transfer can be effected. At times, in order to have a total work package which is implementable, (i.e., which can achieve the payback for which the work was funded) the scope can be of such a magnitude that total funding in one fiscal year can be an inefficient use of resources. In this event, the total work might be multi-year funded, (i.e., be more than one project, each having a technically transferrable end product). These total implementable work units are called "Efforts". These Efforts can consist of many projects or just be one project, depending on the amount of work required to achieve the implementable technical goal. Efforts are identified by a four-digit number which is the same as the last four digits of a project or projects which make up the effort.

The following three charts (Figures 1-3) summarize MMT project reporting and funding status for the 2nd Half of CY80. These summaries include data from the Major Army subcommands (SUBMACOM) that have active projects and the AMMRC and DARCOM sponsored projects. Cumulative figures pertaining to project distribution and expenditures of funds on contract and in-house are provided. Completed projects are not included in this section. They are listed in a separate section on page 27 which gives a final work status for each project that was completed during this reporting period.

A summary of the MMT program (Figure 1) indicates that the number of active projects has decreased by 27% in comparison with the 2nd half of CY79. The comparison is made between parallel reporting periods (2nd half, CY79 and 2nd half, CY80) in order to observe the project number and funding changes that occur within each command and within the total program. The data on this chart shows projects that were active for the period July through December 1980. It can be noted that there was a decrease in number of projects and authorized funds within every command except AMMRC/DARCOM/DESCOM. This decrease reflects a decline in funding levels and points out continuing success in the close-out of old projects. Another cause for the decrease was

PRECEDING PAGE BLANK-NOT FILMED

the late funding of the FY81 program. Many of the newly added projects were not funded until after December 1980 whereas during the previous year (2nd half CY79) much of the new program had been funded

MMT PROGRAM SUMMARY

Organization	Number of Projects			Funding Status		Percent Change
	2nd Half CY79	2nd Half CY80	Percent Change	2nd Half CY79	2nd Half CY80	
TECOM	4	3	-25	3,267,400	2,553,000	-22
AVRADCOM	93	72	-23	25,216,600	23,263,300	-8
MICOM	74	62	-16	28,979,300	21,680,600	-25
ARRADCOM/ARRCOM (Ammo)	229	152	-34	133,051,800	86,698,400	-35
ARRADCOM/ARRCOM (Weapons)	96	64	-33	17,335,600	12,962,500	-25
MERADOM	21	15	-29	6,353,000	4,120,000	-35
CORDACOM	10	8	-20	4,443,600	4,185,000	-6
ERADCOM	48	41	-15	28,148,100	25,905,200	-8
DARCOM/AMMRC/ DESCOM	13	13	0	20,671,900	16,941,900	-18
NARADCOM	5	4	-20	1,506,600	637,100	-58
TACOM	53	39	-26	17,218,000	15,544,400	-10
TOTAL	646	473	-27	286,191,900	214,491,400	-25

Figure 1

by the end of December. Numerically, the largest decreases were in Ammunition and Weapons. ARRADCOM/ARRCOM (Ammunition) reflect the largest decrease in active funding level with reduction in authorized funds of $46.4 million.

PRECEDING PAGE BLANK-NOT FILMED

A breakout of the active projects by fiscal years is shown in Figure 2. An increased emphasis has been placed during the past year on closing out older projects. The success of this close-out is shown by comparing the fiscal years 73-7T of the 2nd half CY79 with the current

ACTIVE PROJECTS BY FISCAL YEAR

Organization	73	74	75	76	7T	77	78	79	80	81	TOTAL
TECOM								1	1	1	3
AVRADCOM						2	5	13	25	27	72
MICOM				1		2	12	19	23	5	62
ARRADCOM/ARRCOM (Ammo)			1	8	1	10	23	51	50	8	152
ARRADCOM/ARRCOM (Weapons)			1	1		7	7	17	31		64
MERADCOM						1	1	5	5	3	15
CORADCOM				1			1	2	2	2	8
ERADCOM				2		10	5	10	12	2	41
DARCOM/AMMRC DESCOM					1	1	2	3	4	2	13
NARADCOM						1		1	2		4
TACOM					1		5	10	11	12	39
TOTAL	0	0	2	13	3	34	61	132	166	62	473
2nd CY79 TOTAL	1	5	15	40	6	86	141	181	171	0	646

Figure 2

period. A year ago there were 67 active projects for these fiscal years. There were only 18 active projects (73-7T) during the 2nd half CY80. The total span of the active MMT program is now seven years.

PRECEDING PAGE BLANK-NOT FILMED

Also, there was a total of 118 projects completed overall during the current reporting period. This is the largest number of projects completed during a six-month period within the last two years. Figure 3

PROGRAM FUNDING EXPENDITURES

(MILLIONS)

Organization	Projects	Authorized Funding	Contractor Amount	Contractor Expended	In-House Remaining	In-House Expended
TECOM	3	$ 2.6	$ 0.2	$*0.2 (88%)	$ 2.4	$ 1.4 (60%)
AVRADCOM	72	23.3	11.3	6.5 (57%)	11.9	1.5 (12%)
MICOM	62	21.7	12.0	8.6 (71%)	9.7	2.8 (28%)
ARRADCOM/ARRCOM (Ammo)	152	86.7	48.8	25.1 (51%)	37.9	22.4 (59%)
ARRADCOM/ARRCOM (Weapons)	64	13.0	4.1	1.8 (43%)	8.9	3.3 (37%)
MERADCOM	15	4.1	3.2	1.8 (56%)	0.9	0.2 (23%)
CORADCOM	8	4.2	2.1	1.1 (51%)	2.1	0.2 (8%)
ERADCOM	41	25.9	18.7	11.2 (60%)	7.2	1.6 (22%)
DARCOM/AMMRC DESCOM	13	16.9	7.7	3.4 (44%)	9.3	8.8 (94%)
NARADCOM	4	0.6	0.5	0.3 (67%)	0.1	*0.1 (43%)
TACOM	39	15.5	7.7	4.1 (53%)	7.9	1.2 (15%)
TOTAL	473	$214.5	$116.3	$64.1 (55%)	$98.3	$43.5 (44%)
2nd CY79 TOTAL	646	$286.2	$120.8	$70.0 (58%)	$165.3	$55.2 (33%)

Figure 3

*All values rounded to one decimal place.

indicates at what rate the project funds are being expended. The percent of in-house expenditures has increased by 11% from the 2nd

PRECEDING PAGE BLANK-NOT FILMED

half CY79 and the percent of contract expenditures has remained about the same. This would seem to indicate that in-house funds are being expended at a greater rate than in the past. While this is true to a degree, other factors have also resulted in this apparent program improvement. As stated earlier, the late funding of the new FY81 program caused a decrease in funding level through December 1980. This explains part of the significant difference between in-house funds from the 2nd half CY79 ($165.3 million) and the 2nd half CY80 ($98.3 million). The 2nd half CY79 period which included more new projects, would thus have more funds remaining in-house. This then would result in a smaller expenditure rate than the current period.

Accuracy of project information depends on the quality of the project status reports submitted to IBEA from the commands. Efforts were again made this period to improve the quality of individual reports. Any report containing significant errors or inadequate description of accomplishments was sent back to the command for correction.

Accuracy also depends on a complete submission of all the project status reports for each command. In December, a call letter was mailed out to each SUBMACOM. Inclosed with this letter was a computerized listing of the projects for which a status report was required for this reporting period. There were 30 reports, which five weeks after the due date, were not submitted. This is reduction of eight reports compared to the last report period. This is significant because the cutoff date was moved up a week and yet the number of delinquent status reports was reduced. The following list shows the number of delinquent reports within each command.

TECOM	0
AVRADCOM	4
MICOM	20
ARRADCOM/ARRCOM (AMMO)	3
ARRADCOM/ARRCOM (WPNS)	2
MERADCOM	0
CORADCOM	0
ERADCOM	0
DARCOM	0
AMMRC/	0
DESCOM	0
NARADCOM	0
TACOM	1

This delinquency creates a void in the information presented in the compiled report. Continuing improvement in this area will insure a more useful review of the progression of the MMT Program.

PRECEDING PAGE BLANK-NOT FILMED

MMT PROGRAM

PROJECTS ADDED 2nd HALF, CY80

PRECEDING PAGE BLANK-NOT FILMED

PROJECTS ADDED IN 2ND HALF, CY80

DARCOM

D 81 5053
DIGITAL ELEVATION DATA DUBBING FACILITY (DEDDF)

TECHNOLOGY EXISTS TO TRANSFER FORMATTED DIGITAL ELEVATION DATA (FOR MAPS) FROM 9-TRACK COMMERCIAL TAPES TO CASETTES COMPATIBLE WITH THE FIREFINDER SYSTEM. HOWEVER THIS TECH HAS NOT BEEN INTEGRAGED INTO VAN-MOUNTED PORTABLE FIELD FACILITIES.

MERADCOM

E 81 3717
HIGH TEMPERATURE TURBINE NOZZLE FOR 10KW PU

SUPER ALLOY METALS USED IN HOT COMPONENTS OF GAS TURBINES ARE LIMITED IN OPERATING TEMPERATURE AND ARE SUBJECT TO PREMATURE FAILURE IN DUSTY OR CORROSIVE ATMOSPHERE. ALLOY METALS ARE STRATEGIC MATERIALS AND ARE COSTLY TO MANUFACTURE.

E 81 3747
LACV-30, SKIRT + FINGER COMPONENTS

FABRICATION OF SKIRT, FINGERS AND CONES IS CURRENTLY HIGHLY LABOR INTENSIVE, LEADING TO HIGH COMPONENT REPLACEMENT COSTS.

E 81 3759
KEVLAR CABLE REINF FOR MILITARY BRIDGES

TO PROVIDE LIGHT WEIGHT REINFORCEMENT TENSION MEMBER HAVING HIGH TENSILE PROPERTIES AND MODULUS.

CORADCOM

F 81 3036
CAD/CAM OF SPECIAL ELECTRONIC CIRCUITS (CAM)

SEMICONDUCTOR INTEGRATED CIRCUITS NEEDED FOR SPECIAL COMMUNICATIONS EQUIP. MUST BE CUSTOM DESIGNED FOR EACH NEW APPLICATION. EACH IC REQUIRES SEVERAL MASK SETS AND A NUMBER OF IC ARE REQUIRED FOR EACH DEVICE. CONSIDERABLE ARTWORK IS REQUIRED.

PRECEDING PAGE BLANK-NOT FILMED

PROJECTS ADDED IN 2ND HALF, CY80
(CONTINUED)

F 81 3056
ELECTROLUMINESCENT NUMERIC MODULES

HIGH CONTRAST NUMERIC READOUTS ARE REQUIRED FOR SUNLIGHT LEGIBILITY AND FULL ENVIRONMENTAL OPERATION IN TACTICAL EQUIP. ELECTROLUMINESCENT MODULES NEEDED TO FULFILL THIS REQUIREMENT ARE AVAILABLE ONLY AS SMALL QTY, HIGH COST, LAB BUILT SAMPLES.

ERADCOM

H 81 3031
10.6 UM CO-2 TEA LASERS

LASERS CONSTRUCTED IN UNIT QUANTITIES ARE EXPENSIVE AND VARY IN SPECIFICATIONS. PRESENT RANGE FINDER LASERS HAVE REDUCED ALL WEATHER CAPABILITIES AND ARE INEFFECTIVE AGAINST COUNTERMEASURE SMOKES.

H 81 5110
COMMON MODULE DETECTOR ARRAYS

MERCURY-CADMIUM TELLURIDE DETECTOR ARRAYS ARE NOW HAND LAPPED AND POLISHED. CONTACT MASKING IS USED FOR PHOTOLITHOGRAPHY AND WET ETCHING FOR DELINEATION. ALSO, GOLD WIRING IS USED FOR LEADOUTS. THESE ARE LABOR INTENSIVE AND NON-UNIFORM.

AMMRC

M 81 6390
MMT PROGRAM IMPLEMENTATION AND INFORMATION TRANSFER

THE SUCCESS OF THE MMT PROGRAM IS VERY DEPENDENT ON WHETHER THE RESULTS OF MMT WORK GET IMPLEMENTED. THIS IN TURN IS DEPENDENT ON WHETHER INFORMATION CONCERNING THE MMT TECHNOLOGY IS MADE AVAILABLE AND USED BY CONCERNED PARTIES.

NARADCOM

Q 80 8063
IMPROVED METHODS OF MFG OF BUTYL RUBBER HANDWEAR

THE PRESENT METHOD OF STANDARD BUTYL RUBBER GLOVE FOR OW PROTECTION IS BY A SOLE SOURCE DIPPING PROCESS WHICH REQUIRES CLOSE QUALITY AND ENVIRONMENTAL SUPERVISION INCREASED COST AND LIMITED DURABILITY AND PROTECTION.

PROJECTS ADDED IN 2ND HALF, CY80
(CONTINUED)

Q 80 8066
CONTINUOUS FILAMENT HELMET PREFORM

CONVENTIONAL MODE OF MOLDING THE PASGT HELMENT I.E. WEAVING KEVLAR YARNS INTO FABRIC CUTTING PREFORM AND LAYING UP, IS VERY WASTEFUL.

TACOM

T 80 4392
JOINING DISSIMILAR METALS

CURRENT ARMOR DESIGNS ONLY EMPLOY ONE TYPE OF METAL FOR WELDING.

T 81 5014
IMPROVED FOUNDRY CASTINGS UTILIZING CAM

FOUNDRY CASTING PROCESSES ARE WASTEFUL OF RAW MATERIALS AND ENERGY.

T 81 5054
LASER SURFACE HARDENED COMBAT VEHICLE COMPONENTS

PRESENT METHODS OF SURFACE HARDENING INPUTS HEAT OVER LARGE SURFACE AREA.

T 80 5062
ARMORED VEHICLE VISION BLOCKS

FABRICATE AN ECONMICALLY IMPROVED BALLISTIC VISION DEVICE.

T 81 5068
NEW ANTI-CORROSIVE MATERIALS AND TECHNIQUES (PHASE II)

METALLIC COMPONENTS ARE DETERIORATED BY THE ENVIRONMENT.

T 81 5075
MILITARY ELASTOMERS FOR TRACK VEHICLES (PHASE II)

TRACK LIFE IS HELD AT ITS PRESENT LEVEL BY FAILURE OF RUBBER COMPONENTS SUCH AS BUSHINGS, PADS AND BLOCKS.

T 81 5082
FLEXIBLE MACHINING SYS (FMS) PILOT LINE F/TCV COMPONENTS

PARTS FOR TRACKED COMBAT VEHICLES ARE TYPICALLY NOT MANUFACTURED IN LARGE QUANTITIES. BECAUSE OF THIS, MASS PDN TECHNOLOGIES THAT RESULT IN LOWER PDN COSTS ARE NOT USED.

PROJECTS ADDED IN 2ND HALF, CY80
(CONTINUED)

T 81 5090
IMPROVED AND COST EFFECTIVE MACHINING TECHNOLOGY (PHASE III)

MACHINE DATA ON NEWER MATERIALS AND NEW REMOVAL RATES ARE NOT ESTABLISHED.

T 81 5097
INTEGRALLY CAST LOW COST COMPRESSOR (PHASE III)

TURBINE BLADES AND DISCS MUST HAVE ADEQUATE LOW AND HIGH CYCLE FATIGUE PROPERTIES. AXIAL COMPRESSOR STAGES ARE DESIGNED AS SEPARATELY BLADED ASSEMBLIES.

T 81 6011
SPRINGS FROM FIBER/PLASTIC COMPOSITES

STEEL SPRINGS FOR TACTICAL VEHICLES ARE HEAVY AND SUBJECT TO FAILURE FROM FATIGUE. CARBON FIBER COMPOSITES ARE LIGHTER AND HAVE EXCELLENT FATIGUE RESISTANCE.

T 81 6053
WELDING SYSTEMS INTEGRATION

OF ALL METAL WORKING PROCESSES EMPLOYED IN TRACKED COMBAT VEHICLES MANUFACTURING, WELDING IS THE MOST LABOR INTENSIVE AND AFTER MACHINING, THE MOST COSTLY. AUTOMATION WHICH COULD REDUCE THESE COSTS IS AS YET AN UNACHIEVED GOAL.

T 81 6054
ADVANCED METROLOGY SYSTEMS INTEGRATION

THE METROLOGY METHODS USED IN MILITARY VEHICLE MANUFACTURE, IN GENERAL, EMPLOYS CONTACT GAUGES MANUALLY EMPLOYED. THIS REPRESENTS A SUBSTANTIAL PART OF THE COST OF OUR MILITARY VEHICLES.

T 81 6057
XM1 COMBAT VEHICLE

MATERIALS AND MANUFACTURING PROCESSES EMPLOYED IN THE MFG OF THE XM1 CAN BE IMPROVED BY INCORPORATING NEW TECHNOLOGIES TO THE CURRENT SYSTEM. THIS WILL ENABLE THE XM1 TO BE MANUFACTURED MORE ECONOMICALLY.

T 81 6076
AUTOMATED DEPOT INSPECTION OF ROADWHEELS

PROJECTS ADDED IN 2ND HALF, CY80
(CONTINUED)

TECOM

0 81 5071
PRODUCTION TEST METHODOLOGY ENGINEERING MEASURES

ARTILLERY,VEHICLE AND ELECTRONIC CONVENTIONAL TEST CAPABILITIES NEED TO BE UPGRADED TO PROVIDE MORE TIMELY ACCURATE TEST DATA FOR THE TEST AND EVALUATION PROCESS.

AVRADCOM

1 81 7036
ISOTHERMAL ROLL-FORGING COMPRESSOR BLADES

TECHNOLOGY FOR FABRICATING ADVANCED ENGINE MATERIALS INTO COMPRESSOR BLADE CONFIGURATIONS IS EITHER UNAVAILABLE OR EXCESSIVE IN COST.

1 81 7108
MANUFACTURING TECHNIQUES F/TRANSMISSION SHAFT SEALS

CURRENT HELICOPTER TRANSMISSION SEALS ARE SUSCEPTABLE TO WEAR AND THERMAL DEGRADATION RESULTING IN LEAKAGE OF TRANSMISSION OIL AND FREQUENT SEAL REPLACEMENT.

1 81 7113
COMPOSITE REAR FUSELAGE MANUFACTURING TECHNOLOGY

APPLICATION OF COMPOSITE MATERIALS TO AIRFRAME FUSELAGE COMPONENTS POSSESSES A LARGE POTENTIAL FOR COST AND WEIGHT SAVINGS. HOWEVER, PRODUCTION MANUFACTURING PROCESSES HAVE NOT BEEN ESTABLISHED FOR LARGE, FULL-SCALE, COMPOUND CURVATURE, COMPONENTS.

1 81 7143
CERAMIC GAS PATH SEAL-HIGH PRESSURE TURBINE

METALLIC SYSTEMS CURRENTLY USED IN HIGH PRESSURE TURBINE SEALS DEGRADE DUE TO EROSION, CORROSION, AND ADVERSE RUB BEHAVIOR RESULTING IN INCREASED CLEARANCES OVER THE TURBINE BLADE TIPS AND LOSS OF ENGINE PERFORMANCE.

1 81 7155
COST EFFECTIVE MANUF METH F/IMPVD HIGH PERF HELICOPTER GEARS

DEMAND IN HELICOPTER OPERATION OF GREATER RELIABILITY OF HIGH PERFORMANCE GEARS AT LOWER COST HAS REQUIRED THAT IMPROVED PROCESSING AND EVALUATION TECHNIQUES BE INSTITUTED.

PROJECTS ADDED IN 2ND HALF, CY80
(CONTINUED)

1 81 7183
SEMI-AUTO COMP MANUF SYS F/HELI FUSELAGE SECONDARY STRUC

HELICOPTER FUSELAGE STRUCTURES HAVE HIGH MANUFACTURING COST DUE TO HIGH PART COUNT AND HIGH ASSEMBLY COSTS. METHODS OF COMPOSITE FABRICATION HAVE BEEN INVESTIGATED BUT HAND OPERATIONS RESULT IN HIGH LABOR COSTS.

1 81 7197
FABRICATION OF INTEGRAL ROTORS BY JOINING

CURRENT GAS TURBINE ROTORS ARE EITHER INTEGRALLY CAST OR THE BLADES AND DISKS ARE SEPARATE UNITS. THE BLISK CONCEPT DOES NOT PERMIT OPTIMUM MECHANICAL PROPERTIES OF THE UNIT AND THE OTHER METHOD REQUIRES COMPLEX AND EXPENSIVE MACHINING.

1 81 7200
COMPOSITE ENGINE INLET PARTICLE SEPARATOR

CURRENTLY, FABRICATION OF THE T700 INLET PARTICLE SEPARATOR (IPS) INVOLVES MACHINING OF CASTINGS AND FORGINGS AND THE JOINING OF THESE PARTS BY WELDING AND BRAZING. THIS IS COSTLY IN TERMS OF BOTH MATERIAL AND LABOR.

1 81 7202
APPLICATION OF THERMOPLASTICS TO HELICOPTER SECONDARY STRUC

FORMING FIBER REINFORCED THERMOPLASTIC COMPONENTS INTO COMPLEX, MULTI-CURVED STRUCTURAL CONFIGURATIONS, WITH UNIFORM FIBER DISTRIBUTION, MINIMUM WARPAGE, AND ACCEPTABLE DIMENSIONAL TOLERANCES HAS NOT BEEN ESTABLISHED FOR AIRCRAFT COMPONENTS.

1 81 7285
CAST TITANIUM COMPRESSOR IMPELLERS

CURRENT CENTRIUGAL COMPRESSOR IMPELLERS ARE FABRICATED BY MACHINING THE FLOWPATH AND BLADE SURFACES FROM A FORGING. THIS RESULTS IN A SUBSTANTIAL LOSS OF MATERIAL AND EXPENSIVE MACHINING OPERATIONS.

1 81 7288
MMT DETERMINATION OF OPTIMAL CURING CONDITIONS

CURRENT METHODS OF CURING COMPOSITES ARE BASED ON EMPIRICAL DETERMINATION OF REQUIRED PROCESSING CONDITIONS. A TRIAL AND ERROR PROCEDURE IS FOLLOWED UNTIL THE MANUFACTURER IS REASONABLY SATISFIED WITH MECHANICAL PROPERTIES.

PROJECTS ADDED IN 2ND HALF, CY80
(CONTINUED)

1 81 7291
TITANIUM POWDER METAL COMPRESSOR IMPELLER

WHEN COMPLEX CONFIGURATIONS, SUCH AS CENTRIFUGAL IMPELLERS AND COMPRESSOR ROTORS ARE UTILIZED IN GAS TURBINE ENGINES, TYPICALLY HIGH MANUFACTURING COST ARE ENCOUNTERED.

1 81 7298
HIGH TEMPERATURE VACUUM CARBURIZING

GEAR CARBURIZING IS PRESENTLY CARRIED OUT WITH A RELATIVELY SLOW ENDOTHERMIC PROCESS, TYPICALLY AT 1700 DEG F, WHICH REQUIRES SURFACE PROTECTION AGAINST DECARBURIZING DURING THE CYCLE OR A POST HEAT TREAT REMOVAL OF THE DECARBURIZED LAYER.

1 81 7300
IMPROVED LOW CYCLE FATIGUE CAST ROTORS

INTEGRALLY CAST TURBINE ENGINE ROTORS HAVE BEEN SHOWN TO BE COST EFFECTIVE. HOWEVER, INVESTMENT CASTING RESULTS IN LARGE GRAIN SIZES IN THE DISK REGION AND THIS REDUCES FATIGUE LIFE COMPARED TO WROUGHT MATERIAL.

1 81 7302
PRODUCTION OF BORIDE COATED LONG LIFE TOOLS

AIRFRAME COMPONENTS AND PRINTED CIRCUIT BOARDS OF FIBERGLASS AND OTHER COMPOSITES ARE DIFFICULT TO MACHINE. TOOL LIFE IS 5-10 PCT COMPARED TO USE ON TITANIUM WORKPIECES. TITANIUM DIBORIDE (TIB2) COATED TOOLS ARE BETTER BUT NOT ECONOMICAL.

1 81 7319
PROD METH F/DIGITAL ADDRESSABLE MULTI-LEGEND DISPLAY SWITCH

EXPERIMENTAL VERSIONS ARE EXPENSIVE AND DIFFICULT TO MANUFACTURE BECAUSE THE MOUNTING OF THE COMMERCIALLY AVAILABLE ELECTRONICS DISPLAY CHIPS AND SWITCHES MUST BE DONE BY HAND TO OBTAIN PROPER RUGGEDNESS AND OPERATION OF THE STRUCTURE.

1 81 7322
LOW COST TRANSPIRATION-COOLED COMBUSTOR LINER

COMBUSTOR LINERS OF ADVANCED GAS TURBINE ENGINES ARE REQUIRED TO SURVIVE USING LESS COOLING AIRFLOW THAN HERETOFORE AVAILABLE. STATE OF THE ART TRANSPIRATION COOLED LINERS CAN MEET THE REQUIREMENTS BUT MANUFACTURING PROCESSES ARE NOT COST EFFECTIVE.

PROJECTS ADDED IN 2ND HALF, CY80
(CONTINUED)

1 81 7338
COMPOSITE TAIL SECTION

THE POTENTIAL COST AND WEIGHT ADVANTAGES OF COMPOSITES FOR AIRFRAME COMPONENTS HAVE NOT BEEN FULLY DEMONSTRATED DUE TO FABRICATION LIMITATIONS RELATED TO CONFIGURATION RESTRAINTS, FOR EXAMPLE, IN-PLACE WINDING, COMPLEX CONTOURS, AND CO-CURING.

1 81 7339
FILAMENT WOUND COMPOSITE FLEXBEAM TAIL ROTOR

FILAMENT WINDING FROM A SOLID FLEXBEAM TO AN OPEN SPAR SECTION, WINDING TO NET SHAPE, IMPROVED RESIN CONTROL AND TOLERANCE CONTROL MUST BE OBTAINED TO ENHANCE THE COST EFFECTIVENESS OF FLEXBEAM TAIL ROTERS.

1 81 7340
COMPOSITE MAIN ROTOR BLADE

CURRENT PRODUCTION COMPOSITE BLADE PROGRAMS HAVE NOT BEEN ORIENTED TOWARD OPTIMIZING MANUFACTURING TECHNIQUES/PROCESSES RELATED TO BLADE CONFIGURATIONS,FABRICATION METHODS,AND IMPROVED STRUCTURAL RELIABILITY.

1 81 7341
STRUCTURAL COMPOSITES FABRICATION GUIDE

THE NEED EXISTS TO DOCUMENT INDUSTRY EXPERIENCE IN COMPOSITES SO THAT COST AND MANUFACTURING COMPARISONS CAN BE MADE.

1 81 7342
PULTRUSION OF HONEYCOMB SANDWICH STRUCTURES

FABRICATION OF HONEYCOMB SANDWICH PANELS IS LABOR INTENSIVE AND FACE-TO-CORE BONDING OFTEN TAKES TWO CURE OPERATIONS. PULTRUSION CAN BE USED FOR CONTINUOUS PRODUCTION BUT COMMERCIAL PARAMETERS AND TOOLING ARE NOT SUITABLE FOR MILITARY USE.

1 81 7345
IN PROCESS CONTROL OF RESIN MATRIX CURE

CONVENTIONAL CONTROL OF THE CURE STAGE DURING COMPOSITE HARDWARE MANUFACTURING IS ATTAINED THROUGH MANUAL OR AUTOMATIC CONTROL OF THE AUTOCLAVE/PRESS TEMPERATURE AS A FUNCTION OF TIME. THIS METHOD IGNORES THE CHEMICAL STATE OF THE RESIN DURING CURE.

PROJECTS ADDED IN 2ND HALF, CY80
(CONTINUED)

1 81 7351
COMPOSITE SHAFTING FOR TURBINE ENGINES

CURRENT MATERIAL CAPABILITIES ASSOCIATED WITH HIGH SPEED GAS TURBINE ENGINE SHAFTING REQUIRE EXCESS BEARINGS AND CAREFUL DESIGN REGARDING SHAFT DYNAMICS.

1 81 7354
INTEGRALLY STIFFENED HELICOPTER TRANSMISSION CASE

THE LOW STIFFNESS OF THE CURRENT CH-47 CAST MAGNESIUM ALLOY TRANSMISSION CASE CAUSES EXCESSIVE GEAR WEAR, EXCESSIVE NOISE AND EXCESSIVE VIBRATION.

1 80 7370
RING WRAP COMPOSITES

LARGE IRREGULAR SHAPED OR LONG AIRFOIL PROFILES PRESENT SPECIAL PROBLEMS WHEN ATTEMPTS ARE MADE TO FILAMENT WIND THESE CONFIGURATIONS.

1 81 7371
INTEGRATED BLADE INSPECTION SYSTEM (IBIS)

INSPECTION OF TURBINE ENGINE BLADES AND VANES NECESSITATES HIGH ACCURACY. THE EFFORT IS TIME CONSUMING AND SUSCEPTABLE TO ERROR.

1 81 7376
AUTO INSPECT AND PRECISION GRINDING OF SB GEARS

CURRENT MFG METHOD FOR SPIRAL BEVEL GEARS IS LABOR INTENSIVE, REQUIRING CONTACT PATTERN CHECKS WITH EXPENSIVE MASTER MATING GEARS. THIS PATTERN SHIFTS WITH A CHANGE IN TORQUE AND TEMPERATURE. AS A RESULT THE CURRENT TOOTH FORM EXPERIENCES GREAT STRES

1 80 7412
INFRARED DETECTOR FOR LASER WARNING RECEIVER

SUPPLY OF GALLIUM ARSENIDE ETALONS FOR USE AS IR DETECTORS IS LIMITED. METHODS FOR DIFFUSING THE DETECTOR JUNCTION, FOR SURFACE PASSIVATION, FOR BONDING THE INTERDIGITATED ETALON TO THE INTERDIGITATED DETECTOR ARE LARGELY HAND METHODS.

PROJECTS ADDED IN 2ND HALF, CY80
(CONTINUED)

MICOM

3 81 1021
CPPP MACHINED CYLINDRICAL PARTS (CAM)

PRESENT MANUAL METHOD FOR PRODUCTION PROCESS PLANNING OF MACHINED CYLINDRICAL METAL COMPONENTS ARE INADEQUATE DUE TO HIGH PROCESS PLANNING COSTS AND A LACK OF STANDARDIZATION.

3 81 1026
PRODUCTION OF LOW COST MISSILE VANES

METAL CONTROL VANES,FINS AND MISSILE FAIRINGS CAUSE HIGH COST,WEIGHT PENALTIES AND LONG LEAD TIME

3 81 3139
MILLIMETER SEEKERS FOR TERMINAL HOMING (TH)

LOW QUANTITY PRODUCTION IS TOO COSTLY FOR THE SYSTEM REQUIREMENTS.

3 81 3294
PRODUCTION PROCESS FOR ROTARY ROLL FORMING

MECHANICALLY JOINING OR WELDING A CONVENTIONAL CLOSURE TO COMMERCIAL TUBING IS EXPENSIVE.

3 81 3445
PRECISION MACHINING OF OPTICAL COMPONENTS

EXISTING PRECISION MACHINING FACILITIES CANNOT KEEP UP WITH THE DEMAND, MEET OPTICAL DESIGN REQUIREMENTS, MEET PRODUCTION SCHEDULES, AND STAY WITHIN REASONABLE COST BOUNDARIES.

ARRADCOM-ARRCOM (AMMO)

5 81 1318
EST CHEM PROD + FILL CLOSE + LAP TECH F/XVX2 XM736

THE 3L PROCESS FOR VX BINARY MFG RESULTS IN LARGE QUANTITIES OF WASTE, AND ORGANIC PHOSPHOROUS COMPOUNDS. PRIOR PROCEDURES FOR DISPOSAL (DEEP WELL) ARE NO LONGER ACCEPTABLE. NEW TECHNIQUES ARE REQUIRED.

PROJECTS ADDED IN 2ND HALF, CY80
(CONTINUED)

5 81 1907
AUTOMATED GAGING FOR MED. CAL. PROJ. BODIES (CAM)

CURRENT INSPECTION IS INADEQUATE TO MEET 5 INCH PROJECTILE BODIES REQUIREMENT AND REQUIRES DESIGN CHANGES.

5 81 4225
RED WATER POLLUTION ABATEMENT SYSTEM

RED WATER PRODUCED IN VOLUME FROM THE PURIFICATION OF TNT IS A POLLUTANT FOR WHICH A SATISFACTORY DISPOSAL METHOD DOES NOT EXIST.

5 81 4285
TNT EQUIVALENCY TESTING FOR SAFETY ENGINEERING

PRESENT CRITERIA FOR BLAST RESISTANT STRUCTURES IS IN TERMS OF SURFACE BURST OF HEMISPHERICAL TNT. IN STRUCTURAL DESIGN, TO PROTECT FROM THE OUTPUT OF OTHER ENEGETICS, THE DESIGNERS MUST HAVE DATA PERTINENT TO THE MATERIAL IN QUESTION.

5 81 4288
EXPLOSIVE SAFE SEPARATION AND SENSITIVITY CRITERIA

DATA IS REQUIRED TO UPGRADE PROCESSES AND MATERIAL FOR THE MAXIMUM SAFETY OF PERSONNEL AND EQUIPMENT AGAINST EXPLOSION PROPOGATION.

5 81 4341
IMPROVED NITROCELLULOSE PURIFICATION PROCESS

EXISTING NITROCELLULOSE PURIFICATION FACILITIES WERE BUILT IN EARLY 1940"S AND ARE IN DETERIORATED CONDITION. THE PROCESS USED DATES BACK TO WW1 AND CONSUMES LARGE QUANTITIES OF ENERGY AND WATER.

5 81 4344
FSTAB OF WASTE DISPOSAL TECH FOR M687 BINARY PROJECT

LARGE QUANTITIES OF SOLID WASTES ARE GENERATED DURING DF MFG. THERE IS NO ACCEPTABLE DISPOSAL METHOD. DRUM STORAGE IS NOT FEASIBLE AND LANDFILL MAY REQUIRE SPECIAL PREPARATION.

5 80 4417
PROCESS TECHNOLOGY FOR BLENDING RP SMOKE COMPOSITIONS

SMOKE PRODUCED FROM HC HAS LED TO SOME INJURIES AND IS SUSPECTED OF BEING A CARCINOGEN. R+D WORK IS BEING DONE TO DEVELOP A RED PHOSPHORUS MIX TO REPLACE HC. HOWEVER NO LARGE SCALE RP PREPARATION FACILITIES CURRENTLY EXIST.

PROJECTS ADDED IN 2ND HALF, CY80
(CONTINUED)

5 81 4454
AUTO INSP DEVICE EXPLOS CHARGE SHELL (AIDECS)

THE PRESENT METHOD OF INSPECTION LOADED PROJECTILE UTILIZES A STANDARD RADIOGRAPHIC FLM METHOD. LABOR AND MATERIAL (FILM) ARE COSTLY. DETERMINATION OF CRITICAL DEFECT IS SUBJECT TO HUMAN JUDGEMENT, FATIGUE, AND ERROR.

5 80 4480
HIGH SPEED HEAD TURN TOOL MOD F/SC AMMO PROD

THE SCAMP CASE SUBMODULE HAS CONTINUOUSLY EXPERIENCED EXCESSIVELY HIGH USAGE RATE OF HEAD TURN TOOL MODULES. THIS IS DUE MORE TO THE TOOL MODULE GOING OUT OF ADJUSTMENT THAN TO BREAKAGE OF TOOLING.

5 80 4484
IMPR HI-SPEED WATERPROOFING APPL F/SC AMMO

THE PRIMER LACQUER AND MOUTH WATERPROOFING APPLICATOR SYSTEMS ON THE SCAMP PRIMER INSERT SUBMODULE PERIODICALLY FAIL TO PERFORM AS REQUIRED. THE MISAPPLICATION RESULTS IN EXPENSIVE REWORK.

TOTAL PROJECTS ADDED IN 2ND HALF, CY80 71

MMT PROGRAM

PROJECTS COMPLETED 2nd HALF, CY80

PROJECTS COMPLETED IN 2ND HALF, CY80

MERADCOM

E 78 3605
TRANSCALENT-HIGH POWER-TRANSISTOR

RCA COMPLETED THE WORK WHICH IS DESCRIBED IN E79 3605. THIS 30K WAS TO GET THE CONTRACT STARTED EARLY.

E 79 3605
TRANSCALENT-HIGH POWER-TRANSISTOR

RCA DEVELOPED SPECIAL FIXTURES AND PRODUCTION PROCEDURES FOR RAPID FABRICATION OF HEAT PIPES, AND FOR BONDING THE NEXT PIPE TO THE SILICON WAFER. PLATING, LAPPING AND SOLDERING GIVE VOID-FREE JOINTS. JIGS ALIGN EMITTER BALLASTS TO TRANSISTOR WAFERS.

E 80 3605
TRANSCALENT (HIGH POWER) TRANSISTOR

THE CONTRACT WITH RCA WAS TERMINATED BECAUSE STANDARD TECHNOLOGY OVERTOOK THIS WORK. OTHER DEVICES OF THE SAME CAPACITY ARE NOW AVAILABLE COMMERCIALLY. RCA PROVIDED A LESSONS LEARNED SUPPLEMENT AND VIDEO TPAES OF FABRICATION PROCESSES.

E 78 3606
250 AMP TRANSCALENT (HIGH POWER) RECTIFIER

RCA DEVELOPED A PROCESS FOR PLATING A TAPERED THICKNESS OF CONDUCTOR ON A WAFER. ALSO DEVELOPED JIGS, FIXTURES AND TEST GEAR TO APPLY HEAT PIPES TO HIGH CURRENT RECTIFIER WAFERS. PERFECTED HIGH TEMP BRAZING, METAL WICKS SINTERING AND COOLANT FILLING.

E 79 3606
250 AMP TRANSCALENT (HIGH POWER) RECTIFIERS

PROJECT WAS TERMINATED AT THE REQUEST OF RCA BECAUSE THE PROCESSES WERE PROVEN ON PROJECTS FOR HIGH POWER TRANSITORS AND THYRISTORS. RCA ACTIVELY PROMOTED THE SALE OF THIS TYPE DEVICE BUT A CHEAPER PACKAGE IS SELLING BETTER. SAMPLES ARE AVAILABLE.

E 79 3613
VEHICLE-MOUNTED ROAD MINE DETECTOR SYSTEM ANTENNAS

PRODUCTION OF ANTENNAS HAS BEEN FINISHED AND TESTS ARE COMPLETE. FINAL REPORT HAS BEEN APPROVED AND DELIVERED. PROJECT HAS BEEN COMPLETED.

PRECEDING PAGE BLANK-NOT FILMED

PROJECTS COMPLETED IN 2ND HALF, CY80
(CONTINUED)

E 79 3708
COATED FABRIC COLLAPSIBLE FUEL TANK-CIRCULAR SEAM WEAVING

CONTRACT AWARDED FOR PERFECTION OF WEAVING TECHNOLOGY TO PRODUCE LARGE SCALE SEAMLESS FABRICS FOR FUEL TANKS. SCALE MODEL SEAMLESS TUBES HAVE BEEN WOVEN. TRIAL COATINGS APPLIED TO TUBULAR FABRIC IN A LABORATORY COATER.

CORADCOM

2 78 9773
COMPUTER AIDED F/PREP OF AUTO ANALOG CIRCUIT PROD TEST PROG

A COMPUTER PROGRAM SYSTEM WAS DEVELOPED FOR AUTOMATED SOURCE CODE GENERATION OF TEST PROGRAMS FOR ANALOG UNITS UNDER TEST. THE SYSTEM IS APPLICABLE TO ANALOG AMPLIFIERS, OSCILLATORS, POWER SUPPLIES, MIXERS AND FILTERS. FUNCTIONAL TESTING DEMONSTRATED

ERADCOM

H 80 5095
MFG TECH ASSESSMENT OF ELECTRONICS

PROJECT WAS CANCELLED BECAUSE OF INSUFFICIENT MANPOWER. GOAL WAS TO SURVEY MAJOR WEAPONS SYSTEMS TO DETERMINE WHAT ELECTRONIC MMT WAS NEEDED.

2 76 9771
LOW TEMP PROCESS OF BULK SEMICONDUCTOR SWITCHES + LIMITERS

MICROWAVE ASSOC APPLIED PROCESS CONTROLS AND SET PROCESS TOLERANCES FOR PRODUCING SEMICONDUCTOR DIODE PROTECTORS FOR RADAR FRONT ENDS. PROJECT WAS DESCRIBED IN A PAPER AT GOMAC. SAMPLES WENT TO RAYTHEON FOR USE IN SPARROW MISSILES TESTED IN TPQ-36.

2 77 9808
AUTO INPROCESS EVAL OF THICK FILM PRINT + HYBRID CKT ASSY

THIS PROJECT IS COMPLETE. AN AUTOMATIC IN-PROCESS MICROCIRCUIT EVALUATION SYSTEM WAS DESIGNED, BUILT, AND TESTED. TECHNICAL AND PHYSICAL DESCRIPTIONS OF THE SYSTEM ARE AVAILABLE.

PROJECTS COMPLETED IN 2ND HALF, CY80
(CONTINUED)

2 77 9827
PROCESSING XP ARMOR FOR RADAR HARDENING APPLICATIONS

ALL WORK COMPLETED. QUALITY CONTROL REPORT ON CONTRACTOR SUBMITTED. PRODUCTION CAPABILITY DEMO HELD. THE PROCESS FOR MOLDING RIGID ARMOR SHEET FROM ASSEMBLIES OF ORIENTED POLYPROPYLENE FILM SUCCESSFULLY DEMONSTRATED. FINAL REPORT APPROVED.

AMMRC

M 78 6370
OPTIMIZATION OF MMT PROGRAM EFFECTIVENESS

PROJECT IS COMPLETE. FINAL 301 REPORT RECEIVED. TECHNICAL REPORT INCLUDED WITH THE FINAL 301 REPORT.

NARADCOM

Q 79 8063
IMPROVED METHODS OF MFG OF BUTYL RUBBER HANDWEAR

TWO CONTRACTS WERE AWARDED TO INJECTION MOLD AND TO LATEX DIP GLOVES RESPECTIVELY. THE LATEX DIP CONTRACTOR FORMED SAMPLES WHICH WILL BE TESTED IN-HOUSE. IF THE SAMPLES ARE ACCEPTEBLE PHASE 2 WORK WILL BE INITIATED.

TACOM

4 76 4563
ROTATIONAL MOLDING OF LARGE CAPACITY FUEL TANKS.

RECEIVED M551 FUEL TANKS WITH AIR VENTS. TESTING CARRIED OUT AND RESULTS SUGGEST ITEM READY FOR PRODUCTION.

T 79 5007
ADVANCED TECHNOLOGY BRAKE LINING MATERIALS-PHASE 2

DATA GENERATED BY DYNOMOMETER TEST SHOWED THAT THE TEST LINING MATERIAL SHOWED NO IMPROVED PERFORMANCE OVER THE CURRENT ORGANIC LINING MATERIAL. THEREFORE THE PROJECT WAS TERMINATED. FUNDS WILL BE REPROGRAMMED.

PROJECTS COMPLETED IN 2ND HALF, CY80
(CONTINUED)

T 77 5014
IMPROVED FOUNDRY CASTINGS UTILIZING CAM

THE COMPUTER PROGRAMS FOR CASTING SOLIDIFICATION SIMULATION HAVE BEEN COMPLETED. FURTHER CASTING TRIALS ARE BEING PERFORMED IN AN EFFORT TO EVALUATE THE PROGRAMS WITH RESPECT TO THE MORE COMPLEX TORSION BAR HOUSING.

4 78 5019
PLASTIC CONTAINER FOR LOW MAINTENANCE DRY CHARGED BATTERY

FINAL DRAFT OF LOW MAINTENANCE BATTERY PERFORMANCE SPECIFICATION, WITH TRI-SERVICES AND INDUSTRY COORDINATED COMMENTS RESOLVED, HAS BEEN COMPLETED. THE SPECIFICATIONS ARE NOW BEING PUBLISHED FOR GTN LOW MAINTENANCE BATTERIES.

T 78 5024
CAM GEAR DIE DESIGN AND MANUFACTURING PHASE I.

A SET OF COMPUTER PROGRAMS HAS BEEN DEVELOPED TO DEFINE THE EXACT TOOTH FORM OF A HYPOID OR SPIRAL BEVEL GEAR OR PINION. THE FINITE ELEMENT PROGRAMS FOR STRESS ANALYSIS AND TEMPERATURE DISTRIBUTION OF THE DIE HAVE BEEN COMPLETED. CONTINUED ON 6795024

T 79 5054
LASER SURFACE HARDENED COMBAT VEHICLE COMPONENTS-PHASE 1

PHASE 1 OF THE CONTRACT HAS BEEN COMPLETED. TRACK COMPONENTS HAVE BEEN DELIVERED FOR FIELD TESTING. PROJECT WORK HAS BEEN COMPLETED. PHASE 2 WORK WILL BE PERFORMED UNDER THE FOLLOW-ON FY81 PROJECT.

T 79 5082
FLEXIBLE MACHINING SYSTEMS PILOT LINE FOR TCV COMPONENTS

THIS PROJECT (PHASE 1 OF THE ARMY'S FMS PROGRAM) IS COMPLETE. THIS PROJECT HAS LAID THE GROUNDWORK FOR CARRYING OUT THE ENTIRE FMS PROGRAM. SEE PROJECT T 80 5082.

T 79 6000
LIGHT WEIGHT TILT-UP HOOD FENDER ASSEMBLY-PHASE1

CONTRACT AMENDED TO PROCURE HOOD/FENDER ASSEMBLY FOR THE M963 5-TON PIP TRUCK. THIS CHANGE NEVER FUNDED AND CONTRACT TERMINATED FOR CONVENIENCE OF GOVT. DA DIRECTED DARCOM NOT TO USE M939 TRUCK CHASIS THAT WAS AVAILABLE FOR TESTING.

PROJECTS COMPLETED IN 2ND HALF, CY80
(CONTINUED)

T 78 6023
FABRICATION OF FLAT THIN GAGE ALLOY STEEL PLATE

THE CONTRACTOR IS NOW PURCHASING MATERIAL WITHIN THE ONE HALF INCH OUT OF FLATNESS MAXIMUM. 302 REPORT IS PUBLISHED.

TECOM

0 78 5071
IMPROVEMENT OF PRODUCTION TEST METHODOLOGY

SEE SUBTASKS BELOW FOR PROJECT STATUS.

0 78 5071 31
GEDAAC AND CONVENTIONAL INSTRUMENTATION DATA CORRELATION

A TECH DEFINITION OF THE TOTAL DATA REQ OF GENERATOR TESTS PERFORMED UNDER APG INTERNAL PROCEDURES HAS BEEN COMPLETED. COMPUTER PROGRAMS HAVE BEEN WRITTEN TO COMPUTE THE HARMONIC CONTENT AND THE WAVEFORM DEVIATION OF THE TEST GENERATOR WAVEFORM.

0 78 5071 39
TRANSDUCER VELOCITY MEASUREMENT

MATHEMATICAL APPROACHES THAT HAVE BEEN DEVELOPED HAVE BEEN REVIEWED. A THEORETICAL MODEL HAS BEEN DEVELOPED. THIS MODEL WILL BE SUBJECTED TO VERIFICATION USING SIMULATION TECHNIQUES.

0 78 5071 48
TANK MAIN WEAPON FIRING INHIBITOR

AN OPTICAL INHIBITOR SYS USING DETECTION OF CODED LIGHT HAS BEEN BREADBOARDED AND HAS BEEN DEMONSTRATED. THE SYSTEM HAS A RANGE CAPABILITY OF 2000 METERS. DUE TO GROUND WAVE INTERFERENCE, THE SYS IS ONLY RELIABLE UP TO 1000 METERS.

0 78 5071 49
IMPROVED TRANSPORTABILITY/CONTAINER TEST CAPABILITY

PRELIMINARY PLANS & COST ESTIMATES HAVE BEEN COMPLETED FOR A NEW LANDSHIP MATL HANDLING TEST FACILITY TO IMPROVE EQUIP TRANSPORTATION TESTING AT APG. PREPARATION OF CONSTRUCTION OF FACILITIES DOCUMENTS ARE BEING PREPARED.

PROJECTS COMPLETED IN 2ND HALF, CY80
(CONTINUED)

AVRADCOM

1 76 7079
BRAIDING OF REINFORCED PLASTIC STRUCTURAL COMPONENT

PROJECT WORK WAS COMPLETED. THIS PROJECT ESTABLISHED THE PROCESSING AND IMPREGNATING TECHNIQUES FOR BRAIDING PRIMARY STRUCTURAL HELICOPTER COMPONENTS. THE FINAL TECHNICAL REPORT WILL REPRESENT THE BASIS FOR FUTURE IMPLEMENTATION OF THIS TECHNIQUE.

1 77 7114
MFG TECHNIQUES FOR INFRARED SUPRESSION AIRCRAFT COMPONENTS

ALL CONTRACT HAS BEEN COMPLETED. FOUR PARTS FABRICATED FROM A 321 CRES MATERIAL AND ONE FROM A-286 MATERIAL HAVE BEEN SHIPPED TO CCAD. CONTRACTOR'S REPORT HAS BEEN SUBMITTED TO CCAD. PROJECT IS COMPLETED.

1 79 7119
NON-DESTRUCTIVE EVALUATION TECH FOR COMPOSITE STRUCTURES

PROJECT WORK WAS COMPLETED. FATIGUE TESTS ON K747 AH-1 COMPOSITE ROTOR BLADE WERE COMPLETED. WORK WILL BE CONTINUED IN 1 80 7119.

1 78 7121
INTEGRALLY HEATED + PRESSURIZED TOOLING F/UTTAS ROTOR BLADES

PROJECT WORK WAS COMPLETED. THE WORK WAS TECHNICALLY SUCCESSFUL, AND FULFILLED THE PRINCIPLE PROJECT OBJECTIVE OF REDUCING CURE COSTS. THIS TECHNOLOGY WILL BE IMPLEMENTED FOR TAIL ROTORS FOR OH-58 TYPE HELICOPTERS, AND FOR OTHER SIMILAR APPLICATIONS.

1 78 7123
CONTINUOUS BALANCING OF HELICOPTOR SHAFTING

AN ECONOMIC ANALYSIS OF THE PROCESS WAS COMPLETED. DEMONSTRATION OF SHAFT BALANCING PROCEDURE WAS COMPLETED ON 16 SEP 80. FINAL TECHNICAL REPORT HAS BEEN PREPARED. AUTOMATED BALANCING MACHINE IS PLANNED FOR TROUBLESHOOTING FOR AAH HELICOPTER PROGRAM.

1 78 7183
SEMI-AUTO COMPOSITE MFG SYS- HELICOPTER FUSELAGE STRUCTURES

PROJECT WORK WAS COMPLETED. THE MANUFACTURING PLANS FOR THE UPPER FAIRING DOORS AND THE WORK PLATFORM HAVE BEEN FINALIZED. TOOLING REQUIREMENTS AND PRELIMINARY TOOLING CONCEPTS WERE ESTABLISHED. WORK IS BEING CONTINUED IN MMT 1797183.

PROJECTS COMPLETED IN 2ND HALF, CY80
(CONTINUED)

1 79 7183
SEMI-AUTO COMPOSITE MFG SYS-HELICOPTER FUSELAGE STRUCTURES

PROJECT WORK WAS COMPLETED. AN ACQUISITION COST ANALYSIS REPORT COVERING PROJECTED ACQUISITION COSTS AND COST TRADE-OFFS BETWEEN PROTOTYPE AND COMPOSITE DOORS WAS COMPLETED. TOOLING WAS FABRICATED. WORK IS CONTINUING IN MMT 1807183.

1 80 7183
SEMI-AUTO COMPOSITE MANUFAC SYSTEM HELICOPTER SECONDARY STRU

PROJECT WORK WAS COMPLETED. FABRICATION OF THE FAIRING DOORS AND WORK PLATFORM IS IN PROCESS. NORTHRUP, THE SUBCONTRACTOR TO HUGHES HAS COMPLETED WORK. HUGHES IS CONTINUING WORK ON A LIMITED BASIS. WORK IS BEING CONTINUED IN MMT 1817183.

1 79 7197
FABRICATION OF INTEGRAL ROTORS BY JOINING

PROJECT IS COMPLETE. HARDWARE FABRICATION AND MATERIAL VALIDATION WERE SUCCESSFULLY COMPLETED. FOLLOW ON PROJECTS WILL PROCURE AND ENGINE TEST HARDWARE FOR T63-A700/A720.

1 79 7200
COMPOSITE ENGINE INLET PARTICLE SEPARATOR

SUBELEMENT TESTING WAS COMPLETED. WORK IS CONTINUING UNDER PROJECTS 1 80 7200 AND 1 81 7200.

1 80 7200
COMPOSITE ENGINE INLET PARTICLE SEPARATOR

PROJECT WORK WAS COMPLETED. SUBELEMENT TESTING WAS COMPLETED. FABRICATION OF SWIRL FRAMES WAS INITIATED, AND WILL BE CONTINUED IN 1 81 7200.

1 79 7202
APPLICATION OF THERMOPLASTICS

PROJECT WORK WAS COMPLETED. ATTEMPTS TO MOLD THE RIBBED INNER SKIN OF THE ENGINE ACCESS DOOR DEMONSTRATION COMPONENT RESULTED IN WRINKLING. ADDITIONAL MATERIALS OTHER THAN WOVEN KEVLAR REINFORCED POLYSULFONE WILL BE TRIED IN THE FY80 PROJECT.

PROJECTS COMPLETED IN 2ND HALF, CY80
(CONTINUED)

1 78 7284
SUPERPLASTIC FORMING/DIFFUSION BONDING OF TITANIUM

PHASE I COMPONENT SELECTION AND TOOL DESIGN WAS COMPLETED. THIS PROJECT IS COMPLETED.

1 78 7286
SUPERALLOY POWDER PRODUCTION FOR TURBINE COMPONENTS

ALL CONTRACTS AND SUBCONTRACTS HAVE BEEN ESTABLISHED. INITIAL POWDER BLENDS WERE EVALUATED FOR CLEANLINESS AS ATOMIZED AND AFTER VARIOUS PROCESSING STEPS. CONTAMINANTS WERE IDENTIFIED. FAILURES WERE RELATED TO IDENTIFIED CONTAMINANTS. SEE FOLLOW-ONS.

1 79 7291
TITANIUM POWDER METAL COMPRESSOR IMPELLER

MATERIAL AND PROCESS REVIEW WERE COMPLETED. TOOLING DESIGN WAS COMPLETED. PROJECT IS COMPLETE. WORK TO CONTINUE IN FOLLOW ON EFFORT.

1 79 7297
PROD-INSTALL OF URETHANE EDGE GUARDS ON ROTOR BLADES

PROJECT WORK WAS TERMINATED DUE TO MATERIAL PROBLEMS. BUBBLES AND SURFACE INDENTATIONS IN THE MATERIAL COULD NOT BE ELIMINATED, AND WOULD REQUIRE EXTENSIVE BASIC DEVELOPMENT WORK TO RESOLVE.

1 78 7348
LTWT COMPOSITE FASTENING SYS FOR COMPOSITE HELICOPTER COMPTS

PROJECT WORK WAS COMPLETED. THE COMPOSITE FASTENERS, TESTED ON A 40X40 INCH PANEL SECTION OF THE TAILBOOM OF THE BLACKHAWK HELICOPTER, MET ALL PROJECT OBJECTIVES. RESULTS OF THE PROJECT WILL BE PRESENTED IN A TECHNICAL REPORT AND A BRIEFING.

1 75 8035
PROD OF TRANSPARENT FORMS OF POLYOLEFIN FOR LTWT ARMOR APPLN

ALL TASKS COMPLETED. 20 TRIANGULAR WINDOWS IN 2 THICKNESSES MOLDED AND COATED ON EACH SIDE WITH ABRASION RESISTANT COATING. 850 LBS OF COMMERICAL FILM FROM SAME ORDER DLVD TO AMMRC. PROCESS SPEC SENT AND FINAL REPORT DISTRIBUTED IN JANUARY, 1981.

PROJECTS COMPLETED IN 2ND HALF, CY80
(CONTINUED)

1 76 8148
PROCESSING ADVANCED GEAR MATERIALS

INVESTIGATION IS COMPLETE. CONTRACTOR IS PREPARING THE FINAL TECHNICAL REPORT.

MICOM

R 77 3135
PROCESS DEVELOPMENT FOR CARBORANE MANUFACTURE

THE IMPLEMENTATION OF THIS PROJECT IS UNDERWAY WITH IPF FUNDS. THE CONTRACTOR'S FINAL TECHNICAL REPORT OF 27 VOLUMES WAS RECEIVED.

R 79 3136
IMPROVED MFR PROCESSES FOR COMPLIANT BEARING GYROS

A PILOT PRODUCTION LINE WAS SET UP AND EIGHT GYRO'S WERE PRODUCED. A DEMONSTRATION INCLUDING A PIECE PART DISPLAY, COMPLIANT BEARING MOLDING, ROTOR BALANCING AND AUTOMATED PERFORMANCE TESTING WAS HELD BY HONEYWELL FOR GOVT AND INDUSTRY.

R 79 3142
PRODUCTION METHODS FOR LOW COST PAPER MOTOR COMPONENTS

APPLICATION OF REALISTIC NDT METHODS FOR SCREENING CRITICAL DEFECTS WITH REAL TIME RADIOGRAPHY, SONICS AND/OR OTHER COST EFFECTIVE SCANNING TECHNIQUES STUDIES CARRIED OUT. INTERIM PROJECT TECHNICAL REPORT IS BEING PREPARED.

R 78 3167
PROD CONTROLS TO PREVENT PLATED-THROUGH HOLE CRACKING

HUGHES IMPLEMENTED PLATING PROCESS CHANGES INTO ITS PLATING LINE.ADDED AMONIA AND OTHER AGENTS TO PLATING BATH TO BALANCE THROWING POWER AND DUCTILITY OF PYROPHOSPHATE COPPER PLATED INTO THRU-HOLES. WAS DEMONSTRATED TO 140 ATTENDEES ON 21,22 AUG.

R 78 3171
AUTO MONITOR AND CONTROL FOR WAVE SOLDERING MACHINES

THIS PROJECT IS COMPLETE. AN INDUSTRY DEMONSTRATION WAS HELD IN SEPT 1980. A 50 PERCENT DECREASE IN SOLDER DEFECTS WAS OBTAINED OVER THE OLD METHOD. PROJECTED SAVINGS ARE ESTIMATED AT 1.1 MILLION DOLLARS.

PROJECTS COMPLETED IN 2ND HALF, CY80
(CONTINUED)

R 79 3242
DIGITAL FAULT ISOLATION OF PRINTED CIRCUIT BOARD

THE DEVELOPED SYSTEM ENHANCED A COMMERCIALLY AVAILABLE DTS-70 HEWLETT PACKARD TEST SYSTEM WITH A SIGNATURE ANALYZER, A SOFTWARE ENHANCEMENT THAT WILL ALLOW COMPREHENSIVE TESTING OF ALL TYPES OF DIGITAL PRINTED CIRCUIT CARDS. IMPLEMENTATION PLANNED.

R 78 3253
HIGH CURRENT DENSITY CATHODES

SPERRY DEVELOPED A METHOD TO VAPOR DEPOSIT MOLYBDENUM CONES + A GATE FILM IN + ON A SILICON DIOXIDE LAYER TO FORM THOUSANDS OF TINY EMITTERS. SPERRY'S REPORT DESCRIBES ALL PROCESSING STEPS. CATHODES WERE INSTALLED IN A TEST ITEM. FY78 WORK COMPL.

R 79 3272
FLEX PRINTED CIRCUITS WITH INTEGRAL MOLDED CONNECTORS

WESTINGHOUSE ESTABLISHED PRODUCTION METHODS FOR FLEXIBLE PRINTED CIRCUITS WITH MOLDED CONNECTORS. PROCESSES OPTIMIZED INCLUDE LASER INSULATION STRIPPING, LASER WELDING & AUTOMATED INJECTION MOLDING. WORK COMPLETED EXCEPT FOR FINAL REPORT. DEMO HELD.

R 78 3436
DEVELOPMENT OF CERAMIC CIRCUIT BOARDS AND LARGE AREA HYBRIDS

BOTH CONTRACTORS HAVE COMPLETED THE FIRST PHASE OF THE EFFORT AND ARE PREPARING FINAL REPORTS.

R 78 3440
PRODUCTION TESTING OF CONTROL SYSTEMS FOR GUIDED WEAPONS

THE AUTOMATED EQUIPMENT DEMONSTRATED A TEST CYCLE OF 9 MIN. & 41 SEC. THE CONTRACT REQUIREMENT WAS 12 MIN OR LESS. THE CONTRACT REQ. & OBJECTIVES WERE SUCCESSFULLY COMPLETED. A SECOND TEST STAND IS BEING FAB FOR THE COPPERHEAD PRODUCTION.

ARRADCOM-ARRCOM (AMMO)

5 75 1284
IMPROVEMENT + MOD OF INSP AIDS F/DEF + PROT ITEMS

THIS PROJECT HAS BEEN COMPLETED. THE XQ127A1 PROTOTYPE TESTER IS A SIGNIFICANT IMPROVEMENT OVER Q127. HOWEVER, TEST RESULTS OF XQ127A1 TESTER HAVE NOT JUSTIFIED ADOPTION OF THIS TESTER. SOME IMPROVEMENTS ARE REQUIRED BEFORE THE TESTER CAN BE ACCEPTED

PROJECTS COMPLETED IN 2ND HALF, CY80
(CONTINUED)

5 77 1320
PILOT STATIONS FOR FILLING + CLOSING IMPROVED WP MUNITIONS

DEBUGGING OPERATIONS OF FILL LINE EQMT COMPLETED. ALL LAP LINE EQMT WAS INSTALLED AND TEST OPERATED.

5 78 1320
PILOT STATIONS FOR FILLING + CLOSING IMPROVED WP MUNITIONS

DURING SEP TO OCT 80 1500 RDS WERE FILLED AND LAPED WITH A MINIMUM OF PROBLEMS. LINE ACCEPTED IN OCT 80 AND LOW RATE INITIAL PRODUCTION INITIATED ON CANISTER FILLING. A FINAL TECHNICAL REPORT HAS BEEN PREPARED.

8 78 1339
PREPARATION OF B-1 DYE

A SPRAY DRYING METHOD WAS DEVELOPED FOR THE USE OF B-1 DYE IN M9 DETECTOR PAPER. A MANUFACTURING DIRECTIVE FOR B-1 DYE WAS PREPARED AND SUBMITTED FOR INCLUSION IN THE TOP. A FINAL TECHNICAL REPORT WAS PREPARED.

5 77 3905
PS127 RESERVE POWER SUPPLY MFG FOR THE XM587 FUZE

SPECIAL MACHINES WERE DESIGNED AND USED TO BUILD 160 P5127 BATTERIES. FINAL ASSEMBLY WAS BY HAND AND THE BATTERIES WERE SUCCESSFULLY TESTED, THEREBY VALIDATING BOTH THE PROCESS AND THE MACHINES. MODS RECOMMENDED TO BE EMPLOYED IN THE IPF.

5 79 3913
MECHANICAL JOINING OF MINIATURIZED ELECTRONIC COMPONENTS

HDL LASER WELDED BATTERY COMPONENTS BUT THEY HAD INTERNAL LEAKS. HDL WELDED ANTI-SPIN TABS ON THE UNATTENDED JAMMER. THESE WILL BE DESCRIBED IN THE FINAL REPORT WHICH IS NOW IN EDITORIAL DEPT. A DESIGN GUIDE CANNOT BE PREPARED BECAUSE OF LOW FUNDING.

5 77 4000
AUTOMATED M55 DETONATOR PRODUCTION EQUIPMENT

FINAL STATUS REPORT SUBMITTED. WORK WAS INITIATED ON CUP INSPECTION MODULE. INSPECTION MODELS FOR ASSEMBLED DETONATORS WERE CONSTRUCTED. TESTS WITH LACQUERS WERE CONDUCTED. THE MULTI-TOOLED LOADER WAS DEBUGGED. AN ASPIRATOR SYSTEM WAS FABRICATED.

PROJECTS COMPLETED IN 2ND HALF, CY80
(CONTINUED)

5 78 4000
AUTOMATED M55 DETONATOR PRODUCTION EQUIPMENT

FINAL STATUS REPORT SUBMITTED. AUTO INSPECTION MODULE WAS SUCCESSFULLY TESTED. CONCEPTS WERE ESTABLISHED FOR AUTO PACKOUT MODULE. DESIGN AND BUILD OF ASSEMBLY MODULE REACHED 60% COMPLETION. EQUIPMENT MODEL OF ULTRASONIC SEALER WAS FABRICATED.

5 75 4050
AUTOMATED LOADING OF PROPELLANT FLASH REDUCERS

TESTING WAS SUCCESSFULLY COMPLETED IN LOADING THE M3 BAG. HOWEVER THE REQUIREMENT FOR THE M3 CEASED. TESTING OF THE LOAD MODULE ON THE M3A1 BAG WAS UNSUCCESSFUL. INSTRUCTIONS TO STORE THE MODULE AT INAAP IN ITS PRESENT LEVEL OF COMPLETION WERE GIVEN.

5 76 4114
METHODS TO MINIMIZE ENVIRONMENTAL CONTAMINANATION

REFER TO INDIVIDUAL TASK AREAS. TOTAL RESPONSIBILITY FOR SUBPROJECT 1, TASKS 14 AND 15 HAVE BEEN TRANSFERRED FROM DRDAR-LCM-S TO DRDAR-LCU-M, AS SUBPROJECT 2, TASKS 1 AND 4. TECHNICAL REQUIREMENTS FOR FY76 HAVE NOW BEEN COMPLETED.

5 76 4114 F01
IDENT + CONTROL OF POLLUTION - PRESENT REQMTS

HAYS AAP DETERMINED NOT TO MEET CURRENT POLLUTION ABATEMENT REQMTS. COSTS OF MODERNIZING SAME FACILITIES AT ST LOUIS AAP DETERMINED. SAMPLING ANALYSES AT SCRANTON AAP SHOWED SIGNIFICANT REDUCTION IN POLLUTANT DISCHARGE INCL. CR, ZN, PO4 AND CRO4.

5 76 4114 F02
CONTROL OF POLLUTION GENERATED BY SURFACE TREAT LINES

LINE WASTE TREATMENT PILOT PLANT PUT INTO FULL OPERATION AT SCRANTON AAP. IT RECYCLES 50PCT OF H2O. CONTRACT AWARDED FOR DESIGN OFSYSTEM FOR ABATEMENT OF SURFACE LINE POLLUTION AT LA AAP. EVALUATION OF ULTRAFILTRATION FOR REGEN OF ALKALI CLNG SOL CPL

5 76 4114 F04
IMPROVED TREATMENT FOR PRIMER MIX PLANT

BATELLE REPORT PROPOSES INTEGRATED SYSTEM FOR DESENSITIZATION TREATMENT AND DISPOSAL OF PRIMER WASTES. SYSTEM APPLICABLE TO FRANKFORD ARSENAL, TWIN CITIES AAP AND LAKE CITY AAP. REPORT INCLUDES BACKGROUND STUDIES AND CONCEPT EVALUATION OF PROPOSALS.

PROJECTS COMPLETED IN 2ND HALF, CY80
(CONTINUED)

5 76 4114 F06
LUBRICATION POLLUTION PROBLEMS

CONTRACTS AWARDED TO EXXON TO DETERMINE FEASIBILITY OF REPROCESSING WASTE LUBRICATING AND COOLING OILS AT SCRANTON, TWIN CITIES AND RIVERBANK AAPS. DISSOLVE AIR FLOTATION WOULD BE USED TO BRING OIL CONCENTRATION IN WASTEWATER TO MANAGEABLE 10-15 PPM.

5 76 4114 F08
POLLUTION ABATEMENT FROM PLATING OPERATIONS

TWO CONCEPT DESIGNS FOR TREATMENT OF AL CHROMATING AND AL HARDCOAT ANODIZING OPS WASTE STREAMS. BOTH USE PRECIPITATION AS PRINCIPAL MEANS OF SEPARATION. ION-EXCHANGE USED WHEN HIGH PURITY H20 REQUIRED. FINAL REPORT PUBLISHED.

5 76 4114 F12
POLLUTION CONTROL FOR SCAMP

PILOT LINE UTILIZING REVERSE OSOMSIS TESTED AT TWIN CITIES AAP ON ACTUAL SCAMP LINE WASTES. THIS TECHNIQUE EFFECTIVE IN CONCENTRATING OILY WASTES. MEMBRANE SUSCEPTIBLE TO FOULING AT TEMPERATURES ABOVE 100 DEG. F. FINAL REPORT PREPARED.

5 76 4114 F13
MONITOR + CONTROL OF POLLUTANTS

ON SITE H20 QUALITY TESTING PERFORMED AT LA AAP. EQUIPMENT PROVIDES RAPID, SEMI-AUTOMATIC MEANS OF ANALYSIS OF H20 AT METAL PARTS PLANT. EVAL OF AIR MONITORING EQUIP CONDUCTED AT SCRANTON AAP. REGULAR MONITORING EQUIP CAN BE ADAPTED TO AAP PLANT USE.

5 76 4114 F14
ELIM OF AIR POLLUTION FROM METAL PARTS MFG

EVAL CONDUCTED OF CHARGED DROPLET SCRUBBER AT SCRANTON AAP FORGE SHOP. PILOT UNIT INDICATES VERY GOOD REMOVAL EFFICIENCY. THIS PLUS SMOG HOG RECOMMENDED FOR SCRANTON AAP FORGE SHOP MCA PROJECT. NOT RECOMMENDED FOR OTHERS UNTIL THIS ONE INSTD/DEBUGGED

5 76 4114 F16
WATER BASED FORGING LUBRICANTS

ALTHOUGH SUCCESSFUL IN LABORATORY TESTS, ALL EFFORTS TO PRODUCE A VIABLE MEANS OF APPLYING THE LUBRICANT IN A PRODUCTION MODE WERE UNSUCCESSFUL. WORK MAY BE RE-DIRECTED, BUT DECISION MADE TO CURTAIL ALL EFFORTS UNDER THIS TASK.

PROJECTS COMPLETED IN 2ND HALF, CY80
(CONTINUED)

5 76 4114 P01
PROGRAM CONTROL, COORDINATION AND SUPPORT

CONTINUOUS COORDINATION AND LIASON WAS MAINTAINED WITH ALL COMMAND ACTIVITIES AS WELL AS OTHER GOVERNMENT AGENCIES ON PROGRAMS TO CONTROL ENVIRONMENTAL POLLUTION.

5 76 4114 P04
NO-X ABATEMENT METHODS

AFTER BENCH SCALE STUDIES, A SULFURIC ACID AND SELLITE SCRUBBING SYSTEM WAS DESIGNED AND INSTALLED FOR CONTROL OF NOX AND TNM FROM TNT MANUFACTURE. FINAL TESTING NOT COMPLETED BECAUSE TNT FACILITY AT RADFORD IS NOT IN OPERATION. SEE ALSO P33.

5 76 4114 P06
PROPELLANT AND EXPLOSIVE WASTE INCINERATION

NEW FLUIDIZED BED INCINERATOR AND P AND E SLURRY FEED SYSTEM TESTED WITH INERT SIMULANTS AND DEBUGGED. PILOT PLANT EVALUATION, USING EXPLOSIVE, MADE. RESULTS EXCELLENT AND PROVED VIABILITY OF P AND E DISPOSAL THAT IS SAFE AND SUPERIOR TO OTHER SYSTEM

5 76 4114 P07
ELIMINATION OF NITRATE WASTES

DEVELOPED DESIGN DATA FOR A BIOLOGICAL DENITRIFICATION SYSTEM. ALTHOUGH THE TECHNOLOGY WAS SUCCESSFUL, BOTH THE CAPITAL COSTS AND OPERATING COSTS ARE EXCESSIVE. AN ECONOMIC AND PERFORMANCE COMPARISON SHOULD BE MADE WITH OTHER PROCESSES.

5 76 4114 P08
DISPOSAL OF RED WATER FROM TNT PURIFICATION

FIVE CONTINUOUS LONG DURATION PILOT SCALE MULTI-HEARTH FURNACE TESTS WERE PERFORMED AT NICHOLS ENGINEERING TO OBTAIN DATA FOR FY83 MCA PROJECT AT RAAP. TECHNOLOGY DEVELOPMENT EFFORTS ON SUNOCO SULFITE RECOVERY PROCESS WILL CONTINUE UNDER PROJ 5784225

5 76 4114 P10
DISPOSAL OF WASTES FROM PROPELLANT MFG

STUDIES DEMONSTRATED THAT MEMBRANE TECHNOLOGY EQUIPMENT CAN EFFECTIVELY REMOVE AND SEPARATE COLLAGEN AND SODIUM SULPHATE FROM THE BALL POWDER MANUFACTURE WASTEWATER STREAM AND CONCENTRATE BOTH TO ACCEPTABLE LEVELS FOR POSSIBLE REUSE. TECH REPORT MADE

PROJECTS COMPLETED IN 2ND HALF, CY80
(CONTINUED)

5 76 4114 P12
ELIMINATION OF ORGANIC WASTES SUCH AS SOLVENT

0.7PCT NAOH IN H20 SCRUBBER DECOMPOSED NG VAPOR TO LESS THAN 0.1PPM IN EXHAUST AIR. STUDIES SHOWED ADDN OF H20 TO SCRUBBER WOULD ABSORB ETHANOL AND ALLOW ONLY SMALL QUAN OF ACETONE TO LEAVE SCRUBBER. ADSORBENT RESIN NOT REC FOR REMOVING NG/SOLVENTS.

5 76 4114 P16
PROCESS WATER MANAGEMENT AT GOCO PLANTS

RECS FROM H20 MGMT STUDIES WILL BE USED IN NITROGUANIDENE PROD AT SUNFLOWER AAP AND THE HN03 PLT AT VOLUNTEER AAP. THEY WILL LOWER H20 USAGE AND INPUT TO WASTE TRTMT PLT. REC FROM IOWA AAP STUDIES WILL BE USED IN OPERATING PROCEDURES WITH SIMLR BENFT

5 76 4114 P19
METHODS + EQPT TO MONITOR AND CONTROL POLLUTANTS

SUCCESSFUL EVAL OF BEST POLLUTION MONITORS RESULTED IN FOLLWG IMPLTN- SULFIDE MONITOR AT RAAP- TOTAL C AT RAAP- STACK MONITOR AT ARRADCOM. POLAROGRAPHIC AND RAMAN H20 MONITORS IMPLEMENTATION PENDING FIELD DEMONSTRATION UNDER 5XX4462.

5 76 4114 P20
DISPOSAL OF LEAD AZIDE

HAZARDS ANALYSIS COMPLETED FOR IOWA AAP. ELETROLYTIC PROCESS VIABLE SINCE LEAD AZIDE ONCE DISSOLVED IN ANOH NOT READILY RECOVERABIE AS EXPLOSIVE. ELEC PROCESS IS CAPABLE OF BEING MANAGED TO INSURE SAFETY EQUIVALENT TO GENERALLY ACCEPTED INDUSTRY STDS

5 76 4114 P26
SO-X ABATEMENT METHODS

TECH REPORT DESCRIBES STATE-OF-THE-ART IN 502 ABATEMENT PROCESSES AS OF 1976. TRADEOFF ANALYSIS OF BEST SYSTEMS MILESTONE DELETED BECAUSE DECISION MADE NOT TO PURSUE DIETHYLENE GLYCOL PROCESS.

5 76 4114 P27
SOLID WASTE SOIL DISPOSAL TECHNIQUES

EXPERIMENTAL WORK AT CRANE IND PROVED THAT NO AIRBORNE TNT OR DERIVATIVES RELEASED DURING COMPOSTING OPERATION. ALSO NO TOXIC PRODUCTS PRODUCED. FINAL COMPOSTED PRODUCT MAY BE RETURNED TO THE LAND AS A SOIL ENRICHER FOR NON-FOOD CROP APPLICATIONS.

PROJECTS COMPLETED IN 2ND HALF, CY80
(CONTINUED)

5 76 4114 P31
FREEZE TECHNOLOGY FOR WATER POLLUTION

THE MAX BRINE CONC OF 24PCT OBTAINED WITH I-STAGE FREEZING IS CONSIDERABLY LESS THAN 35PCT PRODUCED BY MULTI-EFFECT EVAPORATION AT VAAP. THIS AND ADDL SOLIDS SEPARATION PROBLEMS ARE SERIOUS DRAWBACKS TO USE OF THIS TECHNOLOGY FOR RED H20 CONCENTRATNS

5 76 4114 P33
REMOVAL OF NO-X AND TNM FROM NITRATION FUMES

P04 AND P33 COMBINED IN FUNDING. INSTALLATION COMPLETED AND OPERATING PROCEDURES WRITTEN. BECAUSE THE RADFORD TNT LINE WILL NOT RUN UNTIL 1981 FINAL TESTING NOT COMPLETED.

5 76 4114 P35
BIOLOGICAL WASTEWATER TREATMENT PILOT PLANT (RAAP)

ACTIVATED SLUDGE BIOLOGICAL TREATMENT NOT SUITABLE BECAUSE OF FLUCTUATIONS IN QUANTITY AND COMPOSITIONS OF WASTEWATER. ROTATING BIOLOGICAL SURFACE TREATMENT PROCESS PROVIDED EXCELLENT TREATMENT. POD REMOVAL GRTR THAN 94PCT- COD REMOVAL 85-PLUS PCT.

5 75 4136
DEVELOPMENT OF A GENERALIZED MATH MODEL

THIS PROJECT IS COMPLETE. THE EFFORT TO EXTEND THE MUNITIONS EFFECTIVENESS METHODOLOGY WAS COMPLETED. A SYSTEM OF COMPUTER PROGRAMS HAS BEEN DEVELOPED FOR PERFORMING BAYESIAN RELIABILITY ASSESSMENTS ON COMPLEX SYSTEMS BASED ON COMPONENT DATA.

5 76 4136
DEVELOPMENT OF A GENERALIZED MATH MODEL

THIS PROJECT IS COMPLETE. A COMPUTERIZED RAM DATA BASE TAILORED TO IMPLEMENT THE GENERALIZED MATH MODEL TECHNIQUES WAS ESTABLISHED. THE MODEL RELATES ACTUAL SYSTEM PERFORMANCE TO ALTERNATE DESIGNS, DESIGN PARAMETERS AND REQUIREMENTS.

5 79 4137
AUTOMATED LOADING OF CENTER CORE IGNITERS

THIS IS FINAL 301 REPORT. INDEPENDENT FEASIBILITY STUDIES WERE CONDUCTED BY ARRADCOM AND INAAP. RESULTS WERE FORWARDED TO PBM FOR EVALUATION AND FOLLOW ON DESIGN AND FABRICATION. FINAL TECHNICAL REPORT DUE MAR 81.

PROJECTS COMPLETED IN 2ND HALF, CY80
(CONTINUED)

5 74 4147
COMPUTER CONTROL APPLICATION TO CONTINUOUS TNT MANUFACTURE

AN ELECTRONIC ANALOG CONTROL SYSTEM CAPABLE OF MONITORING AND CONTROLLING SIGNIFICANT PROCESS VARIABLES HAS BEEN DESIGNED, PROCURED, AND INSTALLED ON TNT LINE C AT RADFORDAAP. SYSTEM EVALUATION WILL OCCUR AT SUCH TIME AS THE LINE ITSELF IS RESTARTED.

5 79 4163
CONTROLLED PROD LOADING SYS F/105MM HEAT-T M456A1

FINAL STATUS REPORT WAS SUBMITTED. PROCESS PARAMETERS AND PROCEDURES FOR LOADING THE 105MM HEAT-T M456A1 PROJECTILE ARE BEING IMPLEMENTED IN PROTOTYPE LINE AT MILAN AAP.

5 79 4189
HIGH FRAGMENTATION STEEL PRODUCTION PROCESS

THIS PHASE 1 PROJECT IS COMPLETE EXCEPT FOR THE TECHNICAL REPORT. RESULTS WILL BE UTILIZED IN SUBSEQUENT PHASES. INTERIM TECHNICAL REPORT SCHEDULED FOR JUNE 30, 1981 COMPLETION.

5 79 4194
IMPROVED PROCESS F/PRESSING LX-14 EXPL CHARGES

PRESSES WERE MADE OPERATIONAL. TOOLING FOR PRESSING TOW WARHEADS WAS DESIGNED. FURTHER WORK ON THIS PROJECT WAS TERMINATED SINCE TECHNOLOGY FOR PRODUCING LX-14 ADVANCED MAKING THE ORIGINAL OBJECTIVES OBSOLETE.

5 80 4200
TNT CRYSTALLIZER FOR LARGE CALIBER MUNITIONS

PROGRAM WAS TERMINATED TO DEVELOP A CONTINUOUS SYSTEM TO CONTROL MOLTEN TNT POUR TEMPERATURES AND INCORPORATION OF SOLIDS. REDUCED PROJECT WAS COMPLETED AFTER SYSTEM REQUIREMENTS WERE ESTABLISHED AND A SCOPE OF WORK WAS PREPARED.

5 77 4211
MOD OF PROCESS CONTROL OF EXPLOSIVE COMPOSITIONS

A RDX/TNT EXPLOSIVE GUAGE WAS DEVELOPED TO MEASURE CONCENTRATION TO A PRECISION OF 1 PERCENT. AN IMPACT SENSITIVITY TESTER WAS DEVELOPED WHICH WILL PROVIDE MORE RAPID EVALUATION OF LARGER SAMPLE SIZES.

PROJECTS COMPLETED IN 2ND HALF, CY80
(CONTINUED)

5 77 4223
APPLICATION OF ULTRASONIC ENERGY TO DOUBLE-BASE PROP PROC

ENHANCED EXTRUSION WITH ULTRASONIC DIE ACTIVATION DEMONSTRATED ON PILOT SCALE BUT NOT AS PROTOTYPE. PROBLEMS WITH MECHANICAL AND ELECTRONIC COMPONENTS. LIVE EXTRUSION RUNSWITH N5 PROPELLANT ON PROTOTYPE DID NOT SHOW EXTRUSION IMPROVEMENT. ONLY N5 CKD

5 79 4225
RED WATER POLLUTION ABATEMENT SYSTEM

FILTER CAKE DRYING TESTS WITH VERTI-STAK DRYER PROVIDED EXCELLENT DRYING WITHOUT PRODUCT LOSS. HAZARDS ANALYSIS OF RED WATER ABATEMENT COMPLETED BY RADFORDAAP. PORCUPINE PROCESSOR AND DOUBLE DRUM DRYER PROVIDED CONCENTRATED RED WATER FEEDSTOCKS.

5 80 4236
AUTO LACE JACKETS FOR CENTER CORE CHARGES

PROJECT TERMINATED AND REDUCED BY $557.0. FINAL REPORT DATED 12/01/80.

5 78 4249
SEPARATION OF EXPLOSIVES FROM SPENT ACID/WATER SLURRIES

THE BIRD-PANNEVIS FILTER WAS OPERATED SINCE JULY 1980. PROBLEMS WERE ENCOUNTERED WITH FILTER CLOTH BLINDING, LINE COATING, VALVE DIAPHRAGM FAILURE. PROCESSING WAS MODIFIED AND BUTTERFLY VALVES ORDERED TO ELINATE THE PROBLEMS.

5 78 4252
IMPROVE PRESENT PROCESSES FOR THE MANUFACTURE OF RDX + HMX

REACTION PROMOTERS, HEXAMINE AND PARAFORMALDEHYDE WERE STUDIED IN PILOT PLANT. THROUGHPUT OF HMX INCREASED 16.4 PERCENT BY USE OF HEXAMINE. PARAFORMALDEHYDE INCREASED THROUGHPUT BY 11 PERCENT. A FINAL TECHNICAL REPORT HAS BEEN PREPARED.

5 79 4263
AUTO PILOT LINE F/CONT COOL AND PROC OF HE LD PROJ

FINAL STATUS REPORT COVERED SUCCESSFUL PILOT PLANT OPERATIONS OF AUTO REMOTE MELT POUR AND COOLING OF 155MM M107 PROJECTILES. PROCESS WAS FINALIZED, BENEFITS WERE CITED AND TECH DATA WAS TRANSFERRED FOR FACILITY PROJECT DESIGNS AT FIVE LAP PLANTS.

5 77 4281
ENERGY SAVING AT ARMY AMMO PLANTS

SEE THE FOLLOWING INDIVIDUAL TASKS FOR WORK STATUS.

5 77 4281 A01
PROCESS ENERGY INVENTORY

FINAL REPORTS WERE RECEIVED FROM BOTH HAAP AND RAAP WHICH COVERED PROCESS ENERGY INVENTORY. AREAS OF POTENTIAL ENERGY SAVINGS WERE IDENTIFIED. THE CLOSER CONTROL OF STEAM USAGE IN THE SOLVENT RECOVERY SYSTEM AT RAAP YIELDED AN ANNUAL SAVING OF $58K.

5 77 4281 A04
WASTE HEAT FROM CHEMICAL REACTIONS

AN ANALYSIS WAS COMPLETED BY TRW, INC OF THE ENERGY-INTENSIVE PROCESS OPERATIONS AT RAAP, HAAP, AND VAAP. THE ANALYSIS INCLUDED ENERGY/COST SAVING PROJECTIONS AS WELL AS SPECIFIC DESIGN APPROACHES AND ENGINEERING COST ESTIMATES FOR EACH OPERATION.

5 77 4281 A08
CAVITATIONAL REMOVAL OF EXPLOSIVES

REMOVAL OF EXPLOSIVES FROM PROJECTILES USING A CAVITATING JET WAS DEMONSTRATED TO BE SAFE AND CONSIDERABLY MORE EFFICIENT THAN COMPETING METHODS. A NOZZLE DSN AND OPN COND WERE ESTAB WHICH WILL BE USLD AS THE FIRST TRIAL DURING THE PILOT PLANT PHASE.

5 77 4281 B02
REDUCED FORGING TEMPERATURE

NO CHANGE FROM PRIOR REPORTING PERIOD. PROJECTED SAVINGS FOR PROJECTILE METAL PARTS FACILITIES AT MOBILIZATION PRODUCTION RATES ARE ESTIMATED TO BE $1,666,000 PER YEAR.

5 78 4288
EXPLOSIVE SAFE SEPARATION AND SENSITIVITY CRITERIA

ZERO PALLET SPACING ESTABLISHED FOR 155MM M483HE PROJECTILE. PROJECTILE DISTANCES ESTABLISHED FOR SHIELDED AND UNSHIELDED M549 HERA PROJECTILES. WEIGHT UNITS OF NITROGUANIDINE AND GUANIDINE NITRATE TESTED. FLAKED TNT TESTING COMPLETED.

PROJECTS COMPLETED IN 2ND HALF, CY80
(CONTINUED)

5 7T 4301
ACCEPT PLAN FOR CONTINUOUSLY PROD MULTIBASE CANNON PROP-CAM

NO SIGNIFICANT EFFORT HAS BEEN EXPENDED ON THIS PROJECT DURING THIS REPORT PERIOD. THIS PROJECT IS COMPLETED, HOWEVER WORK CONTINUES UNDER PROJECT 5774301.

5 76 4301
ACCEPT PLAN- CONT PRODUCTION MULTI-BASE CANNON PROPELLANTS

NO SIGNIFICANT EFFORT HAS BEEN EXPENDED ON THIS PROJECT DURING THIS REPORT PERIOD. THIS PROJECT IS COMPLETED, HOWEVER WORK CONTINUES UNDER PORJECT 5774301.

5 77 4303
ACCEPTANCE OF CONTINUOUSLY PRODUCED BLACK POWDER

NO NEW ACCOMPLISHMENTS TO REPORT FOR THIS REPORT PERIOD, UNDER THIS FISCAL YEAR OF FUNDING. REFERENCE IS MADE TO PROJECT 5764303 FOR CONTINUATION OF WORK. THIS IS A FINAL STATUS REPORT.

5 78 4322
CHARACTERIZE DORMANCY EFFECT ON ELECTRONIC EQUIPMENT

TEST AND EVALUATION PLAN DETAILING THE METHODOLOGY OF ASSESSING THE OPERATIONAL INTEGRITY OF A ELECTRONIC PROCESS CONTROL SYSTEM HAS BEEN DEVELOPED. THE METHODOLOGY FOR PROPERLY BRINGING AN EPCS ON LINE HAS BEEN DEVELOPED. WORK CONTINUED ON 5794322.

5 79 4332
IMPROVEMENTS FOR POTTING ELECTRONIC ASSEMBLY FOR GATOR

AEROJET ORDNANCE CO. EVALUATED NEW POTTING MATERIALS + ENCAPSULATION PROCESSES FOR SCATTERABLE MINES. NEW POTTING TECHNIQUES + ARNCO'S SUPERIOR FASTCAST T70D EPOXY REDUCED LABOR TIME + INCREASED YIELD. NEED FOR MOLDS WAS ELIMINATED.

5 76 4337
ALTERNATE MATERIALS FOR CURING/MOLDING PROCESS F/AP MINES

STUDY OF EFFECT OF ATC-3 ON CURE TIME OF ADAM ENCAPSULANT SHOWED REDUCED FLEX STRENGTH AND CURE TIME MAKING ATC-3 UNACCEPTEBLE. UVRADIATION CURE OF OTHER FASCAM ENCAPSULANTS RESULTS IN UNACCEPTABLE PROCESS TEMPS. IN-SITU BONDING FOR GATOR MINES DROPD

PROJECTS COMPLETED IN 2ND HALF, CY80
(CONTINUED)

5 76 4338
DEV AUTO PROCESS + PROTO EQUIP FOR LAP OF M483 155MM PROJO

MACHINE FAILED DEMONSTRATED TESTS. CONTRACT FUNDS FULLY EXPENDED. CONTRACTOR OFFERED TO MAKE THE MAJOR COMPONENT OF MACHINE OPERABLE, USING CORPORATE FUNDS ONLY. ARRADCOM WILL REWORK TWO AUXILLIARY COMPONENTS AT THE SAME TIME.

5 77 4362
REHEAT OF LARGE CAL PROJECTILES TO ELIMINATE BASE SEPARATN

FINAL STATUS REPORT WAS SUBMITTED. CONTROLLED COOLING PROCESSES WERE SUCCESSFUL ON 155MM M549 AND XM795 AND 8IN M650 PROJECTILES. XM795 PROCESS WAS IMPLEMENTED FOR TNT LOADING OF ALL DTII PROJECTILES AT LOUISIANA AAP.

5 78 4447
NITROGUANIDINE PROCESS CONTROL ANALYTICAL SYSTEMS

PROJ WAS COMPLETED. ANALYTICAL METHODS WERE ESTABLISHED FOR NQ PRODUCTION PROCESS CONTROL. THESE INCLUDED CHROMATOGRAPHIC, COLORIMETRIC AND PLOARIGRAPHIC METHODS FOR CA, CARBONATE, CYANIMIDE,' FLUORIDE, GUANIDINIUM, SLUFATE, AND SULFUR.

5 78 4449
PROCESS IMPROVEMENT FOR COMPOSITION C-4

WORK COMPLETED. IT WAS DETERMINED THAT M112 DEMO BLOCKS & M18A1 MINE BLOCKS COULD BE EXTRUDED FROM COMP C-4 WITH NOMINAL CLASS 1/NOMINAL CLASS 5 RDX IN LIEU OF CLASS 1/CLASS 5 RDX. EXISTING SPECS HAVE BEEN AMENDED TO INCLUDE USE OF NOM CL 1/NOM CL 5.

5 78 4462
MODERNIZED FAD FOR MULTI-BASE PROPELLANTS

WORK COMPLETED. A BAY WAS SELECTED AND MODIFIED FOR EVALUATION. A CAUSTIC SCRUBBER FOR NG REMOVAL WAS PROCURED AND SPECIFICATIONS FOR THE SOLVENT ABSORBER WERE COMPLETED. TEMPERATURE DISTRIBUTION WITHIN THE BAY TO BE MODERNIZED WAS DETERMINED.

5 78 4466
EVAL TNT, CYCLOTOL, AMATEX, OCTOL IN MELT POUR FACILITIES

FINAL STATUS REPORT COVERED EFFORTS TO CONTROL SOLIDS IN TNT SLURRIES. TESTS SHOWED NO CORRELATION BETWEEN %SOLIDS AND VISCOSITY. NAVY EQUIP REVIEWED BUT NOT ADOPTED. POUR OF CYCLOTOL UNSUCCESSFUL DUE TO PLUGGED LINES OF SETTLED RDX.

PROJECTS COMPLETED IN 2ND HALF, CY80
(CONTINUED)

5 78 4469
AUTOMATED INSERTION OF GRENADE LAYERS.

THE DESIGN AND FABRICATION OF INSPECTION DEVICES FOR THE AUTOMATED INSERTION SYSTEM WERE SUCCESSFULLY DEMONSTRATED AND WILL BE USED IN THE PROTOTYPE SYSTEM. THE DESIGN OF THE PREPACK DELIVERY SYSTEM AND THE GRENADE INSERTION SYSTEM WAS COMPLETED.

5 78 4498
CONSOLIDATION + AUTOMATIC ASSEMBLY OF SMALL MINES

A PROCEDURE FOR LOADING THE M74 GEMSS ANTI-PERSONNEL MINE HAS BEEN DEVELOPED. TECHNICAL SPECIFICATIONS WERE PREPARED FOR AN ELECTRONIC LENS TESTER AND AUTOMATED SOLDERING MACHINE. IN LIEU OF AUTOMATED/MECHANIZED ASSEMBLY, MECHANIZED LAP WAS SELECTED

5 78 4508
PROCESS IMPROVEMENT OF PRESSABLE RDX COMPOSITIONS

AN IMPROVED PROCESS FOR PRODUCING COMP A-5 WAS DEVELOPED. 100,000 LBS OF A-5 HAVE BEEN PRODUCED AND SHIPPED FOR EVALUATION. A FINAL REPORT ON IMPROVED PROCESSES FOR PRESSABLE RDX COMPOSITIONS WAS ISSUED.

5 79 6553
ADAPT ACOUSTIC ANALYSIS/INSPECT WELDED OVERLAY BANDS-ARTYSHL

THIS TASK HAS BEEN COMPLETED. THE ACOUSTIC ANALYSIS CONCEPT WAS PROVEN TO BE FEASIBLE FOR INSPECTION OF WELDED OVERLAY BANDS.

5 76 6628
AUTOMATED INSPECT. OF M.T. FUZE COMPONENTS-MOVE. PLATES-

AN AUTOMATED NON-CONTACT INSPECITON MACHINE WAS DEMONSTRATED FOR INSPECTION OF THIN MOVEMENT PLATES. THE MACHINE CONSISTS OF A DIGITALIZER, COMPUTER CONTROL SYSTEM AND AN ILLUMINATING SYSTEM. SYSTEM HAS SHORTCOMINGS WHICH CAN BE CORRECTED.

5 78 6654
NDT FOR QC IN MFGR OF ADVANCED FRAGMENTING STEEL SHELLS

THIS TASK HAS BEEN COMPLETED. THIS SYSTEM WAS SUCCESSFULLY DEMONSTRATED. THE SYSTEM HAS BEEN DELIVERED TO ARRADCOM FOR INSTALLATION & FURTHER TESTING.

PROJECTS COMPLETED IN 2ND HALF, CY80
(CONTINUED)

5 77 6678
EVALUATION OF AQUA QUENCH UNDER PRODUCTION CONDITIONS

QUENCH CRACKING OCCURRED IN BOTH THE 155MM M107 AND M483 PROJECTILES BY THE AQUA QUENCH HEAT TREATMENT METHOD. SYNTHETIC WATER BASED QUENCHANTS ARE THEREFORE NOT RECOMMEDED FOR PROJECTILE HEAT TREATMENT.

5 78 6683
PRODUCTION OF TUNGSTEN BASE ALLOY PENETRATORS FOR AP MUNIT

SEVERAL TECHNICAL REPORTS WERE PREPARED AND PRESENTED AT THE CHARLOTTEVILLE SECOND ANNUAL KINETIC ENERGY SYMPOSIUM.

5 78 6693
BALL PROPELLANT DETERRENT COATING-CAM RELATED

DESIGN OF SYSTEM TO MODIFY EXISTING PILOT PLANT EQUIPMENT AND IMPROVE PROCESS CONTROL SYSTEM COMPLETED. ALL WORK NOW COMPLETE ON THIS PROJECT.

5 78 6736
TECH READINESS ACCEL THRU COMPUTER INTEGRATED MFG (CAD)

NO NEW ACCOMPLISHMENTS TO REPORT FOR THIS REPORT PERIOD, UNDER THIS FISCAL YEAR OF FUNDING. THIS IS A FINAL STATUS REPORT FOR THIS PROJECT. WORK IS CONTINUING UNDER PROJECT 5806736.

5 79 6736
TECH READINESS ACCEL THRU COMPUTER INTEGRATED MFG (CAD)

THE BASIC COMPUTER INPUT REQUIREMENTS WERE DESIGNED AND COMPLETED FOR THE TOOLING WEDGE DATA BASE SYSTEM. THIS IS A FINAL STATUS REPORT FOR THIS PROJECT. WORK IS CONTINUING UNDER PROJECT 5806736.

5 78 6760
DRYING OF LOW DENSITY BALL PROPELLANT

FLUID BED DRYING DETERMINED TO BE MORE FEASIBLE THAN MICROWAVE DRYING. PRELIM HAZARDS ANALYSIS CONDUCTED. SCOPE OF WORK FOR PURCHASE OF FLUID BED DRYING SYSTEM PREPARED. 160 LBS OF LOW DENSITY BALL PROPELLANT PURCHASED FOR USE IN PLANNED DRYING TESTS

ARRADCOM-ARRCOM (WPNS)

6 78 3901
MANUFACTURE OF FLUIDIC AMPLIFIERS BY COLD FORMING

THIS PROJECT HAS BEEN COMPLETED. RESULTS HAVE DEMONSTRATED THAT FINEBLANKING CAN BE SUCCESSFULLY USED TO MANUFACTURE HIGH-QUALITY FLUIDIC AMPLIFIER LAMINATES. MORE DEVELOPMENT IS NEEDED BEFORE IT CAN BE CONSIDERED A RELIABLE PRODUCTION TECHNIQUE.

6 73 7087
APPL. OF HIGH FREQ. INDUCTION HEATING FOR HOT COIL SPRINGS

A METHOD WAS DESIGNED AND DEVELOPED TO COIL SPRINGS BY HIGH FREQUENCY INDUCTION HEATING. THE XM-1 RECOIL SPRING AND SPRING NO.5172634 FOR THE M101-A1 WERE FABRICATED. THE PROJECT WAS COMPLETED.

6 79 7213
HIGH SPEED CHROME PLATING TECHNIQUE

PROJECT RESULTED IN A MORE SUITABLE APPROACH TO HIGH SPEED CHROME PLATING. A FULL LENGTH NON-CONFORMING ANODE IS USED. A TDP WAS PREPARED WHICH INCLUDES DESIGN OF EQUIPMENT, SPECIFICATION REQUIREMENTS AND PROCESS PROCEDURES. PROJECT IS COMPLETED.

6 77 7313
SIMULATOR FOR PRODUCTION TESTS OF WEAPONS- CAM

THIS PROJECT IS COMPLETE. A PASSIVE SIX-DEGREE-OF-FREEDOM SIMULATOR WAS SUCCESSFULLY DEVELOPED. THIS SIMULATOR PROVIDES DOD WITH A SOPHISTICATED, ECONOMICAL MEANS TO TEST THE INTERACTION BETWEEN WEAPONS, MOUNTS, AND THE SYSTEM.

6 77 7485
APPLICATION OF CHEMICAL PROCESSES TO IMPROVE SURFACE FINISH

105MM SPECIMENS WERE ELECTROPOLISHED USING THE CONFORMING ANODE. METAL REMOVAL WAS UNIFORM AND THE PROJECTED RATE OF REMOVAL AND SURFACE SMOOTHNESS WERE ACHIEVED.

6 75 7589
AUTO TARGETING SYS FOR PRODUCTION TEST OF AUTO WPN + AMMO

THIS PROJECT IS COMPLETE. A NEW CONCEPT FOR AUTOMATICALLY SCORING SMALL CALIBER TARGETS WAS DEVELOPED. THE TARGETING SYSTEM WAS INSTALLED AND IS IN USE. THE TECHNICAL DATA PACKAGE DEVELOPED FOR THIS SYSTEM IS AVAILABLE.

PROJECTS COMPLETED IN 2ND HALF, CY80
(CONTINUED)

6 77 7711
ELECTROPOLISHING PROCESS MODELS FOR SMALL BORE WEAPONS

NEW ELECTROPOLISHING CONDITIONS FOR SEVERAL GUN BARREL MATERIALS TO OBTAIN SMOOTH AND ADHERENT CHROMIUM PLATING WERE EVALUATED. THE METHODS ARE SUMMARIZED FOR ROUTINE BATH CONTROL AND ANALYTICAL PROCEDRUES FOR ELECTROPOLISHING SOLUTIONS.

6 78 7726
APPLICATION OF COLD AND WARM ROTARY FORGING

THE COLD FORGING TRIALS WILL BE ASSIMILATED IN THE FY79 PORTION OF THIS EFFORT.

6 78 7802
ESTABLISH MACHINE TOOL PERFORMANCE SPECIFICATIONS

THIS PROJECT HAS BEEN COMPLETED. INITIAL SAVINGS OF NEARLY $67,000 HAVE BEEN IDENTIFIED WITH THE SPECIFICATION OF DEEP HOLE DRILLING AND BORING EQUIPMENT. FINAL TECHNICAL REPORT WILL BE DISTRIBUTED BY APRIL 1981.

6 79 7948
ESTABLISH CUTTING FLUID CONTROL SYSTEM

THE WORK ON PHASE I HAS BEEN COMPLETED. SEVERAL AREAS OF POTENTIAL COST REDUCTION WERE IDENTIFIED. ADDITIONAL DATA IS NEEDED TO ESTABLISH REQUIREMENTS FOR CUTTING FLUID CONTROL SYSTEM FOR ROCK ISLAND ARSENAL. SPECIFIC IMPROVEMENTS HAVE REDUCED COSTS.

6 79 7965
DIFFERENTIAL SCATTEROMETRY FOR MICROFINISH SURFACES

ELECTRONIC BREADBOARD DESIGN AND ASSEMBLY IS NOT POSSIBLE DUE TO LAPSE OF FUNDING. THIS PROJECT HAS BEEN TERMINATED BUT IS STILL INCOMPLETE.

6 79 8004
CO-DEPOSITION OF SOLID LUBRICANTS DURING ANODIZING

A SURVEY OF VARIOUS COATING PROCESSES WAS MADE. EVALUATION OF SOLUTIONS AND COATINGS WAS COMPLETED. CHARGED LUBRICANT PARTICLES WERE CO-DEPOSITED ONTO 7075-T6 ALUMINUM ALLOYS DURING HARDCOAT ANODIZING.

PROJECTS COMPLETED IN 2ND HALF, CY80
(CONTINUED)

6 78 8047
PASS THRU STEADY RESTS FOR TUBE TURNING

ALL GENERAL ENGINEERING REQUIREMENTS HAVE BEEN COMPLETED. DESIGNS HAVE BEEN INCORPORATED INTO A PROCUREMENT SPECIFICATION PACKAGE FOR AN FY80 FOLLOW-ON PROJECT.

6 79 8107
CREEP FEED CRUSH FORM GRINDING.

TEST SPECIMENS WERE EVALUATED, ENGINEERING DATA WAS OBTAINED, AND DATA HAS BEEN EVALUATED AND SUMMARIZED FOR ENGINEERING SPECIFICATION PREPARATION.

TOTAL PROJECTS COMPLETED IN 2ND HALF, CY80 118

MMT PROGRAM

SUMMARY PROJECT STATUS REPORT

MANUFACTURING METHODS AND TECHNOLOGY PROGRAM

SUMMARY PROJECT STATUS REPORT

The Summary Project Status Report for each major Army subcommand (SUBMACOM) is preceded by the tabulated SUBMACOM MMT project funding status. The accuracy of funding amounts is based on the individual project status reports. The status as reported here is the IBEA condensation of information contained in the report or other comments as deemed useful. If a status report was not provided, a pertinent comment was made so that the project would be printed.

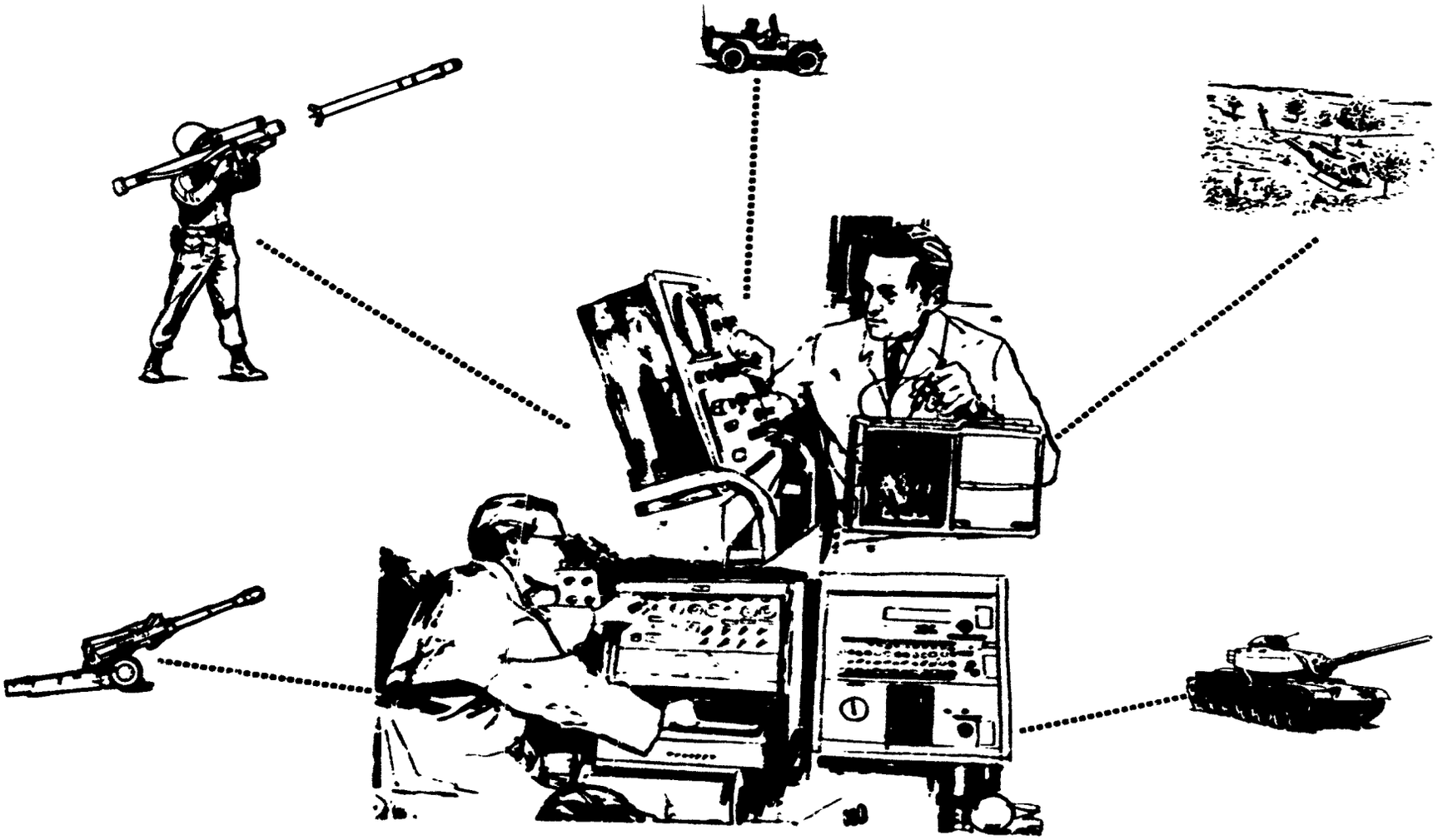

TEST AND EVALUATION COMMAND
(TECOM)

TEST AND EVALUATION COMMAND

CURRENT FUNDING STATUS, 2ND CY80

FISCAL YEAR	NO. OF PROJECTS	AUTHORIZED FUNDS ($)	CONTRACT FUNDING ALLOCATED ($)	CONTRACT FUNDING EXPENDED ($)	INHOUSE FUNDING REMAINING ($)	INHOUSE FUNDING EXPENDED ($)
79	1	881,000	56,900	56,900 (100%)	824,100	764,000 (92%)
80	1	822,000	141,100	118,800 (64%)	680,900	667,200 (97%)
81	1	850,000	0	0 (0%)	850,000	0 (0%)
82	0	0	0	0 (0%)	0	0 (0%)
TOTAL	3	2,553,000	198,000	175,700 (88%)	2,355,000	1,431,200 (60%)

AUTHORIZED FUNDING CONTRACT ALLOCATED 8% INHOUSE REMAINING 92%

MANUFACTURING METHODS AND TECHNOLOGY PROGRAM
SUMMARY PROJECT STATUS REPORT
2ND SEMIANNUAL SUBMISSION BY AC FCS DRCMT-201

PROJ NO.	TITLE & STATUS	AUTHORIZED ($000)	CONTRACT VALUES ($000)	EXPENDED LABOR AND MATERIAL ($000)	ORIGINAL PROJECTED COMPLETE DATE	PRESENT PROJECTED COMPLETE DATE
0 79 5071	TECOM TEST METHODOLOGY ENGINEERING MEASURES SEE SUBTASK BELOW FOR PROJECT STATUS.	881.0	56.0	764.0	SEP 80	JUN 82
0 79 5071 36	IN-MOTION RADIOGRAPHY TECHNIQUE APPLICATION THE FEASIBILITY OF AN X-RAY TRIGGER HAS BEEN DEMONSTRATED. MAJOR COMPONENTS & EQUIPMENT HAVE BEEN ACQUIRED AND ARE BEING ASSEMBLED FOR FIELD TESTING. THE RADIATION FIELD INTENSITY PATTERN PRODUCED BY THE 2.5 MV FLASH X-RAY UNIT WAS DOCUMENTED.					JUN 82
0 79 5071 37	MILITARY VEHICLE ROLL OVER TESTS THE PROPERTIES OF DESIGN & OPERATIONS WHICH CONTRIBUTE TO THE PROPENSITY OF MILITARY VEHICLES TO ROLL-OVER DURING TEST MANEUVERS OR REAL OPERATIONS WERE ANALYZED. FIVE VEHICLES WERE IDENTIFIED AS HAVING HIGH ROLL-OVER CHARACTERISTICS.					JUN 82
0 79 5071 42	IMPROVED CRUSHER GAGES A PROTOTYPE GAGE WAS DEVELOPED & TESTED UNDER LABORATORY CONDITIONS, WHERE IT PERFORMED WELL. HOWEVER, IT DID NOT PERFORM AS PREDICTED WHEN SUBJECTED TO WEAPON FIRING TESTS. THE PROTOTYPE HAS BEEN REEVALUATED, AND A NEW GAGE IS BEING FABRICATED.					JUN 82
0 79 5071 45	AEROSOL BIOLOGICAL PARTICLE SIZE MEAS. STANDARDIZATION REPAIRS AND CALIBRATION OF THE AUTOMATIC PARTICLE MEASUREMENT COMPUTER SYSTEM WAS COMPLETED. THE SYS YIELDED MORE REPRODUCIBLE VALUES ALTHOUGH THE DIFFERENCE BETWEEN THE MEAN WAS NOT SIGNIFICANT.					JUN 82
0 79 5071 46	FERMENTATION METHODOLOGY THE DISSOLVED OXYGEN PROBE WAS REPLACED. THE OPERATION OF THE CHILLER TO COOL & STORE BACTERIAL SLURRIES COMMENCED. THE AEROSOL CHAMBER TO DETERMINE THE AEROSOL PROPERTIES OF THE SIMULANT WAS ASSEMBLED.					JUN 82
0 79 5071 47	AVIRULENT VEE VIRUS STRAIN STANDARDIZATION FACILITIES & MEDIA FOR THE GROWTH OF TISSUE CELLS WERE ASSEMBLED. THE INITIAL ATTEMPTS TO RECOVER VIABLE HUMAN DIPLOID CELLS FROM THE STOCK RECEIVED WAS UNSUCCESSFUL.					JUN 82
0 79 5071 50	TOXIC GAS MEASUREMENTS DURING WEAPON FIRINGS THIS PROJECT IS BEING DELAYED AS THE XM-1 & DIVADS WORK HAS PRIORITY. ALSO THE EQUIPMENT IS PRESENTLY LOST FOR REPAIR.				SEP 80	JUN 82
0 79 5071 51	SAFETY EVALUATION OF AMMUNITION PREPARATORY WORK AND MEETINGS HAVE RESULTED IN THE REVISION OF 14 SPECIFIC SPEC FOR AMMUNITION TESTING. A LITER SEARCH ON SOLAR & AIR TEMPERATURE EFFECT ON AMMUNITION IN BOTH STORAGE & UTILIZATION WAS COMPLETED.				SEP 80	JUN 82

MANUFACTURING METHODS AND TECHNOLOGY PROGRAM
S U M M A R Y P R O J E C T S T A T U S R E P O R T
2ND SEMIANNUAL SUBMISSION CY 80 RCS DRCMT-301

PROJ NO.	TITLE + STATUS	AUTHO-RIZED ($000)	CONTRACT VALUES ($000)	EXPENDED LABOR AND MATERIAL ($000)	ORIGINAL PROJECTED COMPLETE DATE	PRESENT PROJECTED COMPLETE DATE
0 79 5071 52	SHOCK AND BLAST EFFECTS FROM STABALLOY PENETRATION A STUDY WAS INITIATED TO DETERMINE THE EFFECTS OF FIRING DEPLETED URANIUM PROJECTILES INTO A TARGET ENCLOSURE. THIS INFO WAS TO BE USED IN THE DESIGN OF THE TARGET ENCLOSURE TO BE BUILT. THIS EFFORT HAS BEEN TERMINATED DUE TO UNPLANNED EVENTS.				SEP 80	JUN 82
0 79 5071 53	CERTIFICATION OF LOOSE CARGO BOUNCE TEST VARIOUS MODULES CONSISTING OF 40 TUNED REED SETS WITH BONDED SN FATIGUE GAUGES AND STRAIN GAUGES HAVE BEEN BUILT. TWO TESTS ON THE PACKAGE TESTER HAVE BEEN PERFORMED AT 300 RPM. THE DATA FROM THESE TESTS HAVE BEEN ANALYZED.				SEP 80	JUN 82
0 79 5071 54	ON-LINE SEMI CONDUCTOR TESTING IN NUCLEAR ENVIRONMENT SOFTWARE HAS BEEN WRITTEN TO DETERMINE THE LOW VOLTAGE & CURRENT LIMITS FOR REMOTE TESTING. THE SOFTWARE PROGRAMS HAVE BEEN DEBUGGED.				SEP 80	JUN 80
0 79 5071 55	FAST BURST REACTOR THE TEST PROGRAM TO ESTABLISH THE CHARACTERISTICS OF THE REACTOR IN THE LARGE IRRADIATION CAVITY ARRANGEMENT WAS COMPLETED. THIS INVOLVED ESTABLISHING THE REACTIVITY VALUES OF THE COMPONENTS OF THE REACTOR CORE.				SEP 80	JUN 82
0 80 5071	PRODUCTION TEST METHODOLOGY SEE SUBTASK BELOW FOR PROJECT STATUS.	822.0	141.1	667.2	DEC 82	JUN 83
0 80 5071 01	ACCEPTANCE TEST PROCEDURES NINE ATP WERE WRITTEN. THIRTY TWO ATP WERE REVISED. ONE HUNDRED EIGHT WERE REVIEWED.				DEC 82	JUN 80
0 80 5071 10	TEST OPERATIONS PROCEDURES TWENTY TWO TOPS WERE PUBLISHED DURING THIS REPORTING PERIOD.				DEC 82	JUN 82
0 80 5071 32	ELECTROSTATIC GENERATION AND PRECIPITATION A MAN-SIZED FARADAY CAGE HAS BEEN CONSTRUCTED. INITIAL TESTS INDICATE THAT IT WILL MEASURE THE STATIC CHARGE ON A MAN-CLOTHING SYSTEM. THE PROJECT WAS DELAYED FOR 14 MONTHS DUE TO THE LACK OF FUNDS & INSTRUMENTATION REPAIRS.					JUN 83
0 80 5071 35	PROJECTILE EDDY CURRENT INSPECTION NEW EDDY CURRENT PROBES FOR THE TEST UNIT WERE RECEIVED. TEST TECH WERE DEMONSTRATED WHICH RELIABLY DETECT ARTIFICIALLY INDUCED CRACKS IN THE NOSE AREA OF PROJECTILES WITH HAND HELD PROBES.					JUN 83
0 80 5071 40	DIRECT FIRE WEAPONS ADVANCED MUZZLE BORE SIGHT TESTING & EVAL OF DATA BY A TASK FORCE WERE COMPLETED IN SEPT 1980. EVAL OF CHARACTERISTICS OF FOUR BORESIGHT DESIGNS WAS MADE. A DRAFT REPORT OF THE FINAL RESULTS IS BEING REVIEWED.					JUN 83

MANUFACTURING METHODS AND TECHNOLOGY PROGRAM
S U M M A R Y P R O J E C T S T A T U S R E P O R T
2ND SEMI-ANNUAL SUBMISSION CY 80 RCS DRCMT-301

PROJ NO.	TITLE + STATUS	AUTHO-RIZED ($000)	CONTRACT VALUES ($000)	EXPENDED LABOR AND MATERIAL ($000)	ORIGINAL PROJECTED COMPLETE DATE	PRESENT PROJECTED COMPLETE DATE
0 80 5071 45	TEST AUTOMATION DEVELOPMENT A STUDY WAS COMPLETED THAT IDENTIFIED THE EQUIP & PROCEDURES REQ TO AUTOMATE THE TESTING OF AIRBORNE AVIONICS EQUIP. THE INSTL OF AUTOMATED ANTENNA PATTERN TEST EQUIP HAS BEEN COMPLETED. THE TESTING OF THIS EQUIP HAS STARTED.					JUN 83
0 80 5071 57	GENERAL PURPOSE BIT SLICE MICRO-COMPUTER A GENERAL PURPOSE COMPUTER INTERFACE HAS BEEN DESIGNED AND PLACED ON THE ADVANCED MICRO DEVICE'S 2910 BIT SLICE MICROPROGRAM CONTROLLER CHIP. THE AMD 2910 CONTROLLER, THOUGH ABLE TO ADDRESS UP TO 4K OF MEMORY, IS CONFIGURED USING FOUR 256X8 PROMS.				DEC 82	JUN 83
0 80 5071 58	AIR VELOCITY INFLUENCES ON FUNGAL SPORE GERMINATION THE AIR VELOCITY CHAMBER WAS CONSTRUCTED, TESTED AND PROVEN EFFECTIVE. BASE LINE DATA ON BASIC GERMINATION CHARACTERISTICS OF THE INDIVIDUAL MIL-STD-810C, METHOD 508 TEST FUNGI HAVE BEEN DETERMINED.				DEC 82	JUN 83
0 80 5071 59	SOLAR POWERED INSTRUMENTATION VAN THE PROCUREMENT ACTIONS ON ALL MATL & EQUIP HAVE BEEN FINALIZED & 90% OF THE ITEMS HAVE BEEN RECEIVED. SOFTWARE PROGRAM FOR CONTROL & MONITORING OF THE HEATING, COOLING & POWER USAGE HAS BEEN WRITTEN & 80% DEBUGGED.				DEC 82	JUN 83
0 80 5071 60	RECEIVER OPERATING CHARACTERISTICS MEASUREMENTS THE PRELIMINARY LITERATURE SEARCH OF THE TEXTS & OTHER TECHNICAL DOCUMENTS HAS BEEN COMPLETED. A FAST FOURIER TRANSFORM SYS WAS ACQUIRED FOR PRELIMINARY BACKGROUND WORK APPLICABLE TO ROC INVESTIGATIONS.				DEC 82	JUN 83
0 80 5071 61	SMOKE OBSCURATION TEST PROCEDURES LACK OF PERSONNEL HAS DELAYED THIS PROJECT. HOWEVER, PRELIMINARY CONTACTS HAVE BEEN MADE WITH TECOM, DPG, AND CSL. A CURSORY REVIEW OF THE STATE OF THE ART HAS STARTED.				DEC 82	JUN 83
0 80 5071 62	DISPERSION DATA FOR AUTOMATIC WEAPONS AT LONG RANGE BACKLOGGED PROJECTS WITH HIGHER PRIORITIES HAVE BEEN ASSIGNED FOR COMPLETION AHEAD OF THIS STUDY. THIS INVESTIGATION, HOWEVER, SHOULD BE COMPLETED IN THE FIRST HALF OF CALENDAR YEAR 1981.				DEC 82	JUN 81
0 80 5071 63	BALLISTIC TEST OF HIGH HARDNESS STEEL ARMOR TESTING HAS BEEN COMPLETED ON THE STEEL PLATES. FUTURE WORK INVOLVES TESTING ANOTHER 3/4-INCH & 1-INCH PLATE FROM ANOTHER HEAT DFUSS CORP AND ANOTHER 3/4-INCH CHT STEEL PLATE. THE DATES OF AVAILABILITY OF THIS MATL ARE NOT FIRM.				DEC 82	JUN 83

MANUFACTURING METHODS AND TECHNOLOGY PROGRAM
S U M M A R Y P R O J E C T S T A T U S R E P O R T
2ND SEMIANNUAL SUBMISSION CY 80 RCS DRCMT-301

PROJ NO.	TITLE + STATUS	AUTHO-RIZED ($000)	CONTRACT VALUES ($000)	EXPENDED LABOR AND MATERIAL ($000)	ORIGINAL PROJECTED COMPLETE DATE	PRESENT PROJECTED COMPLETE DATE
0 80 5071 64	IMPROVED ENGINE WEAR ANALYSIS SAMPLES OF BOTH NEW & USED ENGINE & FINAL DRIVE OILS HAVE BEEN OBTAINED. BASELINE ANALYSES BY BOTH ATOMIC ABSORPTION SPECTROMETRY & EMISSION SPECTROMETRY HAVE BEEN COMPLETED.				DEC 82	JUN 83
0 80 5071 65	PRODUCTION/STANDARDIZATION OF COXIELLA BURNETII SLURRIES THE AD-CALIFORNIA STRAIN OF C BURNETTII WAS GROWN SUCCESSFULLY IN EMBRYONATED EGGS & PASSED IN GUINEA PIGS. PRODUCING LOTS OF YOLK-SAC SUSPENSION SUFFICIENT VOLUME TO CHALLENGE THE DETECTION INST HAD TO BE DEFERRED UNTIL PROD OF FERTILE EGGS INCREASE				DEC 82	JUN 83
0 80 5071 66	CERTIFICATION OF THE DEMILITARIZATION PROTECTIVE ENSEMBLE THE EFFORT WAS COMPLETED AND THE FINAL REPORT HAS BEEN WRITTEN.				DEC 82	JAN 81
0 80 5071 67	INTEROPERABILITY TEST METHODOLOGY HARDWARE SPEC FOR A SOFTWARE DRIVER HAVE BEEN DEVELOPED. LINK PROTOCOLS OF THE FIELD ARMY ARTILLERY, AIR DEFENSE, AND ELECTRONIC WARFARE/INTELLIGENCE TACTICAL AUTOMATED SYS HAVE BEEN STUDIED TO IDENTIFY SPECIFIC HARDWARE & SOFTWARE DRIVERS.				DEC 82	JUN 83
0 80 5071 68	MOD AND UPDATE OF HUMAN FACTORS ENGR FIELD INSTR PACKAGE THE CONTRACTOR HAS VISITED 7 TECOM PROVING GROUNDS AND HAS ADMINISTERED QUESTIONNAIRES REGARDING THE UNIQUE INSTR REQ. THE CONTRACTOR PUBLISHED A RECOMMENDED HFE INSTR PACKAGE TO MEET THE PARTICULAR NEEDS OF EA OF THE TEST AGENCIES.					JUN 83
0 80 5071 69	BACKSPALLING CHARACTERISTICS TESTING HAS BEEN COMPLETED ON DUAL HARDNESS STEEL PLATES IN THICKNESS 3/8, 1/2, & 5/8-INCHES. TEST RESULTS INDICATE THAT THE BACKSPALLING WHICH OCCURS ON 5/8-INCH PLATE MAY NOT BE ACCEPTABLE. ADDITIONAL TESTS ARE REQ ON 5/8-INCH PLATE.					JUN 83
0 80 5071 70	MEASUREMENT OF ARTILLERY PROJECTILE TIME OF FLIGHT THE NIKE-HERCULES HAS BEEN CHECKED OUT. THE IR CHRONOGRAPH HAS BEEN OBTAINED & CHECKED OUT. ALSO, THE VIDEO SYSTEM HAS BEEN OBTAINED. THE RADAR HAS BEEN INSTALLED ON SITE.					JUN 83
0 81 5071	PRODUCTION TEST METHODOLOGY ENGINEERING MEASURES THIS PROJECT WAS JUST FUNDED. NO STATUS REPORT IS REQUIRED.	650.0				

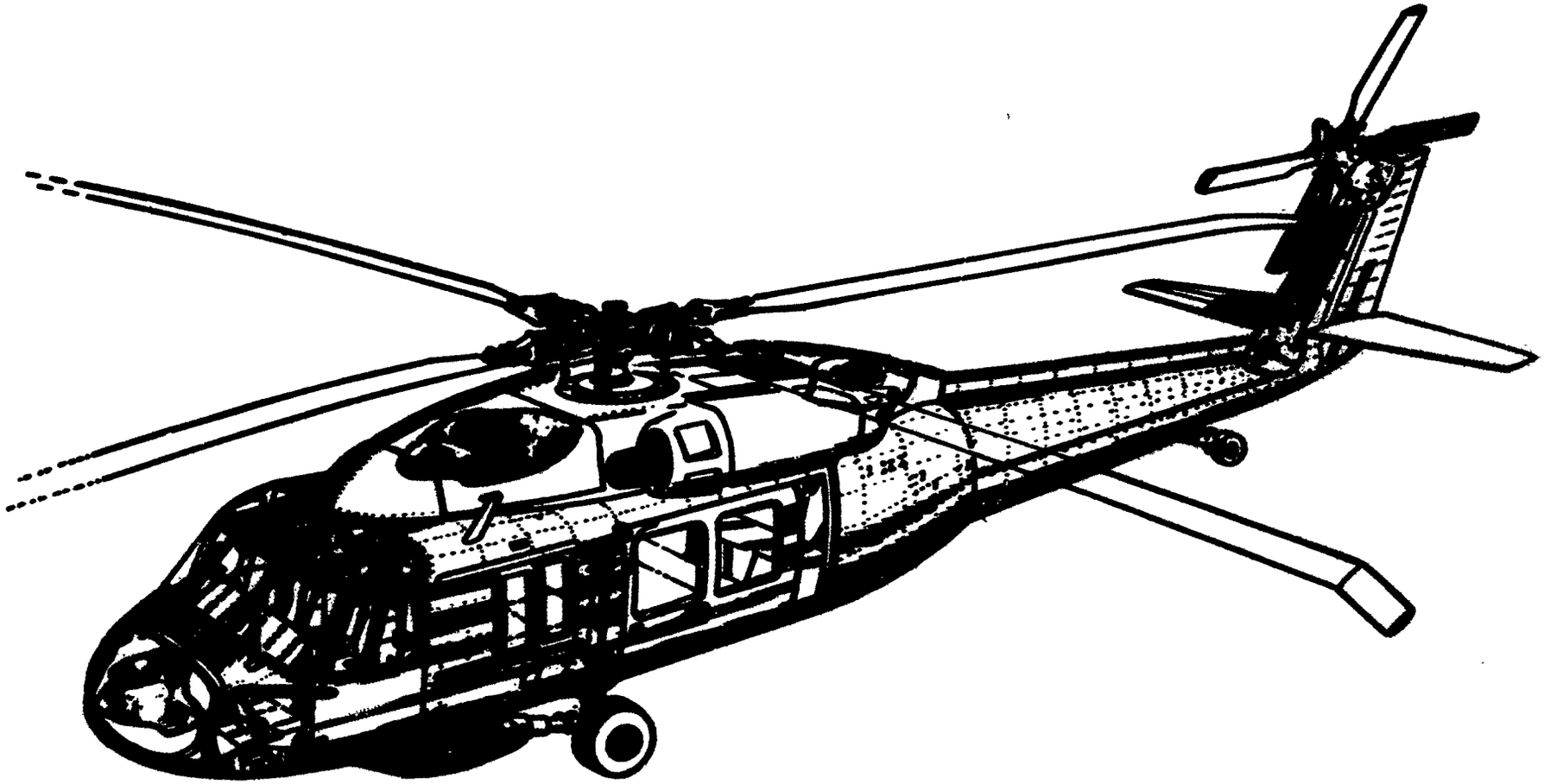

AVIATION R&D COMMAND
(AVRADCOM)

A V I A T I O N R & D C O M M A N D

CURRENT FUNDING STATUS, 2ND CY80

FISCAL YEAR	NO. OF PROJECTS	AUTHORIZED FUNDS ($)	CONTRACT FUNDING ALLOCATED ($)	CONTRACT FUNDING EXPENDED ($)		INHOUSE FUNDING REMAINING ($)	INHOUSE FUNDING EXPENDED ($)	
77	2	207,600	171,500	111,700	(65%)	36,100	35,600	(98%)
78	5	1,805,000	1,384,700	740,600	(53%)	420,300	352,900	(83%)
79	13	3,951,200	3,060,300	1,725,100	(56%)	890,900	542,800	(60%)
80	25	8,079,500	6,591,500	3,986,900	(61%)	1,680,000	581,000	(34%)
81	27	9,220,000	325,000	0	(0%)	8,895,000	37,000	(0%)
82	0	0	0	0	(0%)	0	0	(0%)
TOTAL	72	23,263,300	11,333,000	6,484,300	(57%)	11,930,300	1,549,300	(12%)

AUTHORIZED FUNDING CONTRACT ALLOCATED 49% INHOUSE REMAINING 51%

MANUFACTURING METHODS AND TECHNOLOGY PROGRAM
S U M M A R Y P R O J E C T S T A T U S R E P O R T
2ND SEMIANNUAL SUBMISSION CY 80 RCS DRCMT-301

PROJ NO.	TITLE + STATUS	AUTHO-RIZED ($000)	CONTRACT VALUES ($000)	EXPENDED LABOR AND MATERIAL ($000)	ORIGINAL PROJECTED COMPLETE DATE	PRESENT PROJECTED COMPLETE DATE
1 78 7036	ISOTHERMAL ROLL-FORGING OF COMPRESSOR BLADES THIS PHASE 2 OF THE PROGRAM IS COMPLETE. THE TECHNICAL REPORT HAS BEEN WRITTEN AND DISTRIBUTRED. THE 302 IS PUBLISHED.	425.0	375.0	50.0	JUN 79	DEC 80
1 79 7036	ISOTHERMAL ROLL-FORGING OF COMPRESSOR BLADES WORKSCOPE FOR CONTUNUING PHASES ESTABLISHED AND PLACED UNDER CONTRACT. DETAILS TO BE REPORTED UNDER PROJECT 1817036 WHICH THE WORKSCOPE SUPPORTS.	62.5		55.5	MAR 81	MAR 81
1 81 7036	ISOTHERMAL ROLL-FORGING COMPRESSOR BLADES 170.000 BEING FORWARDED TO AMMRC.	310.0				
1 78 7055	ULTRASONIC WELDING OF HELICOPTOR FUSELAGE STRUCTURES WORK HAS BEEN UNSUCCESSFUL THUS FAR. HUGHES HAS BEEN REQUESTED TO SUBMIT A NEW PROPOSAL TO REMEDY THE PROBLEMS.	441.0	338.1	72.0	JAN 79	MAY 82
1 79 7086	ABRADABLE SEALS FOR COMPRESSOR BLADE TIP APPLICATIONS FELTMETAL (FM 5155) ABRADABLE SEALS WERE ATTACHED TO SIMULATED ENGINE HARDWARE RINGS AND AN ALLISON T-63 COMPRESSOR FRONT DIFFUSER ASSEMBLY USING INHIBITED CHEM-BRASE CEMENT. THE SEAL WAS STRIPPED AND REAPPLIED. NDI TESTS ARE CURRENTLY IN PROCESS.	100.0	80.0	10.3	SEP 80	MAR 81
1 78 7091	PROCESSING AIRCRAFT COMPONENTS USING PULTRUDED MATERIALS PULTRUSION OF THE DOOR TRACK HAS BEEN UNSUCCESSFUL. THE PROPOSED SOLUTION WILL REQUIRE A CONTRACT MODIFICATION AND ADDITIONAL FUNDS. STEPS HAVE BEEN TAKEN TO ACCOMPLISH THESE CHANGES. THE IN-HOUSE EFFORT HAS BEEN ON THE PULTRUSION OF EPOXY SYSTEMS.	320.0	150.0	171.9	SEP 80	NOV 81
1 77 7106	MANUFACTURING TECHNIQUES FOR TRANSMISSION SHAFT SEALS ALL PROJECT WORK EXCEPT THE PREPARATION OF THE FINAL REPORT AND THE MANUFACTURING PROCESS SPECIFICATION HAS BEEN COMPLETED. WORK IS IN PROCESS ON THE REPORT AND SPECIFICATION.	135.0	121.5	13.5	AUG 79	MAR 81
1 81 7106	MANUFACTURING TECHNIQUES F/TRANSMISSION SHAFT SEALS FUNDS ARE BEING FORWARDED TO THE PROPULSION LABORATORY.	100.0				
1 80 7113	COMPOSITE REAR FUSELAGE MANUFACTURING TECHNOLOGY PHASE II WORK WAS CONTINUED. MANUFACTURING AND FULL-SCALE DRAWINGS ARE NEARING COMPLETION. FABRICATION OF THE TOOLING IS ALSO NEARING COMPLETION. WORK IS PROGRESSING ON FATIGUE, DETAILED STRESS, AND DAMAGE TOLERANCE ANALYSES.	960.0	910.0	25.0	DEC 80	JUN 82
1 81 7113	COMPOSITE REAR FUSELAGE MANUFACTURING TECHNOLOGY FUNDS IN THE AMOUNT OF $1.145K ARE IN THE PROCESS OF BEING FORWARDED TO ATL, FT. EUSTICE, VA.	1,350.0				

MANUFACTURING METHODS AND TECHNOLOGY PROGRAM
S U M M A R Y P R O J E C T S T A T U S R E P O R T
2ND SEMIANNUAL SUBMISSION CY 80 RCS DRCMT-301

PROJ NO.	TITLE + STATUS	AUTHO-RIZED ($000)	CONTRACT VALUES ($000)	EXPENDED LABOR AND MATERIAL ($000)	ORIGINAL PROJECTED COMPLETE DATE	PRESENT PROJECTED COMPLETE DATE
1 80 7119	NON-DESTRUCTIVE EVAL TECHNIQUES FOR COMPOSITE STRUCTURES A CONTRACT WAS LET WITH ROCKWELL INTERNATIONAL TO PERFORM A STATE-OF-THE-ART REVIEW OF ALL INPROCESS QUALITY CONTROL AND INSPECTION TECHNIQUES APPLICABLE TO THE PRODUCTION OF COMPOSITES.	300.0	59.0	171.4	SEP 82	SEP 82
1 81 7143	CERAMIC GAS PATH SEAL-HIGH PRESSURE TURBINE FUNDS IN THE AMOUNT OF $250K ARE IN THE PROCESS OF BEING FORWARDED TO THE PROPULSION LABORATORY.	300.0				
1 78 7144	T700 ENGINE NOZZLE IN-PROCESS INSPECTION ***** DELINQUENT STATUS REPORT *****	209.0	178.1	1.0	NOV 79	JUN 81
1 78 7155	MFG METHODS FOR IMPROVED HIGH PERFORMANCE HELICOPTER GEARS DESIGN OF THE PROTOTYPE GEAR ROLLER MACHINE WAS COMPLETED AND ASSEMBLY DRAWINGS ARE NEAR COMPLETION. GEAR MATERIAL WAS PROCURED. AN INITIAL DESIGN PRINT OF THE ROLLER DIE WAS COMPLETED.	410.0	343.5	58.0	NOV 80	JUL 83
1 80 7155	COST EFFECTIVE MANUFACTURING METHODS FOR HELICOPTER GEARS DESIGN OF THE PROTOTYPE GEAR ROLLER MACHINE WAS COMPLETED AND ASSEMBLY DRAWINGS ARE NEAR COMPLETION. GEAR MATERIAL WAS PROCURED. AN INITIAL DESIGN PRINT OF THE ROLLER DIE HAS BEEN COMPLETED.	200.0	126.0	74.0	JUL 81	JUL 83
1 81 7155	COST EFFECTIVE MANUF METH F/IMPVD HIGH PERF HELICOPTER GEARS 288.000 BEING FORWARDED TO AMMRC.	320.0				
1 80 7156	ULTRASONIC ASSISTED MACHINING FOR SUPERALLOYS A CONTRACT HAS BEEN AWARDED TO SONOBOND CORP FOR MODIFICATION OF ULTRASONIC EQUIPMENT USED UNDER CONTRACT DAAG 44-76-C-0059.	55.0	44.7		APR 81	APR 81
1 81 7163	SEMI-AUTO COMP MANUF SYS F/HELI FUSELAGE SECONDARY STRUC FUNDS ARE BEING FORWARDED TO ATL, FT. EUSTICE, VA.	300.0				
1 80 7197	FABRICATION OF INTEGRAL ROTORS BY JOINING PURCHASE REQUEST HAS BEEN SUBMITTED TO PROCUREMENT.	100.0		24.0	SEP 81	MAY 81
1 81 7197	FABRICATION OF INTEGRAL ROTORS BY JOINING NO WORK DONE. FUNDS JUST RELEASED.	350.0				
1 79 7199	LASER HARDENING OF GEARS, BEARINGS AND SEALS ***** DELINQUENT STATUS REPORT *****	180.0	150.0	30.0	OCT 80	MAY 82
1 80 7199	SURFACE HARDENING OF GEARS, BEARINGS AND SEALS BY LASERS EFFORTS WERE MADE TO IMPROVE DIRECTIONAL CONTROL AND FOCUS OF THE LASER BEAM, AND TO ELIMINATE IN TRANSIT BLUSHING CAUSED BY CONTAMINATION OF AMBIENT AIR. BACK TEMPERING AND NON-UNIFORM CASE DEPTH PROBLEMS STILL EXIST. NEAR TERM SOLUTIONS ARE EXPECTED	225.0	162.3	33.0	SEP 81	FEB 83

MANUFACTURING METHODS AND TECHNOLOGY PROGRAM
S U M M A R Y P R O J E C T S T A T U S R E P O R T
2ND SEMIANNUAL SUBMISSION CY 80 RCS DRCMT-301

PROJ NO.	TITLE + STATUS	AUTHO-RIZED ($000)	CONTRACT VALUES ($000)	EXPENDED LABOR AND MATERIAL ($000)	ORIGINAL PROJECTED COMPLETE DATE	PRESENT PROJECTED COMPLETE DATE
1 81 7200	COMPOSITE ENGINE INLET PARTICLE SEPARATOR FUNDS ARE IN THE PROCESS OF BEING FORWARDED TO ATL. FT. EUSTICE. VA.	350.0				
1 80 7202	APPLICATION OF THERMOPLASTICS TO HELICOPTER SECONDARY STRUCS TOOL PROOFING WAS CONDUCTED. MODIFICATION OF THE TOOLING WAS NECESSARY. AND IS IN PROCESS. ADDITIONAL COMPONENT SKIN MATERIALS. IN CLUDING PARAMETER DEFINITION WILL CONTINUE.	225.0	180.0	45.0	OCT 81	OCT 81
1 81 7202	APPLICATION OF THERMOPLASTICS TO HELICOPTER SECONDARY STRUC FUNDS ARE BEING FORWARDED TO FT EUSTICE FOR PROJECT EXECUTION.	100.0				
1 77 7238	PRECISION FORGED ALUMINIUM POWDER METALLURGY ***** DELINQUENT STATUS REPORT *****	72.6	50.0	22.1	MAR 79	JUN 81
1 79 7238	PRECISION FORGED ALUMINIUM POWDER METALLURGY ***** DELINQUENT STATUS REPORT *****	398.7	350.0	30.9	APR 81	JUN 81
1 80 7240	MACHINING METHODS FOR ESR 4340 STEEL FOR HELICOPTER APPL. AN RFQ WAS SENT TO HUGHES. THEIR REPLY WAS IN EXCESS OF AVAILABLE FUNDS. A REDUCED SCOPE OF WORK IS BEING PREPARED.	83.0				
1 79 7241	HOT ISOSTATIC PRESSING OF TITANIUM CASTINGS THREE HUBS HAVE BEEN CAST AND INSPECTED. HUBS SHOWED CONSISTENT OUT-OF-ROUNDNESS IN THE ARMS. MOLD AND CORE PATTERNS ARE BEING MODIFIED. HEAT TREATMENT STUDY AND EVALUATION OF HIP CYCLES HAS BEEN COMPLETED.	520.0	431.5	32.0	SEP 81	SEP 81
1 80 7241	HOT ISOSTATIC PRESSED TITANIUM UPON COMPLETION OF PHASE II. WORK ON PHASE III WITH FYRO FUNDS WILL BEGIN.	100.0	75.0		JUL 81	MAR 82
1 80 7243	MACHINING OPERATIONS ON KEVLAR LAMINATED CONSTRUCTIONS THE SOLICITATION REVIEW BOARD SELECTED HUGHES HELICOPTER FOR THE CONTRACT WORK.	135.0		15.0	DEC 81	JAN 82
1 79 7284	SUPERPLASTIC FORMING/DIFFUSION BONDING OF TITANIUM THE SUPERPLASTICALLY FORMED FIREWALL WAS NOT WITHIN TOLERANCES. THE CONTRACTOR PLANS TO CORRECT THESE DEFECTS DURING THE NEXT PHASE. THE CONTRACTOR WILL ALSO PREPARE A LOW COST PRODUCT TEST PLAN TO ASSURE QUALIFICATION FOR IMPLEMENTATION.	400.0	360.0	40.0	OCT 82	MAY 81
1 79 7285	CAST TITANIUM COMPRESSOR IMPELLERS DETROIT DIESEL ALLISON HAS COMPLETED PHASE I AND HAS INITIATED PHASE II. SOLAR HAS COMPLETED ABOUT 85 PERCENT OF PHASE I. DELAYS HAVE BEEN CAUSED BY SUBCONTRACTORS NOT DELIVERING CASTINGS.	300.0	175.0	54.0	FEB 80	MAY 82

MANUFACTURING METHODS AND TECHNOLOGY PROGRAM
S U M M A R Y P R O J E C T S T A T U S R E P O R T
2ND SEMIANNUAL SUBMISSION CY 80 RCS DRCMT-301

PROJ NO.	TITLE + STATUS	AUTHO-RIZED ($000)	CONTRACT VALUES ($000)	EXPENDED LABOR AND MATERIAL ($000)	ORIGINAL PROJECTED COMPLETE DATE	PRESENT PROJECTED COMPLETE DATE
1 80 7285	CAST TITANIUM COMPRESSOR IMPELLERS WORK HAS NOT BEEN INITIATED ON THIS PART OF THE EFFORT DUE TO DELAYS ENCOUNTERED IN PRIOR PROJECT.	270.0	220.0	1.5	SEP 81	DEC 82
1 81 7285	CAST TITANIUM COMPRESSOR IMPELLERS NO WORK DONE FUNDS JUST RELEASED.	200.0				
1 79 7286	SUPERALLOY POWDER PRODUCTION FOR TURBINE COMPONENTS PROBABLE SOURCES OF CONTAMINANTS HAVE BEEN IDENTIFIED AND CORRECTIVE ACTION IS BEING TAKEN. WORK IN THE AREA OF DYNAMIC OUTGASSING IS BEING EXPANDED. A METHOD FOR HAFNIUM ADDITION IN THE ELECTRON BEAM REMELTING OF INGOTS HAS BEEN DEFINED.	356.0	215.0	128.2	FEB 81	SEP 81
1 80 7286	HIGH QUALITY SUPERALLOY POWDER PRODUCTION FOR TURB. COMP. FY80 FUNDING WILL BE USED IN-HOUSE FOR ENGINEERING SUPPORT EFFORTS AS AIR FORCE MANAGED CONTRACTS NEAR COMPLETION. TO DATE, NO WORK HAS BEEN ACCOMPLISHED.	11.0			MAR 81	DEC 82
1 79 7288	OPTIMAL CURING COND. FOR PROCESS FIBER-REINFORCED COMPOSITES WORK ON THE EFFECT OF COOL-DOWN RATE AFTER CURE ON THE PHYSICAL PROPERTIES AND CHEMICAL COMPOSITION OF THE COMPOSITES WAS CONTINUED.	112.5		48.4	MAY 80	DEC 81
1 80 7288	DETERMINATION OF OPTIMAL CURING CONDITIONS FOR COMPOSITES WORK WAS INITIATED WITH A RECENTLY ACQUIRED PREPREG MACHINE TO PRODUCE CUSTOM FORMULATIONS OF GLASS/EPOXY FOR IN-HOUSE CHARACTERIZATION AND COMPARISON TO EXISTING COMMERCIAL PREPREGS. THE ULTIMATE OBJECTIVE OF THIS IS TO ESTABLISH OPTIMAL CURING.	100.0		17.6	SEP 80	SEP 82
1 81 7288	MMT DETERMINATION OF OPTIMAL CURING CONDITIONS FUNDS ARE BEING TRANSFERRED TO AMMRC.	175.0				
1 80 7291	TITANIUM POWDER METAL COMPRESSOR IMPELLER TOOLING BEING PROCURED. PREPARATIONS ARE BEING MADE FOR SHAPE TRIALS.	216.0	150.0	36.0	JUN 81	FEB 81
1 81 7291	TITANIUM POWDER METAL COMPRESSOR IMPELLER NO WORK DONE. FUNDS JUST RELEASED.	240.0				
1 79 7298	HIGH TEMPERATURE VACUUM CARBURIZING A SCOPE OF WORK HAS BEEN WRITTEN AND AN RFQ INITIATED. RATING OF BIDDERS WAS COMPLETED. PLANNED CONTRACT START IS 15 APRIL 1981	25.0		1.5	MAY 80	SEP 81
1 80 7298	HIGH TEMPERATURE VACUUM CARBURIZING THIS PROJECT SUPPORTS THE WORK PLANNED FOR THE FY79 PROJECT. PLANNED CONTRACT START IS 15 APRIL 1981.	139.0		4.4	SEP 80	SEP 82

MANUFACTURING METHODS AND TECHNOLOGY PROGRAM
S U M M A R Y P R O J E C T S T A T U S R E P O R T
2ND SEMIANNUAL SUBMISSION CY 80 RCS DRCMT-301

PROJ NO.	TITLE + STATUS	AUTHO-RIZED ($000)	CONTRACT VALUES ($000)	EXPENDED LABOR AND MATERIAL ($000)	ORIGINAL PROJECTED COMPLETE DATE	PRESENT PROJECTED COMPLETE DATE
1 81 7298	HIGH TEMPERATURE VACUUM CARBURIZING FUNDS IN THE AMOUNT OF $50,000 ARE BEING FORWARDED TO AMMRC.	250.0				
1 81 7300	IMPROVED LOW CYCLE FATIGUE CAST ROTORS NO WORK DONE. FUNDS JUST RELEASED.	350.0				
1 81 7302	PRODUCTION OF BORIDE COATED LONG LIFE TOOLS FUNDS ARE BEING HELD FOR REPROGRAMMING	200.0				
1 79 7315	LOW COST MANUFACTURE OF POISE GIMBAL MATERIAL SAMPLES OF GRAPHTEK HMSIDK/MAGNAMITE WERE FABRICATED AND TESTED. WORK WAS INITIATED ON CONFIRMATORY AND THERMAL TEST SAMPLES. THE PROJECT SCOPE WAS EXPANDED TO ADDRESS THE ELEVATION GIMBAL ALSO. PROJECT FUNDING WAS INCREASED BY $100K.	302.0	199.3	25.0	JUL 81	SEP 81
1 81 7319	PROD METH F/DIGITAL ADDRESSABLE MULTI-LEGEND DISPLAY SWITCH CONTRACT NOT YET AWARDED. PROJECT WILL AUTOMATE BONDING & ASSEMBLY METHODS FOR A MODULAR THIN FILM ELECTROLUMINESCENT DISPLAY SWITCH. ETCHED COPPER/KAPTON FILM USED AS HYBRID SURFACE & CIRCUIT INTERCONNECT WILL BE BONDED TO THE GLASS DISPLAY ELEMENT.	45.0		5.0	OCT 83	OCT 83
1 81 7322	LOW COST TRANSPIRATION-COOLED COMBUSTOR LINER NO WORK DONE. FUNDS JUST RELEASED.	100.0				
1 79 7338	COMPOSITE TAIL SECTION TASK 1, DESIGN REFINEMENTS, HAS SLIPPED. DESIGN IS NOT FINALIZED ON STABILATOR AND VERTICAL FIN. FABRICATION REFINEMENTS FOR CURE CYCLE, PROCESSING, BUILD-UP, AND TOOLING OPTIMIZATION ARE CONTNUING.	980.0	887.0	87.0	JUL 80	NOV 81
1 80 7338	COMPOSITE TAIL SECTION A CRITICAL PROGRAM REVIEW WAS HELD AUG 80 TO ASSESS ALL WORK PRIOR TO GIVING HUGHES PERMISSION TO PROCEED WITH FABRICATION. PRELIMINARY TOOLING FABRICATION WAS INITIATED ON THE TAIL BOOM. FABRICATION TO BE DONE AT FIBER SCIENCE, SALT LAKE, UTAH.	960.0	809.0	80.0	JUL 82	JUL 82
1 81 7338	COMPOSITE TAIL SECTION FUNDS ARE IN THE PROCESS OF BEING FORWARDED TO AVRADCOM PROCUREMENT.	1,090.0				
1 80 7339	FILAMENT WOUND COMPOSITE FLEXBEAM TAIL ROTOR TAIL ROTORS HAVE BEEN FABRICATED. THE BLADES DISPLAYED GOOD APPEARANCE, AND ARE BEING NONDESTRUCTIVELY TESTED. IN THE GROUND-AIR-GROUND FATIGUE AND THE STATIC ULTIMATE TEST THE ROTOR SPECIMENS FAILED. REDESIGN OF THE BLADE IS BEING CONTEMPLATED.	1,300.0	1,270.0	14.6	AUG 82	AUG 82

MANUFACTURING METHODS AND TECHNOLOGY PROGRAM
S U M M A R Y P R O J E C T S T A T U S R E P O R T
2ND SEMIANNUAL SUBMISSION CY 80 RCS DRCMT-301

PROJ NO.	TITLE + STATUS	AUTHO-RIZED ($000)	CONTRACT VALUES ($000)	EXPENDED LABOR AND MATERIAL ($000)	ORIGINAL PROJECTED COMPLETE DATE	PRESENT PROJECTED COMPLETE DATE
1 81 7339	FILAMENT WOUND COMPOSITE FLEXBEAM TAIL ROTOR FUNDS ARE IN THE PROCESS OF BEING FORWARDED TO AVRADCOM PROCUREMENT.	780.0				
1 80 7340	COMPOSITE MAIN ROTOR BLADE FATIGUE TESTS WERE RESUMED WITH A CORRECTED TEST PROCEDURE AND LOWER FREQUENCY WITH SUCCESSFUL RESULTS. FLIGHT TESTS REVEALED PROBLEM AREA IN THE BLADE DESIGN. HUGHES, WITH THEIR FUNDING, IS IN THE PROCESS OF CHANGING THE DESIGN.	2,095.5	2,062.5	30.0	NOV 80	NOV 81
1 81 7340	COMPOSITE MAIN ROTOR BLADE FUNDS ARE IN THE PROCESS OF BEING FORWARDED TO AVRADCOM PROCUREMENT.	250.0				
1 80 7341	STRUCTURAL COMPOSITES FABRICATION GUIDE PHASE II BRIEFING WAS HELD 9 OCT 1980. TEAM MEMBERS PRESENT PROGRESS ON THEIR CHAPTERS. FORMAT REVISIONS TO BE INCORPORATED IN THE THIRD EDITION PUBLICATION HAVE BEEN FINALIZED. WORK CONTINUED ON GATHERING TECHNOLOGY AND COST DATA.	50.0	50.0		DEC 80	JAN 82
1 81 7341	STRUCTURAL COMPOSITES FABRICATION GUIDE FUNDS ARE IN THE PROCESS OF BEING FORWARDED TO THE AIR FORCE (WPAFB).	73.0				
1 80 7342	PULTRUSION OF HONEYCOMB SANDWICH PANELS A REPLY TO THE SOW WAS RECEIVED FROM THE CONTRACTOR. THE PROPOSAL PRICE IS HIGHER THAN ANTICIPATED. FIELD PRICING SUPPORT IS BEING SOLICITED BEFORE ANY ADDITIONAL ACTION IS TAKEN ON THE PROPOSAL.	85.0	73.0	7.5	SEP 82	SEP 82
1 81 7342	PULTRUSION OF HONEYCOMB SANDWICH STRUCTURES FUNDS IN THE AMOUNT OF $180K ARE IN THE PROCESS OF BEING TRANSFERRED TO AMMRC.	200.0				
1 81 7345	IN PROCESS CONTROL OF RESIN MATRIX CURE FUNDS ARE BEING HELD AT AVRADCOM FOR REPROGRAMMING.	265.0				
1 81 7351	COMPOSITE SHAFTING FOR TURBINE ENGINES FUNDS IN THE AMOUNT OF $272K ARE IN THE PROCESS OF BEING FORWARDED TO ATL, FT. EUSTICE, VA.	300.0				
1 81 7354	INTEGRALLY STIFFENED HELICOPTER TRANSMISSION CASE FUNDS ARE BEING HELD AT AVRADCOM FOR REPROGRAMMING.	650.0				
1 80 7370	RING WRAP COMPOSITES WORK TO PREAPARE A CONTRACT WAS INITIATED.	70.0				

MANUFACTURING METHODS AND TECHNOLOGY PROGRAM
S U M M A R Y P R O J E C T S T A T U S R E P O R T
2ND SEMIANNUAL SUBMISSION CY 80 RCS DRCMT-301

PROJ NO.	TITLE + STATUS	AUTHO-RIZED ($000)	CONTRACT VALUES ($000)	EXPENDED LABOR AND MATERIAL ($000)	ORIGINAL PROJECTED COMPLETE DATE	PRESENT PROJECTED COMPLETE DATE
1 79 7371	INTEGRATED BLADE INSPECTION SYSTEM (IBIS) WORK IS CONTINUING ON THE VIM OF IBIS. PART SELECTION FOR DEMONSTRATION OF THE VIM. SOFTWARE PREPARATION. ESTABLISHMENT + VERFICATION TESTING ARE UNDERWAY. WORK IS PROGRESSING ON SCHEDULE.	212.5	212.5		MAR 82	NOV 81
1 80 7371	INTEGRATED BLADE INSPECTION SYSTEM (IBIS) SEE PROJECT NO 1 81 7371 FOR STATUS.	100.0	100.0			SEP 84
1 81 7371	INTEGRATED BLADE INSPECTION SYSTEM (IBIS) THE CONTRACT WAS AWARDED AND THE WORK BEGAN IN NOVEMBER 1980. THIS INITIAL WORK CONSISTS OF THE DESIGN. SOFTWARE DEVELOPMENT. ESTABLISHMENT OF PROCESSES FOR THE INFRARED THERMOGRAPHY AND X-RAY TOMOGRAPHY. THE WORK IS PROGRESSING ON SCHEDULE.	357.0	325.0	32.0		SEP 84
1 81 7376	AUTO INSPECT AND PRECISION GRINDING OF SB GEARS FUNDS IN THE AMOUNT OF $200,000 BEING FORWARDED TO PROPULSION LAB.	215.0				
1 80 7382	LOW COST COMPOSITE MAIN ROTOR BLADE FOR THE UH-60A A DRAFT CONTRACTURAL STATEMENT OF WORK HAS BEEN PREPARED AND IS CURRENTLY BEING REVIEWED.	100.0		2.0	JUN 82	JUN 82
1 80 7391	BEARING DIAGNOSTIC AND RECLAMATION TECHNIQUES THE BEARING INVENTORY HAS BEEN REVIEWED AND INSPECTED. CURRENT AND PROPOSED APPROACHES TO BEARING REFURBISHMENT HAVE BEEN ANALYZED. AND BEARING INSPECTION PROCEDURES HAVE BEEN REVIEWED.	100.0	100.0		MAR 81	MAR 81
1 80 7412	INFRARED DETECTOR FOR LASER WARNING RECEIVER THIS PROJECT WAS JUST FUNDED. NO STATUS REPORT IS REQUIRED.	100.0				

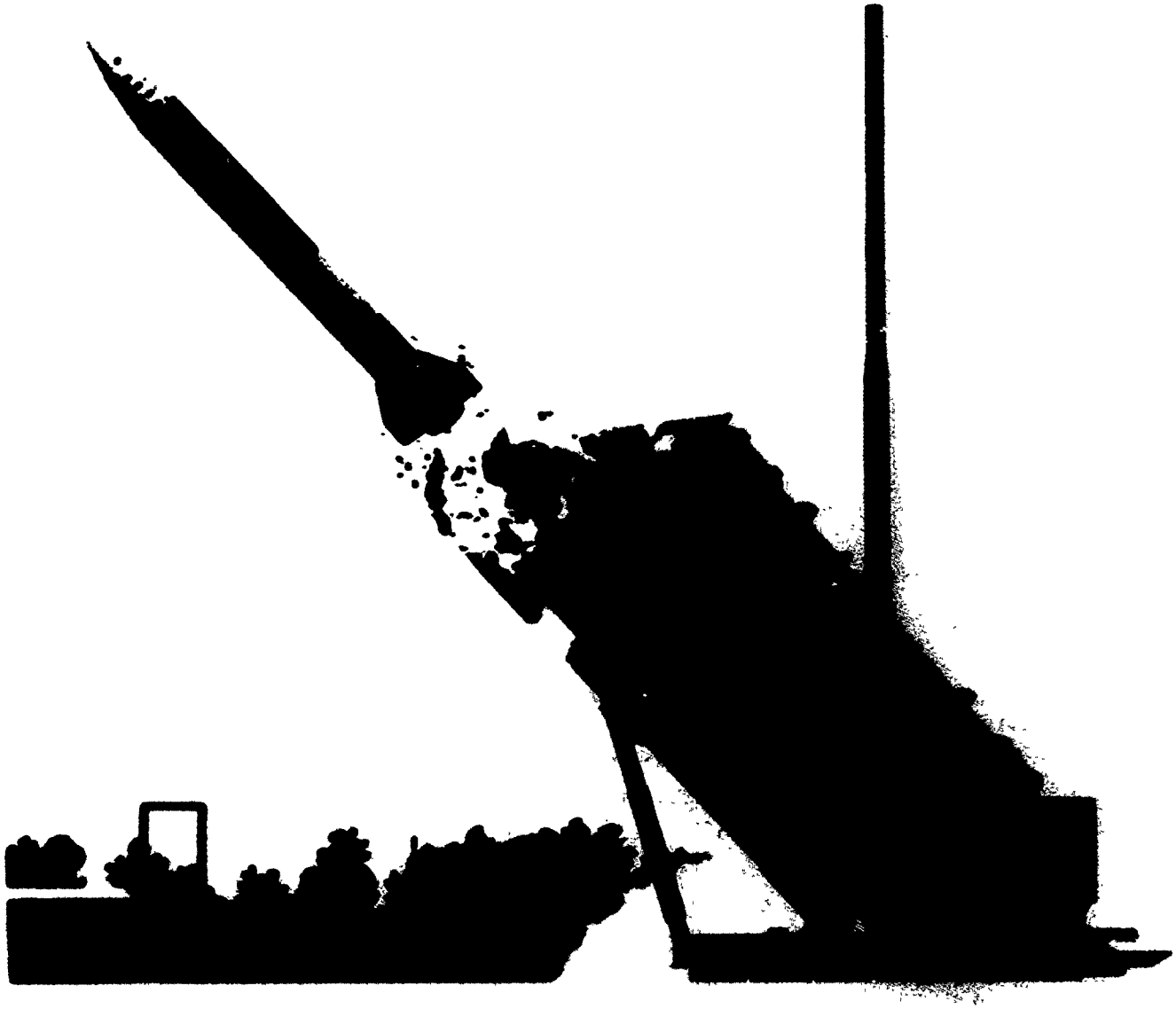

MISSILE COMMAND

(MICOM)

PRECEDING PAGE BLANK-NOT FILMED

MISSILE COMMAND

CURRENT FUNDING STATUS, 2ND CY80

FISCAL YEAR	NO. OF PROJECTS	AUTHORIZED FUNDS ($)	CONTRACT FUNDING ALLOCATED ($)	CONTRACT FUNDING EXPENDED ($)		INHOUSE FUNDING REMAINING ($)	INHOUSE FUNDING EXPENDED ($)	
76	1	572,500	433,500	422,200	(97%)	139,000	139,000	(100%)
77	0	0	0	0	(0%)	0	0	(0%)
77	2	440,000	383,000	302,400	(78%)	57,000	31,400	(55%)
78	12	3,645,400	2,149,100	2,032,100	(94%)	1,496,300	1,059,300	(70%)
79	19	7,436,300	5,598,600	4,640,400	(82%)	1,837,700	1,235,900	(67%)
80	23	7,833,400	3,399,200	1,176,600	(34%)	4,434,200	307,900	(6%)
81	5	1,753,000	0	0	(0%)	1,753,000	5,000	(0%)
82	0	0	0	0	(0%)	0	0	(0%)
TOTAL	62	21,660,600	11,963,400	8,577,700	(71%)	9,717,200	2,778,400	(28%)

AUTHORIZED FUNDING CONTRACT ALLOCATED 55% INHOUSE REMAINING 44%

MANUFACTURING METHODS AND TECHNOLOGY PROGRAM
S U M M A R Y P R O J E C T S T A T U S R E P O R T
2ND SEMIANNUAL SUBMISSION CY 80 RCS DRCMT-301

PROJ NO.	TITLE + STATUS	AUTHO-RIZED ($000)	CONTRACT VALUES ($000)	EXPENDED LABOR AND MATERIAL ($000)	ORIGINAL PROJECTED COMPLETE DATE	PRESENT PROJECTED COMPLETE DATE
R 80 1016	IMPROVED MFG. PROCESSES FOR DRY TUNED ACCELEROMETERS (CAM) ***** DELINQUENT STATUS REPORT *****	228.0	228.0		MAR 81	MAR 81
R 80 1021	COMPUTERIZED PROD PROCESS PLAN F/MACHINED CYLINDRICAL PARTS A PLAN FOR THE ENTIRE PROJECT WAS DEVELOPED. IMPLEMENTATION PLANS WERE DEVELOPED. DESIGN OF THE INTERACTIVE GRAPHICS MODULE WAS LARGELY COMPLETED. SEVERAL EXTENSIONS TO THE COMPUTER PROCESS PLANNING LANGUAGE WERE IDENTIFIED (SEE PROJECT 3 81 1021).	240.0	189.8	25.0	OCT 82	JUN 81
3 81 1021	CPPP MACHINED CYLINDRICAL PARTS (CAM) (SEE PROJECT R 80 1021). PROGRAMMED, AND TESTED. ADMINISTRATIVE CAPABILITIES WERE ADDED TO THE SOFTWARE THAT BUILDS AND USES THE DATA BASE FILES. THE READABILITY OF DATA BASE DOCUMENTATION WAS IMPROVED	234.0			JUL 82	JUL 82
R 80 1023	DIGITAL FAULT ISOLATION F/HYBRID MICROELECTRONIC MODULES CONTRACT NOT YET AWARDED. GOAL IS TO ADAPT THE PROBING TECHNIQUE AND EQUIPMENT FROM PROJECT R 79 3242 TO THE SPECIALIZED CIRCUITRY AND PROBING REQUIREMENTS OF HYBRID MODULES. AUTOMATED PROBE TRACE METHOD WILL ISOLATE FAULTS TO THE CHIP LEVEL.	300.0		3.0	OCT 81	DEC 82
R 80 1024	MMT RADIO FREQUENCY STRIPLINE HYBRID COMPONENTS CONTRACT NOT YET AWARDED. PROJECT WILL ADAPT SEMIADDITIVE PRINTED CIRCUIT BOARD PROCESS TO STRIPLINE AND MICROSTRIP HYBRID DEVICES. RF PLASMA ETCHING, SOLDERING, EUTECTIC BONDING, ULTRASONIC WELDING, & THERMAL COMPRESSION BONDING WILL BE OPTIMIZED.	745.0		42.4	AUG 82	DEC 82
R 80 1026	LOW COST MANUF TECH F/THE HIGH PROD OF MISSILE VANES THE MAJOR OBJECTIVES OF THIS EFFORT ARE TO AUTOMATICALLY CUT, ASSEMBLE AND TRANSPORT MATERIALS TO FABRICATION WORK STATIONS. THE PLAN TO ACCOMPLISH THIS TASK HAS BEEN APPROVED. WORK HAS BEGUN ON TOOL FABRICATION, REFINEMENT (SEE PROJECT 3 81 1026).	305.0	269.4		JUN 81	AUG 81
3 81 1026	PRODUCTION OF LOW COST MISSILE VANES (SEE PROJECT R 80 1026) OF CONTRD. VANE DESIGN AND EVALUATION OF CO-CURING TECHNIQUES.	360.0			AUG 81	AUG 81
R 79 1041	LSI FABRICATION METHODOLOGY IMPROVEMENT HARRIS, RCA + MARTIN STUDIED TEPOLOGY AND PROCESS MODIFICATIONS, PRODUCIBILITY + YIELD IMPROVEMENTS, TEST METHODS + DOCUMENTATION. ARE LOOKING AT SENSITIVITY CHANGE WITH LAYOUT AND PROCESS CHANGE. SHOOTING FOR 7-15% YIELD. EXCELLENT CONTRACTOR KPT.	1,000.0	992.8	3.0	SEP 80	AUG 81
R 80 1071	HYBRID INTEGRATED CAD AND MANUFACTURING (HICADAM) ***** DELINQUENT STATUS REPORT *****	100.0		3.7	SEP 81	SEP 81

MANUFACTURING METHODS AND TECHNOLOGY PROGRAM
S U M M A R Y P R O J E C T S T A T U S R E P O R T
2ND SEMIANNUAL SUBMISSION CY 80 RCS DRCMT-301

PROJ NO.	TITLE + STATUS	AUTHO-RIZED ($000)	CONTRACT VALUES ($000)	EXPENDED LABOR AND MATERIAL ($000)	ORIGINAL PROJECTED COMPLETE DATE	PRESENT PROJECTED COMPLET. DATE
R 80 1075	ELECTRONICS COMPUTER AIDED MANUFACTURING (ECAM) PID PROPOSALS WERE EVALUATED. A PRIME CONTRACTOR WILL FORM A COALITION WITH SEVERAL KNOWLEDGABLE FIRMS AND ESTABLISH CURRENT MODEL AND ARCHITECTURE FOR CAD/CAM IN SEVEN ELECTRONIC TECHNOLOGIES. WILL IDENTIFY VOIDS. THIS IS A TRI-SERVICE EFFORT.	200.0		10.0	SEP 81	DEC 81
3 78 3115	ENGINEERING FOR METROLOGY AND CALIBRATION ***** DELINQUENT STATUS REPORT *****	661.0	234.0	370.0	SEP 79	JUN 81
3 79 3115	ENGINEERING FOR METROLOGY AND CALIBRATION ***** DELINQUENT STATUS REPORT *****	693.0	347.0	212.0	SEP 80	JUN 81
3 80 3115	ENGINEERING FOR METROLOGY AND CALIBRATION ***** DELINQUENT STATUS REPORT *****	747.0	420.0	112.0	DEC 81	
R 79 3116	ROSETTE AIR DEFENSE SEEKER OPTICS AND DETECTORS GENERAL DYNAMICS PRODUCTION ENGINEERED A NICKEL PLATED ALNICO MIRROR, SAPPHIRE CORRECTOR LENS, IR FILTER, PREAMPLIFIER, PM TITANIUM HOUSING, PLASTIC OPTICAL BAFFLE, AND MOTOR ASSEMBLY. GD IS CUTTING COST W/O SACRIFICING QUALITY. TEST JIGS ALSO BUILT.	675.0	639.6	35.0	SEP 79	DEC 81
R 78 3121	APPLICATION AND NDT OF LINE PIPE FOR MOTOR COMPONENTS EIGHT 5/8 INCH DIAMETER BY 1/8 INCH WALL THICKNESS 1035 ELECTRIC RESISTANCE WELD PIPE REQUIRED FOR PHASE 9 COMPONENT FABRICATION HAS BEEN RECEIVED. THE COMPONENTS HAVE BEEN FABRICATED AND DELIVERED FOR TESTING.	300.0	239.3	60.7	SEP 79	JUN 81
R 78 3133	LITHIUM FERRITE PHASE SHIFTER FOR PHASED ARRAY RADAR RAYTHEON USED CARBIDE MANDRELS AND OUTER BAGS TO FORM GREEN TOROID RODS. WORKED WITH FURNACE LOADING IN 11 FIRINGS & RAISED YIELD FROM 7 TO 40%. MORE MANUFACTURING CONTROL IS NEEDED FOR MORE REPRODUCIBLE RESULTS. MATCHING LI-FE TO CARNETT IS HARD.	325.0	195.5	80.0	SEP 79	JUN 81
R 80 3139	PROD METHODS F/MILLIMETER SEEK F/TERMINAL HOMING APPLICATION SPERRY WROTE A COMPUTER MATH MODEL TO EVALUATE ANTENNA COMPONENT MATERIALS AND SENSITIVITY TO RADOME. ALSO DETERMINED MORE EFFICIENT PACKAGING SPECS FOR MAJOR COMPONENTS WERE SENT TO RF PART VENDORS. WILL NOW WORK ON ASSEMBLY METHODS. IS R+D-ISH.	393.4	393.3		MAY 82	SEP 81
3 81 3139	MILLIMETER SEEKERS FOR TERMINAL HOMING (TH) WILL BE A FOLLOW-ON CONTRACT TO ABOVE. THE FIRM WILL DEVELOP INCOMING PARTS INSPECTION, ANTENNA ASSEMBLY, IN-PROCESS TEST, AND ACCEPTANCE TESTING METHODS. WILL REDUCE NUMBER OF PARTS, DEVELOP ASSEMBLY FIXTURING, AND TEST PROCEDURES.	375.0		5.0	SEP 82	SEP 82

MANUFACTURING METHODS AND TECHNOLOGY PROGRAM
S U M M A R Y P R O J E C T S T A T U S R E P O R T
2ND SEMIANNUAL SUBMISSION CY 80 RCS DRCMT-301

PROJ NO.	TITLE + STATUS	AUTHO-RIZED ($000)	CONTRACT VALUES ($000)	EXPENDED LABOR AND MATERIAL ($000)	ORIGINAL PROJECTED COMPLETE DATE	PRESENT PROJECTED COMPLETE DATE
R 80 3142	PRODUCTION METHODS F/LOW COST PAPER MOTOR COMPONENTS FULL SCALE MOTOR CONCEPT DEMONSTRATION BEGUN. REPRODUCIBILITY DEMO WITH PRODUCTION CONTRACTOR ALSO STARTED. PROGRAM IS ON SCHEDULE.	200.0	179.8	15.0	JUN 82	MAR 82
R 79 3146	HIGH DENSITY MULTILAYER THICK FILM HYBRID MICRO CIRCUITS MICROELECTRONICS CORP EVALUATED DIELECTRIC MATERIAL, SCREEN MESH SIZE, GOLD FIRING TEMPERATURE & PRINTED LINE CONDUCTIBITY. IS FOR HIGH DENSITY MULTILAYER HYBRID CIRCUITS WITH 3 MIL LINES & SPACES. 3 MIL LINES RUN 2.5 MILS TO ALLOW FOR BLEED OUT.	350.0	240.0	41.2	JUN 80	JUL 81
R 78 3147	ADDITIVE PROCESSES FOR FABRICATION OF PRINT CIRCUIT BOARDS HUGHES IS USING AN AUTOMATED ELECTROLESS COPPER PLATING PROCESS TO CHEMICALLY DEPOSIT COPPER CONDUCTOR PATTERNS ON PCBS. GOAL IS TO ACHIEVE PATTERNS WITH CIRCUIT BONDS EQUIVALENT TO THOSE PRODUCED BY HIGH TEMP, HIGH PRESSURE LAMINATIONS.	250.0	170.1	79.9	JUN 78	OCT 81
R 79 3160	CLEANLINESS + PROCESS CRITERIA FOR CIRCUIT BOARDS MARTIN IN OPTION 1 IS WORKING TO IDENTIFY, QUANTIFY, AND REMOVE CONTAMINANTS REMAINING ON PCBS AFTER NORMAL CLEANING. LIQUID PHASE CHROMATOGRAPH WAS USED TO READ CONTAMINANTS IN RINSE WATER. GOAL IS TO MONITOR PROCESS STEPS & SET CLEANLINESS LEVELS.	279.4	244.6	18.0	MAR 80	OCT 81
R 78 3165	PRODN PROCESS + TECHNIQUES FOR SEALING HYBRID MIC-CIR PACK ***** DELINQUENT STATUS REPORT *****	220.0	211.0	9.0	NOV 79	MAR 81
R 77 3169	AUTO OPTICAL INSPECTION OF PC BOARDS AND COMPONENTS(CAM) ***** DELINQUENT STATUS REPORT *****	275.0	268.6	6.4	SEP 78	JUN 81
R 80 3169	OPTICAL INSP OF PRINTED CIRCUIT BOARDS ***** DELINQUENT STATUS REPORT *****	90.0	90.0		SEP 80	JUN 81
R 77 3183	IMPROVED PROCESSES FOR INERTIAL GRADE Q-FLEX ACCELEROMETER ***** DELINQUENT STATUS REPORT *****	165.0	114.4	25.0	DEC 78	JUN 81
R 78 3183	IMPROVED PROCESSES FOR INERTIAL GRADE Q-FLEX ACCELEROMETER ***** DELINQUENT STATUS REPORT *****	180.0	115.6	10.0	JUL 80	JUN 81
R 78 3188	INFRARED IMAGING SEEKERS FOR THERMAL HOMING MISSILES ***** DELINQUENT STATUS REPORT *****	500.0	449.9	25.0	MAR 79	JUN 81
R 79 3204	INTERNAL SHEAR FORMING OF MISSILE STRUCTURES ALL WORK IS COMPLETE EXCEPT THE PRODUCTION OF THREE DELIVERABLE PARTS, DELIVERY OF SAMPLES, ECONOMIC ANALYSIS AND FINAL TECHNICAL REPORT.	273.9	273.9		SEP 80	MAR 81

MANUFACTURING METHODS AND TECHNOLOGY PROGRAM
S U M M A R Y P R O J E C T S T A T U S R E P O R T
2ND SEMIANNUAL SUBMISSION CY 80 RCS DRCMT-301

PROJ NO.	TITLE + STATUS	AUTHO-RIZED ($000)	CONTRACT VALUES ($000)	EXPENDED LABOR AND MATERIAL ($000)	ORIGINAL PROJECTED COMPLETE DATE	PRESENT PROJECTED COMPLETE DATE
R 79 3217	AUTOMATED PRODUCTION METHODS FOR TRAVELING WAVE TUBES LITTON SPENT ALL ITS CONTRACT FUNDS PRIOR TO COMPLETION OF THE PILOT RUN. PATRIOT PM WILL PAY FOR 10 TUBES TO BE DELIVERED TO RAYTHEON FOR QUALIFICATION TEST. A PRODUCTION CONTRACT IS EXPECTED FROM RAYTHEON IN EARLY 1981 FOR TUBES FOR PATRIOT.	685.0	620.0	65.0	JUL 80	JUN 81
R 80 3217	AUTOMATED PRODUCTION METHODS FOR TRAVELING WAVE TUBES ***** DELINQUENT STATUS REPORT *****	335.0				
R 78 3218	REDUCE THE FINISHING COST OF FUSED SILICA RADOMES ***** DELINQUENT STATUS REPORT *****	300.0	12.7	281.0	OCT 79	JUN 81
R 79 3219	AUTOMATIC POLYMER ATTACHMENT PRODUCTION METHODS MICROELECTRONICS CORP IS PLANNING A COMBINED POLYMER APPLICATION AND CHIP PICK AND PLACE SYSTEM FOR HYBRIDS. COMPUTER CONTROLLED INSTRUMENTATION WILL BE USED FOR OPTIMUM HANDLING. BUT POLYMER IS APPLIED BY SCREEN PRINTING, NOT BY DISPENSER.	200.0	81.0	70.0	AUG 79	JUL 81
R 80 3219	AUTOMATIC POLYMER ATTACHMENT PRODUCTION METHODS ***** DELINQUENT STATUS REPORT *****	200.0		14.3	JAN 81	JUN 81
3 76 3227	LOW COST PROC METH FOR HAND HYBRID CHIP W/TAPE CAR LEAD FR SEE SUBTASKS BELOW. INDUSTRY DEMONSTRATION SET FOR 26 FEB 81 AT HONEYWELL AEROSPACE, ST PETERSBURG, FL.	572.5	433.5	139.0	NOV 77	FEB 81
3 76 3227 A	HONEYWELL WORK HONEYWELL COMPLETED WORK ON THE BASIC CONTRACT AND THE FINAL REPORT HAS BEEN ACCEPTED.	200.0	149.9	50.1		FEB 81
3 76 3227 B	DETEX SYSTEMS WORK DETEX SYSTEMS WORK WAS COMPLETED DURING AN EARLIER PERIOD. DETEX DEVELOPED UTILIZATION TECHNIQUES.	43.0	32.0	11.0		OCT 79
3 76 3227 C	HONEYWELL MODIFICATION HONEYWELL EARLIER STOPPED WORK ON THIS CONTRACT MODIFICATION BECAUSE RCA STOPPED SUPPLYING WAFERS OF THE TYPE NEEDED.	72.4	54.1	18.3		JUN 80
3 76 3227 D	HONEYWELL OPTION HONEYWELL EARLIER DELIVERED REPORTS SHOWING TAPE CARRIER SPECS, WAFER METALLIZATION PROCESS, TAPE CARRIER PROCESSING, INNER LEAD BOND DEFINITION, OUTER LEAD BOND DEFINITION, DIE TESTING AND REWORK TECHNIQUES.	234.6	175.0	59.6		FEB 81
3 76 3227 E	HONEYWELL OPTION I EXTENSION HONEYWELL DELIVERED 25 OF 150 CIRCUITS TO BE BUILT USING TAPE CARRIER. MAY BE SYNC COUNTERS FOR USE IN B-52 RETROFIT. BTAB APPEARS TO BE UNECONOMICAL FOR LOW VOLUME CIRCUITS BECAUSE OF TAPE PREPARATION COSTS.	22.5	22.5		JAN 81	FEB 81

MANUFACTURING METHODS AND TECHNOLOGY PROGRAM
S U M M A R Y P R O J E C T S T A T U S R E P O R T
2ND SEMIANNUAL SUBMISSION CY 80 RCS DRCMT-301

PROJ NO.	TITLE + STATUS	AUTHO-RIZED ($000)	CONTRACT VALUES ($000)	EXPENDED LABOR AND MATERIAL ($000)	ORIGINAL PROJECTED COMPLETE DATE	PRESENT PROJECTED COMPLETE DATE
R 78 3229	METHODOLOGY FOR PRODUCING LOW COST/ DISPOSABLE MANDRELS WORK ACCOMPLISHED CANNOT BE DETERMINED FROM THE STATUS REPORT THAT WAS SUBMITTED.	273.4	196.4	61.2	SEP 79	DEC 80
R 79 3253	HIGH CURRENT DENSITY CATHODES SPERRY UNIVAC ETCHED HOLES THRU RESIST TO THE SURFACE OF THE SILICON WAFER. HOLES WERE THEN METALLIZED TO FORM EMITTER SPIKES. PLANAR PLASMA ETCHING MAY PERMIT HOLE SPACING TO BE REDUCED FROM 12 TO 4 MICRONS. INCREASING CURRENT DENSITY. IS R&D WORK.	175.0	126.3	48.0	JUN 80	NOV 80
R 80 3254	LOW COST SEMI-FLEXIBLE THIN FILM SEMICONDUCTORS (CAM) PHASE II FOLLOW-ON TO R 78 3254. MICROELECTRONICS CORP IS FABRICATING FUNCTIONAL THIN FILM CIRCUITS USING PILOT LINE FROM PHASE I. NEW MATERIALS. COATINGS. AND HIGH GAIN TRANSISTOR CONFIGURATIONS ARE UNDER TEST & EVALUATION. YIELDS WERE IMPROVED.	375.0	375.0		JUN 81	APR 81
R 80 3263	PRINTED WIRE BOARDS UTILIZING LEADLESS COMPONENTS ***** DELINQUENT STATUS REPORT *****	250.0	127.0	9.5	JAN 81	JUN 81
R 79 3268	AUTOMATIC CONTROL OF PLATING (CAM) CONTROL SOFTWARE IS OPERATIONAL. SOFTWARE HAS FUNCTIONED IN TEST RUNS SIMULATING THE CONTROL OF NINE PLATING TANKS. MODIFICATIONS TO THE AUTOMATIC PLATING LINE ARE APPROXIMATELY 75% COMPLETE AND THE CONTROL EQUIPMENT HAS BEEN POSITIONED.	450.0	209.4	240.5	SEP 80	APR 81
R 79 3280	ENGR ANALYSIS OF MFG PARAMETERS FOR THERMAL BATTERIES ***** DELINQUENT STATUS REPORT *****	145.0			SEP 80	JUN 81
R 79 3287	PRODUCTION METHODS FOR LOW COST STRIP LAMINATE MOTOR CASES FULL SCALE MOTOR CONCEPT DEMO AND REPRODUCIBILITY DEMO CARRIED OUT. PRODUCTION COMPONENTS MADE TO CHAPARRAL DRAWINGS AND DELIVERED. DRAFT FINAL REPORT REVIEWED AND FINAL VERSION IS BEING PUBLISHED.	250.0	196.8	51.2	APR 80	JUN 81
R 80 3294	PRODUCTION PROCESSES FOR ROTARY ROLL FORMING A CONTRACT WAS AWARDED TO BATTELLE COLUMBUS LABORATORIES. MANUFACTURING TECHNIQUES AND PROCEDURES FOR ROLL FORMING NOZZLE CONTOURS IN LINE PIPE WERE ESTABLISHED.	300.0	227.4		DEC 81	JUL 81
3 81 3294	PRODUCTION PROCESS FOR ROTARY ROLL FORMING SECOND YEAR BUY WILL BEGIN IN JULY 1981.	159.0			JUN 82	JUN 82
R 79 3372	MANUFACTURING METHODS FOR MAGNETIC MATERIALS THE ONLY STATUS REPORT WAS THAT A FINAL REPORT IS IN PROGRESS.	410.0	362.0	48.0	OCT 79	SEP 80

MANUFACTURING METHODS AND TECHNOLOGY PROGRAM
S U M M A R Y P R O J E C T S T A T U S R E P O R T
2ND SEMIANNUAL SUBMISSION CY 80 RCS DRCMT-301

PROJ NO.	TITLE + STATUS	AUTHO-RIZED ($000)	CONTRACT VALUES ($000)	EXPENDED LABOR AND MATERIAL ($000)	ORIGINAL PROJECTED COMPLETE DATE	PRESENT PROJECTED COMPLETE DATE
R 78 3376	TESTING ELECTRO-OPTICAL COMPONENTS AND SUBSYSTEMS HARDWARE HAS BEEN ASSEMBLED BREADBOARD FASHION FOR PRELIMINARY CHECKOUT & DEMONSTRATION. REMAINING TASKS CALL FOR PLACING HARDWARE IN ITS FINAL CONFIGURATION & OPERATING IT TO TEST REAL OPTICAL SYSTEMS, WHICH WILL BE APPLIED BY THE GOVERNMENT.	205.0	175.0	30.0	DEC 80	JUN 81
R 80 3376	TESTING OF ELECTRO-OPTICAL COMPONENTS AND SUBSYSTEMS THE HARDWARE NECESSARY FOR GENERATING EXTREMELY HIGH RESOLUTION COMPUTER GENERATED HOLOGRAMS HAS BEEN COMPLETED. THIS DESIGN IS BASED ON THE USE OF A PRECISION CATHODE RAY TUBE AND A PRECISION X-Y STAGE TO WRITE HOLOGRAMS DIRECTLY ONTO FILM.	475.0	475.0		JUN 81	JUN 81
R 79 3381	LOW COST, IMPROVED 2-D HEAT SHIELDS TUBULAR BRAID CANNOT BE USED WITH RMP RESIN. TUBULAR BRAIDS HAVE BEEN MADE FROM E-GLASS YARN FOR A LEACHING EVALUATION. COMMERCIAL SILICA YARN HAS BEEN PURCHASED AND BRAIDED DIRECTLY INTO A TUBULAR BRAID. MODS IN IN-HOUSE BRAIDING EQUIPMENT REQUIRED.	500.0	476.1		MAR 80	JUL 81
R 80 3396	INJECTION MOLDING OF LOW COST-ONE PIECE NOZZLES THE NOZZLE FOR THE MLRS ROCKET WAS SELECTED AS THE DEMONSTRATION COMPONENT. AN INJECTION MOLD DIE IS BEING FABRICATED, AND WILL BE COMPLETED EARLY IN THE NEXT REPORTING PERIOD.	180.0	158.5		JUN 81	JUN 81
R 79 3410	PRODUCTION METHOD FOR HEAT PIPES FOR HYBRID/LSI HUGHES FABRICATED HEAT PIPES FOR HYBRID LSI CIRCUITS. TWO PACKAGE TYPES WERE SELECTED FOR THE PILOT RUN. THERMAL, CHEMICAL & ELECTRICAL COMPATIBILITY TESTS ARE STILL IN PROGRESS. PACKAGE LEAK & FILL PROBLEMS RESULTED IN TWO MONTH SCHEDULE SLIPPAGE.	250.0	206.9	43.1	SEP 79	MAR 81
R 80 3411	MFG OF NON PLANAR PRINTED CIRCUIT BOARDS PROCUREMENT BEING PROCESSED. THE PURPOSE OF THIS PROJECT IS TO PROVIDE THE CAPABILITY TO PRODUCE NON-PLANAR CIRCUIT BOARDS.	770.0			FEB 81	FEB 83
R 80 3435	SIMPLIFICATION OF HIGH-POWER THICK FILM HYBRIDS ***** DELINQUENT STATUS REPORT *****	350.0		5.0	SEP 83	SEP 83
R 80 3436	CERAMIC CIRCUIT BOARDS + LARGE AREA HYBRIDS MA-CONTRACT- MODIFICATIONS HAVE BEEN MADE TO THIS CONTRACT AND A NO COST 60 DAY EXTENSION WAS GRANTED. GD CONTRACT- MODIFICATION TO THE TECHNICAL REQUIREMENTS WAS MADE AND GENERAL DYNAMICS IS IN THE PROCESS OF REBOSTING THE EFFORT.	450.0		38.0		
R 79 3438	DELIDDING, PARALLEL SEAM SEALED HYBRID MICROELECT PACKAGES JOINT WORK WITH NAVY. WESTINGHOUSE ESTABLISHED IMPROVED TECHNIQUES FOR DELIDDING & RESEALING HYBRID PACKAGES. BOTH WELDED PLANAR AND SOLDERED PACKAGES WERE SUCCESSFULLY RESEALED BY WELDING. SP110 SAW MACHINE CUTTER SPINDLE BEARING REPLACED.	200.0	84.2	104.9	OCT 79	JUL 81

MANUFACTURING METHODS AND TECHNOLOGY PROGRAM
S U M M A R Y P R O J E C T S T A T U S R E P O R T
2ND SEMIANNUAL SUBMISSION CY 80 RCS DRCMT-301

PROJ NO.	TITLE + STATUS	AUTHO-RIZED ($000)	CONTRACT VALUES ($000)	EXPENDED LABOR AND MATERIAL ($000)	ORIGINAL PROJECTED COMPLETE DATE	PRESENT PROJECTED COMPLETE DATE
R 79 3441	APPLICATION OF HIGH ENERGY LASER MANUFACTURING PROCESSES ALL WORK HAS BEEN ACCOMPLISHED. FINAL REPORT IS IN PUBLICATION.	400.0	200.0	200.0	SEP 79	APR 81
R 79 3444	FULLY ADDITIVE MANUFACTURING FOR PRINTED WIRING BOARDS ***** DELINQUENT STATUS REPORT *****	200.0	120.0	26.0	SEP 79	JUN 81
R 80 3444	FULLY ADDITIVE MANUFACTURING FOR PRINTED WIRING BOARDS ***** DELINQUENT STATUS REPORT *****	200.0			JUN 80	
R 79 3445	PRECISION MACHINING OF OPTICAL COMPONENT THE INTERIM REPORT FOR THE BASIC EFFORT WAS SUBMITTED IN SEPT 1980. THREE OF THE FIVE TASK UNDER OPTION 1 ARE UNDER WAY INCLUDING- 1. CREW TRAINING-THE ENGINEERS AND TECHNICIANS WHO WILL USE THE EQUIPMENT HAVE MADE TRIAL (SEE PROJECT R 80 3445).	300.0	176.0	30.0	OCT 81	OCT 81
R 80 3445	PRECISION MACHINING OF OPTICAL COMPONENTS (SEE PROJECT R 79 3445) SPHERICAL SURFACES ON BLOCKS OF ALUMINUM. 2. GFE FLYCUTTER CHECKOUT-ALL THE SLIDES AND SPINDLES HAVE BEEN OPERATED AND CHECKED TO DETECT AND CORRECT ERRORS IN THE CONTROL FEEDBACK SYSTEMS (SEE PROJECT 3 81 3445).	400.0	246.0	30.0	JUN 81	JUN 81
3 81 3445	PRECISION MACHINING OF OPTICAL COMPONENTS (SEE PROJECT R 80 3445) 3. FACILITY CHECK OUT-THE FACILITY TO HOUSE THE EQUIPMENT HAS BEEN DESIGNED TO PROVIDE CLEAN AIR, STABILIZED TEMPERATURE, SEISMIC AND ACOUSTIC ISOLATION PLUS NECESSARY UTILITIES.	625.0			JUN 82	JUN 82
R 78 3453	GROUND LASER LOCATOR DESIGNATOR PRODUCTION IMPROVEMENTS ***** DELINQUENT STATUS REPORT *****	211.0			DEC 80	MAR 81
R 78 3454	LO COST - HI VOLUME RADIOGRAPHIC INSPECTION THE TECHNICAL EFFORT HAS BEEN COMPLETED. THE END OF CONTRACT DEMONSTRATION WAS CONDUCTED IN SEPT 1980. THE FORMAL FINAL REPORT WILL BE COMPLETED BY JUNE 1981.	200.0	147.6	52.4	FEB 80	JUN 81

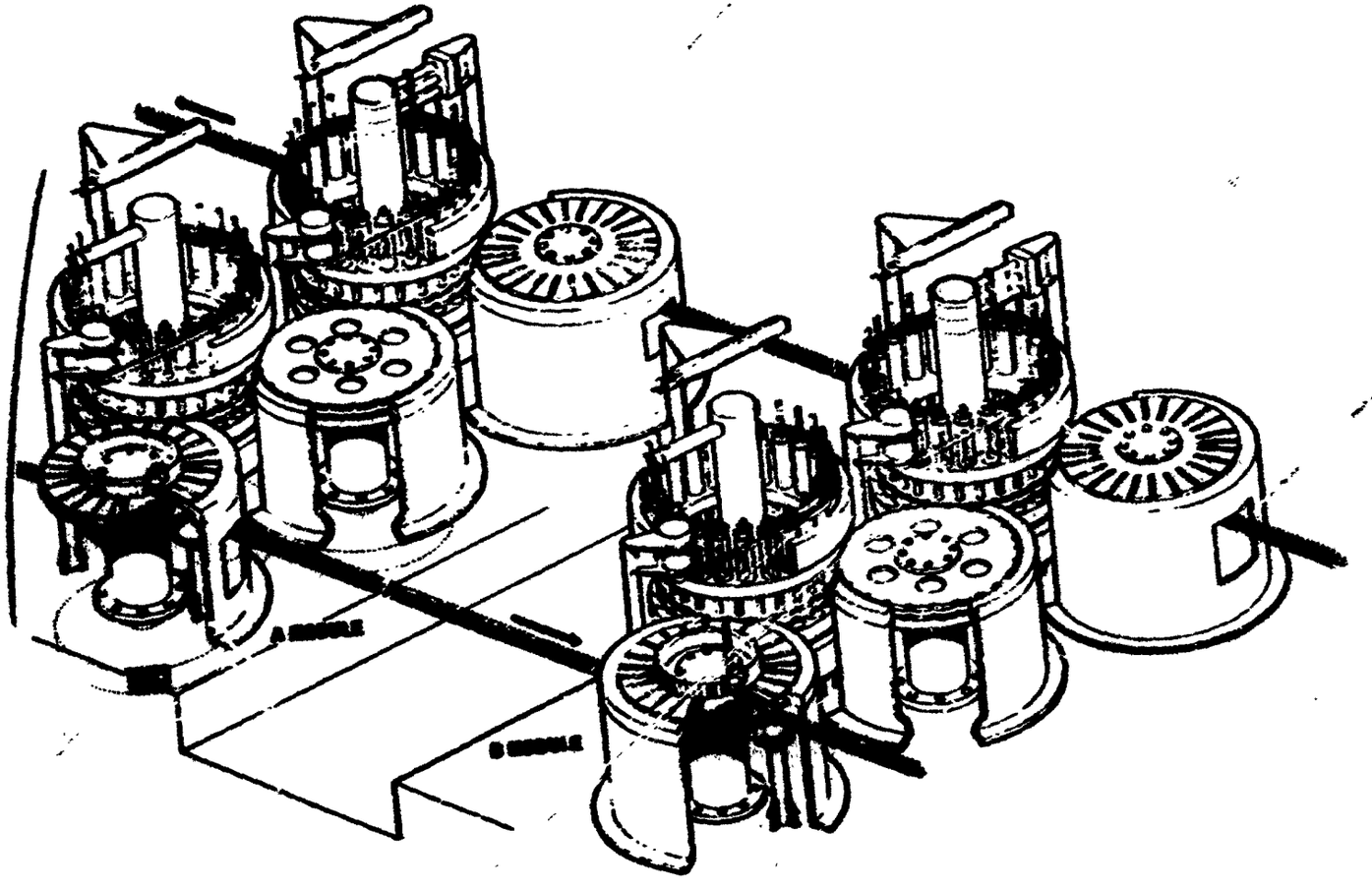

ARMAMENT R&D COMMAND
ARMAMENT MATERIEL READINESS COMMAND
(ARRADCOM, ARRCOM)
(AMMUNITION)

PRECEDING PAGE BLANK-NOT FILMED

A R R C O M - A R R A D C O M (AMMUNITION)

CURRENT FUNDING STATUS, 2ND CY80

FISCAL YEAR	NO. OF PROJECTS	AUTHORIZED FUNDS ($)	CONTRACT FUNDING ALLOCATED ($)	CONTRACT FUNDING EXPENDED ($)		INHOUSE FUNDING REMAINING ($)	INHOUSE FUNDING EXPENDED ($)	
75	1	3,768,000	2,256,000	2,169,000	(96%)	1,504,000	1,452,000	(96%)
76	8	5,591,000	2,876,100	2,643,700	(91%)	2,714,900	2,636,000	(97%)
77	1	1,079,000	963,000	888,000	(92%)	116,000	86,000	(74%)
77	19	5,726,600	3,695,900	3,276,900	(88%)	2,030,700	1,684,400	(82%)
78	23	13,325,300	8,559,200	6,417,200	(74%)	4,766,100	4,125,200	(86%)
79	51	25,996,200	14,194,900	6,497,700	(45%)	11,801,300	8,532,300	(72%)
80	50	26,200,300	16,299,000	3,100,200	(19%)	9,989,300	3,931,300	(39%)
81	0	5,012,000	0	0	(0%)	5,012,000	0	(0%)
82	0	0	0	0	(0%)	0	0	(0%)
TOTAL	152	86,698,400	48,044,100	25,072,700	(51%)	37,854,300	22,447,200	(59%)

AUTHORIZED FUNDING CONTRACT ALLOCATED 56% INHOUSE REMAINING 43%

MANUFACTURING METHODS AND TECHNOLOGY PROGRAM
S U M M A R Y P R O J E C T S T A T U S R E P O R T
2ND SEMIANNUAL SUBMISSION BY RD RCS DRCMT-301

PROJ NO.	TITLE + STATUS	AUTHO-RIZED ($000)	CONTRACT VALUES ($000)	EXPENDED LABOR AND MATERIAL ($000)	ORIGINAL PROJECTED COMPLETE DATE	PRESENT PROJECTED COMPLETE DATE
5 80 0900	AUTOMATED MULTIPLE FILTER LIFE TESTER THE CONTRACTOR'S PROPOSAL WAS REJECTED. A REVIEW WAS HELD TO DETERMINE ALTERNATIVE TO ACCOMPLISH THE PROJECT OBJECTIVE. IT WAS DETERMINED TO REVISE THE TECHNICAL WORK SCOPE TO REFLECT A TWO PHASE INCREMENTALLY FUNDED CONTRACT.	252.0		34.0	NOV 81	FEB 84
8 80 0915	GROUP TECH REQUIREMENTS DEFINITION ELECTRONICS THE PURPOSE OF THIS PROJECT IS TO PROVIDE A DESCRIPTION OF THE FUNDAMENTAL CHARACTERISTICS OF A CLASSIFICATION AND CODING SYSTEM FOR ELECTRONICS. CONTRACT AWARD IS PLANNED FOR 3RD QTR FY81. THIS IS A TRI SERVICE EFFORT.	45.0			DEC 81	DEC 81
5 80 1001	PILOT LINE FOR FUZE FLUIDIC POWER SUPPLIES A LETTER CONTRACT HAS BEEN AWARDED TO KDI PRECISION PRODUCTS, INC. INITIAL PILOT PRODUCTION LINE LAYOUT HAS BEEN COMPLETED.	253.0	202.0	7.0	OCT 81	OCT 81
5 80 1003	LOW COST MOLDED PACKAGING FOR HYBRID ELECTRONICS SPRINGFIELD LABS WILL ADAPT INJECTION MOLDING, ENCAPSULATION AND SEALING TECHNIQUES USED FOR DUAL-IN-LINE PLASTIC PACKAGES TO LARGER HYBRID CIRCUITS. MATERIALS SURVEY WAS COMPLETED. MOLD DESIGN WORK IS IN PROGRESS. IS FOR 587 AND 734 FUZES.	243.0	179.0	12.0	MAY 81	SEP 81
5 80 1005	CERAMIC-METAL SUBSTRATES FOR HYBRID ELECTRONICS WESTINGHOUSE IS SETTING UP PRODUCTION PROCESS, RATES & EQUIPMENT FOR MAKING THICK FILM HYBRID FUZE CIRCUITS ON PORCELAIN ENAMELED STEEL SUBSTRATES. RESISTOR MATERIAL INVESTIGATION IS UNDERWAY. TEST FIXTURE FOR RESISTOR PRINT & LASER TRIM WAS MADE.	319.0	204.0	24.0	OCT 81	MAR 82
5 77 1295	MODERNIZATION OF CHARCOAL FILTER TEST EQUIPMENT THE ENGINEERING STUDY FOR THE TEST EQUIPMENT AND CONTAINMENT CHAMBER HAS BEEN COMPLETED. THIS INCLUDED TESTING OF KEY TESTER COMPONENTS. ENGR DRAWINGS & DESIGN CONCEPT AND FACILITIES REQUIREMENTS.	240.0	175.0	65.0	AUG 78	MAR 81
5 79 1255	MODERNIZATION OF CHARCOAL FILTER TEST EQUIPMENT THE SCOPE OF WORK FOR THE DETAILED DESIGN OF THE TEST EQUIPMENT HAS BEEN PREPARED. AN ADDITIONAL $960K WILL BE REQ TO COMPLETE THIS PROJECT. THIS COST INCREASE IS PRIMARLY DUE TO THE INFLATION AND DELAYS ENCOUNTERED SINCE 1975.	860.0		20.0	DEC 80	SEP 84
8 78 1296	MT FOR CE FILTERS SP1 EVALUATED CHARCOAL HANDLING EQMT. SP2 DEVELOPED PERFORATED PLATE AND SCREEN DISPERSION MACHINE. INVESTIGATED VIBRATION TO COMPACT CHARCOAL AND PREPARED TECH REPORT. SP3 PREPARED REPORT ON FILTER PULSE TESTING. SP4 REPORT ON DUST LEVEL PREPARED.	654.0	291.0	358.2	MAR 79	DEC 80

MANUFACTURING METHODS AND TECHNOLOGY PROGRAM
S U M M A R Y P R O J E C T S T A T U S R E P O R T
2ND SEMIANNUAL SUBMISSION CY 80 RCS DRCMT-301

PROJ NO.	TITLE + STATUS	AUTHO-RIZED ($000)	CONTRACT VALUES ($000)	EXPENDED LABOR AND MATERIAL ($000)	ORIGINAL PROJECTED COMPLETE DATE	PRESENT PROJECTED COMPLETE DATE
5 79 1296	MT FOR CB FILTERS SP2 SIDE FILLING MACHINE FOR FILLING FILTERS WAS CONSTRUCTED AND MODIFIED TO USE VIBRATION AND COMPRESSION TO AID FILLING. SP3 FILTER PULSE WAS FOUND TO BE NOT A VIABLE PROCESS CONTROL TEST. PREPARATION OF WHETLERITE STUDIED AND REPORT PREPARED.	400.0	75.0	324.3	MAY 80	APR 81
5 80 1296	MANUFACTURING TECHNOLOGY FOR CB FILTERS SP2 CONTINUED STUDY OF SIDE FILLING OF FILTERS INCLUDING INCREMENTAL FILLING. SP3 VELOCITY TRAVERSE AND LASER INDUCED FLUORESCENCE TEST METHODS WERE EVALUATED. EFFECTS OF PACKING DENSITY ON FILTER PERFORMANCE IS BEING STUDIED.	404.0	180.0	172.5	MAR 81	DEC 81
5 76 1311	M229 REFIL KIT COMPONENT-CHEMICAL AGENT ALARM CONTRACT WITH INDUSTRIAL DESIGN LABS FOR FAM AND CAM MACHINES HAS BEEN TERMINATED. NEGOTIATED SETTLEMENT HAS BEEN APPROVED. FINAL REPORT WILL BE WRITTEN IN 3081 TO COMPLETE THE PROJECT.	570.0	128.0	393.0	DEC 77	JUN 81
5 77 1312	PAPER, CHEMICAL AGENT DETECTOR M8 PAPER RUNS TO EVALUATE RETENTION AIDS AND ANALYSIS OF DYE RETENTION IN PAPER HAVE BEEN COMPLETED. AN INCREASE OF 11.5 PERCENT IN INDICATOR DYE RETENTION WAS DEMONSTRATED. A FINAL TECHNICAL REPORT HAS BEEN SUBMITTED FOR REVIEW.	116.0		115.0	MAR 78	MAR 81
5 79 1318	CHEMICAL PRODUCTION FILL, CLOSE AND LAP FOR F IN XM736 PROJ AUTOMATIC EVALUATION OF THE FILL LINE STATIONS WAS COMPLETED. ENCAPSULATION AND UNDERGROUND INJECTION CONSIDERED FOR DISPOSAL OF QL WASTE BUT REJECTED. HAZARDOUS LAND FILL BEING CONSIDERED FOR QL WASTE.	396.0		398.0	MAR 81	MAR 81
5 80 1318	EST CHEMICAL PROD + FILL CLOSE + LAPT TECH F/PROJ E11 VX-2 BENCH SCALE TESTS FOR RECOVERY OF AMMONIA AND ETHANOL FROM AQUEOUS WASTES FOR RECYCLE WAS STUDIED. BOTH CARBON AND RESINS WERE EVALUATED AS ADSORPTION AGENTS. A TOXICITY SURVEY OF PROCESS COMPOUNDS WAS COMPLETED.	484.0		154.0	JUN 81	JUN 81
5 81 1318	EST CHEM PROD + FILL CLOSE + LAP TECH F/XVX2 XM736 THIS PROJECT WAS JUST FUNDED. NO STATUS REPORT IS REQUIRED.	216.0				
5 77 1327	IMPROVEMENT AND MODERNIZATION OF GAS MASK LEAKAGE TESTING CONTRACT DATA REQUIREMENTS HAVE BEEN REVIEWED. DRAWINGS AND RELIABILITY TEST PLAN HAVE BEEN COMPLETED AND ACCEPTED.	305.0	193.0	90.0	MAR 79	NOV 80
8 78 1335	MFG TECH FOR NEW PROTECTIVE MASK SPECIFICATION AND PURCHASE REQUEST FOR A LENS MOLDING AND ASSEMBLY CLEAN ROOM WERE PREPARED. CONTINUED PREPARATION OF GC PLAN. PROCESS ENGINEERING WORK FOR COATING AUTOMATION WAS COMPLETED.	764.0	400.0	290.8	JUN 79	JAN 82

MANUFACTURING METHODS AND TECHNOLOGY PROGRAM
S U M M A R Y P R O J E C T S T A T U S R E P O R T
2ND SEMIANNUAL SUBMISSION CY 80 RCS DRCMT-301

PROJ NO.	TITLE + STATUS	AUTHO-RIZED ($000)	CONTRACT VALUES ($000)	EXPENDED LABOR AND MATERIAL ($000)	ORIGINAL PROJECTED COMPLETE DATE	PRESENT PROJECTED COMPLETE DATE
5 79 1335	MAN TECH FOR NEW PROTECTIVE MASK COMPLETED FRONT VOICEMITTER AND HOUSING TOOLING. REVIEWED AND APPROVED DRAWINGS FOR FACEBLANK, LENS MOLD, AND NOSECUP.	672.0		606.7	OCT 82	JUN 82
5 80 1335	MANUFACTURING TECHNIQUES FOR NEW PROTECTIVE MASK RESTRUCTURED PROGRAM TO CONDUCT IN INDUSTRY. REVIEWED PROPOSAL ON AUTOMATED TEST EQUIPMENT. PREPARED PURCHASE REQUESTS FOR DIE CAST TOOLS FOR EXHALATION VALVE AND SIDE PORT.	1,504.0	976.0	203.8	DEC 82	OCT 82
8 78 1345	BIOLOGICAL WARNING SYSTEM ALL PROJECT TASKS HAVE BEEN SUCCESSFULLY COMPLETED EXCEPT FOR SORI CONTRACT. SORI IS COMPLETING QUALITY CONTROL STUDIES OF TACK AND PEEL STRENGTH OF DETECTOR TAPE.	480.0	233.0	240.0	JAN 80	MAR 81
5 79 1345	BIOLOGICAL WARNING SYSTEM ALL PROJECT TASKS HAVE BEEN COMPLETED EXCEPT THE DOM FOR LUMINOL PURIFICATION AND THE WASH STATION INVESTIGATION. FIVE SAMPLES OF LUMINOL WERE PURIFIED AND BROUGHT UP TO SPECIFICATION. WASH STATINS ARE BEING PROCURED BY CSC TO VERIFY PRODUCIBILITY.	525.0	229.0	294.0	DEC 80	MAR 82
5 80 1345	BIOLOGICAL WARNING SYSTEM PREMIX, REFILL KIT, AND DOM TESTS WERE CONTINUED. LIFTER ARM AND CLIP STUDIES WERE COMPLETED AND RESULTED IN SATISFACTORY OPERATION IN THE INJECTOR PUMPS. MICROPROCESSOR LOGIC STUDIES ARE COMPLETE.	463.0	123.0	97.0	SEP 82	SEP 82
5 80 1348	SUPER TROPICAL BLEACH THREE FEASIBLE PROCESSES IDENTIFIED BY BATTELLE AS CANDIDATES FOR PRODUCTION OF CHLORINATED LIME. A LIQUID-LIQUID DOUBLE SALT PROCESS WAS SELECTED FOR FURTHER STUDY BECAUSE OF DISTINCT ADVANTAGES OVER OTHER PROCESSES.	202.0	174.3	21.8	MAR 81	JAN 82
5 78 1353	SMOKE MIX PROCESS (GLATT) COMPLETED INSTALLATION OF BULK TRANSFER SYSTEM. CONTINUED EVALUATION OF 4 BINDERS ON EACH OF 4 M-16 MIX COLORS. CONTINUED TEST PROGRAM TO CONFIRM FORMULAS AND TO DETERMINE OPERATIONAL PARAMETERS IN THE FULL SCALE GLATT GRANULATOR.	416.6	16.0	341.6	OCT 80	AUG 81
5 79 1354	SLUDGE VOLUME REDUCTION AND DISPOSAL PROCESS STUDY DESIGN DATA FOR PRE-CLARIFICATION/EQUALIZATION COMPLETED. EVAL OF NEW TREATMENT CHEMICALS COMPLETED. PILOT-SCALE SLUDGE DEWATERING 95PCT COMPLETE. RESULTS OF ALL THREE INCORPORATED INTO MCA-83 PROJECT FOR POLLUTION ABATEMENT MODERNIZATION.	122.0		99.4	SEP 80	SEP 81
5 80 1354	SLUDGE VOLUME REDUCTION AND DISPOSAL PROCESS STUDY TESTING OF SLUDGE HANDLING METHODS DURING PILOT RECOVERY AND TRANSFER COMPLETED. PRELIM DESIGN INFO FOR PBA HAZARDOUS LANDFILL DISPOSAL HAS BEEN INCORPORATED INTO AN MCA-83 HAZARDOUS LANDFILL CONSTRUCTION PROJ SUBMISSION. DEWATERED SLUDGE SMPLS PREPD	156.0		87.8	DEC 80	SEP 81

MANUFACTURING METHODS AND TECHNOLOGY PROGRAM
S U M M A R Y P R O J E C T S T A T U S R E P O R T
2ND SEMIANNUAL SUBMISSION CY 80 RCS DRCMT-301

PROJ NO.	TITLE + STATUS	AUTHO-RIZED ($000)	CONTRACT VALUES ($000)	EXPENDED LABOR AND MATERIAL ($000)	ORIGINAL PROJECTED COMPLETE DATE	PRESENT PROJECTED COMPLETE DATE
5 79 1355	MANUFACTURING PLANT TOXIC EFFLUENT/EMISSION PRETREATMENT CONTINUED IDENTIFICATION OF TOXIC SUBSTANCES AT PBA USING BOTH CHEMICAL AND BIOLOGICAL METHODS. COMPLETED BUDGET EST FOR ION EXCHANGE AND CARBON COLUMNS FOR TREATMENT OF INDUSTRIAL EFFLUENTS. REVIEWED DRAFT REPORT BY BATTELLE.	104.0	52.2	51.8	JAN 81	MAR 81
5 80 1355	MANUFACTURING PLANTS TOXIC EFFULUENT/EMISSION PRETREATMENT CONDUCTED BATCH CARBON TREATMENT OF PBA INDUSTRIAL WASTE. ANALYSIS OF PBA INDUSTRIAL WASTE INDICATED PRESENCE OF DYES, HEXACHLOROETHANE, AND SEVERAL HEAVY METALS WHICH ARE TOXIC TO AQUATIC LIFE.	222.0		32.0	DEC 81	DEC 81
5 79 1403	IMPROVED PROC/SUBSTITUTION OF NONTOXIC DYES-MIR SMK GRENADES FINAL SELECTION OF YELLOW AND GREEN SMOKE MIX FORMULATIONS CONTAINING NONTOXIC DYE COMPLETED. PROTOTYPE GRENADES FOR PERFORMANCE AND HAZARDS CLASSIFICATION TESTS. INITIATED STUDIES FOR PREPARATION OF DYE SPECIFICATION.	315.0		168.0	JUN 81	JUN 81
5 79 1903	DIE CAST TAILCONE + DESIGN MACHINE FOR BLU-96/B ***** DELINQUENT STATUS REPORT *****	450.0	426.0	24.0	APR 80	JUN 81
5 80 1903	DIE CAST TAIL CONE + DESIGN MACHINE FOR BLU-96/B ***** DELINQUENT STATUS REPORT *****	1,176.0	1,140.0	10.6	MAR 81	JUN 81
5 79 1905	PBX CONTINUOUS CASTING FOR MUNITIONS LOADING FIXED PRICE CONTRACT FOR TECH SUPPORT AWARDED TO ABL IN SEPT 80. TECH DATA TO DESIGN A CONTINUOUS PBX PILOT PLANT WAS TRANSFERRED TO CONTRACTOR DURING MEETINGS WITH NAVY PERSONNEL. WORK ON CONTRACT TASKS IS IN PROCESS.	250.0	94.5	90.6	DEC 80	JUL 81
5 81 1907	AUTOMATED CAGING FOR MED. CAL. PROJ. BODIES (CAM) THIS PROJECT WAS JUST FUNDED. NO STATUS REPORT IS REQUIRED.	625.0				
5 78 3907	MNOS COUNTER-MEMORY CIRCUIT FOR FUZES NITRON BUILT AND PACKAGED 6265 METAL NITRIDE OXIDE SEMICONDUCTOR (MNOS) TIMER CIRCUITS FOR THE MPPT FUZE. METHODS HANDBOOK AND FINAL REPORT ARE EXPECTED BY MARCH 81. PLASTIC DUAL-IN-LINE PACKAGES WERE USED.	300.0	273.7	25.0	SEP 79	MAR 81
5 79 3960	PROTOTYPE PDA EQUIP FOR PRINTED CIRCUIT BOARDS HDL USED THEIR PROTOTYPE PRODUCING EQUIPMENT TO VERIFY DESIGN PACKAGES FOR SEAGNAT AND JAMMER. FOUND PROBLEMS WHILE BUILDING THE CIRCUIT BOARDS & INFORMED DESIGN GROUP. USED NEW PLOTTER, EXPOSER, DEVELOPER, ETCHER, LAMINATOR, AND COMPONENT INSERTER.	405.0	173.0	94.0	DEC 79	SEP 81

MANUFACTURING METHODS AND TECHNOLOGY PROGRAM
S U M M A R Y P R O J E C T S T A T U S R E P O R T
2ND SEMIANNUAL SUBMISSION CY 80 RCS DRCMT-301

PROJ NO.	TITLE + STATUS	AUTHO-RIZED ($000)	CONTRACT VALUES ($000)	EXPENDED LABOR AND MATERIAL ($000)	ORIGINAL PROJECTED COMPLETE DATE	PRESENT PROJECTED COMPLETE DATE
5 79 3961	IMPROVED 3-D VIBRATION ACCEPTANCE TEST FOR ART FUZES ESSENTIALLY ALL WORK HAS BEEN COMPLETED FOR THE DESIGN OF THE 3D-VTS. PHASE I CONTRACT FUNDS HAVE BEEN EXPENDED. HOWEVER, THE TDP IS NOT IN FINALIZED FORMAT. ADDITIONAL FUNDING IS BEING PROGRAMMED. SEE MT PROJECT 5 80 3961.	262.0	192.0	69.0	SEP 81	JUN 81
5 80 3961	IMPR (3-D) VIB ACCEPT TSTNG F ART FUZES AND S/A MECHANISMS SEE MT PROJECT 5 79 3961. A CONTRACT FOR THE LING B-335 SHAKER SYSTEMS WAS AWARDED. FABRICATION OF THE TWO SHAKERS COMMENCED OCT 80. INTERCONNECT-CABLES AND HOSE LENGTH HAVE BEEN ESTABLISHED AT 42 FEET.	352.0	262.0	4.0	SEP 82	JUN 82
5 79 4000	AUTOMATED M55 DETONATOR PRODUCTION EQUIPMENT CUP INSPECTION MODULE WAS INSTALLED AT LONE STAR AAP. INSPECTION MODULE BEING ASSEMBLED. EQUIP FOR MATERIALS HANDLING WAS RECEIVED AND IN ASSEMBLY PHASE. HAZARDS ANALYSIS CONTRACT FOR PROTOTYPE LINE AT IOWA AAP INITIATED WITH IITRI.	1,600.0	719.2	800.4	MAR 81	JUN 81
5 80 4000	AUTOMATED M55 DETONATOR PRODUCTION EQUIPMENT LIAISON CONTINUED WITH IITRI ON THE SYSTEM HAZARD ANALYSIS AND GOCO PLANTS. SUPPORT WAS FURNISHED FOR FABRICATION OF THE MATERIAL HANDLING SYSTEM.	250.0	20.0	183.7	MAR 81	JUN 81
5 79 4024	DSN DEV BLD PROT COMP AND AUTO ASSY MACH M223 FZ A CONTRACT WAS AWARDED TO INNOVA INC. THE CONCEPT DESIGNS WERE REVIEWED AND DETAILED DESIGNS STARTED. THE SCREW AND WEIGHT ASSEMBLY MACHINE AND THE SLIDE ASSEMBLY MACHINE DESIGNS WERE COMPLETED.	1,132.0	945.1	89.3	SEP 81	FEB 81
5 80 4033	CAUSTIC RECOVERY FROM SODIUM NITRATE SLUDGE LAB STUDIES REVELAED TECHNICAL PROBLEMS IN PROCESSING SODIUM OXIDE. 3 ALTERNATIVE PROCESSES WERE PROPOSED AND AN ECONOMIC ANALYSIS WAS DONE ON EACH. A CONTRACT TO OBTAIN AN INDEPENDENT ANALYSIS OF THE ALTERNATIVES WAS AWARDED TO BATTELLE COLUMBUS.	153.0	10.8	69.0	JAN 81	DEC 81
5 80 4037	PROCESS IMPROVEMENT FOR PLASTIC-BONDED EXPLOSIVES PROCESS SURVEY FOR CYK-4, W-105 PRECOAT, PBX-0280 AND LX-14-0 WAS DONE. IMPROVEMENTS WERE IDENTIFIED. DIRECT COATING FOR PBX-0280 AND LX-14-0 IS BEING EVALUATED. CALCULATIONS FOR THE EIMCO BELT FILTER FOR USE IN DEWATERING C-4 WERE PERFORMED.	234.6	204.6	30.0	DEC 81	DEC 81
5 78 4041	AUTO EQUIP FOR ASSY OF MORTAR COMPONENTS VENDOR TESTS OF STATIONS AND OVERALL SYSTEM WERE CONDUCTED IN JULY 1980. EQUIPMENT NOT ACCEPTED BY GOVT DUE TO NUMEROUS MACHINE STOPPAGES. FURTHER DEBUG AND TESTING WERE DEFERRED TO MILAN AAP MOD PROJECT 5S92007. MMT PROJECT WILL COMPLETE TECH DATA.	867.0	666.0	193.6	JUL 79	JUN 81

MANUFACTURING METHODS AND TECHNOLOGY PROGRAM
S U M M A R Y P R O J E C T S T A T U S R E P O R T
2ND SEMIANNUAL SUBMISSION CY 80 RCS DRCMT-301

PROJ NO.	TITLE + STATUS	AUTHO-RIZED ($000)	CONTRACT VALUES ($000)	EXPENDED LABOR AND MATERIAL ($000)	ORIGINAL PROJECTED COMPLETE DATE	PRESENT PROJECTED COMPLETE DATE
5 79 4046	QUANTITATIVE ANAL. OF BLENDED EXPLOS. SAMPLES EFFORT CONTINUED TOWARD DEVELOPMENT OF A PROCESS TO ANALYZE PA-100 VIA THE POLAROGRAPH TECHNIQUE. PRESENT THRUST IS A PROCEDURE USING POLAROGRAPH WITH WET CHEMICAL ANALYSIS. FINAL REPRODUCIBILITY TESTING OF THE PROCEDURE IS IN PROCESS.	307.0	70.0	200.1	NOV 80	MAR 81
5 79 4059	OPTIMIZATION - NITROGUANADINE IN M30 PROPELLANT TWO NG PARTICLE SIZE MONITORS, ONE FOR THE CRYSTALLIZER SLURRY AND ONE FOR THE FINAL PRODUCT WERE MODIFIED AND INSTALLED IN THE NSE. PRELIMINARY OPNS AND STANDARDIZATION WERE ACCOMPLISHED. SOME DISCREPANCIES WERE IDENTIFIED AND MUST BE RESOLVED.	250.0	225.0	22.5	MAR 81	JUL 81
5 80 4061	NITROGUANIDINE PROCESS OPTIMIZATION A REVIEW OF THE PROCESS PARAMETERS WAS COMPLETED FOR ALL PARTS OF THE PLANT. MAXIMUM AND MINIMUM OPERATING CONDITIONS WERE DETERMINED. OPERATIONS OF THE NSE DURING PROVE OUT WERE CLOSELY FOLLOWED. AN INTERIM TEST PLAN WAS PREPARED.	254.0	189.0	51.0	MAY 81	AUG 81
5 79 4062	AUTO MFG SYSTEM FOR MORTAR INCREMENT CONTAINERS THREE CONTRACT AWARDS WERE MADE ON 29 SEPTEMBER 1980 TO DESIGN AUTOMATED MANUFACTURING AND ASSEMBLY SYSTEMS FOR MORTAR INCREMENT HALVES.	507.0	12.4	206.7	APR 82	AUG 81
5 80 4062	AUTO MANUFACTURE SYS F/MORTAR INCREMENT CONTAINERS DESIGN EFFORTS ARE UNDERWAY AT FMC CORPORATION, FOR THE ESTABLISHMENT OF SLURRY VACUUM FORMING AND PAPER MOLDING BASED MANUFACTURING SYSTEMS, AND AT INNOVA INC., FOR THE ESTABLISHMENT OF AN AUTOMATED ASSEMBLY SYSTEM.	883.5	635.7		OCT 81	OCT 81
5 79 4064	AUTO LAP OPERATIONS FOR 105MM TANK CARTRIDGES A PRACTICAL PRODUCTION LINE SYSTEM FOR THE LOAD AND ASSEMBLY OF A FAMILY OF 105MM TANK CARTRIDGES HAS BEEN DESIGNED AND IS IN VARIOUS STAGES OF DESIGN EXECUTION AND VERIFICATION.	1,262.0	919.7	183.7	SEP 80	SEP 81
5 79 4084	OPACITY/MASS EMISSION CORRELATION BASED ON CONFIRMATORY TESTS AND DATA ANALYSIS, A CORRELATION BETWEEN MASS EMMISSIONS AND OPACITY WAS ESTABLISHED FOR FLINCHBAUGH.	121.0	92.5	28.5	JUN 81	JUN 81
5 80 4084	OPACITY/MASS EMISSION CORRELATION FIELD TESTING AT SCRANTON AAP WAS COMPLETED.	111.0	15.0	85.0	JUN 81	SEP 81
5 76 4122	PRODUCTION LINE MODERNIZATION FOR CBU WEAPONS ***** DELINQUENT STATUS REPORT *****	721.0	128.0	574.3	MAR 77	JUN 81

MANUFACTURING METHODS AND TECHNOLOGY PROGRAM
S U M M A R Y P R O J E C T S T A T U S R E P O R T
2ND SEMIANNUAL SUBMISSION CY 80 RCS DRCMT-301

PROJ NO.	TITLE + STATUS	AUTHO-RIZED ($000)	CONTRACT VALUES ($000)	EXPENDED LABOR AND MATERIAL ($000)	ORIGINAL PROJECTED COMPLETE DATE	PRESENT PROJECTED COMPLETE DATE
5 79 4124	FABRICATION OF CONTROL ACTUATION SYSTEM HOUSINGS PRELIMINARY TOOL AND FIXTURE SPECIFICATIONS FOR THE 5 AND 8 INCH HOUSINGS HAVE BEEN COMPLETED. THE PROGRAMMING AND PACKAGE DESIGN ASPECTS ARE NEAR COMPLETION WHILE TOOL AND FIXTURE PURCHASES HAVE BEGUN.	930.0	786.2	41.2	JUN 80	DEC 82
5 80 4137	AUTOMATED LOADING OF CENTER CORE IGNITERS FY80 FUNDING CUT FROM 967 TO 67. EFFORT REDUCED TO PREPARATION OF PHASE II SCOPE OF WORK TO DESIGN, FABRICATE, TEST AND INSTALL A PROTOTYPE MODULE. THE SCOPE OF WORK IS UNDER PREPARATION.	67.0		39.4	JUN 81	JUN 81
5 78 4138	APPLICATION OF RADAR TO BALLISTIC ACCEPTANCE TEST OF AMMO THIS PROJECT IS NOW ADDRESSING PHASE II AND IS KNOWN AS THE FY80/81 ENHANCEMENT PROGRAM. THE OBJECTIVE OF THE PROGRAM IS TO IMPROVE THE PERFORMANCE OF ARBAT BY UPGRADING HARDWARE AND SOFTWARE. SEE MMT PROJECT 5 79 4139.	1,565.0	1,293.7	271.3	FEB 79	SEP 81
5 79 4139	APPL OF RADAR TO BALLIST ACC TESTG OF AMMO-ARBAT SEE MMT PROJECT 5 78 4139. THE ORIGINAL CONTRACTOR, ITT GILFILLAN WILL RECEIVE A CONTRACT TO ENHANCE THE ARBAT SYSTEM. ARRADCOM WILL CONTINUE TO MANAGE THE PROGRAM.	763.8	736.6	28.2	SEP 79	SEP 81
5 78 4143	MFG OF CANISTERS AND COMP F/M259 + M264 ROCKETS THE 500 WICKS RECEIVED FROM THE CONTRACTOR WERE LOADED INTO 50 CANISTERS (10 WICKS PER CANISTER). TESTS WERE PERFORMED AT HIGH AND LOW TEMPERATURES TO VERIFY THE ACCEPTABILITY OF THE NEW CONFIGURATION. FINAL REPORT WAS COMPLETED.	160.0	83.4	71.0	MAR 80	OCT 80
5 78 4149	LOADING OF 30MM ADEN/DEFA HEDP AMMUNITION PRIOR WORK SUSPENSION WAS REMOVED. THREE HUNDRED FLUTED LINERS WERE FABRICATED BY HOT FORGE PROCESS WITH CLOSE TOLERANCES. PROJECTILES WERE CHARGED AND SCHEDULED FOR QUALIFICATION TESTS.	500.0	405.7	92.2	MAY 79	FEB 81
5 78 4150	NEW MANUFACTURING PROCESSES FOR SAWS AMMUNITION DURING THIS REPORT PERIOD THIS SERIES OF PROJECTS HAD TO BE REDIRECTED. THE NATO CHOICE OF THE BELGIAN AMMUNITION OVER THE US DESIGNS HAS RESULTED IN DELAYS.	61.4	28.5	26.5	SEP 80	JUN 81
5 79 4150	NEW MANUFACTURING PROCESSES FOR SMALL CALIBER PENETRATORS THIS PROJECT WILL DEVELOP THE REQUIRED BULLET ASSEMBLY MACHINE MODIFICATIONS. THE EFFORT HAD TO BE REDIRECTED TO ACCOMODATE THE NEW CONFIGURATION. DESIGN WORK IS NEARLY COMPLETE AND FABRICATION WAS STARTED.	376.0	220.0	99.8	MAR 81	MAR 81
5 80 4150	NEW MANUFACTURING PROCESSES FOR SAWS AMMUNITION CONTRACTS WERE AWARDED FOR THE SKEWED AXIS ROLL FORMING AND THE COLD HEADING PHASES OF THE PENETRATOR. A BULLET ASSEMBLY CONTRACT WAS AWARDED TO THE GOCO FACILITY. THESE EFFORTS ARE NOW DIRECTED TO THE BELGIAN SS109 CONFIGURATION.	489.0	357.0	102.0	JUN 82	SEP 81

MANUFACTURING METHODS AND TECHNOLOGY PROGRAM
S U M M A R Y P R O J E C T S T A T U S R E P O R T
2ND SEMIANNUAL SUBMISSION CY 80 RCS DRCMT-301

PROJ NO.	TITLE + STATUS	AUTHO-RIZED ($000)	CONTRACT VALUES ($000)	EXPENDED LABOR AND MATERIAL ($000)	ORIGINAL PROJECTED COMPLETE DATE	PRESENT PROJECTED COMPLETE DATE
5 78 4153	INERTIA WELDER FOR THE M509 AND M483 PROJECTILES ALTERNATE BAND SEAT GEOMETRIES AND FLUX/OIL COATINGS HAVE BEEN INVESTIGATED. TOOL BREAKAGE HAS BEEN A PROBLEM.	350.0	225.0	26.2	AUG 80	SEP 81
5 80 4165	HIGH FRAGMENTATION STEEL PRODUCTION PROCESS CONTRACT WITH OPERATING CONTRACTOR AT SAAP CONSUMMATED. FORGING TOOLS IN DESIGN. FUNDING SENT TO AMMRC FOR SPECS ON SHORT ROD FRACTURE TOUGHNESS TESTING EQUIPMENT.	1,046.0	574.0	223.2	JAN 81	DEC 81
5 80 4210	DRY CUTTING OF ENERGETIC MATERIALS WORK ON SAFETY SITE PLAN AND REVIEW INITIATED. HAZARD CLASSIFICATION OF 1.1 ESTABLISHED. APPROX. 300 LBS. OF INERT PROPELLANT SIMULANT PREPARED. CONCEPT DRAWINGS OF MATERIAL HANDLING EQUIPMENT PREPARED. THE JET CUTTER WILL BE MTD VERT OVER CONVEYOR.	450.0	338.0	39.0	MAY 82	JUN 82
5 78 4214	POLLUTION ENGINEERING FOR 1983-85 REQUIREMENTS PROJECT 5XX4214 IS AN ORDERLY TRANSITION OF PROJECT 5XX4114 POLLUTION ABATEMENT METHODS FOR PROPELLANTS AND EXPLOSIVES AND IS DIRECTED TO MEETING FUTURE STANDARDS. REFER TO THE FOUR INDIVIDUAL TASKS FOR ANY CHANGES AND/OR ADDL INFO RE THE PROJECT	1,180.0	516.5	663.5	SEP 79	SEP 81
5 78 4214 P1	TECHNOLOGY REQUIREMENTS ARRADCOM COORDINATING "CHEMICAL ASSESSMENT PROGRAM" AT IOWA AAP WITH FT.DIETRICK LAB. EXPLOSIVE STANDARDS ACQUIRED TO COMPILE LIBRARY OF REFERENCE GAS CHROMATOGRAPH SPECTRA CURVES. THESE WERE ACQUIRED FROM ARRADCOM AND US ARMY TOXIC AND HAZ MTLS AGCY	211.7		203.1	SEP 79	MAR 81
5 78 4214 P2	IN-PLANT REUSE OF POLLUTION ABATED WATERS FINAL REPORT, RECOMMENDATIONS, SCHEMATICS OF PROPOSED REUSE MEASURES PREPARED FOR RAAP AND HSAAP.	377.0	130.3	246.7	JUL 79	MAR 81
5 78 4214 P3	LOW COST SYSTEM TO ABATE NITROECDY POLLUTION TWO ADDITIONAL EXPERIMENTS INVOLVING PINK WASTEWATER AT HIGHER TNT CONCENTRATION WERE MADE AND THE FINAL REPORT WAS COMPLETED BY IOWA AAP. THIS FINAL REPORT WAS RECEIVED AND IS BEING REVIEWED.	355.0	235.9	119.1	JUL 79	MAR 81
5 78 4214 P4	NG-NITRATE ESTER REMOVAL BY ADSORPTION/RECYCLE BENCH-SCALE ADSORPTION TESTS WITH XAD-4 AND XE-348 RESINS WERE INITIATED. AN EA AND NG PURIFICATION DATA BASED UPON THE RESULTS OF THE ABOVE HAVE INDICATED THAT PILOT PLANT TEST OF A 2-BED DOWNFLOW ADSORP/DENITRATION SYSTEM SHOULD USE XE-348 RESIN.	236.0	150.0	86.0	JUL 78	SEP 81
5 79 4214	POLLUTION ENGINEERING FOR 1983-85 REQUIREMENTS PROJECT 5XX4214 IS AN ORDERLY TRANSITION OF PROJECT 5XX4114 POLLUTION ABATEMENT METHODS FOR PROPELLANTS AND EXPLOSIVES AND IS DIRECTED TO MEETING FUTURE STANDARDS. REFER TO THE FOUR INDIVIDUAL TASKS FOR ANY CHANGES AND/OR ADDL INFO RE THE PROJECT.	1,269.0	553.0	632.0	SEP 80	JUN 82

MANUFACTURING METHODS AND TECHNOLOGY PROGRAM
S U M M A R Y P R O J E C T S T A T U S R E P O R T
2ND SEMIANNUAL SUBMISSION CY 80 RCS DRCMT-301

PROJ NO.	TITLE + STATUS	AUTHO-RIZED ($000)	CONTRACT VALUES ($000)	EXPENDED LABOR AND MATERIAL ($000)	ORIGINAL PROJECTED COMPLETE DATE	PRESENT PROJECTED COMPLETE DATE
5 79 4214 P1	TECHNOLOGY REQUIREMENTS ACETONE/ALCOHOL SOLVENT REPLACEMENT STUDY FOR S-B PROPELLANTS IS CONTINUING. BENCH SCALE SCRUBBING WITH H2O2 TO REMOVE NOX FUMES IN THE MANUFACTURE OF HNO3 AT BAAP HIGHLY SUCCESSFUL. 95-98PCT REMOVAL WITH LESS THAN ONE SECOND RETENTION REPORTED.	367.0	142.0	219.7	SEP 79	SEP 81
5 79 4214 P2	IN-PLANT REUSE OF POLLUTION ABATED WATERS BENCH SCALE TESTS COMPLETED. THEY REVEAL THAT A SYSTEM CAN BE DESIGNED TO (1)EFFICIENTLY REMOVE ETHYL ACETATE FROM BALL POWDER BATCH HARDENING EFFLUENT WITH CARBON ADSORPTION AND (2)EFFICIENTLY RECOVER ETHYL ACETATE BY STEAM REGENERATION.	449.0	296.0	153.0	JUL 80	DEC 81
5 79 4214 P3	LOW COST SYSTEM TO ABATE NITROBODY POLLUTION FINAL REPORT ON UV/OZONALYSIS RECEIVED FROM ICWA AAP. PROJ RESULTS COORDINATED WITH USATHAMA. FINAL REPORT ON SURFACTANT TECHNOLOGY IN PREPARATION. CONTRACTOR'S FINAL REPORT ON RDX, UV/OZONANALYSIS IS BEING REVIEWED.	325.0	45.0	200.4	MAR 80	MAR 82
5 79 4214 P4	NG-NITRATE ESTER REMOVAL BY ABSORPTION/RECYCLE BENCH SCALE ADSORPTION TESTS WERE COMPLETED. PRELIMINARY HAZARDS ANALYSIS OF THE NITRATE ESTER REMOVAL SYSTEM WAS COMPLETED. STABILITY TESTS AND DTAS PERFORMED ON NG/DNG LOADED RESINS. 4-IN DIA X 24-IN LONG PILOT PLANT ADSORPTION COLUMNS COMPLETED.	128.0	70.0	58.0	SEP 80	JUN 82
5 80 4225	RED WATER POLLUTION ABATEMENT SYSTEM PURIFICATION TESTS OF CRUDE TNT WERE PERFORMED WITH CONTAMINATED SELLITE. A SCREW CONVEYOR WAS SUCCESSFULLY TESTED AT BONNOT COMPANY FOR EXTRUDING REPULPER MIX AND SLUGS OF DRY ASH.	155.0	71.0	7.0	MAY 81	MAR 82
5 81 4225	RED WATER POLLUTION ABATEMENT SYSTEM THIS PROJECT WAS JUST FUNDED. NO STATUS REPORT IS REQUIRED.	160.0				
5 80 4226	ON-LINE MONITORS FOR WATER POLLUTANTS REVISED SCOPE OF WORK ACCEPTED BY RADFORD. GOCO CONTRACT MOD ISSUED BY ARRCOM 30 SEPT. ASSEMBLY AND CHECK OUT OF THE ELECTROCHEMICAL AND RAMAN ANALYZERS INITIATED AT RADFORD AAP.	100.0	48.2	44.1	NOV 81	DEC 81
5 80 4231	IN-PLANT REUSE OF POLLUTION ABATED WATERS THE 900 (81MM MORTAR LINE), 1000 (105MM LINE) AND 1100 (CBU LINE) AREAS AT KANSAS AAP IDENTIFIED AS PRACTICAL AND ECONOMICAL AREAS FOR RECYCLE/REUSE OF POLLUTION ABATED WATERS. Y-LINE (METAL PARTS LINE) AT LOUISIANA SIMILARLY IDENTIFIED.	250.0	163.4	46.3	JUL 81	JUN 82
5 80 4266	MFG, INSP AND TEST EQUIPMENT FOR MAGNETIC POWER SUPPLY THE CONTRACT WAS AWARDED TO THE CONTRACTOR 24 JULY 1980. THE DETAIL DESIGN OF THE ASSEMBLY STATION WAS COMPLETED AND A FUNCTIONAL LAYOUT OF THE LINE ESTABLISHED. FAB & PROCUREMENT OF THE ASSEMBLY STA. CRITICAL HARDWARE HAS BEEN INITIATED.	345.0	270.0	35.0	JUL 82	JUN 82

MANUFACTURING METHODS AND TECHNOLOGY PROGRAM
S U M M A R Y P R O J E C T S T A T U S R E P O R T
2ND SEMIANNUAL SUBMISSION CY 80 RCS DRCMT-301

PROJ NO.	TITLE + STATUS	AUTHO-RIZED ($000)	CONTRACT VALUES ($000)	EXPENDED LABOR AND MATERIAL ($000)	ORIGINAL PROJECTED COMPLETE DATE	PRESENT PROJECTED COMPLETE DATE
5 77 4267	CONTINUOUS PROCESS FOR GRANULAR COMPOSITION B NIRO ATOMIZER TERMINATED CONTRACT TO DESIGN PRILLING TOWER. INERT TEST OF TWO FLUID NOZZLE PERFORMED BY TAILOR CO. TWO COMPANIES BEING CONSIDERED FOR TECHNICAL CAPABILITY AND LIVE TESTS FOR PRILLING COMPOSITION B.	500.0	429.0	70.7	SEP 79	DEC 81
5 78 4267	CONTINUOUS PROCESS FOR GRANULAR COMPOSITION B THE SCOPE OF WORK FOR THIS EFFORT WAS REVISED BASED ON FUNDING CHANGES.	254.0	9.0	108.4	MAR 81	JUN 82
5 78 4281	ENERGY SAVING AT ARMY AMMO PLANTS SEE THE FOLLOWING INDIVIDUAL TASKS FOR WORK STATUS.	1,059.4	750.1	144.5	MAR 80	SEP 82
5 78 4281 A01	PROCESS ENERGY INVENTORY DETAILED ENERGY AUDITS WERE PERFORMED AT KAAP ON EACH OF THE PROCESSES INVOLVED IN THE PRODUCTION OF M483 155MM ICM RDS. ENERGY CONSUMPTION BASE LINES WERE ESTABLISHED FOR ALL OF THE INDIVIDUAL OPNS ASSOCIATED WITH THIS ROUND.	178.2	108.1			DEC 81
5 78 4281 A04	ENERGY RECOVERY FROM WASTE HEAT RADFORD AAP HAS FINALIZED THE DESIGN OF THE HEAT EXCHANGER FOR THIS PROJECT. THE TWO HOT WATER STORAGE TANKS HAVE BEEN CONSTRUCTED.	324.9	272.0	52.5		SEP 82
5 78 4281 A05	ENERGY RECOVERY FROM WOOD WASTE TRW, INC'S FINAL REPORT ON THE FEASIBILITY OF USING WOOD WASTE AS AN ALTERNATE ENERGY SOURCE WAS RECEIVED. THE STUDY CONCLUDED THAT WOOD WASTE IS A VIABLE ALTERNATIVE TO FOSSIL FUELS AT NSTL/MSAAP.	75.0	75.0			MAR 80
5 78 4281 A06	CAVITATIONAL REMOVAL OF EXPLOSIVES TESTING OF THE REMOVAL OF EXPLOSIVES FROM LIVE 155MM SHELLS WITH A CAVITATING WATER JET WAS SUCCESSFULLY COMPLETED. THE CYCLE TIME WAS APPROXIMATELY TWO MINUTES. THIS IS A REDUCTION OF OVER 90% IN THE TIME REQUIRED USING CONVENTIONAL STEAM-OUT METHOD	296.8	275.0	21.8		JUN 82
5 79 4281	CONSERVATION OF ENERGY AT ARMY AMMUNITION PLANTS SEE THE FOLLOWING INDIVIDUAL TASKS FOR WORK STATUS.	1,285.0	695.3	539.4	JUL 80	DEC 82
5 79 4281 A01	PROCESS ENERGY INVENTORY THE MOST ACTIVE LINE (LINE 3) AT IAAP WAS SURVEYED. LINE 3 AUDIT WAS COMPLETED AND AN INTERIM REPORT WAS FORWARDED TO ARRADCOM. EVALUATION OF STEAM, ELECTRICITY, AND COMPRESSED AIR MEASUREMENTS IS UNDERWAY TO FORMULATE PLANS FOR IMPLEMENTATION.	242.0	111.9	87.9	JUL 80	SEP 81
5 79 4281 A02	OPTIMIZED INSULATION A COMPOUND INSULATING SCHEME HAS BEEN APPLIED TO THE SIDEWALL OF A NC BOILING TUB. AFTER 12 TUB CYCLES OF OPERATION, NO DETRIMENTAL EFFECTS ON THE INSULATION ARE OBVIOUS. A SCHEME FOR INSULATING THE TIP OF THE TUB IS BEING EVALUATED.	193.0	103.0	90.0	OCT 79	JAN 81

MANUFACTURING METHODS AND TECHNOLOGY PROGRAM
S U M M A R Y P R O J E C T S T A T U S R E P O R T
2ND SEMIANNUAL SUBMISSION CY 80 RCS DRCMT-301

PROJ NO.	TITLE + STATUS	AUTHORIZED ($000)	CONTRACT VALUES ($000)	EXPENDED LABOR AND MATERIAL ($000)	ORIGINAL PROJECTED COMPLETE DATE	PRESENT PROJECTED COMPLETE DATE
5 79 4281 A03	SYNTHETIC NATURAL GAS FOR PROCESS OPERATIONS A COMPREHENSIVE SURVEY OF FUEL REQUIREMENTS FOR PROCESS OPERATIONS AT RAAP WAS COMPLETED. AN ENGINEERING EVALUATION OF COAL GASIFICATION PROCESSES AND RELATED TECHNOLOGY IS CONTINUING.	208.0	189.0	19.0	SEP 79	DEC 82
5 79 4281 A04	ENERGY RECOVERY FROM WASTE HEAT A BIDDERS PACKAGE FOR CONSTRUCTION OF THE HEAT EXCHANGER WAS RELEASED BY RAAP. FOUR BIDS WERE RECEIVED AND ARE CURRENTLY BEING EVALUATED. A BIDDERS PACKAGE FOR INSULATION OF THE HOT WATER STORAGE TANKS IS BEING PREPARED.	515.0	239.0	276.0	JUN 80	SEP 82
5 79 4281 B04	WASTE HEAT RECOVERY IT WAS DETERMINED THAT FLUE GASES EXHAUSTED FROM THE FORGE FURNACE CONTAINED 11.7 MBTU/HR AND 10.7 MBTU/HR DURING PERIODS OF PRODUCTION AND IDLING RESPECTIVELY. APPROXIMATELY 8000 LBS/HR OF STEAM CAN BE PRODUCED FROM THE EXHAUST OF EACH FORGE FURNACE.	127.0	44.4	66.5	AUG 79	DEC 81
5 80 4281	CONSERVATION OF ENERGY AT ARMY AMMUNITION PLANTS SEE THE FOLLOWING INDIVIDUAL TASKS FOR WORK STATUS.	1,234.0	919.0	231.8	JUN 82	MAR 83
5 79 4285	TNT EQUIVALENCY TESTING FOR SAFETY ENGINEERING FINAL TECHNICAL REPORTS COMPLETED ON TNT EQUIVALENCIES OF NITROCELLULOSES COMPOSITION C4, M483 PROJECTILE, M42 GRENADE TRAY, LX14 AND COMPOSITION A3.	420.0	201.7	212.2	MAY 80	JUN 81
5 80 4285	TNT EQUIVALENCY TESTING FOR SAFETY ENGINEERING TEST PLANS FOR JA2, DIGL-RP, CYCLUTOL 70130, AND FBXC-203 HAVE BEEN PREPARED AND SENT TO SAFETY FOR APPROVAL.	408.0	174.8	39.4	MAY 81	JUN 82
5 81 4285	TNT EQUIVALENCY TESTING FOR SAFETY ENGINEERING THIS PROJECT WAS JUST FUNDED. NO STATUS REPORT IS REQUIRED.	441.0				
5 79 4288	EXPLOSIVE SAFE SEPARATION AND SENSITIVITY CRITERIA TESTING HAS BEEN COMPLETED FOR 155MM M795 HE AND 30MM XM789 HEDP PROJECTILES AND M42/M46 GRENADE RING PACKS. TESTING OF 155MM AND 8INCH WEAPON SYSTEMS IS PARTIALLY COMPLETED.	643.0	177.3	417.4	OCT 80	DEC 80
5 80 4288	EXPLOSIVE SAFE SEPARATION AND SENSITIVITY CRITERIA VERTICAL AND HORIZONTAL POSITION DISTANCES FOR THE 105MM M456 HEAT-T PROJECTILE WAS ESTABLISHED. TEST CONDITIONS FOR THE DETONATOR INSPECTION MACHINE TEST WERE ESTABLISHED. CONTRACT AWARDED TO SW RESEARCH INST FOR STUDY OF SAFE SEPARATION OF BUCKETS.	767.0	286.0	138.6	SEP 81	SEP 81
5 81 4288	EXPLOSIVE SAFE SEPARATION AND SENSITIVITY CRITERIA THIS PROJECT WAS JUST FUNDED. NO STATUS REPORT IS REQUIRED.	720.0				

MANUFACTURING METHODS AND TECHNOLOGY PROGRAM
S U M M A R Y P R O J E C T S T A T U S R E P O R T
2ND SEMIANNUAL SUBMISSION CY 80 RCS DRCMT-301

PROJ NO.	TITLE + STATUS	AUTHO-RIZED ($000)	CONTRACT VALUES ($000)	EXPENDED LABOR AND MATERIAL ($000)	ORIGINAL PROJECTED COMPLETE DATE	PRESENT PROJECTED COMPLETE DATE
5 79 4291	BLAST EFFECTS IN THE MUNITIONS PLANT ENVIRONMENT REPORT COMPLETED ON BLAST CAPACITY OF STRENGTHENED STEEL BUILDINGS. THIS WILL PROVIDE DATA FOR DESIGN OF ECONOMICAL BLAST RESISTANT STEEL BUILDINGS. REPORT ON BLAST CAPACITY OF COLD FORMED STEEL PANELS WAS COMPLETED.	235.0	80.0	107.8	SEP 80	JUN 81
5 80 4291	BLAST EFFECT IN THE MUNITION PLANT ENVIRONMENT ANALYTICAL STUDIES PERFORMED ON DEVELOPMENT OF DESIGN CRITERIA FOR USING ALTERNATE CONSTRUCITON MATERIALS (WOOD, CLAY TILE, BRICK, PRE-CAST CONCRETE, METAL PANEL) IN THE BLAST ENVIRONMENT.	100.0		23.4	AUG 82	SEP 81
5 77 4301	ACCEPT PLAN-CONT PRODUCTION MULTI-BASE CANNON PROPELLANTS PRELIMINARY TESTS OF THE DYNAGUN WITH PROPELLANT HAVE BEEN CONDUCTED. BALLISTIC TEST OF LOTS OF M30A1 PROPELLANT HAS BEEN ACCOMPLISHED AT THE PROVING GROUND. DESIGN CHANGES HAVE BEEN IMPLEMENTED IN THE DYNAGUN DURING DEBUGGING PROCEDURES.	559.0	261.0	293.0	MAY 78	MAR 81
5 76 4303	ACCEPTANCE OF CONTINUOUSLY PRODUCED BLACK POWDER THE FLAMESPREAD TESTER DEVELOPED BY PRINCETON COMBUSTION RESEARCH LABORATORIES WAS INSTALLED AT INDIANA AAP, WHERE IT WILL BE DEBUGGED PRIOR TO USE DURING PROVEOUT OF THE BLACK POWDER FACILITY.	363.0	183.7	170.3	APR 77	APR 81
5 79 4305	PLN TECH FOR IMPROVED WP 155MM SMOKE MUNITION (XM825) DEBUGGING OPERATIONS OF FILLING EQUIPMENT WAS COMPLETED. PREPARED SOP FOR FILLING. WORK ON DRAFT OF PROCESS BASELINE WAS CONTINUED. PREPARATION OF TECHNICAL REPORT WAS INTIATED.	265.0		257.0	JUN 80	MAR 81
5 79 4309	PROCESS DEVELOPMENT FOR 120MM TANK AMMUNITION SEE SUBTASKS BELOW FOR INDIVIDUAL WORK STATUS.	847.6	516.1	329.5	NOV 80	JUN 81
5 79 4309 01	DEVELOP MFG METHODS FOR STICK AND JA-2 PROPELLANT PROCESS STUDIES FOR JA-2 AND LICL-RP PROPELLANT WERE COMPLETED FRM PASTE PREP THRU EXTRUSION OF A 4 IN. PRESS. WORK ON DIES F/15 IN. PRESS WAS INITIATED. ROLL TYPE CUTTERS FOR 85 AND 355MM STICKS BEING FABRICATED. PNEUMATIC TUBE CONVEYOR WAS TESTED.	654.0	514.0	139.0	DEC 81	JUN 81
5 79 4309 02	EXPLOSIVE LOADING OF 120MM HEAT-MP MONITORING EFFORTS CONTINUED ON THE R&D PRESS LOADING EFFORTS. A GERMAN FORMULATION OF 95/5 RDX/WAX WITH A 1% GRAPHITE ADDITION WAS PROVIDED TO HONEYWELL FOR PRESS LOADING THE XM830 PROJ. GERMAN EXPLOS MFG SPECS WERE NOT FOLLOWED. SOME PROBLEMS EXIST.	193.6	2.1	190.5	DEC 80	MAR 81
5 80 4309	PROPELLANT PROCESS DEVELOPMENT FOR 120MM TANK AMMUNITION A CONTRACT FOR THE FY80 MMT EFFORT WAS SUCCESSFULLY NEGOTIATED WITH HONEYWELL, INC. FOR INDIVIDUAL WORK STATUS, SEE SUBTASKS BELOW.	3,726.0	3,324.0	186.4	JUN 82	JUN 83

MANUFACTURING METHODS AND TECHNOLOGY PROGRAM
S U M M A R Y P R O J E C T S T A T U S R E P O R T
2ND SEMIANNUAL SUBMISSION CY 80 RCS DRCMT-301

PROJ NO.	TITLE + STATUS	AUTHO-RIZED ($000)	TRACT VALUES ($000)	EXPENDED LABOR AND MATERIAL ($000)	ORIGINAL PROJECTED COMPLETE DATE	PRESENT PROJECTED COMPLETE DATE
5 80 4309 01	DEVELOP MFG METHODS FOR STICK AND JA-2 PROPELLANT FY80 FUNDS WERE RECENTLY RECEIVED WHICH WILL PROVIDE FOR TECHNICAL DIRECTION OF THE RADFORD AAP EFFORT.	1,746.0	1,592.0	65.6	DEC 82	JUN 83
5 80 4309 02	EXPLOSIVE LOADING OF 120MM HEAT-MP FY80 FUNDS ALLOCATED TO THIS SUBTASK LATE IN 1980. NO WORK REPORTED.	273.0	186.0	18.5	DEC 82	JUN 83
5 80 4309 03	ASSEMBLY PROCESS DEVELOPMENT MASON&HANGER AT IAAP PREPARED CONCEPTS AND PROCESS BREAKDOWNS FOR PROBLEM AREAS COVERED IN FY80 SOW. CONCEPTS ARE BEING ANALYZED. HONEYWELL IS IN PROCESS OF NEGOTIATING A CONTRACT WITH MASON & HANGER TO EXECUTE THE EFFORTS REQUIRED FOR TASK 3.	685.0	597.0	42.2	JUN 82	JUN 83
5 80 4309 06	PROCESS FOR MOLDING REAR SEAL,120MM APDS PROCUREMENT PACKAGES WERE DEVELOPED AND THE CONTRACT WAS AWARDED TO HONEYWELL. A LITERATURE SEARCH AND LABORATORY TESTING ON ADHESIVES WAS INITIATED.	919.0	874.0	32.1	JUN 82	JUN 83
5 80 4309 09	INVESTIGATE FORMING + HEAT TREAT METHODS FOR CORE,APDS FUNDS WERE RECENTLY RECEIVED. A SYSTEMS CONTRACT WAS LET TO HONEYWELL. THE SUB CONTRACT FOR TASK 9 HAS NOT YET BEEN PLACED. WORK ON THIS TASK IS BEING DELAYED UNTIL THE ITEM CONFIGURATION IS DEFINED.	103.0	75.0	28.0	JUN 82	JUN 83
5 79 4310	DMSO RECRYSTALLIZATION OF HMX/RDX FINISHED EXPLOSIVES MADE FORM DMSO RECRYSTALLIZED RDX/HMX WERE SHIPPED TO LONE STAR AND LOUISIANA AAP FOR ENG ITEM TESTING. AT LSAAP M112 DEMO CHARGES WERE LOADED WITH COMP C-4. AT LONE STAR, M55 DETONATORS WERE MANUFACUTRED WITH RDX.	491.6	302.6	103.2	DEC 81	DEC 81
5 80 4310	DMSO RECRYSTALLIZATION OF RDX/HMX SENSITIVITY AND COMPATIBILITY TESTS WITH DMSO RECRYSTALLIZED MATERIAL WAS INITIATED. EARLY RESULTS INDICATE NO SIGNIFICANT DIFFERENCES BETWEEN DMSO RECRYSTALLIZED AND STANDARD MATERIAL.	276.0		86.1	JUN 81	DEC 81
5 77 4311	DEVELOP AUTOMATED PRODUCTION EQUIPMENT FOR XM 692 SUSPENSION WAS RESOLVED AND WORK RESUMED. TOOLING FOR OVERLAY PRODUCTION WAS FIXED AFTER SEVERAL OVERLAY SAMPLES WERE PRODUCED. FINAL ASSEMBLY MACHINE AND LEAK TESTER WERE DELETED FROM PROJECT. TWO MACHINES ARE IN PRODUCTION AND TWO WERE 90% DEBUGGED	1,452.9	1,114.6	255.3	AUG 78	SEP 81
5 79 4312	INJECTION MOLDING FOR PRODUCTION EXPLOSIVE LOADING DRAWINGS FOR MODEL 2 INJECTION MOLDING UNIT WERE REVIEWED AND CHANGES RECOMMENDED. FABRICATION OF MODEL 2 DESIGN WAS COMPLETED. A TEST PLAN AND HAZARDS ANALYSIS WAS PREPARED.	261.0	181.2	75.6	JUN 80	JUN 81

MANUFACTURING METHODS AND TECHNOLOGY PROGRAM
S U M M A R Y P R O J E C T S T A T U S R E P O R T
2ND SEMIANNUAL SUBMISSION CY 80 RCS DRCMT-301

PROJ NO.	TITLE + STATUS	AUTHO-RIZED ($000)	CONTRACT VALUES ($000)	EXPENDED LABOR AND MATERIAL ($000)	ORIGINAL PROJECTED COMPLETE DATE	PRESENT PROJECTED COMPLETE DATE
5 80 4312	INJECTION MOLDING FOR PRODUCTION EXPLOSIVE LOADING TEST PLAN AND HAZARDS ANALYSIS WAS PREPARED.	279.0	125.0	62.6	JUL 81	JUN 81
5 79 4322	MMT DESIGN/CHAR OF ELEC CONT SYST FOR PROD FAC FIRST REACTIVATION AT VOLUNTEER AAP IS COMPLETED AND USER ADAPTED START-UP MANUAL SUBMITTED FOR REVIEW. DATA BASE FOR GENERATING RELIABILITY PREDICTION MODEL FOR JOLIET AAP AND VOLUNTEER AAP FACILITIES WAS ESTABLISHED.	609.0	289.0	308.8	FEB 80	SEP 81
5 80 4322	CHARACTERIZE DORMANCY EFFECT ON ELECTRONIC EQUIPMENT ALL FUNDS FOR FYRC OBLIGATED AT AAPS. SET OF LAYAWAY/READINESS PROCEDURES DEVELOPED INTO MATRIX FORMAT TO PERMIT COMPREHENSIVE LAYAWAY PLANNING. "THIRD PARTY" OPERABILITY MANUALS COMPLETED IN USER ADAPTED FORM FOR JOLIET AAP.	515.0	317.5	36.7	APR 82	APR 82
5 79 4335	ALTERNATIVE PROC F/TITANIUM GYROSCOPE COMPONENTS-COPPERHEAD 4 OF THE 5 GYRO PARTS HAVE BEEN SUCCESSFULLY FABRICATED USING SELECTED POWDER METAL PROCESSES. TENSILE TESTS OF BOTH COMMERCIALLY PURE TI AND TI-6AL-4V TI ALLOY HAVE BEEN PERFORMED TO VERIFY PROPERITES.	411.0	386.0	10.3	FEB 81	JUN 81
5 78 4341	IMPROVED NITROCELLULOSE PURIFICATION PROCESS THE CONICELL WAS SUCCESSFULLY HYDROSTATICALLY TESTED. ALL MAJOR COMPONENTS OF THE NC PURIFICATION PROCESS PILOT PLANT ARE NOW ON SITE AT RAAP. ASSEMBLY OF THE UNIT IS BEING DEFERRED UNTIL THE CONCRETE PAD IS POURED	734.9	644.9	90.0	APR 79	SEP 81
5 79 4341	IMPROVED NITROCELLULOSE PURIFICATION PROCESS A SUBCONTRACT WAS LET FOR THE CONSTRUCTION OF THE BLDG TO HOUSE THE CONICELL. THE COMPLETION DEADLINE IS 31 DEC 80. INSTALLATION OF THE CONICELL IS SCHEDULED FOR COMPLETION BY 26 FEB 81. PREPARATION OF THE SOP'S WAS BEGUN.	742.0	673.0	69.0	NOV 80	SEP 81
5 80 4341	IMPROVED NITROCELLULOSE PRUIFICATION PROCESS RAAP WAS REQUESTED TO IDENTIFY THOSE PROPERTIES OF NC WHICH AFFECT ITS PROCESSING INTO MILITARY PROPELLANTS AND ANY OTHERS THAT AFFECT ITS PERFORMANCE. A CONTROL SYST FUNCTIONAL CRITERIA WAS INITIATED. A COST GROWTH OF $50K FOR CONSISTENCY CONTROLLER	583.0	413.0	120.0	DEC 81	DEC 81
5 81 4341	IMPROVED NITROCELLULOSE PURIFICATION PROCESS THIS PROJECT WAS JUST FUNDED. NO STATUS REPORT IS REQUIRED.	765.0				
5 80 4344	ESTAB OF WASTE DISPOSAL TECH FOR MEBT BINARY PROJECT REVIEW AND ANALYSIS OF PRIOR OF PRODUCTION WASTE WORK WAS COMPLETED. INITIATED EFFORT ON EVALUATION OF ALTERNATIVE PROCESSES FOR WASTE TREATMENT. PREPARED AND SUBMITTED RFP FOR REVIEW OF INDUSTRIAL EFFORTS ON OF.	108.0		72.5	DEC 82	DEC 82

MANUFACTURING METHODS AND TECHNOLOGY PROGRAM
S U M M A R Y P R O J E C T S T A T U S R E P O R T
2ND SEMIANNUAL SUBMISSION CY 80 RCS DRCMT-301

PROJ NO.	TITLE + STATUS	AUTHO-RIZED ($000)	CONTRACT VALUES ($000)	EXPENDED LABOR AND MATERIAL ($000)	ORIGINAL PROJECTED COMPLETE DATE	PRESENT PROJECTED COMPLETE DATE
5 81 4344	ESTAB OF WASTE DISPOSAL TECH FOR M687 BINARY PROJECT THIS PROJECT WAS JUST FUNDED. NO STATUS REPORT IS REQUIRED.	200.0				
5 78 4349	MODERNIZATION OF PRESS LOADING FOR HEP PROJECTILES PROTOTYPE COMPLETED. INERT TEST COMPLETED. PRESS WILL HAVE TO BE SENT TO ANOTHER FACILITY FOR LIVE LOADING. REVISED PROJECT COMPLETION DATE IS DEC 81.	250.0		250.0	JUN 80	DEC 81
5 80 4357	NONDESTRUCTIVE TEST EQUIP F/LARGE CALIBER MUNITIONS F/M483A1 THE SCOPE OF WORK WAS FINALIZED AND THE RFP HAS BEEN MADE AVAILABLE TO THE PROSPECTIVE CONTRACTORS. THE CONTRACTOR'S PROPOSALS HAVE BEEN EVALUATED AND THE CONTRACT AWARD IS IN PROCESS.	556.0		22.2	JUN 83	JUN 83
5 80 4411	SMALL CALIBER AMMUNITION PROCESS IMPROVEMENT PROGRAM CONTRACT PLACED WITH LCAAP ON 29SEPT80. NEW ELECTRONICS WERE INSTALLED AND EVALUATION IS UNDERWAY. THIS IS A CONTINUATION OF THE 6200 SERIES OF PROJECTS.	280.0	190.0	40.0	DEC 83	DEC 83
5 80 4417	PROCESS TECHNOLOGY FOR BLENDING RP SMOKE COMPOSITIONS FUNDS RECEIVED IN OCT 80. SCOPE OF WORK COMPLETED INDICATING EQUIPMENT TO BE USED AND TECHNICAL OBJECTIVES. INITIATED RESTORATION OF AIRMIX MIXER FOR USE.	115.0		5.0	MAY 81	MAY 81
5 78 4444	BODY FOR M42/M46 GRENADE CONTRACTS AWARDED TO DAYRON CORP. AND ME ASSOC. DAYRON HAS COMPLETED DESIGN STAGE. ME ASSOC. HAS SUBMITTED DESIGN DRAWINGS FOR ONE PIECE M46 BODY.	626.0	434.3	189.7	JUN 79	FEB 82
5 79 4444	BODY FOR M42/M46 GRENADE CONTRACTS HAVE BEEN AWARDED.	563.0	144.7	26.9	SEP 80	OCT 82
5 78 4454	AUTO INSPECTION DEVICE FOR EXPLOSIVE CHARGE IN SHELL-CAM SEE PROJECT 5 80 4454 FOR STATUS. THE FUNDING STATUS FOR THIS PORTION OF THE EFFORT HAS BEEN COMBINED WITH THE FY79 & FY80 AND IS DISPLAYED WITH THE FY80 PROJECT INFORMATION.				JUL 80	MAY 82
5 79 4454	AUTO INSPECTION DEVICE FOR EXPLOSIVE CHARGE IN SHELL-CAM SEE PROJECT 5 80 4454 FOR STATUS. THE FUNDING STATUS FOR THIS PORTION OF THE EFFORT HAS BEEN COMBINED WITH THE FY78 & FY80 AND IS DISPLAYED WITH THE FY80 PROJECT INFORMATION.				DEC 81	MAY 82
5 80 4454	AUTO INSP DEVICE EXPLOS CHARGE SHELL (AIDECS) SEE SUBTASKS BELOW FOR PROJECT STATUS.	3,374.0	2,665.2	707.0	APR 82	MAY 82

MANUFACTURING METHODS AND TECHNOLOGY PROGRAM
S U M M A R Y P R O J E C T S T A T U S R E P O R T
2ND SEMIANNUAL SUBMISSION CY 80 RCS DRCMT-301

PROJ NO.	TITLE + STATUS	AUTHO-RIZED ($000)	CONTRACT VALUES ($000)	EXPENDED LABOR AND MATERIAL ($000)	ORIGINAL PROJECTED COMPLETE DATE	PRESENT PROJECTED COMPLETE DATE
5 80 4454 01	AUTOMATIC INSPECTION DEVICE FOR EXPLOSIVE CHARGE IN SHELL (A THE PROGRAM HAS BEEN RESTRUCTURED TO PRODUCE A 155M PRODUCTION PROTOTYPE SYS THAT WILL BE TESTED AT THE CONTRACTOR'S. A SUCCESSFUL DEMONSTRATION WAS CONDUCTED AT THE CONTRACTOR FACILITY IN JULY 1980.				APR 82	MAY 82
5 80 4454 02	AUTOMATIC X-RAY INSPECTION SYSTEM (AXIS) THE PROPOSAL FOR THE COST INCREASE HAS BEEN REVIEWED AND THE CONTRACT HAS BEEN AWARDED. THE FABRICATION OF THE OPTICAL SYSTEM HAS BEEN COMPLETED AND IS BEING INSTALLED IN THE SYSTEM. THE PACKAGING OF THE COMPUTER SOFTWARE DOCUMENTATION HAS STARTED.				AUG 80	MAR 81
5 81 4454	AUTO INSP DEVICE EXPLOS CHARGE SHELL (AIDECS) THIS PROJECT WAS JSUT FUNDED. NO STATUS REPORT IS REQUIRED.	1,885.0				
5 79 4460	CONT MIXER-ILLUMINANT COMP ANAL + CONTROL SYSTEM VENDOR SYSTEM EVALUATION, PRELIMINARY HAZARD ANALYSIS AND EQUIPMENT SELECTION IS COMPLETE. THE X-RAY FLUORESCENCE SYSTEM WAS SELECTED FROM THREE SYSTEMS EVALUATED, BASED ON TEST DATA AND MINIMAL INSTALLATION REQUIREMENTS. FINAL TECH REP BEING WRITTEN	236.0	114.0	122.0	DEC 80	JUN 81
5 79 4462	MODERNIZED FAD FOR MULTI-BASE PROPELLANTS 10 PROPELLANT DRYING RUNS WERE CONDUCTED ON M30, M30A1, & M31A1 IN THE MODERNIZED FAD BAY. 20% MORE PROPELLANT WAS CAPABLE OF BEING DRIED THAN IN A CONVENTIONAL BAY. A SOLVENT ABSOREER WAS ORDERED.	526.0	396.0	123.3	JUL 80	JUN 81
5 80 4462	FORCED AIR DRY FOR MULTI-BASED PROPELLANTS USE OF A HEAT PIPE IN THE PROCESS WAS FOUND NOT TO BE COST EFFECTIVE AND WAS DELETED FROM THE FY80 S.O.W. A CONTROL SYSTEM FUNCTIONAL CRITERIA BROCHURE WAS PREPARED FOR RADFORD AAP REVIEW.	850.0	509.0	116.4	SEP 80	JUN 82
5 79 4466	EVAL TNT, CYCLOTOL, OCTOL IN MELT-POUR FACILITY COST GROWTH OF $239K WAS APPROVED TO ASSURE A COMPLETE EVALUATION OF THE TNT SOLIDS MIXER WITH LIVE EXPLOSIVES. FABRICATION OF S. HOWES MIXER WAS INITIATED. FLOOR AREAS WERE PREPARED FOR EQUIPMENT INSTALLATION.	461.0	152.1	181.3	APR 81	MAR 82
5 79 4469	AUTOMATIC INSERTION OF GRENADE LAYERS FINAL DSN DRWNGS FOR THE GRENADE INSERTION SYSTEM WERE COMPLETED. NECESSARY COMPONENTS WERE ORDERED. THE M483 AND M509 RETENTION RING DESIGNS WERE TESTED AND ACCEPTED. THE GRENADE PREPACK ASSEMBLY EQUIPMENT CONCEPTS WERE FINALIZED.	1,150.0	871.0	111.8	JAN 80	DEC 82
5 80 4469	AUTOMATIC INSERTION OF GRENADE LAYERS PRELIMINARY ACCEPTANCE TEST PLANS WERE DEVELOPED.	350.0	177.8	2.4	JAN 81	MAR 82

MANUFACTURING METHODS AND TECHNOLOGY PROGRAM
S U M M A R Y P R O J E C T S T A T U S R E P O R T
2ND SEMIANNUAL SUBMISSION CY 80 RCS DRCMT-301

PROJ NO.	TITLE + STATUS	AUTHO-RIZED ($000)	CONTRACT VALUES ($000)	EXPENDED LABOR AND MATERIAL ($000)	ORIGINAL PROJECTED COMPLETE DATE	PRESENT PROJECTED COMPLETE DATE
5 79 4474	DEHUMIDIFIED AIR FOR DRYING SINGLE- BASE PROPELLANT BENCH SCALE EQUIPMENT FOR DRYING SINGLE BASE PROPELLANT WITH DEHUMIDIFIED AIR HAS BEEN SET UP AND IS CURRENTLY BEING DEBUGGED. TEST DRYING RUNS ARE PROJECTED TO START IN THE NEAR FUTURE.	175.0	100.0	74.6	AUG 80	DEC 81
5 80 4480	HIGH SPEED HEAD TURN TOOL MOD F/SC AMMO PROD SOW HAS BEEN APPROVED. CONTRACT AWARD WILL BE DEFERRED UNTIL RECENTLY COMPLETED IMPROVEMENTS TO THE HEAD TURN TURRET HAVE BEEN EVALUATED. THIS IS TO INSURE NON-DUPLICATION OF EFFORTS.	184.0		2.0	SEP 82	SEP 82
5 80 4464	IMPR HI-SPEED WATERPROOFING APPL F/SC AMMO A SCOPE OF WORK WAS PREPARED. LEGALLY CONCURRED IN AND SENT TO ARRCOM. THIS WILL THEN BE SENT TO LAKE CITY FOR THEIR COST ESTIMATE.	126.0		2.0	MAR 82	MAR 82
5 79 4498	CONSOLIDATION + AUTOMATIC ASSEMBLY OF SMALL PIECES DESIGNS WERE APPROVED FOR AUTOMATED LENS TESTER AND AUTOMATED SOLDERING MACHINE. CONTRACTOR IS PROCEEDING WITH FABRICATION OF EQUIPMENT TO THESE DESIGNS. END ITEM COMPONENTS WERE COLLECTED FOR PROVE-OUT OF EQUIPMENT.	572.0	500.0	45.2	SEP 80	MAR 82
5 80 4498	DEV METH FOR CONSOL AND AUTO ASSY OF SMALL PIECES CONTRACT WAS AWARDED TO AUTOMATED PROCESSES FOR MECHANIZED ASSEMBLY EQUIPMENT. A PRELIMINARY DESIGN REVIEW WAS HELD AND CONTRACTOR IS PROCEEDING WITH THE FINAL DESIGN OF FIXTURES.	392.0	212.1	0.5	DEC 81	SEP 82
5 79 4508	PROCESS IMPROVEMENT OF PRESSABLE RDX COMPOSITIONS THE FINAL REPORT ON THE WOLVERINE JET ZONE DRYER WAS ISSUED. THE COMP A-7 DUSTING PROBLEMS WERE ELIMINATED BY IMPLEMENTING THE MODIFICATIONS RECOMMENDED IN THE REPORT. REMAINING FUNDS TO BE USED FOR INSTALLING & DEBUGGING THE WYSSMONT TURBO DRYER SYS	357.0	289.0	68.0	DEC 79	SEP 81
5 80 4508	PROCESS IMPROVEMENT OF PRESSABLE RDX COMPOSITIONS PRELIMINARY DRAWINGS FOR WYSSMONT TURBO DRYER WERE REVIEWED. PURCHASE ORDER FOR MERRICK GRAVIMETRIC WEIGHFEEDER WAS PLACED. ENGINEERING DESIGN & DRAWINGS FOR INSTALLATION OF WYSSOMNT DRYER INITIATED. LEGAL LIABILITIES FOR USE OF DRYER BEING DISCUSSED	506.0	334.0	73.6	APR 82	JUN 82
5 76 6200	SMALL CALIBER AMMO PROCESS IMPROVEMENT PROGRAM THE CARTRIDGE MEASUREMENT AND EJECT SYSTEM WILL NOT BE RECOMMENDED FOR IMPLEMENTATION SINCE IT IS NOT COST EFFECTIVE. A FINAL REPORT FOR THIS PROJECT IS BEING PREPARED.	1,298.0	296.0	1,002.0	AUG 76	JUN 81
5 77 6200	SMALL CALIBER AMMO PROCESS IMPROVEMENT PROGRAM THE CUPPING PRESS AND ADDITIONAL TOOLING ARE BEING PACKED FOR SHIPMENT TO OLIN CORPORATION. THE OLIN CONTRACT WAS MODIFIED TO COVER THE SLIGHTLY INCREASED PRODUCTION COST USING THE BLISS NO 6 PRESS.	1,216.0	1,087.0	74.4	FEB 78	JUN 81

MANUFACTURING METHODS AND TECHNOLOGY PROGRAM
S U M M A R Y P R O J E C T S T A T U S R E P O R T
2ND SEMIANNUAL SUBMISSION CY 80 RCS DRCMT-301

PROJ NO.	TITLE + STATUS	AUTHO-RIZED ($000)	CONTRACT VALUES ($000)	EXPENDED LABOR AND MATERIAL ($000)	ORIGINAL PROJECTED COMPLETE DATE	PRESENT PROJECTED COMPLETE DATE
5 76 6472	APPLN OF ALT PROCES FOR FAB OF PRECIS METAL PARTS FOR MTFUZE ALL EXPERIMENTAL WORK AT BATTELLE HAS BEEN COMPLETED. EXTRUDED STOCK WILL BE SENT TO DEVON TO BE TURNED INTO PINIONS.	383.0	329.3	50.9	FEB 78	JAN 81
5 7T 6494	NEW CONCEPTS FOR MFR AND INSPECT OF 20MM 25MM 30MM AMMO ALL REMAINING TASKS ASSOCIATED WITH THESE PROJECTS HAVE NOW BEEN CANCELLED. A FINAL REPORT IS BEING PREPARED.	1,079.0	963.0	66.0	AUG 79	JUN 81
5 75 6494	MANUFACTURE AND INSPECTION OF CAL.50, 20MM, AND 30MM AMMO THE FUZE TO PROJECTILE ASSEMBLY EFFORT BEING REPORTED UNDER THIS FY OF THE EFFORT HAS BEEN TERMINATED.	3,760.0	2,256.0	1,452.0	DEC 76	JUN 81
5 76 6494	MANUFACTURE AND INSPECTION OF CAL.50, 20MM, AND 30MM AMMO HEI CHARGING- THIS EFFORT WAS ALSO CANCELLED.	1,196.0	819.0	377.0	DEC 77	JUN 81
5 77 6494	NEW CONCEPTS FOR MFR AND INSPECT OF 20MM 25MM 30MM AMMO BALLISTIC TEST SUBMODULE-THIS EFFORT WAS ALSO CANCELLED.	573.0	46.0	498.0	JUN 79	JUN 81
5 76 6557	CONTINUOUS PROPELLANT DRYING SALT COATING AND GLAZING. A 28-HOUR CONTINUOUS TEST WAS MADE ON THE FLUID BED DRYER. RESULTS WERE WITHIN SPEC OF BALL PROPELLANT. A FINAL REPORT COVERING THE ENTIRE PROJECT WAS RECENTLY SUBMITTED FOR PUBLICATION.	862.0	811.0	51.0	DEC 76	JAN 81
5 78 6596	BALL PROPELLANT PILOT PLANT STUDIES 10 AND 100 GAL CYCLE TIME STILL WORK COMPLETE- 1000 GAL STILL BEGUN. MAXIMUM YIELD STUDIES COMPLETE- DATA ANALYSIS BEGUN. IN EXTERNAL LACQUER HANDLING STUDIES IT NOW APPEARS THAT BOTH 30PCT A D 70PCH H20 NITROPULP CAN BE TRANSFERRED WITH VIKING PUMP	1,618.0	1,475.0	67.0	JAN 79	JUL 81
5 76 6599	2ND GENER ELEC-OPTIC PROJO CAVITY INS EQ FOR 155-175MM PROJOS THE COST GROWTH WAS SETTLED IN AUG 1980. THE CONTRACTOR STARTED WORK IN DEC 1980 AND NOW THE WORK IS PROGRESSING SATISFACTORILY.	198.0	181.1	8.5	SEP 77	JUL 81
5 77 6632	AUTO INSPECTION DEVICES FOR ART PROJECTILES IN MOD PLANTS THE FLASH HOLE DETECTION SYSTEM WAS FABRICATED. DEV OF THE HOT FORG INSPECTION DEVICE AND THE FILLET TESTER WERE DISCONTINUED. THE OGIVE SYS WAS COMPLETED AND SHIPPED TO ARRADCOM. PARTS FOR THE BASE SYSTEM WERE DELIVERED TO ARRADCOM.	586.1	340.7	132.4	SEP 78	MAR 81
5 78 6634	MFG DU ALLOYS FOR LARGE CALIBER ARMOR DEFEATING PROJECTILE DATA GENERATED AT NATIONAL LEAD OF OHIO HAS BEEN ANALYZED AND A FINAL REPORT IS BEING WRITTEN.	400.0		400.0	FEB 79	JUN 81
5 79 6634	MFG DU ALLOYS FOR LARGE CALIBER ARMOR DEFEATING PROJECTILE FY78 FINAL REPORT IS BEING WRITTEN. THREAD FORMING TASK IS COMPLETE. CHIP RECYCLING TASK IS STARTED WITH A CONTRACT AWARDED TO NUCLEAR METALS INC.	542.0	334.0	200.0	AUG 80	JUN 82

MANUFACTURING METHODS AND TECHNOLOGY PROGRAM
S U M M A R Y P R O J E C T S T A T U S R E P O R T
2ND SEMIANNUAL SUBMISSION CY 80 RCS DRCMT-301

PROJ NO.	TITLE + STATUS	AUTHO-RIZED ($000)	CONTRACT VALUES ($000)	EXPENDED LABOR AND MATERIAL ($000)	ORIGINAL PROJECTED COMPLETE DATE	PRESENT PROJECTED COMPLETE DATE
5 77 6640	PROD CONTROL/QA OF SHAPED CHG LINERS BY AUTO X-RAY ANAL SEVENTY PERCENT OF SAMPLE PROJECTILES HAVE BEEN STATIC SPIN TESTED. X-RAY SPECIMENS HAVE BEEN FABRICATED AND ARE BEING EVALUATED. RESULTS INDICATE THAT LINERS FROM CROSS ROLLED MATERIAL PRODUCED MORE CONSISTENT PENETRATION THAN CONVENTIONAL LINERS.	174.6	49.6	90.6	JUN 78	SEP 81
5 79 6682	SIMULATION OF AMMUNITION PRODUCTION LINES THE GENMOD PROGRAM AND BIONOMIAL DISTRIBUTION METHOD WERE USED TO SIMULATE THE METAL PARTS PRODUCTION LINE AT MSAAP FOR 155MM M483. THE RESULTS OF A BUFFER ANALYSIS BECAME THE CRITERIA FOR EVALUATION OF PROPOSALS FOR MATERIAL HANDLING EQUIPMENT.	170.0		170.0	NOV 80	MAR 82
5 79 6693	BALL PROPELLANT DETERRENT COATING-CAM RELATED CORRELATION OF ARRADCOM-DEVELOPED EXPERIMENTAL DATA COMPLETED BY NO CAROLINA STATE UNIV. DESIGN OF PILOT PLANT COATING PROCESS IS COMPLETE AND MOST PURCHASED PARTS HAVE BEEN RECEIVED BY CONTRACTOR-MRD CORP. $4,500 CONTRACT MODIFICATION PLANNED.	171.0	27.5	125.6	NOV 80	SEP 81
5 79 6716	MATH MODEL OF FORMING OPERATIONS FOR ARTILLERY DESIGN CONFIRMATION TEST FOR THE COLD AND HOT NOSING OPERATIONS WERE CONDUCTED. COMPUTERIZED MATH MODELS FOR THE CABBAGING AND PIERCING OPERATIONS HAVE BEEN COMPLETED AND TESTED. AN 81 PROJECT IS PLANNED TO INTEGRATE ALL OF THESE MATH MODELS.	306.0	270.0	36.0	JUN 80	JUN 81
5 80 6736	TECH READINESS ACCEL THRU COMPUTER INTEGRATED MFG (CAM) PRELIMINARY PLANNING FOR TECHNOLOGY TRANSFER IS CONTINUING. DEVELOPMENT OF THE DATA BASE STRUCTURE AND INPUT/OUTPUT FORMATS IS PROGRESSING.	315.0	183.8	84.2	OCT 81	JUN 82
5 79 6738	USE OF ULTRA-HI SURFACE SPEEDS F/METAL REMOVAL, ARTY SHELL PLASMA ARC MACHINING TESTS AT WVA WERE UNSUCCESSFUL. ADDITIONAL TESTS WILL BE MADE IN TOOL ROOM ENVIRONMENT.HIGH SPEED MACHINING TESTS ON 4 DIFFERENT ARTILLERY SHELL STEELS ARE UNDERWAY. TESTS WERE INTERUPTED DUE TO CONTRACTOR'S COMMERCIAL ACTIVITIES	181.0	148.9	24.3	SEP 80	SEP 81
5 80 6736	ULTRA-HIGH SPEED METAL REMOVAL, ARTILLERY SHELL PLASMA ARC MACHINING TESTS AT WVA WERE UNSUCCESSFUL. ADDITIONAL TESTS WILL BE MADE IN TOOL ROOM ENVIRONMENT.HIGH SPEED MACHINING TESTS ON 4 DIFFERENT ARTILLERY SHELL STEELS ARE UNDERWAY. TESTS WERE INTERUPTED DUE TO CONTRACTOR'S COMMERCIAL ACTIVITITE	297.0	110.6	63.1	AUG 81	SEP 81
5 78 6748	SCAMP POLLUTION ABATEMENT INITIAL DEBUGGING PROBLEMS WERE RECTIFIED. SAMPLE RESULTS WERE RECEIVED AND EVALUATED. THESE RESULTS SHOWED BETTER THAN EXPECTED WASTE SEPARATION. THE EQUIPMENT WAS ACCEPTED IN NOV 80 AND THE FINAL REPORT IS EXPECTED DURING THE NEXT FISCAL QUARTER.	310.0	193.6	111.5	JAN 81	MAR 80

MANUFACTURING METHODS AND TECHNOLOGY PROGRAM
S U M M A R Y P R O J E C T S T A T U S R E P O R T
2ND SEMIANNUAL SUBMISSION CY 80 RCS DRCMT-301

PROJ NO.	TITLE + STATUS	AUTHORIZED ($000)	CONTRACT VALUES ($000)	EXPENDED LABOR AND MATERIAL ($000)	ORIGINAL PROJECTED COMPLETE DATE	PRESENT PROJECTED COMPLETE DATE
5 79 6746	SCAMP POLLUTION ABATEMENT SEE STATUS OF 5 78 6746.	77.0	50.1	24.4	AUG 80	FEB 81
5 78 6753	METHODS FOR ORIENTING AND FEEDING SMALL CAL AMMO A 75K COST GROWTH WAS APPROVED. THE PROCESS DEVELOPED BY GULF AND WESTERN WAS ACCEPTED AND AUTHORIZATION TO MANUFACTURE 1000 CARTRIDGE CASES WAS GIVEN. GULF AND WESTERN'S FINAL REPORT IS EXPECTED TO BE SUBMITTED BY 31 DEC 80.	475.0	366.0	93.0	MAR 79	DEC 80
5 79 6760	DRYING OF LOW DENSITY BALL PROPELLANT FLUID BED DRYING SYSTEM FABRICATION AND ACCEPTANCE TESTING COMPLETED. SYSTEM RECEIVED AND INSTALLATION COMPLETED. CALIBRATION EFFORTS COMPLETED DURING SEPT AND DRYING TESTS FOR DESIGN OF BATCH PRODUCTION SCALE DRYER COMPLETED IN DECEMBER, 1980	101.0	65.0	22.7	JAN 81	JUN 81
5 78 6774	MANUFACTURING METHODS FOR APDS PROJECTILE THE 4-CAVITY MOLDING MACHINE HAS BEEN COMPLETED AND INSTALLED AT FORD. THE TRIM STATION WAS COMPLETED AND IS ALSO INSTALLED. 512 PROJECTILES WERE ASSEMBLED AND TEST FIRED. PERFORMANCE WAS ACCEPTABLE.	300.0	249.0	51.0	NOV 79	JUN 81
5 79 6774	MANUFACTURING METHODS FOR APDS PROJECTILE THESE EFFORTS ARE APPROXIMATELY 90 PCT COMPLETE. THE FINAL DEMONSTRATIONS ARE SCHEDULED FOR DEC 80 OR JAN 81.	895.0	711.8	169.8	NOV 79	JUN 81

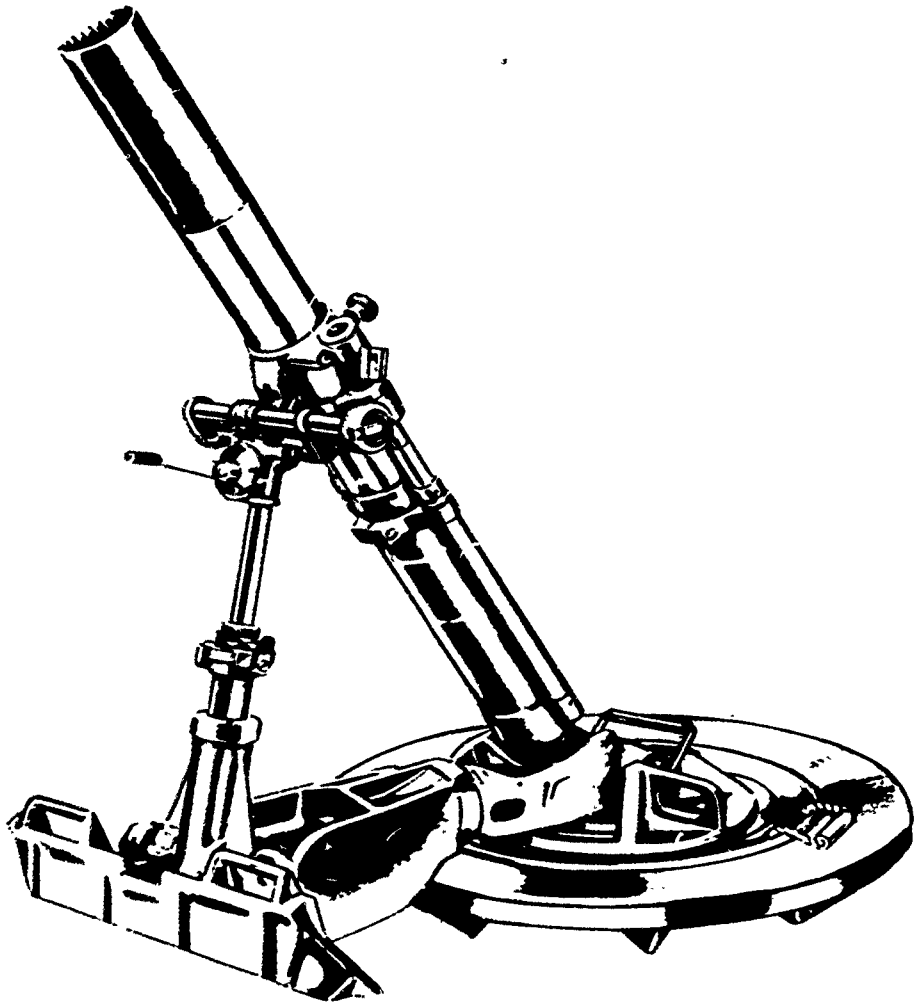

ARMAMENT R&D COMMAND

ARMAMENT MATERIEL READINESS COMMAND

(ARRADCOM, ARRCOM)

(WEAPONS)

A R R C O M - A R R A D C O M (WEAPONS)

CURRENT FUNDING STATUS, 2ND CY80

FISCAL YEAR	NO. OF PROJECTS	AUTHORIZED FUNDS ($)	CONTRACT FUNDING ALLOCATED ($)	CONTRACT FUNDING EXPENDED ($)		INHOUSE FUNDING REMAINING ($)	INHOUSE FUNDING EXPENDED ($)	
75	1	140,000	98,100	98,100	(100%)	41,900	40,500	(96%)
76	1	350,000	285,400	266,600	(93%)	64,600	45,500	(70%)
77T	0	0	0	0	(0%)	0	0	(0%)
77	7	2,470,300	1,558,800	709,200	(45%)	911,500	817,600	(89%)
78	7	1,392,000	608,900	409,600	(67%)	783,100	320,000	(40%)
79	17	2,758,000	772,400	260,500	(33%)	1,985,600	1,152,100	(58%)
80	31	5,852,200	777,300	35,000	(4%)	5,074,900	931,800	(18%)
81	0	0	0	0	(0%)	0	0	(0%)
82	0	0	0	0	(0%)	0	0	(0%)
TOTAL	64	12,962,500	4,100,900	1,779,000	(43%)	8,861,600	3,307,500	(37%)

AUTHORIZED FUNDING CONTRACT ALLOCATED 32% INHOUSE REMAINING 68%

MANUFACTURING METHODS AND TECHNOLOGY PROGRAM
S U M M A R Y P R O J E C T S T A T U S R E P O R T
2ND SEMIANNUAL SUBMISSION CY 80 RCS DRCMT-361

PROJ NO.	TITLE + STATUS	AUTHO-RIZED ($000)	CONTRACT VALUES ($000)	EXPENDED LABOR AND MATERIAL ($000)	ORIGINAL PROJECTED COMPLETE DATE	PRESENT PROJECTED COMPLETE DATE
6 80 3901	MANUFACTURE OF FLUIDIC AMPLIFIERS BY COLD FORMING (PHASE 2) DRAWINGS FOR THREE LAMINATES TO BE FINEBLANKED HAVE BEEN GENERATED, REVIEWED, AND ACCEPTED. FABRICATION OF THE TOOLING IS IN PROGRESS.	59.0	59.0		AUG 81	AUG 81
6 77 7201	ARTILLERY WEAPON FIRING TEST SIMULATOR THE SECOND SIMULATOR HAS BEEN INSTALLED. THE CONTRACTOR IS HAVING PROBLEMS WITH THE COMPUTER HARDWARE AND SOFTWARE. ALTHOUGH THE SYSTEM IS BEING USED ON A LIMITED BASIS, FINAL ACCEPTANCE WILL NOT BE MADE UNTIL THE CONTRACTOR REMEDIES ITS PROBLEMS.	820.0	689.7	110.9	OCT 78	SEP 81
6 79 7317	OPTIMIZATION OF STEP THREAD TOOLING SPECIAL CUTTER BLADE GRINDING FIXTURE FOR SHARPENING TOOLS IS BEING UTILIZED. LAST SET OF CUTTER BLADES HAS NOT BEEN TESTED DUE TO MACHINE DOWNTIME AND OPERATOR TRAINING.	75.0	5.2	33.4	NOV 80	JUN 81
6 79 7482	MODIFIED RIBBON RIFLING GENERATING MACHINE A PROPOSAL FOR A CNC MACHINE HAS BEEN RECEIVED AND IS BEING EVALUATED.	296.0		20.4	APR 81	DEC 83
6 75 7532	SINGLE POINT CUTTING FOR METAL + PLASTIC OPTICS ***** DELINQUENT STATUS REPORT *****	140.0	98.1	40.5	JUN 76	JUN 81
6 79 7555	DYNAMIC PRESSURIZATION STAND, SLIDE BLOCK BREECH MECH PROBLEMS WITH THE RELIABILITY OF THE SYSTEM HAVE DELAYED THE ACCEPTANCE. THE ACCEPTANCE IS SCHEDULED FOR JAN 1981. THE STUB TUBE WAS COMPLETED AND IS IN THE PROCESS OF BEING INSPECTED. THE BASE VALVE ASSY IS SCHEDULED TO BE COMPLETED IN JULY 1981.	121.0	50.9	18.4	SEP 81	FEB 81
6 76 7580	PILOT AUTO SHOP LOADING AND CONTROL SYSTEM- CAM SEVERAL SIMULATION TEST CYCLES WERE RUN ON THE MATERIAL REQUIREMENTS AND CAPACITY PLANNING MODULE. PROGRAMMING OF SOFTWARE FOR THE COST MONITORING AND CONTROL MODULE CONTINUES. TAG SYSTEM INSTALLED AND IMPROVED THE ACCURACY OF WORK-IN-PROCESS RECORDS	350.0	285.4	45.5	SEP 78	JUN 81
6 79 7605	CHEMICALLY BONDED SAND FOR CLOSE TOLERANCE CASTING THE CONTRACTUAL EFFORT TO DESIGN MOLD AND CORE MAKING SYSTEM HAS BEEN COMPLETED. CORE MAKING SYSTEM HAS BEEN RECEIVED AND WILL BE INSTALLED WHEN MATERIAL FOR UTILITIES HOOK UP ARE RECEIVED.	127.0	22.0	97.0	MAR 80	MAR 81
6 80 7605	CHEMICALLY BONDED SAND FOR CLOSE TOLERANCE CASTING PROJECT IS BEING DELAYED DUE TO DELAYS ENCOUNTERED IN PREVIOUS PROJECT.	174.0		39.7	FEB 82	FEB 82

MANUFACTURING METHODS AND TECHNOLOGY PROGRAM
S U M M A R Y P R O J E C T S T A T U S R E P O R T
2ND SEMIANNUAL SUBMISSION CY 80 RCS DRCMT-301

PROJ NO.	TITLE + STATUS	AUTHORIZED ($000)	CONTRACT VALUES ($000)	EXPENDED LABOR AND MATERIAL ($000)	ORIGINAL PROJECTED COMPLETE DATE	PRESENT PROJECTED COMPLETE DATE
6 77 7644	APPLICATION OF INTEGRAL COLOR ANODIZE FOR ALUMINUM LABORATORY EVALUATIONS HAVE BEEN COMPLETED. THE SUPERIORITY OF THE HARD COATING PROCESS WAS DEMONSTRATED. THIRTY M16A1 RECEIVERS, COATED WITH CHARCOAL GRAY ICA COATING, WERE PROVIDED TO THE INFANTRY BOARD FOR FIELD EVALUTION.	7[illegible]		73.0	APR 78	JAN 81
6 78 7710	INJECTION MOLDING OF RUBBER OBTURATOR PADS MOLD MODIFICATIONS WERE MADE, AND RESOLVED PROBLEMS OF UNEVEN CURVING. MOLD CONDITIONS WERE ESTABLISHED. MATERIAL PROPERTIES MET PHYSICAL REQUIREMENTS. A SIMULATED PRODUCTION RUN WAS COMPLETED, AND SUCCESSFULLY DEMONSTRATED REPRODUCIBILITY.	77.0		41.6	JUL 79	MAR 81
6 77 7714	MULTI-MODE WEAPON + MOUNT IMPEDANCE SIMULATOR (CAM) THIS PROJECT WILL RESULT IN TEST EQUIP TO SUPPORT ALL SMALL AND MED CAL WEAPONS AND AMMUNITION. THE TEST EQUIP (SIMULATOR) HAS BEEN COMPLETELY ASSEMBLED AND IS UNDERGOING TUNING OF THE MAIN SERVO VALVE.	335.0	245.0	84.4	OCT 79	JUL 81
6 79 7724	GROUP TECHNOLOGY OF WEAPON SYSTEMS USING MICLASS, A TOTAL OF 474 ROTATIONAL PARTS HAVE BEEN CODED. THE FEASIBILITY OF ESTABLISHING A MFG CELL WAS NOT VERIFIED. FUTURE WORK WILL BE DIRECTED TOWARDS AUTOMATED PROCESS PLANNING.	83.0	35.0	38.4	FEB 80	JUN 81
6 79 7726	APPLICATION OF COLD AND WARM ROTARY FORGING AN ELECTRONIC MALFUNCTION PREVENTED COLD FORGING TRIALS. TRIALS ARE NOW SCHEDULED FOR 2ND QUARTER FY81. BATTELLE HAS SUBMITTED A PROPOSAL FOR A COMPUTER PROGRAM TO SIMULATE THE INTEGRATED FORGING LINE. THIS PROPOSAL IS BEING EXPLORED.	106.0	69.9	11.7	SEP 80	SEP 81
6 79 7727	RECYCLING OF SCRAP GUN TUBES BY ROTARY FORGING FORGING TRIALS ARE COMPLETE. INSPECTION AND MECHANICAL TESTING IS COMPLETE FOR NINE OF THE TEN BARRELS FORGED. A 155MM185 TUBE HAS BEEN SELECTED FOR TESTING UNDER THE FIRST ARTICLE ACCEPTANCE CRITERIA.	237.0	7.6	184.9	JUL 81	JUN 81
6 79 7730	MANUFACTURE OF SPLIT RING BREECH SEALS ENG STUDY CONT. EDM TRIED UNSUCCESSFULLY WITH COPPER WIRE. WORK CONT ON HYDRAULICALLY OPERATED KINKING MACH. ADDITIONAL MODIFICATIONS WERE DECIDED UPON.	137.0		44.0	JUN 80	JUN 81
6 80 7730	MANUFACTURE OF SPLIT RING BREECH SEALS LIMITED SUCCESS WITH POWER OPERATED KINKING UNIT. MODIFICATIONS ARE BEING CARRIED OUT.	363.0		8.6	DEC 82	DEC 82
6 77 7744	IMPROVED MFG PARAMETERS FOR OPTICS ***** DELINQUENT STATUS REPORT *****	165.0		154.9	APR 78	JUN 81

MANUFACTURING METHODS AND TECHNOLOGY PROGRAM
S U M M A R Y P R O J E C T S T A T U S R E P O R T
2ND SEMIANNUAL SUBMISSION CY 80 RCS DRCMT-301

PROJ NO.	TITLE + STATUS	AUTHO-RIZED ($000)	CONTRACT VALUES ($000)	EXPENDED LABOR AND MATERIAL ($000)	ORIGINAL PROJECTED COMPLETE DATE	PRESENT PROJECTED COMPLETE DATE
6 77 7745	DIAMOND TOOL FABRICATION CAPABILITY DARCOM APPROVED JUSTIFICATION FOR CONTINUATION OF THIS PROJECT AND WORK HAS RE-COMMENCED UNDER A CONTRACT WITH ITEK OPTICAL SYSTEMS DIVISION TO DEVELOP RESHAPING AND/OR REFORMING TECHNIQUES FOR DIAMOND PELLETS.	112.0	50.0	61.3	MAR 78	DEC 81
6 77 7755	NOISE SUPPRESSOR FOR POWDER TYPE RECOIL MECHANISM TESTING MA A CONTRACT HAS BEEN NEGOTIATED. THE EQUIPMENT DESIGN IS BEING REVIEWED. DUE TO CIRCUMSTANCES BEYOND CONTROL THIS PROJECT HAS SLIPPED. HOWEVER, THE PROJECT IS BEING PROPERLY MANAGED AND SUCCESS IS CONTINGENT UPON TECHNICAL FEASIBILITY.	385.0	326.2	5.0	FEB 80	MAY 81
6 79 7802	ESTABLISH MACHINE TOOL PERFORMANCE SPECIFICATIONS AN OVERALL PROCUREMENT METHODOLOGY WAS ESTABLISHED. DEVELOPMENT OF NEW MACHINE TOOL TESTING AND VALIDATION PROCEDURES CONTINUED. CONTRACTOR PERSONNEL VISITED RIA TO INSPECT EXISTING EQUIPMENT AND PROCEDURES AND DISCUSS MACHINE TOOL DESIGN AND CONTROL	282.0	259.3	22.7	JUN 81	OCT 81
6 78 7807	PROGRAMMED OPTICAL SURFACING EQUIPMENT AND METHODOLOGY (CAM) A CONTRACT WAS AWARDED TO THE UNIVERSITY OF ROCHESTER FOR A CNC OPTICAL SURFACING CENTER. EITHER A CNC-MOOG 3000 OR A BOSTOMATIC 300 CNC PRECISION MACHINING CENTER WILL BE BOUGHT. SEE MMT PROJECT 6 79 7807.	134.0	106.0	27.2	DEC 79	MAY 82
6 79 7807	PROGRAMMED OPTICAL SURFACING EQUIPMENT AND METHODOLOGY (CAM) SEE MMT PROJECT 6 78 7807. THE CONTRACTOR IS EVALUATING DATA FROM THE HARDWARE VENDORS. AFTER FINAL EVALUATION A CNC MACHINING CENTER WILL BE BOUGHT AND ADAPTED FOR OPTICS FABRICATION.	138.0	119.0	13.8	NOV 80	MAY 82
6 78 7808	LEAK DETECTION TECHNIQUES FOR SMALL SEALED FIRE CON ASSM ADDITIONAL FUNDING TO COMPLETE FABRICATION OF THE TEST FIXTURE AND VALIDATE THE NEW PROCESS WAS APPROVED BY DARCOM. THE PROJECT WORK WILL COMMENCE IN DEC 80.	133.2		78.2	APR 79	DEC 81
6 78 7840	PORTABLE MULTI-DEGREE-OF-FREEDOM SIMULATOR UTILIZING THE KNOWLEDGE GAINED FROM MMT PROJECT 6 77 7513 THIS PROJECT WILL PROVIDE A PORTABLE SIMULATOR. CONTRACT NEGOTIATIONS ARE UNDERWAY.	389.0		52.0	JUN 80	APR 83
6 80 7920	CONSERVATION OF CRITICAL MATERIALS FOR GUN TUBES A CONTRACT HAS BEEN AWARDED TO CANNON-MUSKEGON CORP. FOR PRODUCING SIX HEATS WITH VARYING CHEMISTRIES. ALTECH SPECIALTY PLANT WILL FORGE THE HEATS. A SPECIFICATION FOR PROCURING FULL SIZED PREFORMS IS ALMOST COMPLETE.	236.0	20.2	7.5	SEP 81	DEC 81

MANUFACTURING METHODS AND TECHNOLOGY PROGRAM
S U M M A R Y P R O J E C T S T A T U S R E P O R T
2ND SEMIANNUAL SUBMISSION CY 80 RCS DRCMT-3[illegible]

PROJ NO.	TITLE + STATUS	AUTHORIZED ($000)	CONTRACT VALUES ($000)	EXPENDED LABOR AND MATERIAL ($000)	ORIGINAL PROJECTED COMPLETE DATE	PRESENT PROJECTED COMPLETE DATE
6 80 7925	BORE EVACUATOR BORING ENG AND FEASIBILITY STUDIES HAVE BEEN COMPLETED. A DECISION WAS MADE TO PURSUE SIMULTANEOUS MACHINING OF BOTH ENDS OF THE EVACUATOR ASSEMBLY AND EQUIP IS BEING OBTAINED.	111.0		9.0	MAR 82	MAR 82
6 80 7926	HOT ISOSTATIC PRESSING OF LARGE ORDNANCE COMPONENTS QUOTES HAVE BEEN OBTAINED FROM CAPABLE HIP VENDORS TO PRODUCE TEST BILLETS. WATERVLIET ARSENAL IS NEGOTIATING CONTRACTS.	216.0		10.1	JAN 82	SEP 82
6 80 7927	GENERATION OF BASE MACHINING SURFACES A DETAILED ENGINEERING ANALYSIS WAS PERFORMED THAT LED TO THE SELECTION OF AN ENGINEERING DESIGN FOR THE AUTOMATED SYSTEM. WORK HAS COMMENCED ON A PROCUREMENT SPECIFICATION FOR THE SYSTEM.	86.0		13.6	MAR 81	JUN 81
6 80 7928	ROBOTIZED BENCHING OPERATIONS FEASIBILITY STUDY HAS BEEN INITIATED. A SAMPLE COMPONENT WAS SENT TO A MANUFACTURER OF ROBOTS FOR TRIAL TESTS. IT SEEMS THAT THREE ROBOT MANUFACTURERS AT MOST (PRAB, THERMWOOD AND ASEA INC) HAVE THE CAPABILITY TO SUPPLY A ROBOT TO SOLVE THE PROBLEM.	113.0		8.2	AUG 81	AUG 81
6 77 7942	ANALYSIS FOR MODERNIZATION OF INDUSTRIAL OPERATIONS EFFORTS CONTINUED ON THE PLANNING FOR ROCKISLAN ARSENAL MODERNIZATION. CONTRACT WAS AWARDED TO CASE & CO FOR MACHINE TOOL REPLACEMENT ANALYSIS. STUDIES WERE COMPLETED FOR ENVIRONMENTAL ASSESSMENT, ADDITIONAL ELECTRICAL POWER AND UPDATES TO MASTER PLAN	576.3	247.9	328.1	FEB 78	SEP 81
6 78 7943	ANALYSIS FOR MODERNIZATION OF INDUSTRIAL OPERATIONS PLANNING AIDS FOR NEW FACILITY LAYOUTS WERE PROCURED FOR THE ROCK ISLAND ARSENAL MODERNIZATION MASTER PLAN.	441.8	410.7	28.0	JUN 79	MAR 81
6 80 7948	ESTABLISH CUTTING FLUID CONTROL SYSTEM MATERIALS WERE ORDERED FOR TURNING TESTS. ADDITIONAL FLUIDS WERE REQUESTED AND TESTS WERE INITIATED FOR TURNING, BORING, MILLING, DRILLING AND GRINDING.	156.0	122.0	2.8	SEP 81	SEP 81
6 79 7949	APPLICATION OF GROUP TECHNOLOGY TO RIA MFR (CAM) MICLASS ALONG WITH SUPPORTING APPLICATION PROGRAMS HAVE BEEN INSTALLED. THIS GIVES RIA A COMPLETE OPERATIONAL CLASS, AND CODING AND GT SYSTEM. TO DATE A TOTAL OF 5800 PARTS HAVE BEEN CODED. AN ADDITIONAL 500 PARTS ARE CURRENTLY BEING CODED.	127.0	91.5	31.5	FEB 80	FEB 81
6 80 7949	APPLICATION OF GROUP TECHNOLOGY TO RIA MFG (CAM) DEVELOPMENT OF PLANT LAYOUT SOFTWARE AND GROUP SCHEDULING SOFTWARE IS CONTINUING. A DATA BASE FOR AN AUTOMATED PROCESS PLANNING SYSTEM IS BEING ESTABLISHED. WORK ON IDENTIFYING A PROTOTYPE GE MACHINING CELL IS UNDERWAY.	155.0		31.2	MAY 82	MAY 82

MANUFACTURING METHODS AND TECHNOLOGY PROGRAM
S U M M A R Y P R O J E C T S T A T U S R E P O R T
2ND SEMIANNUAL SUBMISSION CY 80 RCS DRCMT-301

PROJ NO.	TITLE + STATUS	AUTHO-RIZED ($000)	CONTRACT VALUES ($000)	EXPENDED LABOR AND MATERIAL ($000)	ORIGINAL PROJECTED COMPLETE DATE	PRESENT PROJECTED COMPLETE DATE
6 79 7963	GROUP TECH CELLULAR MFG FOR FC COMPONENTS ASSEMBLIES A CONTRACT TO ESTABLISH A PILOT COMPUTERIZED DESIGN/MANUFACTURING SYSTEM BASED ON GROUP TECHNOLOGY WAS AWARDED. A NEW MATERIAL CODING SCHEME HAS BEEN DEVELOPED. COMPONENT PARTS ARE BEING CODED. MICLASS TRAINING IS BEING CONDUCTED.	188.0	75.0	48.2	JUL 80	JUL 81
6 80 7963	GROUP TECHNOLOGY FOR FIRE CONTROL PARTS AND ASSEMBLIES SEE MMT PROJECT 6 79 7963. CRITERIA FOR APPLICATION OF GT FOR SUB-ASSEMBLIES IS BEING GENERATED ALONG WITH CODING STRUCTURE CHANGES TO MICLASS FOR HANDLING SUB-ASSEMBLIES. REQUIREMENTS FOR A COMPUTER GRAPHICS CAPABILITY ARE BEING ESTABLISHED.	303.0	100.0	17.4	DEC 81	FEB 82
6 80 7985	SMALL ARMS WEAPONS NEW PROCESSES PRODUCTION TECHNOLOGY BARRELS RECEIVED FROM FGM, STEYR, AUSTRIA ARE KINKED. A CHAMBER REBORE WILL CORRECT THIS.	349.5	250.4	87.2	MAY 81	APR 82
6 79 7990	IMPROVED FABRICATION AND REPAIR OF ANODES THE POLARAGRAPH HAS BEEN RECEIVED. WHEN COUPLED WITH THE MICRO-PROCESSOR IT WILL PROVIDE CONTROL AND CONNECTIONS OF THE PLATING SOLUTION. INSTALLATION DRAWINGS ARE 90% COMPLETE.	250.0		141.5	JUN 81	SEP 81
6 80 8004	CO-DEPOSITION OF SOLID LUBRICANTS DURING ANODIZING VARIOUS ALUMINUM ALLOY WEAPON COMPONENTS ARE BEING PROCURED. A SANFORD HARDCOAT PROCESSOR CAPABLE OF COATING ACTUAL WEAPON COMPONENTS HAS BEEN INSTALLED.	121.0		99.5	JAN 81	DEC 81
6 79 8005	ESTABLISHMENT OF THE SPACE MECHANICAL PLATING PROCESS EVALUATION OF CADMIUM PARTS AND ZINC PARTS PLATED BY THE MECHANICAL AND ELECTROPLATING PROCESSES IS BEING CONDUCTED. AN ASSESSMENT OF FINISHES ON SINTERED PARTS WILL ALSO BE MADE.	150.0		147.5	DEC 79	FEB 81
6 79 8010	PRODUCTION OF ACOUSTIC MICROWAVE FILTERS HIGH RESOLUTION E-BEAM SUBSYSTEM HAS BEEN INSTALLED AND PUT IN OPERATION, AND PERFORMANCE EVALUATION IS IN PROGRESS. A PROCEDURE OF APPLICATION, EXPOSURE, AND DEVELOPMENT OF ELECTRON RESIST POLYMETHYL METHACRYLATE IS BEING ESTABLISHED.	233.0		227.0	JUN 80	SEP 81
6 80 8010	PRODUCTION OF ACOUSTIC MICROWAVE FILTERS (CAM) THE FLYING SPOT SCANNER HAS BEEN CHECKED OUT WITH A TEST PATTERN. THE PILOT LINE EQUIPMENT IS INTEGRATED AND OPERATIONAL AS A TEMPORARY INSTALLATION.	150.0		133.0	NOV 80	MAR 82
6 80 8017	POLLUTION ABATEMENT PROGRAM BIDS ARE BEING SOLICITED FOR PROCUREMENT OF EQUIPMENT FOR RECYCLING OILS AND COOLANTS. EFFORTS WERE INITIATED IN THE RECLAMATION OF USED SOLVENTS BY DETERMINING CURRENT PROCEDURES FOR HANDLING SOLVENTS AND OPTIONS AVAILABLE TO ALLEVIATING THIS PROB.	171.0		37.3	JAN 81	NOV 81

MANUFACTURING METHODS AND TECHNOLOGY PROGRAM
S U M M A R Y P R O J E C T S T A T U S R E P O R T
2ND SEMIANNUAL SUBMISSION CY 80 RCS DRCMT-301

PROJ NO.	TITLE + STATUS	AUTHO-RIZED ($000)	CONTRACT VALUES ($000)	EXPENDED LABOR AND MATERIAL ($000)	ORIGINAL PROJECTED COMPLETE DATE	PRESENT PROJECTED COMPLETE DATE
6 80 8024	HIGH SPEED ABRASIVE BELT GRINDING THE SPECIFICATION WAS COMPLETED AND A TWO-STEP FORMALLY ADVERTISED PROCUREMENT PROCESS IS UNDERWAY. ONE POTENTIAL CONTRACTOR HAS REQUESTED SOME CLARIFYING INFORMATION.	324.0		14.8	SEP 82	DEC 82
6 79 8025	ELECTRONIC PROFILE READOUT GAGE FOR POWDER CHAMBER CONTROLS THREE TECHNICAL PROPOSALS WERE SUBMITTED AND ARE BEING EVALUATED. WHEN THE EVALUATION IS COMPLETE, PRICES WILL BE SOLICITED FROM COMPANIES HAVING ACCEPTABLE PROPOSALS. A CONTRACT FOR THE ELECTRONIC GAGING SYSTEM SHOULD BE AWARDED IN THE NEAR FUTURE.	106.0	37.0	41.3	JUL 80	DEC 81
6 80 8035	COATING TUBE SUPPORT SLEEVES WITH BEARING MATERIALS STEEL TEST PLATES WERE CLAD WITH AL-BRONZE USING THE GAS METAL ARC WELDING PROCESS. WEAR AND FRICTION TESTS SHOWED IMPROVED WEAR RESISTANCE. TENSILE AND SHEAR TESTS REVEALED SIGNIFICANTLY IMPROVED BOND STRENGTH OF THE INTERFACE.	180.0		73.1	MAR 81	MAR 81
6 80 8036	WEAPON AIMING SYSTEM FOR THE 6-DOF SIMULATOR THE RFP FOR A CAMERA FOR VIWEING THE WEAPON SYSTEM TARGET AREA HAS BEEN FINALIZED. THE DESIGN FOR THE ELECTRONICS INTERFACE HAS BEEN COMPLETED. ALSO, A CONTROL HANDLE SUITABLE FOR SUPPLYING INPUT TO THE 6-DOF SIMULATOR HAS BEEN ACQUIRED.	126.0		25.0	SEP 81	APR 82
6 80 8047	PASS THRU STEADY RESTS FOR TUBE TURNING DESIGN OF MECH DEVICES REQD FOR SUPPORT OF SECONDARY HARDWARE SYSTEMS IS COMPLETE. A PWD IS BEING PROCESSED FOR CONDITIONING OF DIPEC RESERVED LATHE WHICH WILL BE USED ON THIS PROJECT.	269.0		20.4	JUL 83	JUL 83
6 78 8048	IMPRVD INSPECTION TECH F/INGOTS + PREFORMS F/ROTARY FORGING THE RFP WAS ISSUED. A BIDDERS CONFERENCE WAS HELD TO DISCUSS THE VARIOUS TECHNICAL ASPECTS OF THE RFP. THE RFP RESPONSES WERE SCHEDULED TO BE SUBMITTED 1 DECEMBER 1980.	113.0	41.2	65.8	SEP 80	DEC 81
6 78 8049	MANUFACTURING PROCESSES ENERGY CONSERVATION PROGRAM AN ENERGY AUDIT OF ABOUT 75% OF THE MACHINERY ENGAGED IN THE MANUFACTURING PROCESSES HAS BEEN PERFORMED AND THE ELECTRICAL POWER CONSUMPTION DATA SUPPLIED TO THE OPERATIONS DIRECTORATE SO REPLACEMENTS CAN BE MADE WITH MORE EFFICIENT EQUIPMENT.	104.0	51.0	27.2	DEC 79	JUN 81
6 80 8051	APPLICATION AND CONTROL OF MACHINE TOOLS (CAM) SOW HAS BEEN SUBMITTED TO PROCUREMENT. IN-HOUSE WORK TO DEFINE PRODUCTION MACHINE REQUIREMENTS AND TO DEVELOP COMPETITIVE PERFORMANCE ANALYSES CONTINUED. RECORDS ON MACH TOOL MAINT ARE BEING SOLICITED FROM MACHINE TOOL BUILDERS.	100.0		9.6	AUG 81	OCT 81

MANUFACTURING METHODS AND TECHNOLOGY PROGRAM
S U M M A R Y P R O J E C T S T A T U S R E P O R T
2ND SEMIANNUAL SUBMISSION CY 80 RCS DRCMT-301

PROJ NO.	TITLE + STATUS	AUTHO-RIZED ($000)	CONTRACT VALUES ($000)	EXPENDED LABOR AND MATERIAL ($000)	ORIGINAL PROJECTED COMPLETE DATE	PRESENT PROJECTED COMPLETE DATE
6 80 8054	OPTICAL SCRATCH AND DIG STANDARDS FOR FIRE CONTROL SYSTEMS CONTRACT NOT YET AWARDED. PROJECT WILL IMPROVE PROCESSES USED TO FORM OPTICAL SCRATCH & DIG STANDARDS. LASER SCRIBING WILL BE USED TO MAKE LINES IN THE METAL DIE USED TO MOLD THE SCRATCH STANDARD. PLASMA ETCHING WILL BE USED TO FORM DIG STANDARDS.	165.0		22.0	AUG 84	AUG 84
6 80 8057	DUAL RIFLING BROACH REMOVAL SY EM DESIGN OF BROACH REMOVAL SYSTEM IS NEARLY COMPLETE. DESIGN OF RIFLING HEADS HAS BEEN COMPLETED AND FORWARDED TO TOOLS BRANCH. PROCUREMENT ACTION IS BEING INITIATED ON COMMERCIAL ITEMS WHICH WILL BE INCLUDED IN DESIGN OF THE SYSTEM.	215.0		40.5	SEP 82	DEC 82
6 80 8059	SALVAGE OF CANNON COMPONENTS BY ELECTRODEPOSITION DRAWINGS AND REJECTION REPORTS OF CANDIDATE COMPONENTS HAVE BEEN OBTAINED AND THE REQUIREMENTS OF A SALVAGE COATING HAVE BEEN DETERMINED. COMPONENTS HAVE BEEN REQUESTED FROM OPERATIONS.	152.0		51.6	JUN 81	JUN 81
6 80 8060	IMPROVED MFG PROCESSES FOR FINAL INSPECTION OF CANNON TUBES SPECIFICATIONS HAVE BEEN REWRITTEN USING NEW FORMATS. THESE SPECIFICIATIONS ARE IN THE PROCESS OF BEING REVIEWED.	268.0	215.7	7.7	DEC 81	AUG 82
6 80 8062	RAPID INTERNAL THREADING AN INDUSTRIAL SURVEY TO DETERMINE EQUIPMENT AVAILABILITY IS ONGOING.	69.0		9.1	DEC 81	DEC 81
6 79 8104	IMPROVED BREACH BLOCK MANUFACTURING A DECISION WAS MADE TO INITIATE ACTION TO PURCHASE A FLEXIBLE MANUFACTURING SYSTEM WITH FY81 REARM FUNDS. A PRESOLICITATION CONFERENCE WAS HELD ON 23 SEPT 80. A SPECIFICATION PACKAGE TO SOLICIT CONCEPT PROPOSALS IS BEING PREPARED.	100.0		30.4	JAN 81	JUN 81
6 80 8105	ESTABLISH ROUGH THREAD BLANKS, 8-INCH M201 BUSHING AN ENGINEERING STUDY CONCLUDED THAT A COMBINATION OF MILLING AND MULTIPLE SLOTTING WOULD HAVE THE MOST IMPACT ON REDUCING MACHINING TIME. IT WAS CONCLUDED THAT THE REQUIRED MACHINERY IS AVAILABLE AND FIXTURING DESIGN HAS BEGUN.	88.0		20.4	SEP 81	DEC 81
6 80 8106	LARGE CALIBER POWDER CHAMBER BORING A PERFORMANCE-TYPE PURCHASE SPEC HAS BEEN COMPLETED FOR A CNC PRECISION POSITIONING SYSTEM. FINAL BORING BAR SYSTEM DRAWINGS ARE NEARING COMPLETION. PROCUREMENT ACTION HAS BEEN INITIATED TO PURCHASE A VARIETY OF BORING TOOL CARTRIDGES + CARBIDE INSER	59.0		37.8	NOV 81	DEC 81
6 80 8107	CREEP FEED CRUSH FORM GRINDING FIXTURING DESIGN FOR RETENTION OF 105MM M68 BREECH RING WAS COMPLETED. ENG SPECS FOR ALL MAJOR CAPITAL EQUIP TO CONSTRUCT 100 HP CREEP FEED CRUSH FORM PROFILE GRINDING SYSTEM HAS BEEN COMPLETED. FORMAL PROCUREMENT PROCEDURES WERE STARTED.	576.7		12.4	MAY 83	JUN 83

MANUFACTURING METHODS AND TECHNOLOGY PROGRAM
S U M M A R Y P R O J E C T S T A T U S R E P O R T
2ND SEMIANNUAL SUBMISSION CY 80 RCS DRCMT-301

PROJ NO.	TITLE • STATUS	AUTHO-RIZED ($000)	CONTRACT VALUES ($000)	EXPENDED LABOR AND MATERIAL ($000)	ORIGINAL PROJECTED COMPLETE DATE	PRESENT PROJECTED COMPLETE DATE
6 80 8206	MATERIAL HANDLING CONTRACT FOR CONSULTING SERVICES SIGNED BY PROCUREMENT ON 20 OCT 1980.	18.0	10.0	7.2	SEP 82	SEP 81
6 80 8209	PILOT PRODUCTION OF GRADIENT INDEX OPTICS A SCOPE OF WORK AND PROCUREMENT PACKAGE WERE PREPARED. A CONTRACT WILL BE NEGOTIATED WITH UNIV. OF ROCHESTER TO SCALE UP ION DIFFUSION TECHNIQUES FOR AXIAL GRADIENT INDEX LENS BLANKS. THEY WILL BE GROUND & POLISHED INTO LENSES AND PROVEN IN A SIGHT.	213.0		63.0	DEC 83	DEC 83
6 80 8342	KEYWAY MILLING MACHINE DESIGN HAS BEEN FINALIZED ON THE PURCHASE OF A 3-SPINDLE HORIZ ARBOR SUPPORTED COLUMN TRAVELING MILLING MACH. THE MACH WILL BE CAPABLE OF INDEPENDENT AND SIMULTANEOUS CUTTING BY ALL THREE MILLING HEADS.	242.0		12.1	JAN 82	DEC 83

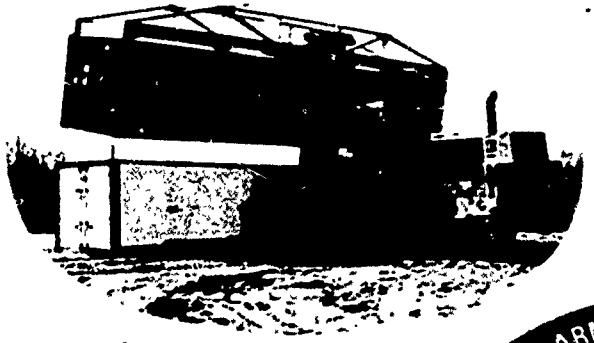

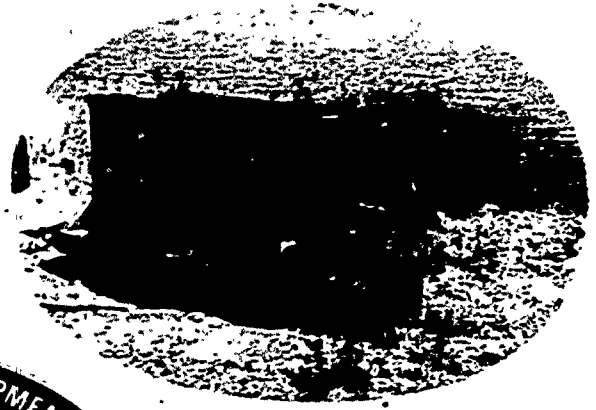

U S ARMY MOBILITY EQUIPMENT

MERADCOM

RESEARCH & DEVELOPMENT COMMAND

Fort Belvoir, Va.

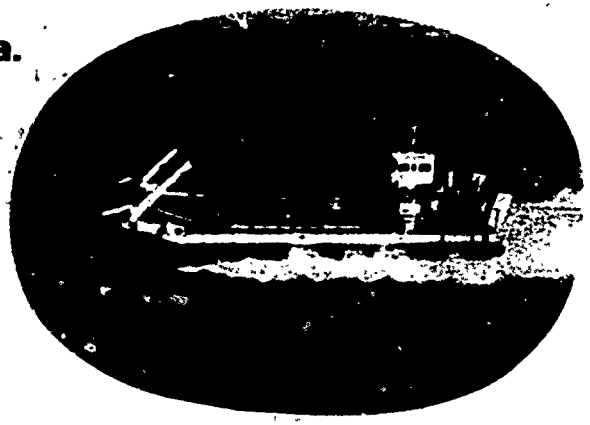

MOBILITY EQUIPMENT RESEARCH AND DEVELOPMENT COMMAND

CURRENT FUNDING STATUS, 2ND CY80

FISCAL YEAR	NO. OF PROJECTS	AUTHORIZED FUNDS ($)	CONTRACT FUNDING ALLOCATED ($)	CONTRACT FUNDING EXPENDED ($)		INHOUSE FUNDING REMAINING ($)	INHOUSE FUNDING EXPENDED ($)	
77	1	750,000	742,200	709,200	(95%)	7,800	0	(0%)
78	1	350,000	295,000	196,000	(66%)	55,000	55,000	(100%)
79	5	1,740,000	1,579,000	489,500	(31%)	161,000	87,100	(54%)
80	5	1,051,000	613,700	434,800	(70%)	437,300	64,900	(14%)
81	3	229,000	0	0	(0%)	229,000	0	(0%)
82	0	0	0	0	(0%)	0	0	(0%)
TOTAL	15	4,120,000	3,229,900	1,829,500	(56%)	890,100	207,000	(23%)

AUTHORIZED FUNDING CONTRACT ALLOCATED 78% INHOUSE REMAINING 21%

MANUFACTURING METHODS AND TECHNOLOGY PROGRAM
S U M M A R Y P R O J E C T S T A T U S R E P O R T
2ND SEMIANNUAL SUBMISSION CY 80 RCS DRCMT-301

PROJ NO.	TITLE + STATUS	AUTHO-RIZED ($000)	CONTRACT VALUES ($000)	EXPENDED LABOR AND MATERIAL ($000)	ORIGINAL PROJECTED COMPLETE DATE	PRESENT PROJECTED COMPLETE DATE
E 79 3532	MOLTEN SALT LI/CL BATTERY NEW FELT SEPARATORS DEVELOPED ARE LESS COSTLY AND GIVE IMPROVED PERFORMANCE. EPI IS NOW DESIGNING THE BATTERY INSULATION BOX. CELLS WITH FELT SEPARATORS HAVE BEEN OPERATED FOR OVER 1000 CYCLES. THERMAL CYCLING HAS HAD NO LASTING EFFECT ON CELLS.	295.0	280.0	1.6	AUG 80	APR 82
E 79 3592	IMPROVED GRAPHITE REINFORCEMENT-PHASE 3 PILOT PLANT FABRICATION IS NEARING COMPLETION. SEVERAL THOUSAND FEET OF BORON TREATED GRAPHITE FIBER IS BEING TESTED AS REINFORCEMENT IN METAL MATRIX COUPONS. A P-16 HAS BEEN PREPARED TO SUPPORT PHASE III OF THE EFFORT.	282.0	247.5	18.0	SEP 80	MAR 81
E 78 3604	SOLID STATE POWER SWTICH DELTA ELECTRONIC CORP. CONTINUES TO HAVE TECHNICAL PROBLEMS BUILDING THE INTEGRATED POWER SWITCH. THEY MAY HAVE SOLVED THEIR FINANCIAL AND GROWTH PROBLEMS, BUT ENGINEERING SAMPLES HAVE NOT BEEN DELIVERED. CONTRACT IS FIXED IN PRICE AND SHOULD NOT INC	350.0	295.0	55.0	JUN 80	SEP 81
E 79 3604	SOLID STATE POWER SWITCH DELTA ELECTRONICS WORKED ON ENGINEERING SAMPLES BUT RAN INTO TECHNICAL PROBLEMS. THEY ARE ASSEMBLING POWER TRANSISTOR CHIPS AND DRIVE CIRCUITRY ON A COMMON HEAT SINK THAT WILL BE SEALED IN A HERMETIC PACKAGE, CONTRACTOR IS BEHIND SCHEDULE.	85.0	54.0	26.0	JUN 81	SEP 81
E 80 3708	COATED FABRIC COLLAPSIBLE FUEL TANK PROGRAM - CIRCULAR SEAML PERFECTION OF THE COATING PROCESS IS CONTINUING UNDER THIS PROJECT. FUTURE EFFORTS WILL BE DIRECTED TO PRODUCTION OF THE FULL SIZE SEAMLESS FABRIC AND COATING THIS FABRIC ON PRODUCTION MACHINERY.	100.0	70.0	17.0	SEP 81	SEP 82
E 79 3709	CONTINUOUS LENGTH FUEL HOSE SEE E 80 3709 FOR WORK ACCOMPLISHED.	245.0	164.5	41.5	SEP 81	MAR 82
E 80 3709	CONTINUOUS LENGTH FUEL HOSE PHASE 1 WAS COMPLETED. THE ADVANCING MANDREL MANUFACTURING TECHNIQUE WAS SELECTED FROM THE FOUR CANDIDATE TECHNIQUES EVALUATED. PHASE 2 WORK WAS INITIATED.	179.0		15.7	SEP 83	MAR 82
E 80 3717	HIGH TEMPERATURE TURBINE NOZZLE FOR 10 KW POWER UNIT SUBCONTRACTS FOR CERAMIC PARTS HAVE BEEN AWARDED. PARTS WILL BE FABRICATED ON PRODUCTION TOOLING. ACCEPTANCE TESTS WILL BE ACCOMPLISHED TO DETERMINE QUALITY OF PARTS.	436.0	409.8	26.2	OCT 82	SEP 81
E 81 3717	HIGH TEMPERATURE TURBINE NOZZLE FOR 10KW PU THIS PROJECT IS PHASE III OF THE TOTAL EFFORT. THE FUNDING WAS RELEASED NEAR THE END OF THIS REPORTING PERIOD.	60.0			APR 82	APR 82

MANUFACTURING METHODS AND TECHNOLOGY PROGRAM
S U M M A R Y P R O J E C T S T A T U S R E P O R T
2ND SEMIANNUAL SUBMISSION CY 80 RCS DRCMT-301

PROJ NO.	TITLE + STATUS	AUTHO-RIZED ($000)	CONTRACT VALUES ($000)	EXPENDED LABOR AND MATERIAL ($000)	ORIGINAL PROJECTED COMPLETE DATE	PRESENT PROJECTED COMPLETE DATE
E 79 3743	COMPOSITE SPUN MATERIAL LAUNCHING BEAM FOR BRIDGES CONTRACT WAS LET. PRODUCTION LINE EQUIPMENT WAS INSTALLED, DIE MOLDS WERE FABRICATED, WINDING MACHINE WAS FABRICATED AND INSTALLED, AND RAW MATERIAL (T-300 GRAPHITE) WAS PROCURED. TRIAL RUNS OF INDIVIDUAL COMPONENTS HAVE BEEN RUN.	833.0	833.0		SEP 80	DEC 82
E 80 3747	LIGHTER, LACV-30, SKIRT AND FINGER COMPONENTS CONTRACT PACKAGE HAS BEEN PREPARED, APPROVED, AND IS AWAITING SOLICITATION.	191.0		6.0	NOV 80	FEB 82
E 81 3747	LACV-30, SKIRT + FINGER COMPONENTS INITIATION OF WORK AWAITING LETTING OF CONTRACT IN MMI E 80 3747.	60.0			FEB 83	FEB 83
E 77 3749	HYDRAULIC ROTOR ACTUATORS ON-VEHICLE TESTING WAS COMPLETED AND ACTUATORS ARE BEING PREPARED FOR SHIPMENT TO BIRD-JOHNSON COMPANY FOR LEAKAGE TEST AND WEAR ANALYSIS.	750.0	742.2		MAY 79	MAR 81
E 80 3749	HYDRAULIC ROTARY ACTUATORS CRITICAL COMPONENTS ARE BEING REDESIGNED. SEARCH FOR MANUFACTURING SUB-CONTRACTORS IS UNDERWAY.	145.0	133.9		DEC 81	APR 81
E 81 3759	KEVLAR CABLE REINF FOR MILITARY BRIDGES A CONTRACT PACKAGE HAS BEEN PREPARED. CONTRACT AWARD IS ANTICIPATED FOR 3Q81.	109.0			MAY 82	MAY 82

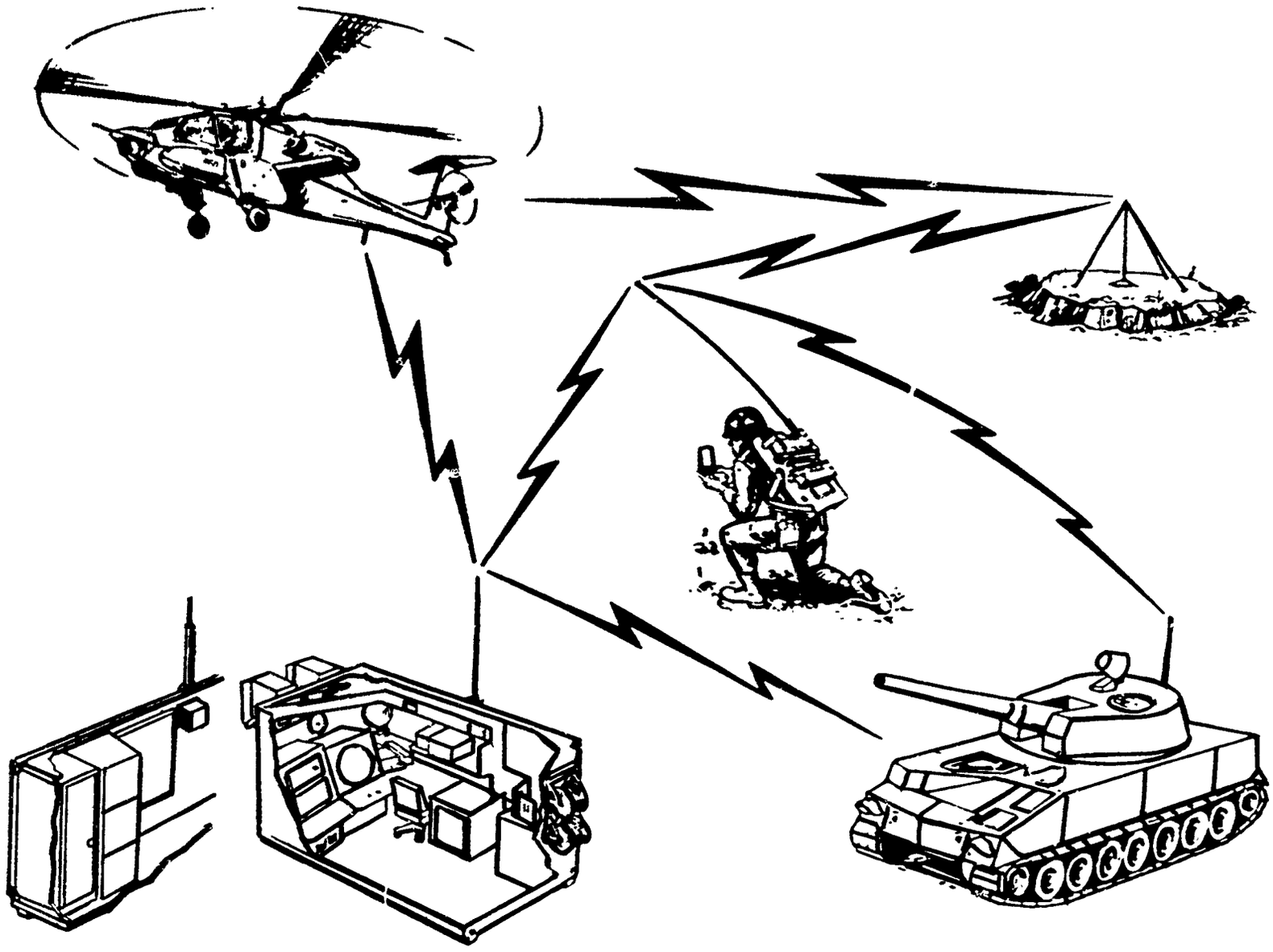

COMMUNICATIONS R&D COMMAND (CORADCOM)

COMMUNICATIONS R & D COMMAND

CURRENT FUNDING STATUS, 2ND CY80

FISCAL YEAR	NO. OF PROJECTS	AUTHORIZED FUNDS ($)	CONTRACT FUNDING ALLOCATED ($)	CONTRACT FUNDING EXPENDED ($)		INHOUSE FUNDING REMAINING ($)	INHOUSE FUNDING EXPENDED ($)	
76	1	437,800	392,800	358,800	(91%)	45,000	45,000	(100%)
77	0	0	0	0	(0%)	0	0	(0%)
77	0	0	0	0	(0%)	0	0	(0%)
78	1	316,500	292,500	0	(0%)	24,000	24,000	(100%)
79	2	1,508,700	1,440,800	733,900	(50%)	67,900	58,200	(85%)
80	2	825,000	0	0	(0%)	825,000	37,500	(4%)
81	2	1,097,000	0	0	(0%)	1,097,000	2,000	(0%)
82	0	0	0	0	(0%)	0	0	(0%)
TOTAL	8	4,185,000	2,126,100	1,092,700	(51%)	2,058,900	166,700	(8%)

AUTHORIZED FUNDING CONTRACT ALLOCATED 51% INHOUSE REMAINING 49%

MANUFACTURING METHODS AND TECHNOLOGY PROGRAM
S U M M A R Y P R O J E C T S T A T U S R E P O R T
2ND SEMIANNUAL SUBMISSION CY 80 RCS DRCMT-361

PROJ NO.	TITLE + STATUS	AUTHO-RIZED ($000)	CONTRACT VALUES ($000)	EXPENDED LABOR AND MATERIAL ($000)	ORIGINAL PROJECTED COMPLETE DATE	PRESENT PROJECTED COMPLETE DATE
F 80 3036	CAD/CAM OF SPECIAL ELECTRONIC CIRCUITS A STATEMENT OF WORK WAS WRITTEN AND SENT TO PROCUREMENT. A FIRM WILL DEVELOP A COMPUTERIZED METHOD FOR COSTING SINCGARS-S PRODUCTION COSTS.	20.0		13.5	AUG 81	DEC 81
F 81 3036	CAD/CAM OF SPECIAL ELECTRONIC CIRCUITS (CAM) A CONTRACTOR WILL IDENTIFY HIGH COST CIRCUITS AND COMPONENT IN THE SINCGARS-V (SINGLE CHANNEL) RADIO. SINCGARS CONTRACTORS CINCINNATI ELECTRONICS, ITT AEROSPACE, & ROCKWELL COLLINS WILL BE FURNISHED THE DATA.	320.0		2.0	DEC 81	DEC 81
F 80 3054	PRODUCTION METHODS FOR MULTI-LAYER FOLDED CIRCUITS CONTRACT BEING NEGOTIATED. PROJECTED AWARD FEB 81. HUGHES WILL ESTABLISH MATERIAL, PROCESS SPECS AND STANDARDS FOR MULTILAYER, MULTIFOLDING RIGID-FLEX CIRCUIT BOARDS. FABRICATION + TESTING WILL BE AUTOMATED. ETCHING + PLATING WILL BE OPTIMIZED.	805.0		24.0	SEP 82	MAY 82
F 81 3056	ELECTROLUMINESCENT NUMERIC MODULES CONTRACT NOT YET AWARDED. PROJECT WILL AUTOMATE MATERIAL DEPOSITION PROCESSES FOR ELECTROLUMINESCENT THIN FILM NUMERIC DISPLAY MODULES. NEW METHODS FOR CIRCUIT BONDING, CLEANING, HERMTIC SEALING + PACKAGING OF 10000 MODULES PER MONTH WILL BE DEVISED.	777.0			DEC 82	DEC 82
2 76 9778	LONG LIFE LIGHT EMITTER FOR FIBER OPTICS SEE INDIVIDUAL SUBTASKS. END OF CONTRACT DEMONSTRATION TO BE HELD AT LASER DIODE LABS ON 18 FEB 81 FOR BOTH CONTRACTS. DELIVERY OF 200 LASER DIODES IS SET FOR JAN 81, AND 250 LEDS FOR FEB 81.	437.8	392.8	45.0	AUG 78	MAR 81
2 76 9778 A	LONG LIFE LIGHT EMITTER FOR FIBER OPTICS LASER DIODE LABS SOLVED ITS PRODUCTION PROBLEMS ON SINGLE STRIPE INJECTION LASER DIODES FOR FIBER OPTICS COMMUNICATIONS. METHODS WERE DOCUMENTED. THE TRIPLE STRIP GEOMETRY CONSISTS OF 3 LASING ELEMENTS MOUNTED IN A HF PACKAGE WITH AN OPTICAL WINDOW.	216.4	143.9	22.5		MAR 81
2 76 9778 B	LONG LIFE LIGHT EMITTER FOR FIBER OPTICS LASER DIODE LABS FINALIZED METHODS FOR FORMING A PNP STRUCTURE IN A ZINC DIFFUSED WAFER TO MAKE A LIGHT EMITTING DIODE. A SCANNING ELECTRON MICROSCOPE WAS USED TO CHARACTERIZE THE JUNCTION. THE LED IS MOUNTED IN A FIBER OPTIC CABLE ASSEMBLY.	221.4	198.9	22.5		MAR 81
F 79 9835	INTEGRATED THIN FILM TRANSISTOR DISPLAY AEROJET RESOLVE SUBSTRATE VOLTAGE BREAKDOWN PROBLEMS FOR THIN FILM TRANSISTOR ADDRESSED ELECTRO LUMINESCENT DISPLAYS. THIN FILM PHOSPHOR AND BLACK LAYER IMPROVE CONTRAST IN SUNLIGHT. STACKS NOW OPERATE OK AT 500 VOLTS. SAMPLES WERE ACCEPTABLE.	998.7	943.8	13.5	AUG 81	AUG 81

MANUFACTURING METHODS AND TECHNOLOGY PROGRAM
S U M M A R Y P R O J E C T S T A T U S R E P O R T
2ND SEMIANNUAL SUBMISSION CY 80 RCS DRCMT-301

PROJ NO.	TITLE + STATUS	AUTHO-RIZED ($000)	CONTRACT VALUES ($000)	EXPENDED LABOR AND MATERIAL ($000)	ORIGINAL PROJECTED COMPLETE DATE	PRESENT PROJECTED COMPLETE DATE
2 78 9898	RUGGEDIZED TACTICAL FIBER OPTIC CABLES ITT ELECTRO-OPTICS ESTABLISHED FIBER OPTIC BUNDLING, CABLING AND POLYURETHANE JACKETING SUITABLE FOR MILITARY APPLICATION. CONFIRMATORY SAMPLE CABLES WERE FABRICATED & ARE UNDER TEST. PRODUCTION STATIONS ARE FULLY OPERATIONAL AT REQUIRED RATE.	316.5	292.5	24.0	NOV 79	DEC 81
F 79 9938	THREE COLOR LIGHT EMITTING DIODE DISPLAY UNIT A DIE ATTACH MACHINE WAS PURCHASED FROM FOTON AND HAS BEEN OPERATED AT RATES EXCEEDING THE REQUIRED 4000 DICE PER HOUR. A WIRE BONDER WAS ORDERED AND IS EXPECTED IN JAN 81. A DISPLAY MODULE EXERCISER WAS DESIGNED AND BUILT AND IS BEING CHECKED OUT.	510.0	497.0	44.7	SEP 81	MAR 82

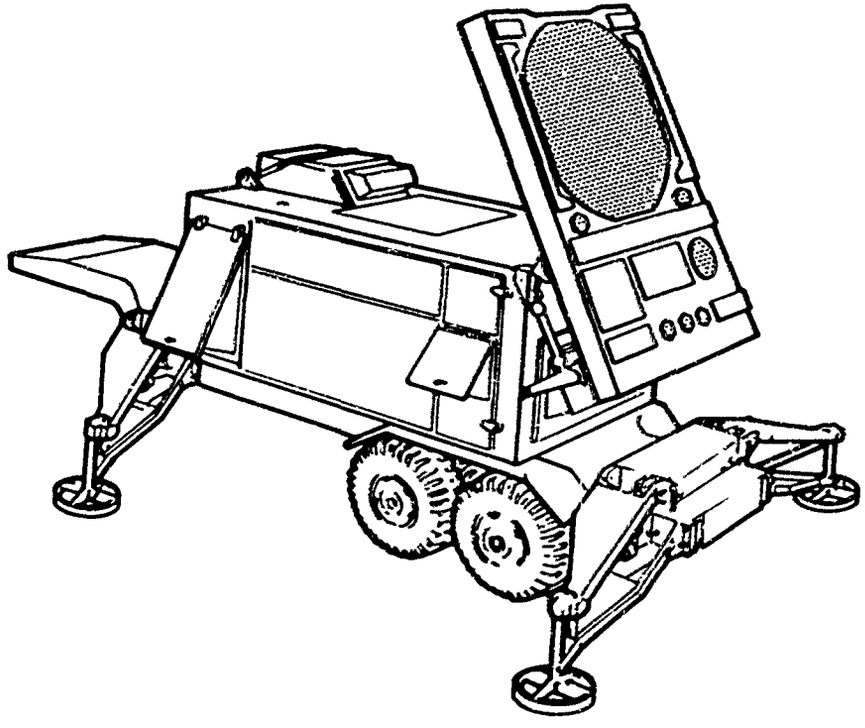

ELECTRONICS R&D COMMAND
(ERADCOM)

ELECYRONICS R & D COMMAND

CURRENT FUNDING STATUS, 2ND CYBD

FISCAL YEAR	NO. OF PROJECTS	AUTHORIZED FUNDS ($)	CONTRACT FUNDING ALLOCATED ($)	CONTRACT FUNDING EXPENDED ($)		INHOUSE FUNDING REMAINING ($)	INHOUSE FUNDING EXPENDED ($)	
76	2	431,700	375,400	329,300	(87%)	56,300	35,000	(62%)
7T	0	0	0	0	(0%)	0	0	(0%)
77	10	7,790,600	6,695,600	5,401,100	(80%)	1,095,000	587,800	(53%)
78	5	3,671,300	1,892,400	2,613,100	(136%)	1,778,900	294,300	(16%)
79	10	5,589,300	5,006,800	2,054,900	(41%)	582,500	375,300	(64%)
80	12	7,119,300	4,727,300	849,000	(17%)	2,392,000	307,500	(12%)
81	2	1,303,000	0	0	(0%)	1,303,000	27,000	(2%)
82	0	0	0	0	(0%)	0	0	(0%)
TOTAL	41	25,905,200	18,697,500	11,247,200	(60%)	7,207,700	1,626,900	(22%)

AUTHORIZED FUNDING CONTRACT ALLOCATED 72% INHOUSE REMAINING 27%

MANUFACTURING METHODS AND TECHNOLOGY PROGRAM
S U M M A R Y P R O J E C T S T A T U S R E P O R T
2ND SEMIANNUAL SUBMISSION CY 80 RCS DRCMT-301

PROJ NO.	TITLE + STATUS	AUTHO-RIZED ($000)	CONTRACT VALUES ($000)	EXPENDED LABOR AND MATERIAL ($000)	ORIGINAL PROJECTED COMPLETE DATE	PRESENT PROJECTED COMPLETE DATE
H 80 3010	MILLIMETER-WAVE SOURCES FOR 60, 94, AND 140 GHZ HUGHES WILL USE MICROPROCESSORS TO OPTIMIZE EPITAXIAL GROWTH PROCESS & AUTOMATE TESTING FOR 60, 94, & 140 GHZ SILICON IMPATT DIODES. IS USING A VERTICAL REACTOR FOR BETTER PROCESS CONTROL. A CONTRACT MOD WAS SUBMITTED TO ADD PILOT RUN ARC SAMPLES.	822.0	534.4	6.1	JUL 82	JUN 82
H 80 3012	INFRA-RED SOURCE FOR AN/ALQ-144 ILC IMPROVED MACHINING & COATING METHODS FOR NEW IR SOURCES FOR AN/ALQ-144. NEW LATHE & GUN DRIL. INSTALLED. CHEMICAL VAPOR DEPOSITION WAS USED TO APPLY BORON NITRIDE TO THE GRAPHITE HEATER. TEST STATIONS FOR HEATER CHECK-OUT & BURN-IN WERE BUILT.	350.0	264.2	15.5	JAN 81	DEC 81
H 80 3023	TUBULAR PLASMA PANEL A CONTRACT WAS AWARDED TO NORDEN SYSTEMS. ARTWORK FOR THE 256X512 PANEL. FROM THESE PATTERNS EXPOSURE MASTERS AND SUBMASTERS WERE MADE. ART WORK FOR THE 512X512 PANEL IS IN PROGRESS. FIXTURING FOR AUTO CLEANING, EXPOSURE AND SPUTTERING ARE COMPLETED.	800.0	674.0	8.0	APR 82	JUN 82
H 80 3026	HIGH PRESSURE OXIDE IC PROCESS ELECTRONIC TECHNOLOGY AND DEVICES LABS IS DEVELOPING A HIGH PRESSURE DRY OXIDATION CHAMBER WITH AUTOCLAVE ENGINEERS, INC. COMPONENTS OF THE EQUIPMENT WILL BE INSTALLED AT ETDL AS THEY BECOME AVAILABLE. WILL DEMONSTRATE THE EQUIPMENT TO INDUSTRY.	404.5	101.0	40.0	MAY 82	OCT 82
H 81 3031	10.6 UM CO-2 TEA LASERS NVL IS PREPARING A STATEMENT OF WORK TO DEFINE CONTRACTOR ACTIVITY IN PRODUCTION ENGINEERING A GAS LASER. WILL WORK ON ELECTRODE CONTOUR, MIRROR ALIGNMENT, CERAMIC HOUSING SEALING, AND CONTROL OF GAS MIXTURE FOR RANGEFINDER FOR XM1.	550.0		27.0	JAN 85	DEC 84
H 80 3501	THIRD GENERATION PHOTOCATHODE ON FIBER OPTIC FACEPLATE ITT INSTALLED NAV-TEC MO-VPE SYSTEM AND MADE 30 LIQUID PHASE EPITAXY GROWTH RUNS ON GA-AS SUBSTRATES. BOND PRESSURE/TEMP DURING SUBSTRATE SEALING AFFECT SENSITIVITY OF ACTIVATED PHOTOCATHODES. SAMP FACE PLATES HAVE COSMETIC PROBLEMS.	572.4	492.4	20.0	MAR 82	MAR 82
H 79 3504	ADV METH F/FABR CHALCOGENIDE CL IR LENS BKS AMORPHOUS MATERIAL INC. USED COMPUTER CONTROLLED FURNACE TO CAST 10 INCH DIAMETER GE-AS-SE GLASS PLATES. OPTIMIZED PLATE DIMENSIONS AND IMPROVED DRILLING, SAWING, GRINDING AND POLISHING WILL INCREASE LENS BLANK YIELD FROM PLATES OVER 100%.	305.1	258.3	38.5	MAY 81	JUN 81
H 80 3510	TRANSDUCER PROCESS TECHNOLOGY FOR MW DELAY LINES WESTINGHOUSE ORDERED EQUIPMENT TO CLEAN QUARTZ OR SAPPHIRE CRYSTALS, SPUTTER ON ZINC OXIDE PIEZO-ELECTRIC MATERIAL AND CHROME-GOLD CONDUCTORS, AND PHOTO-ETCH TO DEFINE THE LINES AND AREAS. WEST IS NOW QUALIFIED TO DEPOSIT SERIES DELAY LINE TRANSDUCER	569.0	272.1	130.0	AUG 82	AUG 82

MANUFACTURING METHODS AND TECHNOLOGY PROGRAM
S U M M A R Y P R O J E C T S T A T U S R E P O R T
2ND SEMIANNUAL SUBMISSION CY 80 RCS DRCMT-301

PROJ NO.	TITLE + STATUS	AUTHO-RIZED ($000)	CONTRACT VALUES ($000)	EXPENDED LABOR AND MATERIAL ($000)	ORIGINAL PROJECTED COMPLETE DATE	PRESENT PROJECTED COMPLETE DATE
H 78 3511	FAB OF SUBMICRON PHOTOMASKS FOR INTEGRATED CIRCUIT DEVICES A CONTRACT FOR THE DIRECT WAFER STEPPER WAS LET TO OPTIMETRIX CORP FOR DELIVERY IN MAY 81. ACCEPTANCE TESTS ARE BEING DEVELOPED AT HDL. SHORT WAVELENGTH UV OPTICS ARE BEING INCORPORATED. WILL PERMIT SUB-MICRON LINE WIDTHS FOR ADVANCED PATTERNING.	732.0	713.7	18.3	SEP 81	SEP 81
H 79 3516	CRYOGENIC COOLER HYBRID MOTOR CIRCUIT AEROFLEX SUFFERED DELAYS DUE TO PERSONNEL CHANGES AND NEED FOR NEW SUBSTRATES. ALSO, TRANSISTORS WERE DAMAGED BY INEFFECTIVE CLEANING AND AMBIENT MOISTURE. TRANSISTOR DICE INSPECTION AND FINAL INSPECTION NEED STRENGTHENING. 5 SAMPLES ARE BEING BUILT.	175.9	140.8	20.0	JUN 81	DEC 81
H 79 5000	PRODUCTION HOT FORGING OF ALKALI HALIDE LENSES HONEYWELL IS HOT PRESSING POTASSIUM BROMIDE TO FORM LENS BLANKS. THE PRESS NOW USES CONSTANT STRAIN INSTEAD OF CONSTANT RATE. INERT GAS PRESSURE WAS REDUCED FROM SEVERAL ATMOSPHERES TO ONE. LENSES WILL NEED COATING FOR MOISTURE PROTECTION.	591.0	541.0	40.0	SEP 81	SEP 81
H 79 5042	LARGE DIAMETER ND LITTON HAS GROWN 50MM DIAMETER NEODYMIUM YTTRIUM ALUMINIUM GARNET(ND-YAG)) BOULES TO 64MM LENGTHS. CRYSTALS HAVE BLOSSOMING & CRACKS BUT QUALITY IS IMPROVING & SUFFICIENT TO MAKE ENGINEERING SAMPLES. RODS CUT FROM BOULE ARE USED IN AN/GVS-5 LASER.	350.0	303.0	42.0	JUL 81	MAR 82
H 80 5094	MMI-8 KBIT MNOS BORAM WESTINGHOUSE ASSEMBLED 16-CHIP HYBRID CIRCUITS FOR 8K BLOCK OPERATED RANDOM ACCESS MEMORIES. WEST ALSO RECEIVED A CONTRACT TO SUPPLY SIMILAR UNITS TO NORDEN FOR THE MIFASS SYSTEM. THE FIRM DEMONSTRATED THE PROCESSES AND END ITEMS AT MTAG 80 MEETING.	80.0	80.0		JUN 81	SEP 81
H 80 5110	COMMON MODULE DETECTOR ARRAY SANTA BARBARA RESEARCH CENTER DOCUMENTED EVERY STEP IN THE ARRAY FABRICATION PROCESS. 53 STEPS ARE CANDIDATES FOR IMPROVEMENT. PROTOTYPE LAPPING AND POLISHING EQUIPMENT WAS INSTALLED AND USED ON 50 SAMPLES. COLD SHIELD TOOLING WAS ALSO INSTALLED.	1,150.0	1,090.7	32.4	JUN 81	SEP 81
H 81 5110	COMMON MODULE DETECTOR ARRAYS THIS PROJECT WAS JUST FUNDED. NO STATUS REPORT IS REQUIRED.	753.0				
H 80 5147	HI RESISTIVITY POLYCRSTALIN SILICON HEMLOCK SEMICONDUCTOR CORP WILL OPTIMIZE ITS TRICHLOROSILANE REACTOR TO PRODUCE DETECTOR GRADE POLYCRYSTALLINE SILICON. THE POLY MATERIAL WILL BE REFINED IN AN AUTOMATIC FLOAT ZONER IN A GOCO PRODUCTION FACILITY ON PROJ 5810047.	340.0	300.0	29.0	SEP 82	SEP 81

MANUFACTURING METHODS AND TECHNOLOGY PROGRAM
S U M M A R Y P R O J E C T S T A T U S R E P O R T
2ND SEMIANNUAL SUBMISSION CY 80 RCS DRCMT-301

PROJ NO.	TITLE + STATUS	AUTHO-RIZED ($000)	CONTRACT VALUES ($000)	EXPENDED LABOR AND MATERIAL ($000)	ORIGINAL PROJECTED COMPLETE DATE	PRESENT PROJECTED COMPLETE DATE
H 80 9563	MINATURE HIGH VOLTAGE POWER SUPPLYS FOR NIGHT VISION GOGGLES DELIVERY OF THE FIRST AND SECOND ENGINEERING SAMPLES WILL BE DELAYED. A DESIGN CHANGE IS BEING INCORPORATED TO FACILITATE TRANSFORMER MOUNTING. THE SECOND SAMPLE IS BEING DELAYED BY A DESIGN MODIFICATION TO REDUCE INPUT CURRENT. R&D NOT COMPLETE?	535.0	349.1	15.0	JUN 82	OCT 82
H 80 9588	THIRD GENERATION LOW COST IMAGE INTENSIFIER TUBES A PROCUREMENT DATA PACKAGE WAS SENT TO THE CONTRACTING OFFICER. ONE OR TWO FIRMS WILL PROVE PROCESSES FOR LOWER COST MANUFACTURE AND SALVAGE OF 3RD GEN GOGGLE TUBES. WILL INCLUDE BAKEOUT AND ELECTRON SORBTION OF MICROCHANNEL PLATE AND PHOSPHOR SCREEN	900.0		10.0	APR 83	APR 83
2 76 9738	EPITAXIAL + METALLIZATION PROCESSES F/GAAS IMPATT DIODES MICROWAVE ASSOC APPLIED AUTOMATIC CONTROLS TO EPITAXIAL GROWTH & DOPING THRU CONTROL OF GAS FLOW AND DEPOSITION RATES. REDUCED OPERATOR CONTROL AND INCREASED USE OF FEEDBACK RESULTED IN IMPROVED PROFILES AND PERFORMANCE OF GAAS DIODES.	248.8	247.0		JUN 77	MAY 81
H 78 9738	PULSED GALLIUM ARSENIDE IMPATT DIODES MICROWAVE ASSOCIATES EXTENDED AUTOMATED GROWTH CONTROLS DEVELOPED ON 2769738. A FIRE AND SPRINKLERS DAMAGED THE CONTROL COMPUTER AND DELAYED THE WORK 3 MONTHS. SINGLE WAFER PERFORMANCE IS EXCELLENT BUT WAFER-TO-WAFER PERFECTION MUST BE DEMONSTRATED.	500.0	441.2	40.0	JUN 80	MAR 82
2 77 9751	MFG METHODS FOR FABRICATION OF YAG LASER RODS LITTON EXHAUSTED ITS FUNDS AND IS WRITING THE FINAL REPORT WITH COMPANY FUNDS. BATCH GRINDING AND POLISHING JIGS AND FIXTURES DEVELOPED HERE ARE BEING USED TO POLISH RODS FOR GVS-5 LASER RANGE FINDER. DEMO HELD 22 JULY 80. PROJ IS SELF-IMPLEMENTING.	142.0	119.0	23.0	JAN 79	JUN 81
2 77 9754	CONTIN CYCLE PROC OF SHOCK RESISTANT QUARTZ CRYSTAL UNITS GEND IS USING ITS VACUUM QUARTZ CRYSTAL FAB FACILITY BUILT UNDER 276 9754 AS PART OF A PILOT LINE CAPABLE OF PRODUCING 55 CRYSTALS PER DAY. CONFIRMATORY RUN IS NOW IN PROGRESS. COST OVERRUN RESULTED IN REDUCTION IN PILOT RUN FROM 1400 UNITS TO 700.	2,093.8	2,030.8	63.0	DEC 79	AUG 80
2 76 9766	DEPOSITION OF A HIGHVOLTAGE INSULATING LAYE FOR THICK FILM ERIE TECH IS BUILDING NEW DESIGN THICK FILM HYBRID MULTIPLIER MODULES. CONFIRMATORY SAMPLES SHOW UNDESIRABLE HIGH CHARGING CURRENTS. 10 UNITS MADE WITH SMALLER CAPACITOR PADS TO CORRECT PROBLEM ALSO FAILED TEST. ADDITIONAL CONTRACT SLIPPAGE EXPECTED.	162.9	128.4	35.0	AUG 78	JUN 81
H 79 9783	PRODUCTION OF HIGH RESISTIVITY SILICON MATERIAL HUGHES PROJECTED A COST GROWTH OF $500K FOR AN AUTOMATED ZONER. SCOPE OF WORK WAS REDUCED TO AN "AUTOMATION-READY" ZONER AND SIZE FROM 4" TO 3". COST GROWTH WAS REDUCED TO $325K. WORK AND FUNDING ARE JOINT WITH AIR FORCE. WORK ON COMPONENTS STARTED.	918.0	858.0	34.5	DEC 81	DEC 81

MANUFACTURING METHODS AND TECHNOLOGY PROGRAM
S U M M A R Y P R O J E C T S T A T U S R E P O R T
2ND SEMIANNUAL SUBMISSION CY 80 RCS DRCMT-301

PROJ NO.	TITLE + STATUS	AUTHO-RIZED ($000)	CONTRACT VALUES ($000)	EXPENDED LABOR AND MATERIAL ($000)	ORIGINAL PROJECTED COMPLETE DATE	PRESENT PROJECTED COMPLETE DATE
2 77 9792	PDN OF FUNNELLED MCPS WITH HIGH SECONDARY EMITTING COATNG GALILEO CORP LEARNED HOW TO REDUCE EMISSION DEFECTS AT HIGH FIELD EMISSION POINTS. EARLIER THEY WORKED ON FIBER DRAWING, FUSING, FUNNELING, COATING, FILM EVAPORATION, TESTING, AND HOW TO SALVAGE MCPS WITH DEFECTIVE FILMS. 3 MONTH DELAY GRANTED.	600.0	471.7	128.3	MAR 80	JUN 81
H 78 9793	PRODUCTION OF INTAGLIATED FIBER OPTIC PHOSPHOR SCREEN ITT COMPLETED WORK ON THE CONTRACT AND IS USING THE PROCESSES TO MAKE FIBER OPTIC PHOSPHORUS SCREENS FOR THE AN/VVS-2 DRIVERS SIGHT MNT PROJECT. CONTRACT WAS FOR CORE ETCHING AND WALL METALLIZATION TO REDUCE LIGHT SCATTERING.	200.0	177.1	32.0	DEC 79	JAN 81
2 77 9805	AUTO MICROCIRCUIT BRIDGE PDN MEASURE OF QUARTZ CRYSTALS HUGHES BUILT AN ADVANCED QUARTZ CRYSTAL PARAMETER MEASURING SYSTEM WITH TEST CAPACITY OF 25 UNITS A DAY. NEW MICROCIRCUIT BRIDGE IS UNDER EVALUATION. TEST SYSTEM IS 75 PERCENT COMPLETE. RESULTANT TEST TECHNIQUES TO BE INCORPORATED INTO MIL-C-3098 SPE	816.0	716.0	75.0	JAN 79	JUL 81
H 79 9805	QUARTZ CRYSTAL PARAMETER TESTING FOLLOW-ON TO ABOVE. HUGHES WILL INCREASE TESTING CAPACITY OF PREVIOUS SYSTEM TO 200 CRYSTALS A DAY. CRYSTAL FREQUENCY, TEMPERATURE & AGING CHARACTERISTICS WILL BE AUTOMATICALLY MEASURED, EVALUATED, DISPLAYED & STORED. EQUIPMENT PURCHASE HAS BEGUN.	725.0	663.0	10.0	JUN 80	JUN 82
H 79 9807	PROCESSING HIGH STABILITY QUARTZ CRYSTAL UNIT GEND IS EXPANDING THE VACUUM QUARTZ CRYSTAL PROCESSING EQUIPMENT BUILT UNDER 277 9754. MODIFICATIONS WILL INCREASE FIXTURE VACUUM & PROVIDE GREATER CONTROL OF CRYSTAL CUTTING, LAPPING & POLISHING. TEST EQUIPMENT WAS CHANGED & LONG LEAD ITEMS ORDERED.	760.0	702.0	33.5	MAR 81	AUG 83
2 77 9809	MEAS TECHNIQ FOR CHMICALS IN MFG PROC FOR SOLID ST MICROWV MEASUREMENTS OF IMPURITY TYPE AND LEVEL DURING MFG OF PIN DIODE WERE COMPLETED. CONTRACTOR, RAD ELECTRONICS DIVISION REPORTED NO PROGRESS FOR THIS PERIOD.	639.1	632.1	7.0	NOV 78	DEC 81
2 77 9812	SPLIT CYCLE STIRLING COOLER MARTIN MARIETTA INSTALLED NEW MOTOR STATORS IN THE COOLERS AND PUT THEM ON LIFE TEST AFTER THE MOTORS HAD EARLIER FAILED. MARTIN LEARNED HOW TO SHAPE, FINISH, AND HANDLE THIN METAL STAMPINGS. INTEREST WAS SHOWN BY THE CHEMICAL SYSTEMS LAB.	795.0	439.0	65.0	JAN 80	JUN 81
2 77 9813	RUGGEDIZED LOW COST QUADRANT DETECTOR FOR CLGS. TI SUBMITTED A PROPOSAL TO TERMINATE THE CONTRACT BECAUSE THEIR DETECTORS HAVE VARYING DARK CURRENTS AND ALSO MAY NOT BE COST COMPETITIVE WITH MARTIN MARIETTA'S. DETECTORS PASSED FIRING TESTS. EARLIER, EPOXY BONDED UNITS FAILED THERMAL SHOCK TEST.	375.0	159.0	40.0	JAN 80	SEP 81

MANUFACTURING METHODS AND TECHNOLOGY PROGRAM
S U M M A R Y P R O J E C T S T A T U S R E P O R T
2ND SEMIANNUAL SUBMISSION CY 80 RCS DRCMT-301

PROJ NO.	TITLE + STATUS	AUTHO-RIZED ($000)	CONTRACT VALUES ($000)	EXPENDED LABOR AND MATERIAL ($000)	ORIGINAL PROJECTED COMPLETE DATE	PRESENT PROJECTED COMPLETE DATE
H 79 9838	MINIATURE CATHODE RAY TUBES A CONTRACT WAS LET TO THOMAS ELECTRONICS IN SEPT 80. TUBE ASSEMBLIES UTILIZING THE NEW GUN STRUCTURE AND DEFLECTION COIL HAVE BEEN FABRICATED. TUBES ARE PRESENTLY BEING EVALUATED.	368.7	278.7	59.0	AUG 81	APR 82
H 79 9844	CMOS CIRCUITS USING SILICON ON SAPPHIRE -SOS-TECHNOLOGY ROCKWELL CONTRACTED TO UNION CARBIDE TO LOOK AT SAPHIRE GROWTH RATEST TEMPERATURES. & FILM THICKNESS & PRE-EPITAXIAL GROWTH CONDITION. 60 3"SOS WAFERS WERE MARKED AND STARTED THRU SOS PROCESSING.ROCKWELL WILL DIFFUSE LSI ICS ON THE SOS LAYER FOR GPS.	770.0	666.4	49.1	NOV 81	DEC 82
2 77 9645	NUMERICALLY CONTROLLED OPTICAL FABRICATION UTILIZING VACUUM CHUCKING AND INTERFEROMETRIC CHECKING PROCEDURES TWO SETS OF GERMANIUM IMAGING LENSES HAVE BEEN FABRICATED AND DELIVERED. IMPROVEMENT IS NEEDED IN THE AREAS OF TOOL MAPPING AND CENTERING, IN ORDER TO OVERCOME MACHINING PROBLEMS.	333.3	304.3	28.5	OCT 77	APR 81
2 77 9857	AUTO SEPARATION, CARRIER MOUNTING + TESTING OF SEMI-CDT DICE HONEYWELL DEMONSTRATED TAPE AUTOMATED BONDING TO 50 ENGINEERS ON 20 NOV 80. 1200 COUNTER HYBRIDS HAVE BEEN BUILT USING TAB. 500 MODULES WERE PROVIDED TO ERADCOM. 36 CHIPS ARE BONDED TO 2X2 INCH SUBSTRATES. TAB IS USED IN 4 DOD DEVELOPMENT PROGRAMS.	1,275.0	1,129.3	131.0	OCT 79	JUL 81
H 78 9860	PDN TECHQE-GALLIUM ARSENIDE MIWAV FIELD EFFECT TRANSISTORS HUGHES ESTABLISHED AN AUTOMATED WAFER PROCESSING LINE FOR GALLIUM ARSENIDE (GAAS) FIELD EFFECT TRANSISTORS (FET). ION IMPLANTATION & ELECTRON-BEAM LITHOGRAPHY WERE USED. CONFIRMATORY PHASE IS NOW UNDERWAY. PACKAGES FAILED ELECTRICAL AT 16 GHZ.	469.3	399.3	59.0	NOV 80	SEP 81
2 77 9873	ANTENNA PATTERN MEASUREMENTS USING NEARFIELD TECHNIQUES THE ENTIRE SYSTEM, WHICH CONSISTS OF FOUR MAJOR ELEMENTS HAS BEEN ASSEMBLED AND IS OPERATIONAL. A GROUP OF AN/TPQ-36 ANTENNAS HAS BEEN MEASURED ON BOTH THE NF SYSTEM AND ON A FAR FIELD RANGE. PM FIREFINDER HAS PROVIDED FUNDS FOR DEMONSTRATION.	719.4	692.4	27.0	OCT 79	MAR 81
H 79 9877	LIGHT EMITTING DIODE ARRAY COMMON MODULE SPECTRONICS HAS CONTAMINATION PROBLEMS IN REACTORS USED TO EPITAXIALLY GROW GALLIUM ARSENIDE PHOSPHIDE FOR LIGHT EMITTING DIODE ARRAYS. GAS HANDLING NETWORK WAS REDESIGNED & USE OF HIGHER PURITY GASES IS UNDERWAY. COMPLETION DATE EXTENDED 6 MOS.	625.6	575.6	48.7	APR 81	DEC 81
H 78 9889	THIRD GENERATION 0.9 MICRON WAFER INTENSIFIER TUBE SEE TASKS A AND B BELOW. CONTRACTORS HAVE SPENT FUNDS FASTER THAN PLANNED AND ARE NOT ABLE TO PRODUCE AND DELIVER SAMPLE 3RD GEN IMAGE TUBES AS REQUIRED. PROJECT HAS COST OVERRUNS AND SCHEDULE SLIPPAGE.	1,770.0	161.1	145.0	JUN 81	SEP 81

MANUFACTURING METHODS AND TECHNOLOGY PROGRAM
S U M M A R Y P R O J E C T S T A T U S R E P O R T
2ND SEMIANNUAL SUBMISSION CY 80 RCS DRCMT-301

PROJ NO.	TITLE + STATUS	AUTHO-RIZED ($000)	CONTRACT VALUES ($000)	EXPENDED LABOR AND MATERIAL ($000)	ORIGINAL PROJECTED COMPLETE DATE	PRESENT PROJECTED COMPLETE DATE
H 78 9889 A	THIRD GENERATION 0.9 MICRON WAFER INTENSIFIER TUBE (ITT) ITT HAS ITS 12-TUBE PROCESSING CHAMBER TESTED BUT IS WAITING FOR GOOD QUALITY GA-AS CATHODES. DELAY WAS CAUSED BY OTHER WORK PRIORITY AND 3RD GEN TECHNICAL PROBLEMS. REMAINING FUNDS WILL PROVIDE ONLY 12 TUBES. TWO SAMPLE TUBES WERE DELIVERED.	710.1	632.1	75.0	JUN 81	SEP 81
H 78 9889 B	THIRD GENERATION 0.9 MICRON WAFER INTENSIFIER TUBE (VARIAN) VARIAN EXHAUSTED ITS FUNDS AND CANNOT COMPLETE HARDWARE AND SOFTWARE REQUIREMENTS WITHOUT ADDITIONAL FUNDING. VARIAN REQUESTED $481K MORE. CONTRACT IS TO BE MODIFIED TO REQUIRE ONLY SOFTWARE. SAMPLES MADE IN MULTI-PROCESSOR MET SPECIFICATIONS.	1,060.0	960.0	70.0	JUN 81	OCT 81
H 80 9897	SURFACE ACOUSTIC WAVE RESONATOR + REFLECTIVE ARRAY DEVICES DRY ETCHING PROCESSES ARE BEING TESTED TO DETERMINE THE BEST FOR UNIFORMITY AND REPEATABILITY. ELECTRICAL DESIGNS FOR THE RESONATOR AND COMPRESSOR ARE NEARLY COMPLETED. SEVERAL CONFERENCES HAVE BEEN HELD WITH PROSPECTIVE SUPPLIERS OF PACKAGES.	596.4	569.4	1.5	AUG 82	OCT 82

MANUFACTURING METHODS AND TECHNOLOGY PROGRAM
S U M M A R Y P R O J E C T S T A T U S R E P O R T
2ND SEMIANNUAL SUBMISSION CY 80 RCS DRCMT-301

PROJ NO.	TITLE + STATUS	AUTHO-RIZED ($000)	CONTRACT VALUES ($000)	EXPENDED LABOR AND MATERIAL ($000)	ORIGINAL PROJECTED COMPLETE DATE	PRESENT PROJECTED COMPLETE DATE
4 7T 5052	ARMY ENGINEERING DESIGN HANDBOOK FOR PRODUCTION SUPPORT CONTINUED WORK ON 706-100, DESIGN GUIDE FOR PRODUCIBILITY, 706-158 AND 159, DYNAMICS OF BALLISTIC IMPACT, PART I AND II OF 706-199, DEVELOPMENT GUIDE FOR RELIABILITY.	383.0	383.0		JUN 78	MAR 81
4 77 5052	ARMY ENGINEERING DESIGN HANDBOOK FOR PRODUCTION SUPPORT WORK CONTINUES ON UPDATING AND PREPARING NEW ENGINEERING DESIGN HANDBOOKS FOR PRODUCTION SUPPORT. SELECTED EXAMPLES INCLUDE WORK IN EXPERIMENTAL STATISTICS, MAINTAINABILITY AND SAFETY, DESIGN GUIDES, PLUS OTHER TECHNICAL AREAS.	305.0	208.0	97.0	SEP 79	JUN 81
D 78 5052	ARMY ENGINEERING DESIGN HANDBOOK FOR PRODUCTION SUPPORT WORK CONTINUES ON UPDATING AND PREPARING NEW ENGINEERING DESIGN HANDBOOKS FOR PRODUCTION SUPPORT. SELECTED EXAMPLES INCLUDE WORK IN MATERIAL DETERIORATION PREVENTION AND CONTROL, QUALITY ASSURANCE IN HELICOPTER ENGINEERING, PLUS OTHER TECHNICAL AREAS	870.0	742.0	82.0	NOV 79	JAN 82
D 79 5052	ARMY ENGINEERING DESIGN HANDBOOK FOR PRODUCTION SUPPORT WORK CONTINUES ON UPDATING AND PREPARING NEW ENGINEERING DESIGN HANDBOOKS FOR PRODUCTION SUPPORT. SELECTED EXAMPLES INCLUDE WORK ON THE DESIGN GUIDE FOR PRODUCIBILITY, MATERIALS ENGINEERING FOR PLASTIC PRODUCT DESIGN.	495.0	387.8	71.2	MAY 83	MAY 83
D 80 5052	ARMY ENGINEERING DESIGN HANDBOOKS FOR PRODUCTION SUPPORT WORK WAS INITIATED ON A NEW HANDBOOK ON THE METEOROLOGICAL EFFECTS ON MILITARY MATERIAL AND WEAPON SYSTEMS. WORK CONTINUES ON UPDATING AND PREPARING NEW HANDBOOKS FOR PRODUCTION SUPPORT. REVISIONS INCLUDE FUZES HYDRAULIC FLUIDS PLUS OTHER TECH AREAS.	460.0	432.0	25.1	JAN 83	JAN 83
D 81 5053	DIGITAL ELEVATION DATA DUBBING FACILITY (DEDDF) THIS PROJECT WAS JUST FUNDED. NO STATUS REPORT IS REQUIRED.	170.0				

HQ-DARCOM & ARMY MATERIALS AND MECHANICS RESEARCH CENTER & DESCOM

CURRENT FUNDING STATUS, 2ND CY80

FISCAL YEAR	NO. OF PROJECTS	AUTHORIZED FUNDS ($)	CONTRACT FUNDING ALLOCATED ($)	CONTRACT FUNDING EXPENDED ($)	INHOUSE FUNDING REMAINING ($)	INHOUSE FUNDING EXPENDED ($)
77	1	383,000	383,000	251,300 (65%)	0	0 (0%)
77	1	305,000	208,000	[illegible],100 (70%)	97,000	97,000 (100%)
78	2	5,370,000	1,946,700	812,700 (41%)	3,423,300	3,377,300 (98%)
79	3	5,417,900	2,749,600	976,800 (35%)	2,668,300	2,593,400 (97%)
80	4	5,206,000	2,391,700	1,210,200 (50%)	2,814,300	2,718,700 (96%)
81	2	260,000	0	0 (0%)	260,000	0 (0%)
82	0	0	0	0 (0%)	0	0 (0%)
TOTAL	13	16,941,900	7,679,000	3,400,700 (44%)	9,262,900	8,786,400 (94%)

AUTHORIZED FUNDING CONTRACT ALLOCATED 45% INHOUSE REMAINING 54%

MANUFACTURING METHODS AND TECHNOLOGY PROGRAM
S U M M A R Y P R O J E C T S T A T U S R E P O R T
2ND SEMIANNUAL SUBMISSION CY 80 RCS DRCMT-301

PROJ NO.	TITLE + STATUS	AUTHO-RIZED ($000)	CONTRACT VALUES ($000)	EXPENDED LABOR AND MATERIAL ($000)	ORIGINAL PROJECTED COMPLETE DATE	PRESENT PROJECTED COMPLETE DATE
4 7T 5052	ARMY ENGINEERING DESIGN HANDBOOK FOR PRODUCTION SUPPORT CONTINUED WORK ON 706-100, DESIGN GUIDE FOR PRODUCIBILITY, 706-158 AND 159, DYNAMICS OF BALLISTIC IMPACT, PART I AND II OF 706-199, DEVELOPMENT GUIDE FOR RELIABILITY.	383.0	383.0		JUN 78	MAR 81
4 77 5052	ARMY ENGINEERING DESIGN HANDBOOK FOR PRODUCTION SUPPORT WORK CONTINUES ON UPDATING AND PREPARING NEW ENGINEERING DESIGN HANDBOOKS FOR PRODUCTION SUPPORT. SELECTED EXAMPLES INCLUDE WORK IN EXPERIMENTAL STATISTICS, MAINTAINABILITY AND SAFETY, DESIGN GUIDES, PLUS OTHER TECHNICAL AREAS.	305.0	208.0	97.0	SEP 79	JUN 81
D 78 5052	ARMY ENGINEERING DESIGN HANDBOOK FOR PRODUCTION SUPPORT WORK CONTINUES ON UPDATING AND PREPARING NEW ENGINEERING DESIGN HANDBOOKS FOR PRODUCTION SUPPORT. SELECTED EXAMPLES INCLUDE WORK IN MATERIAL DETERIORATION PREVENTION AND CONTROL, QUALITY ASSURANCE IN HELICOPTER ENGINEERING, PLUS OTHER TECHNICAL AREAS	870.0	742.0	82.0	NOV 79	JAN 82
D 79 5052	ARMY ENGINEERING DESIGN HANDBOOK FOR PRODUCTION SUPPORT WORK CONTINUES ON UPDATING AND PREPARING NEW ENGINEERING DESIGN HANDBOOKS FOR PRODUCTION SUPPORT. SELECTED EXAMPLES INCLUDE WORK ON THE DESIGN GUIDE FOR PRODUCIBILITY, MATERIALS ENGINEERING FOR PLASTIC PRODUCT DESIGN.	495.0	387.8	71.2	MAY 83	MAY 83
D 80 5052	ARMY ENGINEERING DESIGN HANDBOOKS FOR PRODUCTION SUPPORT WORK WAS INITIATED ON A NEW HANDBOOK ON THE METEOROLOGICAL EFFECTS ON MILITARY MATERIAL AND WEAPON SYSTEMS. WORK CONTINUES ON UPDATING AND PREPARING NEW HANDBOOKS FOR PRODUCTION SUPPORT. REVISIONS INCLUDE FUZES HYDRAULIC FLUIDS PLUS OTHER TECH AREAS.	460.0	432.0	25.1	JAN 83	JAN 83
D 81 5053	DIGITAL ELEVATION DATA DUBBING FACILITY (DEDDF) THIS PROJECT WAS JUST FUNDED. NO STATUS REPORT IS REQUIRED.	170.0				

MANUFACTURING METHODS AND TECHNOLOGY PROGRAM
S U M M A R Y P R O J E C T S T A T U S R E P O R T
2ND SEMIANNUAL SUBMISSION CY 80 RCS DRCM1-301

PROJ NO.	TITLE + STATUS	AUTHO-RIZED ($000)	CONTRACT VALUES ($000)	EXPENDED LABOR AND MATERIAL ($000)	ORIGINAL PROJECTED COMPLETE DATE	PRESENT PROJECTED COMPLETE DATE
M 78 6350	MATERIALS TESTING TECHNOLOGY (MTT) FOR PROJECT STATUS SEE SUBTASKS BELOW.	4,500.0	1,204.7	3,295.3	JUN 79	NOV 80
M 78 6350 2029	MINI COMPUTER MAPPING OF FATIGUE 'ACKS IN THREADS THIS TASK HAS BEEN COMPLETED. THE TECHNICAL REPORT IS IN THE PROCESS OF BEING WRITTEN.	53.0		53.0		DEC 80
M 78 6350 2200	SIZING AND COUNTING CONTAMINANTS IN RECOIL HYDRAULIC REVISIONS TO THE CONTRACTOR ESTABLISHED OPERATING PARAMETERS HAVE BEEN MADE TO ADAPT THE SYS TO MORE CLOSELY MEET THE RIA REQ. THE NEW SAMPLE PREPARATION TECHNIQUE ALLOWS MORE AND DIFFERENT TYPES OF PARTICLES TO BE OBSERVED.	90.0		83.4	APR 80	MAR 81
M 78 6350 2201	HOT ROTARY FORGED TUBE LASER GAGE MEASUREMENT THIS TASK HAS BEEN COMPLETED. THE INSTALLATION OF THE LASER BAR GAGE SYSTEM AT THE ROTARY FORGE SITE HAS BEEN COMPLETED. THE ACCEPTANCE TESTING OF THE SYS WAS COMPLETED IN OCT 1980. THE IMPLEMENTATION IS SCHEDULED FOR COMPLETION 1 JAN 1981.	115.0		115.0	JUN 80	DEC 80
M 78 6350 2202	DYNAMIC TWIST MEASUREMENT OF RIFLING MACHINES THIS EFFORT HAS BEEN COMPLETED. THE FINAL TECHNICAL REPORT IS IN THE PROCESS OF BEING FINALIZED. THE FIXTURE WAS PRODUCED + ASSY WITH THE ROTARY ENCODER. THE GAGE HEAD ASSY WAS INTERFACED WITH THE CAL/PRINTER + TESTED.	36.0		36.0	APR 80	SEP 80
M 78 6350 2205	HOLOGRAPHIC INSPECTION OF ROTARY FORGED PREFORMS ALL MAJOR ELECTRONIC COMPONENTS FOR ULTRASONIC FLAW DETECTION SYSTEM HAS BEEN ACQUIRED. THE EFFORT IS PROGRESSING SMOOTHLY. HOWEVER DUE TO THE PREVIOUS SWITCH IN CONTRACTORS, THERE WILL UNDOUBTEDLY BE A DELAY IN THE COMPLETION OF THIS EFFORT.	80.0		16.0	NOV 80	JUN 81
M 78 6350 2206	OPTICAL DETERMINATION OF DIMENSIONAL GAPS ON TANK PROJECTILE THE PROTOTYPE OGIT WAS DESINGED, BUILT & SUCCESSFULLY ACCEPTANCE TESTED AT THE CONTRACTOR'S FACILITY. THE UNIT WAS DELIVERED TO MILAN AAP & THE ACCEPTANCE TEST WAS AGAIN SUCCESSFULLY PERFORMED.	125.0		89.0	MAY 80	JAN 81
M 78 6350 2213	LASER INTERFEROMETER CALIBRATION STATION THIS EFFORT WAS COMPLETED. THE SYSTEM IS IN THE PROCESS OF BEING IMPLEMENTED.	60.0		60.0	APR 80	DEC 80
M 76 6350 2214	ELECTROTHERMAL ANALOG RESPONSE INSP OF EED'S ARRADCOM 12-78 PHASE I OF THIS TASK, LITERATURE SEARCH, LABORATORY EQUIPMENT SET-UP, AND THE PERFORMING OF THERMAL RESPONSE TESTING AND MEASUREMENTS UTILIZING NON-EXPLOSIVE DEVICES, HAS BEEN COMPLETED.	75.0		75.0	OCT 80	JUN 81

MANUFACTURING METHODS AND TECHNOLOGY PROGRAM
S U M M A R Y P R O J E C T S T A T U S R E P O R T
2ND SEMIANNUAL SUBMISSION CY 80 RCS DRCMT-301

PROJ NO.	TITLE + STATUS	AUTHO-RIZED ($000)	CONTRACT VALUES ($000)	EXPENDED LABOR AND MATERIAL ($000)	ORIGINAL PROJECTED COMPLETE DATE	PRESENT PROJECTED COMPLETE DATE
M 78 6350 2215	RADAR METHOD FOR SENSING AND OUTPUT TESTING OF DETONATORS THIS TASK HAS BEEN COMPLETED. THE TECHNICAL REPORT HAS BEEN COMPLETED. AN EVALUATION OF THIS PROJECT IS IN PROCESS TO DETERMINE FUTURE EFFORTS.	133.0		133.0		DEC 80
M 78 6350 2220	MECHANICAL TEST FOR COMPOSITES IN TUBULAR SHAPES IN THOSE INSTANCES, WHERE THE TUBES WERE ARTIFICIALLY FLAWED, BOTH THE OPTICAL HOLOGRAPHY AND ELECTRO-MECH SENSORS WERE NOT ABLE TO DETECT THE PRENCE OF THE FLAW. AFTER A CRITICAL EXAMINATION, IT WAS DETERMINED NOT TO CONTINUE THE SECOND PHASE.	75.0		75.0	JUL 80	MAY 81
M 78 6350 2224	AUTOMATED ANTENNA PATTERN MEASUREMENT THE REDESIGN OF THE PATRIOT FUZE ANTENNA SYS HAS BEEN COMPLETED. EFFORTS ARE UNDERWAY TO OBTAIN FUNDING TO ACCOMODATE THE ANTENNA REDESIGN IMPACT ON THIS EFFORT. A REQUEST FOR ADDITIONAL FUNDING IS BEING PREPARED FOR SUBMISSION TO AMMRC.	45.0		45.0	DEC 79	SEP 81
M 78 6350 2225	3-D SHOCK/VIBRATION TEST FOR MISSILE ARTLY FUZE MATL ESTABLISHED THE MECHANICAL CONF OF THE 3D-VTS. REVIEWED HDL FACILITIES DESIGN. ESTABLISHED SPEC FOR THE SHAKER SYST + AWARDED THE CONTRACT. DRAFTED THE TECH DATA PACKAGE FOR 3D-VCS, 3D-VES, AND 3D-VDS.	69.5		69.5	NOV 80	AUG 81
M 78 6350 2226	AIR FLOW TEST EQUIPMENT THE CIRCUIT BOARDS FOR THE MICROPROCESSOR CONTROLLER HAVE BEEN COMPLETED. THE INTERFACE CIRCUITRY FOR CONTROLLING THE VALVES + SENSING SYS PRESSURE HAVE BEEN FABRICATED. THE PIPING SYSTEM IS NEAR COMPLETION.	85.0		84.6	AUG 80	MAR 81
M 78 6350 2227	SET-BACK DRAG TESTER FOR S+A DEVICES THIS TASK WAS COMPLETED. THE INSTRUCTION MANUAL AND TECHNICAL REPORTS ARE IN THE PROCESS OF BEING PREPARED. THESE DOCUMENTS ARE SCHEDULED TO BE COMPLETE 1 MARCH 1981.	86.0		86.0	JUN 80	MAR 81
M 78 6350 2229	ANALYSIS OF CHITIN IN CONTAMINATED JET AIRCRAFT FUELS THIS TASK HAS BEEN TERMINATED AS THE FUNDS WERE WITHDRAWN 30 SEPT 1980.	40.0		37.5	JUN 80	SEP 80
M 78 6350 2234	INSPECTION OF FLUX-CORED ARC WELDING THE WIRE SAMPLES WERE TESTED WITH THE EDDY CURRENT INSTR AT 700 FT/MIN, AS SPECIFIED. ALL VOIDS WERE DETECTED. RADIOGRAPHIC EXAMINATION OF THE VOIDS WAS COMPLETED IN JULY 1980. THE FINAL TECHNICAL REPORT HAS BEEN RETURN TO THE EDITOR FOR CORRECTIONS.	75.0		7.4		APR 81
M 78 6350 2241	DIELECTRIC TECH FOR NDE NON-CONDUCTING CERAMIC MATL A CONTRACT HAS BEEN AWARDED TO DEMONSTRATE APPLICABILITY OF IMPROVED EDDY CURRENT FIELD PROBES & INSTRUMENTATION FOR DEFECT DETECTION IN HOT PRESSED SILICON NITRIDE & SILICON CARBIDE MATL. FIVE CERAMIC TEST PLATES HAVE PREPARED & SHIPPED TO CONTR.	85.0			JUL 81	JUN 81

MANUFACTURING METHODS AND TECHNOLOGY PROGRAM
S U M M A R Y P R O J E C T S T A T U S R E P O R T
2ND SEMIANNUAL SUBMISSION CY 80 RCS DRCMT-301

PROJ NO.	TITLE + STATUS	AUTHO-RIZED ($000)	CONTRACT VALUES ($000)	EXPENDED LABOR AND MATERIAL ($000)	ORIGINAL PROJECTED COMPLETE DATE	PRESENT PROJECTED COMPLETE DATE
M 78 6350 2245	NONDESTRUCTIVE EVALUATION OF CERAMIC MATERIALS A REVIEW OF NDT TECHNIQUES FOR CERAMICS HAS BEEN COMPLETED. ALSO A REVIEW OF FLAW DETECTION REQ. FOR VARIOUS MATL WAS CONDUCTED. SPEC FOR PERFORMANCE & TEST EQUIP WERE PREPARED FOR HIGH FREQUENCY ULTRASONIC, ULTRASONIC MEAS & RESONANCE FREQUENCY.	148.0	86.1	61.9	DEC 80	APR 81
M 78 6350 2247	ULTRASONIC SPECTROSCOPY INSPECT ADHESIVE BINDED STRUCT THE CONTRACTOR IS CURRENTLY WORKING ON METAL-METAL BONDED STRUCTURES WHICH APPEAR TO BE EASIER TO HANDLE ULTRASONICALLY. THE CORRELATION BETWEEN THE ULTRASONIC SPECTROSCOPIC SIGNATURE AND DESTRUCTIVE MEASURED BOND STRENGTH HAVE NOT BEEN PROMISING.	100.0		65.0	SEP 81	MAY 81
M 78 6350 2248	FAST ULTRASONIIC INSPECTION OF ARTILLERY SHELLS THIS TASK HAS BEEN COMPLETED. THE INSTR IS CURRENTLY SCHEDULED TO BE PLACED IN A CONTRACTOR PLANT FEB 1981 FOR EXTENSIVE EVALUATION OF ITS CAPABILITY TO INSPECT ROTATING BANDS.	50.0		50.0		OCT 80
M 78 6350 2402	INSP PROC & TEST INSTRU F/MASS PROD SCATTERABLE MINES MICRO IN-HOUSE ENGINEERING EFFORTS FOR THIS PROJECT COMMENCED IN MARCH 1980. THE WORK ACCOMPLISHED TO DATE INDICATES THAT THE SUBJECT AREA ABOUNDS WITH IMPRACTICAL SOLUTIONS & IMPROPER PROBLEM DEFINITIONS.	18.0		18.0	JAN 82	MAR 82
M 78 6350 2423	INSP. OF KNURL FOR 155MM M549 RAP DOCUMENTATION , A GRI WAS PREPARED & PRESENTED TO INDUSTRY. PROPOSALS WERE RECEIVED FROM INDUSTRY AND EVALUATED. THE FINAL SCOPE OF WORK WAS PREPARED. A CONTRACT WAS NEGOTIATED & AWARDED.	86.0		86.0	OCT 80	FEB 81
M 78 6350 2431	COMPUTERIZED COLOR MATCHING SYSTEM THE RPI CONTRACT HAS BEEN COMPLETED. THIS CONTRACT PROVIDED A QUANTITATIVE COMPARISON OF THE THREE NEW COLOR SPECTROPHOTOMETER IN TERMS OF REPEATABILITY, STABILITY & OVER-ALL RELIABILITY.	415.0		325.9		OCT 82
M 78 6350 2434	RAPID NDT FOR DOPANT DENSITY AND DISTRIBUTION THIS TASK HAS BEEN COMPLETED. THE TECHNICAL REPORT IS BEING PREPARED AND WILL BE SUBMITTED TO AMMRC IN MARCH 1981.	19.0	5.0	14.0	MAR 80	MAR 81
M 78 6350 2449	GENERAL PURPOSE RESIDUAL STRESS ANALYZER THE ELASTIC STRESS CANTILEVER APPARATUS WAS MODIFIED TO FIT THE RIGAKU RESIDUAL STRESS ANALYZER. THIS APPARATUS BENDS A 1x12 INCH SPECIMEN ELASTICALLY IN A REPRODUCIBLE MANNER. A 1/4 INCH THICK SPECIMEN OF 6061 & 7005 ALUMINUM WAS RECEIVED.	25.0			JUN 80	MAR 81
M 79 6350	MATERIALS TESTING TECHNOLOGY (MTT) FOR PROJECT STATUS SEE SUBTASKS BELOW.	4,660.0	2,157.5	2,502.5	OCT 80	OCT 81

MANUFACTURING METHODS AND TECHNOLOGY PROGRAM
S U M M A R Y P R O J E C T S T A T U S R E P O R T
2ND SEMIANNUAL SUBMISSION CY 80 RCS DRCMT-301

PROJ NO.	TITLE + STATUS	AUTHO-RIZED ($000)	CONTRACT VALUES ($000)	EXPENDED LABOR AND MATERIAL ($000)	ORIGINAL PROJECTED COMPLETE DATE	PRESENT PROJECTED COMPLETE DATE
M 79 6350 2025	AUTO INSPECTION DEVICE FOR EXPLOSIVE CHARGE IN SHELL TERMINATION OF THE CONTRACT IS CONTINUING. THE CONTRACTUAL DOCUMENTS HAVE BEEN SUBMITTED TO THE CONTRACTOR FOR APPROVAL. THE GOVERNMENT ELECTED NOT TO PROCEED WITH PHASE III OF THE ORIGINAL CONTRACT.	531.5	228.0		JAN 80	DEC 80
M 79 6350 2214	ELECTROTHERMAL ANALOG RESPONSE INSP OF EED'S DATA HANDLING HAS BEEN IMPROVED. MANUAL SCANNING OF DIGITAL RECORDER FOR DATA HAS BEEN REPLACED BY CURSOR TRIGGERING. THIS HAS RESUTLED IN SIGNIFICANT SAVING OF TIME TO READ THERMAL RESPONSES. THIS COULD LEAD TO EVENTUAL AUTOMATED ON-LINE TESTING.	85.0		44.6		JUN 81
M 79 6350 2401	CANNON TUBE AUTOMATIC MAGNETIC BORESCOPE INSPECTION THE MRB SYSTEMS HAVE BEEN DELIVERED TO APG. THESE SYSTEMS ARE BOTH OPERATIONAL. DURING THE CHECK-OUT, IT WAS DISCOVERED THAT A FEW MODIFICATIONS WOULD BE REQ. THE SYS ARE BEING EVALUATED FOR CONTRACTUAL COMPLIANCE.	307.0		32.0	JUL 80	DEC 80
M 79 6350 2404	AUTO MEASUREMENT OF J-INTEGRAL FRACTURE TOUGHNESS THIS TASK HAS BEEN COMPLETED. A FINAL REPORT HAS BEEN DRAFTED AND SUBMITTED TO ASTM FOR PUBLICATION. ALSO THE RESULTS OF THIS PROGRAM WERE PRESENTED TO ASTM SUBCOMMITTEE E24.04 AT THEIR LATEST MEETING. THERE WAS INTEREST IN THE J5 METHOD.	44.0		44.0	JUL 80	SEP 80
M 79 6350 2405	BURN TIME TEST FOR ZIRCONIUM POWDER IN THERMAL BATTERY MODIFICATIONS ARE CONTINUALLY BEING MADE TO IMPROVE THE PROTOTYPE BURN TIME MEASURING SYS. WORK IS PROCEEDING ON THE FAB OF A DEVICE FOR MAKING ACCURATE BURN TIME MEASUREMENTS ON A SHORTER POWDER TRAIN.	70.0		47.8	DEC 80	DEC 81
M 79 6350 2410	ULTRASONIC TRANSDUCER EVALUATION INSTRUMENT A TRANSDUCER EVALUATION INSTR WAS DELIVERED. THIS INSTR IS CAPABLE OF GENERATING FAST BEAM PROFILE MEASUREMENTS, BOTH CONTACT & IMMERSION TYPE TRANSDUCERS. CURRENTLY, THIS INSTR IS BEING ENHANCED BY IMPROVING IMAGE DISPLAY & COMPTER PROCESSING CAP.	70.0		70.0	MAY 81	SEP 81
M 79 6350 2411	EVAL & APPL PYROELECTRIC VIVICON TO SHELTER PANELS EVALUATION & APPLICATION STUDIES OF THE AMMRC PYROELECTRIC VIDICON SYS HAVE BEEN DELAYED BY THE FAILURE OF EQUIP. TWO COMMERICIALLY AVAILABLE SYSTEMS ARE AVAILABLE AND ARE BEING CONSIDERED FOR COMPARISON WITH THE AMMRC SYSTEM.	65.0		55.0		JAN 81
M 79 6350 2412	MODAL ANALYSIS OF STRUCTURES DUE TO THE DIFFICULTIES ENCOUNTERED WITH THE SOLICITATION OF TESTING SERVICES, A CONTRACT OF EXPANDED SCOPE WAS AWARDED. TESTING OF TEN HONEYCOMB PANELS WITH VARIOUS SKIN & HONEYCOMB THICKNESS & CONTROLLED DEFECT ARE INCLUDED IN THIS CONTRACT.	50.0		48.0	AUG 81	APR 81

MANUFACTURING METHODS AND TECHNOLOGY PROGRAM
S U M M A R Y P R O J E C T S T A T U S R E P O R T
2ND SEMIANNUAL SUBMISSION CY 80 RCS DRCMT-301

PROJ NO.	TITLE + STATUS	AUTHO-RIZED ($000)	CONTRACT VALUES ($000)	EXPENDED LABOR AND MATERIAL ($000)	ORIGINAL PROJECTED COMPLETE DATE	PRESENT PROJECTED COMPLETE DATE
M 79 6350 2413	TESTING OF TIRES AND ELASTO RIC PRODUCTS THE MONOGRAPH "TIRE TESTING MPOSIA, A SUMMARY" WAS REVIEWED AND IS BEING PREPARED FOR PUBLIC TION. SUMMARIZED IN THIS DOCUMENT ARE THE RECOMMENDATIONS OF VARIOUS WORKING PANELS WHICH WERE HELD AS PART OF EACH OF THE TIRE TESTING SYMPOSIA.	52.0		40.0	SEP 80	JUN 81
M 79 6350 2417	COPPERHEAD CRITICAL FLAW DETECT OF COMPLEX COMPONENTS INVESTIGATION AND ANALYSIS OF THE INSPECTION PROBLEM LED TO THE SELECTION OF EDDY CURRENT AS THE PROPOSED NDT TECHNIQUE. THE SCOPES OF WORK WERE PREPARED. TECHNICAL PROPOSALS WERE EVALUATED AND THE CONTRACT WAS AWARDED 18 NOV 80.	35.0		22.0		OCT 81
M 79 6350 2418	HALF LIFE OF TRITIUM LUMINOUS LAMPS THE SCOPE OF WORK FOR CONTRACTOR SERVICES & REQUIRED IN-HOUSE & DATA MANAGEMENT EQUIPMENT WERE PREPARED. ALSO, THREE CONTRACTS WERE AWARDED.	125.0		92.5	SEP 81	APR 81
M 79 6350 2419	OBJECTIVE TECH + INSTR FOR INSPECT OF IR COMPONENTS INVESTIGATION OF VARIOUS OPTICAL & MODULATION TRANSFER FUNCTION MEASURING SYSTEM HAS BEEN COMPLETED.	60.0		60.0	DEC 81	FEB 80
M 79 6350 2420	CALIBRATION FOR OPTICAL SCRATCH/DIG STDS FOR FIRE CONT INVESTIGATION OF VARIOUS OPTICAL INSTR & VISUAL SENSING SYSTEMS HAS BEEN COMPLETED. BREADBOARD SYSTEMS HAVE BEEN BUILT IN-HOUSE & TESTED. DATA HAS BEEN COLLECTED FOR PARAMETRIC INCLUSION INTO A SCOPE OF WORK.	60.0		60.0	DEC 80	MAR 80
M 79 6350 2422	INSPECT/MEAS METHOD FOR SPHERICAL SURFACED COMPONENTS RELEASED THE RFQ. HELD A PRE-PROPOSAL CONFERENCE. FORMALLY RESPONDED TO THE PRE-PROPOSAL CONFERENCE QUESTIONS.	110.0		49.2	MAR 81	FEB 81
M 79 6350 2423	KNURL INSPECTION ON 155 MM M549 RAP DESIGN & FAB OF MECH & OPTICAL COMP ARE 95% COMPLETE. THE ELEC DESIGN IS 90% COMPLETE. THE ELEC FAB IS 75% COMPLETE.	93.0		57.0		FEB 81
M 79 6350 2424	AUTOMATIC GEAR TOOTH CONTOUR INSPECTION SYSTEM THE RFP WAS ISSUED ON 1 JULY 1980 AND CLOSED 15 OCTOBER 1980. THE PROPOSAL EVALUATION IS IN PROCESS. THE CONTRACT IS SCHEDULED TO BE AWARDED IN THE SECOND QUARTER FY81.	98.0			MAY 81	DEC 81
M 79 6350 2425	OPTICAL TESTING OF FAR INFRARED MATERIALS INTERFEROMETRY MEAS HAVE BEEN COMPLETED ON THE GERMANIUM BLANKS. THE ORIEL MONOCHROMATOR WAS RECEIVED. THE PRECISION ROTARY TABLE IS SCHEDULED TO BE DELIVERED IN APRIL 1981.	85.0		77.0	SEP 80	SEP 81

MANUFACTURING METHODS AND TECHNOLOGY PROGRAM
S U M M A R Y P R O J E C T S T A T U S R E P O R T
2ND SEMIANNUAL SUBMISSION CY 80 RCS DRCMT-301

PROJ NO.	TITLE + STATUS	AUTHO-RIZED ($000)	CONTRACT VALUES ($000)	EXPENDED LABOR AND MATERIAL ($000)	ORIGINAL PROJECTED COMPLETE DATE	PRESENT PROJECTED COMPLETE DATE
M 79 6350 2426	CRYOGENIC COOLER HELIUM LEAK RATE TEST SET THE CONTRACT WAS AWARDED 17 JUL 1980. NO PROBLEMS HAVE OCCURED TO DATE AND WORK IS PROGRESSING AHEAD OF SCHEDULE. A TEST PLAN IS BEING DEVELOPED & A DESIGN REVIEW FOR THE TEST SET WAS COMPLETED IN DEC 1980.	120.0		40.0	DEC 80	MAY 81
M 79 6350 2428	TWO CHANNEL TELEMETER FOR 3-INCH SPIN AIR GUN THIS TASK WAS COMPLETED. THE TELEMETER PROJECTILE WAS SUCCESSFULLY BENCH-TESTED. THE DRAFT OF THE FINAL REPORT WAS COMPLETED AND IS IN THE PROCESS OF BEING REVIEWED.	60.0		60.0	MAY 80	DEC 80
M 79 6350 2430	ACCEPT TESTER FOR COMMON MODULE SCANNER PERFORMANCE THE SCAN MIRROR INTERFERENCE PATTERN ANALYZER IS PROGRESSING SATISFACTORILY. THE FINAL DESIGN REVIEW WAS HELD 27 AUG 80. DESIGN + EVAL OF THE SYS USING ACTUAL MIRRORS IS CURRENTLY BEING PERFORMED.	100.0		98.7	SEP 80	MAR 81
M 79 6350 2433	POWER SUPPLY TEST CONSOLE FOR 2ND GEN IMAGE INTENSIFIE THE CONTRACT WAS AWARDED ON 31 JUL 80. A DETAIL STUDY OF THE POWER SUPPLY SPEC + TESTING REQ WAS COMPLETED. THE COMPUTER SYS HAS BEEN ORDERED AND IS SCHEDULED FOR DELIVERY IN MARCH 1981. THE COMPUTER SOFTWARE DESIGN EFFORT IS UNDERWAY.	198.0		14.5	FEB 80	SEP 81
M 79 6350 2436	ANALYTICAL CHEMICAL METHODS FOR MIL-C-14460 A METHOD WAS DEVELOPED FOR EXTRACTING 3NA.OHEDTA FROM THE FORMULATION INGREDIENTS WHICH WOULD INTERFERE WITH ITS TITRATION. A BUFFERING SYS TO ENHANCE TITRATION END-POINT REPEATABILITY WAS SELECTED.	20.0		14.6	FEB 80	JAN 81
M 79 6350 2438	HIGH PERF LIQUID CHROMATOGRAPHIC TEST OF AZIRIDINES PHASE I OF THIS TASK HAS BEEN COMPLETED. THIS PHASE INCLUDED THE IDENTIFICATION AND CALIBRATION OF SEPARATIED MATERIALS.	79.0		63.7	DEC 80	DEC 80
M 79 6350 2439	SPECS FOR COMPOSITE PROPELLANT BINDERS THE TASK HAS BEEN COMPLETED & THE FINAL REPORT IS BEING PREPARED.	55.0		53.9	JUN 80	NOV 80
M 79 6350 2444	ULTRASONIC TESTING OF ROADWHEELS EIGHTEEN ULTRASONICALLY INSP ROADWHEELS WERE RECEIVED AT APG. THE M60A1 TEST VEHICLE WAS DELIVERED TO APG. VEHICLE PERFORMANCE TESTING WAS CONDUCTED. THE DURABILITY TESTING IS SCHEDULED TO START IN EARLY NOV 1980.	55.0		5.0	SEP 80	JUL 81
M 79 6350 2446	BLACKLIGHT TV SYSTEM THE SCOPE-OF-WORK FOR INCLUSION IN THE WATERVLIET WHITE & BLACK LIGHT TV INSPECTION SYS HAS BEEN POSTPONED UNTIL JAN 81 TO ALLOW ACCEPTANCE OF EQUIP DEV ON ANOTHER MTT PROJECT, AUTOMATIC MAGNETIC RECORDING BORESCOPE.	30.0		2.7	AUG 80	APR 81

MANUFACTURING METHODS AND TECHNOLOGY PROGRAM
S U M M A R Y P R O J E C T S T A T U S R E P O R T
2ND SEMIANNUAL SUBMISSION CY 80 RCS DRCMT-301

PROJ NO.	TITLE + STATUS	AUTHO-RIZED ($000)	CONTRACT VALUES ($000)	EXPENDED LABOR AND MATERIAL ($000)	ORIGINAL PROJECTED COMPLETE DATE	PRESENT PROJECTED COMPLETE DATE
M 79 6350 2451	GUN TUBE ROUNDNESS MEASUREMENT A TECHNICAL PROPOSAL FOR THE ANCILLARY ELECTRONIC EQUIPMENT HAS BEEN REVIEWED AND FOUND ACCEPTABLE. BIDS ARE CURRENTLY BEING SOLICITED FOR THE MACHINING OF THE FIXTURES.	65.0		28.6	SEP 80	SEP 81
M 79 6350 2452	TILUM OF CANNON TUBE BORE SURFACES FOR VISUAL INSPECT THIS TASK WAS COMPLETED.	60.0		11.0	SEP 80	SEP 80
M 79 6350 2453	THICKNESS MEASUREMENT OF NON-MAGNETIC COATINGS TWO PROPOSALS WERE RECEIVED AND EVALUATED. A CONTRACT WAS AWARDED. THE DELIVERY DATE WAS EXTENDED 30 DAYS, FROM 180 TO 210 DAYS. THIS EXTENTION WAS REQUESTED BY THE CONTRACTOR.	80.0		34.0	DEC 80	SEP 81
M 79 6350 2454	IMPROVEMENT OF BORE EROSION GAGE THIS EFFORT WAS COMPLETED. MEASUREMENTS WERE MADE ON A 105MM M68 TUBE SECTION. BORE PROFILES WERE OBTAINED PRIOR TO AND AFTER EACH ELECTROPOLISHING STEP. THE THICKNESS OF THE MATL REMOVED CORRELATED WELL WITH AN ULTRASONIC PULSE THICKNESS MONITOR.	20.0		20.0	MAR 80	SEP 80
M 79 6350 2455	QUENCH CRACK DETECTION TECHNICAL PROPOSALS FOR THE DETECTION OF QUENCH CRACKS IN GUN TUBES WERE RECEIVED. ONLY THOSE PROPOSALS THAT RECOMMENDED EDDY CURRENT DETECTION WERE FOUND ACCEPTABLE. THE RFP FOR THE PURCHASE OF AN EDDY CURRENT HAS BEEN REQUESTED.	125.0		20.0	DEC 80	JUN 82
M 79 6350 2456	TEST SYSTEM FOR REAL TIME MECHANICAL WEAR ASSESSMENT THIS TASK WAS COMPLETED. A TECHNICAL REPORT IS BEING PREPARED AND IS SCHEDULED FOR SUBMISSION TO AMMRC IN APRIL 1981.	25.0		3.0	OCT 80	DEC 80
M 80 6350	MATERIALS TESTING TECHNOLOGY FOR PROJECT STATUS SEE SUBTASKS BELOW.	4,404.0	1,714.4	2,689.6	APR 83	OCT 82
M 80 6350 2014	PORTABLE NEUTRON RADIOGRAPHY SYS - ENGR MODEL THE FIELD EVALUATION SCHEDULE HAS BEEN FINALIZED. YUMA PROVING GROUND WAS SELECTED TO PERFORM THE EVALUATIONS. THE LOGISTIC PLANNING ASSOCIATED WITH THE EVALUATION HAS BEEN COMPLETED.	783.0	726.0			AUG 81
M 80 6350 2205	HOLOGRAPHIC INSPECTION OF ROTARY FORGED PREFORMS THE CONFIGURATION REQ FOR THE IMAGING SYSTEM HAVE BEEN DEVELOPED. THE SCOPE OF WORK WAS COMPLETED AND FORWARDED TO PROCUREMENT FOR REVIEW AND SOLICATATION.	105.0		4.2		DEC 81
M 80 6350 2235	WELD EVALUATION BY ACOUSTIC EMISSION TECHNIQUE THE CONTRACT WAS AWARDED IN SEPT 1980. INTRODUCTORY COORDINATION MEETING WAS HELD TO INFORM THE XM1 MFG PERSONNEL OF THE CAPABILITIES & POTENTIAL OF THE AEWM SYS, ALSO TO COORDINATE THE AEWM SYSTEM PRODUCTION LINE TEST DURING MAY/JUNE 81 TIME FRAME.	117.5		0.4		SEP 81

MANUFACTURING METHODS AND TECHNOLOGY PROGRAM
S U M M A R Y P R O J E C T S T A T U S R E P O R T
2ND SEMIANNUAL SUBMISSION CY 80 RCS DRCMT-301

PROJ NO.	TITLE + STATUS	AUTHO-RIZED ($000)	CONTRACT VALUES ($000)	EXPENDED LABOR AND MATERIAL ($000)	ORIGINAL PROJECTED COMPLETE DATE	PRESENT PROJECTED COMPLETE DATE
M 80 6350 2407	LIQUID CHROMATOGRAPHY FOR EPOXY RESIN FORMULATION TEST PROCEDURES WERE DESIGNED FOR THE QUANTITATIVE ANALYSIS OF EPOXY RESIN COMPONENTS IN SP 250 PREPREGS. LIQUID CHROMATOGRAPHIC PROCEDURES HAVE BEEN DEV TO FINGERPRINT THE CHEMICAL COMPOSITION AND TO IDENTIFY AND QUANTITATIVELY ANALYZE COMPONENTS.	55.0		46.0		MAR 81
M 80 6350 2408	CHEMICAL ANALYSIS OF SILICON NITRIDE ADDITIONAL DISKS WERE FAB TO TEST REPRODUCIBILITY OF THE PROCEDURE. DUPLICATE SPECIMENS WERE PREPARED FROM FIVE OF THE SAMPLES. THE HIGHEST DIFFERENCE IN INTENSITY WAS 5.5% WITH THE AVE BEING APPROX. 2.4%.	50.0		18.4		APR 81
M 80 6350 2409	EMISSION SPECTROGRAPH ANAL MARAGING STEEL PLASMA EXCITATION SIGNIFICANT IMPROVEMENT IN ACCURACY WAS ATTAINED USING SOLID EXCITATION SOURCE. THIS WAS ACCOMPLISHED BY REDUCING SPECTRAL INTERFERENCES. CALIBRATION CURVES WERE GOOD FOR ALL ELEMENTS EXCEPT CARBON AND SULFUR.	55.0		50.6		MAR 81
M 80 6350 2417	COPPER HEAD CRITICAL FLAW DETECT OF COMPLEX COMPONENTS PROPOSALS WERE RECEIVED AND REVIEWED. THE COSTS WERE NEGOTIATED AND A CONTRACT IS SCHEDULED TO BE AWARDED NOVEMBER 1980.	250.0		16.3		JAN 83
M 80 6350 2418	HALF LIFE OF TRITIUM LAMPS ALL THE NECESSARY TEST MEASUREMENT AND DATA MANAGEMENT EQUIPMENT HAS BEEN RECEIVED. ARRADCOM PERSONNEL ARE CURRENTLY UNDERGOING TRAINING IN THE USE & OPERATION OF THIS EQUIP.	60.0		20.3		APR 81
M 80 6350 2419	DEVELOPMENT OF INFRARED AND OPTICAL TESTS THE RFQS WERE ISSUED ON 23 JULY 1980 AND THE CONTRACT WAS AWARDED 7 NOV 80.	140.0		4.6		MAR 82
M 80 6350 2420	CALIBRATION FOR OPTICAL SCRATCH/DIG STDS FOR FIRE CONTROL SCOPE OF WORK WAS COMPLETED. A RFQ WAS ISSUED. THE CONTRACTOR PROPOSALS WERE RECEIVED 31 OCT 1980, AND ARE CURRENTLY BEING EVALUATED.	110.0		4.5		AUG 82
M 80 6350 2422	INSPECT/MEAS METHOD FOR SPHERICAL SURFACED COMPONENTS FUNDS JUST RELEASED. NO WORK ACCOMPLISHED.	150.0				DEC 81
M 80 6350 2436	ANALYTICAL CHEMICAL METHODS FOR MIL-C-14460 INVESTIGATIONS INDICATED THAT SODIUM GLUCONATE CAN BE DETERMINED AS A SILYL DERIVATIVE BY UTILIZATION OF GAS LIQUID CHROMATOGRAPHY. THIS METHOD APPEARS ADAPTABLE TO THE MIL-C-14460 COMPOSITION.	70.0		56.8		APR 81

MANUFACTURING METHODS AND TECHNOLOGY PROGRAM
S U M M A R Y P R O J E C T S T A T U S R E P O R T
2ND SEMIANNUAL SUBMISSION CY 80 RCS DRCMT-301

PROJ NO.	TITLE + STATUS	AUTHO-RIZED ($000)	CONTRACT VALUES ($000)	EXPENDED LABOR AND MATERIAL ($000)	ORIGINAL PROJECTED COMPLETE DATE	PRESENT PROJECTED COMPLETE DATE
M 80 6350 2445	ULTRASONIC TIRE INSPECTION ONLY 1.1% OF THE OBER-RAMSTADT INSPECTED TIRES WITH LOW TDM READINGS WERE FIELDED AS COMPARED TO 11.4 PERCENT OF THE TIRES INSPECTED AT RRAD. TO TRY TO RESOLVE THIS ANOMALY, A TIRE PRESHOP INSP EVAL WILL BE SET UP & INITIATED.	85.0		6.4		MAR 81
M 80 6350 2450	GUN STEEL ADHESION CHROMIUM COATING MEASUREMENT SPIN TEST SAMPLES HAVE BEEN MADE TO FACILITATE THE COLLECTION OF DATA NEEDED TO FORMULATE STD PROCEDURES FOR THE MEAS OF ADHESIVE STRENGTHS OF COATING WITH GUN STEEL. GUN STEEL + SUPERALLOY MATL HAVE BEEN PROCURED, MACHINED INTO RODS + PLATES.	23.9		4.5		FEB 81
M 80 6350 2603	PROVIDE AUTO SPHERICITY INTERFEROMETER F/TEST LENS SURFACES A CONTRACT WAS AWARDED 30 SEPT 80. A VISIT WAS MADE TO THE CONTRACTORS PLANT TO EVALUATE AND TEST THE DELIVERABLE ITEMS OF THIS CONTRACT. ALL OF THESE ITEMS FUNCTIONED PROPERLY. FUTURE ENHANCEMENTS OF THE IN TERFEROMETER SYSTEM WERE DISCUSSED.	181.0		23.7	APR 82	MAR 82
M 80 6350 2604	NEW COMPATIBILITY TEST METHOD FOR EXPLOSIVE SYSTEMS STUDY OF TEST TEMPERATURES HAS BEEN CONDUCTED AS SCHEDULED. BOTH 90 DEGREE C & 100 DEGREE C WERE EXPLORED. IT WAS CONCLUDED THAT THE 90 DEGREE C WAS THE OPTIMUM TEMP FOR THIS TEST.	50.0		50.0	SEP 81	SEP 81
M 80 6350 2613	INFLOW AIR BLEED TEST, LTS-712 ENGINE THE IN-FLOW BLEED TEST PLAN & STATEMENT OF WORK & FUNDING REQ WERE REVIEWED. A FACILITIES AUDIT OF THE TEST CELL WAS COMPLETED. A WORK-ORDER WAS ISSUED TO UP GRADE THE TEST CELL TO ACCOMMODATE THE TEST ASSOCIATED WITH THIS EFFORT.	267.0		21.0		JAN 82
M 80 6350 2614	TEMP. COMPENSATED VOLTAGE CONT CRYSTAL OSCILLATOR TEST METH. THE PROCUREMENT DATA PACKAGE HAS BEEN PREPARED TO INITIATE A REQUEST FOR PROPOSAL.	75.0				FEB 82
M 80 6350 2616	AUTOMATED SOFTWARE AIDS FOR TESTING REQUIREMENTS THE PROCUREMENT PACKAGE WAS COMPLETED AND THE CONTRACT AWARDED. TWO DESIGN REVIEWS WERE CONDUCTED TO ESTABLISH REQ FOR AUTOMATED TOOLS TO EXAMINE MOD TO THE ICBL SYS.	150.0	98.9			JUN 81
M 80 6350 2621	THERMOELECTRIC MATERIALS TEST THE CONTRACT WAS AWARDED 10 SEPT 1980 AND THE WORK IS PROCEEDING AS PLANNED. TEST PROCEDURES HAVE BEEN DEVELOPED AND WORK ON SOFTWARE HAS BEEN INITIATED.	95.0		19.0	JUL 81	JUN 81
M 80 6350 2623	NDT MEAS OF GOLD PLATING THICKNESS ON SMALL CYL COMP WIRES PRELIMINARY ENGINEERING HAS BEEN COMPLETED. SOME STDS HAVE BEEN RECEIVED AND VERIFICATION IS UNDERWAY. PROCUREMENT OF MATL IS TAKING LONGER THAN EXPECTED. THIS WILL DELAY THE COMPLETION OF THE EFFORT.	117.0				SEP 81

MANUFACTURING METHODS AND TECHNOLOGY PROGRAM
S U M M A R Y P R O J E C T S T A T U S R E P O R T
2ND SEMIANNUAL SUBMISSION CY 80 RCS DRCMT-301

PROJ NO.	TITLE + STATUS	AUTHORIZED ($000)	CONTRACT VALUES ($000)	EXPENDED LABOR AND MATERIAL ($000)	ORIGINAL PROJECTED COMPLETE DATE	PRESENT PROJECTED COMPLETE DATE
M 80 6350 2624	AUTO ANALYSIS OF PCB PLATING SOLUTION STRENGTH THE COMPONENTS FOR THE PROTOTYPE ANALYTIC DEVICE HAVE BEEN OBTAINED. THE DEVICE HAS BEEN ASSEMBLED AND TESTED. THE RESULTS HAVE BEEN SATISFACTORY, BUT MORE REFINEMENTS ARE REQ FOR SMOOTHER & FASTER OPERATION.	75.0				MAY 81
M 80 6350 2625	HYBRID CIR CHIP SEMICONDUCTOR ELEC TEST + SCREEN PROCEDURE THE SCOPE OF WORK AND CONTRACT REQUIREMENTS HAVE BEEN COMPLETED. ALSO, THE PRELIMINARY EVALUATION OF THE R&D CHIPS HAS STARTED.	85.0		8.0		JUL 81
M 80 6350 2626	DETERMINATION OF LOW LEVEL CONCENTRATION OF LEAD IN PAINT PAINT FORMULATIONS WERE PREPARED HAVING A RANGE FROM BLANK TO 0.06% LEAD BASED ON TOTAL PAINT. THE PAINT SAMPLES WERE ANALYZED TO VERIFY THEIR LEAD CONTENT. ALSO, THE ANALYTICAL PARAMETERS OF THE ATOM COUNTER SPECTROMETER WERE SELECTED.	56.0		17.2	SEP 81	SEP 81
M 80 6350 2627	INFRARED SPECTROSCOPY ANALYSIS OF NON-VOLATILE VEHICLES THE QUALITATIVE IDENTIFICATION OF THE PLASTICIZER, BUTYL BENZYL PHTHALATE, REQ IN THESE SPECIFICATIONS HAS BEEN COMPLETED.	20.0		14.7	APR 81	APR 81
M 80 6350 2628	STANDARD CONTAMINANT FOR TEST FUELS THE SCOPE OF WORK HAS BEEN DEVELOPED. A LITERATURE SEARCH IS CONTINUING.	30.4		1.2	AUG 81	SEP 81
M 80 6350 2629	IN-PROCESS DIM INSP ROTARY FORGED CANNON TUBES THE SYSTEM CONCEPT HAS BEEN DEVELOPED. THE PURCHASE DESCRIPTION HAS BEEN PREPARED.	79.0		9.3		SEP 82
M 80 6350 2630	CRITICAL ULTRASONIC INSPECTION PROBLEMS WITHIN THE ARMY THIS EFFORT HAS MULTI-TASKS. THESE TASKS ARE-TRANSDUCER EVALUATION, SYS ASSEMBLY & TEST, SHELL BODY ACQUISITION & INSTRUMENTATION MOD. THE MTMIS DOES NOT HAVE THE CAPABILITY TO REPORT ON SUB-SUBTASKS.	195.0		98.0	JAN 81	SEP 81
M 80 6350 2631	CRITICAL ELECTROMAGNETIC INSP PROBLEMS WITHIN THE ARMY THIS EFFORT HAS MULTI-TASKS. THESE TASKS ARE-CARBURIZED GEAR CASE DEPTH, RESIDUAL & NEAR SURFACE STRESSES, MULTIFREQUENCY EDDY CURRENT INSPECTION TECHNIQUES. THE MTMIS DOES NOT MAINTAIN DATA ON SUB-TASKS.	100.0		39.0		MAR 81
M 80 6350 2639	ROADWHEEL SEAL TEST MACHINE VARIOUS DESIGN CONCEPTS ARE PRESENTLY BEING CONSIDERED. ALSO, THE MACHINE PERFORMANCE OBJECTIVES AND CAPABILITIES ARE BEING ESTABLISHED.	140.0		4.9	JUN 82	DEC 82

MANUFACTURING METHODS AND TECHNOLOGY PROGRAM
S U M M A R Y P R O J E C T S T A T U S R E P O R T
2ND SEMIANNUAL SUBMISSION CY 80 RCS DRCMT-301

PROJ NO.	TITLE + STATUS	AUTHO-RIZED ($000)	CONTRACT VALUES ($000)	EXPENDED LABOR AND MATERIAL ($000)	ORIGINAL PROJECTED COMPLETE DATE	PRESENT PROJECTED COMPLETE DATE
M 80 6350 2640	TRACK TEST MACHINE CURRENTLY FOUR ALTERNATIVE DESIGN CONCEPTS ARE BEING EVALUATED FOR TESTING TRACK BLOCKS.	275.0		4.5	SEP 82	APR 83
M 80 6350 2641	MECHANICALLY INDUCED CRACKS FOR NDT STANDARDS RECENT EFFORTS HAVE BEEN DIRECTED AT PRODUCING A SLOT INTO THE SIDE SURFACE OF THE PLATE. THE SLOT SURFACE IS PARALLEL TO THE ROLLING PLANE. THIS APPEARS TO BE A MORE DIRECT METHOD OF CLOSING SLOTS.	60.0		14.9	OCT 81	OCT 81
M 80 6350 2642	ADVANCED PENETRATING RADIATION TECH F/PRODUCT EVALUATION A NUMBER OF FORMER MTT TASKS HAVE BEEN COMBINED TO FORM THIS EFFORT. THESE TASKS ARE HIGH-RESOLUTION RADIOGRAPHY, NEUTRON RADIOGRAPHY, RADIOMETRY, RADIOGRAPHIC QUALIFICATION. THE MTMIS DOES NOT MAINTAIN DATA ON SUB-SUBTASKS.	180.0		70.0	SEP 80	SEP 81
M 79 6390	PROGRAM IMPLEMENTATION AND INFORMATION TRANSFER CONTRACT IS COMPLETE. FINAL REPORT HAS BEEN ACCEPTED. MT TECH NOTES HAVE BEEN PREPARED FOR THE REPORTING PERIOD.	262.9	204.3	19.7	JUN 80	MAR 81
M 80 6390	MMT PROGRAM IMPLEMENTATION AND INFORMATION TRANSFER MANTECH JOURNAL BEING PUBLISHED. NTIS NOTES BEING PREPARED. CAD/CAM FOR DIE MAKING REPORT PUBLISHED.	250.0	235.6	4.0	MAR 81	MAR 81
M 81 6390	MMT PROGRAM IMPLEMENTATION AND INFORMATION TRANSFER NEW PROJECT. NO FUNDS OBLIGATED. FULL AMOUNT OF FUNDS NOT YET RECEIVED.	90.0			MAR 82	MAR 82

MANUFACTURING METHODS AND TECHNOLOGY PROGRAM
S U M M A R Y P R O J E C T S T A T U S R E P O R T
2ND SEMIANNUAL SUBMISSION CY 80 RCS DRCMT-301

PROJ NO.	TITLE + STATUS	AUTHO-RIZED ($000)	CONTRACT VALUES ($000)	EXPENDED LABOR AND MATERIAL ($000)	ORIGINAL PROJECTED COMPLETE DATE	PRESENT PROJECTED COMPLETE DATE
G 80 0001	VOICE CONTROLLED PROGRAMMING OF COMPUTERS THE FEASIBILITY OF INTERFACING TOBYHANNA ARMY DEPOT NC TAPE PUNCH AND INTERACTIVE GRAPHICS SYSTEM WITH VOICE RECOGNITION DEVICES HAS BEEN PROVEN. WORK WAS INITIATED ON GENERAL SYSTEMS SPECIFICATIONS OF A VOICE CONTROL SYSTEM.	92.0	9.7		NOV 81	NOV 81

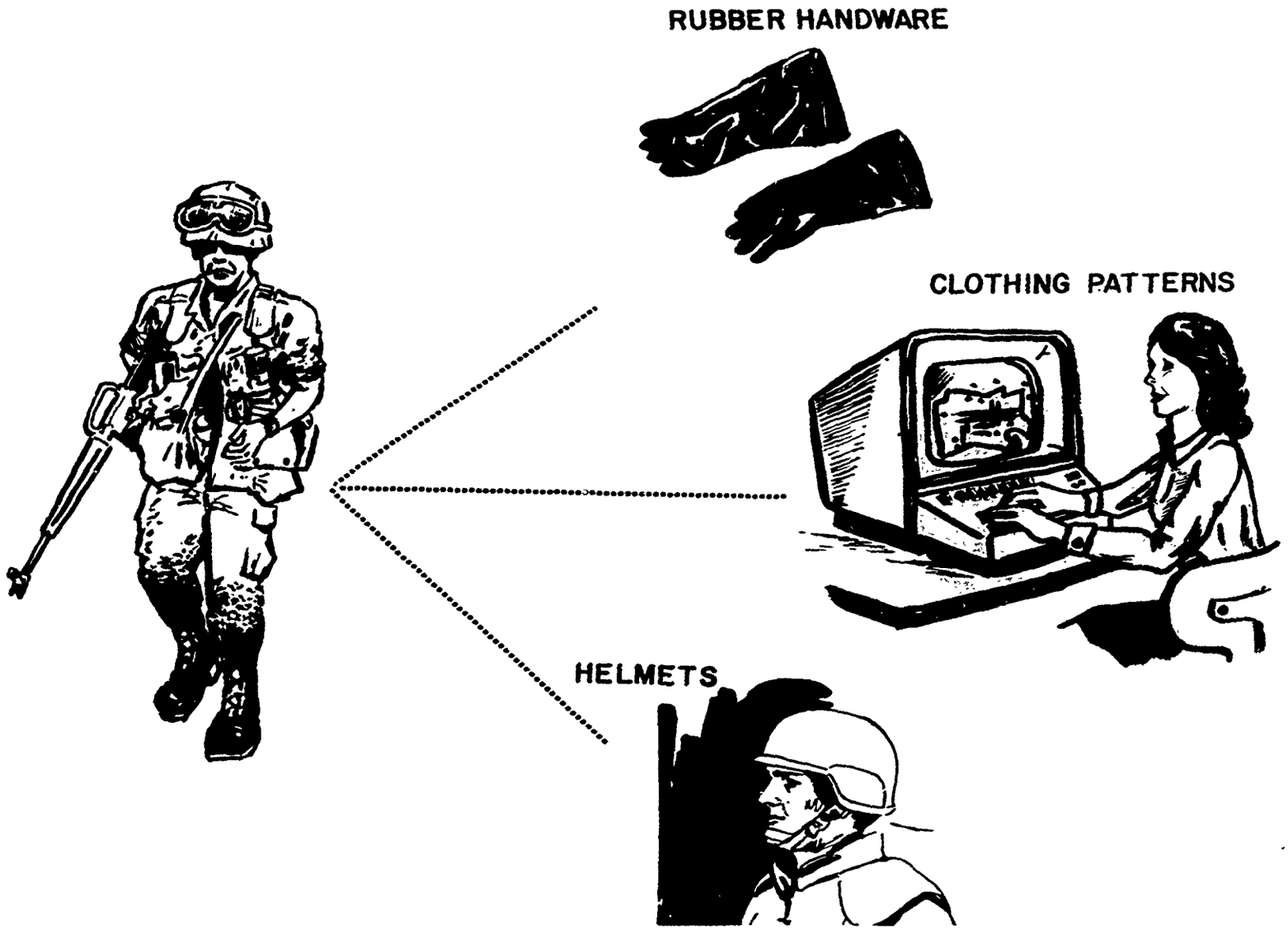

NATICK R&D COMMAND
(NARADCOM)

PRECEDING PAGE BLANK-NOT FILMED

NATICK RESEARCH AND DEVELOPMENT COMMAND

CURRENT FUNDING STATUS, 2ND CY80

FISCAL YEAR	NO. OF PROJECTS	AUTHORIZED FUNDS ($)	CONTRACT FUNDING ALLOCATED ($)	CONTRACT FUNDING EXPENDED ($)		INHOUSE FUNDING REMAINING ($)	INHOUSE FUNDING EXPENDED ($)	
77	1	255,500	160,900	156,100	(97%)	92,600	56,600	(61%)
78	0	0	0	0	(0%)	0	0	(0%)
79	1	297,700	297,700	174,100	(58%)	0	0	(0%)
80	2	85,900	31,000	0	(0%)	54,900	7,400	(13%)
81	0	0	0	0	(0%)	0	0	(0%)
82	0	0	0	0	(0%)	0	0	(0%)
TOTAL	4	637,100	489,600	330,200	(67%)	147,500	64,000	(43%)

AUTHORIZED FUNDING CONTRACT ALLOCATED 77% INHOUSE REMAINING 23%

MANUFACTURING METHODS AND TECHNOLOGY PROGRAM
S U M M A R Y P R O J E C T S T A T U S R E P O R T
2ND SEMIANNUAL SUBMISSION CY 80 RCS DRCMT-301

PROJ NO.	TITLE + STATUS	AUTHO-RIZED ($000)	CONTRACT VALUES ($000)	EXPENDED LABOR AND MATERIAL ($000)	ORIGINAL PROJECTED COMPLETE DATE	PRESENT PROJECTED COMPLETE DATE
Q 77 8053	CADAM OF PARACHUTE HARDWARE SOFTWARE FOR THE EDGER, FLATTENER, BLOCKER, AND FINISH DIE CAVITIES HAVE BEEN COMPLETED. COMPUTER SOFTWARE FOR NLABS UNIVAC 1106 COMPUTER HAS BEEN DELIVERED. THE FINAL REPORT IS ALMOST COMPLETE	253.5	160.9	56.6	MAR 78	SEP 81
Q 80 8063	IMPROVED METHODS OF MFG OF BUTYL RUBBER HANDWEAR ALL AGENT TESTING WAS HALTED BY THE DARCOM SAFETY OFFICE UNTIL NEW REGULATIONS ARE INSTITUTED. AS A RESULT, THE CONTRACT HAS BEEN AMENDED TO ALLOW FOR THE DELAY.	47.5				JUN 82
Q 79 8066	CONTINUOUS FILAMENT HELMET PREFORM IN ORDER TO COMPARE CONTINUOUS YARN PASGT HELMETS WITH THE ORIGINAL FABRIC HELMETS ON AN EQUAL KEVLAR WEIGHT BASIS, THE CONTRACT WITH BRUNSWICK WAS CHANGED TO SPECIFY THE WEIGHT OF THE MOLDED SHELL RATHER THAN FINISHED WEIGHT WITH COMPONENTS INSTALLE	297.7	297.7		MAR 81	SEP 81
Q 80 8066	CONTINUOUS FILAMENT HELMET PREFORM THE CONTRACT WITH BRUNSWICK HAS BEEN EXTENDED 90 DAYS TO 30 MARCH 1981.	38.4	31.0	7.4		SEP 81

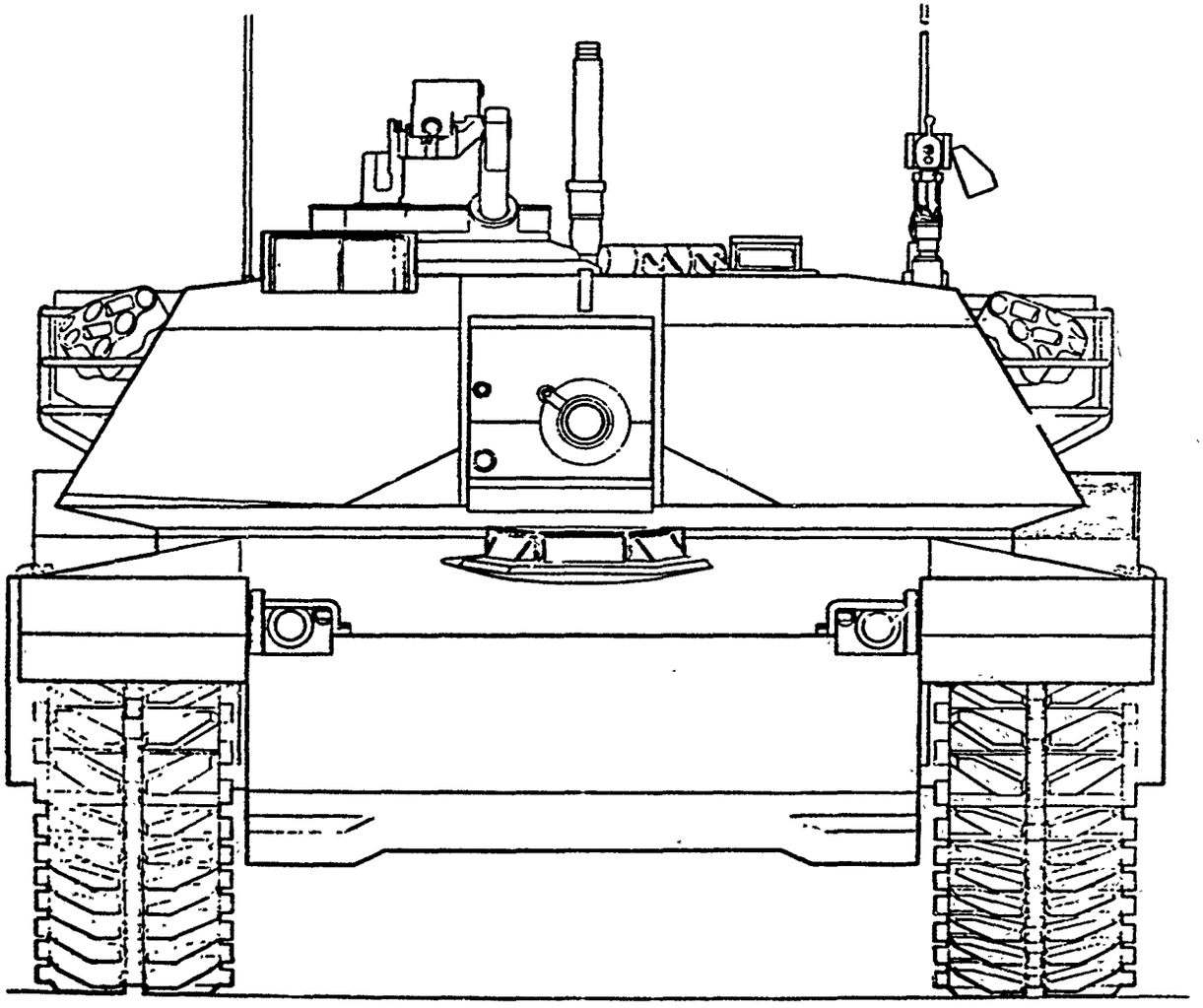

TANK-AUTOMOTIVE COMMAND
(TACOM)

PRECEDING PAGE BLANK-NOT FILMED

TANK-AUTOMOTIVE COMMAND

CURRENT FUNDING STATUS, 2ND CY80

FISCAL YEAR	NO. OF PROJECTS	AUTHORIZED FUNDS ($)	CONTRACT FUNDING ALLOCATED ($)	CONTRACT FUNDING EXPENDED ($)		INHOUSE FUNDING REMAINING ($)	INHOUSE FUNDING EXPENDED ($)	
7T	1	500,000	356,600	302,400	(84%)	143,400	26,600	(18%)
77	0	0	0	0	(0%)	0	0	(0%)
78	5	3,392,000	2,569,300	1,927,400	(75%)	822,700	525,300	(63%)
79	10	3,670,400	2,063,300	969,200	(46%)	1,607,100	523,000	(32%)
80	11	3,130,000	2,679,700	877,^00	(32%)	450,300	151,000	(33%)
81	12	4,852,000	0	0	(0%)	4,852,000	0	(0%)
82	0	0	0	0	(0%)	0	0	(0%)
TOTAL	39	15,544,400	7,668,900	4,076,200	(53%)	7,875,500	1,225,900	(15%)

AUTHORIZED FUNDING CONTRACT ALLOCATED 49% INHOUSE REMAINING 50%

MANUFACTURING METHODS AND TECHNOLOGY PROGRAM
S U M M A R Y P R O J E C T S T A T U S R E P O R T
2ND SEMIANNUAL SUBMISSION CY 80 RCS DRCMT-301

PROJ NO.	TITLE + STATUS	AUTHO-RIZED ($000)	CONTRACT VALUES ($000)	EXPENDED LABOR AND MATERIAL ($000)	ORIGINAL PROJECTED COMPLETE DATE	PRESENT PROJECTED COMPLETE DATE
T 78 4264	TRACK INSERTS AND FILLERS FOR TRACK RUBBER PADS DESIGN HAS BEEN COMPLETED. COMPONENTS PURCHASED AND DELIVERED. FINAL FABRICATION OF RUBBER FATIGUE TEST MACHINE BEGUN. COMPLETION EXPECTED FOR SEPT., 1981.	520.0	233.8	149.0	JAN 81	SEP 81
T 80 4392	JOINING DISSIMILAR METALS PROCEDURES FOR WELDING TRANSITION MATERIALS WERE APPLIED TO FULL-SIZED BALLISTIC TEST SAMPLES. TEST SPECIMENS HAVE BEEN SENT TO APG FOR BALLISTIC FIRING TO DETERMINE JOINT INTEGRITY.	23.0		20.0	MAY 81	MAY 81
4 7T 4568	TECH DATA/CONFIGURATION MANAGEMENT SYSTEM (TD/CMS) ***** DELINQUENT STATUS REPORT *****	500.0	356.6	26.6	JUN 79	JUN 81
T 79 4575	LASER WELDING TECHNIQUES FOR MILITARY VEHICLES THE PROCESS HAS BEEN REFINED SO REPEATABLE SOUND WELDS CAN BE MADE. PROCESS OPTIMIZATION IS UNDERWAY TO ELIMINATE POROSITY IN THE WELD. AN AUTOMATION CONCEPT STUDY IS BEING PERFORMED AND EQUIP TO WELD SECTION MOCK-UPS IS BEING PREPARED.	375.0	280.0	31.0	JUL 81	MAY 82
T 79 4586	IMPROVED LARGE ARMOR STEEL CASTINGS- PHASE 1 FLAT PLATES FROM TWO CONTRACTORS HAVE BEEN EVALUATED BALLISTICALLY AND FOUND TO EXCEED THE ACCEPTANCE REQUIREMENTS FOR ROLLED HOMOGENEOUS ARMOR.	1,082.0	522.7	108.4	OCT 80	JUL 81
T 79 5002	FABRICATING TORSION SPRINGS FROM HIGH STRENGTH STEELS ANALYSIS AND SELECTION OF OPTIMUM STEEL IS UNDERWAY. PROGRAM IS ON SCHEDULE AND WITHIN COST.	150.0	89.2	31.0	FEB 81	MAR 82
T 78 5014	IMPROVED FOUNDRY CASTINGS UTILIZING CAM MOLDS WERE BEING DESIGNED UTILIZING THE COMPUTER PROGRAM DEVELOPED DURING PHASE I.	415.0	1[illegible]5.5	[illegible].5	JAN 81	MAY 82
T 81 5014	IMPROVED FOUNDRY CASTINGS UTILIZING CAM THIS PROJECT WAS JUST FUNDED. NO STATUS REPORT IS REQUIRED.	50.0				
T 80 5019	STORAGE BATTERY, LOW MAINTENANCE-PHASE III BATTERY REQUIREMENT AND BASIC DESIGN OF STORAGE BATTERY HAS BEEN ESTABLISHED. PREPARATION OF RFP HAS BEEN COMPLETED. CONTRACT WILL BE AWARDED FROM FY81 FUNDING.	30.0		22.0	DEC 82	SEP 81
T 79 5024	GEAR DESIGN MFG UTILIZING COMPUTER TECHNOLOGY, CAM-PH2 ELASTIC DIE DEFLECTIONS AND BULK SHRINKAGE DUE TO TEMPERATURE DIFFERENTIALS HAVE BEEN CALCULATED. SPECIFICATIONS FOR THE MACHINING OF THE ELECTRODES ARE BEING GENERATED- FINITE ELEMENT ANALYSIS TO OBTAIN LOAD TRANSMISSION DATA IS PROGRESSING.	345.0	274.4	39.6	JUN 80	OCT 81

MANUFACTURING METHODS AND TECHNOLOGY PROGRAM
S U M M A R Y P R O J E C T S T A T U S R E P O R T
2ND SEMIANNUAL SUBMISSION CY 80 RCS DRCMT-301

PROJ NO.	TITLE + STATUS	AUTHO-RIZED ($000)	CONTRACT VALUES ($000)	EXPENDED LABOR AND MATERIAL ($000)	ORIGINAL PROJECTED COMPLETE DATE	PRESENT PROJECTED COMPLETE DATE
T 80 5045	SPALL SUPPRESSIVE ARMOR FOR COMBAT VEHICLES (PHASE II) MEHTODS OF ATTACHING KEVLAR SPALL LINER MATERIAL TO THE INTERIOR OF A COMBAT VEHICLE WAS DEVELOPED. ONE SET OF ARMOR HAS BEEN SUCCESSFULLY ATTACHED TO THE INTERIOR OF A FACILITY TEST VEHICLE, A M113A1 APC.	86.0	56.0	17.0	NOV 81	OCT 82
T 81 5054	LASER SURFACE HARDENED COMBAT VEHICLE COMPONENTS THIS PROJECT WAS JUST FUNDED. NO STATUS REPORT IS REQUIRED.	175.0				
T 80 5062	ARMORED VEHICLE VISION BLOCKS TACOM CAST A STEEL FIXTURE FOR HOLDING A GLASS/PLASTIC VISION BLOCK WHILE IT IS BEING BALLISTICALLY TESTED. AMMRC EARLIER MADE COMPOSITE VISION BLOCKS ON ANOTHER PROJECT. GLASS/PLASTIC BLOCKS ARE LESS BULKY THAN ALL-GLASS BLOCKS.	20.0		7.0	MAY 81	MAY 81
T 79 5064	LIGHT WEIGHT SADDLE TANK-PHASE 2 2.5-TON TANK TESTING CANCELLED. 5-TON FUEL TANK TESTING AT COLD REGION AND TROPIC TEST SITES WITHOUT FAILURE. TESTING CONTINUES AT YPG. TANKS DISTORTED DUE TO LACK OF RIBS AND TYPE OF PLASTIC MATERIAL. TANKS REMAINS SERVICEABLE AND NO LEAKS IF BONDED	196.8	1.0	63.0	FEB 81	SEP 82
T 79 5067	PLASTIC BATTERY BOX CONTRACT HAS BEEN AWARDED. HARDWARE IS BEING SHIPPED FOR MOLD PATTERN TOOLING. ROTOCAST HAS INITIATED THE PRELIMINARY DESIGN FOR ATTACHING TO VEHICLE. PROJECT IS ON SCHEDULE.	156.6	97.0	39.0	OCT 79	JUN 81
T 80 5067	PLASTIC BATTERY BOX (PHASE II) WORK IS CONTINUING FOR TEST PROCEDURES AND SCHEDULES OF TEST SITES.	15.0		12.0	DEC 80	DEC 81
T 80 5068	NEW ANTI-CORROSIVE MATERIALS AND TECHNIQUES (PHASE 1) AN RFP HAS BEEN FINALIZED AND FORWARDED FOR PROCUREMENT ACTION.	30.0		19.0	FEB 82	MAY 82
T 81 5068	NEW ANTI-CORROSIVE MATERIALS AND TECHNIQUES (PHASE II) THIS PROJECT WAS JUST FUNDED. NO STATUS REPORT IS REQUIRED.	300.0				
T 81 5075	MILITARY ELASTOMERS FOR TRACK VEHICLES (PHASE II) THIS PROJECT WAS JUST FUNDED. NO STATUS REPORT IS REQUIRED.	200.0				
T 80 5082	FLEXIBLE MACHINING SYSTEM, PILOT LINE FOR TCV COMPONENTS THIS PROJECT (PHASE II) IS CONTINUING THE ACTIVITIES INITIATED IN PHASE I TOWARDS PROVIDING GUIDANCE AND SOFTWARE SUPPORT IS SELECTING AND OPERATING FMS. THE CONTRACTOR IS WORKING WITH HUGHES AIRCRAFT, AVCO LYCOMING, G.E. PITTSFIELD, AND ROCK ISLAND.	857.0	813.3	38.0	JAN 81	JUN 81

MANUFACTURING METHODS AND TECHNOLOGY PROGRAM
S U M M A R Y P R O J E C T S T A T U S R E P O R T
2ND SEMIANNUAL SUBMISSION CY 80 RCS DRCMT-301

PROJ NO.	TITLE + STATUS	AUTHO-RIZED ($000)	CONTRACT VALUES ($000)	EXPENDED LABOR AND MATERIAL ($000)	ORIGINAL PROJECTED COMPLETE DATE	PRESENT PROJECTED COMPLETE DATE
T 81 5082	FLEXIBLE MACHINING SYS (FMS) PILOT LINE F/TCV COMPONENTS THIS PROJECT WAS JUST FUNDED. NO STATUS REPORT IS REQUIRED.	880.0				
T 79 5083	UPSCALING OF ADVANCED POWDERED METALLURGY PROCESSES-PH 3 PROCUREMENT OF THE DIE SET IS IN PROGRESS. THE CAD PROGRAM MODIFICATION FOR THE DESIGN OF THE PREFORM IS UNDERWAY.	476.0	270.0	98.0	MAR 81	OCT 83
T 78 5085	PRODUCTION TECHNIQUES FOR FABRICATION OF TURBINE RECUPERATOR ONE SET OF PLATES, FABRICATED BY LASER, HAVE BEEN ASSEMBLED AND A SECOND SET ARE IN PROCESS OF BEING ASSEMBLED FOR THE ENGINE TEST. UPON SUCCESSFUL ENGINE TEST THE PROTOTYPE PRODUCTION SYSTEM WILL BE ORDERED	485.0	443.0	42.0	JAN 80	OCT 81
T 80 5085	TURBINE RECUPERATOR THIS FISCAL YEAR FUNDING SUPPLEMENTS THE PHASE 2 PROGRAM FUNDED IN FISCAL YEAR 1978 TO COVER COST GROWTH.	214.0		11.0	OCT 81	OCT 81
T 79 5090	IMPROVED AND COST EFFECTIVE MACHINING TECHNOLOGY SEE T 80 5090.	380.0	326.0	23.0	FEB 81	NOV 81
T 80 5090	IMPROVED AND COST EFFECTIVE MACHINING TECHNOLOGY (PHASE 2) OUTPUT FROM METCUT MACHINING OPERATIONS HAS BEEN FORWARDED TO CHRYSLER-LIMA.	229.0	229.4		NOV 81	NOV 81
T 81 5090	IMPROVED AND COST EFFECTIVE MACHINING TECHNOLOGY (PHASE III) THIS PROJECT WAS JUST FUNDED. NO STATUS REPORT IS REQUIRED.	290.0				
T 79 5094	ARMOR STEEL TREATED WITH RARE EARTH ADDITIONS A PROCUREMENT REQUEST HAS BEEN INITIATED IN RESPONSE TO AN UNSOLICITED PROPOSAL FROM BATTELLE. THE FIRST PHASE WILL ESTABLISH FEASIBILITY AND DEFINE APPROACH USED TO CONFIRM ARMOR IMPROVEMENT UNDER PRODUCTION MANUFACTURING METHODS.	48.0		25.0	SEP 80	OCT 81
T 78 5097	INTEGRALLY CAST LOW COST COMPRESSOR (PHASE II) FIRST STAGE TOOLING DESIGN HAS BEEN INITIATED AND THE FABRICATION IS IN PROGRESS. PROCESS VARIABLES AND PARAMETRIC STUDIES FOR OPTIMIZING THE CASTING PROCESS ON THE FIFTH STAGE IS IN PROGRESS.	342.0	267.0	75.0	JUN 80	SEP 81
T 81 5097	INTEGRALLY CAST LOW COST COMPRESSOR (PHASE III) THIS PROJECT WAS JUST FUNDED. NO STATUS REPORT IS REQUIRED.	50.0				
T 81 6011	SPRINGS FROM FIBER/PLASTIC COMPOSITES THIS PROJECT WAS JUST FUNDED. NO STATUS REPORT IS REQUIRED.	250.0				
T 78 6035	ESTABLISH ON-LINE NDT FOR TRACKED COMBAT VEHICLES(PHASE 1) THE ABILITY TO ACCURATELY DETERMINE TYPES OF LINEAR DISCONTINUITIES WITH A-SCAN TECHNIQUES IS OPERATOR DEPENDENT AND TIME CONSUMING. DATA RECOGNITION AND PATTERN RECOGNITION ANALYSIS HAS BEEN INITIATED USING A MICROPROCESSOR BASED PRODUCTION SYSTEM.	1,630.0	1,430.0	201.8	APR 81	JUN 81

MANUFACTURING METHODS AND TECHNOLOGY PROGRAM
S U M M A R Y P R O J E C T S T A T U S R E P O R T
2ND SEMIANNUAL SUBMISSION CY 80 RCS DRCMT-301

PROJ NO.	TITLE + STATUS	AUTHO-RIZED ($000)	CONTRACT VALUES ($000)	EXPENDED LABOR AND MATERIAL ($000)	ORIGINAL PROJECTED COMPLETE DATE	PRESENT PROJECTED COMPLETE DATE
T 79 6038	HIGH DEPOSITION WELDING ELECTRODES HAVE BEEN SELECTED. PROCESS PLANNING FOR CRUCIFORM TESTS WAS COMPLETED. PURCHASE REQUISITIONS HAVE BEEN SUBMITTED FOR EQUIPMENT.	459.0	203.0	65.0	JUL 80	JAN 82
T 81 6053	WELDING SYSTEMS INTEGRATION THIS PROJECT WAS JUST FUNDED. NO STATUS REPORT IS REQUIRED.	493.0				
T 81 6054	ADVANCED METROLOGY SYSTEMS INTEGRATION THIS PROJECT WAS JUST FUNDED. NO STATUS REPORT IS REQUIRED.	350.0				
T 80 6057	XM1 COMBAT VEHICLE CONTRACT AWARDED TO CHRYSLER 30 SEPTEMBER. CHRYSLER IS EVALUATING SUBCONTRACTORS FOR THE METROLOGY TASK.	1,088.0	1,058.0	2.0	OCT 82	OCT 82
T 81 6057	XM1 COMBAT VEHICLE THIS PROJECT WAS JUST FUNDED. NO STATUS REPORT IS REQUIRED.	1,567.0				
T 80 6059	LARGE CAST ALUMINUM COMPONENTS CAST A206 PLATES HAVE BEEN MADE FOR PRELIMINARY BALLISTIC TESTS. TURRET DESIGN CONTINUED.	538.0	523.0	3.0	JUL 81	NOV 82
T 81 6076	AUTOMATED DEPOT INSPECTION OF ROADWHEELS THIS PROJECT WAS JUST FUNDED. NO STATUS REPORT IS REQUIRED.	247.0				

APPENDICES

APPENDIX I: Command Identification

PRECEDING PAGE BLANK-NOT FILMED

APPENDIX: ARMY ACTION COMMAND/ACTIVITY IDENTIFICATION

Action Command	Acronym	Command Identifier
Test & Evaluation Command	TECOM	0
Aviation R&D Command	AVRADCOM	1
Communications & Electronics Command	CERCOM	2
Missile Command	MICOM	3
Armament Materiel Readinesss Command (Munitions)	ARRCOM (Ammo)	5
Armament R&D Command (Munitions)	ARRADCOM (Ammo)	8
Armament Materiel Readiness Command (Weapons)	ARRCOM (Wpns)	6
Armament R&D Command (Weapons)	ARRADCOM (Wpns)	9
Troop Support & Aviation Materiel Readiness Command	TSARCOM	7
Materiel Development & Readiness Command	DARCOM	D
Mobility Equipment R&D Command	MERADCOM	E
Communications R&D Command	CORADCOM	F
Depot Systems Command	DESCOM	G
Electronics R&D Command	ERADCOM	H
Army Materials and Mechanics Research Center	AMMRC	M
Natick R&D Command	NARADCOM	Q
Tank-Automtive Command	TACOM	T

NOTE: Abbreviation - R&D Research and Development

PRECEDING PAGE BLANK-NOT FILMED

APPENDIX II: Project Slippage Study

PRECEDING PAGE BLANK-NOT FILMED

PROJECT SLIPPAGE STUDY

The purpose of this study is to monitor trends in the timeliness of the MMT Project Execution. Figure 1 is a slippage profile for each command and for the program as a whole. An observation of this data shows that there has been very little change in the project slippage distribution when comparing the current period with the 2nd half CY79. The 5% increase in the "No Data" column is a reflection of the large number of projects which were approved late (i.e. after Nov) this fiscal year vs the number of projects approved late last fiscal year. Status reports are not required for projects just funded. Therefore, there is no scheduled completion date available for these projects causing them to fall into the "No Data" column. Also, 80 of these FY81 projects were not funded until after the 2nd CY80 reporting period (July-Decmeber 1980). Slippage data on these projects will not be available for another reporting period.

There are two problems that affect accurate project slippage reporting. One problem is delinquent status reports. If a status report is not submitted for a project, then the slippage will remain the same until the next status report is submitted. During the current reporting period there were 30 delinquent status reports. This is a decrease of eight reports from the previous period. A continued decrease in delinquency of project status reports will help improve the accuracy of the project slippage profile.

Another problem that affects accurate project slippage reporting is the basis on which final status reports are submitted. Some organizations await financial close-out before submitting final status reports. By doing this, several months might be added to the apparent duration of the project. Th general policy has been that final status reports should be submitted when the technical work has been physically completed. If outstanding financial action does not hinder project implementation, then the time required for financial close-out is not meant to be added to an indicator which measures engineering achievement. Continued emphasis on using a consistent basis for project close-out, namely technical completion, will provide a more accurate accounting of the technical life of MMT projects.

PROJECT SLIPPAGE STUDY

COMMAND	NO. ACTIVE PROJECTS*	PROJECT SLIPPAGE DISTRIBUTION (PERCENT)						
		NO DATA	0 MO	1-6 MO	7-12 MO	13-18 MO	19-24 MO	25+ MO
DARCOM	7	29	29				14	29
MERADCOM	17	12	35	12	12	12	12	6
CORADCOM	11	27	36	18				18
DESCOM	1		100					
ERADCOM	46	13	17	20	15	11	7	17
AMMRC	7	14	43		29	14		
NARADCOM	4	50		25				25
TACOM	39	31	15	8	15	15	10	5
TECOM	3	33		33			33	
AVRADCOM	72	42	18	8	4	10	13	6
MICOM	77	22	25	10	12	10	13	8
ARRADCOM-ARRCOM (AMMO)	176	18	19	13	14	9	10	18
ARRADCOM-ARRCOM (WPNS)	93	31	14	16	9	13	5	12
SUMMARY (DARCOM WIDE)	553	25	20	12	11	10	9	12
2ND CY79 SUMMARY	646	20	25	13	11	9	10	13

*FIGURES REFLECT DATA ON THE ACTIVE PROGRAM AS OF 12 MAR 81.

Figure 1 - Slippage Profile

APPENDIX III: User's Guide

PRECEDING PAGE BLANK-NOT FILMED

MANUFACTURING METHODS AND TECHNOLOGY PROGRAM
S U M M A R Y P R O J E C T S T A T U S R E P O R T
2ND SEMIANNUAL SUBMISSION CY 80 RCS DRCMT-301

PROJ NO.	TITLE + STATUS	AUTHO-RIZED ($000)	CONTRACT VALUES ($000)	EXPENDED LABOR AND MATERIAL ($000)	ORIGINAL PROJECTED COMPLETE DATE	PRESENT PROJECTED COMPLETE DATE
H 78 9889 A	THIRD GENERATION 0.9 MICRON WAFER INTENSIFIER TUBE (ITT) ITT HAS ITS 12-TUBE PROCESSING CHAMBER TESTED BUT IS WAITING FOR GOOD QUALITY GA-AS CATHODES. DELAY WAS CAUSED BY OTHER WORK PRIORITY AND 3RD GEN TECHNICAL PROBLEMS. REMAINING FUNDS WILL PROVIDE ONLY 12 TUBES. TWO SAMPLE TUBES WERE DELIVERED.	710.1	632.1	75.0	JUN 81	SEP 81
H 78 9889 B	THIRD GENERATION 0.9 MICRON WAFER INTENSIFIER TUBE (VARIAN) VARIAN EXHAUSTED ITS FUNDS AND CANNOT COMPLETE HARDWARE AND SOFTWARE REQUIREMENTS WITHOUT ADDITIONAL FUNDING. VARIAN REQUESTED $481K MORE. CONTRACT IS TO BE MODIFIED TO REQUIRE ONLY SOFTWARE. SAMPLES MADE IN MULTI-PROCESSOR MET SPECIFICATIONS.	1,060.0	980.0	70.0	JUN 81	OCT 81
H 80 9897	SURFACE ACOUSTIC WAVE RESONATOR + REFLECTIVE ARRAY DEVICES DRY ETCHING PROCESSES ARE BEING TESTED TO DETERMINE THE BEST FOR UNIFORMITY AND REPEATABILITY. ELECTRICAL DESIGNS FOR THE RESONATOR AND COMPRESSOR ARE NEARLY COMPLETED. SEVERAL CONFERENCES HAVE BEEN HELD WITH PROSPECTIVE SUPPLIERS OF PACKAGES.	596.4	569.4	1.5	AUG 82	OCT 82
(1)	(2) (3) (4)	(5)	(6)	(7)	(8)	(9)

THIS FORM IS USED FOR SUMMARIZING THE MMT PROGRAM PROJECTS' STATUS. USER'S GUIDE BELOW EXPLAINS THE SIGNIFICANCE OF EACH COLUMN HEREIN.

USER'S GUIDE
to
SUMMARY PROJECT STATUS REPORT

COLUMN 1. PROJECT NUMBER

A project identified by the first and last four digits which corresponds to the project title for the life of its execution. However, for accounting and reporting purposes, a project is recognized by the totality of its seven-digit numeral of alphanumeric number. Example:

3 75 6241

Project identifying number, which corresponds to the project title and is designated by action command.

Fiscal year of funding - the only two digits that may vary according to funding frequency (7T for FY transition).

Action command (see list in Appendix I).

COLUMN 2. Subtask identifier, if any.

COLUMN 3. PROJECT TITLE

The title descriptive of project effort.

COLUMN 4. An abstract of project status taken from the Project Status report. Whenever possible, technical accomplishments during the reporting period were summarized.

COLUMN 5. AUTHORIZED

The total amount of funds authorized in dollars, to complete the project.

COLUMN 6. CONTRACT VALUES

The portion of authorized funds actually expended or obligated for work performed by private industry.

COLUMN 7. EXPENDED LABOR AND MATERIAL

The portion of authorized funds actually expended in-house, namely within the Government.

COLUMN 8 ORIGINAL PROJECTED COMPLETION DATE

Calendar date clearly given in, or the nearest calendar month and year as could be read from the Milestone Chart of, the very first Project Status Report, RCS DRCMT-301.

COLUMN 9. PRESENT PROJECTED COMPLETION DATE

Calendar date clearly given in, or the nearest calendar month and year as could be read from Milestone Chart of, the latest Project Status Report, RCS DRCMT-301.

APPENDIX IV: Army MMT Program Representatives

PRECEDING PAGE BLANK-NOT FILMED

ARMY MMT PROGRAM REPRESENTATIVES

HQ,DARCOM
US Army Materiel Development and Readiness Command
ATTN: DRCMT
5001 Eisenhower Avenue — C: 202 274-8284/8298
Alexandria, VA 22333 — AV: 284-8284/8298

AVRADCOM
US Army Aviation R&D Command
ATTN: DRDAV-EGX, Mr. Dan Haugan
4300 Goodfellow Blvd. — C: 314 263-1625
St. Louis, MO 63120 — AV: 693-1625

CERCOM
US Army Communications & Electronics Materiel Readiness Command
ATTN: DRSEL-LE-R, Mr. William Coutros — C: 201 532-4035
Fort Monmouth, NJ 07703 — AV: 992-4035/4077

CORADCOM
US Army Communications R&D Command
ATTN: DRDCO-PPA-TP, Mr. Al Feddeler/Sam Esposito/Burton Resnic
Building 2700 — C: 201-535-2418/4926
Fort Monmouth, NJ 07703 — AV: 995-2418/4926/4026

ERADCOM
US Army Electronics R&D Command
ATTN: DELET-R, Mr. Joseph Key — C: 201 544-4258
Fort Monmouth, NJ 07703 — AV: 995-4258

MICOM
US Army Missile Command
ATTN: DRSMI-RST, Mr. Richard Kotler — C: 205 876-2065
Redstone Arsenal, AL 35809 — AV: 746-2065

TACOM
US Army Tank-Automotive Command — C: 313 573-2065/1814/2467
ATTN: DRSTA-RCKM, Dr. Jim Chevalier
Warren, MI 48090 — AV: 273-2065/1814/2467

ARRCOM
US Army Armament Materiel Readiness Command
ATTN: DRSAR-IRB, Mr. August Zahatko
Rock Island Arsenal — C: 309 794-4485/5446
Rock Island, IL 61299 — AV: 793-4485/5446

ARRADCOM
US Army Armament R&D Command
ATTN: DRDAR-PML, Mr. Donald J. Fischer — C: 201 328-2708
Dover, NJ 07801 — AV: 880-2708

PRECEDING PAGE BLANK-NOT FILMED

TSARCOM
US Army Troop Support and Aviation Materiel Readiness Command
ATTN: DRSTS-PLE, Mr. Don G. Doll
4300 Goodfellow Blvd. C: 314 263-3040
St. Louis, MO 63120 AV: 693-3040

MERADCOM
US Army Mobility Equipment R&D Command
ATTN: DRDME-UE, Mr. R. Goehner C: 703 664-4221
Fort Belvoir, VA 22060 AV: 354-4221

NARADCOM
US Army Natick R&D Command
ATTN: DRDNA-EZM, Mr. Frank Civilikas C: 617 653-1000, X2793
Natick, MA 01760 AV: 955-2349/2351

TECOM
US Army Test & Evaluation Command
ATTN: DRSTE-AD-M, Mr. Grover Shelton C: 301 278-3677
Aberdeen Proving Ground, MD 21005 AV: 283-3677

AMMRC
US Army Materials & Mechanics Research Center
ATTN: DRXMR-PMT, Mr. Raymond Farrow C: 617 923-3523
Watertown, MA 02172 AV: 955-3523

HDL
Harry Diamond Laboratories
ATTN: DELHD-PO, Mr. Julius Hoke
2800 Powder Mill Road C: 202 394-1551
Adelphi, MD 20783 AV: 290-1551

Rock Island Arsenal
ATTN: SARRI-ENM, Mr. Joseph DiBenedetto C: 309 794-4627/4584
Rock Island, IL 61299 AV: 793-4627/4584

Watervliet Arsenal
ATTN: SARWV-PPI, Mr. G. Spencer C: 518 266-5319
Watervliet, NY 12189 AV: 974-5319

US Army Munitions Production Base Modernization Agency
ATTN: SARPM-PBM-DP, Mr. Joseph Taglairino C: 201 328-6708
Dover, NJ 07801 AV: 880-6708

AMRDL
US Army Applied Technology Laboratory
USARTL (AVRADCOM)
ATTN: SAVDL-EU-TAS, Mr. L. Thomas Mazza C: 804 878-5732
Fort Eustis, VA 23604 AV: 927-5732

DESCOM
US Army Depot System Command
ATTN: DRSDS-PE, Mr. Jim Shindle C: 717 263-6321
Chambersburg, PA 17201 AV: 242-6321

IBEA
US Army Industrial Base Engineering Activity
ATTN: DRXIB-MT, Mr. James Carstens — C: 309 794-5113
Rock Island, IL 61299 — AV: 793-5113

DCSRDA
ATTN: DAMA-PPM-P, Mr. R. Barnett
Room 3C400, The Pentagon — C: 202 695-0506/07/08
Washington, DC 20310 — AV: 225-0506/07/08

DCSRDA (PA 1497, Aircraft)
ATTN: DAMA-WSA, LTC Jay B. Bisbey
Room 3B454, The Pentagon — C: 202 695-1362
Washington, DC 20310 — AV: 225-1362

DCSRDA (PA 2597, Missiles)
ATTN: DAMA-WSM-A, Mr. John Doyle
Room 3B485, The Pentagon — C: 202 695-8740
Washington, DC 20310 — AV: 224-8740

DCSRDA (PA 3297, Weapons; PA 3197, Tracked Combat Vehicles)
ATTN: DAMA-WSW, LTC Raymond Roskowski
Room 3D455, The Pentagon — C: 202 697-0106
Washington, DC 20310 — AV: 227-0106

DCSRDA (PA 5297, Communications/Electroncis)
ATTN: DAMA-CSC-BU, MAJ Paul Harvey
Room 3D440, The Pentagon — C: 202 695-1881
Washington, DC 20310 — AV: 225-1881

DCSRDA (Other Procurement Activities:
PA 5197, Tactical and Support Vehicles)
ATTN: DAMA-CSS-P, LTC L. R. Hawkins
Room 3D416, The Pentagon — C: 202 694-8720
Washington, DC 20310 — AV: 224-8720

DCSRDA (Other Procurement Activities:
PA 5397, Other Support)
ATTN: DAMA-CSS-P, LTC P. K. Linscott
Room 3D418, The Pentagon — C: 202 694-8720
Washington, DC 20310 — AV: 224-8720

DCSRDA (PA 4950, Ammunition)
ATTN: DAMA-CSM-DA, COL Jack King
Room 3C444, The Pentagon — C: 202 694-4330
Washington, DC 20310 — AV: 224-4330

DCSRDA (PA 4950, Ammunition)
ATTN: DAMA-CSM-P, Mr. John Mytryshyn
Room 3C444, The Pentagon — C: 202 694-4330
Washington, DC 20310 — AV: 224-4330

DISTRIBUTION

PRECEDING PAGE BLANK-NOT FILMED

DRXIB-MT
DISTRIBUTION:

Defense Technical Information Center:

Document Processing Division, Attn: DDC-DDA-2, Mr. Richard Matthews (12 cys)

Department of Defense:

DIRSO, Attn: Mr. B. Bartsch
OUSDRE (R&AT), The Pentagon, Attn: Dr. Lloyd L. Lehn (2 cys)

Department of the Army:

HQDA, OASARDA, The Pentagon, Attn: Manufacturing Technology Representative
HQDA, ODCSRDA, The Pentagon, Attn: DAMA-PPM-P, Mr. R. Barnett
DCSRDA, Attn: DAMA-WSW, LTC Raymond Roskowski
DCSRDA, Attn: DAMA-CSC-BU, MAJ Paul Harvey

HQ DARCOM:

Cdr, DARCOM, Attn: DRCCG
Cdr, DARCOM, Attn: DRCDMD
Cdr, DARCOM, Attn: DRCDMR
Cdr, DARCOM, Attn: DRCPP
Cdr, DARCOM, Attn: DRCPP-I (3 cys)
Cdr, DARCOM, Attn: DRCDE
Cdr, DARCOM, Attn: DRCMT (20 cys)
Technical Library, Attn: DRXAM-L

AVRADCOM:

Cdr, Attn: DRDAV
Cdr, Attn: DRDAV-EGX, Mr. Dan Haugan
Technical Library, St. Louis, MO

ARRADCOM:

PM, Cannon Artillery Weapons Systems, Attn: DRCPM-CAWS
Cdr, Attn: DRDAR
Cdr, Attn: DRDAR-PML, Mr. Donald J. Fischer (7 cys)
Cdr, Benet Wpns Lab, Attn: DRDAR-LCB-S, Dr. F. Heiser
Chemical Systems Lab, Technical Library, Attn: DRDAR-CLY-T

Aberdeen Proving Ground:

Cdr, Attn: STEAP-MT-M, Mr. T.R. Giroux

ARRCOM:

Cdr, Attn: DRSAR-ASA
Cdr, Attn: DRSAR-AS
Cdr, Attn: DRSAR-CG
Cdr, Attn: DRSAR-IRB, Mr. August Zahatko (5 cys)
Cdr, Attn: DRSAR-IRW, Mr. Arne Madsen (2 cys)
Cdr, Attn: DRSAR-LEP (5 cys)
Technical Library, Attn: DRSAR-LEP-L

AMMRC:

Dir, Attn: DRXMR-PMT, Mr. Raymond Farrow
Dir, Attn: DRXMR-EO, Dr. Morton Kliman
Dir, Attn: DRXMR, DRXMR-M, DRXMR-PL, (1 cy ea)
Dir, Attn: DRXMP-MI, Mr. G. Darcy, Jr.

CERCOM:

Cdr, Attn: DRSEL-LE-RI, Mr. William Coutros

CORADCOM:

Cdr, Attn: DRDCO
Cdr, Attn: DRDCO-PPA-TP, Messrs, Feddeler, Esposito, Resnic (1 cy ea)
RD&E Technical Documents Ctr, Ft. Monmouth, NJ

DESCOM:

Cdr, Attn: DRSDS

ERADCOM:

PM, Stand-off Target Acquisition Systems, Attn: DRCPM-STA
Cdr, Attn: DRDEL
Cdr, Attn: DELET-R, Mr. J. Key
Cdr, Attn: DRDEL-ED, Mr. Harold Garson

DISTRIBUTION (Cont'd):

MERADCOM:

PM, Mobile Electric Power, Attn: DRCPM-MEP (Springfield, VA)
Cdr, Attn: DRDME
Cdr, Attn: DRDME-UE, Mr. R. Goehner
Technical Library, Ft. Belvoir, VA

MICOM:

PM, HAWK, Attn: DRCPM-HA
Cdr, Attn: DRSMI
Cdr, Attn: DRSMI-RST, Messrs. Kotler, Austin (1 cy ea)
Magazine Room, Attn: RSIC

NARADCOM:

Cdr, Attn: DRDNA

TACOM:

Cdr, Attn: DRSTA
Cdr, Attn: DRSTA-RCKM, Dr. J. Chevalier
Technical Library, Warren, MI

TECOM:

Cdr, Attn: DRSTE
Cdr, Attn: DRSTE-AD-M, Mr. Grover Shelton

TSARCOM:

Cdr, Attn: DRSTS
Cdr, Attn: DRSTS-PLE, Mr. Don G. Doll

Arsenals:

Cdr, Pine Bluff Arsenal (PBA), Attn: SARPB-CO
Cdr, Rock Island Arsenal (RIA), Attn: SARRI-CO
Cdr, RIA, Attn: SARRI-ENM, Mr. Joseph DiBenedetto
Cdr, WVA, Attn: SARWV-PPI, Mr. G. Spencer
Cdr, Benet Wpns Laboratory, Attn: DRDAR-LCB-TL (Tech Library)

Munitions Production Base Modernization Agency:

Cdr, MPBMA, Attn: SARPM-PBM-DP, Mr. Joseph Taglairino

Army Ammo Plants:

Cdr, Crane AAA, Attn: SARCN-ED
Cdr, Hawthorne AAP, Attn: SARHW-ADF
Cdr, Holston AAP, Attn: SARHO
Cdr, Iowa AAP, Attn: SARIO-EN
Cdr, Lone Star AAP, Attn: SARLS
Cdr, Milan AAP, Attn: SARMI-EN
Cdr, Mississippi AAP, Attn: SARMS

Depots:

Cdr, New Cumberland Army Depot, Attn: SDSNC-ME
Cdr, Red River Army Depot, Attn: SDSRR-MO
Cdr, Sacramento Army Depot, Attn: SDSSA-RPM-1
Cdr, Tobyhanna Army Depot, Attn: SDSTO-ME
Cdr, Tooele Army Depot, Attn: SDSTE-MAN

Army Organizations:

Cdr, HDL, Attn: DELHD-PO, Mr. Julius Hoke
Cdr, Foreign Science and Technology Ctr (FSTC), Attn: DRXST-MT1, Mr. James Wamsley
Dir, Installations and Services Activity (I&SA), Attn: DRCIS-RI
Dir, Army Management Engineering Training Acty (AMETA), Attn: DRXOM-SE, Dr. Shallman (3 cys)
Cdr, Army Night Vision and Electro-Optics Lab, Attn: DELNV-RM, Mr. Sheldon Kramer
Dir, DARCOM Intern Training Center, Attn: DRXMC-ITC-E, Mr. Carter

Navy Organizations:

Cdr, NAVMAT, Attn: Mr. J. W. McInnis, Code 064
Cdr, NAVSEA, Attn: T. E. Draschil, Code C-05R23
Cdr, Naval Weapons Ctr, Attn: Code 36404
Dir, NMCIRD, Bldg 75-2, Naval Base

Air Force:

Cdr, AFML/LT, WPAFB
Cdr, AFWAL/MLTE, /MLTN, WPAFB (1 cy ea)
Cdr, AFWAL/MLS, WPAFB
Cdr, AFLC/MAX, WPAFB
Cdr, San Antonio Air Logistics Ctr, Kelly AFB, Attn: B. Boisvert, MMEI