AD-A093 403 CAI BARRINGTON ILL F/G 14/5
SHARED FOCAL PLANE INVESTIGATION FOR SERIAL FRAME CAMERAS.(U)
MAR 80 D N DEFOE N62269-79-C-0801
UNCLASSIFIED CAI-7506-0020 NADC-80053-30 NL

1 of 2

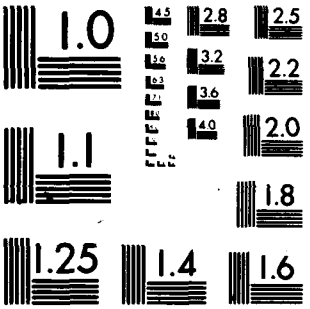

MICROCOPY RESOLUTION TEST CHART

NATIONAL BUREAU OF STANDARDS 1963-A

AD A093403 LEVEL II

Technical Report NADC 80053-30

SHARED FOCAL PLANE INVESTIGATION FOR SERIAL FRAME CAMERAS

CAI, a Division of Recon/Optical, Inc.
Barrington, Illinois 60010

March 1980

Technical Report for Period September 1979 - March 1980

NAVAL AIR DEVELOPMENT CENTER
Department of the Navy
Warminster, Pennsylvania 18974

DTIC
ELECTE
DEC 30 1980
S D
D

DDC FILE COPY

DISTRIBUTION STATEMENT A
Approved for public release;
Distribution Unlimited

80 12 29 093

SECURITY CLASSIFICATION OF THIS PAGE (When Data Entered)

REPORT DOCUMENTATION PAGE

READ INSTRUCTIONS BEFORE COMPLETING FORM

1. REPORT NUMBER: NADC 80053-30
2. GOVT ACCESSION NO.: AD-A093403
3. RECIPIENT'S CATALOG NUMBER:
4. TITLE (and Subtitle): Shared Focal Plane Investigation for Serial Frame Cameras
5. TYPE OF REPORT & PERIOD COVERED: Technical rept. Sept 1979 – Mar 1980
6. PERFORMING ORG. REPORT NUMBER: CAI-7506-0020
7. AUTHOR(s): Douglas N. DeFoe
8. CONTRACT OR GRANT NUMBER(s): N 62269-79-C-0801
9. PERFORMING ORGANIZATION NAME AND ADDRESS: CAI, a Division of Recon/Optical, Inc. 550 W. Northwest Highway Barrington, Illinois 60010
10. PROGRAM ELEMENT, PROJECT, TASK AREA & WORK UNIT NUMBERS:
11. CONTROLLING OFFICE NAME AND ADDRESS: Naval Air Development Center Department of the Navy Warminster, Pennsylvania 18974
12. REPORT DATE: Mar 1980
13. NUMBER OF PAGES: 156
14. MONITORING AGENCY NAME & ADDRESS (if different from Controlling Office): 156
15. SECURITY CLASS. (of this report): Unclassified
15a. DECLASSIFICATION DOWNGRADING SCHEDULE:
16. DISTRIBUTION STATEMENT (of this Report): Approved for public release; distribution unlimited
17. DISTRIBUTION STATEMENT (of the abstract entered in Block 20, if different from Report):
18. SUPPLEMENTARY NOTES:

Accession For
NTIS GRA&I ☒
DTIC TAB ☐
Unannounced ☐
Justification
By
Distribution/
Availability Codes
Dist A | Avail and/or Special

19. KEY WORDS (Continue on reverse side if necessary and identify by block number):

Shared Focal Plane, E-O Imaging, Frame Cameras, Focal Plane Arrays, Optical Butting, Real-time Reconnaissance, Roll Stabilization, Radiometric Correction, Video Processing, Image Exploitation.

20. ABSTRACT (Continue on reverse side if necessary and identify by block number):

Existing serial frame film cameras can be retrofitted to include an E-O focal plane array providing simultaneous collection or both film and real-time E-O imagery.

DD FORM 1 JAN 73 1473 EDITION OF 1 NOV 65 IS OBSOLETE

Unclassified
SECURITY CLASSIFICATION OF THIS PAGE (When Data Entered)

405421

TABLE OF CONTENTS

Title Page	i
Report Documentation Page	ii
Table of Contents	iii
SECTION I INTRODUCTION	1.1
Review of Requirements	1.1
Demonstration Configuration	1.1
Recommended Items	1.3
Flight Test	1.6
SECTION II STUDY DEFINITION	2.1
Missions	2.1
Operational Envelope	2.3
SECTION III HARDWARE ITEMS	3.1
Comparison of Lenses for Shared Focal Plane	3.1
Focal Plane Array Configuration	3.12
Mechanical Butting	3.12
Optical Butting - Beam Splitting	3.16
Optical Butting - Alternating Mirrors	3.17
Electronic Butting	3.19
Candidate Cameras for SFP Installation	3.21
Mechanical Configurations	3.27
Optical Compatibility	3.31
E-O Configuration	3.39
VTR Requirements	3.42
Scan Converters	3.44
Resolution	3.44
Speed	3.44
Information Content (Contrast) (Grey Scale)	3.46
Versatility	3.46
Interface	3.47
Compatibility of Digital Scan Converters	3.47
TV Monitor	3.48
Hard Copy Recorder	3.52

TABLE OF CONTENTS (CONT.)

SECTION IV INTERFACING 4.1

Focal Plane Array Electronics 4.1

Bulk Charge Subtraction 4.2

Photo Response Nonuniformity 4.5

Dark Signal Nonuniformity 4.5

Background Subtraction 4.8

Automatic Gain Control 4.8

Conclusions 4.11

Shared Focal Plane Power Budget 4.12

Stabilization 4.12

Composite Sync Interval 4.12

Scan Converter 4.13

Video Recording Format 4.14

Bandwidth Reduction Techniques for Focal Plane Array Video 4.14

Alternate Pixel Recording 4.14

Alternate Line Recording 4.16

Data Encoder 4.18

Data Decoder 4.18

Scan Converter Input Interface 4.20

Scan Converter/Display Interface 4.20

Shared Focal Plane Moving Map Display 4.20

Cueing 4.26

Joystick 4.26

Fixed Grid 4.26

Light Pen 4.26

Light Pen 4.27

High V/R - Variable Lines/Frame Impact 4.27

Image Enhancement 4.29

Operator's Panel 4.29

Airborne System Electronics 4.29

SFP Ground System 4.33

SECTION V PERFORMANCE 5.1

Shared Focal Plane System Signal Degradation 5.3

A. CCD and Preamp 5.3

B. A/D and Digital Subsystem 5.4

C. Tape Recorder RCA Advisor 62B 5.4

TABLE OF CONTENTS (CONT.)

D. Replay Zoom Processing 5.4

E. Scan Converter 5.4

F. Monitor 5.5

G. Hard Copy Recorder 5.5

Appendix A Focal Plane Array Test Program A.1

SECTION I
INTRODUCTION

REVIEW OF REQUIREMENTS

The purpose of this investigation is to determine the feasibility of retrofitting an existing 4.5-inch format serial frame camera to include an electro-optic (E-O) focal plane array. The objective is to provide simultaneous collection of film and E-O imagery and to transmit the E-O imagery for near-real-time display and analysis. While it is not necessary for the purposes of feasibility demonstration to actually transmit the imagery over a data link, the system should be configured to simulate such a process and allow its inclusion if desired. This report details the results of the study with recommendations for specific equipment and interfacing, as well as the overall configuration to demonstrate feasibility within the directives defined by the Statement of Work.

In particular, a system study was performed and is discussed in section II. Sections III and IV describe and detail cost versus performance tradeoffs involved in the equipment and interfacing items, respectively, including such factors as versatility and availability. The final section provides analyses of performance expected from the recommended system. The results and discussion of the analyses performed on both CAI's focal array and the GFE focal plane array can be found in appendix A.

DEMONSTRATION CONFIGURATION

To demonstrate the feasibility of the shared focal plane (SFP) concept, several processes must be accomplished. Quite obviously they are the collection, storage and display of information. Transmission has been omitted because it is a proven capability and is not required to demonstrate this concept. Collection of information naturally implies a platform, camera, lens and focal plane array. The information flow and necessary components are shown in figure 1.1.

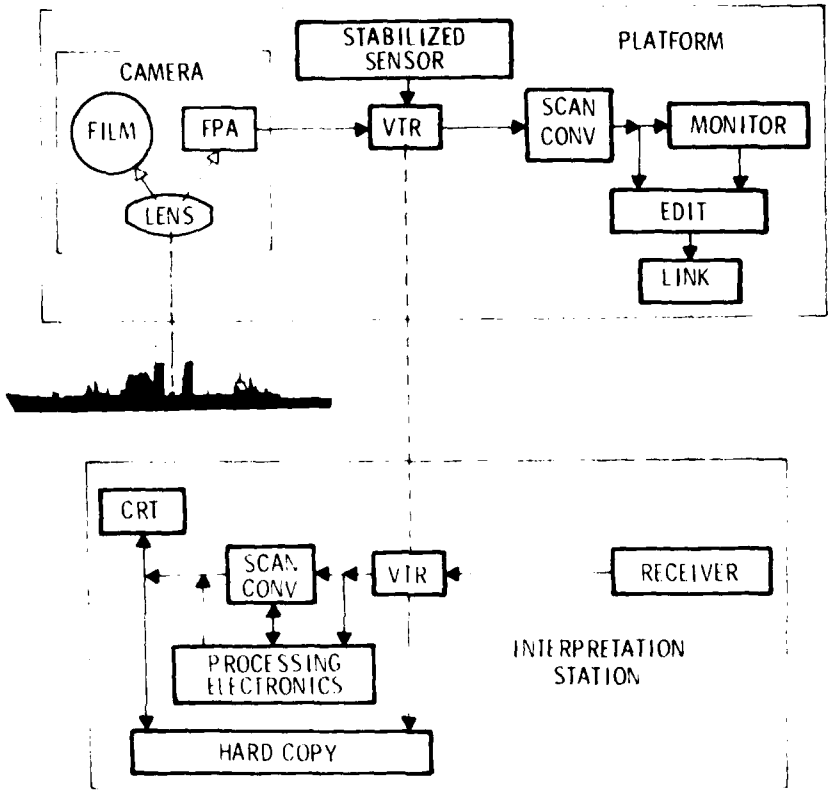

FIGURE 1.1 SHARED FOCAL PLANE INFORMATION FLOW AND COMPONENTS

To illustrate the versatility of shared collection, the Statement of Work directs that interchangeable lenses be demonstrated. In addition, because there are several techniques for building up long focal plane arrays, it is recommended that two generic methods be demonstrated with interchangeable focal plane arrays.

Information storage can be accomplished by several technologies, but the most common and mature among them is video tape recording. In terms of display, there are both soft copy and hard copy possibilities. However, these are complementary rather than competitive. Hence, it is recommended that both capabilities be demonstrated using a video monitor and a film recorder. In addition, to mediate between tape recorder and display, especially the monitor, scan converters are required.

With these items and appropriate interfacing, a versatile and useful feasibility demonstration is proposed which will prove the viability of shared simultaneous collection of imagery.

RECOMMENDED ITEMS

For the sake of demonstration and to allow as complete a test of the system as possible, a Fairchild Heliporter is the recommended platform. This aircraft can be rented for a reasonable price, has excellent performance for test purposes and offers a large volume for equipment and personnel desired for on-board monitoring. The camera will be a KA-50, both because of the feasibility of incorporating the E-O array and because several interchangeable lenses are available to prove the versatility of the system. The lenses which are recommended to be demonstrated are a 12-inch fl, f/4, an 18-inch fl, f/4 and a 24-inch fl, f/5.6. It is also recommended that both the CAI-developed and GFE focal plane arrays be demonstrated to compare butting methods in terms of performance under various lighting conditions, response uniformity and the effects of overlapped versus end-to-end butting.

The recommended tape recorder is a dual-channel RCA Advisor 62 because of its availability and bandwidth capability. Two scan converters are required and, being both available and best-performing, PEP 500's have been chosen. The least expensive of several comparable monitors is the Ball Model BH-15, but either the CONRAC QQA-14 or Sierra Scientific HD 1501 can be used as available. Finally, a Honeywell Model 1856A film recorder is highly recommended for its versatility and performance. While it may be necessary because of availability to choose the Perkin Elmer LED recorder, it may degrade the imagery due to its reduced bandwidth capability.

In terms of system operation, the preferred approach for stabilization is to record stabilization data on tape synchronous with the video signal, and to correct the imagery on display to the required level. The hard copy recording can be continuous, low resolution strip directly from tape, with any soft copy frame printed on request. It is recommended for cost and resolution considerations that the monitor display be in frame mode rather than continuous scroll. The operator may then command freeze frame, analog zoom and slew, true zoom 4X and 16X by cuing with a light pen any portion of the currently displayed frame and hard copy prints of the display. Various forms of image enhancement are not recommended for demonstration purposes because the cost of implementation does not justify their minimal utility.

Based on the above recommended configuration, the system's leading particulars and expected performance for several typical conditions are listed in table I-1.

There will be only two effects on the normal film operation. First, in any configuration, some vignetting of the film format must occur. The specific numbers are given in section III. Second, for the demonstration system only, the frame cycle rate will be reduced to 2 frames/s. However, in an operational system, the full 6-frame/s capability will be restored.

TABLE I-1

SYSTEM LEADING PARTICULARS

	Range (ft)	Contrast	Lens Focal Length (inches) 12	18	24
Coverage			22.1°	15.2°	11.5°
Resolution (m/lp)	1000	6:1	5-1/4	3-1/2	2-5/8
(velocity 500 ft/s)	1000	1.2:1	9	6	4-1/2
	6000	6:1	9	6	4-1/2
	6000	1.2:1	21	14	10-1/2

Bandwidth:	8.3 MHz
Spectral response:	.5 - .9 μm
Display frame rate:	5.5/s
Power required for focal plane array:	300 W

FLIGHT TEST

In order to fully assess the capabilities and limitations of the SFP system, it is proposed that the flight test for the system be planned to use the camera in a side oblique mode with approximately a 30° depression angle. Imagery using each of the three lenses, as well as each of the focal plane arrays, should be collected while simulating several mission types under as wide a variety of illumination and weather conditions as can be accommodated.

SECTION II
STUDY DEFINITION

There are essentially three methods of acquiring E-O imagery. They are with tube sensors, area array CCD's and linear array CCD's. The first two, while allowing relatively long times for imaging, have small formats and low resolution compared to linear arrays. Attempts to build up large area format coverage by beam splitting techniques involve large losses of light and would substantially interfere with the acquisition of imagery on film. Linear arrays, on the other hand, can be butted to long lengths by several methods with little light loss, and can operate at an edge of the film format to minimize any effect on the film portion of the system.

The only constraints on the system in the Statement of Work are the use of a 4.5-inch format serial frame camera with interchangeable lenses. The required combination of simultaneous acquisition of imagery and a frame format camera necessitate a pushbroom mode of operation for a linear E-O array in order to provide the scanning motion. In turn, this mode obviates any future potential for TDI arrays except in vertical or forward oblique operation. In side oblique pushbroom operation, image motion rates vary over the format and thus TDI arrays would be unable to maintain phase in tracking the scene. Nevertheless, since this study need only demonstrate feasibility of the SFP concept, this particular limitation does not bear on the question. One need only keep in mind that different applications may require modifications in implementation.

MISSIONS

The potential applications for E-O imagery are as numerous, and probably more numerous than for film imagery. There are currently three missions which are receiving the greatest attention of planners and the intelligence community: long range standoff, low altitude penetration and science and technology (S & T). The SFP camera is well suited to any of these three. However, since it is desired to assess the capabilities and limitations of E-O image acquisition, rather than lenses and peripheral

equipment, and because of its near-term applications, the latter is the appropriate one to investigate for this study. The combination of wide variations and especially large values of V/R, long focal length lenses and high resolution required by such missions should provide a good test of the concept, the results of which can be applied to the other two missions mentioned.

For the S & T mission, the system should operate at fairly high V/R ratios, up to 1.5, with relatively long focal length lenses. Due to the high V/R ratio, and because a lower limit on intergration time must be set for lighting, bandwidth and electronic clocking considerations, it is expected that the system resolution will be image smear limited at close ranges and will be pixel dimension limited at far ranges. S & T missions in maritime environments generally offer quite high inherent target-to-background contrasts, up to 5, but detail contrasts can be quite low. Hence, this type of mission should again be a good test of E-O capabilities.

Given a 4-1/2-inch format, coverage is determined by focal length and range. Because targets can be up to 150 ft in height, there are lower limits to ranges expected. In general, there is a fairly narrow flightpath that will provide both the necessary film resolution for S & T analysis and full coverage of the target. The time to cover the target length is determined by the platform velocity. Again, for maritime targets this time is on the order of 1 s or less.

Some calculations involving lighting and CCD response show that the system should operate in clear and overcast conditions with the lenses under consideration. In clear days, 30 percent reflectance should provide near-saturation exposures.

It is emphasized at this point that the above discussion of missions is meant only to provide a framework for consideration of the SFP camera capabilities. In fact, the demonstration system is intended to demonstrate what can be expected from SFP cameras for any given mission under various conditions. The S & T mission is used because it requires a versatility uncommon in general.

OPERATIONAL ENVELOPE

Tables II-1 and II-2 and figures 2.1 and 2.2 are intended to show first estimates of system parameters. Detailed analyses of expected performance are provided in section V.

The value of E-O imagery lies chiefly in its real-time nature and perhaps low contrast performance, rather than its resolution. Hence, interpretation of the imagery should be in real time or near-real time to realize its advantages over film. This can be done in soft copy on a video display or hard copy on wet or dry process film. The former offers the more versatility and allows the interpreter several methods of enhancement and interactive control. Nevertheless, hard copy capability is desirable to produce permanent, transportable copy of items of immediate interest. With both kinds of displays available, the interpreter can examine imagery in real time, view selected areas at higher magnification if desired, make whatever adjustments deemed necessary to best define any particular object, and produce a hard copy from the display to back up the intelligence report. Furthermore, continuous scroll hard copy can be produced in real time. E-O imagery allows fast exploitation of fleeting targets, greatly reduced times to create needed up-to-the-minute intelligence reports, as well as preliminary interpretation of fixed targets to better use the high resolution film imagery when it returns.

Operator workload is kept to a minimum by initially providing full format imagery on the video display, albeit at reduced resolution, and blow-ups on command for select areas of interest or suspected activity. While enhancement techniques can be implemented, their value is questionable and are generally time-consuming which, for real-time operations, further reduce their effectiveness. It is a goal of this system design to let the interpreter concentrate on rapid interpretation using only a few simple and necessary controls.

TABLE II-1

SFP TARGETS AND ENVIRONMENT

Class	Targets Length (ft)	Height (ft)
Mine hunters	165	75
Destroyers	250	90
Frigates	275	90
Carriers	500 - 1000	150
Land vehicles	20 - 40	4 - 6

Reflectance 30 percent typical; Time for 1 pass at 300 kn: .33 to 1.0 s

Environment

Perspective	Oblique, 30° depression nominal
Velocity	300 ft/s nominal
Range	Down to several hundred feet for very high resolution film imagery
Target	Ships, 30 percent reflectance nominal
Operational envelope	Day, fair weather, all year
Countermeasures and threat	None

Ground Resolution Requirements (ft)

	Maritime	Littoral	Land Fixed	Land Mobile
Detail	25	20	20	10
Recognition	10	10	10	4
Identification	4	2	2	1
Analysis	.08	.25	.25	.25
S & T	.025	.025	.025	.025

TABLE II-2
SYSTEM PARAMETERS

Focal Length	Slant Range (ft)	Angular FOV	Linear FOV (ft)	Integration Time - (μs)	Geometrical Ground Resolution (inches/lp*)	Data Rate** (b/s)	Video BW - (Hz)	V/R (rad/s)
	200	14.25°	50	18.96	0.137	2.74×10^9	2.28×10^8	1.5
	500	14.25°	125	47.4	0.341	1.09×10^9	9.12×10^7	0.6
18 inches	1000	14.25°	250	94.8	0.682	5.48×10^8	4.56×10^7	0.3
	2000	14.25°	500	189.6	1.36	2.74×10^8	2.28×10^7	0.15
	5000	14.25°	1250	474	3.41	1.09×10^8	9.12×10^6	0.06
	200	21.24°	75	28.43	0.206	1.82×10^9	1.52×10^8	.5
	500	21.24°	187.5	71.08	0.514	7.29×10^8	6.08×10^7	.6
12 inches	1000	21.24°	375	142.15	1.028	3.65×10^8	3.04×10^7	.3
	2000	21.24°	750	284.3	2.055	1.82×10^8	1.52×10^7	.15
	5000	21.24°	1875	710.8	5.14	7.29×10^7	6.08×10^6	.06

** 6 bits/pixel

* corresponds to 38.5 lp/mm

V	300 ft/s
Qd	30°
pixels/line	8640 (5 x 1728)
pixel size	13 x 13 μm
line length	4.5 in

Formulas

Angular FOV $\quad 2 \tan^{-1} \left(\frac{\text{image format}/2}{\text{focal length}} \right)$

Linear FOV $\quad$ (slant range) $\left(\frac{\text{image format}}{\text{focal length}} \right)$

Integration time $\quad \frac{\text{(slant range)}}{\text{(velocity)}} \; \frac{\text{(pixel dimension)}}{\text{(focal length)}}$

Geometrical ground resolution $\quad \frac{\text{(2x pixel dimension)} \quad \text{(slant range)}}{\text{focal length}}$

Data rate $\quad \frac{\text{(pixels/line) (bits/pixel)}}{\text{integration time}}$

Video bandwidth $\quad 1/2 \; \frac{\text{(pixels/line)}}{\text{(integration time)}}$

V/R $\quad$ (velocity) $\quad$ (slant range)

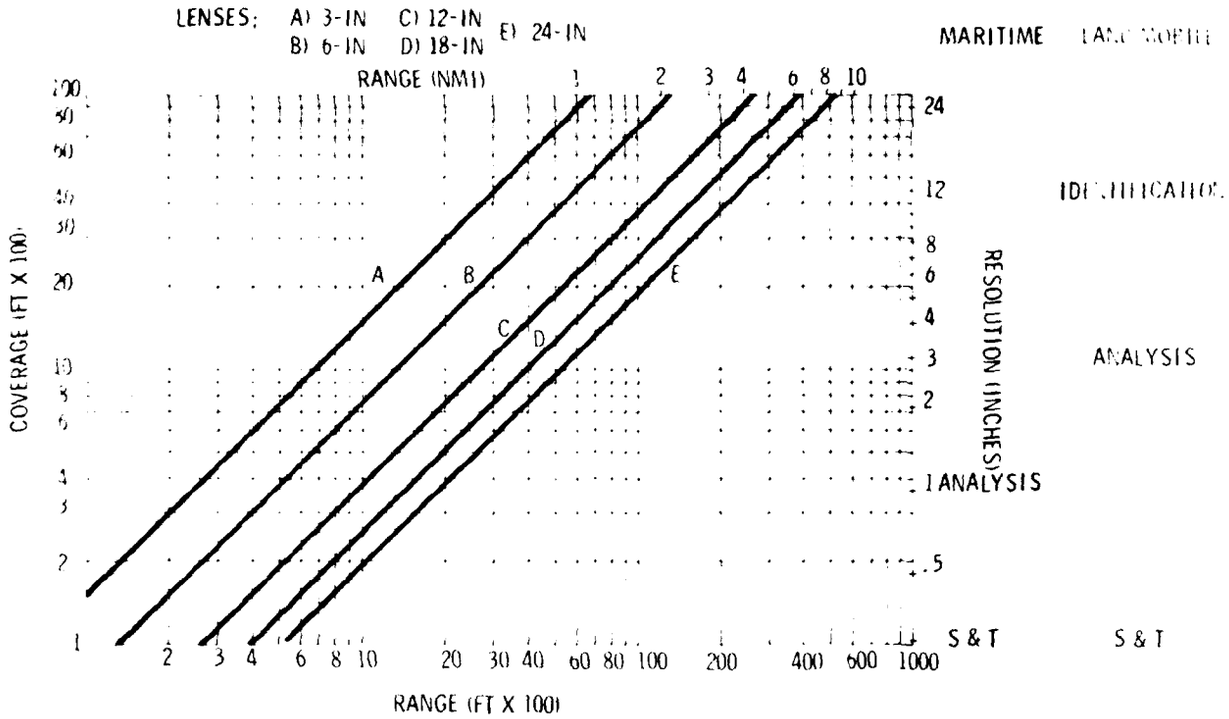

FIGURE 2.1 COVERAGE AND RESOLUTION VS RANGE AND FOCAL LENGTH

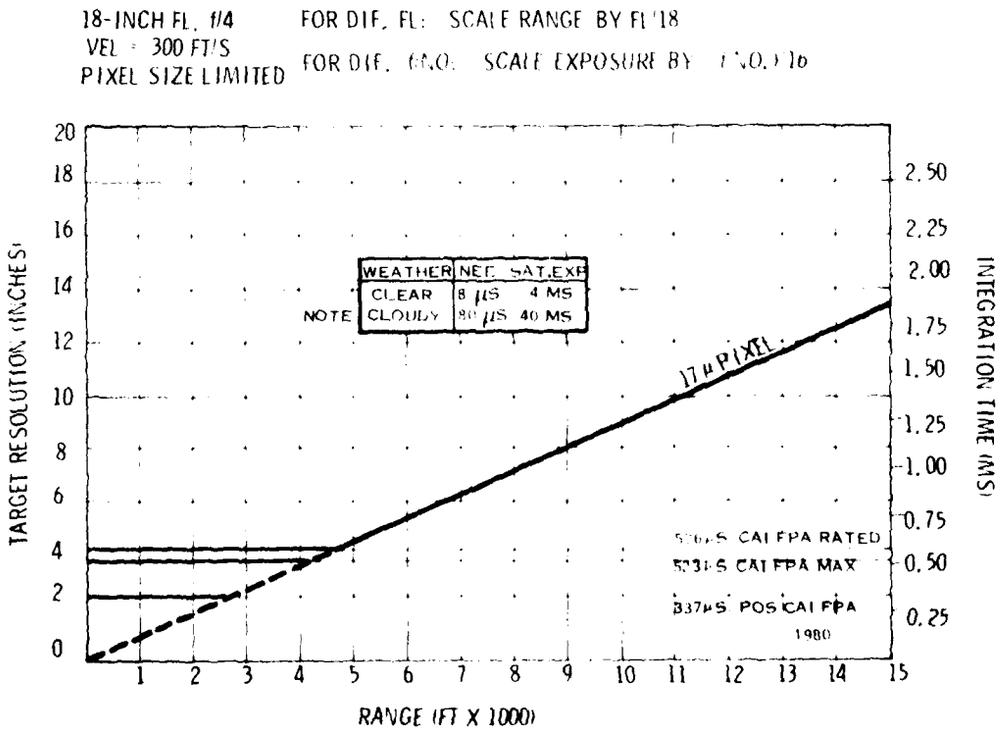

FIGURE 2.2 RANGE VS RESOLUTION

SECTION III

HARDWARE ITEMS

There are five 4-1/2-inch format frame cameras in current U.S. Navy inventory produced by CAI. These are the KA-50, KA-51, KA-53, KA-62 and the KS-87. Because of the requirement for interchangeable lens cones, only the KS-87 shown in figure 3.1, with its 3, 6, 12 and 18-inch fl lens cones and the KA-50 shown in figure 3.2, with its variety of lens cones developed by the Navy are contenders. It will be shown below that using 3 or 6-inch fl lenses would cause difficult design problems for this feasibility demonstrator. The KS-87 is then limited to 12 and 18-inch focal lengths. The KA-50, on the other hand, can be demonstrated with 12, 18, 24 and possibly 36-inch fl Navy lenses. This fact, coupled with a surplus of such cameras (since the aircraft on which they have been used have become obsolete) make the KA-50 series camera the prime choice.

COMPARISON OF LENSES FOR SHARED FOCAL PLANE

Several different lens types exist as potential candidates for deployment in a SFP configuration using either a KA-50 or KS-87 type camera back. The particular candidates are a 6-inch fl, f/2.8; a 12-inch fl, f/4; an 18-inch fl, f/4.0; a 24-inch fl, f/5.6; and a 24-inch fl, f/3.5. The two 24-inch fl lenses were not given as complete an analysis as the other lenses since they do not exist as customer inventory, however, they should be representative of the customer's existing 24-inch fl lens.

Regardless of which lens is to be used, the position of the E-O focal plane array will be nominally at one edge of the 4.5 x 4.5-inch film format. In this location, the pixel elements of the array are all at distances ranging from 2.2 to 3.3 inches off of the optical axis. This then becomes the area of interest with regard to the performance of the E-O detector array. The off-axis positions between 2.2 and 3.3 inches for these lenses were examined for both light collecting ability and for optical resolution performance.

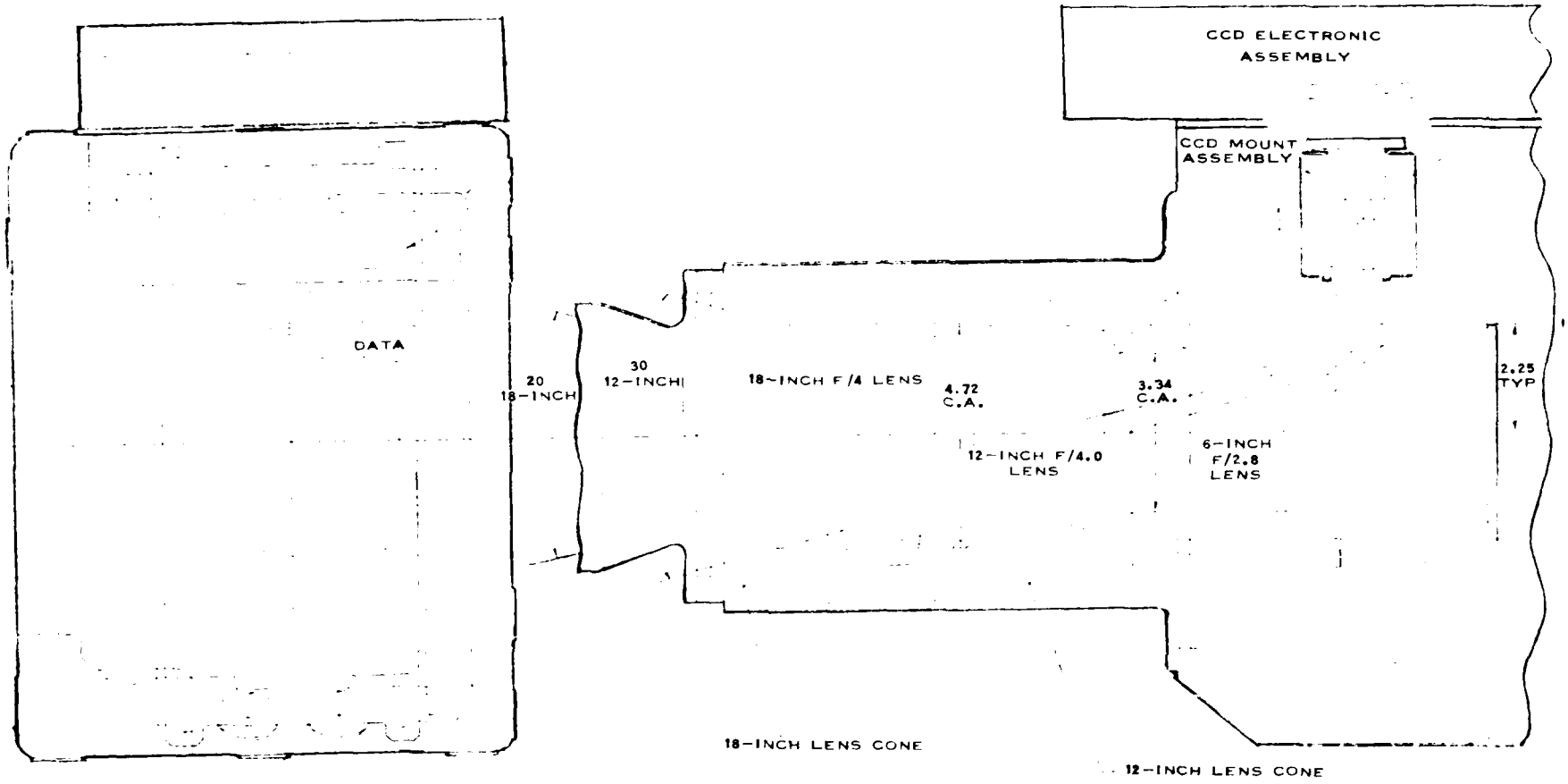

FIGURE 3.1
E-O/PHOTO KS-87 TYPE CAMERA WITH INTERCHANGEABLE 6, 12 AND 18-INCH FL LENSES

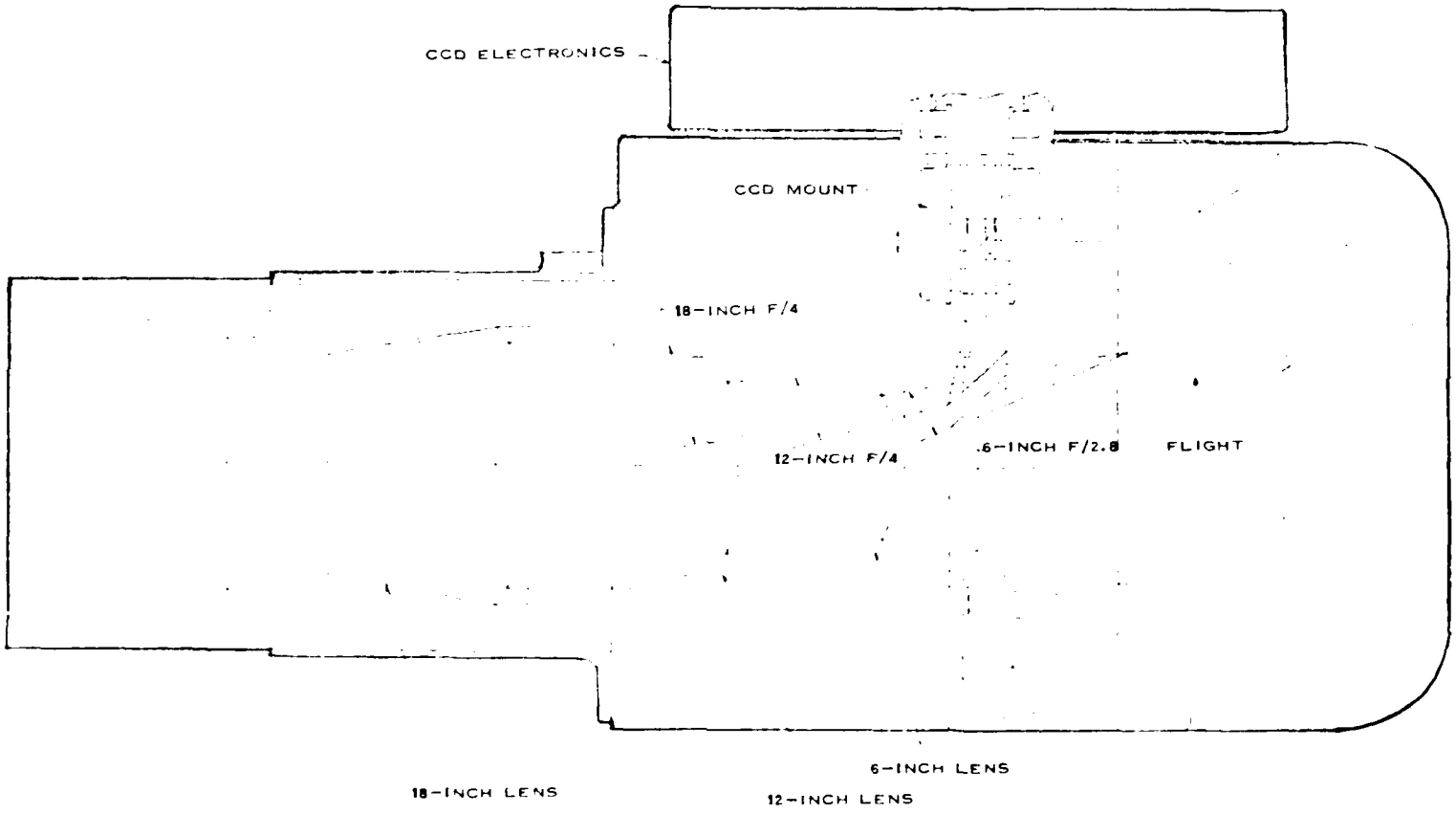

FIGURE 3.2
E-O/PHOTO KA-50 TYPE CAMERA WITH INTERCHANGEABLE 6, 12 AND 18-INCH FL LENSES

Figure 3.3 is a plot of flux collection as a function of image field position for all five of the above selected lenses. The flux collecting function is plotted in solid angle measure (steradians) of light collected at each position in the image, up to a maximum image height of 4 inches from the optical axis. In the zone between 2.2 and 3.3 inches image height can clearly be seen the effects of $\cos^4\theta$ falloff and vignetting characteristics of these lenses, most particularly the 6-inch fl. f/2.8 lens. In effect, with the CCD linear array positioned at the edge of the 4.5 x 4.5-inch format, the 6-inch fl. f/2.8 lens "appears" to be an f/4 near the center of the array and an f/5.6 near the array ends. While not a desirable characteristic, this light falloff along the array length can be compensated electronically, albeit at some signal-to-noise ratio degradation.

From figure 3.3 it can be concluded that any of the lens candidates can be used insofar as their light collecting function is concerned, at least over some range of scene illumination conditions. None of the lens candidates is effectively reduced to much less than f/5.6 over the array length, except the 24-inch fl. f/5.6 lens itself which is reduced to half way between an f/5.6 and an f/8.0. The most promising lens is the 18-inch fl. f/4.0, which has an average aperture characteristic of f/4.5 over the entire array. Next promising is the 12-inch fl. f/4, with an average effective aperture of about f/5.0.

Figures 3.4, 3.5 and 3.6 give plots of lens MTF versus image height for the 6-inch fl. f/2.8, the 12-inch fl. f/4.0 and 18-inch fl. f/4.0 lenses, respectively. Each of these performance curves was generated for a broad spectrum representing a solar spectrum with W-12 filtering and a Corning 1-75 and the responsivity of the silicon detector. Basically the performance includes the spectrum between 0.5 and 0.9 μm. None of the candidate lenses were intended or designed for use beyond about 0.7 μm, therefore the performance of each is definitely compromised in this application.

From figure 3.4 it is quite clear that the 6-inch fl. f/2.8 lens is not a good candidate for this application. At resolution values between 20 and 40 lp/mm, only the center of the CCD array would be receiving any usable

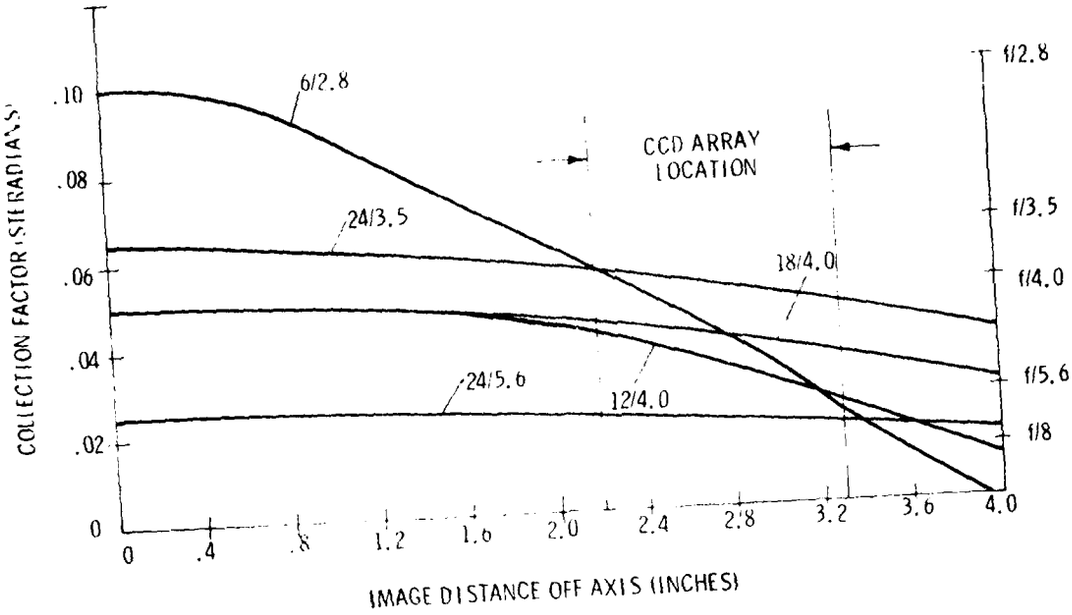

FIGURE 3.3 COLLECTION FACTORS

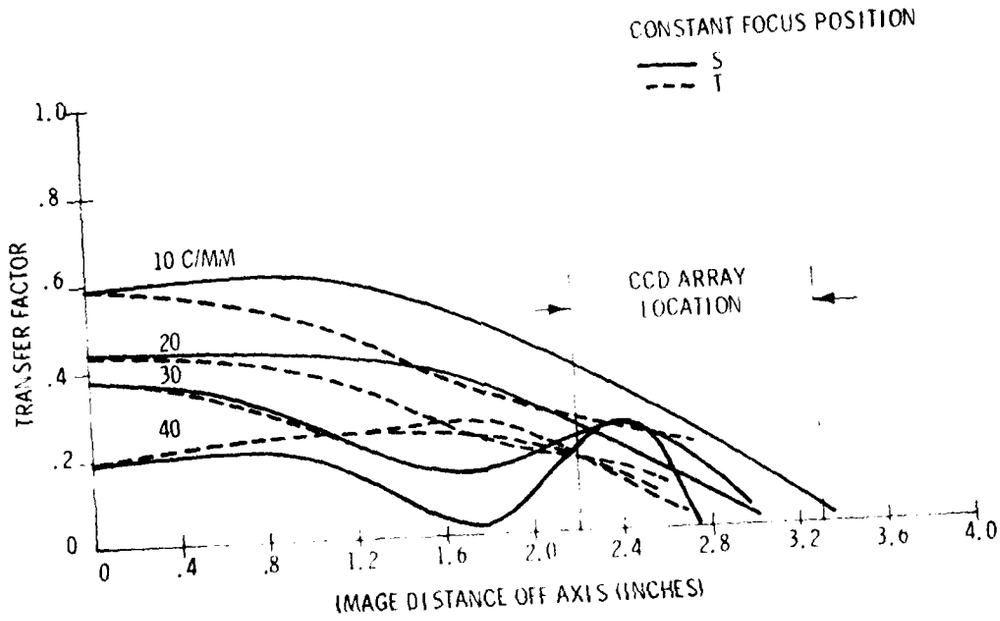

FIGURE 3.4 MTF FOR 6-INCH FL, f/2.8 LENS

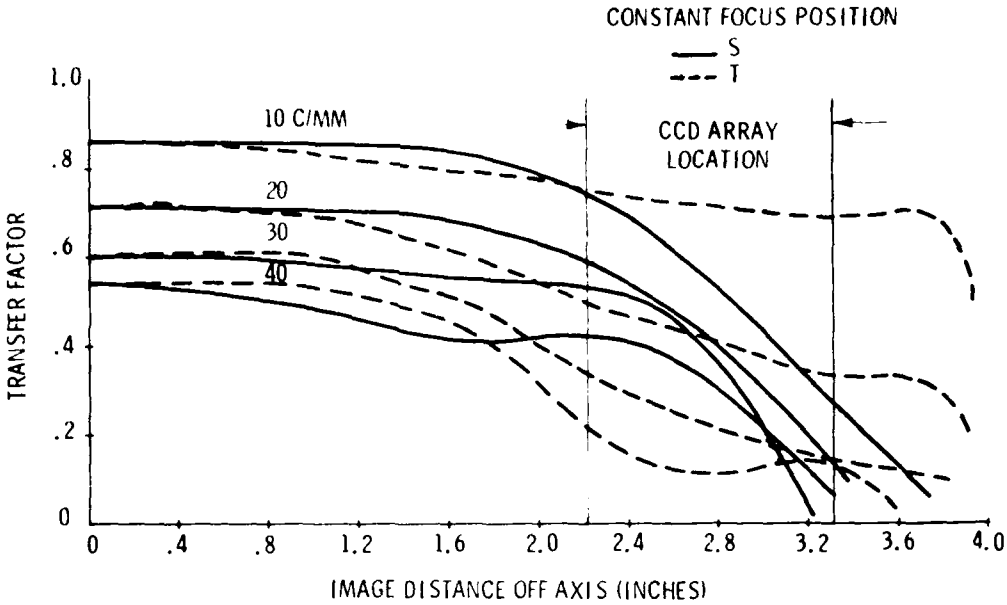

FIGURE 3.5 MTF FOR 12-INCH FL, f/4 LENS

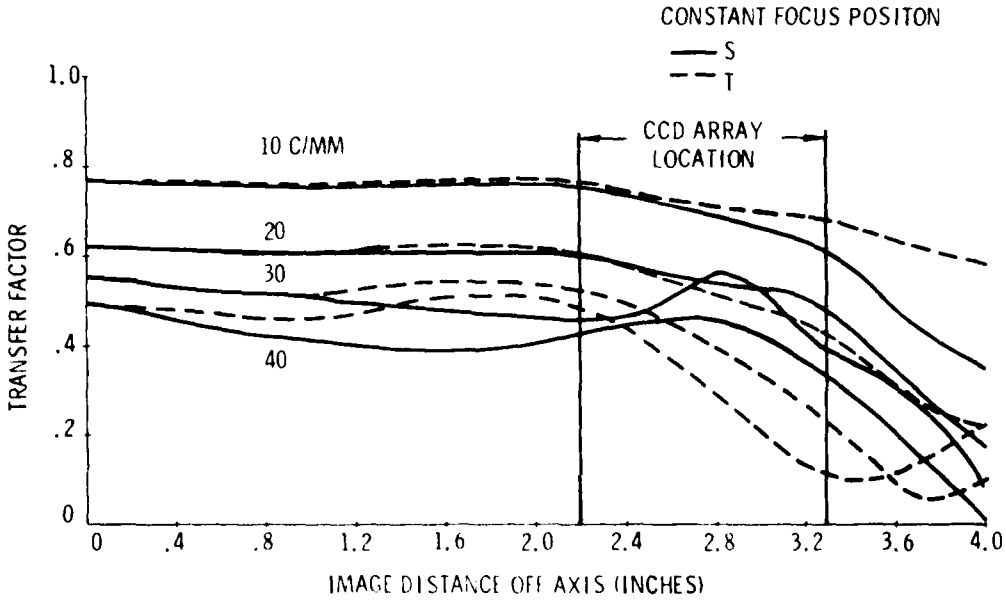

FIGURE 3.6 MTF FOR 18-INCH FL, f/4 LENS

signal modulation. At the ends of the array, the image modulation is almost nonexistent except for quite coarse target sizes. Any potential improvement in image quality can only come by reductions in either the spectrum or aperture or both.

In figure 3.5, the performance curves for the 12-inch fl, f/4.0 lens show a definite improvement when compared to the 6-inch fl lens. The improvement in MTF is attributable to both a reduction in relative aperture and more significantly a reduction in field angles. While the performance predicted in these curves leaves much to be desired, the signal modulation at the center of the array would be quite adequate for good imagery. Only at the ends of the array is the resolution seriously degraded at the 20 to 40-lp/mm level. Between 10 to 20-lp/mm resolution, the image modulation at the ends of the array is still usable.

In figure 3.6, the MTF performance curves indicate that the 18-inch fl, f/4.0 lens is definitely a good candidate lens for this application. Only at the very end of the array is the signal modulation beginning to get weak at the 30 to 40-lp/mm resolution level. From the 20 to 30-lp/mm level, the entire array will see an optical signal clean enough for usable imagery.

MTF data was not run for either of the two 24-inch fl lens candidates because they were not considered "real" candidates. However, past history in examining these lenses for similar applications has been favorable and allows us to predict that either the f/3.5 or f/5.6 would produce image modulation that is equal to or somewhat better than that of the 18-inch fl, f/4.0 lens.

Two of the mechanical configurations discussed below involve the use of glass to extend the optical path. The optical effects have been evaluated in terms of the MTF. Figures 3.7 and 3.8 are graphs of the MTF through focus without and with this glass, respectively, at three positions (center, halfway between center and edge, and at the edge) in the E-O image format. In addition, figures 3.9 and 3.10 show the MTF's at optimum focus as functions of frequency. Clearly the inclusion of path lengthening glass would severely degrade performance.

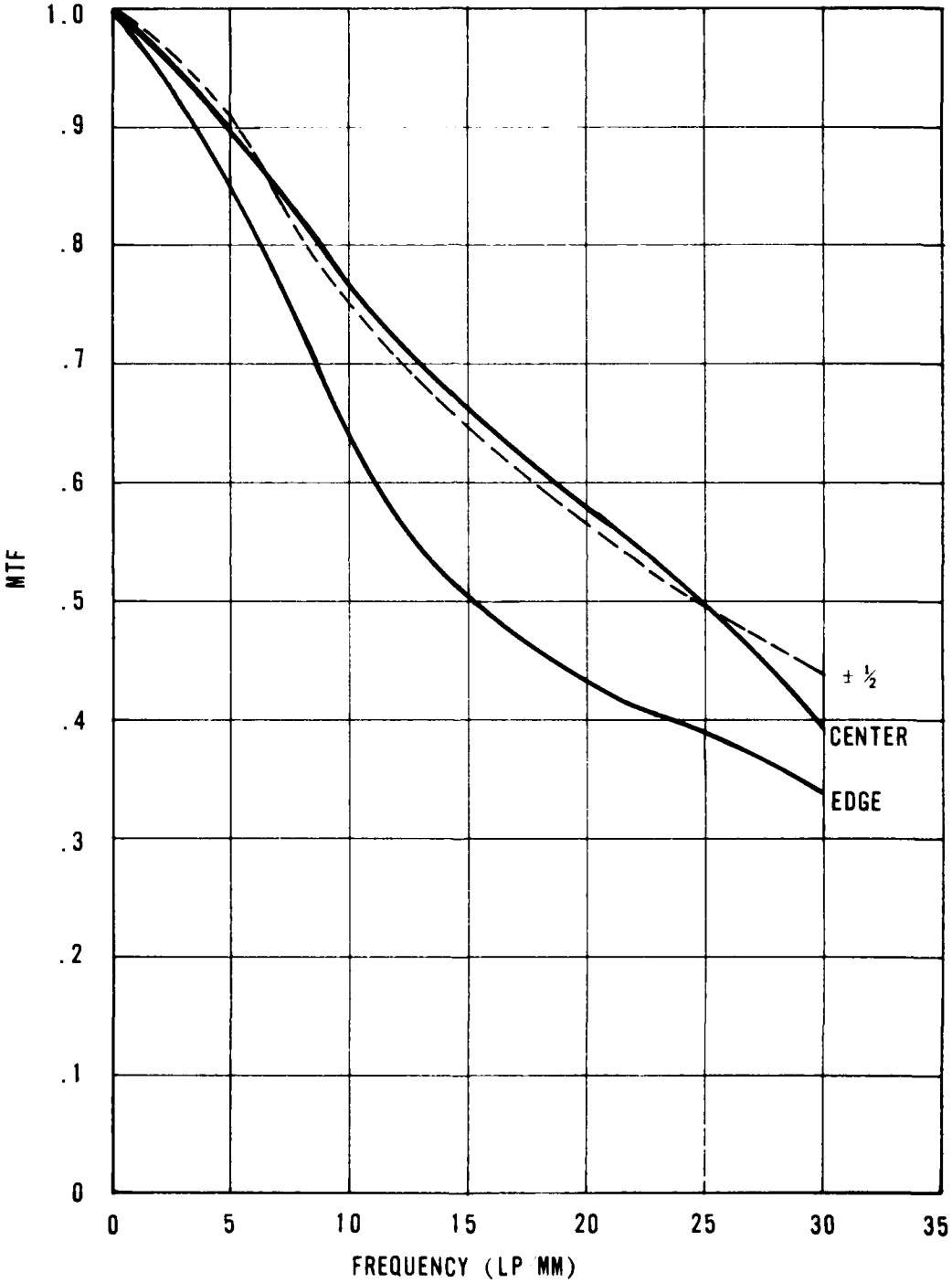

FIGURE 3.7 MTF FOR FOCAL PLANE ARRAY INSIDE SHUTTER ASSEMBLY

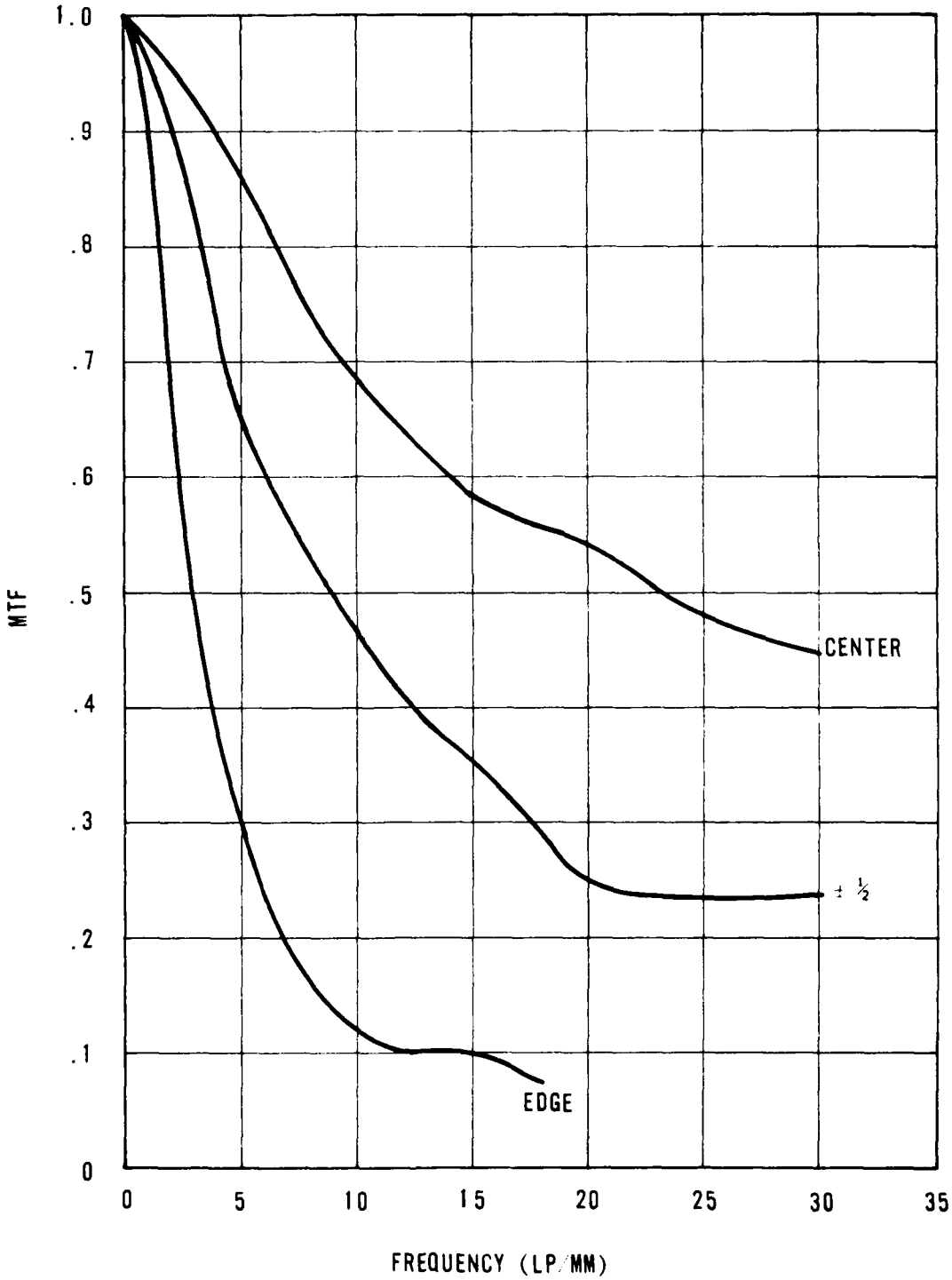

FIGURE 3.8 MTF FOR FOCAL PLANE ARRAY WITH GLASS PATH EXTENSION MOUNTED OUTSIDE SHUTTER ASSEMBLY

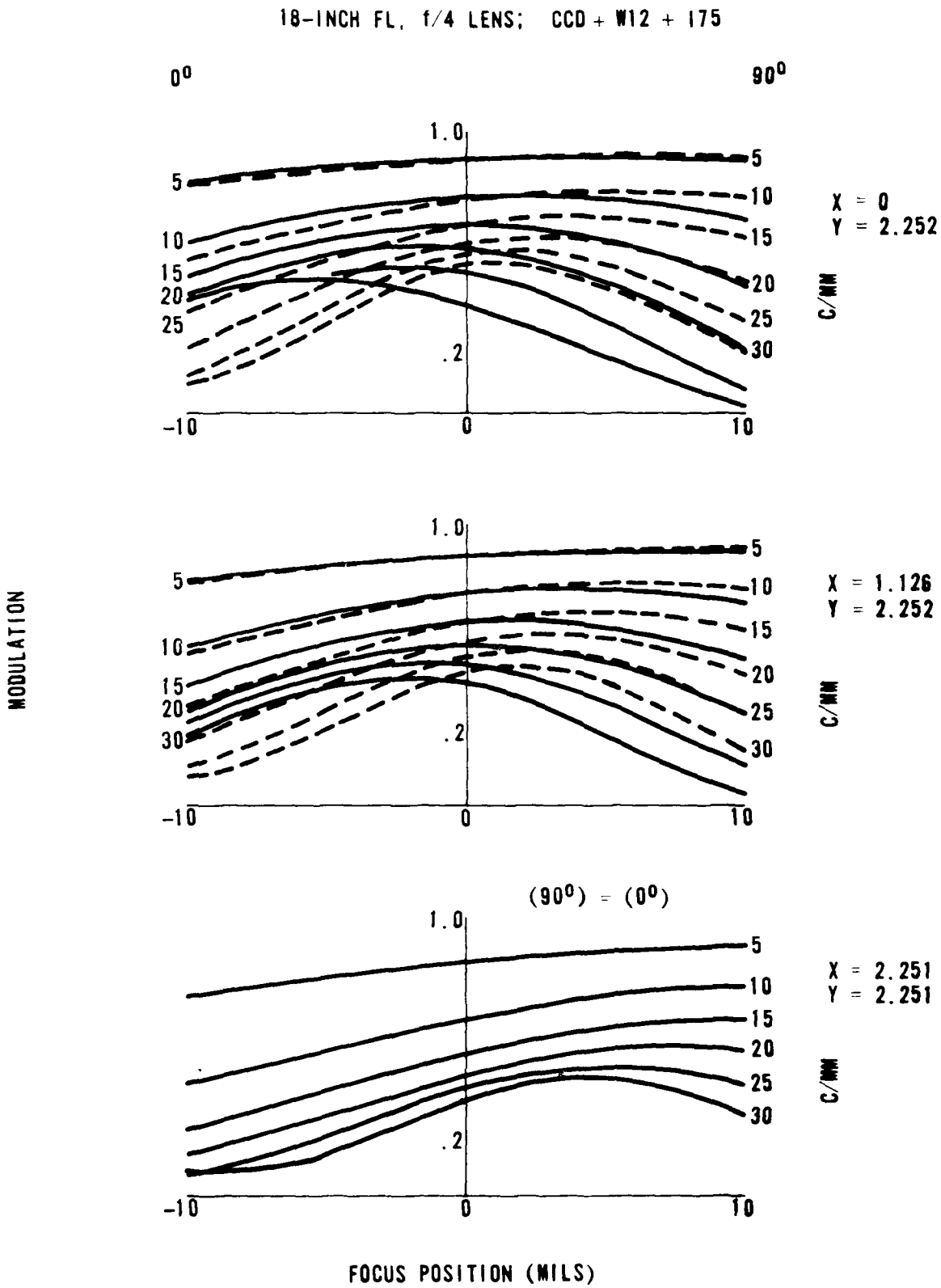

FIGURE 3.9 MODULATION THROUGH FOCUS WITH BUTTING PRISM

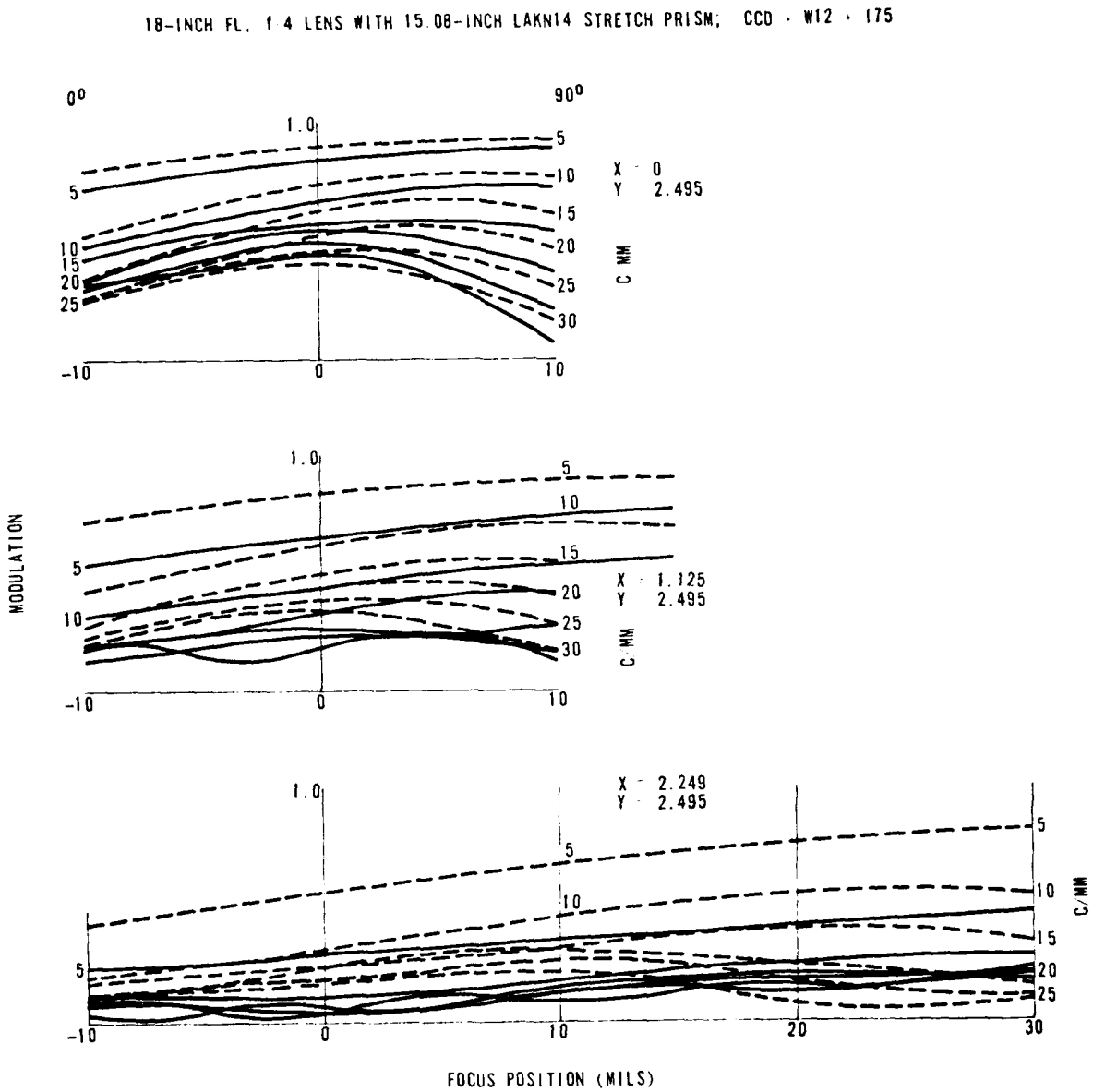

FIGURE 3.10 MODULATION THROUGH FOCUS WITH BUTTING AND STRETCH PRISM

As compared to film, figures 3.11 and 3.12 illustrate the lens MTF's for Pan-X spectrum.

As a result of these considerations, vignetting of the film imagery and problems when using alternating-mirror, optically-butted focal plane arrays for interchangeable lenses discussed below, the 6-inch fl lens has been eliminated as a viable candidate. Because of availability, it is recommended that the feasibility demonstration include tests using 12, 18 and 24-inch fl lenses. Longer focal lengths can be accommodated easily. However, the light collecting abilities of such lenses may severely limit the operational envelope in which E-O imagery can reasonably be obtained.

FOCAL PLANE ARRAY CONFIGURATION

There are four potential configurations of CCD's to synthesize an array length of between 4 and 5 inches. These schemes are the following:

- Mechanical butting
- Optical butting - beam splitting
- Optical butting - alternating mirrors
- Electronic butting

Figure 3.13 illustrates the methods schematically and summarizes the advantages and disadvantages of each.

Mechanical Butting

Of the four potential schemes for producing a long linear array from several smaller ones, mechanical butting is the most desirable from a technical point of view. Mechanical butting is accomplished by physically butting the end of one array to the start of the next array, hopefully with little or no pixel gap existing at the junctions. Such an array can then be placed directly in the focal plane of a large variety of lenses with minimum optical considerations and with no inherent light loss due to auxiliary optical components.

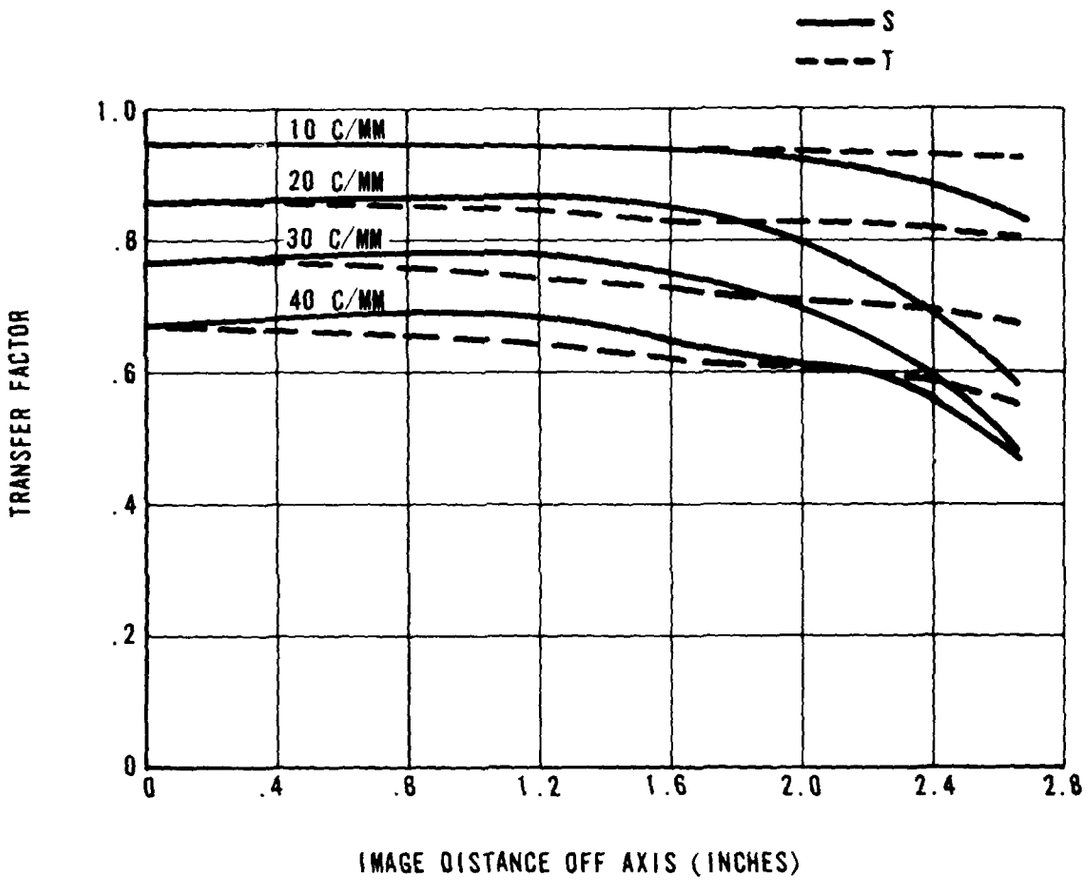

FIGURE 3.11 12-INCH FL, f/4.0 PAN-X SPECTRUM

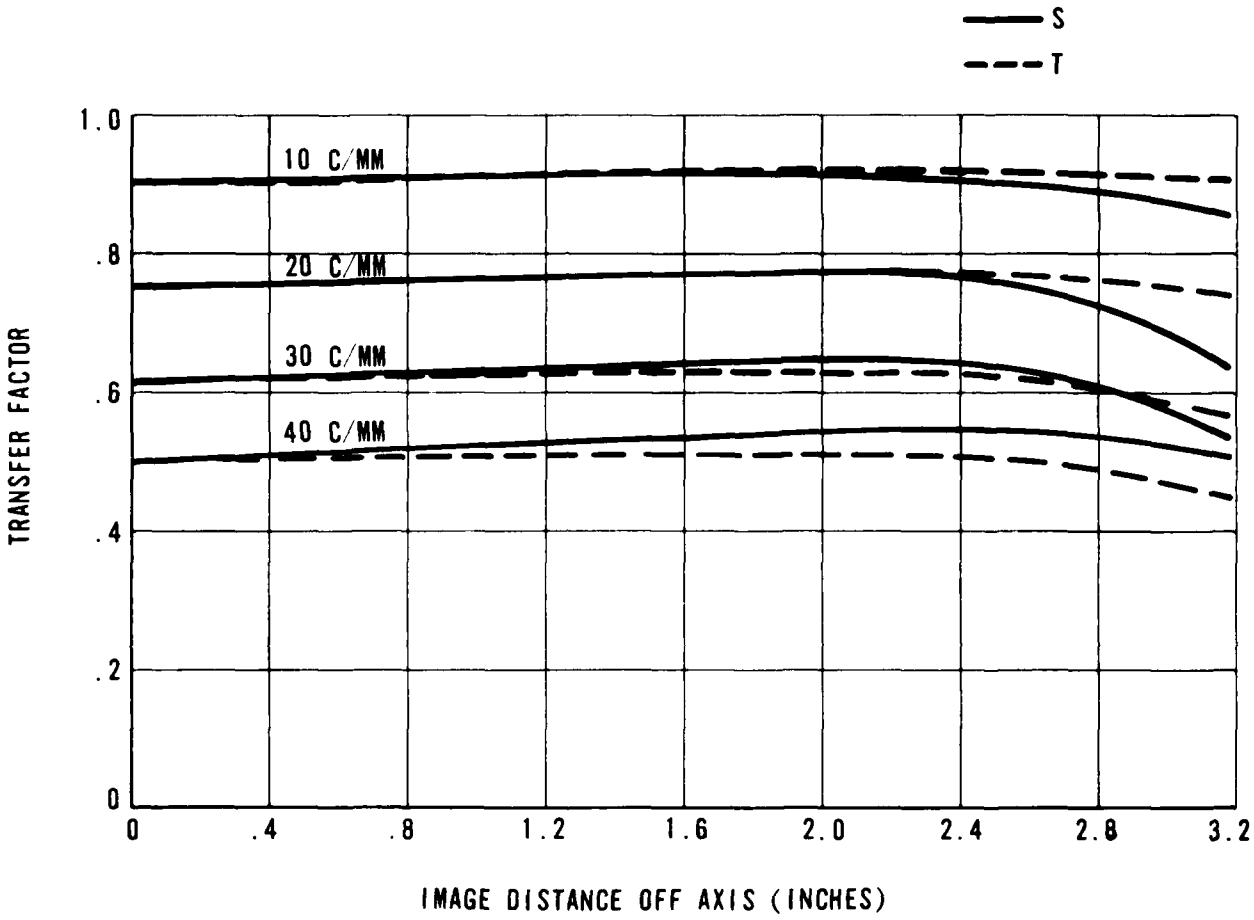

FIGURE 3.12 18-INCH FL, f/4.0 PAN-X SPECTRUM

MECHANICAL BUTTING	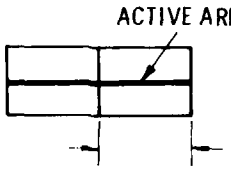	1) ACTIVE LENGTH EQUALS PACKAGE LENGTH 2) MOST DESIRED METHOD 3) DEVICES DO NOT EXIST
OPTICAL BUTTING (BEAM SPLITTING)	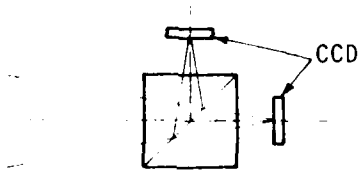	1) 50% MIN LIGHT LOSS 2) EASY TO IMPLEMENT 3) SPECTRUM AND POLARIZATION PROBLEMS
OPTICAL BUTTING (ALTERNATING MIRRORS)	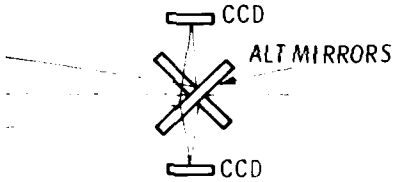	1) FULL LIGHT USE 2) OVERLAP PIXELS 3) ADDITIONAL CIRCUITRY FOR SIGNAL ADDITION
ELECTRONIC BUTTING (TIMED BUTTING)	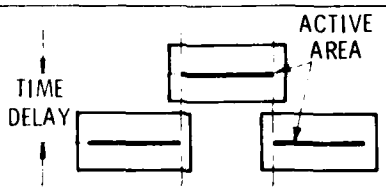	1) REQUIRES LARGE SIGNAL STORAGE CAPACITY 2) HIGHEST AIRCRAFT STABILITY REQUIREMENT

FIGURE 3.13 BUTTING METHODS

Unfortunately, all of the linear arrays available today are constructed in such a way as to preclude the possibility of mechanical butting. These arrays (such as the Fairchild CCD131 and CCD121) have electronic processing circuitry at one end of the array which prevents the potential of butting the end pixels of two consecutive devices. Also, these same devices are all mounted on substrates which are much longer than the optically active length of the array.

There is currently one development program in process (Itek) to produce CCD arrays that can be mechanically butted. If and when the development is achieved, there is no way of knowing what its availability will be to potential users. Therefore, the possibility of employing the mechanical butting concept is considered the least likely candidate for any focal plane developments in the near future.

Optical Butting - Beam Splitting

Any CCD whose total physical length is less than twice as long as its "active" length is a candidate for optical butting schemes. Devices that meet this requirement are Fairchild's CCD121, CCD122, CCD142 and CCD143.

The optical butting technique consists of building two physically separate arrays (each having every other subarray) and creating the apparent butt by use of some optical technique. One such technique is conventional beam splitting. A beam-splitting optical component is employed in the rear optical path of the system objective lens, creating two simultaneous identical images of the scene in two physically separate locations. Each of the two alternating arrays is located at one or the other image and mechanically adjusted until they appear to form a single contiguous long linear array as seen through the objective lens.

This scheme is practical and workable from a mechanical standpoint and creates no complications to the electronic processing of the signals. The main disadvantage to this scheme is the inherent minimum 50 percent light loss created at the beamsplitter by division of amplitude to create two

simultaneous images. When compared to the mechanical butting technique, the beam-splitting technique comes at a cost of at least 50 percent signal attenuation. While not eliminating this technique from further consideration, the significant light loss does limit the operating envelope in which such a system might be successfully employed. Finally, because beamsplitters are not perfectly neutral, either spectrally or in polarization, it can be expected that signature bands will be apparent in the imagery. Such bands are at best distracting and at worst hindrances to image interpretation.

Optical Butting - Alternating Mirrors

Another method of creating an optical butting (apparent butt) of CCD arrays is to use an array of small mirrors, constructed and positioned to reflect along linear image into sections directed toward the CCD arrays which are physically separated. The configuration of the separate arrays would be somewhat similar to the other optical butting technique, two linear arrays with alternating CCD arrays in each.

While this method of optical butting does not have the inherent light loss attendant with beam splitting, it does have illumination problems in the pixels immediately adjacent to the junction between two consecutive arrays as shown in figure 3.14. Since each separate array is served by its own mirror section, the light cone that is converging toward the end pixels is intercepted by two adjacent mirrors and sent in two different directions. The number of pixels involved is dependent upon the f number of the lens and the physical distance between the CCD arrays and the alternating mirror array. If left in a configuration of butting the end pixels of consecutive arrays, the collected signal at each end pixel would be (at best) 50 percent of the collected signal in the central portion of each array.

The problem at the ends can be partially overcome by an overlapping technique at each junction. Instead of butting the end pixels of consecutive arrays, the individual arrays are spaced closer to permit an optical overlap of N pixels at each array junction, N being dependent upon the specific system layout. The signals of these N pixels at each array end are then electrically added to their corresponding N pixels in the adjacent array, in effect, collecting all of the signal available.

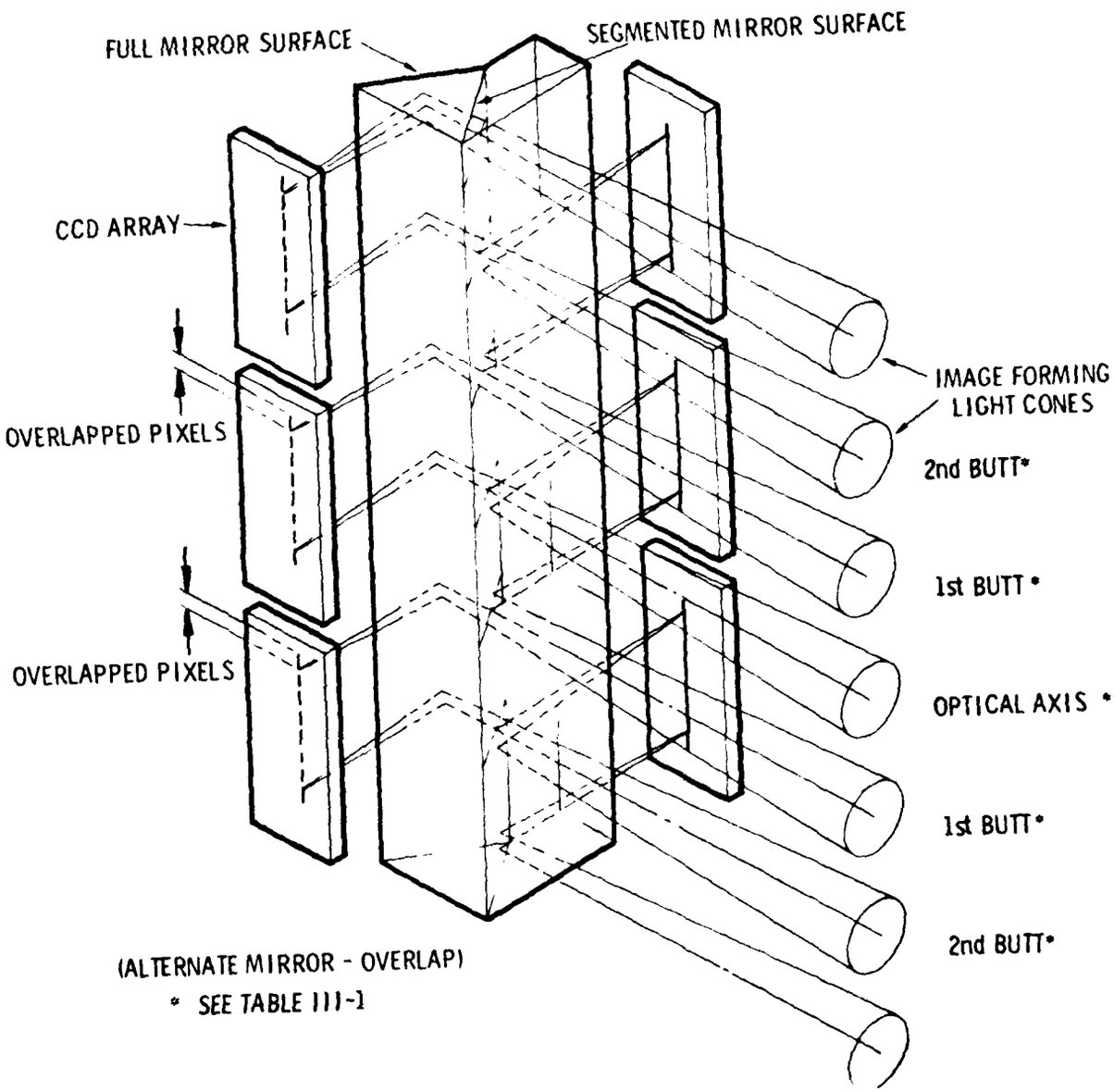

FIGURE 3.14 OPTICAL BUTTING SCHEME

This scheme is entirely workable but does have a few undesirable characteristics. When adding the signals of the N end pixels in consecutive arrays, the noise at each device is also being added. Therefore, the S/N ratio at the junctions is not equal to that near the center of each array where the entire signal is collected by only one device. However, the S/N ratio of this configuration is 2X better in the array center and 1.4X better at the array ends when compared to the beam-splitting approach.

This improvement in the S/N ratio comes with the expense of additional circuitry to store and perform the signal addition.

Electronic Butting

In a scheme called electronic butting, no attempt is made to perform either mechanical or optical butt between consecutive arrays. Instead, each of the arrays is individually located in the focal plane of the lens, correctly located with respect to the length of the array, but staggered (L-R-L-R, etc.) in the direction of scan. The stagger spacing represents a time delay between the lead and aft portions of the full array. The signals from each integration period of each subarray in the lead set of arrays is electrically stored until the scene has traversed to the aft set of arrays, at which time the signals from both sets of arrays can be processed to form a single continuous stream of data representing a continuous line of imagery.

The obvious disadvantage of this approach is the large amount of signal storage required to hold the information from one-half of the total array until it can be interspaced with the information of the other half. Typical storage capacity for a 5-inch format picture would be several megabits, dependent upon the stagger spacing actually achieved in the final configuration.

The most severe disadvantage in the electronic butting scheme is the stability requirement imposed on the sensor system during the time of information storage. If stability is not maintained, there is a less of picture continuity when the signals are joined at the ground station, resulting in duplicate imagery at one end of each subarray and a holiday at the other ends.

In order to be able to compare and contrast two of the techniques, it is proposed that both CAI's array using alternating mirrors and the GFE array using beam splitting be evaluated in the demonstration. Despite the fact that the latter array is of insufficient length to cover the 4-1/2-inch format, it is a reasonable candidate for certain implementations and it illustrates the simplicity of an effective mechanical butt in that the active areas are apparently butted end to end. The cost of such a test is minimal because both arrays use Fairchild 121 CCD's so that common drive circuitry can be used, and both have similar physical dimensions. The electronics necessary to add overlapping pixels for CAI's array need only be programmed for zero pixel overlap.

The cost of allowing interchangeable focal plane arrays would be about $ 5000 greater than using just one, exclusive of the increased in flight test time.

As was pointed out above, alternating mirrors split the light cone in the region of the butts. To assure collection of all available light, the CCD's are effectively overlapped. Because the mirrors must be located physically in front of the image plane, the position and length of the overlap regions vary with focal length and lens speed. The formula for computing the total length of overlap in pixels (N_L) is given by:

$$N_L = \frac{F/f}{(F/S-1)\,P}$$

where:

F = focal length of the lens

f = f number of the lens

S = optical distance from the mirrors to the image plane

P = dimension of a pixel

Given a base design for one lens, using interchangeable lenses not only varies the length of overlap, but shifts the center of the overlap region. The formula for this center shift (C) is given by:

$$C \quad \frac{a_o\,(1 - F'/F)}{\frac{F'}{S} - 1}$$

where:

F' = focal length of the new lens

a_o = distance in pixels of the butt center from the optical axis

Table III-1 gives the calculated results for various base designs of the overlap length and center shift for each of the lenses considered.

Clearly, using a 6-inch fl, f/2.8 lens poses the most difficulty in both overlap length and center shift. A base design for an 18-inch fl, f/4 shows minimal problems using a family of 12, 18, 24 and 36-inch fl lenses.

CANDIDATE CAMERAS FOR SFP INSTALLATION

The KA-50 family of cameras was developed and designed to U.S. Navy specifications and manufactured by CAI. Hence, recommendations for engineering changes to the cameras to incorporate the E-O array will be fully documented as to the mechanical, optical and electrical changes and repackaging required, and also as to the effect on operation of the camera.

To minimize expense and shorten development time, existing material and designs are to be used where possible to expedite the fabrication of a demonstration system which will be used for flight evaluation of the concept.

These considerations mean that the camera to be modified should be capable of mounting either or both of the existent E-O array assemblies in their final packaged configuration.

The CAI assembly with six 1728 CCD arrays is being developed as an E-O back for the 18-inch fl KA-91 panoramic camera. The KA-91 E-O optical system is depicted in figure 3.15 and its video processing electronics module in figure 3.16. The E-O linear array assembly including prism, butting optics and CCD's is shown in figure 3.17, less PCB's, optical filters and provisions for cooling. Figure 3.18 shows the GFE array.

TABLE III-1

OVERLAP LENGTH AND SHIFT FOR VARIOUS DESIGNS AND LENSES

LENS	OVERLAP LENGTH N_L (PIXELS)	OVERLAP SHIFT (1ST BUTT / 2ND BUTT)* (PIXELS) BASE LENS 6", f/2.8	12", f/4	18", f/4	24", f/3.5	24", f/5.6	36", f/5
6", f/2.8	243.67	0/0	45.46/90.92	60.68/121.35	67.27/134.54	70.33/140.67	77.50/155.00
12", f/4	165.75	-41.97/-83.95	0/0	14.74/29.48	21.79/43.57	22.78/45.56	30.12/60.25
18", f/4	164.20	-55.44/-110.88	-14.59/-29.18	0/0	7.19/14.39	7.52/15.05	14.92/29.84
24", f/3.5	186.79	-62.08/-124.16	-21.78/-43.56	-7.27/-14.53	0/0	0/0	7.43/14.85
24", f/5.6	116.74	-62.08/-124.16	-21.78/-43.56	-7.27/-14.53	0/0	0/0	7.43/14.85
36", f/5	130.15	-68.66/-137.32	-28.91/-57.81	-14.47/-28.93	-7.13/-14.25	-7.45/-14.91	0/0

OPTIMUM DESIGN: 18", f/4. BASE LENS

USE WITH 12", 18", 24", 36"

* REFER TO FIGURE 3.14

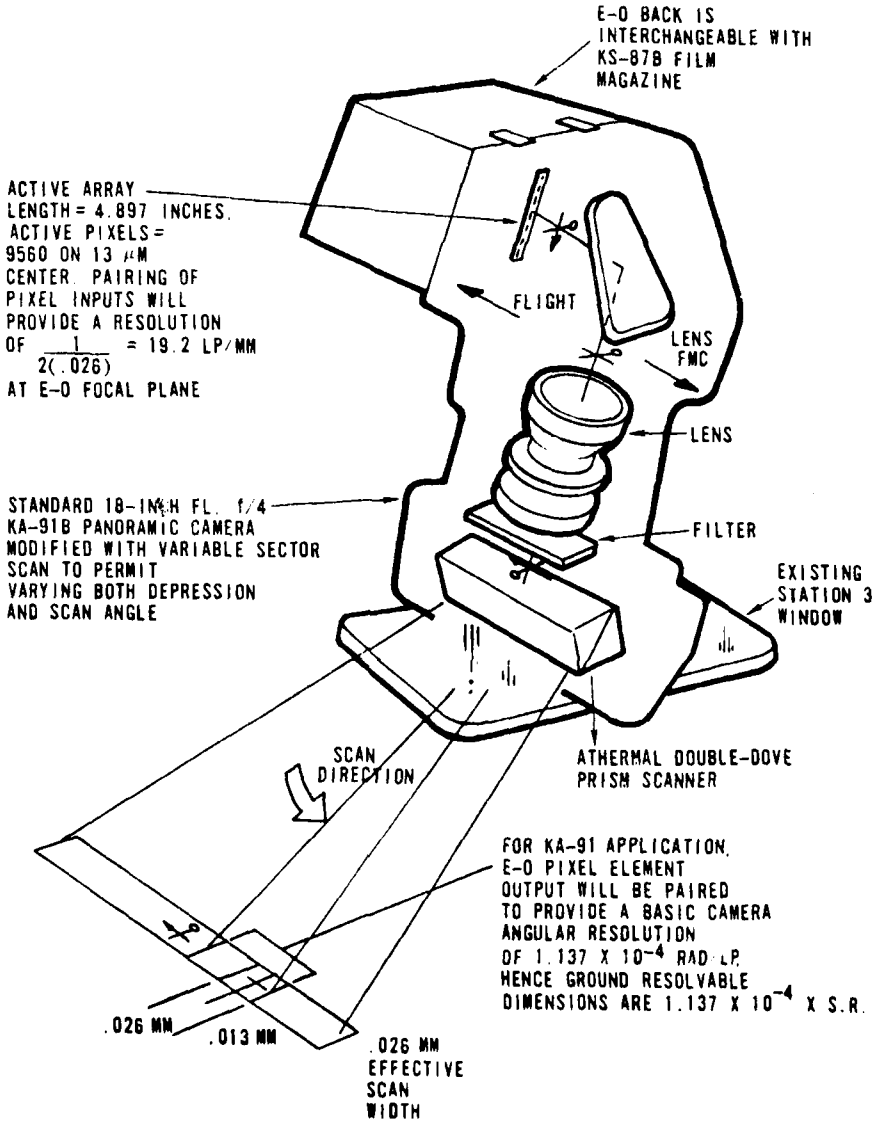

FIGURE 3.15 KA-91 E-O OPTICAL SYSTEM

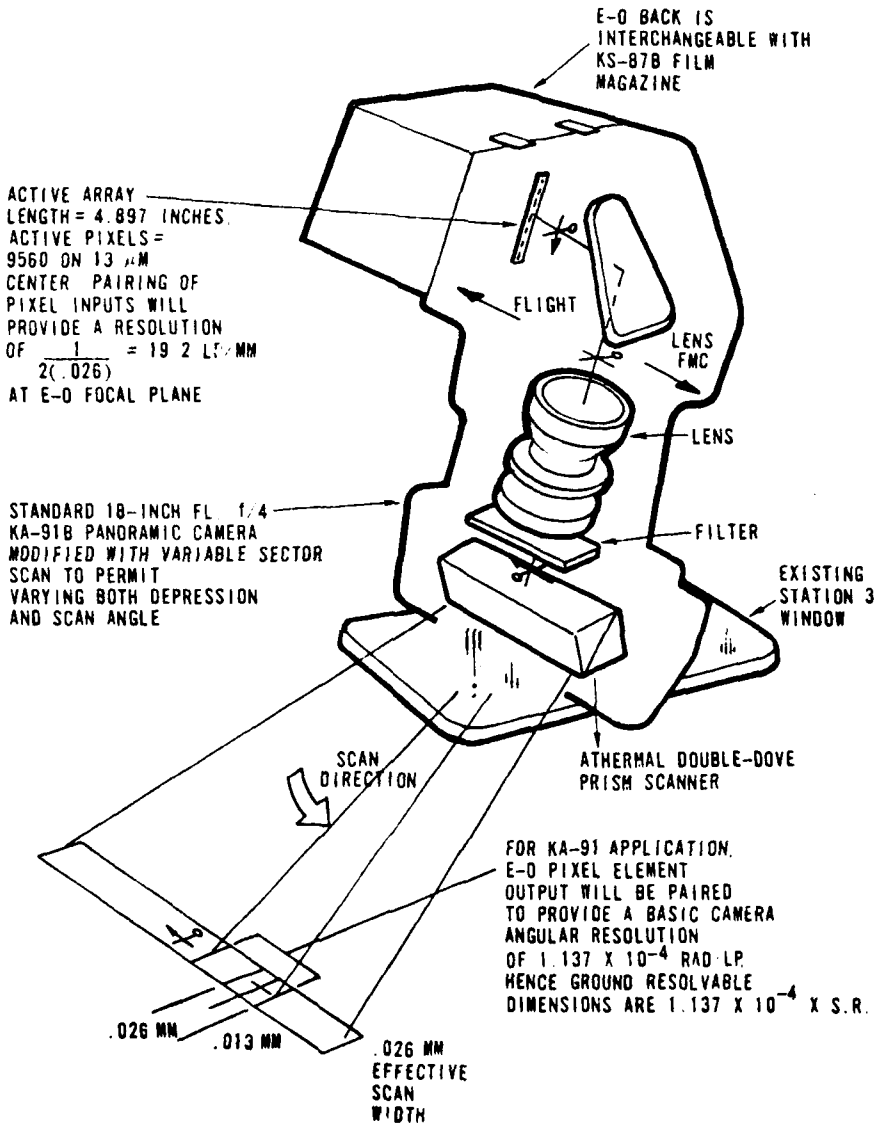

FIGURE 3.15 KA-91 E-O OPTICAL SYSTEM

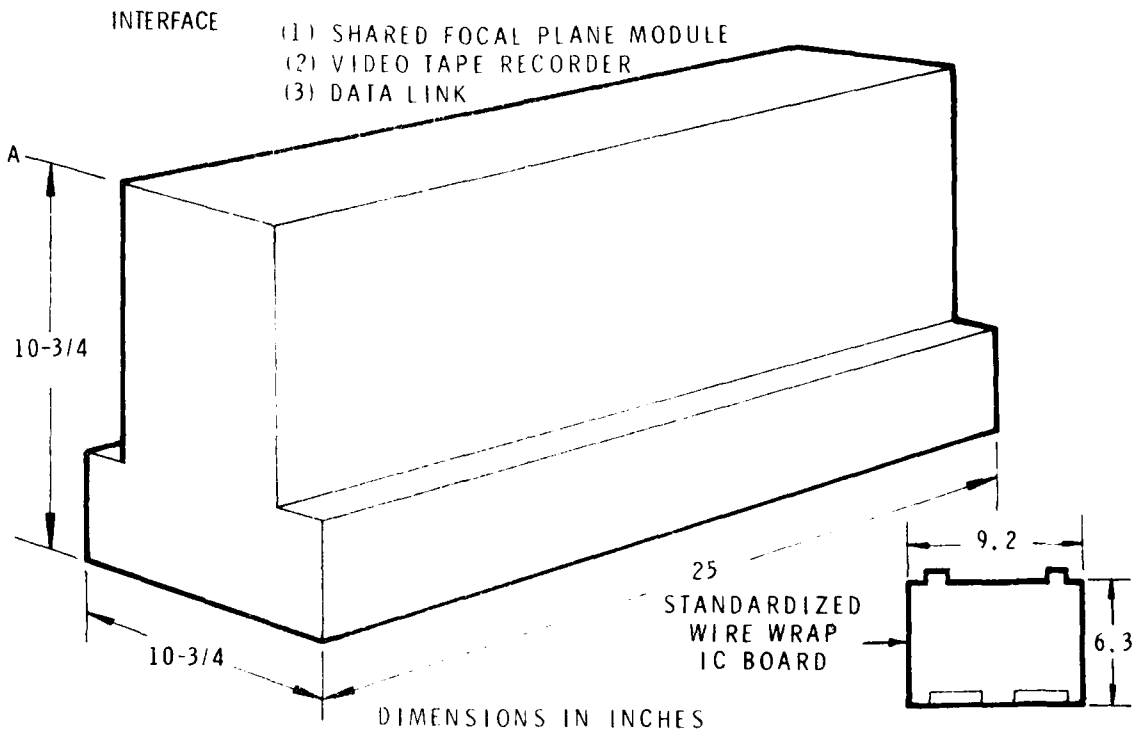

FIGURE 3.16
CCD LINEAR ARRAY VIDEO PROCESSING ELECTRONICS MODULE

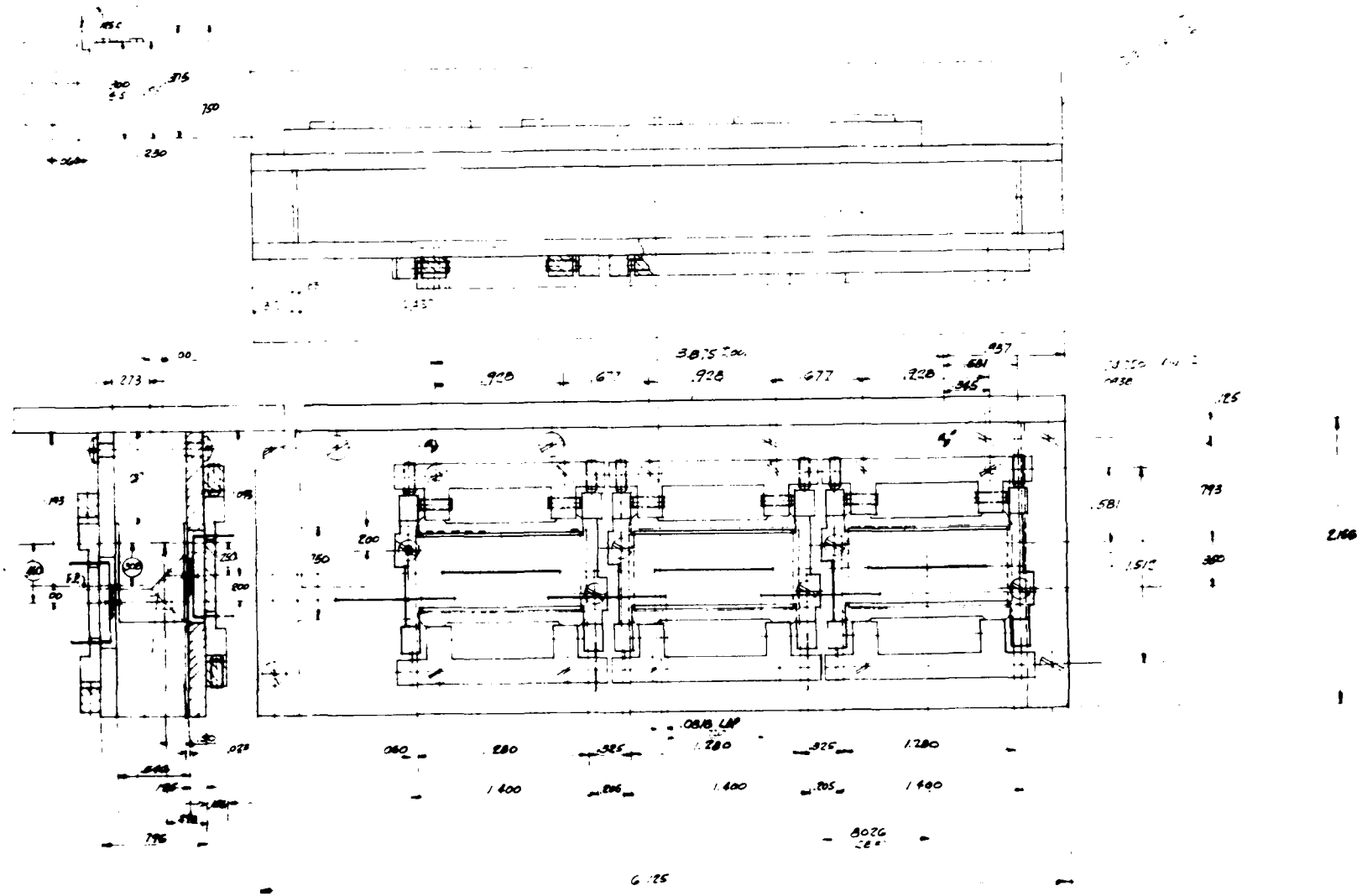

FIGURE 3.17 CAI'S SIX LINEAR ARRAY ASSEMBLY

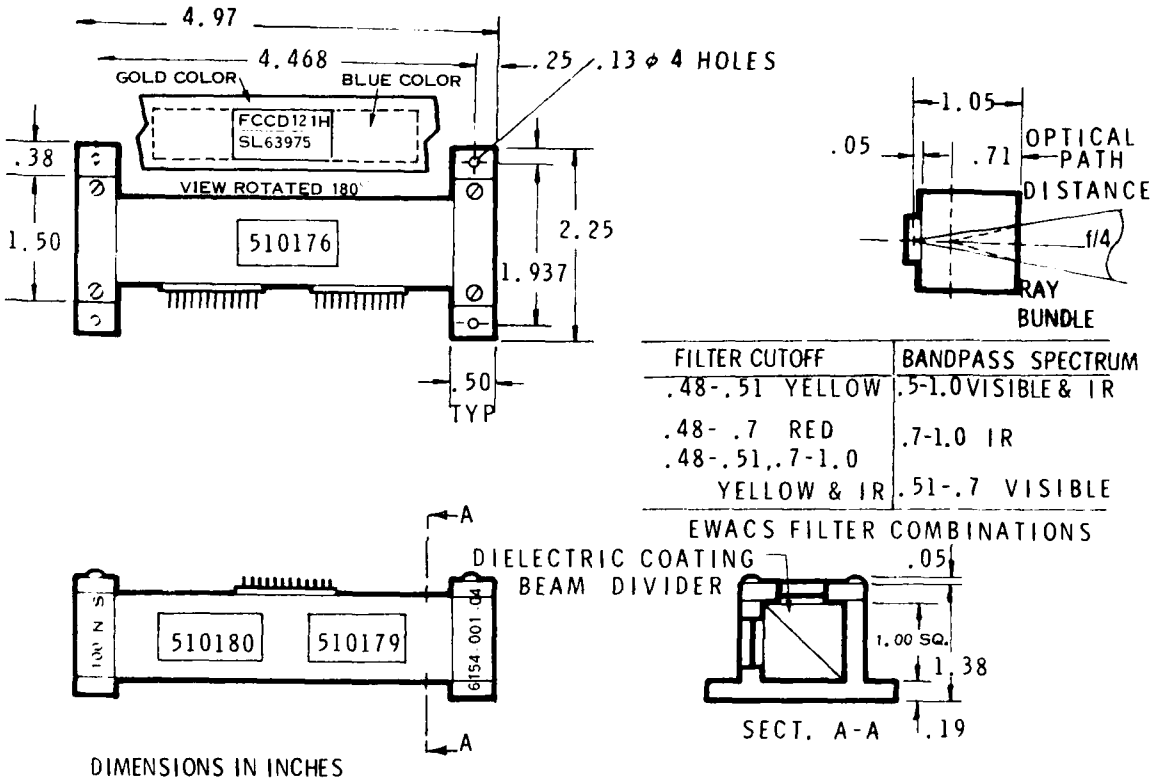

FILTER CUTOFF	BANDPASS SPECTRUM
.48-.51 YELLOW	.5-1.0 VISIBLE & IR
.48- .7 RED	.7-1.0 IR
.48-.51,.7-1.0 YELLOW & IR	.51-.7 VISIBLE

EWACS FILTER COMBINATIONS

FIGURE 3.18

U.S. NAVY FOCAL PLANE ARRAY ASSEMBLY PART NO 6150-04 S/N 001

The overall E-O assembly with ancillary electronics will be "T" shaped on the KA-91 with provisions for mounting a repackaged video module on its back. This basic sensor configuration becomes highly compatible with the SFP cameras through the addition of a mirror in front of the E-O array to intercept the ray bundle from the lens and repackaging the electronics in a configuration aptly described as a fork. The vertical stem of the fork containing the mirror and E-O array will be adjustable linearly to permit a sharp focus coplanar with the camera's focal plane. This package concept is depicted in figure 3.19.

Mechanical Configurations

Location of the E-O array within the camera itself presents several interface problems, some of which are depicted in figure 3.20. In the figure, location of the E-O array for several different positions is considered.

Position A, the most straightforward, consists only of positioning a mirror at some point behind the lens to reflect light off to the side and onto the E-O focal plane array. The object in this case is to leave the shutter assembly intact and use otherwise empty space in the lens cone. There are two disadvantages to this position. First, the mirror being so far from the image plane results in a large degree of vignetting of the film imagery. The second disadvantage relates only to the demonstration program in that this position involves modification to each lens cone which would be used.

Position B reduces vignetting to some extent by moving the mirror closer to the focal plane. The E-O focal plane assembly is still outside the shutter mechanism, but must be cocked to intercept the light. The modifications still occur in the lens cones and focusing is a more difficult procedure. However, it is an attractive solution for cases in which a single lens cone is to be used.

Position C leaves the lens cones unmodified, but instead involves the removal of a shutter motor. There is less vignetting in this case because the mirror is still closer to the image plane, but working inside the shutter housing does impose size constraints on the E-O focal plane assembly.

INTERFACE 1) 6 COAXIAL CABLES & POWER TO VIDEO PROCESSING MODUALS
2) COOLING AS REQUIRED
3) CAMERA FOCAL PLANE

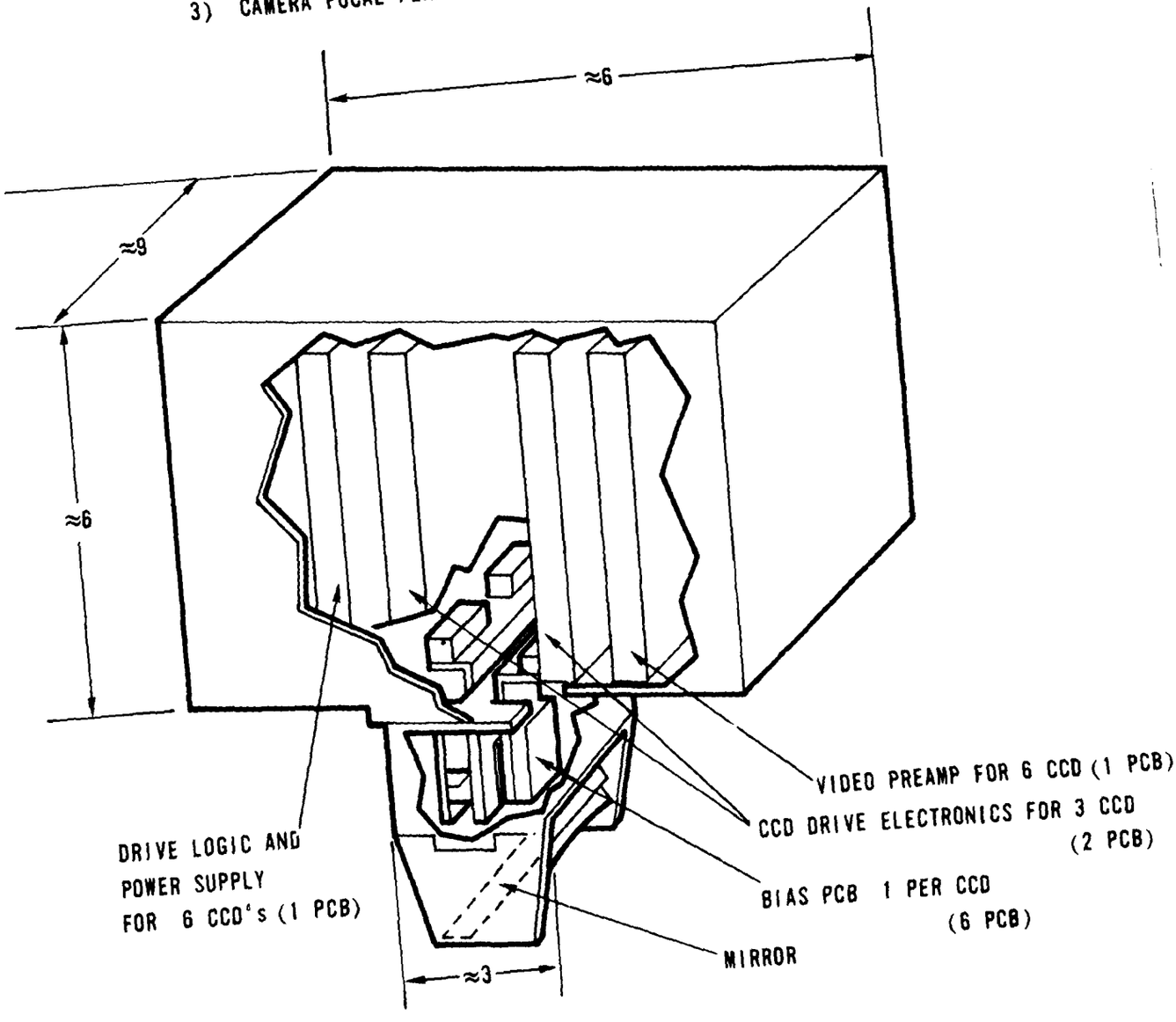

DIMENSIONS IN INCHES

FIGURE 3.19 PACKAGING CONCEPT FOR SHARED FOCAL PLANE ARRAY ASSEMBLY

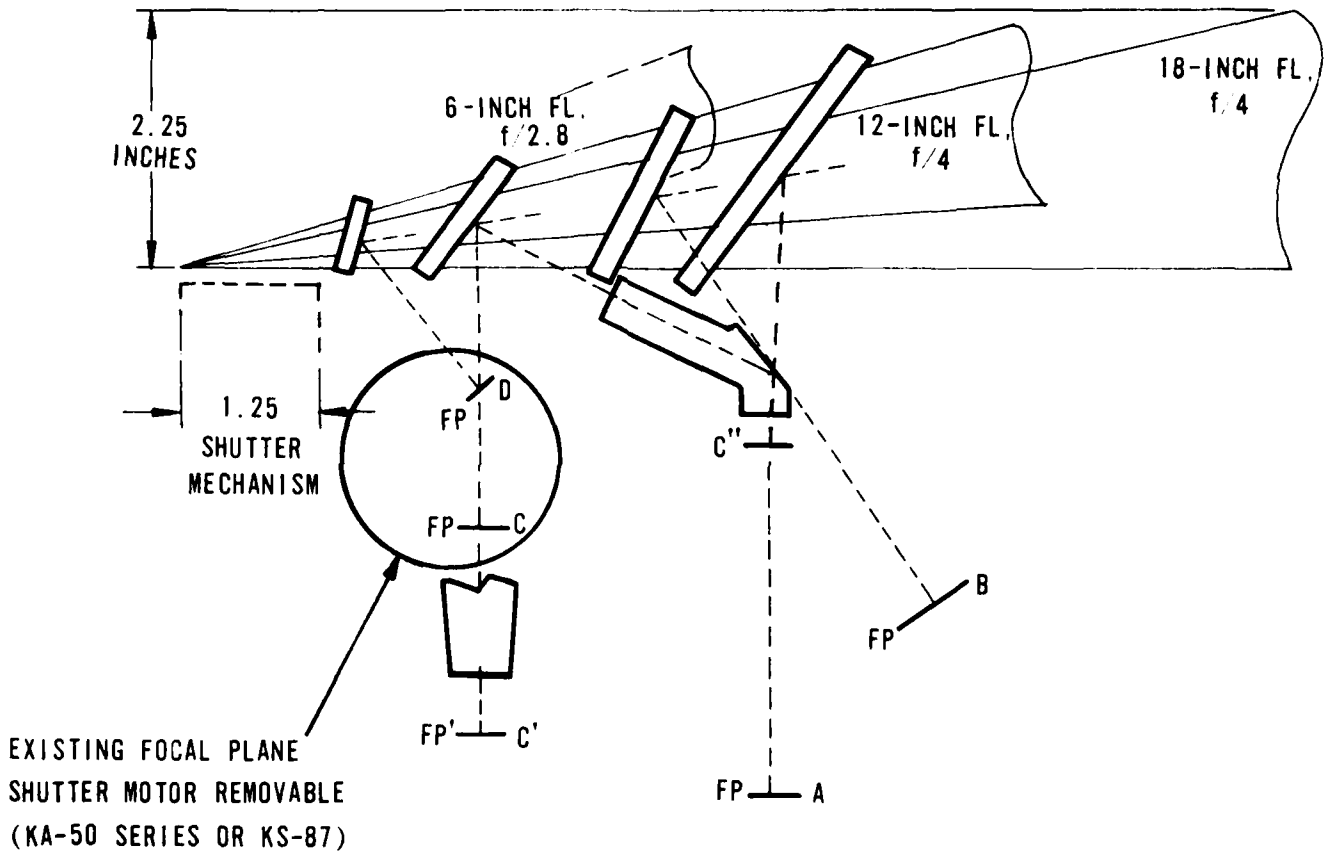

FIGURE 3.20 E-O LINEAR ARRAY POTENTIAL LOCATIONS

One possible solution would be to extend the optical path to position C' by the inclusion of a thickness of glass in the path. By so doing, the E-O assembly can be located entirely outside the shutter housing. Along the same line of reasoning is the possibility of extending the optical path and folding it around the shutter motor. This also has the disadvantage of modifying lens cones, as well as introducing optical degradation by using extra glass. The glass necessary to extend the path from C to C' is calculated as 5 inches of 1.7 index glass. The optical effects were examined and described earlier in this section. The conclusion is that such a scheme is not feasible.

Finally, it would be conceptually possible to move the mirror still closer to the image plane in order to further reduce vignetting and again cock the E-O focal plane as in position D. This is similar to position B, with the attendant focusing problem, as well as an unacceptably harsh constraint on physical size as the E-O focal plane as presently configured. In the future, it would be worthwhile to redesign the E-O focal plane with the intent of allowing mechanical positioning as close to the film focal plane as possible.

One concept which was quickly discarded was to place a beamsplitter across the entire cone of light. This cuts light to both the film and E-O array in half, as well as wasting a large fraction of the light directed toward the latter. Furthermore, for shorter focal length lenses, there is insufficient space between lens and image plane to accomplish this.

For the positions in which a shutter motor is removed, the frame cycle rate is reduced to 2/s such as is used on CAI's 66-inch fl LOROP camera. Because these positions bring the film and E-O image planes into close proximity and thus minimize vignetting, it is otherwise a very attractive solution. For operational systems, the possibility of maintaining this position and regaining the high shutter speed with the use of recently developed samarium cobalt torque motors and possibly lower mass curtains should be seriously considered. Because of the packaging of the shutter assembly for the KA-50, the removal of the trailing edge motor is preferred as the easier modification.

Figures 3.21 through 3.24 illustrate two preliminary design layouts, each involving modifications to existing lens cones and the first removal of a shutter motor. Figure 3.25 shows the approach wherein the optical path is extended to allow locating the E-O assembly outside the shutter housing. Figure 3.26 shows the preferred approach for the demonstration system. Note that to equalize optical paths, the effective location of the E-O array has been located 1/4 inch inside the film format edge, which results in slightly greater vignetting of the film and slightly better performance at long ranges for the E-O imagery. In addition, the E-O array, because of its physical length, is offset from the film format by 5/16 inch at the top and extends approximately 3/4 inch below the film format. Finally, the whole array assembly protrudes 1/16 inch beyond the shutter housing, thereby necessitating a new casting or some extension of the housing to enclose the assembly. Figure 3.27 illustrates the preferred approach for use with a bent 18-inch fl lens in a future more operational demonstration. Here the frame rate is restored by not removing a shutter motor. Instead, a hole is milled through the existing mirror housing, support plates epoxied in place and the E-O assembly inserted. The electronics immediately adjacent to the focal plane assembly are now remotely located a few inches away on the side of the mirror housing. This configuration allows using the camera in a pod and puts the E-O array at the leading edge of the film format.

Optical Compatibility

A preliminary review of photo format for each of the lenses with the E-O sensor and mirror assembly in place revealed the following characteristics for the 4-1/2 x 4-1/2-inch format:

	Lens Focal Length		
Percent	12 inches	18 inches	24 inches
Unaffected format areas	77	79	83
Vignetted area	23	21	17
One stop vignetting	14	13	11
Total vignetting	66	6	6

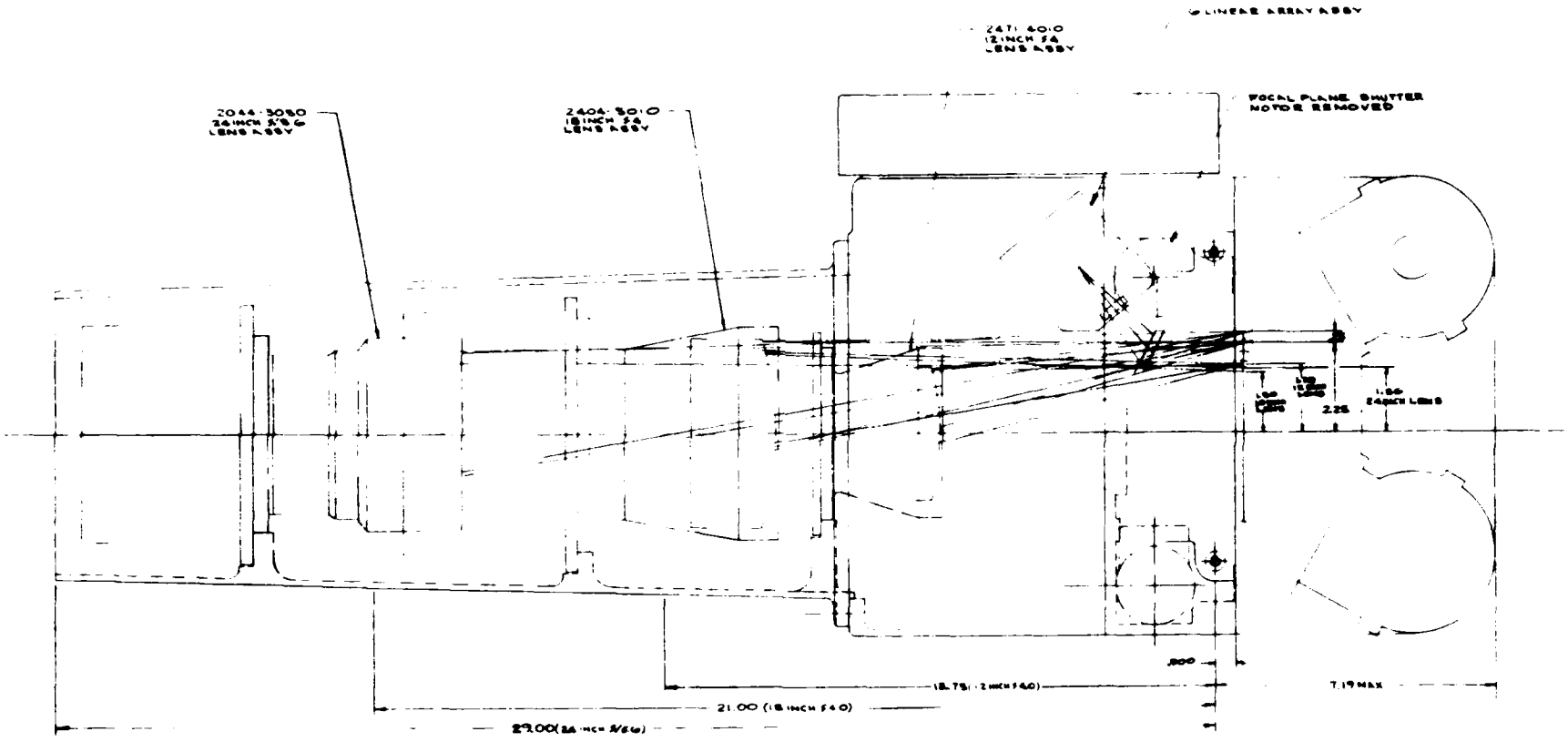

FIGURE 3.21 KA-50 SFP CAMERA

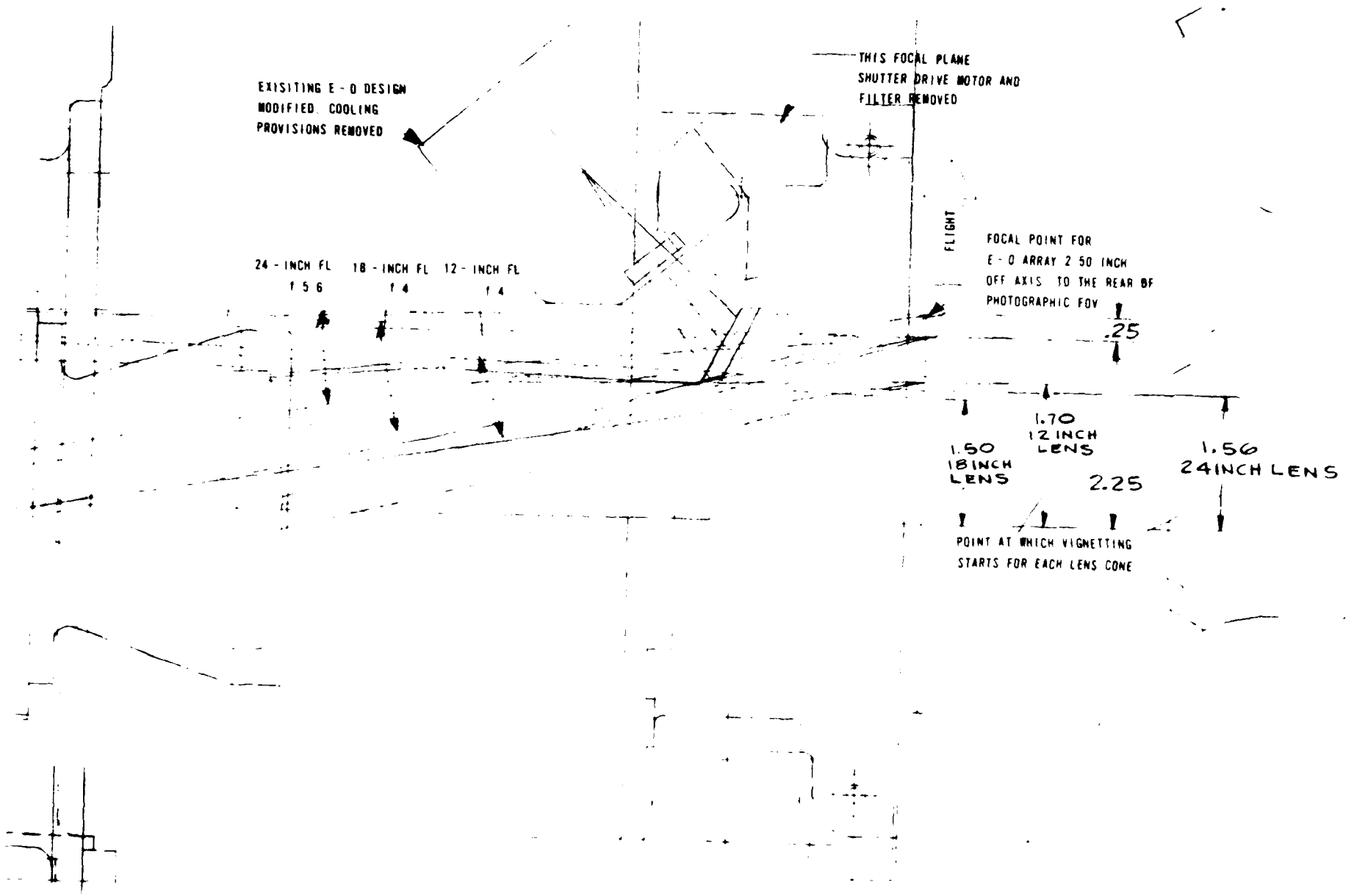

FIGURE 3.22 KA-50 SFP CAMERA

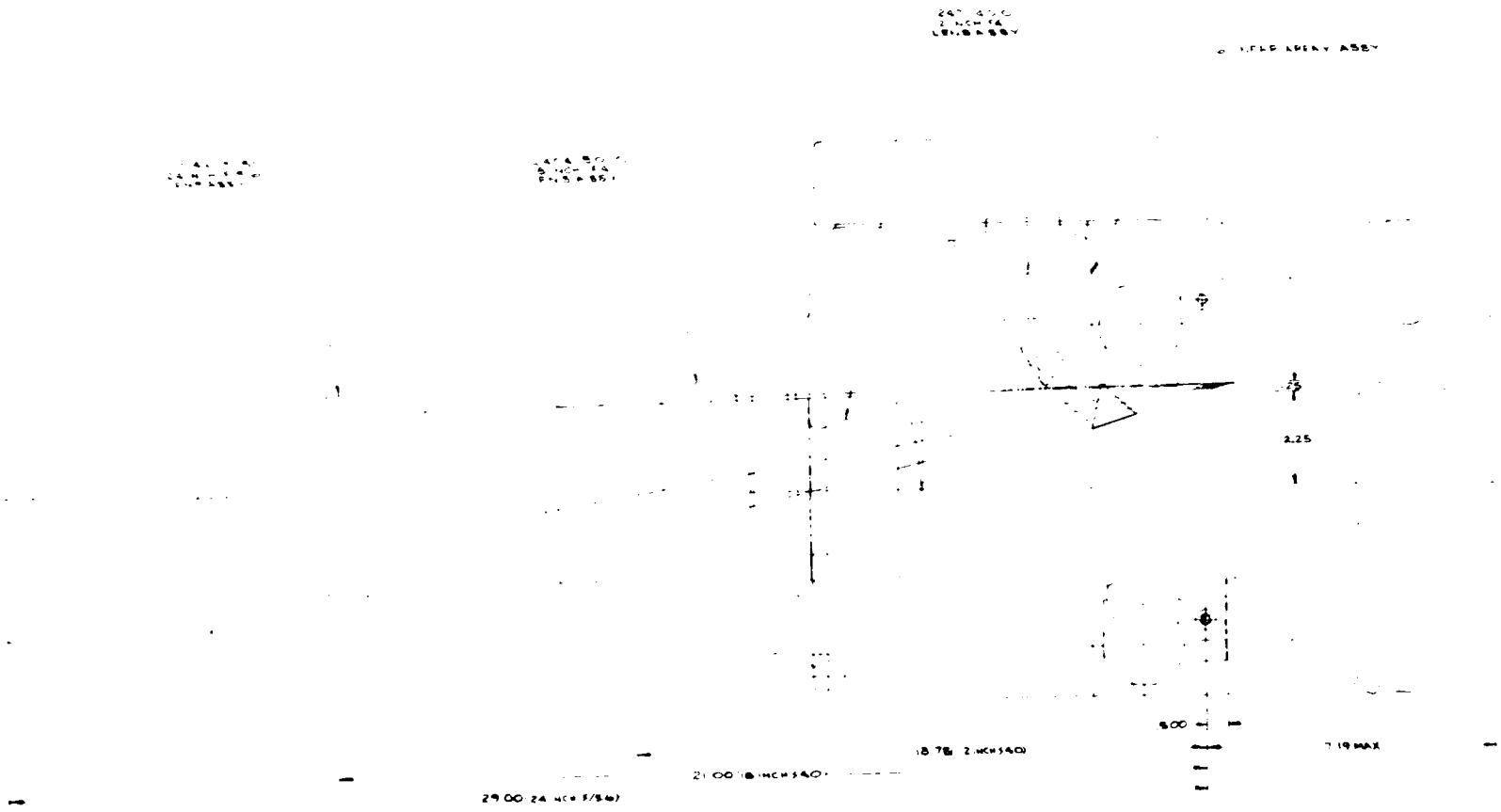

FIGURE 3.23 KA-50 SFP ALTERNATE DESIGN

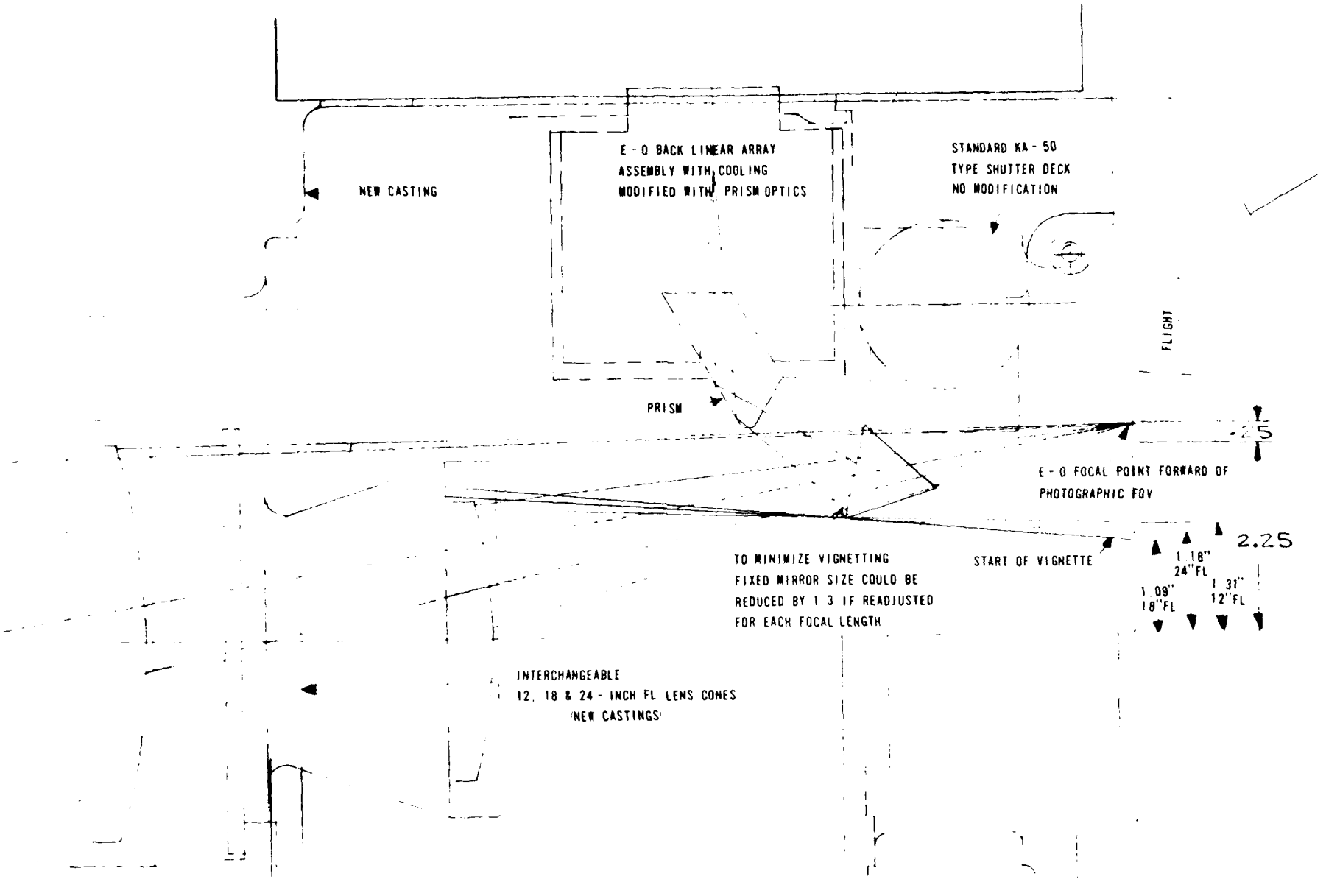

FIGURE 3.24 KA-50 SFP ALTERNATE DESIGN

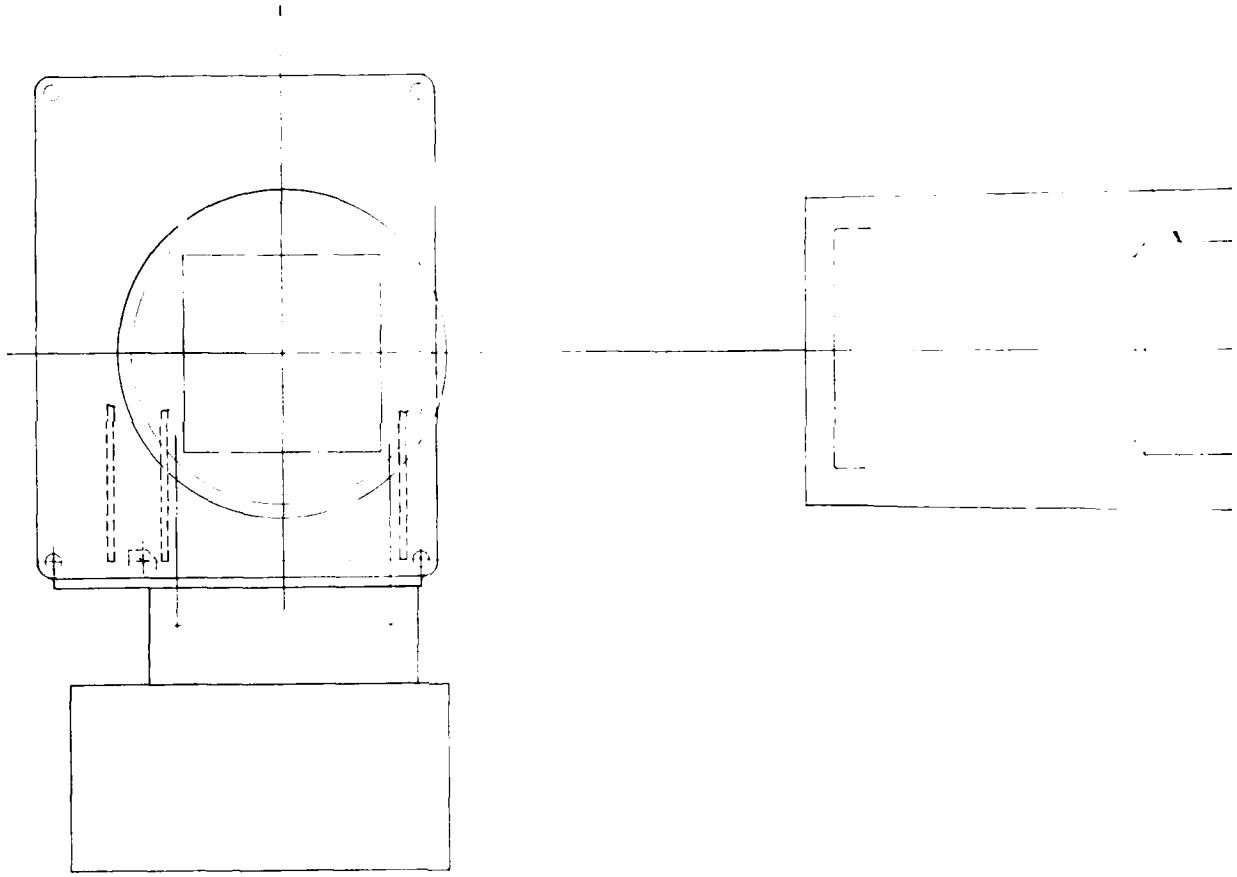

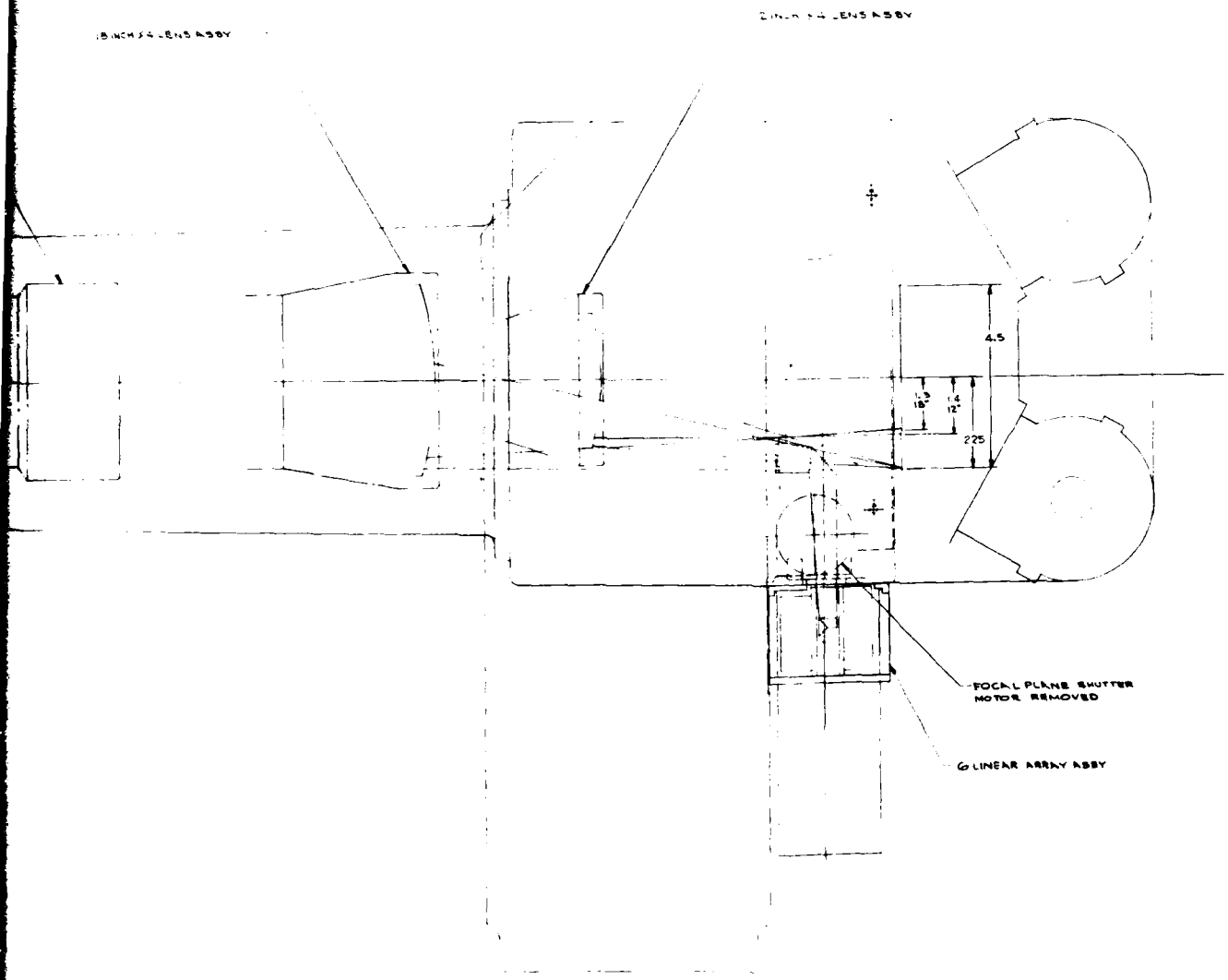

FIGURE 3.25

SFP CAMERA WITH EXTENDED OPTICAL PATH TO LOCATE E-O ASSEMBLY OUTSIDE SHUTTER HOUSING

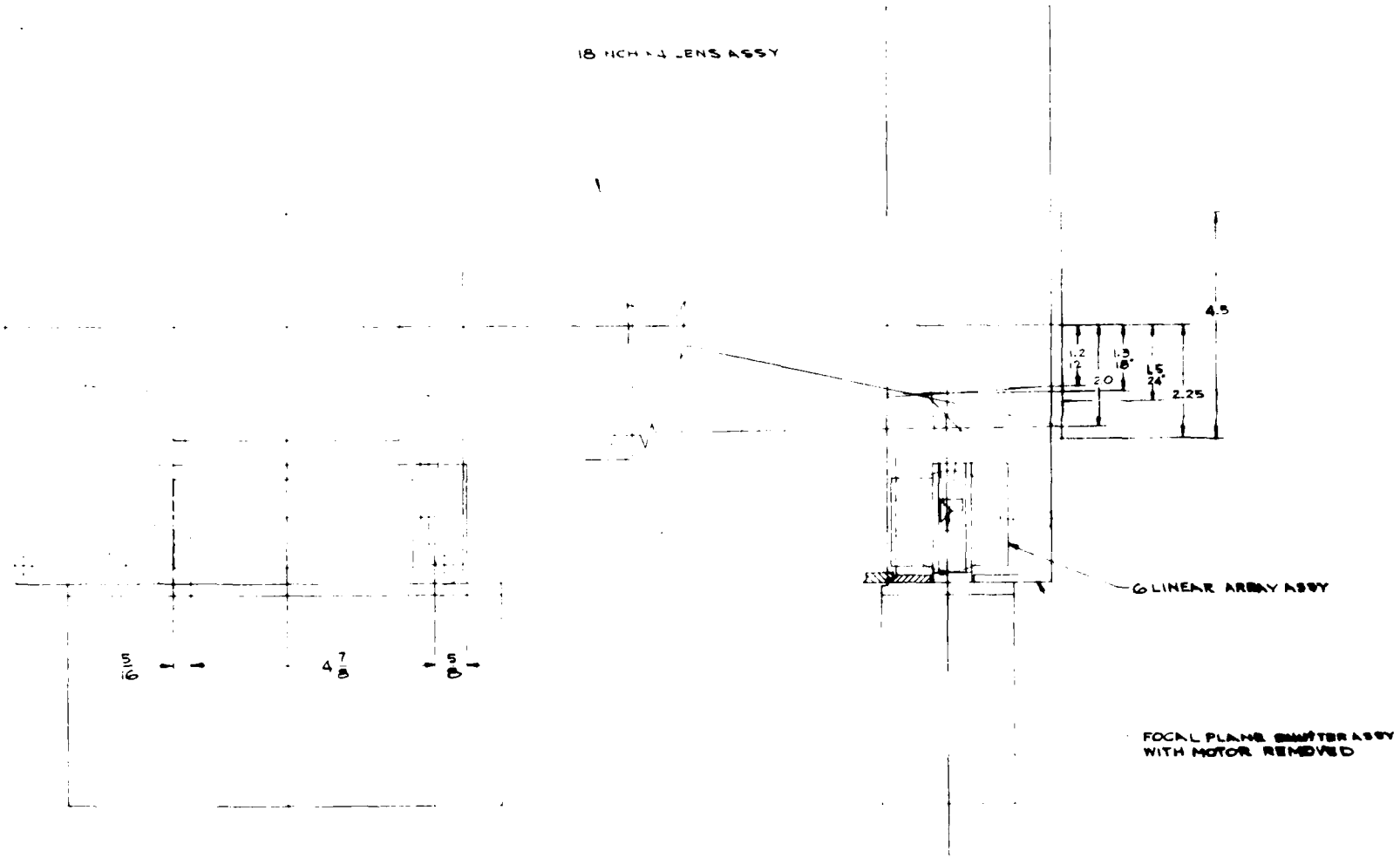

FIGURE 3.26 SFP CAMERA WITH E-O ARRAY INSIDE FILM FORMAT EDGE

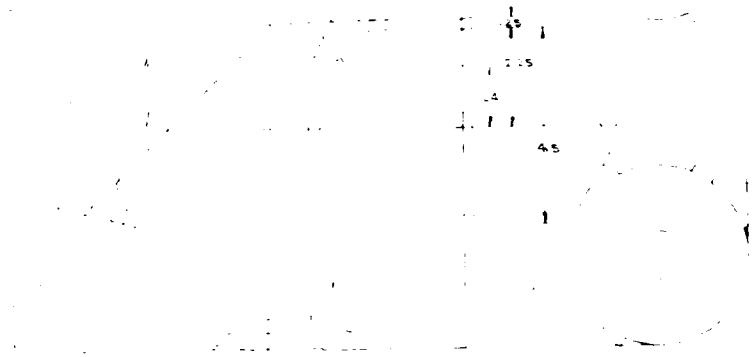

FIGURE 3.27 SFP CAMERA WITH BENT 18-INCH FL LENS

E-O Configuration

Although the CAI and the GFE E-O arrays are completely different, an approach which would allow either assembly to be used with common electronics is obviously very desirable for the flight demonstration.

A look at both assembled E-O configurations reveals that the overall cross sectional area for either approach is probably quite similar. Either assembly, complete with mirror, would appear to be compatible with the fork-shaped modular approach.

Figures 3.28 and 3.29 indicate how both assemblies could possibly be mounted interchangeably if required.

CAI's electronics to handle the addition of overlapping pixels currently limits the integration time to 576 μs. While improved memory technology in the next year is expected to shorten this time, the performance analyses presented herein use this figure. The system line rate is simply the reciprocal of integration time and thus 1733 lines/s. At very long ranges, it may be useful to allow the integration time to increase. However, sampling geometry shows that useful MTF's at Nyquist frequencies are not obtained if the image motion is greater than 1/2 to 3/4 pixel per integration. Hence, to obtain high resolution imagery, this integration time should be fixed for velocity-to-range ratios greater than .581 to .871 divided by the focal length in inches. For a 300-kn velocity, this means ranges less than 7000 to 10,000 times the focal length in feet. Clearly, for the 1 to 3-ft focal lengths under consideration, there is little need to consider longer integration times.

In each line, CAI's focal plane array contains six arrays less the length of pixels used in overlap. This calculates to 9548 pixels/line for an 18-inch fl lens. The pixel rate is then 16.6×10^6 pixels/s for a bandwidth of 8.29 MHz. The coverage afforded is 4.89 inches, which is almost 9 percent larger than the film format. As such, it allows some leeway for roll stabilization.

Because it is intended that no capital equipment be purchased for this study, rather they be furnished as CFE or GFE items, availability as opposed to cost is a driving factor in recommending particular models.

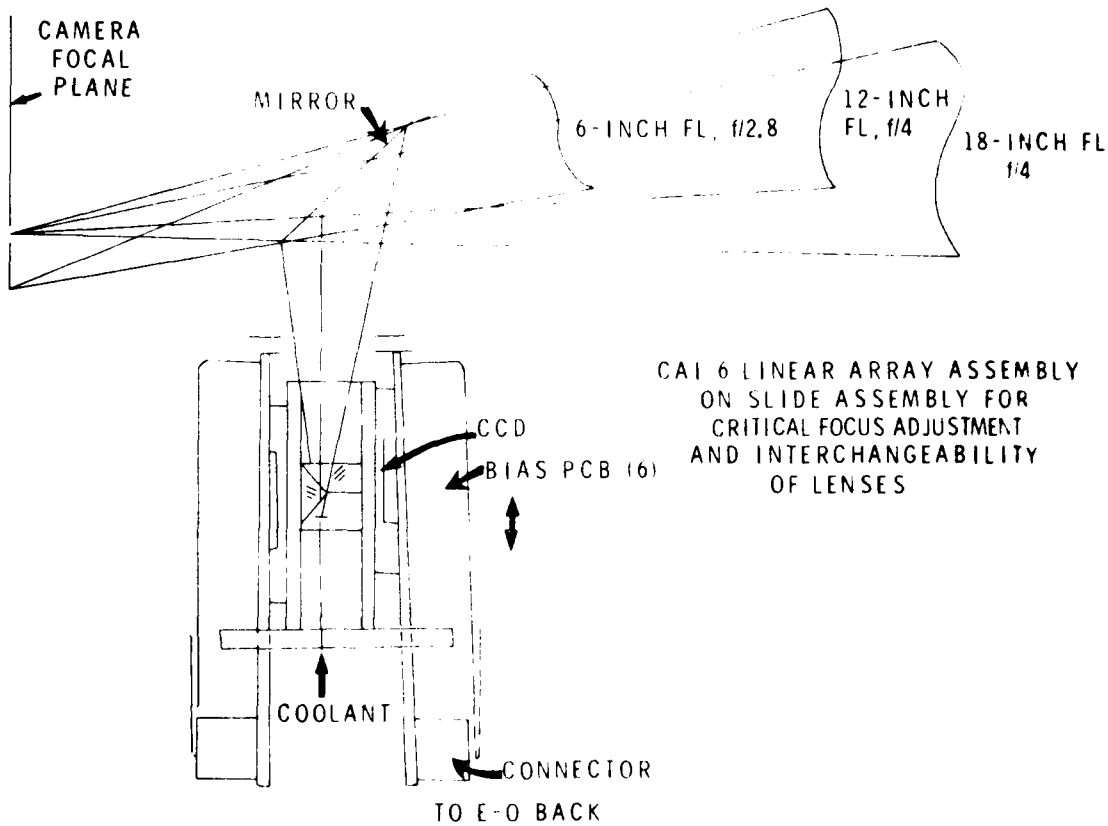

FIGURE 3.28 PROPOSED CAI E-O SHARED FOCAL PLANE

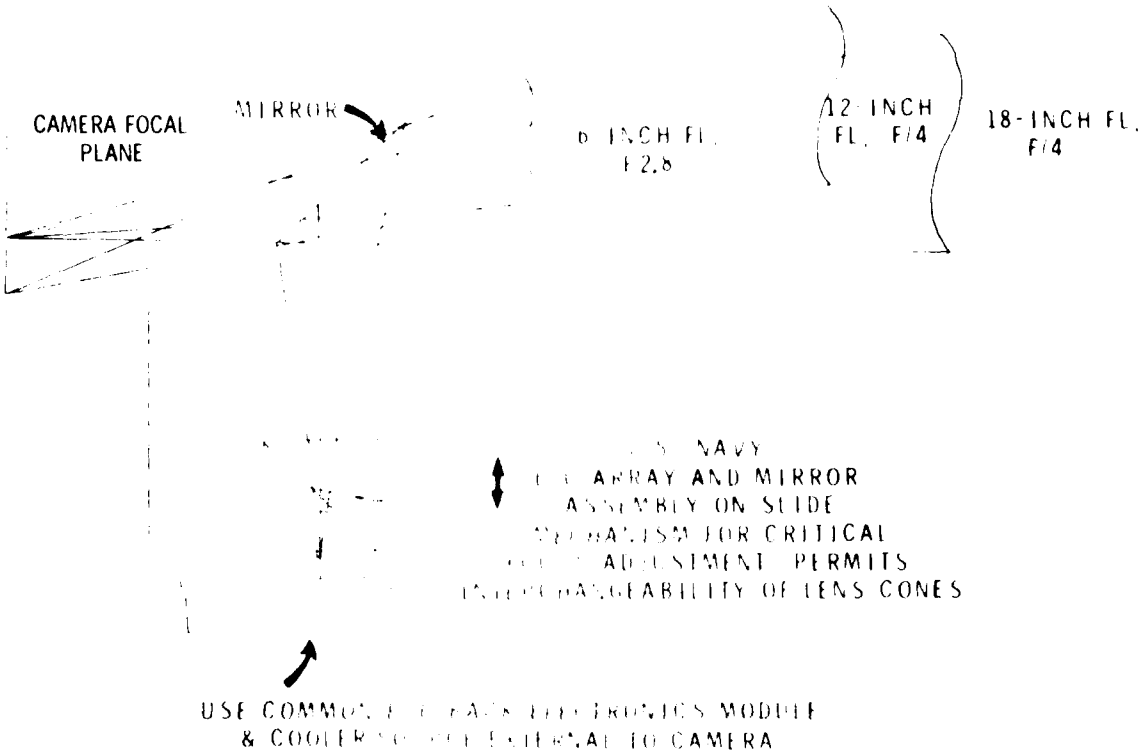

FIGURE 3 29 PROPOSED E O SHARED FOCAL PLANE USING GFE ARRAY

VTR REQUIREMENTS

An airborne video tape recorder (VTR) is required to provide storage of sensor imagery. This storage function must have the capability of recording the full sensor image resolution on a video line-by-line basis (pushbroom scanning), with two auxiliary data channels to record aircraft navigational data and video line and mission identification data. For the SFP system, the video bandwidth required is 8.3 MHz with an auxiliary channel bandwidth of about 20 kHz. It is desirable that the VTR have a recording time of at least 20 min, with 1 hour preferred.

Several operating modes are required of the VTR in an operational configuration:

- Airborne recording of sensor image data in real time.
- Immediate airborne playback of target pass imagery to verify coverage. This includes shortest possible start and stop time and tape wind times to permit efficient viewing of imagery.
- Airborne playback of all or selected imagery into a data link for transmission to an image interpretation/processing facility.
- Compatible playback of tape at an image interpretation/processing facility (on same or compatible VTR).

It would be useful, though not mandatory, that an operational VTR have a second slow playback speed. This would ease requirements on scan converter design for CRT display, and allow more flexible interfacing to available data links. Additionally, the VTR must be capable of operating with a line scan video format (as compared to TV raster scan) and meet airborne environmental requirements.

For the present demonstration system, the only essential requirements are video bandwidth (and auxiliary channel bandwidth), line scan compatibility and record/playback capability*. These three requirements, however, are sufficient to disqualify many VTR candidates as having insufficient bandwidth, dedicated operation with TV raster format or record only function in many portable units intended for airborne use.

* This, as such, is essential only from a cost standpoint. In demonstration, imagery would be played back at a ground facility. The airborne recorder can serve this purpose if it has provisions for playback operation. In any event, shortest possible start/stop and tape wind times are desired.

The use of a high density digital recorder in the present application is possible but not particularly practical for several reasons:

- Required interfacing in an essentially analog system.
- Because the system is essentially analog, the advantages of digital signal format, i.e., signal accuracy, wide dynamic range and low noise cannot be fully exploited.
- The generally higher cost, complexity and limited types of digital recorders.

Those remaining candidate recorders fall in the class known as universal instrumentation recorders. Of these, the RCA Advisor 152 has sufficient bandwidth, recording time and provides record/playback capability in a VTR designed for airborne use. However, its availability is limited and in CAI's experience, this recorder has demonstrated several inherent problems which make it an undesirable candidate. Some of these problems include mechanical abuse of the tape, a low signal-to-noise ratio and a format uncompatible for use with other machines.

Another candidate VTR is the Bell and Howell BH40. It is normally intended for ground use, but could be used in airborne demonstration tests as it has sufficient bandwidth and recording time. In this case, its availability is highly questionable. Apparently, Bell and Howell operated as a distributor for a foreign manufacturer and few, if any, units have been sold.

New designs to be available in 6 months to a year include a Bell and Howell BH70 with an 8-MHz bandwidth and an Arvin/Echo Science model 821 with a 12-MHz bandwidth. The former is essentially equivalent to the BH40, but with one less auxiliary channel and considerably longer start time. This last fact makes the BH70 unattractive for the zoom operation described below. The latter is a large, rack-mounted unit not suitable for operational use and not even practical for demonstration. There is an airborne version of this recorder under development, but it is not expected to be available for another 2 years.

Finally, the best choice is a dual channel RCA Advisor 62 with 6 MHz available in each channel. Being of reduced bandwidth, it would be necessary to split the video signal in order to maintain the design bandwidth and recombine the signal on readout. Nevertheless, it is a widely used VTR and thus its availability must be considered good. Furthermore, it is the only unit currently available which meets the requirements and can be expected to deliver good performance. Table III-2 lists the relevant characteristics for several recorders considered.

SCAN CONVERTERS

In discussing potential scan converters, it is appropriate to commence with a comparison of two technologies: digital versus analog. The following is a discussion of the relative advantages and disadvantages using a PEP 500 as an example of an analog version.

Resolution

Assuming present day technology, it appears that the state-of-the-art resolution for a practical digital scan converter is 512 x 512 pixels. This resolution is met with 100 percent modulation.

A PEP 500 analog scan converter is capable of much higher resolution. Princeton claims a resolution of 1350 lines/diameter. If we assume the standard 3:4 aspect ratio of a frame, we can achieve 1080 lines horizontal resolution by 810 lines vertical.

Speed

The speed of the digital scan converter is primarily limited by the memories used. This limitation can be overcome by using more complex I/O with buffer memory. A practical bandwidth would be 10 MHz.

The analog scan converter has a specified bandwidth of 28 MHz.

TABLE III-2
REPRESENTATIVE UNIVERSAL
INSTRUMENTATION/VIDEO VTR'S
LEADING PARTICULARS

MFG / CHARACTERISTIC	RCA ADVISOR 62B	BELL & HOWELL BH-20/40*	BELL & HOWELL BH-50/70	ARVIN/ECHO SCIENCE WRR-421
RECORDING TECHNIQUE	TRANSVERSE	HELICAL	HELICAL	HELICAL
TAPE: WIDTH	2" INSTRUMENTATION	1" $C_R O_2$	1" $C_R O_2$	1" GAMMA FERRIC-OXIDE
CAPACITY	8" NAB REEL: 10-1/2 NAB REEL OPTIONAL	10.5" NAB REEL		NAB 8, 10.5 OR 12.5-IN REELS
RECORD/PLAYBACK	BOTH	RECORD ONLY BH-20 RECORD/PLAYBACK, BH-40	RECORD ONLY, BH-50 RECORD/PLAYBACK, BH-70	BOTH
RECORD TIME	52 MIN 1 CHANNEL 26 MIN 2 CHANNELS 104-52 MIN W/10-1/2 REEL	160 MIN @ 4 MHz BW 80 MIN @ 8 MHz BW	2.7 HR @ 4 MHz BW 1.3 HR @ 8 MHz BW	60 MIN WITH 10.5-IN REEL
AIRBORNE/GROUND USE	BOTH	AIRBORNE, BH-20 GROUND, BH-40	AIRBORNE, BH-50 GROUND, BH-70	GROUND
NO. OF CHANNELS: VIDEO	1 OR 2	1	1	1
AUX	2	2	1	2
BANDWIDTHS: VIDEO	6 MHz ±3 dB	4 MHz ±1 dB; 8 MHz, -3 dB	4 OR 8 MHz, -4 dB	6 MHz, ±1.5 dB
AUX	15 kHz	15 kHz, ±3 dB	12 kHz, -3 dB	12 kHz ±3 dB EA.
SLOW PLAYBACK SPEED (S)	NONE	2 SPEED OPTION	NONE	NONE
START/STOP TIMES	3 S START/1 S STOP	3 S START/0.5 S STOP	10 S START	4 S START/3 S STOP
PHYSICAL PARAMETERS: SIZE (INCHES)	TRANSPORT-4 X 12 X 24 ELECTRONICS-7 X 13 X 24 REMOTE CONTROL-4 X 6 X 4	24 X 18 X 28	TRANSPORT-17 X 25 X 6 SIG. MOD-17.5 X 19 X 8.75 TBC MOD-17.5 X 19 X 8.75	28 X 19 X 16.5
WEIGHT (LB)	102 TOTAL	180	156 TOTAL	140
POWER	650 W, 1/3φ, 115 V, 47 TO 400 Hz	1000 VA, 110/220 V, 1φ, 50/60 Hz	500 W, 110/220 V, 1φ, 47 TO 63 Hz	150 W, 1φ, 110/220 V, 48 TO 440 Hz
SUITABILITY FOR SHARED FOCAL PLANE SYSTEM	SUITABLE - OPERATIONAL AND DEMONSTRATION SYSTEM	SUITABLE -DEMONSTRATION SYSTEM	MARGINAL - LONG START TIME	NOT SUITABLE-BANDWIDTH LIMITATION

* ALL PARAMETER VALUES GIVEN ARE FOR GROUND UNITS, BH-40 OR BH-70

Information Content (Contrast) (Grey Scale)

The digital scan converter content level is determined by the number of memory planes used. The commonly used numbers are 3, 6 and 8 bits. Three bits allow a maximum of 8 grey levels. Since there is some least significant bit ambiguity, this is unsatisfactory for normal video sources. A 6-bit (64 level) system is adequate for most TV systems, assuming that there is some processing applied to the video prior to digitization. The 8-bit system is a practical upper limit to grey scale. This system would allow more processing to be carried out prior to viewing.

The PEP 500 has a specified grey level capability of 64 levels. It will not reproduce these levels at the video rates used in the focal plane array. Based on performance observed in the EWACS ground station, an estimate of 10 levels is reasonable.

Versatility

The digital scan converter offers good versatility since read and write addressing can be random. This would allow for a scrolling type of display. Since addressing and information is in digital form with no analog integration schemes used, it is easily possible to vary time base values. This allows for zoom and time base expansion. There is no limit to the number of expansion rates.

The analog converter is weak in versatility. While a scrolling display is feasible, it is both a difficult and expensive proposition, thus the display would have to operate in a freeze frame mode only. Multiple scan converters are needed, since read, write and erase functions share the same electronics and cannot be used simultaneously. With two scan converters, it is possible to write with no gaps in data, but the display would have to be blanked for approximately 40 ms for every input frame. Time base expansion is difficult since it is necessary to program four analog parameters for every rate incurred and thus is very cumbersome. Zoom capability in the PEP 500 is standard with approximately a 6X zoom.

Interface

Since both the VTR and displays are analog in nature, it would be necessary to convert the video to digital and then back to analog in order to use the digital scan converter.

The analog scan converter should cable directly for input and output operations, except that the video lines would have to be switched to the appropriate scan converter in use.

Compatibility of Digital Scan Converters

The application of digital scan converter techniques to a ground interpretation facility for the shared focal plane system can be partially implemented with commercially available image processing systems. The functions of frame store refresh memory, high resolution display, a variety of image processing enhancement operations (including zoom and scrolling), together with computer control and management of the storage, processing and display operations, are all available in commercial equipment. The system manufacturers provide, through a number of system models and options, a wide range of performance and flexibility, including resolution, grey scale and processing operations.

Prominent manufacturers of image processing systems include, but are not limited to:

- Grinnell Systems
- Genisco
- DeAnza Systems
- Comtal
- Colorado Video

The one essential function that commercial image processing systems do not provide is the initial acquisition of imagery in real (or near real) time from a sensor or tape*. They are basically configured to acquire image data from

* Some systems have an option to acquire "live" TV frames. Such an option would require substantial development modification to handle the shared focal image format structure and associated data rates.

computer storage, i.e., at very low data rates compared to the SFP sensor rates. Thus, it is necessary that hard-wired, high speed logic circuitry be provided to "grab" the imagery from the tape for storage in a frame store memory**. In the present case, such circuitry would also have to have controllable pixel and line averaging functions to provide for low resolution, full format display as well as zoomed, high resolution display.

Thus, the implementation of a digital scan conversion process, even with commercially available image processing and display components, requires a significant amount of additional development to provide SFP system compatibility.

Table III-3 summarizes the above arguments. Clearly for this demonstration, an analog scan converter is the more desirable despite its freeze frame mode. Only two analog scan converters can be considered as candidates: a Hughes 639H and a PEP 500. These two are compared in table III-4 and there is no question that the PEP 500 is by far the better choice. Furthermore, the PEP 500's are available both as CFE and GFE.

TV MONITOR

Candidate monitors were evaluated in order to select an appropriate display for use with the SFP system. These are compared in table III-5. It can be seen from the data that there are few major differences between monitors. The KD 1501 has higher resolution but it is specified at a lower light level which will somewhat minimize the resolution difference. The zoom capability of the scan converter further minimizes the importance of this resolution limit. The HD 1501 also has autotracking of any line rate using phase lock loop technology. This feature is unnecessary as only one line rate will be used. The BH-15 offers the best cost/performance figure. In terms of availability, the Sierra is available and the Bail is expected to be available as CFE.

** The frame store memories associated with commercial image processing systems may have too long access times to function at SFP image data rates.

TABLE III-3

SCAN CONVERTER COMPARISON

CAI Digital Scan Converter	PEP 400 or 500
Advantages	
Multiple operating modes	Low cost - $5000/unit or GFE
Freeze frame	High resolution 1000 x 1000 pixels
Rolling display (viewfinder)	Off-the-shelf hardware
Slow scan output	Zoom capability
2:1 zoom	
Digital interface to digital system	
Variable read/write rate	
Uses standard TV monitor	
Disadvantages	
High cost	Lack of rolling display capability
Low resolution	GFE units are old, are in poor condition and are modified
Development time required	Flashing display
	Poor grey rendition at high data rates
	Constant rate without major modification

TABLE III-4

SCAN CONVERTER COMPARISON

	Hughes 639H	Princeton PEP 500
Deflection sensitivity	±.5 V/diameter	±2.5 V/diameter
Deflection input z	5 kΩ	1 kΩ
Deflection bandwidth	700 kHz	3 MHz
Video bandwidth	12 MHz	28 MHz
Writing speed	30 μs/line	20 μs/line
Resolution	1200 lines/diameter	1350 lines/diameter
Image retention (continuous readout)	1 hr for 50% loss	2 hr for 50% loss
Linear gray scale	32 levels	64 levels
Zoom	6 X	36 X
Erase time	150 ms	33 ms

TABLE III-5

TV MONITOR COMPARISON

Specification	Ball BH-15	Conrac QQA-14	Sierra Scientific HD 1501
Horizontal center resolution (TVL)	1000	1000	1500
Corner resolution (TVL)	950	800	1300
Gray shades	10	10	10
Video bandwidth (-1 dB)	32 MHz	30 MHz	30 MHz
Distortion (geometric)	2%	1.5%	1%
Brightness (at full resolution)	60 fL	50 fL	30 fL
Line rate	525-1229 switched	525-1229 switched	525-1229 auto
Cost	$900	$2200	$2800

HARD COPY RECORDER

Four types of film image recorders were evaluated as potentially suitable for generating the hard copy imagery for the SFP camera. They represent the present state of the art in operational image recording capability in their respective categories. The four machines are:

- A laser beam recorder (LBR) using a helium-neon laser as a light source.
- A laser diode recorder (LDR) using a solid-state diode source.
- A cathode-ray tube (CRT) image recorder.
- A conventional facsimile recorder (LFX).

The comparison of these recorders was based upon the performance specifications and availability with particular weight given to the following factors: resolution; contrast; line rate; signal bandwidth; format; access time; and availability/cost. A summary of recording system capabilities is given in table III-6.

The LBR is clearly the most attractive solution from a performance viewpoint since it is capable of recording at nearly full sensor resolution with adequate grey scale, line rates and film speed. Containing a rapid film processor, the LBR provides hard copy imagery in near-real time with access time of less than 2 min. However, the high cost and projected unavailability of existing LBR's for the SFP demonstration program eliminate them from consideration.

The LFX and other facsimile machines are unacceptable for this program because of the low data bandwidth. Even with a slow scan readout of the scan converter, recording rates are too low to be usable.

The LDR and CRT systems offer a more interesting comparison. The LDR can record at approximately one-fourth of the sensor resolution with adequate line rates. The line sync capability is limited by an input buffer to about 5 percent of a line. The recorder can provide 13 $\sqrt{2}$ shades of grey. The film transport is a CAI KS-87 standard film back. Since the recorder contains no film processor, an auxiliary processor is required and access time is limited to standard processing times.

TABLE III-6

HARD COPY RECORDER CHARACTERISTICS

Type	LBR	LDR	CRT	LFX
Manufacturer	RCA	PE	Honeywell	Litton
Image size (inches)	4.6	4.5	5	8
Resolution (elements)	7333	2800	1000 (minimum)	1600
(lp/mm)	32	12	4	4
Grey scale, 2 steps	13	13	18 wet 10 dry	4, 8, 16
Dynamic range	95	95	512 wet 32 dry	
D_{max}	2.0 - 2.5	2.0	2.6 wet 1.6 dry	
Film speed (in/s)	0.1 - 3.35	0.4 - 4.0	0.04 - 10.0	
Hard copy access	2 min	standard process	standard processing wet 2 min dry film	
Line rate	108I/s	1600/s	18,000/s	20/s
Sync capability, line fraction		5%	0 - 100%	
Bandwidth	8 MHz	4 MHz	8 MHz	32 kbits/s
Volume	40 ft^3	11 ft^3	3 ft^3	
Availability/cost	$500,000	?	<$15,000	

The CRT recorder can record 1000 spots/line at normal intensity and up to 2.5 times this at reduced intensity thus approaching the LDR resolution. The line rates and film speeds are fully adequate, and the signal bandwidth is comparable to that of the sensor. Since the line scan is electrical rather than mechanical, line sync is externally controlled and can reach 100 percent of a line. The recorder can use wet process film, dry process film and dry process paper. Rapid dry processors for film and paper attach directly to the recorder, but a rapid processor for wet process film is not available, requiring an external processor as with the LDR. The CRT system cost, including processors, is under $15,000.

It is believed that the most appropriate choice for the SFP demonstration is the CRT recorder. Since no available system can record at the full sensor resolution, some magnification is required. While somewhat greater magnification is required for the CRT than for the LDR, the greater operational flexibility, rapid access to imagery and a small size appropriate for airborne demonstration make it the recorder of choice.

SECTION IV
INTERFACING

Having defined each of the system components, it is now necessary to describe in some detail the interfacing requirements and design concepts which have led to the selection of those components and will meld them into a system.

In the airborne portion of the system, the interfacing between cameras, lenses and focal plane arrays has been covered by the design detailed in the previous section. Between the array and recording of imagery on tape, electronics to drive the individual CCD's and form a serial of video signal from them are needed. This subject is discussed under the heading focal plane array electronics. Included in this topic are assessments of the need for pixel calibration and cooling of the arrays. In order to assure high quality E-O imagery, some form of stabilization, particularly roll stabilization, is desirable and is discussed. As the interface between airborne and ground subsystems, the VTR must record not only the video signal, but auxiliary information to control the display of that signal. The appropriate encoding and decoding of this information is briefly outlined, followed by a full description of the proposed image handling operations in the ground portion of the system.

FOCAL PLANE ARRAY ELECTRONICS

In the E-O focal plane array, there are primarily three functions: image sensing, video preamplification processing and memory for proper sequencing.

Image sensing is accomplished with six linear CCD arrays that are optically butted. The image is integrated and then read out of the six imagers simultaneously.

The output of each CCD is amplified to a usable level in a video preamplifier. The output of each video preamp drives its own flash 8-bit A/D converter. Thus each pixel is converted into an 8-bit word. These 8-bit words, six channels wide, are stored in memory and then read out in the correct sequence. The block diagram for this system is shown in figure 4.1.

In the video processing, there are four problems with which to contend. Three are inherent to the CCD sensor:

- Charge generated in bulk
- Photo response nonuniformity (PRNU)
- Dark signal nonuniformity (DSNU)

The fourth is simply a matter of stretching system resolution beyond 8 bits.

There are five types of processing that can be performed to deal with these problems:

- Bulk charge subraction to deal with charge generated in the bulk.
- PRNU correction by digital multiplication to compensate for PRNU.
- DSNU subtraction to deal with the problem of DSNU.
- Background subtraction to eliminate dc from the video Automatic Gain Control (AGC) to increase peak-to-peak amplitude.

Bulk Charge Subtraction

Charge generated in the bulk is a serious problem. It can cause a false background level that is 40 percent of the full scale video output. The circuitry required to deal with this problem, however, is relatively simple and quite necessary. Figure 4.2 is the block diagram for bulk charge subtraction.

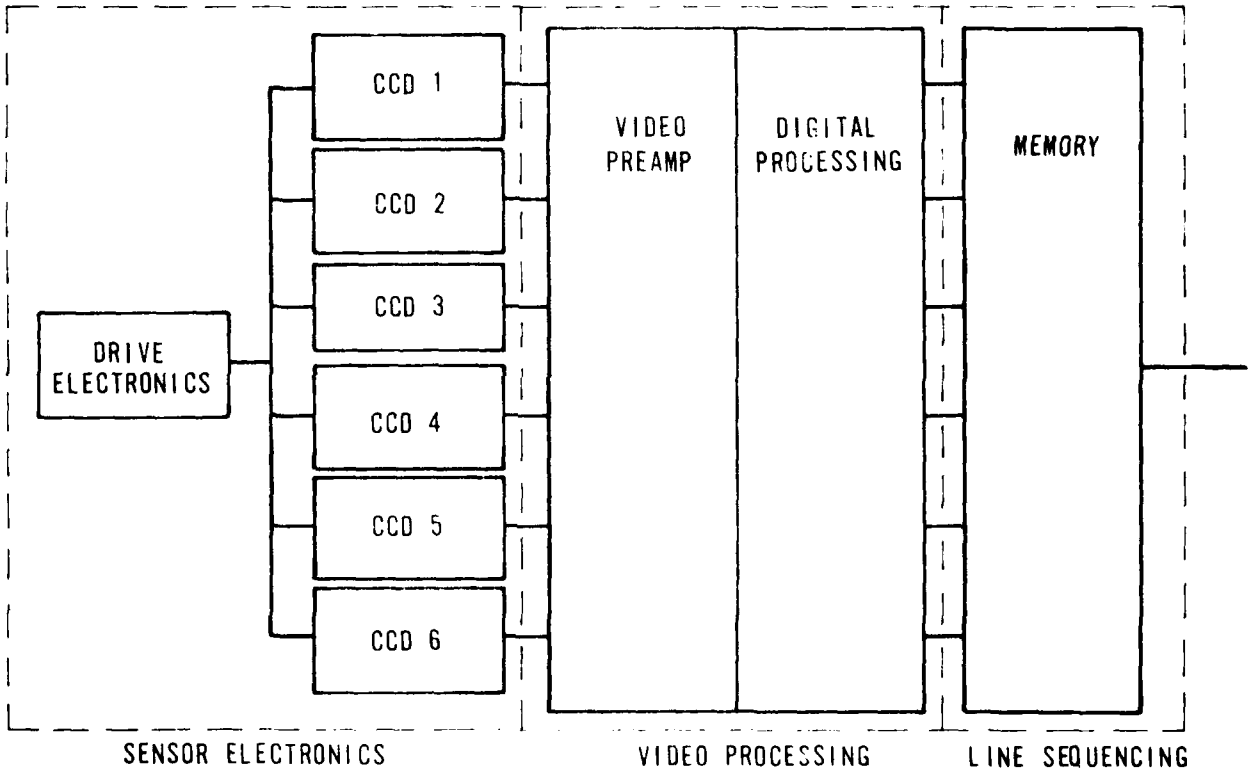

FIGURE 4.1
FOCAL PLANE ARRAY ELECTRONICS

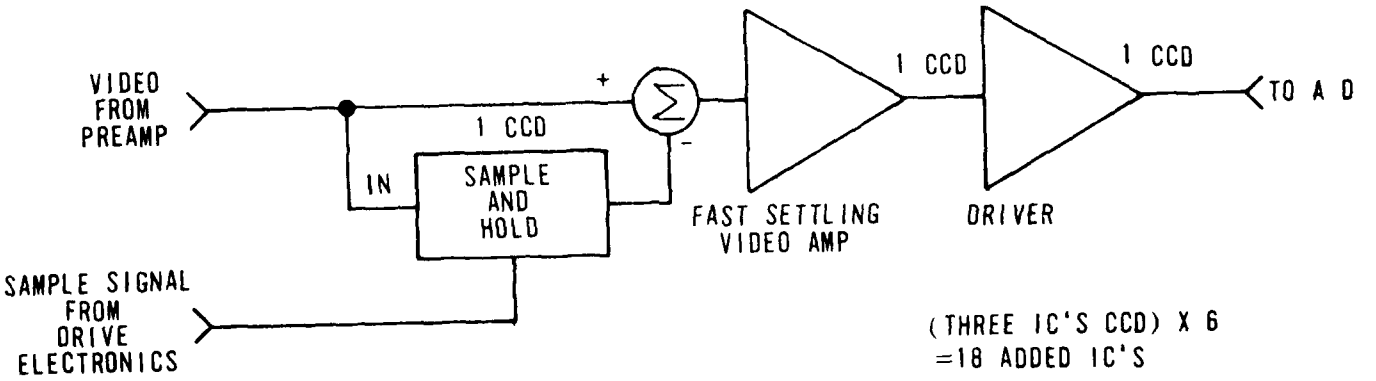

FIGURE 4.2
BULK CHARGE SUBTRACTION

As indicated in figure 4.2, bulk charge subtraction requires an added sample and hold, an added fast settling video amp such as the Teledyne Philbrick 1435, and an added line driver such as the LH0033 to provide the low impedance source required by the TRW Flash A/D.

This circuitry should have a small impact on the packaging problem since a good deal of empty space has been planned around the flash A/D's due to their high power consumption.

Photo Response Nonuniformity

PRNU would be performed as a digital multiplication after the 8-bit conversion. The block diagram for PRNU correction is illustrated in figure 4.3.

The ROM would be programmed to its characterized CCD. In terms of hardware, an 8-bit multiplier and two 1K x 8 ROM's per CCD would be needed. The 12-bit counter (3 IC's) would address all six ROM's for all six CCD's.

Dark Signal Nonuniformity

From observations in the lab, DSNU is a small problem. Typically it would cause an error of two least significant bits in the video level. Nonetheless, DSNU subtraction could be performed as illustrated in figure 4.4.

DSNU is directly proportional to integration time. It is also inversely proportional to V/R. Therefore, DSNU would have to vary as the inverse of V/R. The 1/x function can be implemented with one IC. ROM of 2K x 4 would be characterized for each CCD.

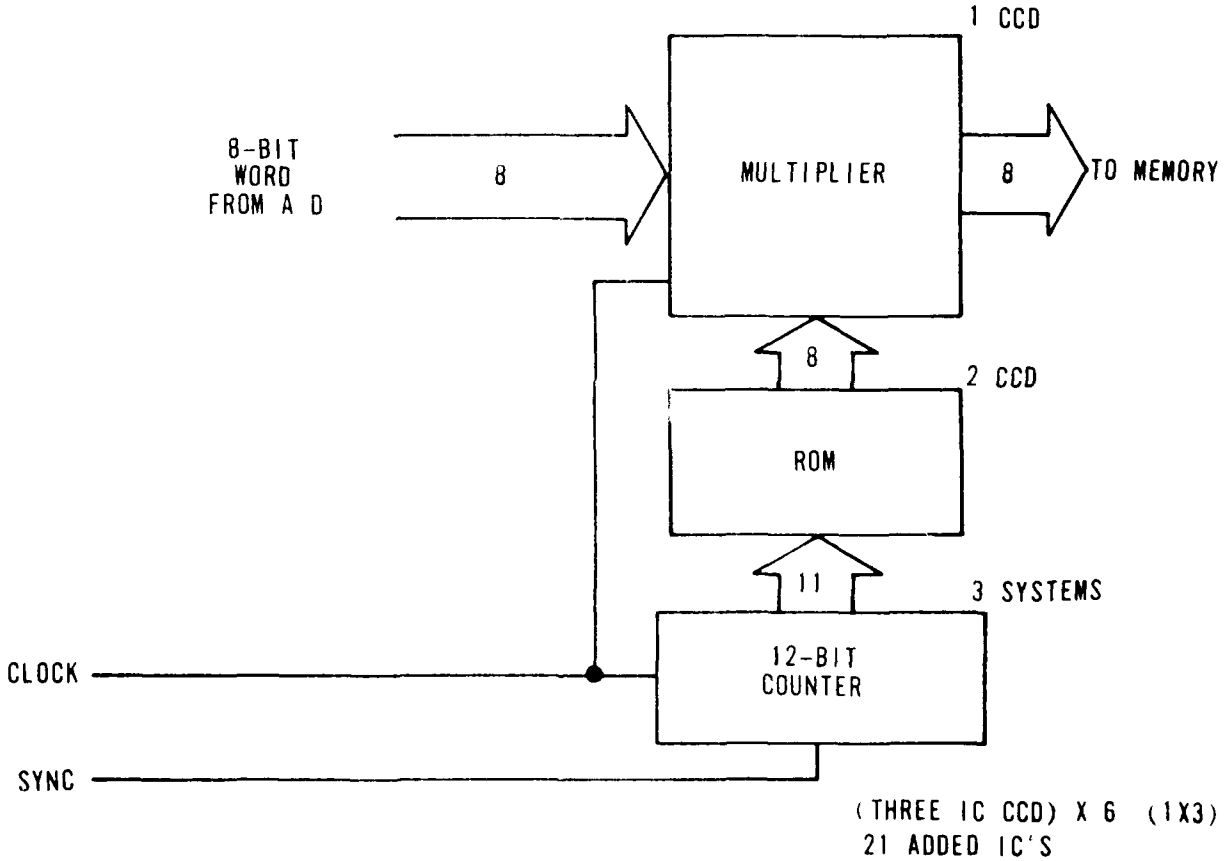

FIGURE 4.3
PHOTO RESPONSE NONUNIFORMITY CORRECTION

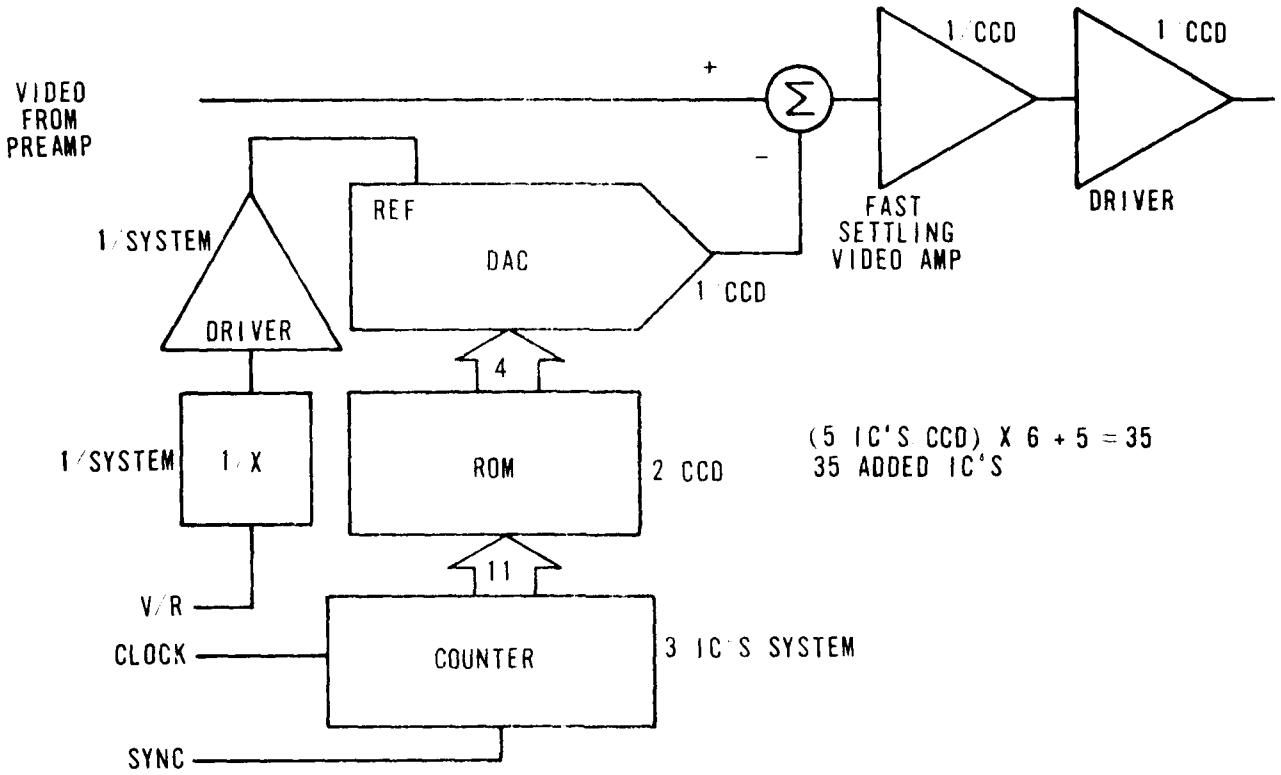

FIGURE 4.4
DARK SIGNAL NONUNIFORMITY SUBTRACTION

Background Subtraction

To accomplish background subtraction, the dc level of the video would be shifted such that an equal number of pixels would be above and below a given level. The basic block diagram is illustrated in figure 4.5.

A magnitude comparator determines whether the pixel is above or below the desired median. Its output controls an up/down counter. At the end of a line, the counter state is latched for each of the six CCD channels. The latched outputs are then summed for all six channels. This sum is compared with a fixed count and the lesser value is steered to the second accumulator. This is to provide loop stability via slew rate limiting. For further stability, logic is provided to detect the imminent overflow of the second accumulator. This final accumulated value is then inputted to a D/A converter. The output of the D/A converter goes back to the summing point of the video amplifier. The modification to the video amplifier would be the same for background subtraction, DSNU subtraction or bulk charge subtraction. Median shifting would be capable of shifting the average level up or down.

Automatic Gain Control

The thought behind AGC is that some minimum number of full scale conversions, including zeros (possible by background subtraction) are desired. Figure 4.6 is the block diagram for AGC.

Either full scale, all ones or all zeros, will advance the counter. At the end of a line, the counter states are latched and then the six channels are summed. This sum is compared with a fixed count for slew rate limiting for loop stability. The lesser of the two is steered to a difference computer which computes the difference between the selected number of full scales and the number for this line. The difference then is summed into the second accumulator. Again for loop stability, there is an imminent overflow detector. The output of the second accumulator runs the D/A converter. The output

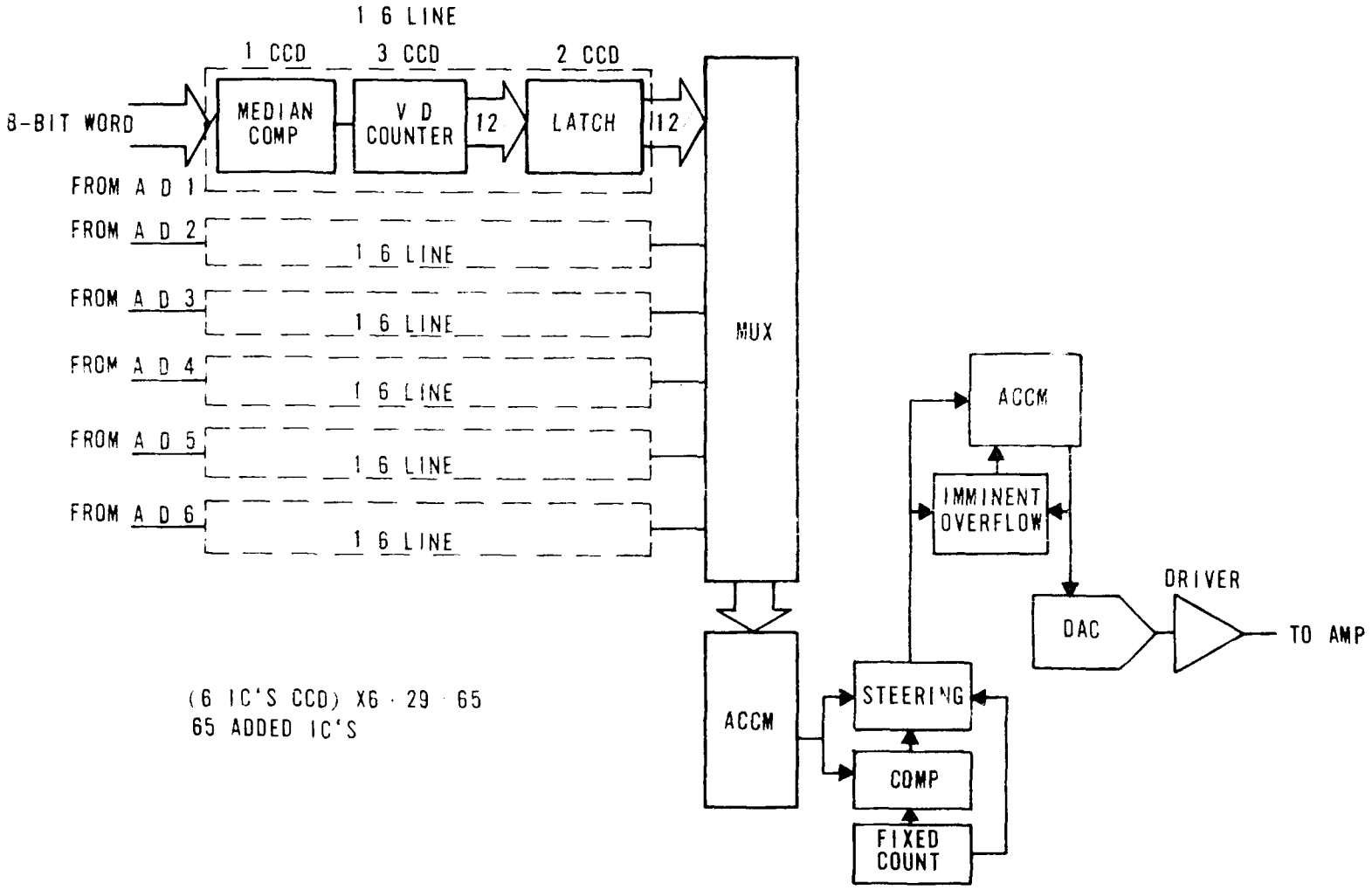

FIGURE 4.5
BACKGROUND SUBTRACTION

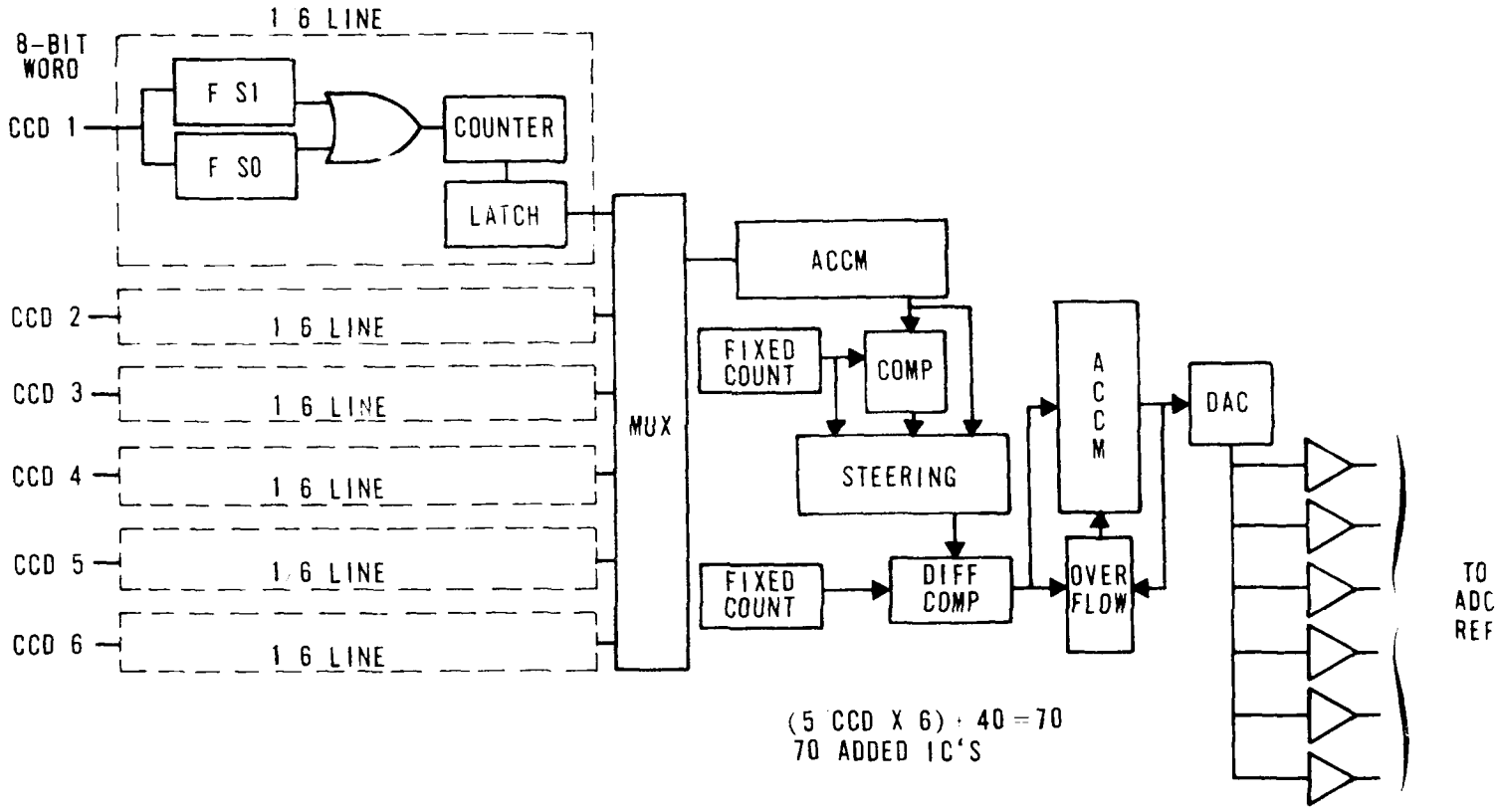

FIGURE 4.6
AUTOMATIC GAIN CONTROL

of the D/A converter is then buffered. These buffered outputs drive the reference of the flash A/D converters at the front of the system.

Conclusions

The following conclusions can be made based on the previous discussion:

- Bulk charge subtraction will have only a small effect on the packaging problem.
- PRNU correction would have an impact of a probable two board increase in the system.
- DSNU subtraction could cause a two board increase in the system.
- Background subtraction would cause a four board increase in the system.
- AGC would cause a four board increase in the system.
- Because of design similarities among the function described above, all of the functions could probably be implemented and cause only an eight board increase in the system.

For conditions in which the arrays are operating at low levels of illumination, it can become desirable to correct the output signal for pixel-to-pixel nonuniformities. This pixel calibration requires reading the appropriate multiplication factor from a ROM which, for uniform illumination, would produce an unmodulated video signal except for noise. Although the system should be operating near saturation levels in clear weather, it is highly desirable to demonstrate optimum performance under less than ideal conditions. Therefore, it is recommended that pixel calibration be included as part of the focal plan electronics.

In general, it is also desirable to cool the array and especially to maintain a constant temperature. Cooling reduces CCD dark current and thus improves the signal-to-noise ratio on the chip. Of greater importance is temperature stability, since fluctuations in temperature usually produce unusable imagery during transient periods. Again, for demonstration, special environmental control is not needed because the tests will be in an open aircraft and because at the time of year for which the tests are tentatively scheduled; cool weather is to be expected, which allows for cooling by air circulation.

SHARED FOCAL PLANE POWER BUDGET

The CCD and image processing electronics are divided into two electronic packages, i.e., magazine electronics and electronic unit. Since all radiometric correction is done in the magazine electronics, there is a significant change in power input, depending on the options selected. Input power to the magazine, assuming the four radiometric corrections previously described, is 300 W. This number would drop to approximately 150 W for no radiometric correction. The electronic unit will require approximately 140 W. These figures assume a power supply efficiency of 60 percent. These estimates are for the focal plane array and processing electronics, and do not include the camera requirements.

STABILIZATION

Two methods of roll stabilization exist to cancel small roll angle perturbations. Both methods assume the use of a roll angle sensing device.

Composite Sync Interval

It would be possible to allocate some portion of the composite sync interval for stabilization purposes. It would then be possible to shift the sync pulse relative to the start of video transmission. This could be implemented in either the focal plane array or in the VTR, although if it were to

be done on the VTR, it would be necessary to add electronic circuitry already existing in the focal plane array. This allocation would shorten the time alloted for active video transmission and raise the required video bandwidth.

If a 41- μs stabilization window were added to the sync interval, its width would increase by 4 μs since both the front and back porch times would have to be extended. This would increase the video bandwidth requirement by 12 percent

A limitation of this approach would be the resolution achievable with such a small window available. The resolution is set by the number of decoded intervals available and is proportional to the master clock frequency of the system. This stabilization would be done on a line-by-line basis.

Scan Converter

A second approach would accomplish the stabilization in the scan converter. Using an analog scan converter, it would be possible to modulate the "write" sweeps with the stabilization signal. This could be carried out using either a continuous or line-by-line basis. The continuous approach would give the most correct geometry, but the implementation would give some intensity modulation as the sweep speed is changed. Line-by-line correction would not exhibit the problem, but geometric errors within a line would not be corrected. A minor effect of stabilization in the scan oonverter will be some modulation of the right edge of the display. This modulation is proportional to the peak amplitude of the stabilization signal.

There is no bandwidth penalty for stabilizing the image in the scan converter.

The stabilization signals can be provided by a miniature gyro mounted on the focal plane array electronic assembly. This gyro will output the correct signal for cancelation of small perturbations from the focal plane array

mounting platform. Correction of up to 10 percent of the field of view will be detected. Thus using a 12-bit word, the stabilization accuracy will be ± 1/4 pixel. Figure 4.7 shows a block diagram for gyro stabilization.

The gyro, signal microsyn and spin motor signals are generated by dividing down a 153.6-kHz reference frequency to 9600 Hz and 1200 Hz, respectively. These signals are then converted to a sinewave and amplitude regulated. The error signal is synchronously demodulated to a varying dc signal. This error signal is then applied back to the gyro torquer at a very low amplitude to cancel the normal procession rate of the gyro. The error signal is also buffered and output to the data encoder.

The two methods would cost approximately the same.

A second approach would be to use vertical reference data from another system on the aircraft. If another source is available, there would be a considerable cost savings by eliminating the gyro and its associated electronics. Depending on the vertical reference used, improved drift characteristics over the miniature gyro can be expected with this approach.

VIDEO RECORDING FORMAT

Bandwidth Reduction Techniques For Focal Plane Array Video

Because a dual-channel, 6-MHz tape recorder has been recommended and the video width is 8.3 MHz, it is necessary to divide the signal into two 4.15-MHz signals to avoid excessive reduction of resolution. The two possible methods are alternate pixel and alternate line recording.

Alternate Pixel Recording

The recording of alternate pixels, i.e., odd on channel 1, even on channel 2, would be easiest to implement with hardware. The odd/even pixels

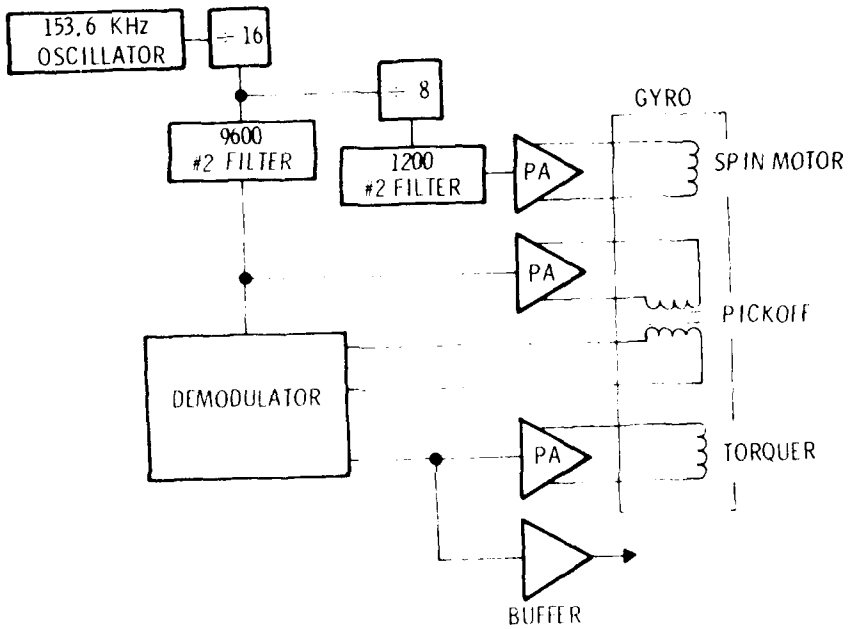

FIGURE 4.7 GYRO STABILIZATION

are already separated in the focal plane array. The problem arises when it is necessary to recombine these pixels into serial form. It would be necessary to regenerate the pixel clock to a fraction of a cycle in order to sample the two VTR channels when the video signal is valid. This is no small problem, but when comparing this approach against the alternate line recording, the signal degradation will be no worse and the system complexity is greatly reduced. Figure 4.8 is a block diagram of this concept.

Alternate Line Recording

Recording alternate lines simultaneously eases the problem of pixel registration, but it does so with a very high hardware cost. The focal plane array electronics would have to be expanded to include two additional memory planes to allow for the slower readout rate. As the memory is expanded, the amount of support circuitry will also increase.

The recombination of the video from the two channels again has the most impact. Two possible approaches to recombination are considered:

- The video could be digitized and placed into its correct form using a method similar to that used in the focal plane array. The amount of memory and memory support circuitry would be similar to the focal plane array. The summation circuitry would not be needed which would also reduce the amount of control logic required. Although hardware impact would be great, the signal degradation would be small.
- The video could be passed through an analog shift register to perform the recombination. The main deterrent in this approach is availability of the proper device. The available shift registers are small, with a poor signal-to-noise ratio. It is possible that with a more advanced product, this approach could be feasible. The need for an output shift rate that is double the input shift rate places some doubt as to the practicality of this approach.

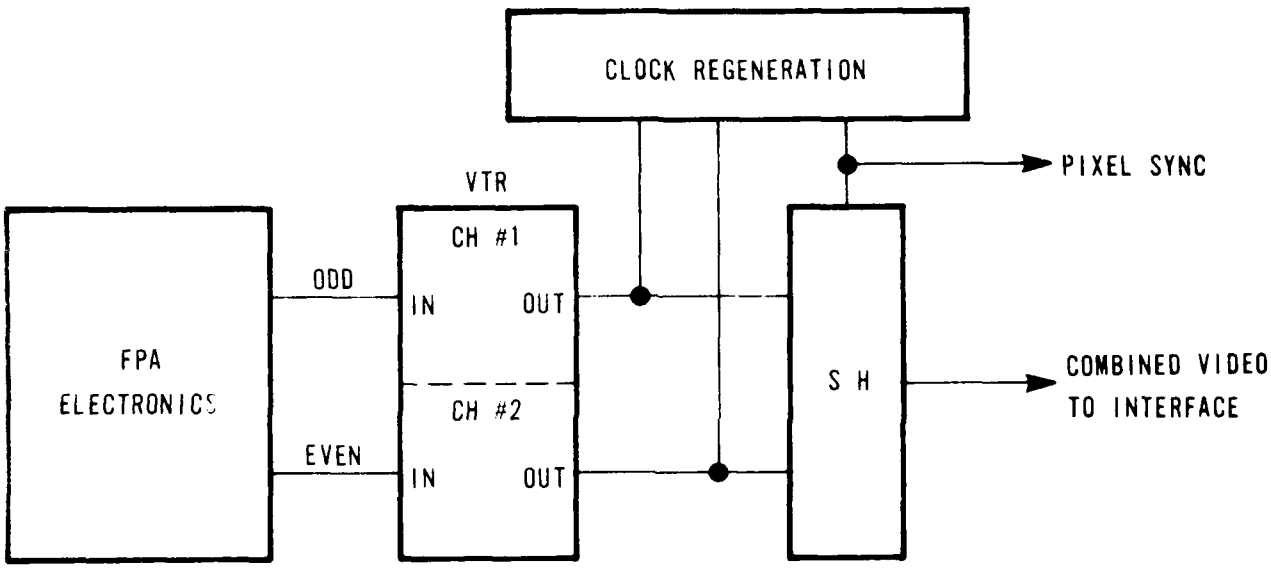

FIGURE 4.8 ODD/EVEN RECORDER INTERFACE

There is, however, a CCD memory device currently in prototype production by Fairchild. This device is a serial to parallel to serial delay line. It has not yet been ascertained when this device might go into production, but it will allow effective manipulation of the signal to maintain bandwidth on a two-channel VTR.

DATA ENCODER

The purpose of the data encoder is to process and route to the VTR auxiliary information needed for proper display of the video at the ground station as shown in figure 4.9.

The line counter places numbering data on the tape for use of the zoom mode. The counter is updated on every 100th line. The counter output is serialized and FSK modulated for placement on an auxiliary channel of the VTR.

Alternatively, a universal time code could be recorded every 100th line for essentially the same effect but allowing more simple correlation between film and E-O imagery.

The analog information from the gyro must first be converted to a digital word. The output from the converter is then handled in an identical manner to the line counter data, except that the information will be placed on the second auxiliary channel of the VTR.

DATA DECODER

The data decoder's purpose is the reverse of the data encoder used in the aircraft. The data is read off the auxiliary channels of the VTR and demodulated into a serial data stream. The UART is again used, but this time it converts the serial data into parallel data. The line number information

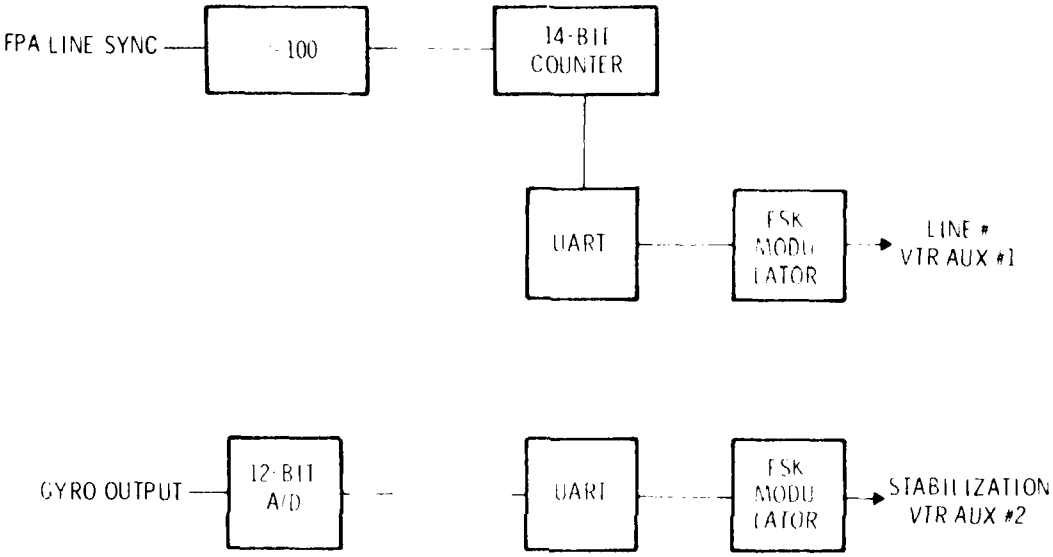

FIGURE 4 9 DATA ENCODER

is placed onto the data bus. The stabilization data is converted to an analog signal used to modulate the write sweep positions in the scan converters. This process is shown in figure 4.10.

SCAN CONVERTER INPUT INTERFACE

The input interface electronics, shown in figure 4.11, provide most of the signal processing in the ground system. Sync is separated from the composite video and is used to key the delay for replay zoom and the sweep generators. Delay times and bias setups for the scan converter originate from the microcomputer and are distributed to the interface through a peripheral interface adapter (PIA). All sweep generation and signal scaling for the scan converter are accomplished in this section.

SCAN CONVERTER/DISPLAY INTERFACE

The display interface has the primary purpose of routing video and sync information to the desired display. Because of the need for various read rates from the scan converter, a programmable read bias circuit is included in this section. The selected sync pluses are used to key the sweep generator for the hard copy display. This process is shown in figure 4.12.

SHARED FOCAL PLANE MOVING MAP DISPLAY

Although a scrolling display using analog scan converters was dismissed in the previous section as difficult and costly, the following is a discussion of how it might be accomplished and the problems it would entail.

Since the Princeton Lithocon is a single-ended tube, all operations, i.e., erase, write and read, must be carried out in a serial fashion. Read video is blanked during either a write or erase function. If the scan converter is required to write a new line or erase a line, then significant dead zones will

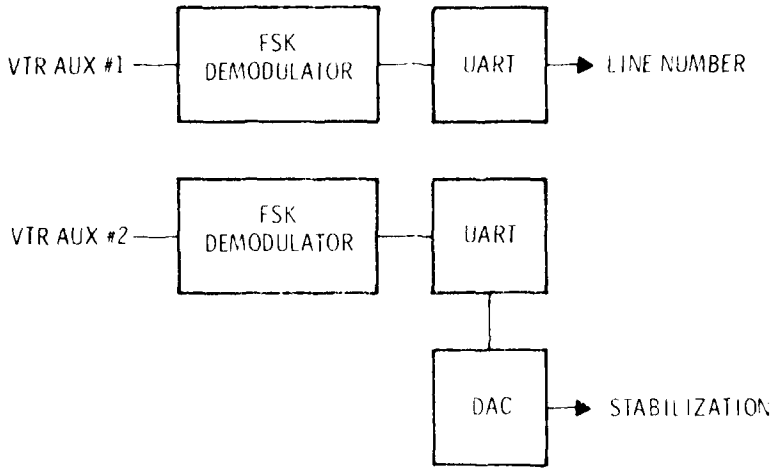

FIGURE 4.10 DATA DECODER

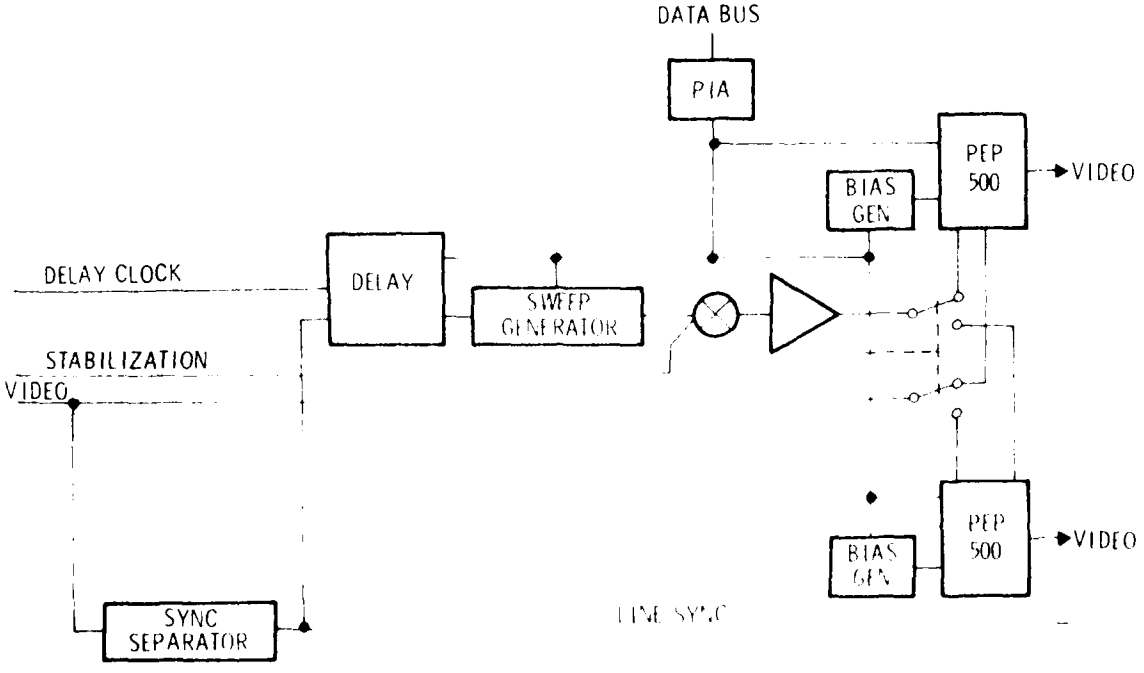

FIGURE 4.11 SCAN CONVERTER INPUT INTERFACE

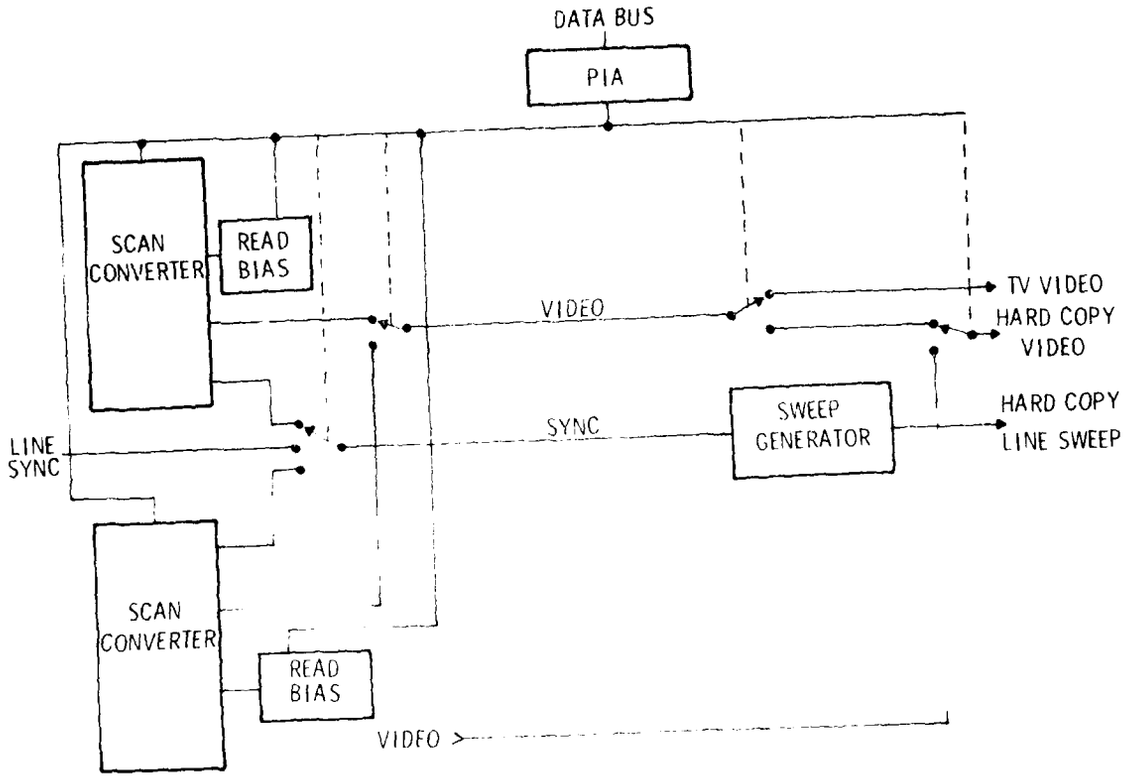

FIGURE 4.12 SCAN CONVERTER/DISPLAY INTERFACE

be apparent in the display. The time to write a single line from the focal plane array is approximately .570 ms. Assuming a standard 525-line low resolution readout, this will give a ten-line gap in the field being read. Erasure of the area to be written would give an additional three-line gap. Because of these problems, the only viable solution would be to ensure that the scan converter in the read mode is not disturbed by write or erase operations. This solution requires that three scan converters be used.

In a three scan converter moving map dispaly, the converters would be operated in a low resolution mode (500 lines). Each input line would ideally be written in two locations on the Lithocon. For a practical system, alternate lines would be written in the two locations. The area to be read would be skewed as a fuention of the input line rate. The video being read will be delayed by three frame times from the input signal. The read deflection signals will be skewed continuously to give the moving map appearance. Figure 4.13 together with timining diagram, figure 4.14, shows the operations in their relative time periods.

Although this approach gives a more pleasing display, there are several disadvantages that should be weighed:

- A third scan converter is required. This increases the cost and package size requirements.
- The scan converters are read at a lower resolution. Redundant information is being stored giving a 2X reduction in the information stored.
- The interface electronics become far more complex resulting in increased cost and package size. Interface electronics are required for the third scan converter. The normal read circuits in the scan converters cannot be used. This requires all new read deflection circuitry in addition to the standard circuitry used for the replay zoom operation.
- The whole approach would require an added system cost of about $25,000

AD-A093 403 CAI BARRINGTON ILL F/G 14/5
SHARED FOCAL PLANE INVESTIGATION FOR SERIAL FRAME CAMERAS.(U)
MAR 80 D N DEFOE N62269-79-C-0801
UNCLASSIFIED CAI-7506-0020 NADC-80053-30 NL

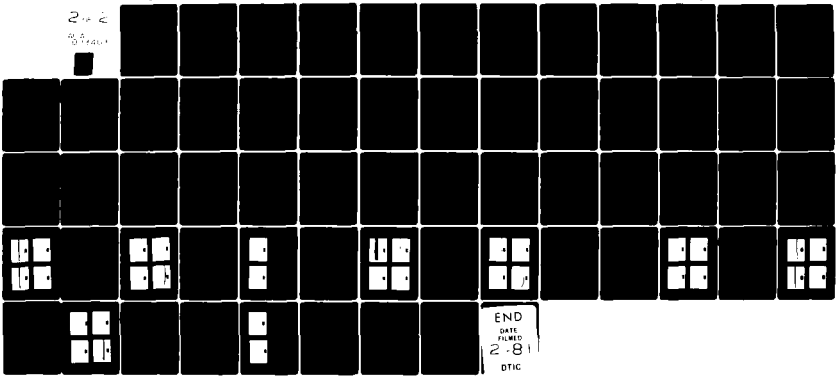

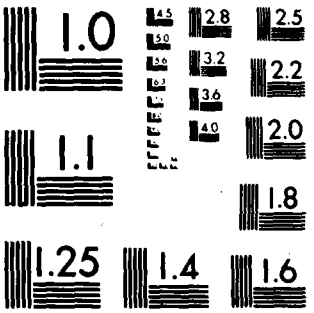

MICROCOPY RESOLUTION TEST CHART
NATIONAL BUREAU OF STANDARDS 1963 A

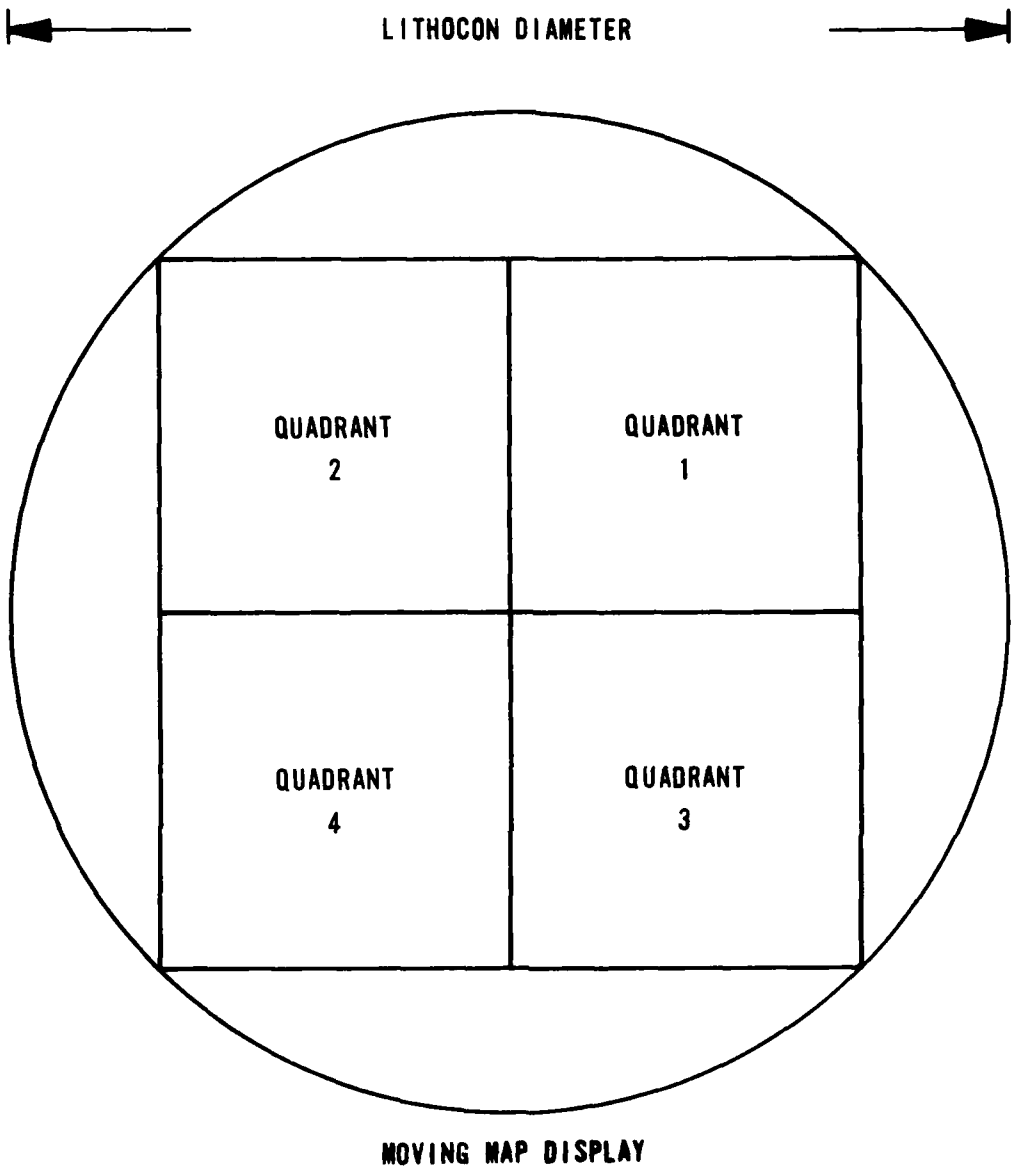

FIGURE 4.13 SCAN CONVERTER ACTIVE AREA ALLOCATION

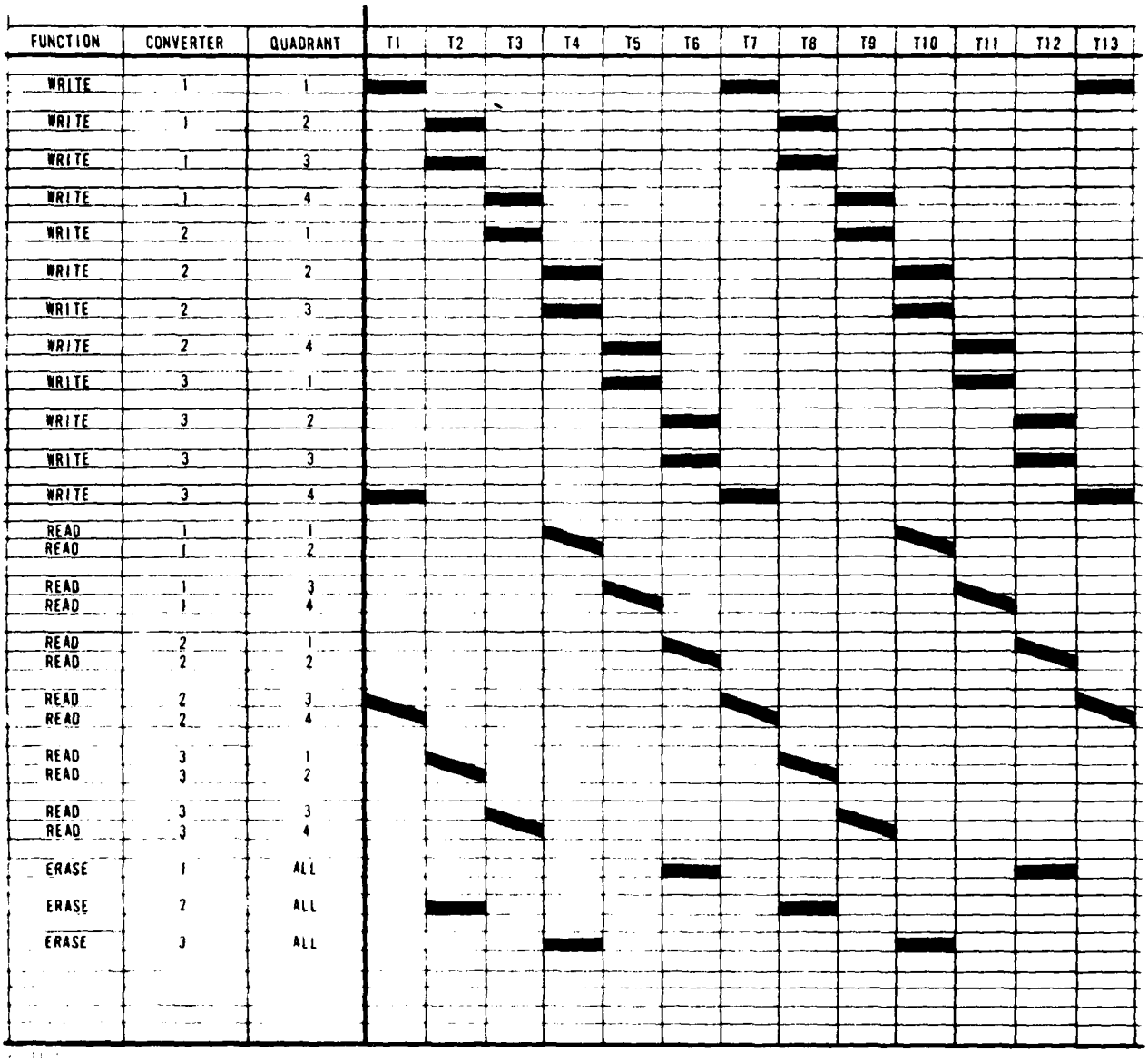

FIGURE 4.14 SCAN CONVERTER TIMING

CUEING

Several methods exist to cue targets of interest for a zoom operation. With any method used, it is necessary to generate a line number for tape recorder recall and a horizontal start delay for the scan converter sweep generator. To generate this information, the following approaches are viable.

Joystick

A joystick can be used to place an electronically-generated box around a target of interest. This approach will also allow the target to appear in the center of the zoomed area (at the operator's dicretion). Since a 3X zoom does not require very accurate cueing. this approach would also have a fast human response. The interface is similar to the light pen; and joystick cost would be about equal to the light pen described below.

Fixed Grid

A fixed grid pattern could be used to indicated coordinates of a target. These coordinates would then be input by means of thumbwheel switches. The operator would have to interpolate between the grid lines to place the target in the center of the zoomed area. The response time to accomplish this is quite slow. There is no real saving to this approach over the joystick.

Light Pen

The light pen can be used to cue a target with a minimum of human response time. The target will appear in the center of the zoomed area including targets at the edge of the screen. The interface of this unit is quite simple. The cost of the light pen itself is approximately $400. As the leading choice of methods, the following is a detailed description of the light pen operation.

LIGHT PEN

In order to cue an area for a replay zoom operation, it is necessary to define that area to the control system. This system requirement is met using a light pen. The light pen defines the cued area by outputting a signal as the CRT beam is scanned across the light sensor in the pen. This signal must first be converted to a standard logic level by a pulse shaper. This logic level pulse can now be used to load a pair of storage registers from vertical and horizontal address counters. The vertical counter is incremented for each line of a TV field. This counter is reset on a field sync pulse from the TV. The storage register will thus be loaded with the vertical address of the cued area when the light pen is activated. The horizontal addressing works in a very similar manner, except that the counter is incremented by a clock at 256 times the horizontal scanning frequency and is reset by the line sync signal.

The result of this operation is the availability of two data words to be used by the microprocessor (μP) for computing the line number at which to start the zoom and horizontal address at which the scan converter should start its write operation. A block diagram of the light pen is given as figure 4.15.

HIGH V/R - VARIABLE LINES/FRAME IMPACT

When the maximum V/R rate is exceeded, the image as presented on the TV monitor will be compressed in the line-of-flight direction. This effect can be corrected by expansion of the sweep amplitude, but would require computation of the amount of expansion needed as well as the number of lines that would then comprise a frame. The lines/frame information is necessary for scan converter switching and location of the zoom coordinates.

An alternative approach is to keep the lines per frame, and thus the frame rate, constant while varying the display image height. In this way, the operator can choose a comfortable frame rate and maintain a constant image scale on

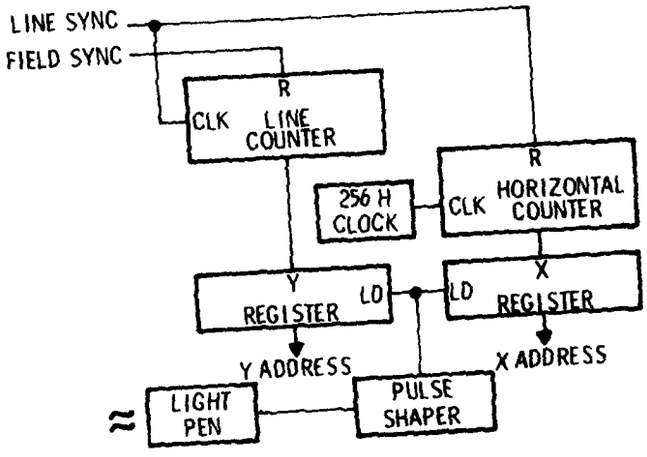

FIGURE 4.15 LIGHT PEN ASSEMBLY

display independent of range.

Because it is envisioned that a constant integration time will be used for ranges from a few hundred feet out to at least 10,000 ft, this feature is necessary for the demonstration system. Given a constant 30° depression angle, the range is easily calculated as twice the altitude. This relatively low accuracy method coupled with the aircraft airspeed provides a rough correction at little cost. This data will be recorded on the VTR and used in the display control logic to control the number of lines per frame displayed. In addition, a manual adjustment will be provided on the scan converter which controls the sweep amplitude for a pleasing display.

Image Enhancement

E-O imagery displayed on video monitors make possible a wide variety of image enhancement techniques. Some of these techniques are edge enhancement, contrast stretching, contrast slicing, psuedo color and others. They do, however, require substantial electronic processing. Because such capabilities are well beyond the scope and intent of the SFP system, it is recommended that effort not be spent demonstrating well developed techniques of this nature.

Operator's Panel

The proposed operator's panel is illustrated in figure 4.16. It is intended to be simple providing only the functions and indicator lamps necessary for efficient interpretation. Table IV-1 is a list of the features and their uses.

AIRBORNE SYSTEM ELECTRONICS

The airborne system electronics, shown in figure 4.17, provide the needed signal processing of the CCD video signals so that it may be recorded

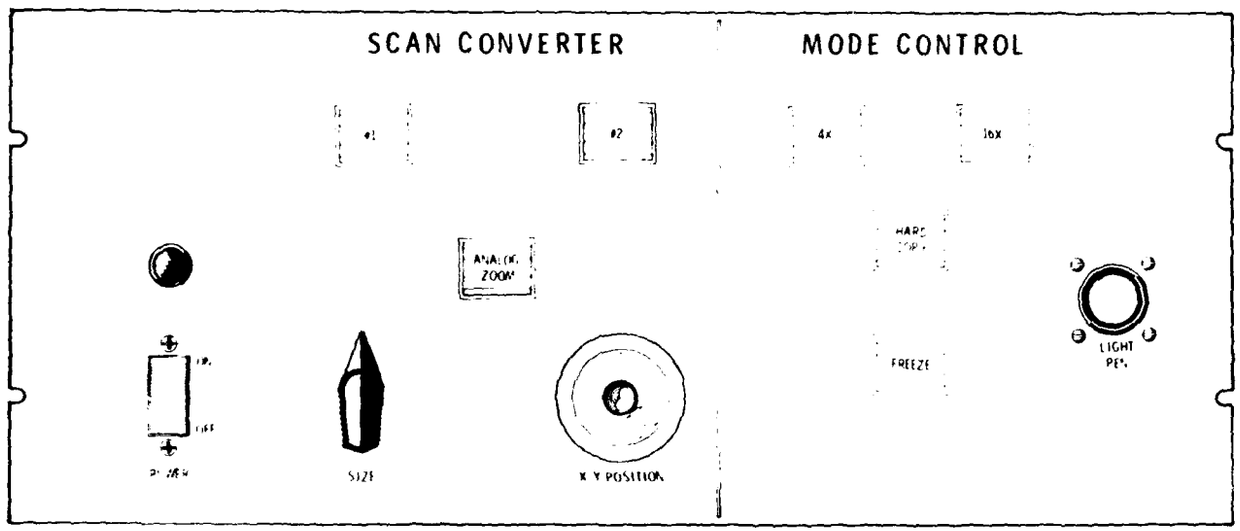

FIGURE 4.16 GROUND SYSTEM OPERATORS PANEL

TABLE IV-1

SHARED FPA GROUND SYSTEM CONTROL PANEL

Label	Control Type	Definition
No. 1	Lamp	Indicates read activity on scan converter 1
No. 2	Lamp	Indicates read activity on scan converter 2
Analog zoom	Push on/push off	Places scan converter in use into the zoom mode
	Light	Indicates zoom mode
Size	Pot (single turn)	Adjusts amount of zoom
x-y position	Joystick	Selects area to be zoomed
4X	Lamp	Indicates 4X replay zoom
16X	Lamp	Indicates 16X replay zoom
Hard copy	Mom switch	Activates hard copy output from scan converter
	Lamp	Indicates hard copy mode
Freeze	Push on/push off	Freezes frame being viewed so that replay zoom can be used
	Lamp	Indicates freeze mode

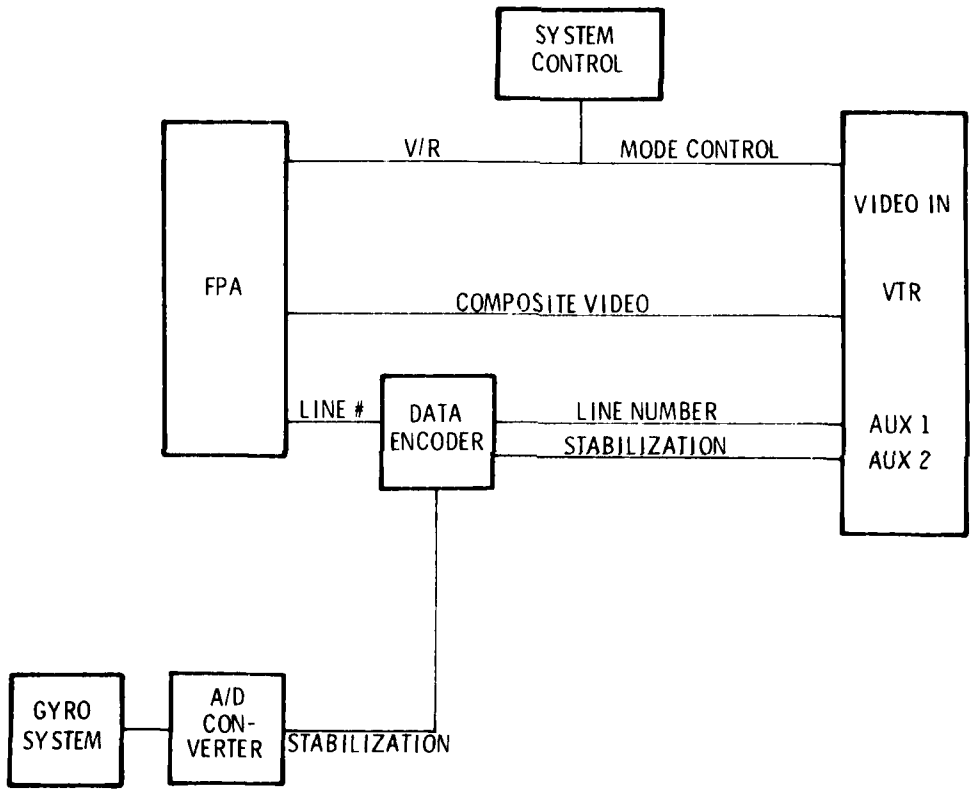

FIGURE 4.17 AIRBORNE SYSTEM ELECTRONICS

in the proper format and with the best possible signal-to-noise ratio.

Auxiliary information is also recorded. The data encoder converts the digital signals representing line number and stabilization into the proper form for recording.

The system control panel is the interface between the operator and both the VTR and system electonics.

SFP GROUND SYSTEM

The function of the ground system, shown as a block diagram in figure 4.18, is to process the data and video information from the VTR and to present this to either a TV or hard copy recorder. A μP is included in this system to control the activity of the various blocks. It will calculate the switching times of the two interfaces and control the read/erase/write operations of the scan converters. These decisions will be made based on inputs from the control panel, light pen and data decoder.

Data from the auxiliary channels of the VTR is domodulated and routed to either the μP or the scan converter interface. The scan converter interface takes the composite video and stabilization data, separates the line sync and generates the write sweeps for the scan converter. The line sync is also sent to the μP for frame size determination. The routing information for the video and sweeps is then fed back to the interface from the μP.

The scan converters are used alternately and have identical capabilities. During the normal (low resolution) mode, one scan converter will be written upon until it is within one erase cycle time of being full. At this time, the other scan converter, which had been in a read mode, will be erased and the TV will be blanked for the erase cycle. On completion of the erase cycle, this converter will take over the write operation while the first reads to the TV.

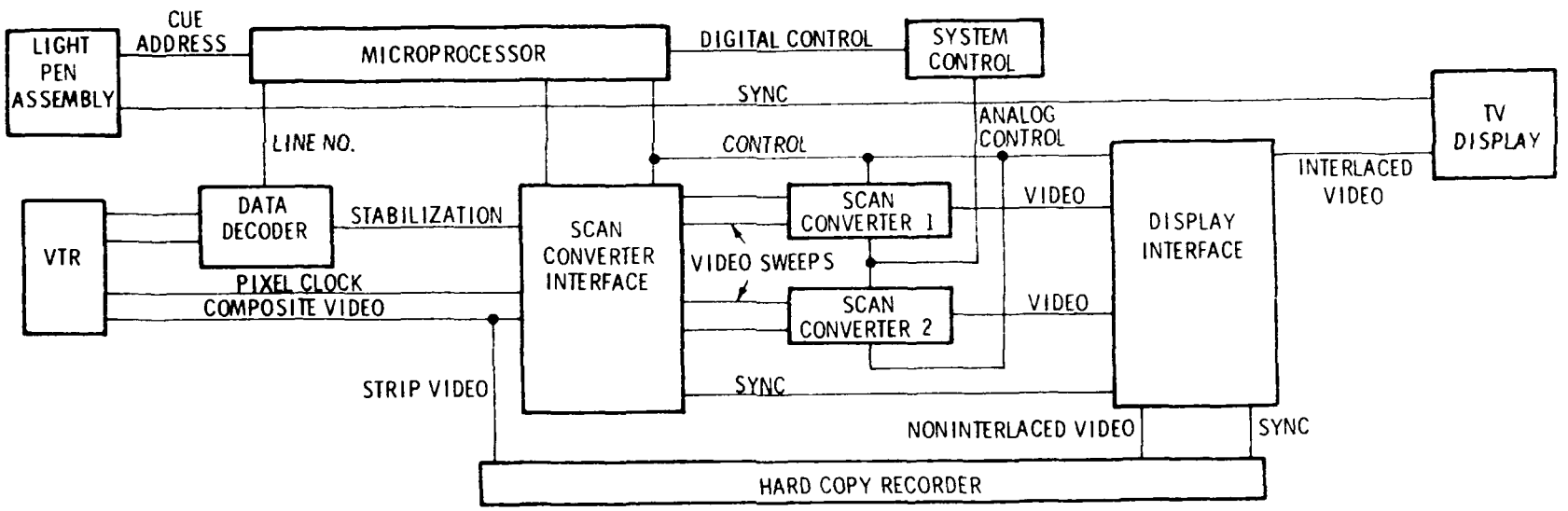

FIGURE 4.18 SHARED FOCAL PLANE GROUND SYSTEM

The light pen is used to cue a target for a higher resolution replay zoom operation. Two 4X replay zoom operations are permissible on a low resolution frame for a total blowup of 16X. When a target is cued, the light pen electronics will output a display x, y address. The replay cue locations are calculated by the μP based on the light pen data. This information is compared against the incoming data by the interface and used to control sweep and frame start times for the scan converter.

During a replay zoom operation, the converter in the read mode will be frozen and the other converter will handle the zoom. A second zoom operation will alternate these functions.

Hard copy recording will operate in two modes. In the low resolution mode, the video is routed directly to the recorder for a strip recording. For a high resolution recording, the image is taken from the last scan converter used in a replay zoom. This operation will take the last frame viewed, blank the TV and read the appropriate scan converter in a slow scan, noninterlaced mode to the recorder. Upon completion of the record frame, the scan converter will revert to a normal TV read. Sync for the recorder will be provided through the interfaces for either recorder mode.

The control panel will be used by the operator for mode control. The normal video input mode is continuous viewing of the video as it is played back. In addition, a freeze mode is allowed. In this mode, the replay zoom operation can be done for a higher resolution look at the data. The output modes of TV display or hard copy are also selected by the panel. The analog controls for the scan converters will be relocated onto this panel. Indicator lights will inform the operator of system status.

SECTION V
PERFORMANCE

There is really only one measure of imagery with meaning for this analysis - what can be resolved. However, resolution is a function of all the effects of atmosphere, lens quality, detector quality and system degradation. For a system in general:

$$SNR_{system} = \frac{MTF_{system}\, C\, S_B}{noise}$$

where:

C = contrast at the image plane

S_B = level of background signal

In this section, each of these terms will be assessed and the expected results for this system in particular will be generated. First, the various sources of signal degradation in terms of both noise and contrast must be considered. The signal is defined by the spectral level of illumination accounting for solar elevation, atmospheric transmission and weather conditions, and the spectral reflectance of both target and background. Photon noise is associated with this signal. This signal then passes through the atmosphere, where absorption, outscatter and inscatter occur. It is assumed that the atmosphere does not introduce any MTF degradation other than flat contrast reduction. With inscatter, there is a new source of photon noise. The lens then collects this signal and noise and defines the image plane illumination by its f number and transmission. The lens, in addition, degrades the contrast by its MTF. Near this part of the system can be various spectral filters.

At the image plane, the signal is translated, in this case, into a voltage signal by the CCD. This CCD has a certain spectral response and

is operated at a given integration time which defines the signal level and resolution. Further, the CCD degrades contrast by its MTF and introduces more sources of noise. At this point, there are several MTF's to be accounted for: that of the pixel, image motion and crosstalk. Other system components which process, store and display the CCD output signal may degrade the signal by introducing more noise and/or reducing contrast. At the display, a minimum signal-to-noise ratio is required by the observer to recognize objects imaged by the system.

For a light target on dark background, the noise level against which the signal must be measured is the noise level in the background. In the following, certain assumptions have been made: pixel-to-pixel nonuniformities have been corrected so that these are not a source of noise; the target and background reflectances are spectrally neutral; and CCD crosstalk has been effectively eliminated by the use of a filter to attenuate the near-infrared radiation which is the major source of crosstalk. The noise figure (N) is then defined by:

$$N = \left[N_D^2 + \rho_B T_A S'_B + K (1 - T_A) \rho_B S'_B + (\rho_B T_A S'_B)^2 \sum \frac{1}{SNR^2} \right]^{1/2}$$

where:

N	=	detector noise in electrons
ρ_B	=	background reflectance
T_A	=	atmospheric transmission
S'_B	=	background level in electrons as though there were no intervening atmosphere and it has a reflectance of 1
K	=	horizon-to-background luminance ratio
$\sum \frac{1}{SNR^2}$	=	sum of reciprocal squared signal-to-noise ratios for the rest of the system

The signal level (S) at the image plane is given by:

$$S = \left[\tau C_T\right] \left[T_A \ \rho_B \ S'_B\right]$$

where:

τ = atmospheric contrast transference $= \dfrac{1}{1 + K\left(\dfrac{1-T_A}{T_A}\right)}$

C_T = inherent target-to-background contrast $= \dfrac{\rho_T - \rho_B}{\rho_B}$

The required system MTF (MTF_{system}) is:

$$MTF_{system} = \frac{N}{S} \ SNR_{min}$$

where: SNR_{min} is the minimum required signal-to-noise ratio required by the observer. As a rough figure, given a bar target, a $SNR_{min} = 2.25$ will allow recognition of that bar.

The following is an assessment of the signal degradation for each of the system components other than the lens. The lens MTF's were presented in section III.

SHARED FOCAL PLANE SYSTEM SIGNAL DEGRADATION

A. CCD and Preamp

- Resolution limits of the CCD are determined by the cell size of the CCD. The theoretical resolution limit of the CCD has always been met in the lab tests.
- The dynamic range of the CCD is somewhat open to interpretation. Specifications list a typical figure of 500:1. In testing the GFE array, a typical figure of 300:1 was measured at the output of the

preamp. This figure does not, however, consider pattern noise. This type of noise is due to PRNU. Typical values of PRNU are 25 mV at a signal level of 350 mV. At the preamp output, a white noise level of 7 mV is present. The maximum signal level is 2.1 V.

B. A/D And Digital Subsystem

- System degradation in this section is due to least significant bit ambiguity of the A/D converter. This amounts to 1 part in 256.

C. Tape Recorder RCA Advisor 62B

- The specified signal-to-noise ratio equals 40 dB, or ratio of 100:1.
- Single channel use would limit the sytem bandwidth to 6 MHz. Use of both channels would allow full system bandwidth to be recorded using simultaneous recording of two lines of video.
- Inter channel time displacement error could add a 25-ns time displacement error. This would equal approximately 1/10 pixel, gaussian.

D. Replay Zoom Processing

- The replay zoom video processor can add as much as 1/2 pixel of gaussian positional jitter to the display in the zoom mode.

E. Scan Converter

- Resolution - assuming a square format, the scan converter capability at 50 percent modulation is 945 lines. With a replay

zoom of 16:1, approximately 600 line capability is required. Thus, the scan converter should not limit the system resolution.

- Based on past use of the PEP 500, the output will be limited to approximately 10 grey levels. The estimated signal-to-noise ratio is 30 to 35 dB for ratios of 30:1 to 55:1.

F. Monitor

The TV monitor is capable of displaying the scan converted video without degradation.

G. Hard Copy Recorder

In the strip mode, the recorder will limit the system resolution to approximately 1000 lines. In the replay zoom mode it can record all presented information without degradation.

Both the pixel misregistration errors (C and D) add in rms fashion.

With these figures, a numerical calculation of expected performance can proceed. Using the lower figure for scan converter signal-to-noise ratio, the reciprocal square sum of the tape recorder and scan converter is .0011. The detector noise is nominally 237 electrons according to the chip specifications. The horizon-to-background luminance factor is from available data $.3/\rho_B$. The target reflectance has been nominally given as .3 for Naval grey, while the typical sea reflectance is .05. However, background reflectances up to .25 in steps of .05 will be calculated. The atmospheric transmission (T_A) is given by:

$$T_A = \exp.\left[\frac{-3.912}{\text{visibility}} R\, G(A)\right]$$

where:

R = range

G(A) = correction factor for slant path from altitude A; since the depression angle is 30°, A = R/2.

S'_B is a function of solar elevation, atmospheric transmission, lens and detector characteristics. These have been calculated as a function of solar elevation and visibility for the 18-inch fl lens and CCD 121H detector. Their values are given in table V-1. Using these values and the other system data, the required system MTF's have been calculated as a function of solar elevations, range, background reflectance and visibilities. These can be found in table V-2.

Finally, the actural system MTF is a product of the lens MTF, image motion MTF, CCD MTF and pixel registration uncertainty MTF's for both the tape recorder and zoom operation. Because of pixel geometry and image smear, the limiting resolution is defined in the direction of scan. The image motion MTF is a sync function because of the discrete time chopping nature of the imaging process. Image motion is defined in terms of pixels of smear by the platform velocity, range, integration time, focal length and pixel dimension. The CCD MTF is a sync squared function first because of the pixel geometry and because of the discrete nature of readout which produces an uncertainty due to phase relationships. Both the pixel registration MTF's are gaussian. The various MTF functions are given in tables V-3 and V-4 and their product as a function of range and fraction of Nyquist frequency is shown in table V-5 and graphed in figure 5.1 using the 18-inch fl lens.

To use these tables, find the "required MTF" table pertaining to the conditions at hand, read a required MTF, using the figure and the range calculate the frequency at which that MTF is obtained on the system MTF table. The ground resolution in inches is then given by:

$$GR(\text{inches}) = \frac{.89}{f} R(1000')$$

Several graphs for typical conditions have been generated and are shown in figures 5.2 through 5.4.

TABLE V-1

BACKGROUND ELECTRONS (UPPER LIMIT): S_B'

VS. VISIBILITY AND SOLAR ELEVATION

Solar Elevation \ Visibility (km)	23.5	15	10	5
5.0	0.1882E 05	0.1354E 05	0.8581E 04	0.2183E 04
10.0	0.5079E 05	0.4305E 05	0.3424E 05	0.1722E 05
15.0	0.8442E 05	0.7555E 05	0.6479E 05	0.8442E 05
20.0	0.1184E 06	0.1089E 06	0.9699E 05	0.6843E 05
25.0	0.1525E 06	0.1424E 06	0.1297E 06	0.9780E 05
30.0	0.1861E 06	0.1757E 06	0.1622E 06	0.1278E 06
35.0	0.2189E 06	0.2082E 06	0.1942E 06	0.1578E 06
40.0	0.2506E 06	0.2397E 06	0.2253E 06	0.1871E 06
45.0	0.2810E 06	0.2699E 06	0.2551E 06	0.2155E 06
50.0	0.3098E 06	0.2984E 06	0.2833E 06	0.2424E 06
55.0	0.3366E 06	0.3250E 06	0.3096E 06	0.2676E 06
60.0	0.3611E 06	0.3494E 06	0.3337E 06	0.2907E 06
65.0	0.3832E 06	0.3713E 06	0.3553E 06	0.3115E 06
70.0	0.4026E 06	0.3905E 06	0.3743E 06	0.3297E 06
75.0	0.4191E 06	0.4068E 06	0.3904E 06	0.3451E 06
80.0	0.4324E 06	0.4200E 06	0.4034E 06	0.3574E 06
85.0	0.4425E 06	0.4299E 06	0.4131E 06	0.3665E 06
90.0	0.4491E 06	0.4363E 06	0.4193E 06	0.3722E 06

TABLE V-2

REQUIRED SYSTEM MTF VS SOLAR ELEVATION AND RANGE

Visibility P_B C_T^{-1} S = solar elevation R = range in ft x 1000

	1	2	3	4	5	6	7	8	9	10	11	12
[illegible]	[illegible]	[illegible]	[illegible]	[illegible]	[illegible]	[illegible]	[illegible]	[illegible]	[illegible]	[illegible]	[illegible]	[illegible]

TABLE V-2 (Cont.)

TABLE V-2 (Cont.)

15.00000 0.2000 0.5000

[illegible]	0.513[illegible]	0.[illegible]	0.[illegible]	[illegible]	[illegible]	[illegible]	[illegible]	[illegible]	[illegible]	[illegible]	[illegible]	[illegible]	[illegible]	[illegible]	[illegible]	0.3200
0.0	0.2313	0.[illegible]	0.[illegible]	[illegible]	[illegible]	[illegible]	[illegible]	[illegible]	[illegible]	[illegible]	[illegible]	[illegible]	[illegible]	[illegible]	[illegible]	[illegible]
[illegible]	0.1922	0.2149	[illegible]	[illegible]	[illegible]	[illegible]	[illegible]	[illegible]	[illegible]	[illegible]	[illegible]	[illegible]	[illegible]	[illegible]	[illegible]	[illegible]
20.0	0.1806	0.2001	0.2193	0.2366	[illegible]	[illegible]	[illegible]	[illegible]	[illegible]	[illegible]	[illegible]	[illegible]	[illegible]	[illegible]	[illegible]	[illegible]
25.0	0.1756	0.1942	0.2115	[illegible]	[illegible]	[illegible]	[illegible]	[illegible]	[illegible]	[illegible]	[illegible]	[illegible]	[illegible]	[illegible]	[illegible]	0.3250
30.0	0.1730	0.1909	0.2077	[illegible]	[illegible]	[illegible]	0.2343	[illegible]	[illegible]	[illegible]	[illegible]	[illegible]	[illegible]	[illegible]	0.3018	0.3159
35.0	0.1715	0.1899	0.2056	[illegible]	[illegible]	[illegible]	[illegible]	[illegible]	[illegible]	[illegible]	[illegible]	[illegible]	[illegible]	[illegible]	0.2992	0.3079
40.0	0.1707	0.1878	0.2041	[illegible]	[illegible]	[illegible]	0.2464	[illegible]	[illegible]	[illegible]	[illegible]	[illegible]	[illegible]	[illegible]	[illegible]	[illegible]
45.0	0.1707	0.1870	0.2031	[illegible]	[illegible]	[illegible]	[illegible]	[illegible]	[illegible]	[illegible]	[illegible]	[illegible]	[illegible]	[illegible]	[illegible]	[illegible]
50.0	0.1694	0.1864	0.2024	[illegible]	[illegible]	[illegible]	[illegible]	[illegible]	[illegible]	[illegible]	[illegible]	[illegible]	[illegible]	[illegible]	[illegible]	[illegible]
55.0	0.1691	0.1860	0.2017	[illegible]	[illegible]	[illegible]	0.419[illegible]	[illegible]	[illegible]	[illegible]	[illegible]	[illegible]	[illegible]	[illegible]	[illegible]	0.3021
60.0	0.1688	0.1857	0.2015	[illegible]	[illegible]	[illegible]	[illegible]	[illegible]	[illegible]	[illegible]	[illegible]	[illegible]	[illegible]	[illegible]	[illegible]	[illegible]
[illegible]	0.1686	0.1854	0.2012	[illegible]	[illegible]	0.2400	[illegible]	[illegible]	[illegible]	[illegible]	[illegible]	[illegible]	[illegible]	[illegible]	[illegible]	0.2982
70.0	0.1685	0.1853	[illegible]	[illegible]	[illegible]	[illegible]	[illegible]	[illegible]	[illegible]	[illegible]	[illegible]	[illegible]	[illegible]	[illegible]	[illegible]	[illegible]
75.0	0.1684	0.1851	[illegible]	[illegible]	[illegible]	[illegible]	[illegible]	[illegible]	[illegible]	[illegible]	[illegible]	[illegible]	[illegible]	[illegible]	[illegible]	0.2971
80.0	0.1683	0.1850	0.2007	[illegible]	[illegible]	0.2400	[illegible]	[illegible]	[illegible]	[illegible]	[illegible]	[illegible]	[illegible]	[illegible]	[illegible]	0.2966
85.0	0.1682	0.1849	0.2006	[illegible]	[illegible]	0.2399	[illegible]	[illegible]	[illegible]	[illegible]	[illegible]	[illegible]	[illegible]	[illegible]	[illegible]	0.2960
90.0	0.1682	0.1849	0.2005	[illegible]	[illegible]	0.2398	[illegible]	[illegible]	[illegible]	[illegible]	[illegible]	[illegible]	[illegible]	[illegible]	[illegible]	0.2964

[illegible].00000 [illegible]

[illegible]	1.0469	1.1890	[illegible]	[illegible]	[illegible]	[illegible]	[illegible]	[illegible]	[illegible]	[illegible]	[illegible]	[illegible]	[illegible]	[illegible]	[illegible]	0.4143
[illegible]	0.5178	[illegible]	[illegible]	[illegible]	[illegible]	[illegible]	[illegible]	[illegible]	[illegible]	[illegible]	[illegible]	[illegible]	[illegible]	[illegible]	[illegible]	[illegible]
[illegible]	0.4[illegible]	[illegible]	[illegible]	[illegible]	[illegible]	[illegible]	[illegible]	[illegible]	[illegible]	[illegible]	[illegible]	[illegible]	[illegible]	[illegible]	[illegible]	[illegible]
[illegible]	0.4314	[illegible]	[illegible]	[illegible]	[illegible]	[illegible]	[illegible]	[illegible]	[illegible]	[illegible]	[illegible]	[illegible]	[illegible]	[illegible]	[illegible]	[illegible]
5.0	0.4231	0.4692	[illegible]	[illegible]	[illegible]	0.5802	[illegible]	[illegible]	[illegible]	[illegible]	[illegible]	[illegible]	[illegible]	[illegible]	[illegible]	[illegible]
10.0	0.4188	0.4639	[illegible]	[illegible]	[illegible]	[illegible]	[illegible]	[illegible]	[illegible]	[illegible]	[illegible]	[illegible]	[illegible]	[illegible]	[illegible]	[illegible]
[illegible]	0.4162	0.4608	[illegible]	[illegible]	[illegible]	[illegible]	[illegible]	[illegible]	[illegible]	[illegible]	[illegible]	[illegible]	[illegible]	[illegible]	[illegible]	0.6800
20.0	0.4145	0.4588	[illegible]	[illegible]	[illegible]	[illegible]	[illegible]	[illegible]	[illegible]	[illegible]	[illegible]	[illegible]	[illegible]	[illegible]	[illegible]	[illegible]
[illegible]	0.4135	[illegible]	[illegible]	[illegible]	[illegible]	[illegible]	[illegible]	[illegible]	[illegible]	[illegible]	[illegible]	[illegible]	[illegible]	[illegible]	[illegible]	0.6786
[illegible]	0.4127	0.4464	[illegible]	[illegible]	[illegible]	[illegible]	[illegible]	[illegible]	[illegible]	[illegible]	[illegible]	[illegible]	[illegible]	[illegible]	[illegible]	[illegible]
[illegible]	0.4122	[illegible]	[illegible]	[illegible]	[illegible]	[illegible]	[illegible]	[illegible]	[illegible]	[illegible]	[illegible]	[illegible]	[illegible]	[illegible]	[illegible]	0.6699
[illegible]	0.4117	[illegible]	[illegible]	[illegible]	[illegible]	[illegible]	[illegible]	[illegible]	[illegible]	[illegible]	[illegible]	[illegible]	[illegible]	[illegible]	[illegible]	[illegible]
[illegible]	0.4114	0.4438	[illegible]	[illegible]	[illegible]	[illegible]	[illegible]	[illegible]	[illegible]	[illegible]	[illegible]	[illegible]	[illegible]	[illegible]	[illegible]	[illegible]
[illegible]	0.4112	0.4435	[illegible]	[illegible]	[illegible]	[illegible]	[illegible]	[illegible]	[illegible]	[illegible]	[illegible]	[illegible]	[illegible]	[illegible]	[illegible]	[illegible]
[illegible]	0.4110	0.4432	[illegible]	[illegible]	[illegible]	[illegible]	[illegible]	[illegible]	[illegible]	[illegible]	[illegible]	[illegible]	[illegible]	[illegible]	[illegible]	[illegible]
[illegible]	0.4109	0.4431	[illegible]	[illegible]	[illegible]	[illegible]	[illegible]	[illegible]	[illegible]	[illegible]	[illegible]	[illegible]	[illegible]	[illegible]	[illegible]	[illegible]
[illegible]	0.4107	0.4429	[illegible]	[illegible]	[illegible]	[illegible]	[illegible]	[illegible]	[illegible]	[illegible]	[illegible]	[illegible]	[illegible]	[illegible]	[illegible]	[illegible]
[illegible]	0.4107	0.4429	[illegible]	[illegible]	[illegible]	[illegible]	[illegible]	[illegible]	[illegible]	[illegible]	[illegible]	[illegible]	[illegible]	[illegible]	[illegible]	0.6643

[illegible].00000 [illegible]

[illegible]	[illegible]	[illegible]	[illegible]	[illegible]	[illegible]	[illegible]	[illegible]	[illegible]	[illegible]	[illegible]	[illegible]	[illegible]	[illegible]	[illegible]	[illegible]	[illegible]
[illegible]	[illegible]	[illegible]	[illegible]	[illegible]	[illegible]	[illegible]	[illegible]	[illegible]	[illegible]	[illegible]	[illegible]	[illegible]	[illegible]	[illegible]	[illegible]	0.330
[illegible]	[illegible]	[illegible]	[illegible]	[illegible]	[illegible]	[illegible]	[illegible]	[illegible]	[illegible]	[illegible]	[illegible]	[illegible]	[illegible]	[illegible]	[illegible]	[illegible]
[illegible]	0.0515	[illegible]	[illegible]	[illegible]	[illegible]	[illegible]	[illegible]	[illegible]	[illegible]	[illegible]	[illegible]	[illegible]	[illegible]	[illegible]	[illegible]	[illegible]
[illegible]	0.0525	0.0633	0.0881	0.1136	[illegible]	[illegible]	[illegible]	[illegible]	[illegible]	[illegible]	[illegible]	[illegible]	[illegible]	[illegible]	[illegible]	[illegible]
[illegible]	0.0377	0.0469	[illegible]	[illegible]	[illegible]	[illegible]	[illegible]	[illegible]	[illegible]	[illegible]	[illegible]	[illegible]	[illegible]	[illegible]	[illegible]	[illegible]
[illegible]	0.0318	[illegible]	[illegible]	[illegible]	[illegible]	[illegible]	[illegible]	[illegible]	[illegible]	[illegible]	[illegible]	[illegible]	[illegible]	[illegible]	[illegible]	[illegible]
[illegible]	0.0325	0.0488	[illegible]	[illegible]	[illegible]	[illegible]	[illegible]	[illegible]	[illegible]	[illegible]	[illegible]	[illegible]	[illegible]	[illegible]	[illegible]	[illegible]
[illegible]	0.0315	0.0466	[illegible]	[illegible]	[illegible]	[illegible]	[illegible]	[illegible]	[illegible]	[illegible]	[illegible]	[illegible]	[illegible]	[illegible]	[illegible]	[illegible]
[illegible]	0.0305	[illegible]	[illegible]	[illegible]	[illegible]	[illegible]	[illegible]	[illegible]	[illegible]	[illegible]	[illegible]	[illegible]	[illegible]	[illegible]	[illegible]	[illegible]
[illegible]	0.0299	0.0438	[illegible]	[illegible]	[illegible]	[illegible]	[illegible]	[illegible]	[illegible]	[illegible]	[illegible]	[illegible]	[illegible]	[illegible]	[illegible]	[illegible]
[illegible]	0.0295	0.0435	[illegible]	[illegible]	[illegible]	[illegible]	[illegible]	[illegible]	[illegible]	[illegible]	[illegible]	[illegible]	[illegible]	[illegible]	[illegible]	[illegible]
[illegible]	0.0291	[illegible]	[illegible]	[illegible]	[illegible]	[illegible]	[illegible]	[illegible]	[illegible]	[illegible]	[illegible]	[illegible]	[illegible]	[illegible]	[illegible]	[illegible]
[illegible]	0.0288	[illegible]	[illegible]	[illegible]	[illegible]	[illegible]	[illegible]	[illegible]	[illegible]	[illegible]	[illegible]	[illegible]	[illegible]	[illegible]	[illegible]	[illegible]
[illegible]	0.0286	[illegible]	[illegible]	[illegible]	[illegible]	[illegible]	[illegible]	[illegible]	[illegible]	[illegible]	[illegible]	[illegible]	[illegible]	[illegible]	[illegible]	[illegible]
[illegible]	0.0284	0.0417	[illegible]	[illegible]	[illegible]	[illegible]	[illegible]	[illegible]	[illegible]	[illegible]	[illegible]	[illegible]	[illegible]	[illegible]	[illegible]	[illegible]
[illegible]	0.0283	0.0410	[illegible]	[illegible]	[illegible]	[illegible]	[illegible]	[illegible]	[illegible]	[illegible]	[illegible]	[illegible]	[illegible]	[illegible]	[illegible]	[illegible]
[illegible]	0.0283	0.0409	[illegible]	[illegible]	[illegible]	[illegible]	[illegible]	[illegible]	[illegible]	[illegible]	[illegible]	[illegible]	[illegible]	[illegible]	[illegible]	0.1646

10.00000 [illegible]

[illegible]	0.4[illegible]	[illegible]	[illegible]	[illegible]	[illegible]	[illegible]	[illegible]	[illegible]	[illegible]	[illegible]	[illegible]	[illegible]	[illegible]	[illegible]	[illegible]	[illegible]
[illegible]	0.13[illegible]	0.1[illegible]	[illegible]	[illegible]	[illegible]	[illegible]	[illegible]	[illegible]	[illegible]	[illegible]	[illegible]	[illegible]	[illegible]	[illegible]	[illegible]	[illegible]
[illegible]	[illegible]	[illegible]	[illegible]	[illegible]	[illegible]	[illegible]	[illegible]	[illegible]	[illegible]	[illegible]	[illegible]	[illegible]	[illegible]	[illegible]	[illegible]	[illegible]
[illegible]	[illegible]	[illegible]	[illegible]	[illegible]	[illegible]	[illegible]	[illegible]	[illegible]	[illegible]	[illegible]	[illegible]	[illegible]	[illegible]	[illegible]	[illegible]	[illegible]
[illegible]	0.0615	0.0[illegible]	[illegible]	[illegible]	[illegible]	[illegible]	[illegible]	[illegible]	[illegible]	[illegible]	[illegible]	[illegible]	[illegible]	[illegible]	[illegible]	[illegible]
[illegible]	0.0562	0.0[illegible]	[illegible]	[illegible]	[illegible]	[illegible]	[illegible]	[illegible]	[illegible]	[illegible]	[illegible]	[illegible]	[illegible]	[illegible]	[illegible]	[illegible]
[illegible]	0.0563	0.0[illegible]	[illegible]	[illegible]	[illegible]	[illegible]	[illegible]	[illegible]	[illegible]	[illegible]	[illegible]	[illegible]	[illegible]	[illegible]	[illegible]	[illegible]
[illegible]	0.0551	0.0[illegible]	[illegible]	[illegible]	[illegible]	[illegible]	[illegible]	[illegible]	[illegible]	[illegible]	[illegible]	[illegible]	[illegible]	[illegible]	[illegible]	[illegible]
[illegible]	0.0[illegible]	0.0[illegible]	[illegible]	[illegible]	[illegible]	[illegible]	[illegible]	[illegible]	[illegible]	[illegible]	[illegible]	[illegible]	[illegible]	[illegible]	[illegible]	[illegible]
[illegible]	0.0[illegible]	0.0[illegible]	[illegible]	[illegible]	[illegible]	[illegible]	[illegible]	[illegible]	[illegible]	[illegible]	[illegible]	[illegible]	[illegible]	[illegible]	[illegible]	[illegible]
[illegible]	0.0533	0.0[illegible]	0.0[illegible]	[illegible]	[illegible]	[illegible]	[illegible]	[illegible]	[illegible]	[illegible]	[illegible]	[illegible]	[illegible]	[illegible]	[illegible]	[illegible]
[illegible]	0.0530	0.0[illegible]	0.0[illegible]	[illegible]	[illegible]	[illegible]	[illegible]	[illegible]	[illegible]	[illegible]	[illegible]	[illegible]	[illegible]	[illegible]	[illegible]	[illegible]
[illegible]	0.0527	0.0[illegible]	[illegible]	[illegible]	[illegible]	[illegible]	[illegible]	[illegible]	[illegible]	[illegible]	[illegible]	[illegible]	[illegible]	[illegible]	[illegible]	[illegible]
[illegible]	0.0525	0.0[illegible]	[illegible]	[illegible]	[illegible]	[illegible]	[illegible]	[illegible]	[illegible]	[illegible]	[illegible]	[illegible]	[illegible]	[illegible]	[illegible]	[illegible]
[illegible]	0.0523	0.0[illegible]	[illegible]	[illegible]	[illegible]	[illegible]	[illegible]	[illegible]	[illegible]	[illegible]	[illegible]	[illegible]	[illegible]	[illegible]	[illegible]	[illegible]
[illegible]	[illegible]	[illegible]	[illegible]	[illegible]	[illegible]	[illegible]	[illegible]	[illegible]	[illegible]	[illegible]	[illegible]	[illegible]	[illegible]	[illegible]	[illegible]	[illegible]
[illegible]	0.0[illegible]	0.0[illegible]	[illegible]	[illegible]	[illegible]	[illegible]	[illegible]	[illegible]	[illegible]	[illegible]	[illegible]	[illegible]	[illegible]	[illegible]	[illegible]	[illegible]

TABLE V-2 (Cont.)

10.0000 [illegible]

[illegible]	[illegible]	[illegible]	[illegible]	[illegible]	[illegible]	[illegible]	[illegible]	[illegible]	[illegible]	[illegible]	[illegible]	[illegible]	[illegible]	[illegible]	[illegible]

TABLE V-2 (Cont.)

5.00000 0.10000 1.00000

5.0	2.6966	4.8263	7.8826	11.5671	15.7183	20.1315	[illegible]	[illegible]	[illegible]	[illegible]	[illegible]	[illegible]	[illegible]	[illegible]	[illegible]
10.0	0.3541	0.6327	1.0059	1.4603	1.9724	2.5251	3.0924	3.6646	4.1847	4.7127	5.1122	[illegible]	[illegible]	[illegible]	[illegible]
15.0	0.1643	0.2886	0.4542	0.6555	0.8960	1.1706	1.4662	1.8723	2.2147	2.5255	[illegible]	[illegible]	[illegible]	[illegible]	[illegible]
20.0	0.1135	0.1937	0.2997	0.4357	0.5751	0.7618	0.9631	1.1816	1.4[illegible]	1.6881	[illegible]	[illegible]	[illegible]	[illegible]	[illegible]
25.0	0.0935	0.1551	0.2346	0.3296	0.4398	0.5726	0.7161	0.8677	[illegible]	[illegible]	[illegible]	[illegible]	[illegible]	[illegible]	[illegible]
30.0	0.0839	0.1359	0.2017	0.2794	0.3687	0.4683	0.5[illegible]	0.6[illegible]	[illegible]	[illegible]	[illegible]	[illegible]	[illegible]	[illegible]	[illegible]
35.0	0.0787	0.1252	0.1828	0.2501	0.3269	0.4187	0.5213	[illegible]	0.7[illegible]	[illegible]	[illegible]	[illegible]	[illegible]	[illegible]	[illegible]
40.0	0.0[illegible]	0.1186	[illegible]	[illegible]	[illegible]	[illegible]	[illegible]	[illegible]	[illegible]	[illegible]	[illegible]	[illegible]	[illegible]	[illegible]	[illegible]
45.0	0.0735	0.1143	0.1632	0.2171	0.2[illegible]	0.3[illegible]	0.4[illegible]	0.5[illegible]	[illegible]	[illegible]	[illegible]	[illegible]	[illegible]	[illegible]	[illegible]
50.0	0.0722	0.1113	0.1578	0.2101	0.2697	0.3361	0.4[illegible]	0.4[illegible]	0.5[illegible]	[illegible]	[illegible]	[illegible]	[illegible]	[illegible]	[illegible]
55.0	0.0712	0.1092	0.1539	0.2041	0.2597	0.3248	0.3[illegible]	0.4[illegible]	0.5[illegible]	[illegible]	[illegible]	[illegible]	[illegible]	[illegible]	[illegible]
60.0	0.0705	0.1077	0.1511	0.1994	0.2528	0.3106	0.3[illegible]	0.4[illegible]	0.5[illegible]	[illegible]	[illegible]	[illegible]	[illegible]	[illegible]	[illegible]
65.0	0.0700	0.1065	0.1489	0.1959	0.2475	0.3025	0.3[illegible]	0.4[illegible]	0.5[illegible]	[illegible]	[illegible]	[illegible]	[illegible]	[illegible]	[illegible]
70.0	0.0696	0.1057	0.1473	0.1933	0.2436	0.3018	0.3673	0.4[illegible]	0.5[illegible]	[illegible]	[illegible]	[illegible]	[illegible]	[illegible]	[illegible]
75.0	0.0693	0.1050	0.1461	0.1913	0.2406	0.2[illegible]	0.3[illegible]	0.4[illegible]	0.5[illegible]	[illegible]	[illegible]	[illegible]	[illegible]	[illegible]	[illegible]
80.0	0.0691	0.1046	0.1453	0.1899	0.2384	0.2941	0.3572	0.4211	0.4[illegible]	0.5[illegible]	[illegible]	[illegible]	[illegible]	[illegible]	[illegible]
85.0	0.0690	0.1043	0.1447	0.1887	0.2370	0.2923	0.3542	0.4175	0.4[illegible]	0.5[illegible]	[illegible]	[illegible]	[illegible]	[illegible]	[illegible]
90.0	0.0689	0.1041	0.1443	0.1883	0.2361	0.2910	0.3525	0.4152	0.4[illegible]	0.5[illegible]	[illegible]	[illegible]	[illegible]	[illegible]	[illegible]

5.00000 0.15000 1.00000

5.0	3.0350	5.1330	7.8[illegible]	11.0[illegible]	14.9[illegible]	19.3[illegible]	[illegible]	[illegible]	[illegible]	[illegible]	[illegible]	[illegible]	[illegible]	[illegible]	[illegible]
10.0	0.4151	0.6816	1.0369	1.4663	1.9[illegible]	2.5[illegible]	3.[illegible]	[illegible]	[illegible]	[illegible]	[illegible]	[illegible]	[illegible]	[illegible]	[illegible]
15.0	0.2073	0.3296	0.4886	0.6788	0.8990	1.1631	1.4[illegible]	1.7[illegible]	[illegible]	[illegible]	[illegible]	[illegible]	[illegible]	[illegible]	[illegible]
20.0	0.1557	0.2373	0.3408	0.4630	0.6034	0.7711	0.9[illegible]	1.1[illegible]	1.3[illegible]	[illegible]	[illegible]	[illegible]	[illegible]	[illegible]	[illegible]
25.0	0.1368	0.2019	0.2823	0.3755	0.4813	0.6089	0.7507	0.9002	[illegible]	[illegible]	[illegible]	[illegible]	[illegible]	[illegible]	[illegible]
30.0	0.1281	0.1866	0.2540	0.3321	0.4197	0.5228	0.6412	0.7615	0.8[illegible]	[illegible]	[illegible]	[illegible]	[illegible]	[illegible]	[illegible]
35.0	0.1235	0.1762	0.2382	0.3076	0.3844	0.4710	0.5703	0.6745	[illegible]	[illegible]	[illegible]	[illegible]	[illegible]	[illegible]	[illegible]
40.0	0.1208	0.1708	0.2307	0.2971	0.3625	0.4361	0.5213	0.6177	0.7[illegible]	[illegible]	[illegible]	[illegible]	[illegible]	[illegible]	[illegible]
45.0	0.1191	0.1673	0.2224	0.2826	0.3479	0.4229	0.5062	0.5914	0.6[illegible]	[illegible]	[illegible]	[illegible]	[illegible]	[illegible]	[illegible]
50.0	0.1179	0.1649	0.2182	0.2758	0.3378	0.4085	0.4870	0.5658	0.6[illegible]	[illegible]	[illegible]	[illegible]	[illegible]	[illegible]	[illegible]
55.0	0.1171	0.1632	0.2151	0.2709	0.3306	0.3982	0.4723	0.5422	[illegible]	[illegible]	[illegible]	[illegible]	[illegible]	[illegible]	[illegible]
60.0	0.1165	0.1620	0.2129	0.2675	0.3252	0.3905	[illegible]	0.5345	[illegible]	[illegible]	[illegible]	[illegible]	[illegible]	[illegible]	[illegible]
65.0	0.1160	0.1611	0.2113	0.2646	0.3212	0.3846	0.4[illegible]	[illegible]	[illegible]	[illegible]	[illegible]	[illegible]	[illegible]	[illegible]	[illegible]
70.0	0.1157	0.1604	0.2100	0.2626	0.3182	0.3806	0.4485	0.5166	[illegible]	[illegible]	[illegible]	[illegible]	[illegible]	[illegible]	[illegible]
75.0	0.1155	0.1599	0.2091	0.2612	0.3160	0.3772	0.4410	0.5103	0.5[illegible]	[illegible]	[illegible]	[illegible]	[illegible]	[illegible]	[illegible]
80.0	0.1153	0.1596	0.2085	0.2601	0.3144	0.3749	0.4408	0.5065	[illegible]	[illegible]	[illegible]	[illegible]	[illegible]	[illegible]	[illegible]
85.0	0.1152	0.1593	0.2080	0.2593	0.3132	0.3733	0.4382	0.5033	[illegible]	[illegible]	[illegible]	[illegible]	[illegible]	[illegible]	[illegible]
90.0	0.1151	0.1592	0.2076	0.2589	0.3126	0.3723	0.4367	0.5018	[illegible]	[illegible]	[illegible]	[illegible]	[illegible]	[illegible]	[illegible]

5.00000 0.20000 0.50000

5.0	4.2479	6.7233	9.[illegible]	13.2[illegible]	18.2[illegible]	23.4[illegible]	[illegible]	[illegible]	[illegible]	[illegible]	[illegible]	[illegible]	[illegible]	[illegible]	[illegible]
10.0	0.5990	0.9169	1.3[illegible]	1.8[illegible]	2.3[illegible]	3.1[illegible]	3.[illegible]	[illegible]	[illegible]	[illegible]	[illegible]	[illegible]	[illegible]	[illegible]	[illegible]
15.0	0.3181	0.4690	0.6612	0.8581	1.1[illegible]	1.4[illegible]	1.6[illegible]	2.1[illegible]	[illegible]	[illegible]	[illegible]	[illegible]	[illegible]	[illegible]	[illegible]
20.0	0.2557	0.3591	0.4877	0.6370	0.8010	1.0020	1.2[illegible]	[illegible]	[illegible]	[illegible]	[illegible]	[illegible]	[illegible]	[illegible]	[illegible]
25.0	0.2333	0.3195	0.4321	0.5381	0.6[illegible]	0.8152	0.9892	1.1[illegible]	1.3[illegible]	1.5[illegible]	[illegible]	[illegible]	[illegible]	[illegible]	[illegible]
30.0	0.2235	0.3012	0.3913	0.4911	0.6[illegible]	0.7266	0.8[illegible]	1.0[illegible]	1.1[illegible]	1.3[illegible]	[illegible]	[illegible]	[illegible]	[illegible]	[illegible]
35.0	0.2183	0.2911	0.3747	0.4667	0.5[illegible]	0.6[illegible]	0.7[illegible]	0.7[illegible]	[illegible]	[illegible]	[illegible]	[illegible]	[illegible]	[illegible]	[illegible]
40.0	0.2153	0.2856	0.3647	0.4496	0.5[illegible]	0.6[illegible]	0.7[illegible]	0.8[illegible]	[illegible]	[illegible]	[illegible]	[illegible]	[illegible]	[illegible]	[illegible]
45.0	0.2133	0.2818	0.3582	0.4391	0.5[illegible]	0.6[illegible]	0.7[illegible]	0.8[illegible]	[illegible]	[illegible]	[illegible]	[illegible]	[illegible]	[illegible]	[illegible]
50.0	0.2120	0.2793	0.3538	0.4324	0.5[illegible]	0.6[illegible]	0.7[illegible]	0.8[illegible]	[illegible]	[illegible]	[illegible]	[illegible]	[illegible]	[illegible]	[illegible]
55.0	0.2111	0.2775	0.3507	0.4271	0.5[illegible]	0.5[illegible]	0.6[illegible]	0.7[illegible]	0.8[illegible]	[illegible]	[illegible]	[illegible]	[illegible]	[illegible]	[illegible]
60.0	0.2104	0.2763	0.3481	0.4228	0.5[illegible]	0.5[illegible]	0.6[illegible]	0.7[illegible]	0.8[illegible]	[illegible]	[illegible]	[illegible]	[illegible]	[illegible]	[illegible]
65.0	0.2100	0.2753	0.3467	0.4211	[illegible]	0.5[illegible]	[illegible]	[illegible]	[illegible]	[illegible]	[illegible]	[illegible]	[illegible]	[illegible]	[illegible]
70.0	0.2095	0.2746	0.3455	0.4191	[illegible]	0.5[illegible]	[illegible]	[illegible]	[illegible]	[illegible]	[illegible]	[illegible]	[illegible]	[illegible]	[illegible]
75.0	0.2093	0.2741	0.3446	0.4176	0.5[illegible]	0.5[illegible]	[illegible]	[illegible]	[illegible]	[illegible]	[illegible]	[illegible]	[illegible]	[illegible]	[illegible]
80.0	0.2091	0.2737	0.3438	0.4163	0.4[illegible]	0.5[illegible]	[illegible]	[illegible]	[illegible]	[illegible]	[illegible]	[illegible]	[illegible]	[illegible]	[illegible]
85.0	0.2090	0.2734	0.3431	0.4153	0.4[illegible]	0.5[illegible]	[illegible]	[illegible]	[illegible]	[illegible]	[illegible]	[illegible]	[illegible]	[illegible]	[illegible]
90.0	0.2089	0.2733	0.3431	0.4153	0.4[illegible]	0.5[illegible]	0.5[illegible]	0.6[illegible]	[illegible]	[illegible]	[illegible]	[illegible]	[illegible]	[illegible]	[illegible]

5.00000 0.25000 0.[illegible]

5.0	8.0[illegible]	1.2[illegible]	1.8[illegible]	2.4[illegible]	[illegible]	[illegible]	[illegible]	[illegible]	[illegible]	[illegible]	[illegible]	[illegible]	[illegible]	[illegible]	[illegible]
10.0	1.1[illegible]	1.7[illegible]	[illegible]	3.2[illegible]	[illegible]	[illegible]	[illegible]	[illegible]	[illegible]	[illegible]	[illegible]	[illegible]	[illegible]	[illegible]	[illegible]
15.0	0.6[illegible]	0.9[illegible]	1.[illegible]	[illegible]	[illegible]	[illegible]	[illegible]	[illegible]	[illegible]	[illegible]	[illegible]	[illegible]	[illegible]	[illegible]	[illegible]
20.0	0.5[illegible]	0.7[illegible]	0.9[illegible]	1.2[illegible]	[illegible]	[illegible]	[illegible]	[illegible]	[illegible]	[illegible]	[illegible]	[illegible]	[illegible]	[illegible]	[illegible]
25.0	0.5[illegible]	0.6[illegible]	0.8[illegible]	1.0[illegible]	[illegible]	[illegible]	[illegible]	[illegible]	[illegible]	[illegible]	[illegible]	[illegible]	[illegible]	[illegible]	[illegible]
30.0	0.5[illegible]	0.6[illegible]	0.8[illegible]	1.0[illegible]	[illegible]	[illegible]	[illegible]	[illegible]	[illegible]	[illegible]	[illegible]	[illegible]	[illegible]	[illegible]	[illegible]
35.0	0.5[illegible]	0.6[illegible]	0.7[illegible]	0.9[illegible]	[illegible]	[illegible]	[illegible]	[illegible]	[illegible]	[illegible]	[illegible]	[illegible]	[illegible]	[illegible]	[illegible]
40.0	0.5[illegible]	0.6[illegible]	0.7[illegible]	0.9[illegible]	[illegible]	[illegible]	[illegible]	[illegible]	[illegible]	[illegible]	[illegible]	[illegible]	[illegible]	[illegible]	[illegible]
45.0	0.4[illegible]	0.5[illegible]	0.7[illegible]	0.8[illegible]	[illegible]	[illegible]	[illegible]	[illegible]	[illegible]	[illegible]	[illegible]	[illegible]	[illegible]	[illegible]	[illegible]
50.0	0.4[illegible]	0.5[illegible]	0.7[illegible]	0.8[illegible]	[illegible]	[illegible]	[illegible]	[illegible]	[illegible]	[illegible]	[illegible]	[illegible]	[illegible]	[illegible]	[illegible]
55.0	0.4[illegible]	0.5[illegible]	0.7[illegible]	0.8[illegible]	[illegible]	[illegible]	[illegible]	[illegible]	[illegible]	[illegible]	[illegible]	[illegible]	[illegible]	[illegible]	[illegible]
60.0	0.4[illegible]	0.5[illegible]	0.7[illegible]	0.8[illegible]	[illegible]	[illegible]	[illegible]	[illegible]	[illegible]	[illegible]	[illegible]	[illegible]	[illegible]	[illegible]	[illegible]
65.0	0.4[illegible]	0.5[illegible]	0.7[illegible]	0.8[illegible]	[illegible]	[illegible]	[illegible]	[illegible]	[illegible]	[illegible]	[illegible]	[illegible]	[illegible]	[illegible]	[illegible]
70.0	0.4[illegible]	0.5[illegible]	0.7[illegible]	0.8[illegible]	[illegible]	[illegible]	[illegible]	[illegible]	[illegible]	[illegible]	[illegible]	[illegible]	[illegible]	[illegible]	[illegible]
75.0	0.4[illegible]	0.5[illegible]	0.7[illegible]	0.8[illegible]	[illegible]	[illegible]	[illegible]	[illegible]	[illegible]	[illegible]	[illegible]	[illegible]	[illegible]	[illegible]	[illegible]
80.0	0.4[illegible]	0.5[illegible]	0.7[illegible]	0.8[illegible]	[illegible]	[illegible]	[illegible]	[illegible]	[illegible]	[illegible]	[illegible]	[illegible]	[illegible]	[illegible]	[illegible]
85.0	0.4[illegible]	0.5[illegible]	0.7[illegible]	0.8[illegible]	[illegible]	[illegible]	[illegible]	[illegible]	[illegible]	[illegible]	[illegible]	[illegible]	[illegible]	[illegible]	[illegible]
90.0	0.4913	0.6187	0.7[illegible]	0.8[illegible]	[illegible]	[illegible]	[illegible]	[illegible]	[illegible]	[illegible]	[illegible]	[illegible]	[illegible]	[illegible]	[illegible]

TABLE V-3

MTF FORMULAS

Pixel Misregistration	$e^{-2\pi^2 \left[\frac{f\sqrt{(1/2)^2 + (1/10)^2}}{2} \right]^2}$	f = fraction of Nyquist
CCD Geometric	$\frac{\sin^2\left(\frac{\pi f}{2}\right)}{\left(\frac{\pi f}{2}\right)^2}$	f = fraction of Nyquist
Image Smear	$\frac{\sin \frac{\pi S}{2} f}{\frac{\pi S}{2} f}$	

where:

f	fraction of Nyquist
S	$\frac{V(t_i)\,fl}{(P)\,R}$
V	velocity
t_i	integration time
fl	focal length
P	pixel dimension
R	range

TABLE V-4

MTF FUNCTIONS

MTF Frequency Fraction of Nyquist 17 μm Pixel	Lens 18-inch fl, f/4.0	Pixel Misregistration VTR & Zoom	CCD Geometric	System - Except for Image Smear
.1	.940	.987	.992	.921
.2	.880	.950	.968	.809
.3	.790	.891	.928	.653
.4	.720	.814	.875	.513
.5	.670	.726	.811	.394
.6	.620	.630	.737	.288
.7	.565	.533	.657	.198
.8	.515	.440	.573	.130
.9	.460	.354	.488	.079
1.0	.390	.277	.405	.044

TABLE V-5

SYSTEM MTF WITH IMAGE SMEAR* VS RANGE

F	1000	2000	3000	4000	5000	6000	7000	8000	9000	10000	11000	12000
0.10	0.7019	0.6631	0.6347	0.7017	0.7142	0.7411	0.7151	0.7207	[illegible]	[illegible]	[illegible]	[illegible]
0.15	0.2607	0.6191	0.7319	0.7755	[illegible]	0.7104	0.7722	0.7754	[illegible]	[illegible]	[illegible]	[illegible]
0.20	0.0527	0.5132	0.5021	0.5612	0.6722	[illegible]	[illegible]	0.6821	0.7604	[illegible]	[illegible]	[illegible]
0.25	0.1013	0.1227	0.3117	[illegible]	[illegible]	[illegible]	0.4743	[illegible]	[illegible]	[illegible]	[illegible]	[illegible]
[illegible]	0.0081	0.0054	[illegible]	[illegible]	[illegible]	[illegible]	[illegible]	0.4084	[illegible]	[illegible]	[illegible]	[illegible]
[illegible]	[illegible]	[illegible]	0.2751	[illegible]	[illegible]	[illegible]	[illegible]	[illegible]	[illegible]	[illegible]	[illegible]	[illegible]
0.40	0.0122	-0.0137	0.0184	[illegible]	0.1121	[illegible]	0.1014	[illegible]	[illegible]	[illegible]	[illegible]	[illegible]
0.50	0.0051	-0.0377	-0.0054	[illegible]	[illegible]	[illegible]	0.3916	[illegible]	[illegible]	[illegible]	[illegible]	[illegible]
0.60	0.0071	-0.0057	-0.0117	0.0121	[illegible]	[illegible]	[illegible]	[illegible]	[illegible]	[illegible]	[illegible]	[illegible]
1.00	[illegible]	[illegible]	[illegible]	[illegible]	[illegible]	[illegible]	[illegible]	[illegible]	[illegible]	[illegible]	[illegible]	[illegible]

* Velocity = 300 kn

F = fraction of Nyquist

R = range in feet

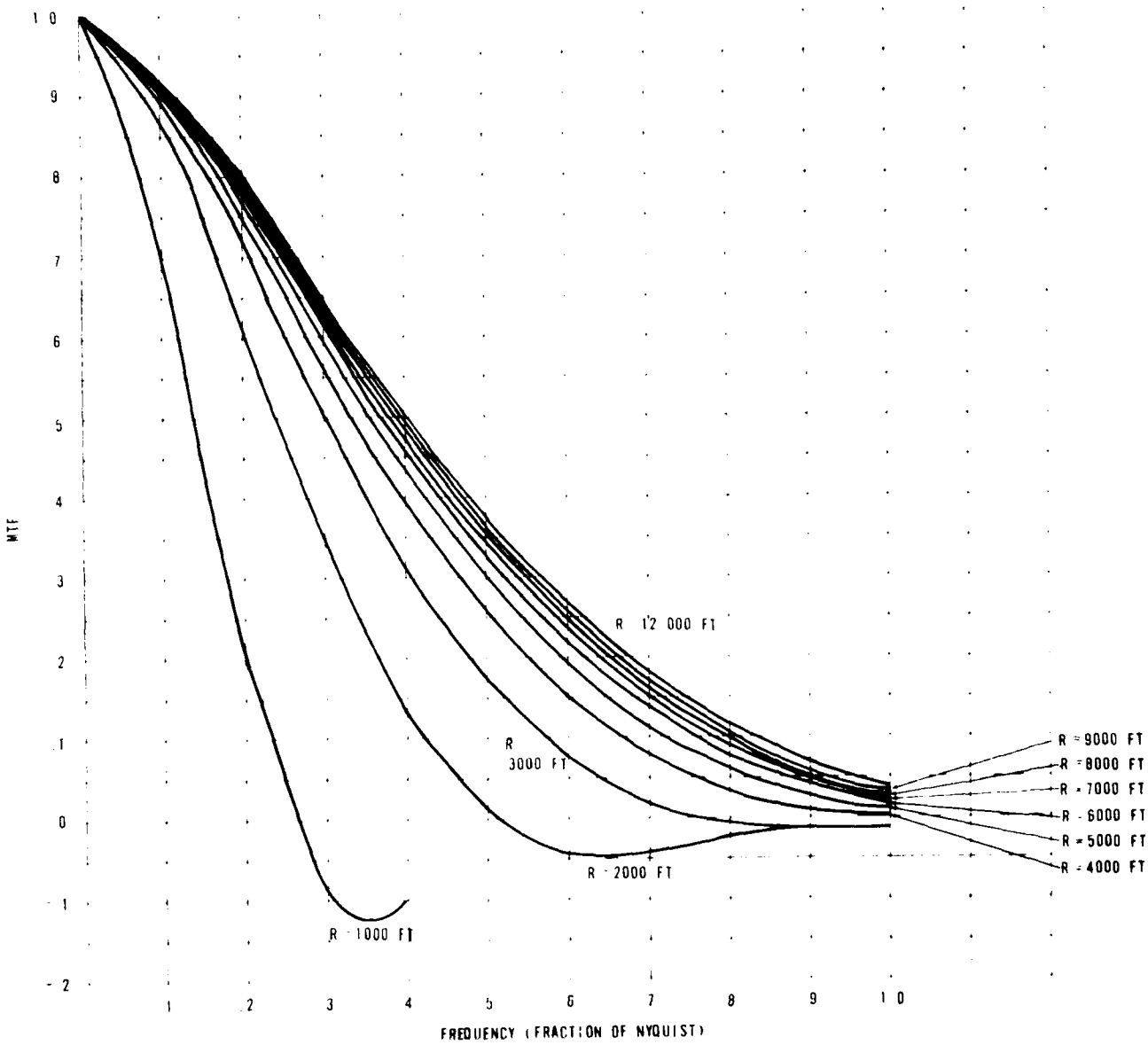

FIGURE 5.1 SYSTEM MTF WITH IMAGE SMEAR

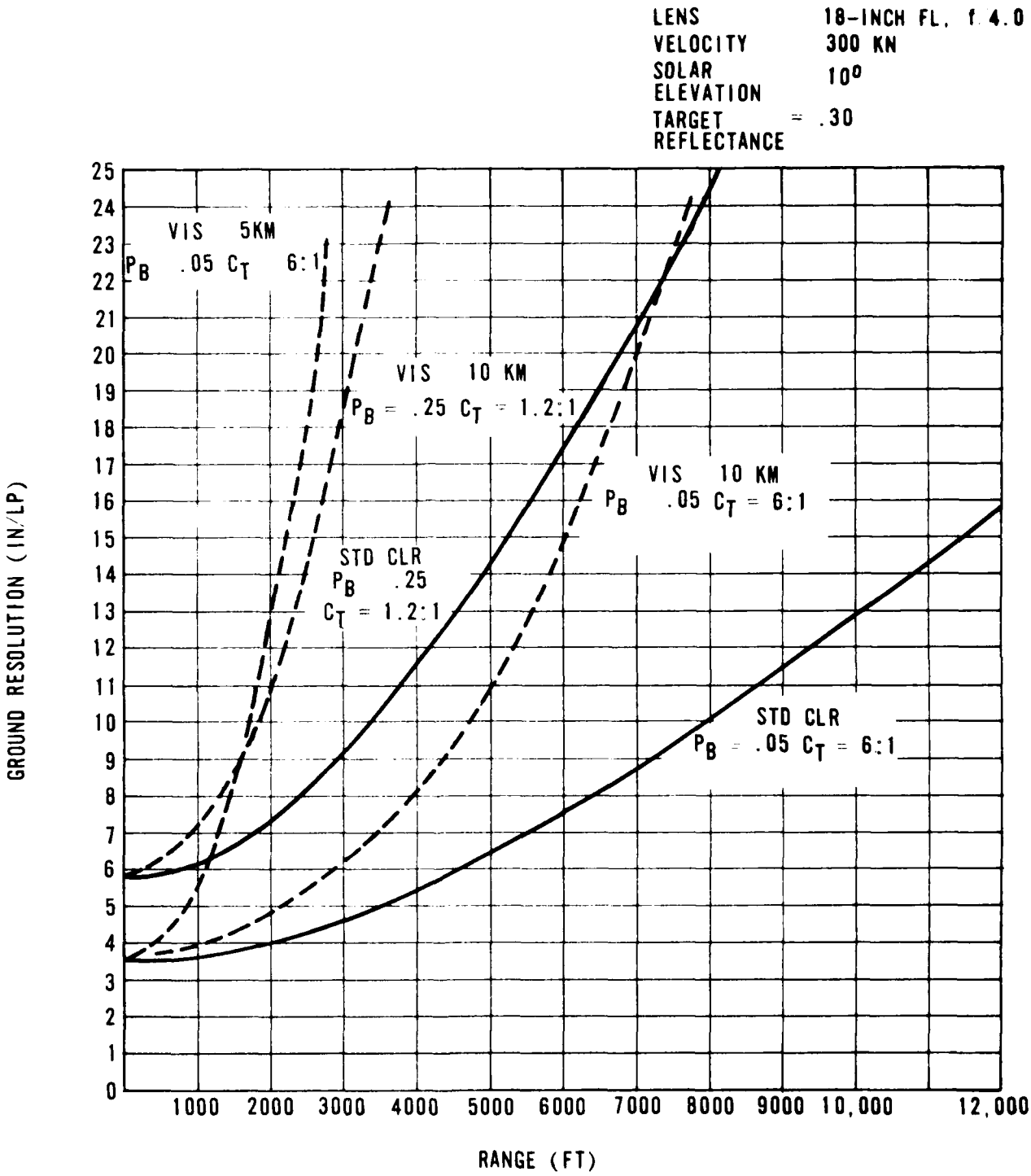

FIGURE 5 2 SYSTEM RESOLUTION; 10° SOLAR ELEVATION

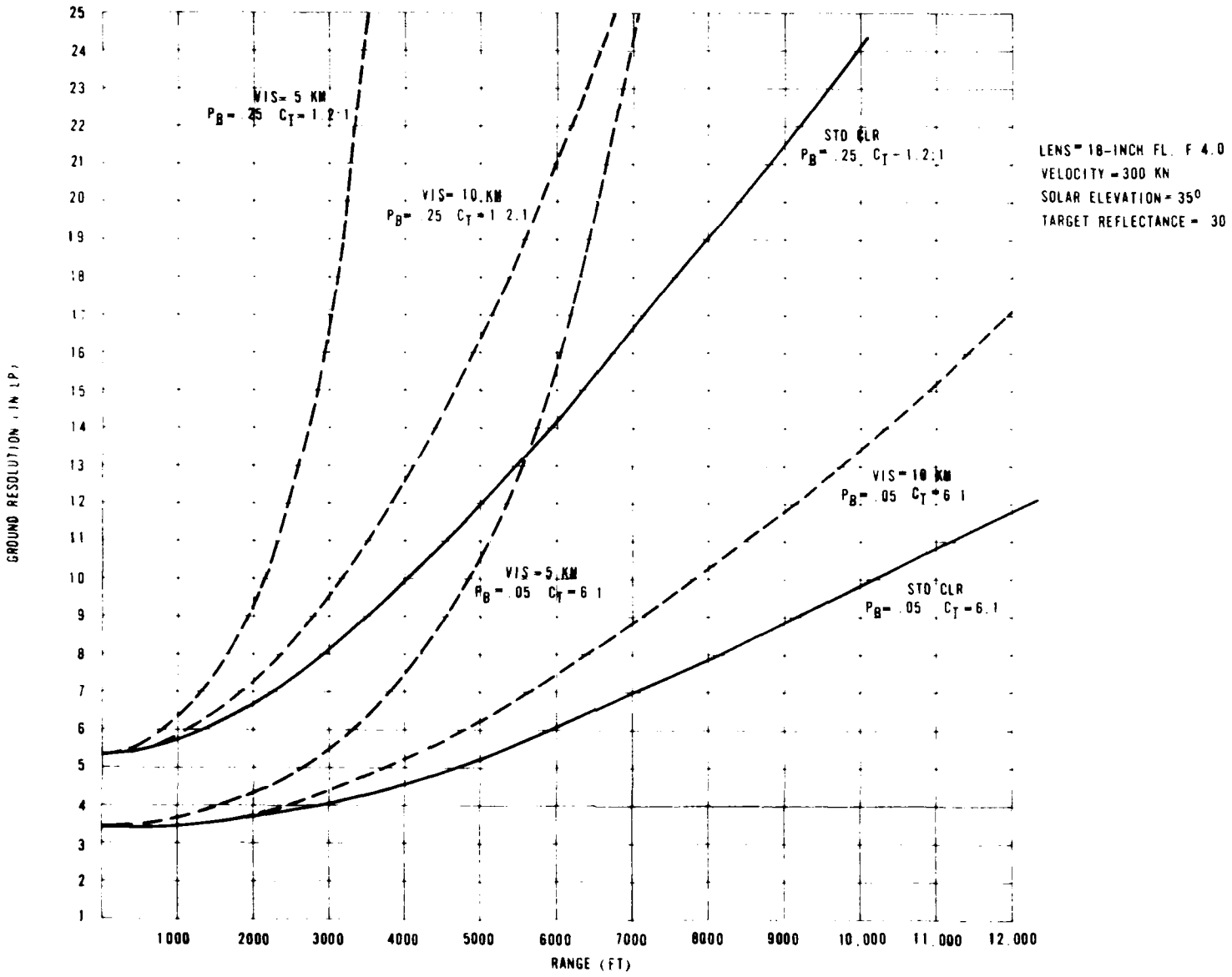

FIGURE 5.3 SYSTEM RESOLUTION; 35° SOLAR ELEVATION

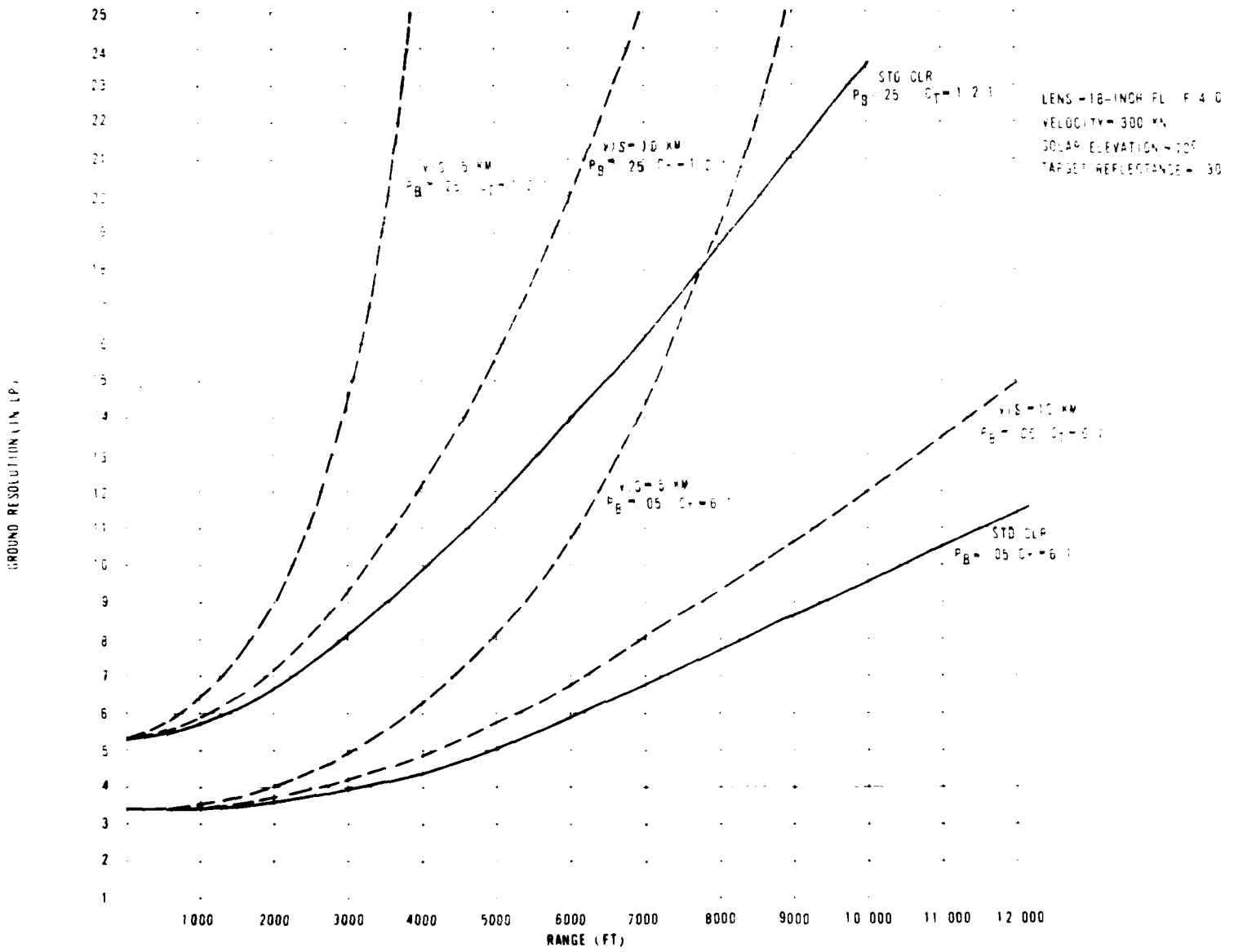

FIGURE 5.4 SYSTEM RESOLUTION; 70° SOLAR ELEVATION

APPENDIX A
FOCAL PLANE ARRAY TEST PROGRAM

GFE FOCAL PLANE ARRAY DATA

The objective of this test was to evaluate and characterize the three CCD's used in the GFE focal plane array. A bench test setup as illustrated in figure A.1 was used to provide an illumination source for the array. The DSNU and PRNU evaluations were carried out at a reset clock (ϕR) rate of .5 MHz. This rate was selected so that the PRNU test condition of 350-mV CCD output could be met with the available light source. All the photographs were taken from a Tektronix 7603 oscilloscope which was ac coupled to the buffered 0S signal of the CCD to observe the video output. The CCD was connected to the bias PCB, figure A.2, and was clocked using the drive circuitry as shown in figure A.3. A block diagram of the CCD test tool is given in figure A.4.

The pixel distribution data was taken by connecting the CCD preamplifier, figure A.5, to the CAI CCD evaluation tool. For this test, only 1724 pixels were evaluated as the performance of the two pixels at each end of the CCD is not guaranteed.

During the preceding tests, it was noticed that a significant sensitivity variation existed between the center CCD and the end CCD's. In an effort to determine whether this was due to CCD sensitivity or mismatch of the prism optical channels, some additional tests were run to characterize the relative gain of the three CCD's. These tests consisted of a sensitivity test using a monochrometer to provide a narrow band light source, and a test using a polarizing filter and a 600-nm narrow band light source. The data from this test is given in table A-1. The narrow band tests were run at a ϕR rate of 100 kHz to compensate for the light loss of the filters.

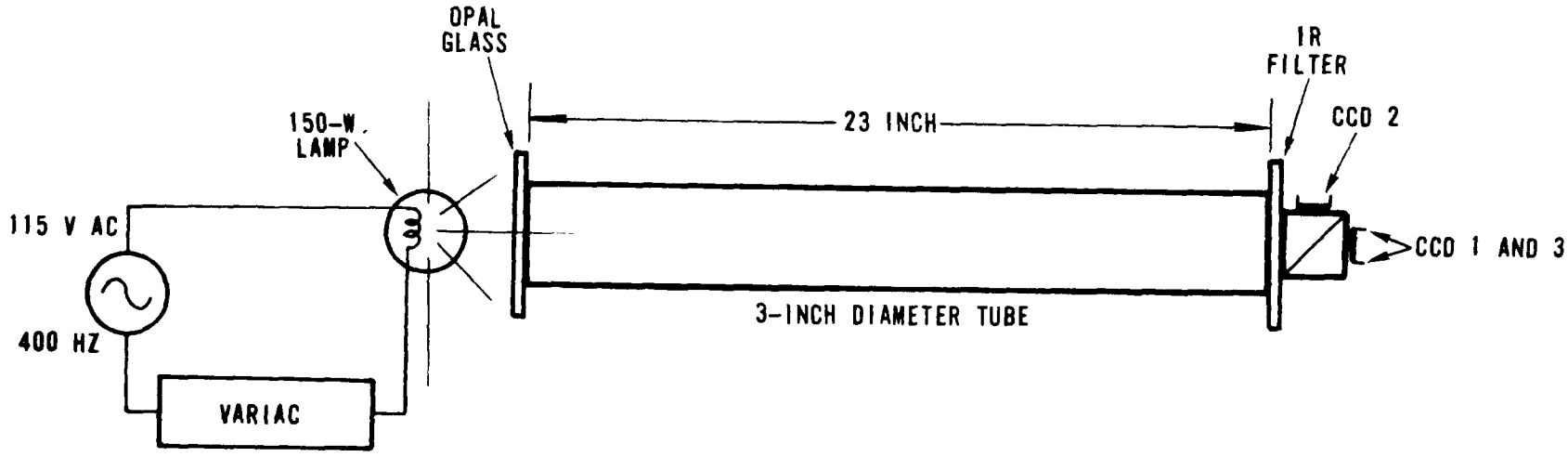

FIGURE A.1 CCD TEST FIXTURE

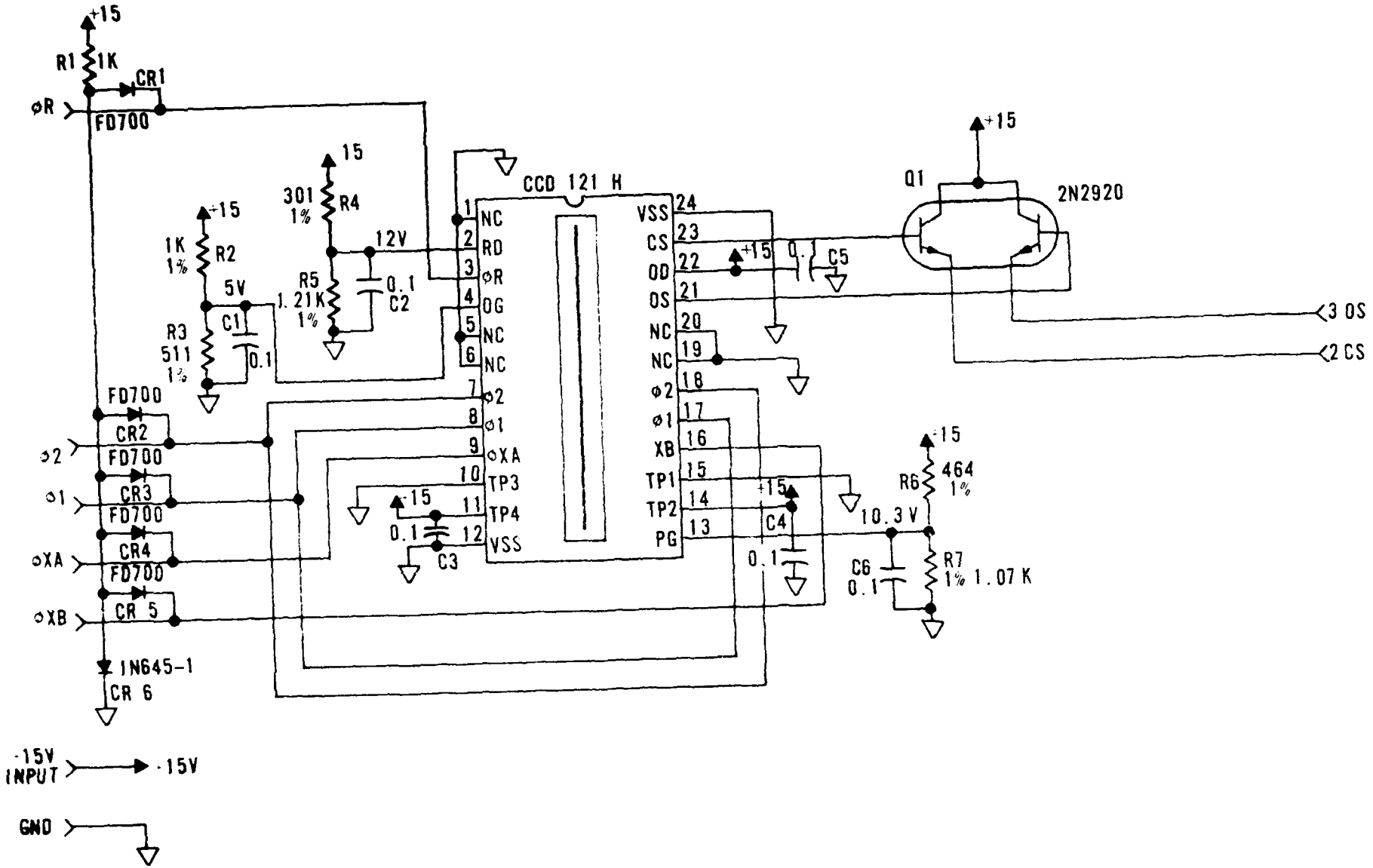

FIGURE A.2 CCD BIAS BOARD

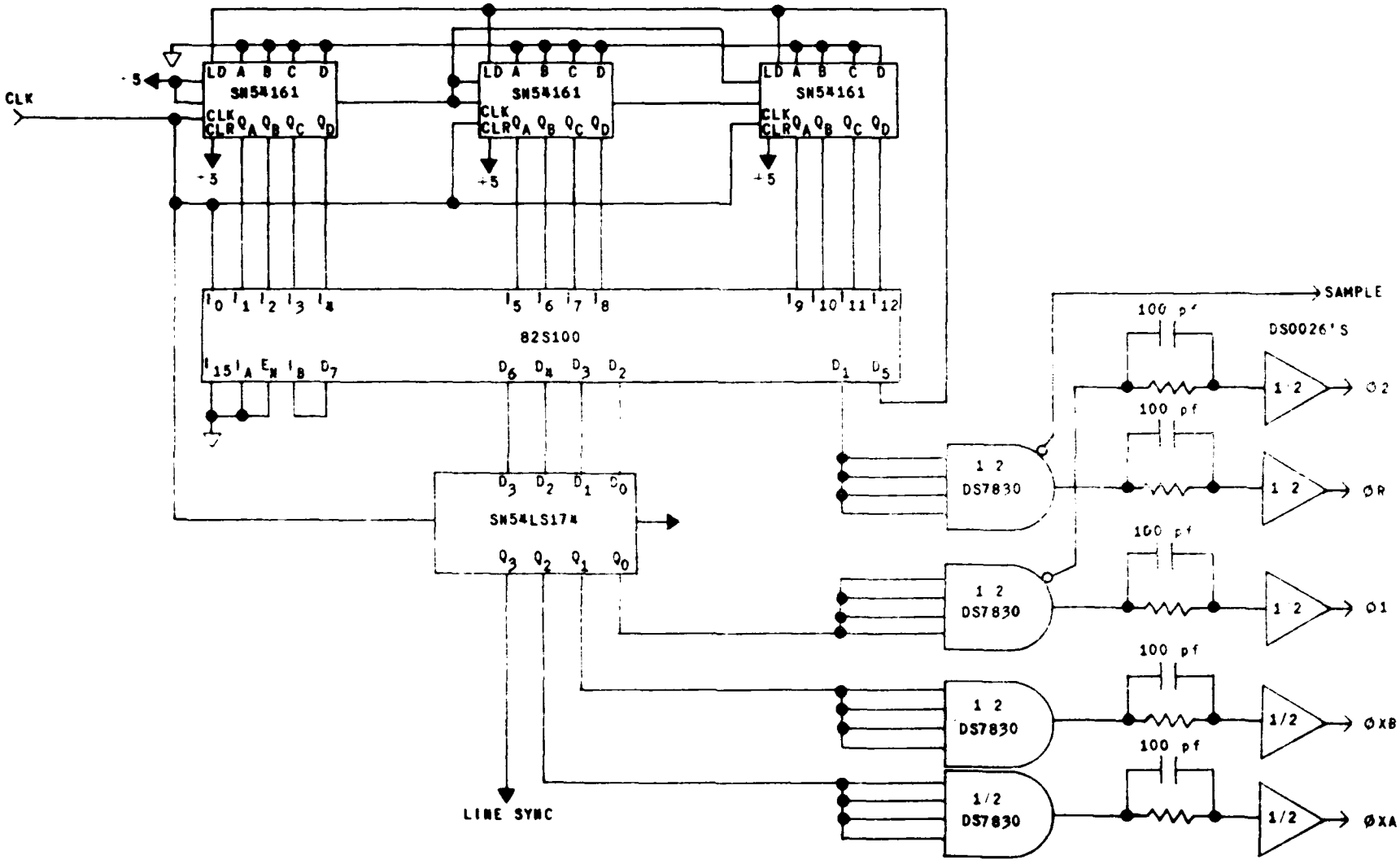

FIGURE A.3 CCD CLOCK

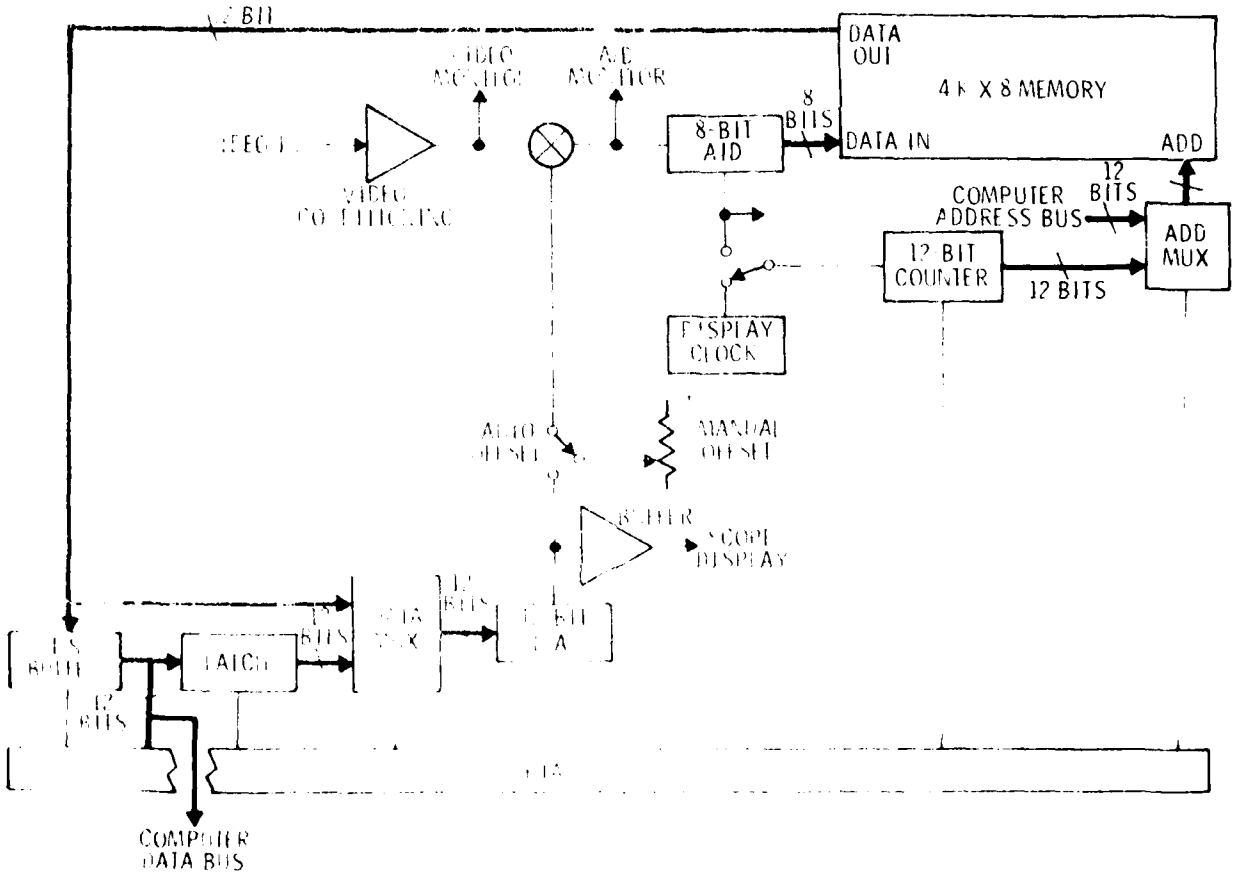

FIGURE A 4 CCD TEST TOOL

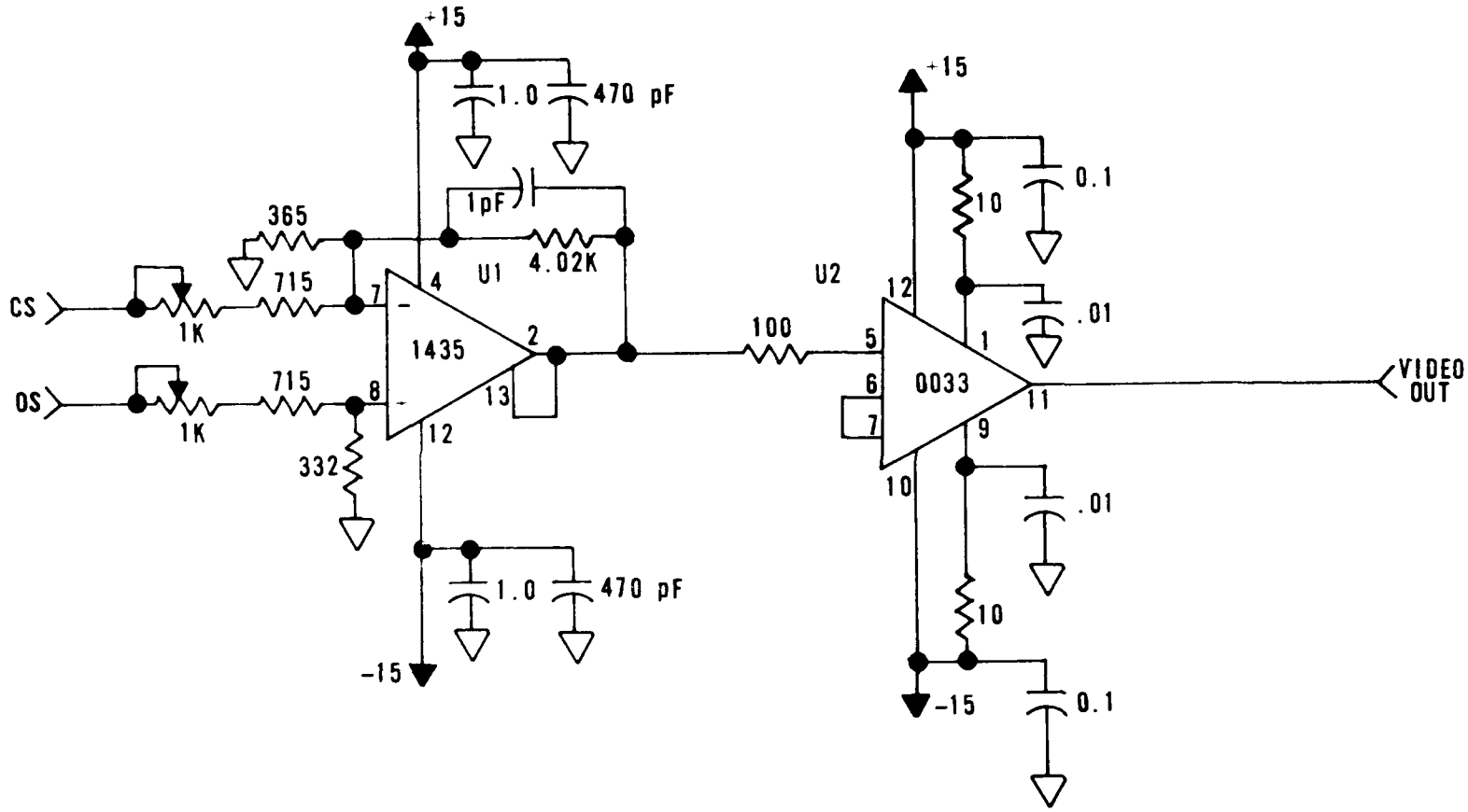

FIGURE A.5 CCD 121H VIDEO PREAMP

TABLE A-1

RELATIVE GAIN TEST DATA

Light Source	Relative Sensitivity CCD 1	CCD 2	CCD 3
Tungsten (wide)	.35	1	.35
500 nm (narrow)	.61	1	.71
600 nm (narrow)	.40	1	.60
700 nm (narrow)	.36	1	.45
600 nm polarized	N/A	.38	1
600 nm polarized @ 90°	N/A	1	.83

Fig	Vert	View	Remarks
1 - 1	100 mV/div	DSNU 1 line 1728 elements	At this sensitivity, no variations in dark signal are apparent.
1 - 2	10 mV/div	DSNU 1 line 1728 elements	By expanding the veritcal scale some nonuniformity can be seen. This nonuniformity ($\approx$2 mV) is well within the specification for this device.
1 - 3	10 mV/div	DSNU Expanded view to show the pixels at the beginning and end of the image sensor	Some of the minor variations in dark signal can be seen.
1 - 4	10 mV/div	DSNU Expanded view showing misc. DSNU	Some of the minor variations in dark signal can be seen.

K+E 10 X 10 TO THE INCH 46 0703
KEUFFEL & ESSER CO.

CCD #1

PRNU PIXEL DISTRIBUTION

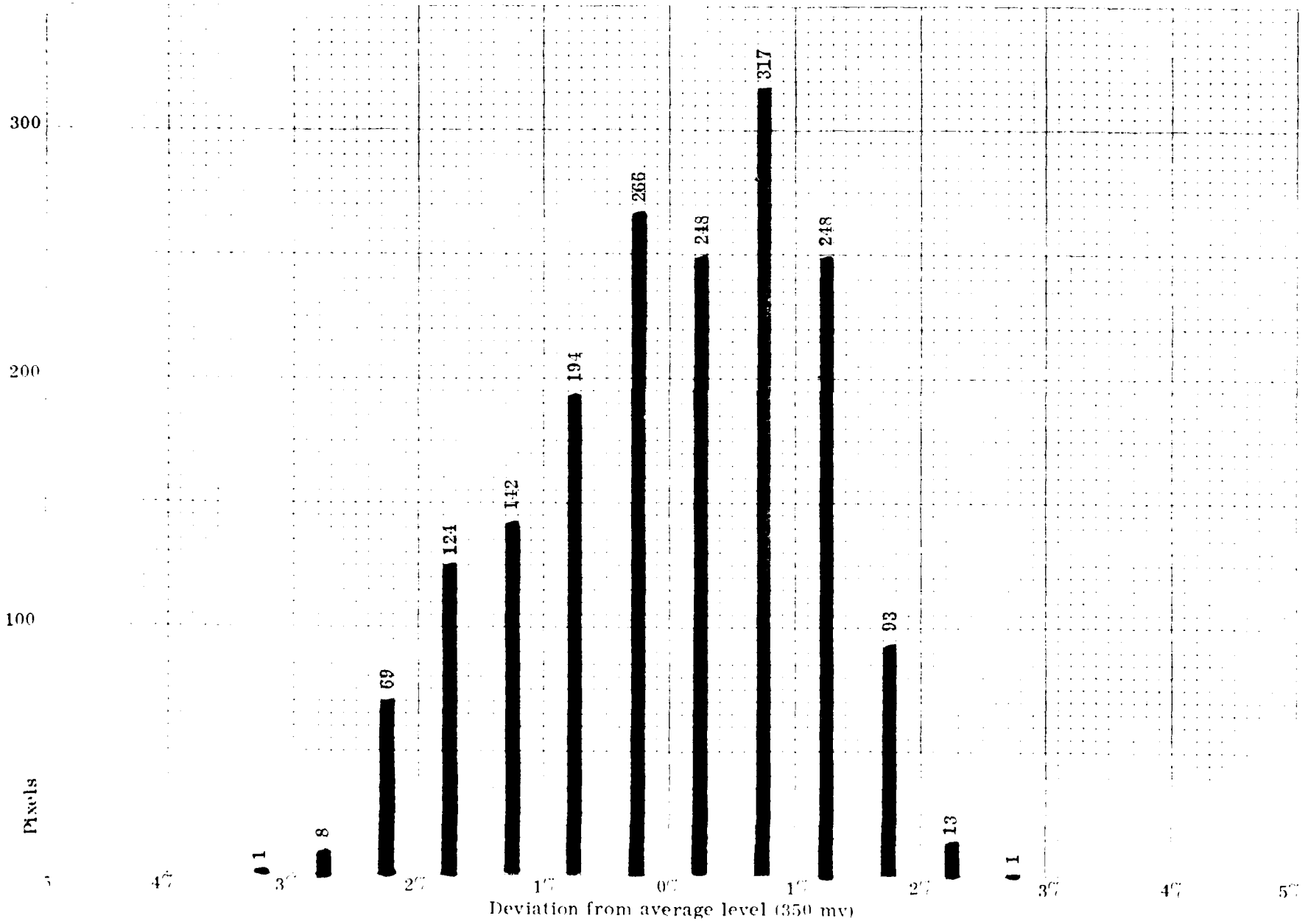

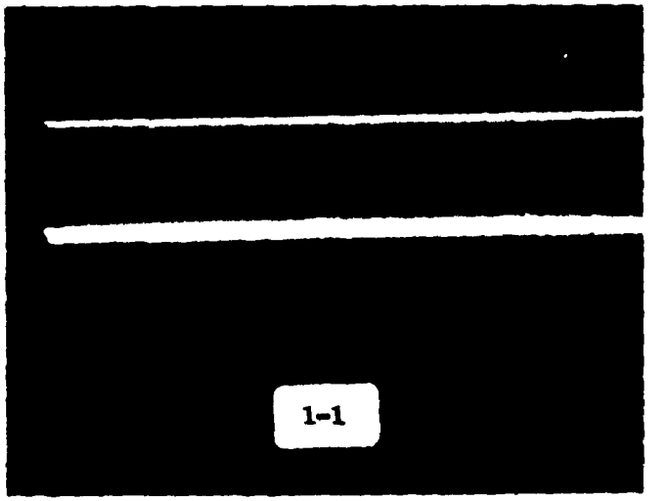
1-1

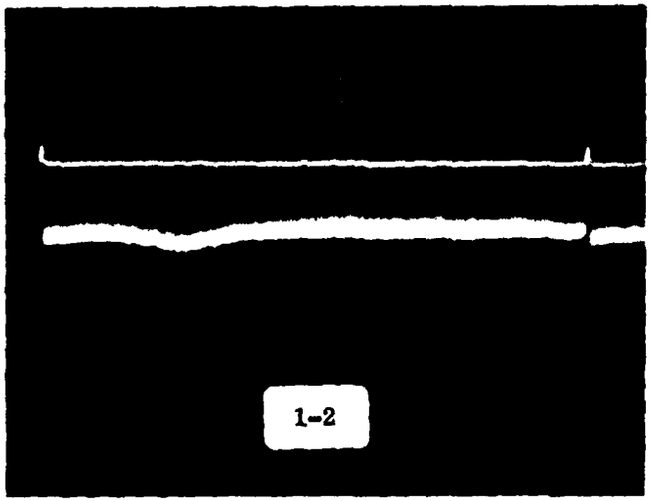
1-2

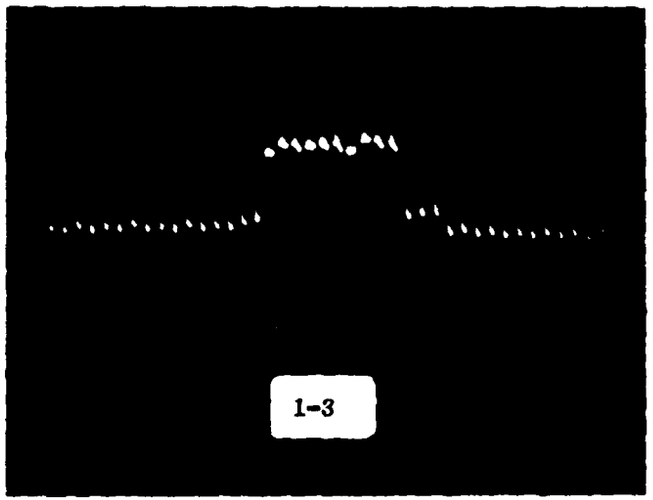
1-3

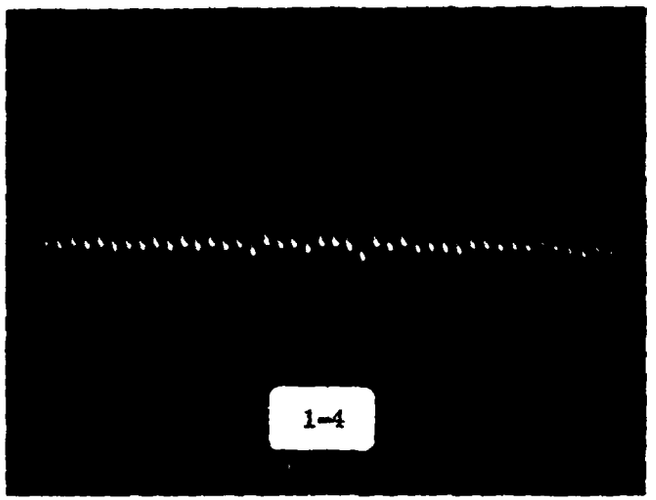
1-4

Fig	Vert	View	Remarks
1 - 5	10 mV/div	DSNU Expanded view showing misc. DSNU	Some of the minor variations in dark signal can be seen.
1 - 6	100 mV/div	PRNU 1 line 1728 elements	Some variation in photo response can be seen.
1 - 7	20 mV/div	PRNU 1 line 1728 elements	By expanding the vertical scale, it is possible to see the peak-to-peak variations in photo response over the entire device. This is within the specification limits of the device.
1 - 8	100 mV/div	PRNU Expanded view showing the pixels at the beginning and end of the sensor	PRNU variations can be seen along with the blank pixels for use in bulk charge correction.

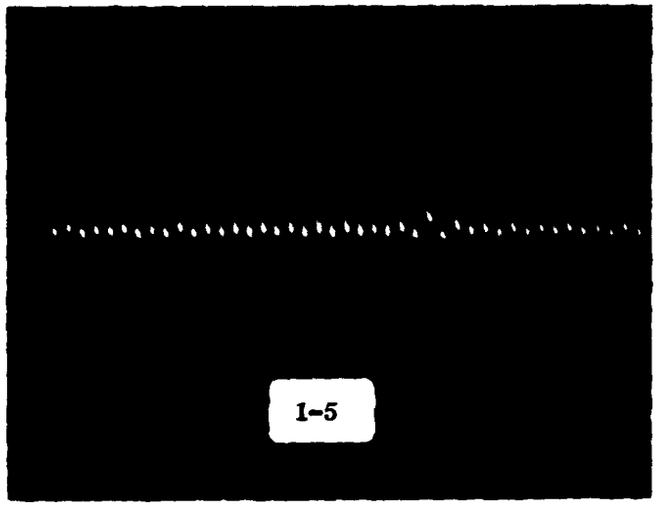
1-5

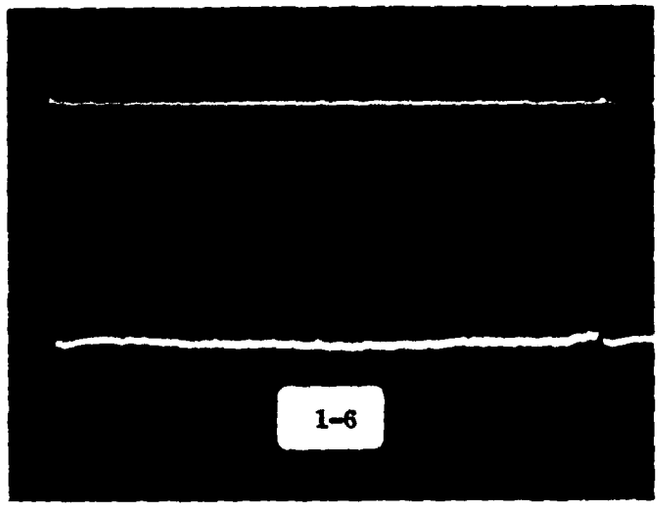
1-6

1-7

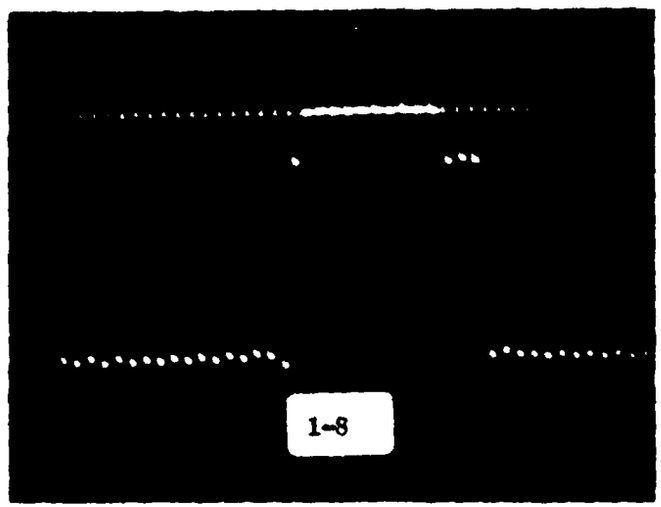
1-8

Fig	Vert	View	Remarks
1 - 9	20 mV/div	PRNU Expanded view showing the pixels at the beginning and end of the sensor	The last active pixel of the line represents one of the largest variations in response.
1 - 10	20 mV/div	PRNU Expanded view of misc. pixels	One of the larger variations in response can be seen.

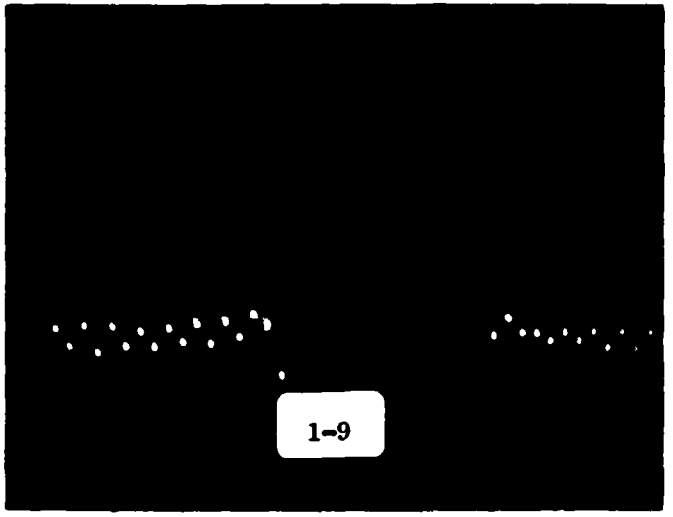
1-9

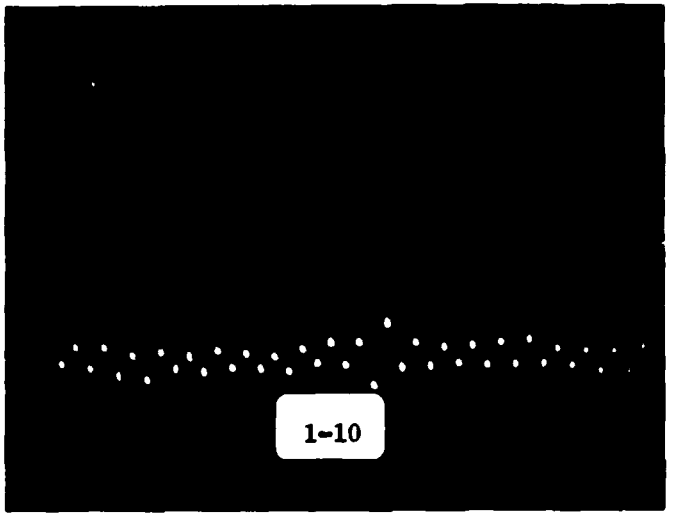
1-10

Fig	Vert	View	Remarks
2 - 1	100 mV/div	DSNU 1 line 1728 pixels	At this sensitivity, very little variation can be seen.
2 - 2	10 mV/div	DSNU 1 line 1728 pixels	By expanding the vertical scale, some nonuniformity can be seen. Three pixels stand out with large variations but still within the limits of the specification sheet.
2 - 3	10 mV/div	DSNU Expanded view around the sync time	Little variation can be seen.
2 - 4	10 mV/div	DSNU Expanded view	The three pixels with the high dark current can be seen.

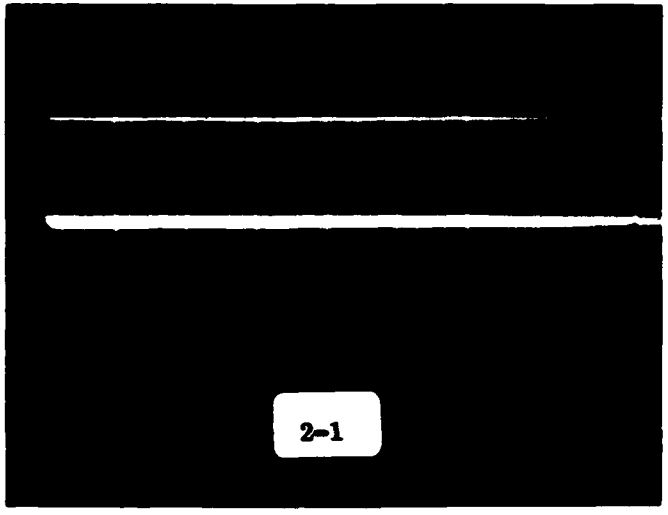
2-1

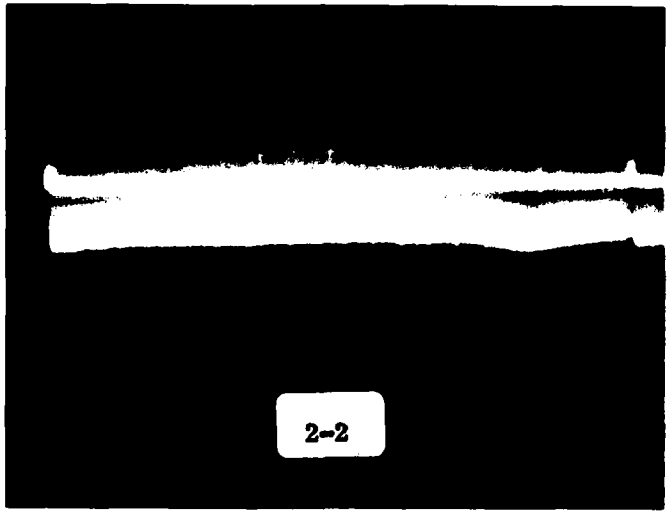
2-2

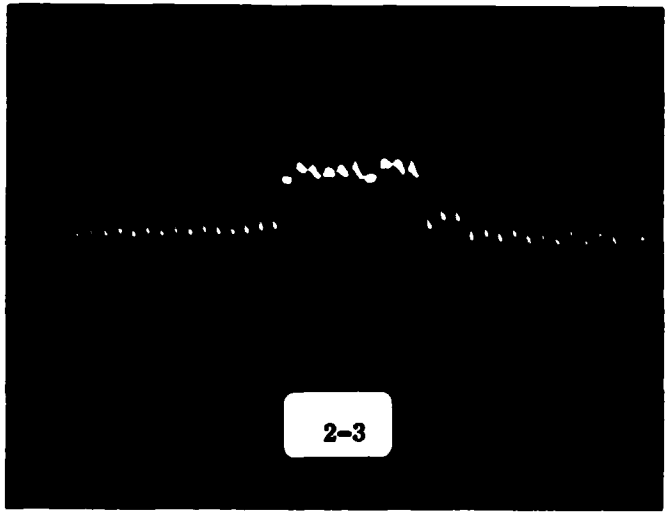
2-3

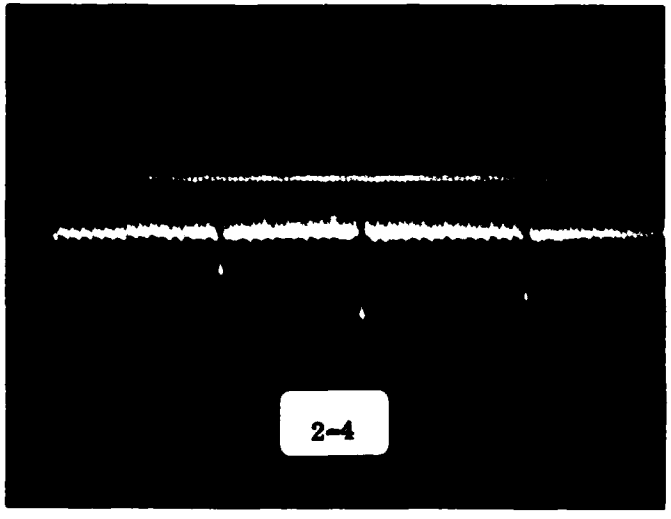
2-4

Fig	Vert	View	Remarks
2 - 5	10 mV/div	DSNU Expanded view	Two of the three pixels in photo 2 - 4 are further expanded.
2 - 6	100 mV/div	PRNU 1 line 1728 elements	Some of the photo response variation can be seen.
2 - 7	20 mV/div	PRNU 1 line 1728 elements	With the scope sensitivity increased, it is possible to see that the response variations are nearing the typical specification for the device.
2 - 8	100 mV/div	PRNU Expanded view around the sync time	Response variations and the blank pixels can be seen.

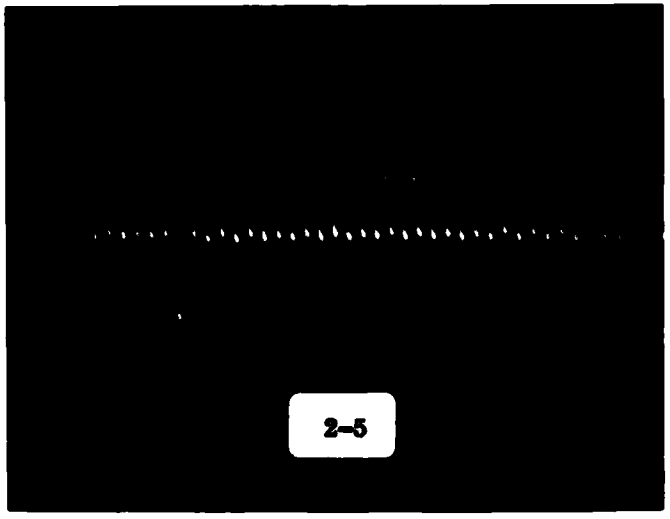
2-5

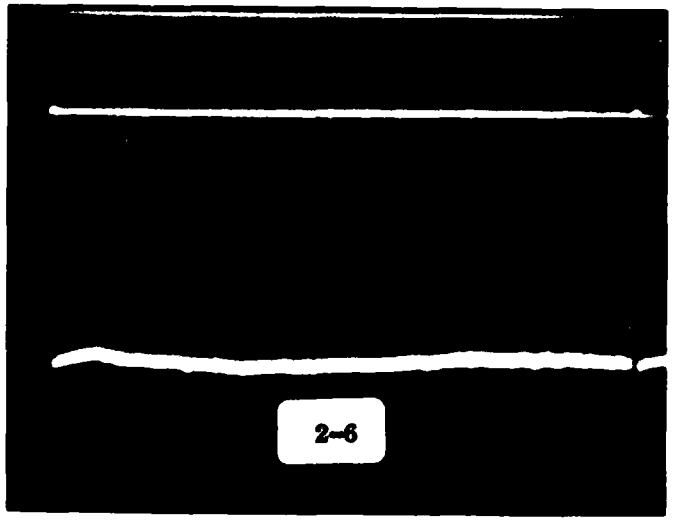
2-6

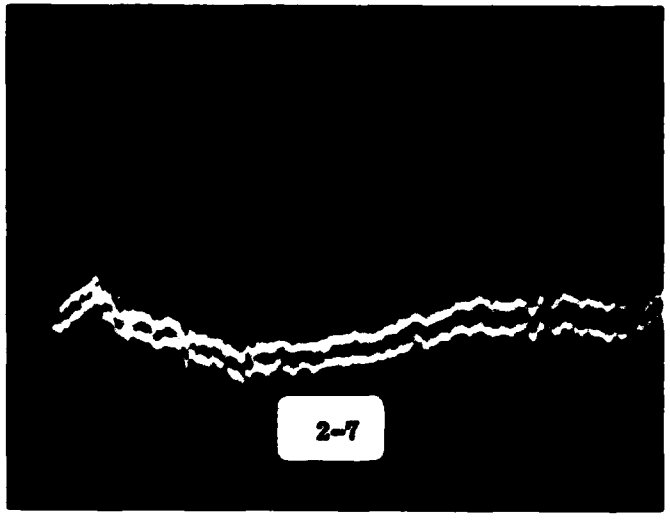
2-7

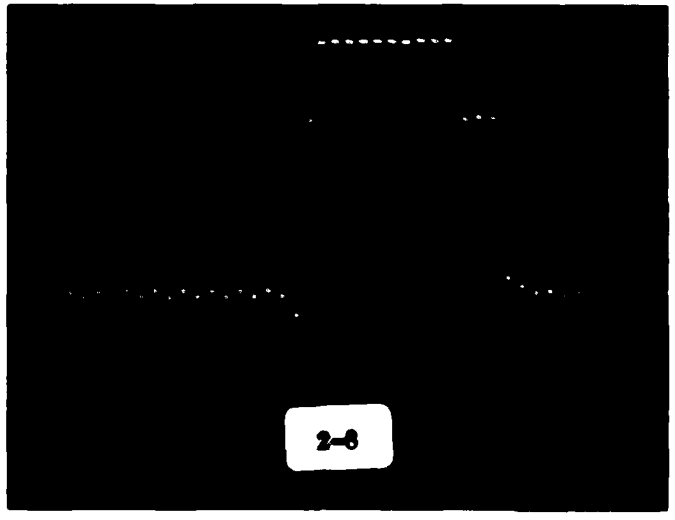
2-8

Fig	Vert	View	Remarks
2 - 9	20 mV/div	PRNU Expanded view around the sync time	The largest variations of individual pixels occur at this location.
2 - 10	20 mV/div	PRNU Expanded view	The variation in misc. pixels can be seen.
2 - 11	20 mV/div	PRNU Expanded view	More misc. pixels.
2 - 12	20 mV/div	PRNU Expanded view	More misc. pixels.

CCD # 2

PRNU PIXEL DISTRIBUTION

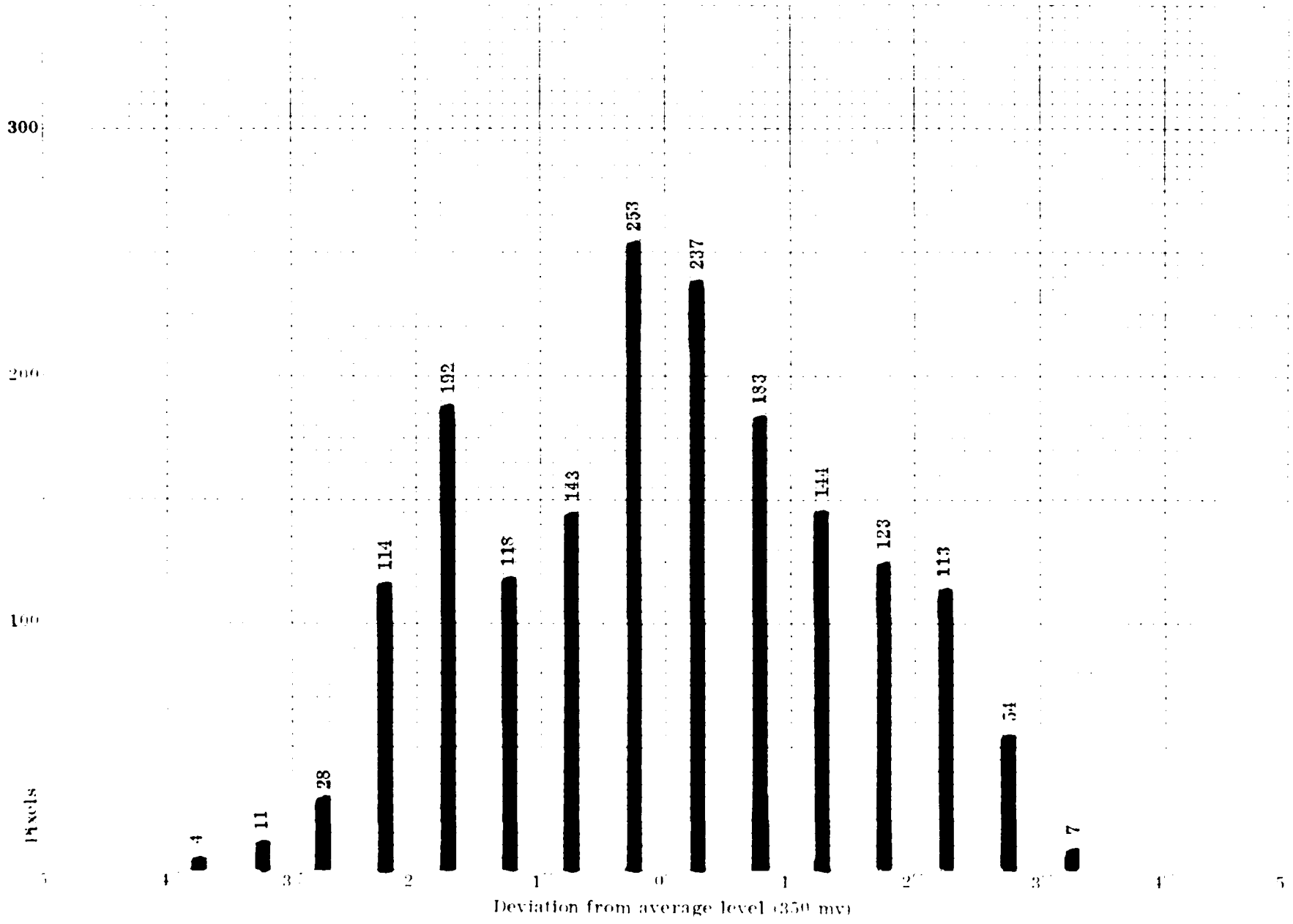

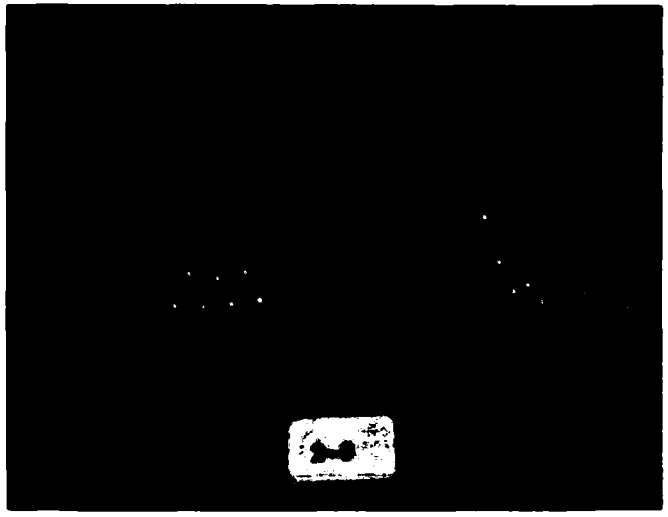
2-9

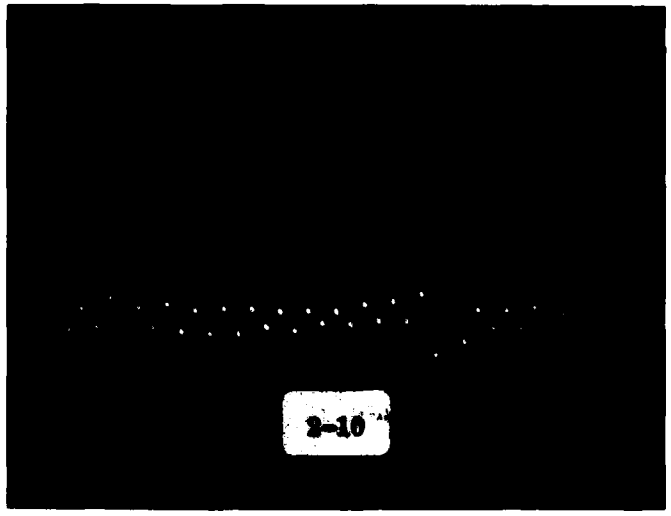
2-10

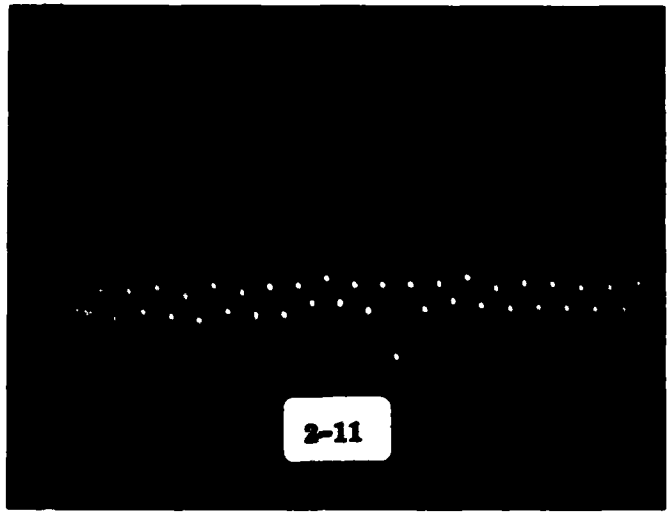
2-11

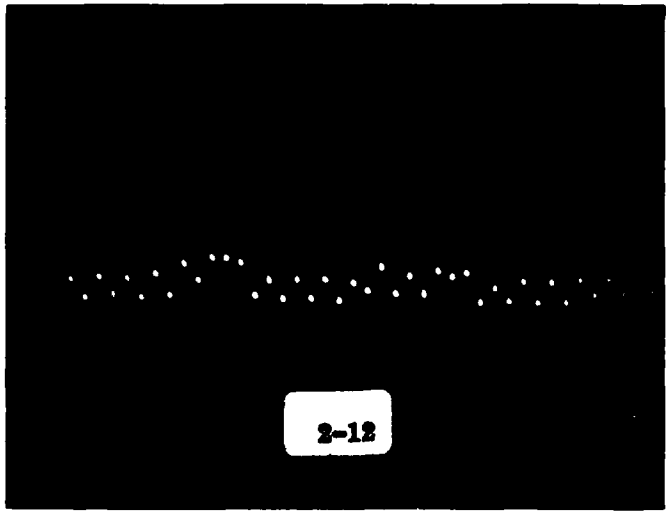
2-12

Fig	Vert	View	Remarks
3 - 1	100 mV/div	DSNU 1 line 1728 elements	No variations in dark signal can be seen.
3 - 2	10 mV/div	DSNU 1 line 1728 elements	Even with increased sensitivity, little variation can be seen.
3 - 3	10 mV/div	DSNU Expanded view around the sync time	The largest variations occur at the first three pixels of the sensor.
3 - 4	10 mV/div	DSNU Expanded view around the sync time	A further expansion of photo 3 - 3.

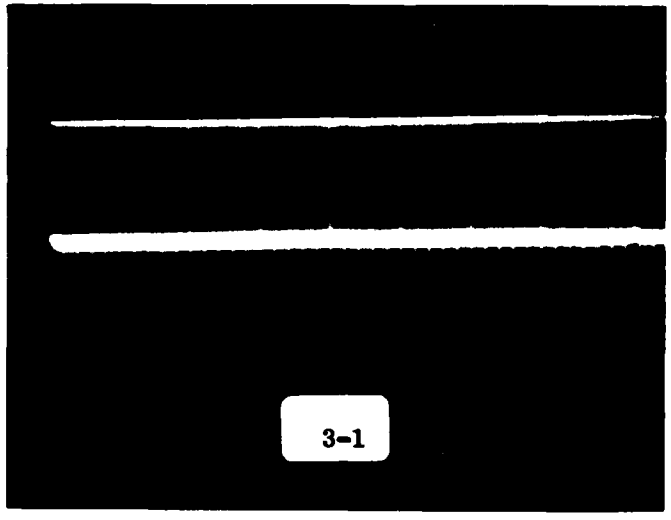
3-1

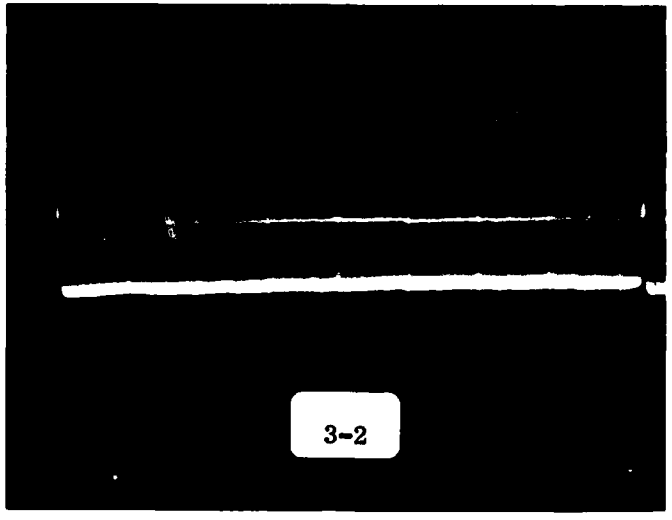
3-2

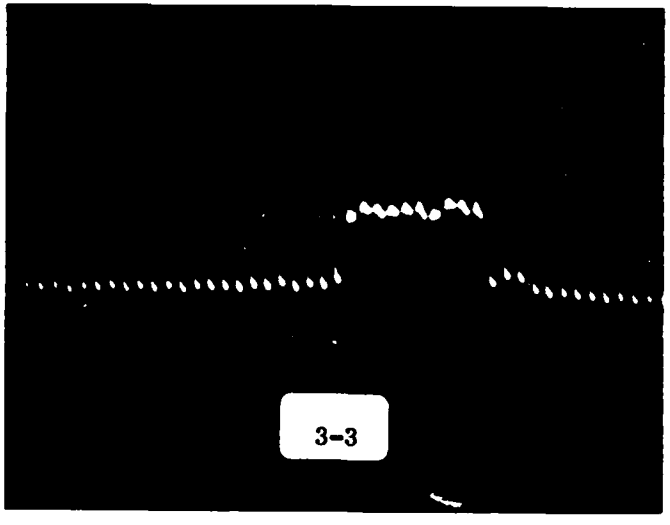
3-3

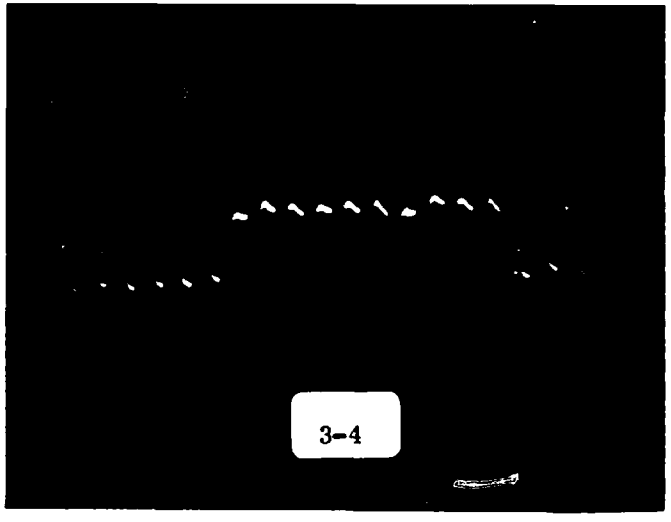
3-4

Fig	Vert	View	Remarks
3 - 5	10 mV/div	DSNU Expanded view	Misc. pixels are shown.
3 - 6	100 mV/div	PRNU 1 line 1728 elements	Very little photo response variations can be seen.
3 - 7	20 mV/div	PRNU 1 line 1728 elements	Some nonuniformity can now be seen. It is within the specifications of the device.
3 - 8	100 mV/div	PRNU Expanded view	Some response variation can be seen near the ends.

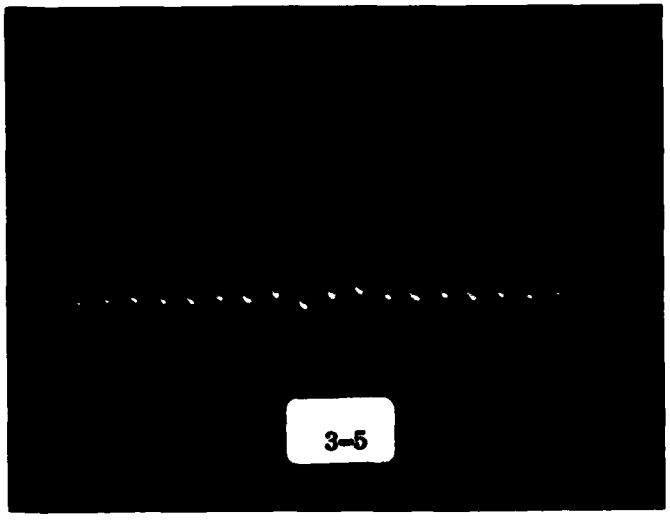

3-5

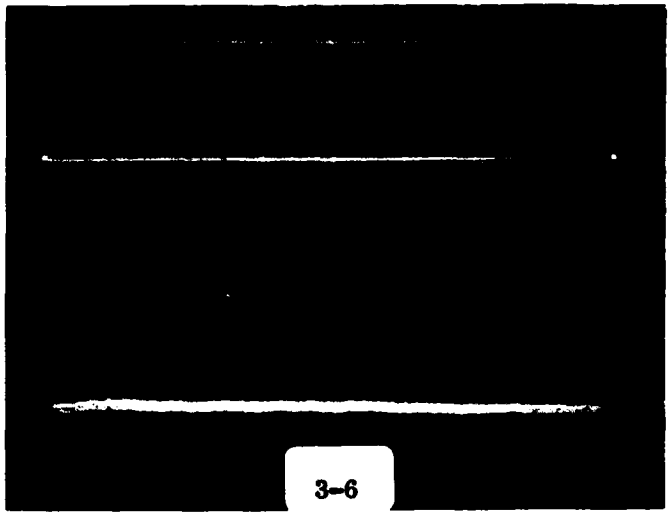

3-6

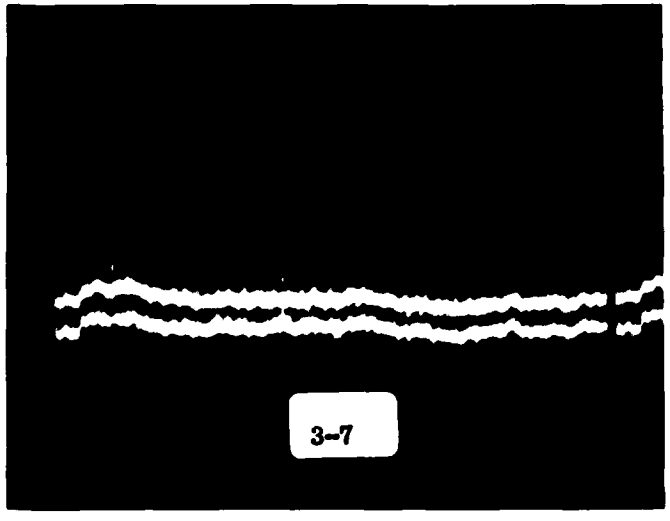

3-7

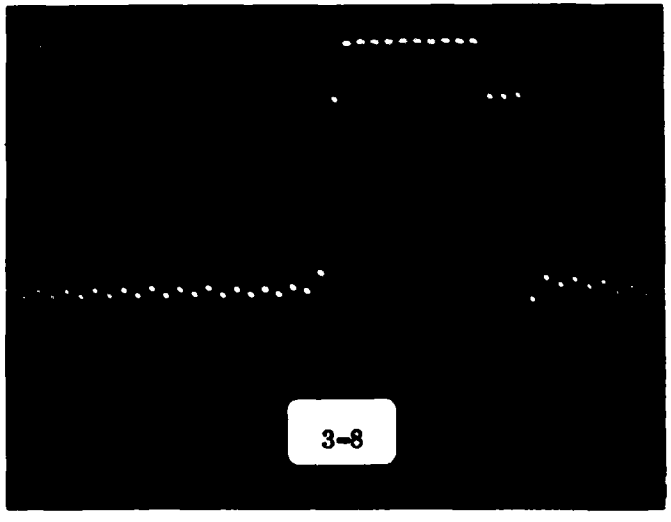

3-8

Fig	Vert	View	Remarks
		PRNU	
3 - 9	20 mV/div	Expanded view showing pixels at sync time	The largest variations in response occur at this location.
3 - 10	20 mV/div	Expanded view of misc. pixels	One of the larger areas of nonuniform response is shown.

K+E 10 X 10 TO THE INCH 46 0703

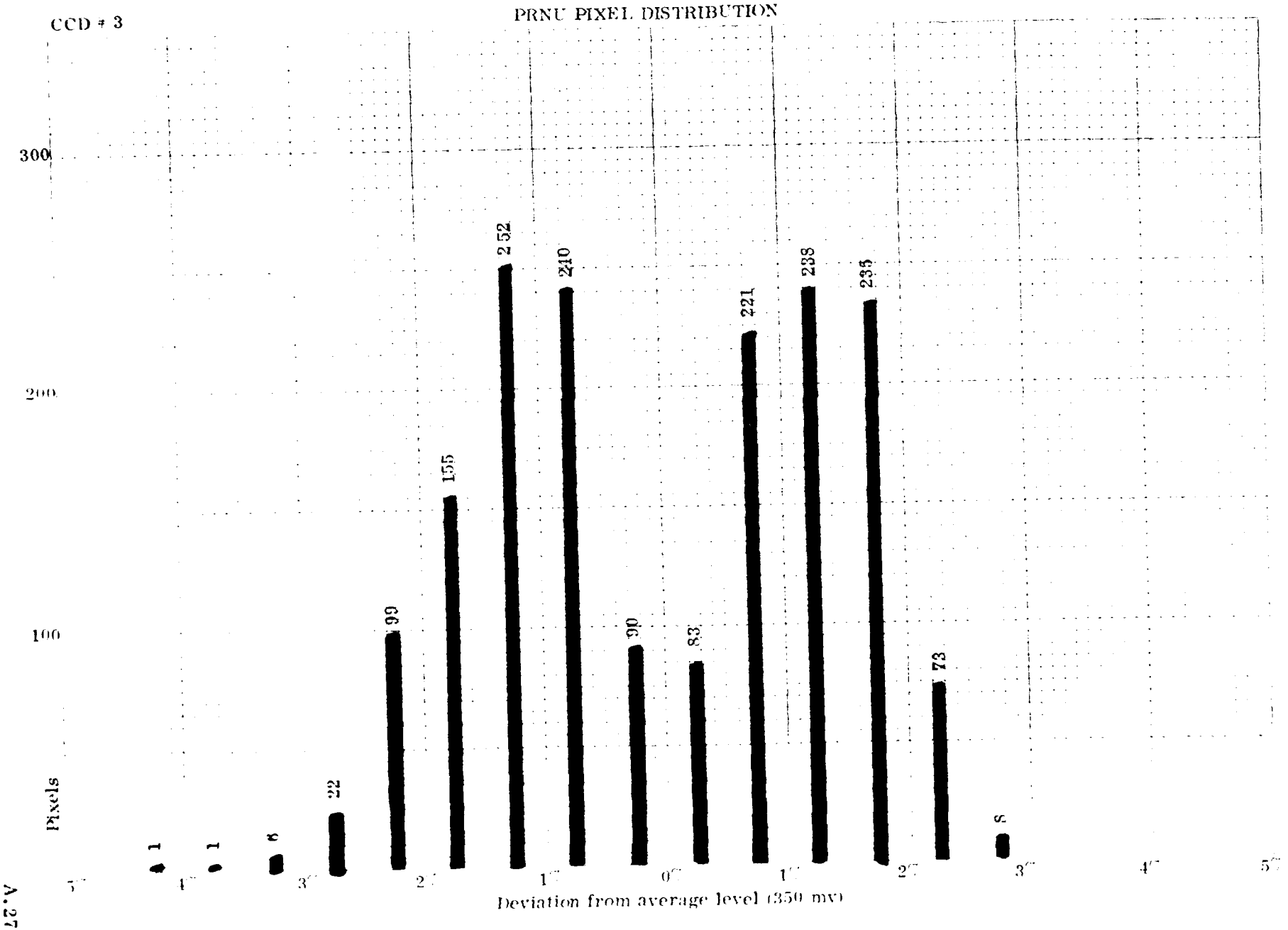

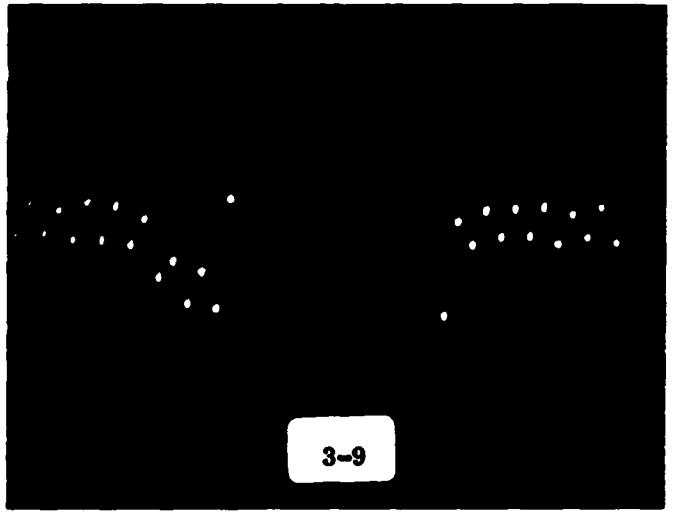
3-9

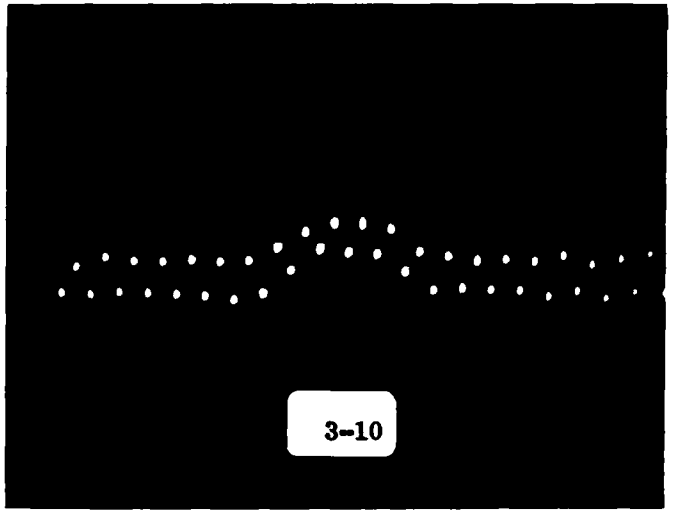
3-10

CAI FOCAL PLANE ARRAY DATA

For the entire test, $f_{\varphi R}$ = 1 MHz.

ADS was measured by:

1. Covering the fixture with black velvet.
2. Extinguishing the lamp.
3. Adjusting the oscilloscope time base for 2 ms/division.
4. Observing the average dark signal.

DSNU was measured by:

1. Adjusting the delayed sweep time base to 1 μs/division.
2. Adjusting vertical sensitivity to 5 mV/division.
3. Adjusting the delayed expanded sweep so as to observe the level of individual pixels.

Vsat was measured by:

1. Increasing the lamp intensity until one of the registers began to flood and recording that level.

PRNU was measured by:

1. Adjusting the light level until the average video level.

Table A-2 illustrates the data gathered for eight of the CCD's

Odd/even imbalance was less than 2 percent for the selected CCD's and for two of the nonselected CCD's. However, one of the nonselected CCD's had an odd/even imbalance of approximately 5 percent.

Of the eight CCD's tested, six had a significant increase in dark level due to charge generated in the bulk by IR. Two of the selected CCD's were only slightly affected in this respect due to IR.

In regards to PRNU, there was little, if any, difference between the selected versus nonselected CCD's.

TABLE A-2

CCD DATA

	SELECTED						NONSELECTED		
Serial Number	405-24-4	405-13-6	375R-334-47-12	375R-334-47-11	360R-322-6(1)	Z356R-45-14	Z356-353-35-181	Z356R-45-17	Z356R-21-7
Vsat	700 mV	620 mV	940 mV	970 mV	880 mV	NOT HERMETICALLY SEALED	680 mV	750 mV	650 mV
PRNU @ 375 mV avg (with IR filter)	365 26 mVpp 391	370 17 mVpp 387	365 20 mVpp 385	370 22 mVpp 392	360 36 mVpp 396		353 35 mVpp 388	367 18 mVpp 385	366 19 mVpp 385
PRNU @ 375 mV avg (without IR filter)	362 26 mVpp 388	359 24 mVpp 383	363 22 mVpp 385	367 16 mVpp 383	358 32 mVpp 390		355 32 mVpp 387	366 19 mVpp 385	362 25 mVpp 387
ADS	5.5 mV	10 mV	1.25 mV	1.5 mV	3.5 mV		2.25 mV	2.5 mV	2.5 mV
DSNU	4.25 1.5 mVp 7.0	7.5 3 mVp 13	1 mV 0.75 mVp 2 mV	1 mV 0.5 mVp 2 mV	3.5 1.5 mVp 5		2 4.25 mVp 6.25	1 mV 1.5 mVp 3 mV	1.5 3.5 mVp 6.0
Dark level @ 375 mV avg-not using IR filter	25 mV	30 mV	120 mV	125 mV	120 mV		150 mV	112 mV	165 mV
P-P dark noise	.75 mV	1.125 mV	.75 mV	.75 mV	.75 mV		1.125 mV	.75 mV	.75 mV
DR	933	551	1253	1293	1173		604	1000	867

In regards to ADS and DSNU, again there was little difference between the selected and nonselected parts. However, one of the nonselected parts did have eleven significant spikes due to dark current. Of these, three were in excess of 4 mV, three were approximately 3 mV and five were less than 2 mV.

Of the six selected CCD's, one has a cracked window, one is not hermetically sealed and has a scratch across the photosite structure, and one has a seal that appears to be considerably pitted.

The following are comments concerning the six selected CCD's:

• Serial No. Z356R-45-14	Should be rejected due to lack of hermetic seal and damage to photosite structure.
• Serial No. 360R-322-6(1)	Should be rejected due to PRNU and cracked window.
• Serial No. 375R-334-47-11	Should be rejected due to PRNU (window seal appears to be pitted.)
• Serial No. 375R-334-47-12	Appears to meet specifications.
• Serial No. 405-13-6	Appears to meet specifications.
• Serial No. 405-24-4	Should be rejected due to PRNU.

ND