AD-A091 424 SINGER CO BINGHAMTON NY LINK DIV F/G 19/3
DESIGN DEFINITION STUDY REPORT. FULL CREW INTERACTION SIMULATOR--ETC
JUN 78 N61339-77-C-0185
UNCLASSIFIED LR-895-VOL-3 NAVTRAEQUIPC-77-C-0185-000 NL

1 of 3
AD
A091424

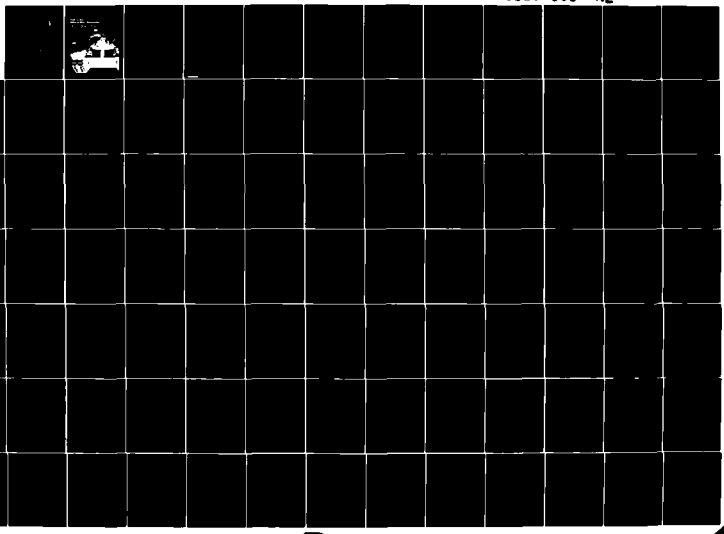

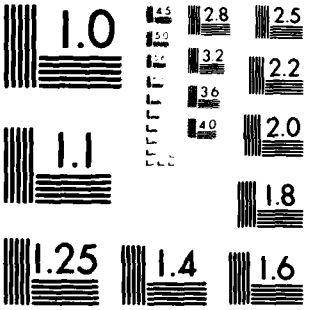

MICROCOPY RESOLUTION TEST CHART
NATIONAL BUREAU OF STANDARDS 1963 A

PHOTOGRAPH THIS SHEET

AD A091424

DTIC ACCESSION NUMBER

III

LEVEL

INVENTORY

Singer Co., Binghamton, NY
Link Div.

Rpt. No. LR-895, Volume III, Final, June 1978

Rpt. No. NAVTRAEQUIPCEN 77-C-0185-0001, v. 3

DOCUMENT IDENTIFICATION

Contract No. N61339-77-C-0185

DISTRIBUTION STATEMENT A

Approved for public release;
Distribution Unlimited

DISTRIBUTION STATEMENT

ACCESSION FOR		
NTIS	GRA&I	☒
DTIC	TAB	☐
UNANNOUNCED		☐
JUSTIFICATION		
BY		
DISTRIBUTION /		
AVAILABILITY CODES		
DIST	AVAIL AND/OR SPECIAL	
A		

DISTRIBUTION STAMP

DTIC
ELECTE
NOV 10 1980
S D
D

DATE ACCESSIONED

80 10 28 060

DATE RECEIVED IN DTIC

PHOTOGRAPH THIS SHEET AND RETURN TO DTIC-DDA-2

DTIC FORM OCT 79 70A

DOCUMENT PROCESSING SHEET

AD A091424

Design Definition Study Report

Full Crew Interaction Simulator

Laboratory Model (FCIS-LM) Device X17B7

prepared for

Naval Training Equipment Center
Orlando, Florida

Link
A DIVISION OF THE SINGER COMPANY

Report No: NAVTRAEQUIPCEN 77-C-0185-0001
LR-895

DESIGN DEFINITION STUDY REPORT

FULL CREW INTERACTION SIMULATOR-LABORATORY MODEL

(DEVICE X17B7)

VOLUME III - VISUAL

Link Division, The SINGER COMPANY
Binghamton, New York 13902

FINAL
June 1978

DOD Distribution Statement

Approved for public release;
Distribution unlimited.

Government Rights in Data Statement

Reproduction of this publication in whole or in part is permitted for any purpose of the United States Government.

Prepared for:
NAVAL TRAINING EQUIPMENT CENTER
Orlando, Florida 32813

80 10 28 060

UNCLASSIFIED

SECURITY CLASSIFICATION OF THIS PAGE (When Data Entered)

REPORT DOCUMENTATION PAGE		READ INSTRUCTIONS BEFORE COMPLETING FORM
1. REPORT NUMBER NAVTRAEQUIPCEN 77-C-0185-0001	2. GOVT ACCESSION NO.	3. RECIPIENT'S CATALOG NUMBER
4. TITLE (and Subtitle) DESIGN DEFINITION STUDY REPORT FULL CREW INTERACTION SIMULATOR-LAB. MODEL (DEVICE X17B7)		5. TYPE OF REPORT & PERIOD COVERED Final June 1978
		6. PERFORMING ORG. REPORT NUMBER LR-895
7. AUTHOR(s)		8. CONTRACT OR GRANT NUMBER(s) N61339-77-C-0185
9. PERFORMING ORGANIZATION NAME AND ADDRESS Link Division, The SINGER COMPANY Binghamton, New York 13902		10. PROGRAM ELEMENT, PROJECT, TASK AREA & WORK UNIT NUMBERS
11. CONTROLLING OFFICE NAME AND ADDRESS NAVAL TRAINING EQUIPMENT CENTER Orlando, Florida 32813		12. REPORT DATE June 1978
		13. NUMBER OF PAGES
14. MONITORING AGENCY NAME & ADDRESS(if different from Controlling Office)		15. SECURITY CLASS. (of this report) UNCLASSIFIED
		15a. DECLASSIFICATION/DOWNGRADING SCHEDULE N/A

16. DISTRIBUTION STATEMENT (of this Report)

Approved for public release; Distribution unlimited

17. DISTRIBUTION STATEMENT (of the abstract entered in Block 20, if different from Report)

18. SUPPLEMENTARY NOTES

Report consists of twelve sections bound in 7 volumes.

19. KEY WORDS (Continue on reverse side if necessary and identify by block number)

20. ABSTRACT (Continue on reverse side if necessary and identify by block number)

DD FORM 1 JAN 73 1473 EDITION OF 1 NOV 65 IS OBSOLETE

UNCLASSIFIED

SECURITY CLASSIFICATION OF THIS PAGE (When Data Entered)

TABLE OF CONTENTS

VOLUME III

SECTION	TITLE	PAGE
VIII		
8.	VISUAL SYSTEMS STUDY AND CONCEPT FORMULATION.	8-1
8.1	General Design Considerations.	8-1
8.1.1	Crew Task Related Considerations	8-1
8.1.2	Crew Skill Related Considerations.	8-1
8.1.3	Crew Equipment Related Considerations.	8-5
8.1.4	Crew Visual Cue Related Considerations	8-5
8.1.4.1	Scene Continuity	8-7
8.1.4.2	Fields of View	8-9
8.1.4.3	Resolution	8-11
8.1.5	Resolution and Field of View Requirements Summary	8-22
8.1.6	System Complexity Considerations	8-22
8.1.7	Hardware Considerations.	8-23
8.1.8	Visual Performance Goals	8-24
8.1.9	Training Considerations.	8-27
8.2	Image Generation	8-29
8.2.1	Design Approaches.	8-29
8.2.1.1	Camera/Model Systems	8-30
8.2.1.2	Camera/Model Plus Film Systems	8-34
8.2.1.3	Camera/Model Plus Digital Image Generation Systems	8-36
8.2.1.4	Film-Based Systems	8-38
8.2.1.5	Digital Image Generation (DIG)	8-40
8.2.1.6	Image Generation Summary	8-55
8.3	Image Display Input Systems.	8-57
8.3.1	Design Approaches.	8-57
8.3.1.1	Oil Deformographic Light Valves.	8-57
8.3.1.2	Liquid Crystal Light Valves (LCLV)	8-59
8.3.1.3	CRT Projectors	8-60
8.3.1.4	CRT Monitors	8-60
8.4	Image Display Viewing.	8-62
8.4.1	Design Approaches.	8-62
8.4.1.1	Flat Screens	8-64
8.4.1.2	Domes.	8-71
8.4.1.3	Collimated Displays.	8-82
8.4.1.4	Refractive Devices	8-93
8.5	Visual System Tradeoff Analysis.	8-102
8.5.1	Image Generation	8-102
8.5.2	Image Display Systems.	8-102
8.5.3	Collimated Display Systems	8-112
8.6	Development of Selected Approach	8-114
8.6.1	DIG - Expanded WAC System.	8-114

TABLE OF CONTENTS

VOLUME III (con't.)

SECTION		TITLE	PAGE
VIII			
	8.6.2	Dome Approach.	8-125
	8.6.3	System Selection	8-147
	8.7	Additional System Performance Considerations	8-151
	8.7.1	Edge Distribution.	8-151
	8.7.2	IOS Repeaters.	8-152
	8.7.3	Iteration Rates.	8-152
	8.7.4	Special Effects.	8-152
	8.7.4.1	Headlights Simulation.	8-152
	8.7.4.2	Variable Weather	8-152
	8.7.4.3	Weapon Effects	8-152
	8.8	Visual System Flexibility.	8-154
	8.8.1	Experimental Flexibility	8-154
	8.8.2	System Expandability	8-155

LIST OF ILLUSTRATIONS

VOLUME III

NUMBER	TITLE	PAGE
8-1	Crew Skills/Mission Criticality/Training Implications Chart.	8-3
8-2	Relative Median Search Time/Error Frequency . .	8-14
8-3	Mean Acquisition Time (3 Subjects).	8-14
8-4	Resolution Required for Minimum Object Dimension	8-17
8-5	Threshold Detectability Curves and System MTFA.	8-19
8-6	Typical DIG System Block Diagram.	8-42
8-7	Optical Instrument Scene Generation Scheme. . .	8-44
8-8	Commander/Loader Out of the Hatch Visual Scene Generation Scheme	8-45
8-9	Alternate Approach With Reduced Complexity . .	8-46
8-10	DIG Block Diagram-FCIS-LM Configuration	8-48
8-11	DIG Visual/Tactics Interface.	8-54
8-12	Rear Projection Screen Arrangement.	8-65
8-13	Typical Screen Gains.	8-66
8-14	Reflective/Retrodirective - Gain Envelopes. . .	8-68
8-15	Projector/Flat Screen Arrangement	8-69
8-16	Large Facility Type Dome Arrangement.	8-72
8-17	Large Facility Dome-Sectional View.	8-73
8-18	Dome and Trailer Arrangement.	8-77
8-19	Medium Dome/Projector/Platform Arrangement. . .	8-78
8-20	Small Dome/Motion Platform Arrangement.	8-79
8-21	Small Dome Geometry	8-80
8-22	Bend Angle/Peak Gain Plot	8-81
8-23	WAC Window Geometry - Commander	8-84
8-24	WAC Window Display Element - Plan	8-85
8-25	WAC Multiple Configuration.	8-86
8-26	WAC Window Configuration.	8-87
8-27	WAC Field of View - 4 Elements.	8-88
8-28	Driver's WAC Display Arrangement.	8-89
8-29	Expanded WAC Windows-Driver	POUCH
8-30	Expanded WAC Windows-Tank Commander/Loader. . .	POUCH
8-31	Optical Layout for Powered Sights	8-96
8-32	Optical Layout for Binoculars	8-99
8-33	Binocular Pantograph Arrangement.	8-100
8-34	Tank Commander's Display - 14' Dome	POUCH
8-35	Tank Driver's Display - 14' Dome.	POUCH
8-36	Expanded WAC System Configuration	8-115A
8-37	Kelly Chart of Color Designation for Lights . .	8-117
8-38	Display System Electronics.	8-120
8-39	CRT Dynamic Registration Block Diagram.	8-123
8-40	Fighting Station Projection Optics.	8-129
8-41	Dome Distortion Geometry.	8-131

LIST OF ILLUSTRATIONS

VOLUME III (con't.)

NUMBER	TITLE	PAGE
8-42	Screen Gain Curve.	8-133
8-43	Commander's Field of View - Various Positions.	8-134
8-44	Vision Block Correction.	8-136
8-45	Driver's In-Hatch Field of view - Vision Block.	8-138
8-46	Driver's Out-of-Hatch Field of View.	8-139
8-47	Driver's Projection Optics	8-140
8-48	Driver's Night Vision Device	8-142
8-49	Main Gun Flash Device.	8-144
8-50	Recommended FCIS-LM Visual System Configuration.	8-146

LIST OF TABLES

VOLUME III

NUMBER	TITLE	PAGE
8-1 thru 8-4	Refer to VOLUME II	
8-5	M60A3 Optical Devices.	8-6
8-6	Factors Influencing Target Detection and Recognition.	8-12
8-7	Levels of Object Discrimination.	8-16
8-8	Johnson's Criteria	8-16
8-9	Resolution and Field of View Requirements. . .	8-22
8-10	Minimum Visual Performance Goals	8-25
8-11	DIG Performance Criteria	8-43
8-12	Display Input Equipment Tradeoff Considerations	8-58
8-13	Tradeoff Analysis Chart-Visual Display Viewing Devices.	8-106
8-14	Tradeoff Analysis Chart-Visual Display Input Devices-Large Dome	8-107
8-15	Tradeoff Analysis Chart-Visual Display Input Devices-Medium Dome.	8-108
8-16	Tradeoff Analysis Chart-Visual Display Input Devices-Small Dome	8-109
8-17	Tradeoff Analysis Chart-Visual Display Subsystems	8-110
8-18	Tradeoff Analysis Chart-Visual Collimated Display Subsystems	8-113
8-19	DIG/Expanded WAC Performance Characteristics .	8-122
8-20	Fighting Station Resolution Determination. . .	8-128
8-21	Driver Station Resolution Determination. . . .	8-141
8-22	Tabulation Of Principal Features	8-148
8-23	Tradeoff Anaysis Chart-Display System.	8-150

SECTION VIII

8. VISUAL SYSTEMS STUDY AND CONCEPT FORMULATION

The requirement to simulate real-world outdoor visual scenes for training devices has been for several years, and still is today, the most challenging problem facing the simulation industry. In recognizing the fact that technology is not available to provide the level of simulation and realism desired, and that performance limited systems must be relied upon to present these visual scenes, it becomes extremely important that the resources and technology that are available be properly allocated and utilized so to achieve the best performance and yield the maximum training value possible. Throughout the following sections, goals for visual performance and training objectives are established, and a number of different design approaches to meeting these goals are investigated and developed. These approaches are then evaluated in detail and a selection is made based on a tradeoff of performance, cost, reliability and other important factors.

8.1 General Design Considerations

8.1.1 Crew Task Related Considerations. In Section 5, the tasks that the M60A3 tank crews have to perform during tactical situations were analyzed and tabulated. The charts included in Section 5, and presented here for convenience, summarize the tasks and the pertinent visual cues associated with various missions. These tasks, or more directly, the visual cues, must be related to specific visual performance requirements in such a manner to reduce the demand on technology to levels that are both achievable and reliable, and at the same time, maintain a high degree of training value. See Tables 8-1 through 8-4.

8.1.2 Crew Skill Related Considerations. A very cursory examination of the preceding sections indicates that tank crews must be proficient in six different skills in order to perform successfully in the various combat situations anticipated for the M60A3. These skills may be categorized as follows:

- Tank/Systems Maintenance
- Tank/Systems Operation
- Basic Driving, Loading, Gunnery
- Crew Tactical Procedures
- Target Detection, Acquisition
- Tactical Appreciation

Figure 8-1 attempts to illustrate the relationship between these skills and mission criticality and the associated training implications. Training in each of the above categories is important and must be provided on an individual and crew basis in appropriate settings in order to be effective.

In the family of crew skills (Figure 8-1), the six categories have been arranged in ascending order of criticality, which is defined as a combination of direct mission significance and skill complexity. Each skill in the combination involves visual task information, whose complexity also increases with mission criticality. The curve labeled "M" illustrates how mission criticality is related to the importance of visual information for each of the skills. Tank and systems maintenance, at the crew level, involve only single or minimal visual cues for their performance.

System operation involves more complex visual information, as the various weapons, sighting and automotive systems are operated in the visual environment. Basic driving and gunnery involve still more complex visual cues, and have more immediate impact on the effectiveness of the tank in its combat missions. The loading of the main and coax guns does not involve any complex visual information from outside the turret, but is crucial to the success of the tank.

Crew tactical procedures are the more or less fixed procedures the crew uses in performing basic tank missions. The standardization of procedures permits effective crew interaction, because it helps each member of the crew to anticipate what is required of him under various well-defined circumstances, and also what each other member of the crew is required to do. Visual cuing is especially important to guide crew activity, in defining the situation existing at a given time and, thus the responses required due to exposure of the crew to a wide variety of situations which are defined largely by the visual information available to the crew. Practice in crew procedures is especially critical, because it permits the crew to develop the accuracy, the timing, and the speed required in evading, engaging, and destroying threats in the minimum time.

Much of the tank's effectiveness depends on the ability of the crew to make tactical decisions for rapid, accurate and sometimes complex discriminations among minimal and fleeting cues to threat activity, location, type and range. The visual factors involved in this skill are extremely complex and limited in availability in real-world practice; also exceed the capabil-

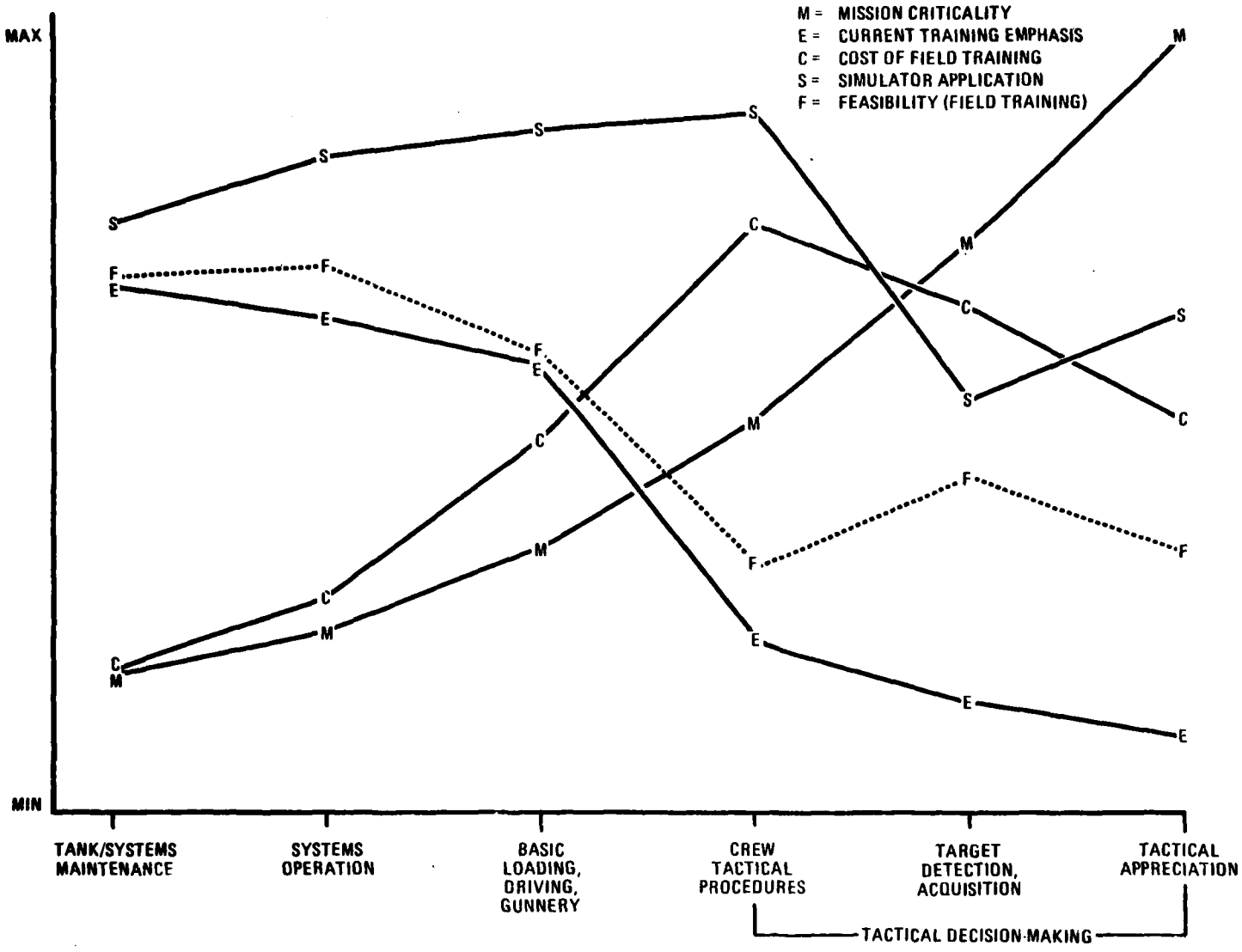

Figure 8-1 Crew Skills/Mission Criticality/Training Implications Chart

ities of the current visual simulation technology. Tactical appreciation is a similar skill and its training is, currently, limited by the same constraints. It requires extensive practice in evaluation of different types of terrain, vegetation and cultural features in complex tactical situations and in a wide variety of missions. Skill in perceiving and evaluating the overall tactical environment is required primarily of the commander, but crews who have this skill are more effective and survive longer than crews who rely only on the tactical sense of the commander.

Proficiency in each of the six areas listed in Figure 8-1 is essential to effective M60A3 combat operations. Each skill is trained in current crew training programs, but some are neglected for reasons of cost and general feasibility. The curve labeled "C" is an estimate of the relative cost of providing effective training in each area in field (nonsimulator) settings. Cost tends to increase with mission criticality largely because of the visual cues required for effective training, and because of the interactions required between the tank and the visual environment. Crew training in tactical procedures requires a great deal of terrain, relatively free of the effects of prior tank and threat movement and firing, and it requires that many interactive threats be involved. The cost of field training in target detection is somewhat lower, because of the reduced need for the movement of actual tanks in the terrain and for the firing of live ammunition. Similarly, field training in tactical appreciation relies more heavily on practice in definitive skills than actual movement over the terrain, and tank/threat interaction.

The curve labeled "E" is an estimate of the emphasis placed on the six skills in current tank crew training programs. System maintenance and operation tend to be emphasized because they require little in the way of terrain, fuel, targets and ammunition. Basic loading, driving and gunnery require more facilities and support, and tend to involve proportionately less attention in current programs. Requirements for terrain and other resources limit the amount of crew interaction (crew tactical procedures) training possible, but the other two skills included in the general category of tactical decision-making tend to be neglected for other reasons. Emphasis on gunnery, and the expenses involved has to some extent, detracted from field training in target detection and tactical appreciation. Curve "F" is an estimate of the feasibility of field training; it indicates that some approaches (use of inexpensive vehicles, etc.) could produce significant improvements in some crew tactical skills at little increase in cost. Effective training in target detection and tactical appreciation can be performed in field settings without expensive equipment, and with minimal effect on the terrain used in training.

Training involving tank movement, fuel and ammunition consumption, interactive targets, and terrain negotiation, tends to be prohibitive in terms of cost and vehicle stresses.
A great deal of this training can be provided through the use of simulation. Curve "S" indicates the relative feasibility of simulation technology in M60A3 training. In the lower skill areas, simulation can reduce training costs and increase training efficiency, both by providing inexpensive visual cuing, and by efficiently controlling the training situation. Simulation can provide some training in the principle of target detection and tactical appreciation, but can add little to the training available in field settings. Current simulation technology is limited in its ability to provide visual cues adequate to effectively train in these two areas.

The most effective area of simulation, using the current technology, is in the area of crew tactical procedures and crew interaction training. Relatively simple (for tank crews) visual cues can be provided in almost unlimited variety, to support practice in the articulation of individual crew skills within typical tank missions. The combination of current training approaches, expansions of field training programs, and simulation can vastly improve the combat proficiency of M60A3 crews.

8.1.3 Crew Equipment Related Considerations. The equipment used by M60A3 crew members in the performance of tasks in tactical engagements and terrain appreciation includes the various optical instruments and viewing blocks. Table 8-5 lists these optical devices, together with the most important characteristics.

8.1.4 Crew Visual Cue Related Considerations. The visual requirements analysis presented in section 7.1 states that effective interactive crew training does not require the crew to respond to all the information available in a typical tank combat situation. This leads to the concept that the development of a cost-effective visual system should consider primarily only those visual cues necessary for crew members to initiate action in response to the various tactical situations that could be encountered, with those simulated cues having the levels of fidelity necessary to effectively provide training transfer to the M60A3 vehicle.

It is also recognized that it is the purpose of the laboratory model to do the final tradeoffs necessary to provide the final trainer design configuration. However, the financial aspects concerned with the development of a new system such as that required for the FCIS-LM device, with the maintenance and reliability goals desired, make it necessary to reduce the system requirements to achievable levels, while still providing cues necessary for the performance of the most vital tasks, and moreover, providing the expansion or elimination techniques that will permit the needed experimental flexibility.

TABLE 8-5 M60A3 OPTICAL DEVICES

DEVICE AND USER	MAGNIFICATION	FIELD OF VIEW
Tank Commander		
o Binoculars	8X	73°
o Thermal Sight	8X	7.3°
o Periscope	8X	8°
o Laser Range Finder	Low-High	10°, 5°
Loader		
o Periscope	IX	72° X 26°
Gunner		
o Periscope	IX	30.5° X 5.8°
o Thermal Sight	8X	7.3°
o Perisocpe	8X	7.3°
o Telescope	8X	7.5°
Driver		
o Night Image Sight	IX	45° X 38°

Previous sections have provided the first level of reduction of the visual requirement by spelling out the cues and the characteristics necessary to fulfill the specific training requirement. However, the amount of information contained within specific visual scenes, including critical target images and the characteristics of these target images, could create as great a requirement on the hardware in terms of system performance, as the real world. It is vital to go a step further in reducing the requirements to produce a viable state-of-the-art system.The cues must be analyzed in detail, specifically the requirements for scene content and continuity, fields of view, resolution, etc., in order to relate the requirements to hardware goals.

8.1.4.1 Scene Continuity. The factors to be considered here concern the application of different image source types for individual and interactive crew viewing; e.g., can the gunner be provided with a camera-model type scene with its enhanced content for his unity viewing device,and simultaneously, a digital image scene (DIG) with relatively sketchy scene content for the powered instruments; or must the scene content, quality, and texture be consistent from device to device? Likewise, must all viewers observe the same level of scene quality, as with an all-film or camera/model presentation, or an all-DIG system, or can a mixture of image sources and scene contents be used without compromising the training value?

The importance of proper perspective for each crew member must also be examined and limits established for the maximum allowable perspective errors and angular displacement errors.

In viewing Tables 8-1 through 8-4, there are several additional areas of concern that need to be discussed from a training standpoint, and which have a bearing upon the questions posed earlier.

8.1.4.1.1 Optics vs. Unity Power: Same Person.

Driver - The driver has three modes of viewing, two in the closed-hatch mode, and one when he drives with the hatch open. In the open-hatch mode, his vertical field of view is limited by the turret, the hull and by the fenders. His horizontal field is limited by the turret base. Because of the periscopic effect of the vision blocks, the driver's eyepoint is essentially the same in the head-up and head-down modes, each mode unfortunately providing less field of view than the driver would like to have. At night, the driver may use the image-intensifier system, which also has about the same eyepoint position. This system provides a smaller field of view than is available in daylight viewing, but the driver can manually adjust the field of view by moving the equipment around in its mount.

Loader - The loader's head-up eyepoint is higher than his closed-hatch eyepoint, which uses a unity power periscope. This periscope is manually adjusted for azimuth and elevation. The loader will never compare the two scenes available to him, and he makes little or no use of reference points on the tank in his visual observations. As a result, there is no need for close correlation between the two scenes.

Gunner - The gunner can compare his IR view of the scene with his daylight view, and frequently does this in order to detect or acquire concealed threats. Therefore, these scenes must be closely correlated.

However, the gunner does not need to compare his telescope scene with his IR or periscope scenes, or with his unity power window. Thus, these do not need to be closely coordinated, although the various reticles must be correlated with the main and coax guns.

Tank Commander - Like the gunner, the commander will shift from the IR to the periscope and back, to use the unique capabilities of these two systems to the best advantage in target acquisition. Thus, the two scenes must be closely correlated. The commander will also move from each of the two cupola systems to the laser rangefinder eyepiece. These scenes must be correlated, to allow for the case when the cupola is locked to the turret. The eyepoints of the two systems (IR/optics and LRF) are different; but not enough to distort any cues seen from the two positions, one eyepoint for both the cupola and rangefinder optics is sufficient.

8.1.4.1.2 Interpersonal Scene Relationships.

In some circumstances, each member of the crew may view the same objects in his respective field of view. However, the eyepoint differences from one position to the other provides somewhat different views. The most important visual correlations are between the commander and the gunner and between the commander and the driver, since the commander directs both these crewmen in terms of visual scene elements.

Commander/Gunner - The commander's cupola periscope is located higher than the gunner's periscope, thus providing him with a better view of objects in the foreground. The small amount of parallax involved makes differences between the two views almost indistinguishable at the ranges at which the commander and gunner cooperate, that is beyond 400 or 500 meters. When the cupola is aligned with the main gun and when the turret and cupola optics are used, no training value will be lost if the commander's and the gunner's scenes are generated using the same eyepoint. Sight differences in the effects of obscuration from main gun firing could be simulated by the special effects system, providing the commander with slightly better visibility at that time.

Commander/Driver - Parallax between the commander's eyepoint view and that of the driver is greater than that between the commander and gunner. In addition, the commander and gunner must cooperate with respect to scene elements in the immediate foreground, at ranges less than 200 meters. The commander points out landmarks to the driver, to help him select the best route, and he also provides guidance in obstacle negotiation and avoidance. For these operations, the driver's eyepoint and the commander's must be accurately represented. If the same eyepoint location must be used for these two crew stations it must not be the driver's, since this would severely limit the commander's long-range view. Likewise, if the commander's eyepoint were used, it would distort the driver's view of the terrain to his immediate front. Any logical compromise in eyepoint location will distort both points of view with respect to important aspects of each crewmember's function.

8.1.4.2 Fields of View. As noted previously, the field of view of the driver is severely limited by the structure of the tank and by its optical viewing systems. The driver sits under the turret and looks over the front slope of the fenders. Whether operating head-up or head-down, his field of view is limited both horizontally and vertically.

The driver selects routes consistent with the needs of the crew, and negotiates the route selected in such a way as to support the activities of the rest of the crew. If the loader and the commander are searching for targets, the driver stays away from features which would obscure their view. If threats are suspected, or have been detected by the crew or an adjacent tank, the driver selects a route affording both cover and a view of the target area from the turret. If a moving engagement is imminent, the driver selects the route offering the best combination of cover and smoothness, to maintain the turret steady for sighting, firing and sensing.

The driver's field of view must be large enough to contain different routes having different effects on the tank and on the crew. It need not be as large as that available in the tank, but must permit the driver to see each fender, and while on level ground, to see low-flying helicopters, ATGM's, targets and threat indications in the terrain. The fenders subtend a 40° angle on each side and the front skirt is -15° down. The upward field of view should be the same as the tank commander, or $+30^{\circ}$.

The gunner's fields of view are also dictated by his unity power window, the telescope, thermal sight and periscope. None of these fields of view is constrained by visual simulation technology, so they will be identical to those available in the tank.

The loader and the tank commander operate with head and shoulders out of their hatches, as much as possible. This provides a 360° horizontal field of view, and a vertical field of view of 90°. This permits them to search almost all of the terrain around the tank, and the sky. Limiting the fields of view of the loader and the commander, in the tank, would be disastrous, but in the FCIS-LM device they can be restricted to reasonable values, with minimum effect on crew interaction training.

The loader uses his field of view to search areas designated by the commander. In general, the loader searches on one flank and to the rear, reporting events of concern to the tank commander. Restricting the loader's field of view, in the real world, limits the number of scene elements the loader must examine. In the simulator, the effect is somewhat different, because the mission scenario used in crew interaction training can provide each member of the crew with the scene elements required for effective practice, even though the field of view over which they appear is not totally realistic.

The commander's field of view is the same as the loader's, but has quite different significance in interactive crew training. The commander's visual scene must permit him to make and act on decisions about events represented there. The commander is responsible for all aspects of the tank's employment, and so he must continuously evaluate the tactical situation represented in the visual scene, from the area of a few yards from the tank to the limits of vision. He must also attend to the airspace over the terrain, to detect airborne threats.

Most surface threats to the M60A3 engage by direct fire, placing them within the tank's line of sight. They also make maximum use of cover and concealment, and of long-range weapons, permitting them to engage from positions where the tank commander cannot see them with unaided vision. As a result, the commander is forced to use some form of magnification to detect and identify threats which his crew must engage. The tank thermal sight and the commander's periscope provide magnified images which greatly facilitate target detection at extreme range, but their use limits the commander's field of view. Even though he can use the cupola vision blocks and slew the cupola optics to any part of the visual scene, the commander loses his ability to observe many secondary cues to threat activity and location. In effect, limiting him to searching through the cupola optics, limits his ability to respond to critical events outside the fields of view of the vision blocks and optical instruments. This limits, in turn, his ability to exercise the crew in responding to events taking place throughout the battlefield.

Since the commander's job is to direct the crew in interactive, combat-like exercises and engagements, his field-of-view re-

quirement is related more to the events taking place in his view than to the total visual field available. The field of view must be large enough to force the commander to scan and to use his peripheral vision, but need not be as large as that available in the tank. Horizontally, the commander should be able to scan at least 180° (+90° from the centerline of the main gun). The vertical FOV must permit the display of high-performance aircraft and helicopters, but it does not need to be complete. Fixed-wing aircraft fly too high for tank engagement, but in an air-to-ground attack, they approach at a 30° dive angle. Helicopters make maximum use of the terrain for cover and concealment and thus appear, to the tank, at even lower vertical angles. The commander must be able to look up at least 30° from the horizontal, and down at an angle permitting a view of the main gun and the terrain immediately in front of the hull, to permit him to provide guidance to the driver. Since the commander may see down even more than the driver, the down angle should be -25° minimum.

8.1.4.3 Resolution. Resolution of the visual display, particularly that presented to the turret crew members is important in the development of crew skills in terrain appreciation and target detection. In fact, the quality of the tactical imagery will determine more than any other feature the ultimate success of the FCIS-LM device for interactive crew training.

8.1.4.3.1 Unaided Eye Target Detection. Many factors enter into the function of target detection, and although it has been the subject of numerous studies,and a great deal of information has been generated,it is still one of the most difficult tasks to perform with any degree of certainty. With a good prior knowledge of target type and approximate location, a target has often been found and "recognized" with less than one resolution element. However, if there is no prior information on the target, it has been found that the object must subtend 12-20 arc-minutes to the eye to be found in a field of view of reasonable clutter.

A listing of factors involved in target detection, recognition and identification by Herschel Self ("Image Evaluation for the Performance of a Human Observer", presented at the NATO Symposium on Image Evaluation, Keenstlerhaus, Munich, 1969) is presented in Table 8-6. This table was developed in the context of an image interpretation system; i.e., a narrow-field image display system.

Obviously, there is no way to describe in detail all of the data necessary to completely classify every target type, but even if this were done, any classification made would not have any definable data to support a conclusion as to the information content needed.

TABLE 8-6 FACTORS INFLUENCING TARGET DETECTION AND RECOGNITION.

The scene (or total picture)

1. The size of the picture or displayed image.
2. Numbers, sizes, shapes, and scene distribution of areas contextually likely to contain the target object.
3. Scene objects: numbers, shapes and patterns, achromatic and color contrasts, colors (hue, saturation, lightness), acutance, amount of resolved details, all both absolutely and relative to the target object.
4. Scene distribution of objects.
5. Granularity, noise.
6. Total available information content and amount of each type of information. This is one way of summing up 1–5 plus other elements.
7. Average image brightness or lightness.
8. Contextual cues to target object location.

The target object

1. Location in the image format.
2. Location in the scene.
3. Shape and pattern.
4. Size, color, resolution(s), acutance, lightness or brightness.
5. Type and degree of isolation from background and objects.

The test subject (Observer)

Training, experience, native ability, instructions and tasks briefing, search habits, motivation, compromise on speed versus accuracy, assumptions.

* Self (1969), Table IV-1. Not all factors listed in each group are independent of other factors under the same heading and the list is neither systematic nor complete.

These evaluation factors are even more difficult to classify for the FCIS system,but will enter into the FCIS system usage simply because the FCIS is an image transfer device. However, these factors, even though all have not been studied, do provide some very strong parameters when coupled with other studies which have investigated the effect of these and other factors. Therefore, further relationships must be determined in order to satisfactorily develop system performance goals.

The FCIS simulator is designed to operate in a microcosm of the real world, providing all of the suspense and tension of a real tactical scenario. Therefore,the scenes being presented as the FCIS moves throughout its "world", must contain targets not unlike the expected threat to be faced.

In actual combat, threats go to great lengths to avoid being detected, and will move through the terrain using unlikely routes, maximum cover, and in general, they will not be where they are expected to be. Thus the TC can most assuredly have little advanced knowledge of the extent and even type of threat to be expected, or where they will first be located. Thus it is evident, that in the FCIS-LM device, more definitive information must be obtained from the visual scene by the crew, than just a mere "blob" or a single resolution element in order for it to be recognized as a potential threat, and not just a rock or tree.

The question now arises: What type of information, and at what range, is needed to perform the tasks? Data from additional studies may be of help in answering some of these questions , and in guiding us to more definitive goals.

In 1960, two studies were conducted to determine the relationship between object detection by size and time and/or error. Study results shown in Figure 8-2 represent a study by Steidman and Baker (1960). Figure 8-3 represents a study by Ludwig and Miller.

Both studies provided similar results; that is, it takes a minimum of 10 seconds to locate an object of about 12 arc minutes in size. These studies used relatively uncluttered scenes with a relatively small field of view when compared with the requirements of the FCIS-LM, i.e.,a very wide field of view.
These results were recently verified in a study by Barnes and Doss, (1976), wherein helicopters were flown down a corridor in which tanks were parked. The observers, located in the helicopter, were instructed to find the tanks.

The observers were all well trained combat-ready personnel. The mean range of detection for the camouflage painted tanks was 810 meters. Assuming the tanks were about 3 meters high, then the tank height at 810 meters would be about 13 arc-minutes.

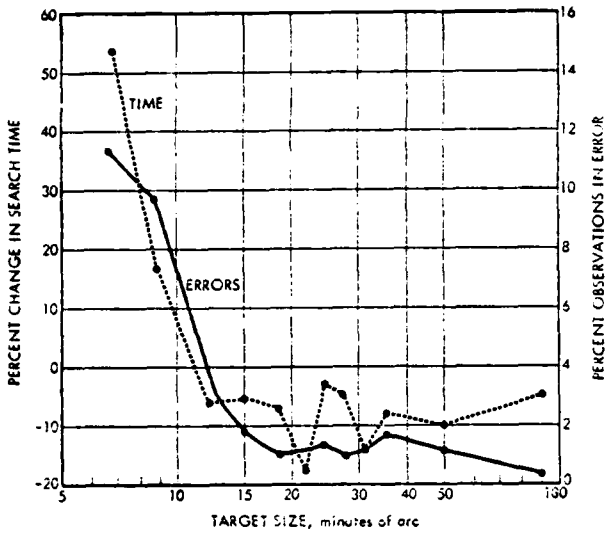

Relative increase or decrease in median-search time and frequency of errors as a function of the visual angle subtense of the targets. Each point was derived from 512 observations. [After Steedman and Baker (1960).]

Figure 8-2 Relative Median Search Time/Error Frequency

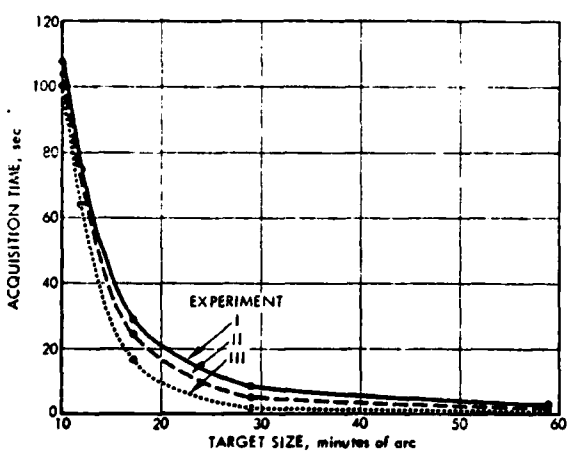

Mean acquisition time of three subjects for three experiments. [After Ludvigh and Miller (1960).]

Figure 8-3 Mean Acquisition Time (3 Subjects)

Since the observer knew the tanks would lie close to the flight corridor, this condition satisfies very closely the previous tests.

Based upon the original tests, reinforced by the recent helicopter test, it would be a legitimate goal to have an object which would be recognizable as a potential target at the range corresponding to a 3-meter high target and subtending an angle of 12 arc-minutes to the eye;conversely, if a tank were 3 meters high and a head-on view were taken as worst case, the image at 12 arc-minutes corresponds to a range of 860 meters. If this goal of target resolution at 860 meters were achieved, then obviously more resolvable elements across the length would be obtained if the tank were turned side-ways.

Now the question arises: What is needed in terms of resolution to achieve a goal of target detection at 860 meters? To determine the resolution goals, the work of John Johnson of the Night Vision Laboratories, reported in 1958, will be used as the guide.

Johnson's work, recognized as the 'authority' for image recognition results, explored the relationship between resolution elements and four levels of of object discrimination: Detection, Orientation , Recognition, and Identification. Table 8-7 lists the four classes and gives the meaning of each term.

The resolution criterion for each of these terms has been widely used in system design in the past. Rather than using the normal criterion of line-pairs, Table 8-8 presents the data in terms of television line resolution, since many displays are of the raster based type.

The background limits of resolution must be carefully stated before they can be used accurately; the original data was derived by moving an object out to a distance until the given criterion was met (Orientation, Recognition, etc.). Then a chart equal to the height of the object was placed next to the object and the number of lines recorded at the point when the lines were just visible. Thus the data was derived from limiting resolution criteria, and the object's location was known by prior across the minimum distance. Therefore, any use of Johnson's criteria must be in relation to the minimum dimension of the object, such as the height of a tank or the width of a soldier. These criteria are illustrated in Figure 8-4.

There are still further restrictions that must be considered before the Johnson criteria are applied to a raster scan system. Since the data were derived from real-world situations,where the eye forms the limiting acuity to the object, and the object has high contrast to begin with, the use of the resolution criteria must be in a atmosphere where the acuity of the eye is

TABLE 8-7 LEVELS OF OBJECT DISCRIMINATION

Classification of discrimination level	Meaning
Detection	An object is present
Orientation	The object is approximately symmetric or asymmetric and its orientation may be discerned
Recognition	The class to which the object belongs may be discerned (e.g., house, truck, man, etc.)
Identification	The target can be described to the limit of the observer's knowledge (e.g., motel, pickup truck, policeman, etc.)

TABLE 8-8 JOHNSON'S CRITERIA

Johnson's Criteria for the Resolution Required per Minimum Object Dimension versus Discrimination Level

Discrimination level	Resolution per minimum object dimension, TV lines
Detection	$2^{+1.0}_{-0.5}$
Orientation	$2.8^{+0.8}_{-0.4}$
Recognition	$8.0^{+1.6}_{-0.4}$
Identification	$12.8^{+3.2}_{-2.8}$

not impaired, and the contrast and signal-to-noise figures do not degrade the image.

The use of the eye as the limiting factor in data extrapolation by Johnson could have significant impact on the system derivation. The eye's acuity peaks at three arc minutes per element, or six arc minutes per line pair. Any system whose resolution is worse than 6 arc minutes per line pair will require higher modulation than the normal system limiting modulation of 3 percent in order to exceed the human limit. In Johnson's tests the image modulation was high amid a reasonably uncluttered background, with a subject who had a priori knowledge of the target's location. A real-world situation would normally have a target placed in a cluttered background and the observer would have no prior knowledge of its placement. Various other experiments (Rosell and Willson, (1973)), have reached the conclusion that the cluttered background primarily affects the time to find the target, and the target size before detection, but very little else. The need for a reasonable contrast is still evident, and enters into the system parameters.

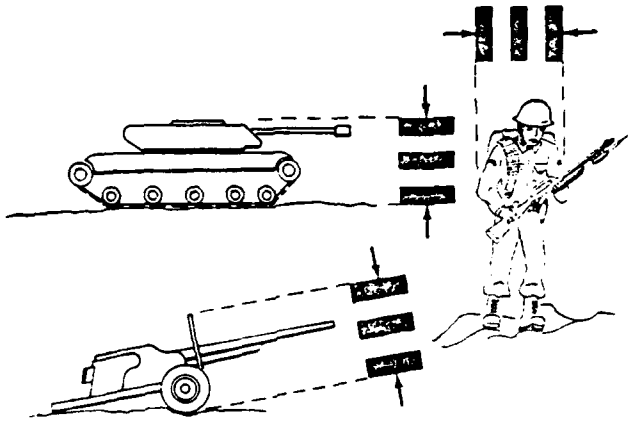

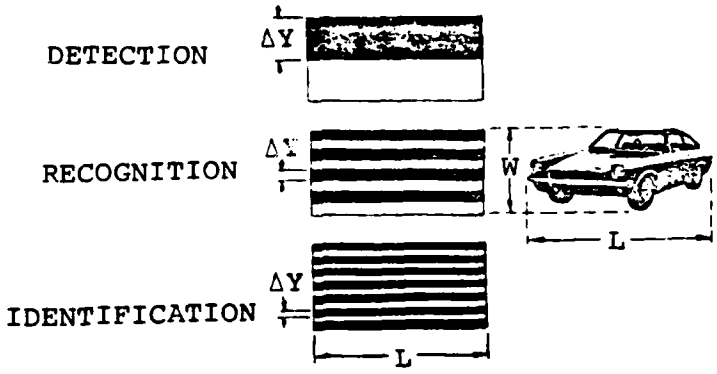

RESOLUTION REQUIRED PER MINIMUM OBJECT DIMENSION
TO ACHIEVE A GIVEN LEVEL OF OBJECT DISCRIMINATION
EXPRESSED IN TERMS OF AN EQUIVALENT BAR PATTERN

Figure 8-4 Resolution Required for Minimum Object Dimension

Signal-to Noise ratio (SNR) is a very critical factor in determining the usefulness of any given "limiting" resolution number for determining task definition. The data illustrated in Figure 8-5 is taken from Snyder (1973). Even though the authors disclaimed its use beyond the 945-line system used in the test, this data can be safely extended to show that if the limiting resolution criteria, an SNR of greater than 32db is required.

Two criteria have now been established; one being the need to display an adequate threat possibility at 12 arc-minutes, and secondly, that Johnson's criteria of resolution for various levels of discrimination is necessary, at the 12 arc-minute target size in order to provide adequate training.

Normally, the tank commander observes the battle area with unaided vision and binoculars. He uses unaided vision to orient himself with the terrain and to detect gross signs of threat activity. He uses the binoculars to examine likely hiding places, and to identify the sources and exact locations of possible threat indications. Because he can shift quickly from unaided to powered vision, scanning his entire field of view without delay, he can respond to a large number of tactical events, each requiring a different response on the part of the crew.

From the description of FCIS training with binoculars, it follows that the system must be able to present the target image with enough resolution so that it is recognized as a potential threat, thus causing the TC to lift the binoculars for examination and verification. For the unaided eye this discrimination level between Orientation and Detection lies at the maximum range of 860 meters.

If a median 2.4 resolution elements were placed across the 12 arc-minute image, the minimum system resolution would be

$$\frac{12 \times 2}{2.4} = 10 \text{ arc-minute/line pair}$$

or, 5 arc-minute per element, with a system exceeding 5% MTF at this point. It should be noted that a careful balance of system resolution must be attained in order to avoid false training. It has been determined that in real-world tactical situations the crew member examining a sector of terrain for targets must use a power instrument to determine if the objects being viewed are friend or foe, and to decide which target is the greatest threat to the tank. The FCIS simulated visual system should force the trainee to use the optical devices, while at the same time providing adequate resolution for the remainder of the tactical functions of route selection, burst-on-target determination, etc.

This criteria appears to be realistic since tank crew members verify that it is very difficult to determine type and class of

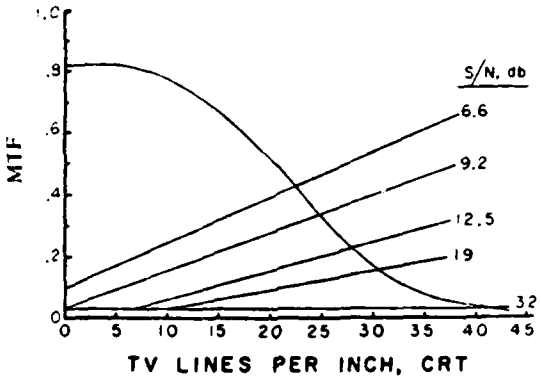

THRESHOLD DETECTABILITY CURVES AND SYSTEM MTFA. SYSTEM LINE RATE, 945; VIDEO BANDWIDTH, 16 MHz; VERTICAL RASTER ON 17-INCH (DIAGONAL) CRT; VIEWING DISTANCE, 40 INCHES. MTF CURVE AND THRESHOLD DETECTABILITY CURVES ARE FOR SQUARE-WAVE BAR PATTERNS .

Figure 8-5 Threshold Detectability Curves and System MTFA

the vehicle with the unaided eye much beyond 500-700 meters even under the best conditions and if the vehicle is somewhat camouflaged, at even closer ranges. The tests involving helicopters (Barnes and Doss) revealed that the mean range for discovering camouflaged tanks was only 400 meters. In that test, it was not necessary to define the class or type of tank, but only to recognize it as a tank.

8.1.4.3.2 Target Detection - Long Range. One of the aims of the FCIS system is to develop a system that will train a tank crew to detect,and bring into an engagement,threats at very long distances out to 3000 meters. These ranges obviously exceed the out-of-hatch unaided eye capability of detection at 860 meters, and normally require a cue other than the mere presence of the vehicle at that range to be detected. Motion of the threat, glint, smoke or dust, all form additional cues other than just resolution that warn the tanks that other vehicles, or potential threats, are present in the field of view. Normally the TC would then be alerted, and he would scan the area with his binoculars to determine the nature of the vehicle, and take whatever action is appropriate for the situation.

These additional cues, or cue supplements, are as vital to successful training in the FCIS as they are in the real world. Thus, the target vehicles must be part of a supplemental cuing scheme to give the viewer indications of potential threats.

As the image becomes smaller, additional cues will be needed; thus the image generation scheme must have the facility to generate the supplemental cues at a contrast high enough to be detected by the unaided eye. Dust and glint are very vital cues used to attract the viewer to the potential threat. These cues must be coincident with the threat placement to facilitate the proper laying of the gun and acquisition of the target by the gunner.

The eye can use less than optimal resolution if there are a sufficient number of supporting cues. Indeed, a single resolution element is sufficient if contextual cues provide a strong supporting force. The supplementary cues of motion, dust, smoke, glint, and weapon flash will allow the recommended 10 arc-minute per line pair system to present a visually perceived threat beyond a range of 2000 meters to the unaided eye. Beyond 2000 meters, the target image itself will be less than a single resolution element high and may not be seen against the background so use of the power instruments will be mandatory. Gun lay and acquisition will depend solely on the supplementary cues. Once acquisition is achieved within the gunner's power optics, the image must be of sufficient quality to allow accurate sighting of the weapon. The use of the power optics, as in the real-world, would provide the necessary magnification to start the required procedures.

The visual system must be able to provide the supplementary cues (smoke, weapon flash, glint, dust) even when there is no visible target, due to the target image being less than one resolution element.

8.1.4.3.3 Power Instrument Usage and Image Requirements. The power instruments provide the magnification that permits the ranging and gunnery accuracy necessary at long ranges. The FCIS-LM visual scenes presented by the power instrument should also provide adequate information to permit judgement as to the threat criticality, gun laying, and determination of friend or foe.

A tank at 3000 meters will appear to be 3.4 arc-minutes high. When magnified by the 8 power telescope or periscope, it will appear 27.4 arc-minutes high. If the requirement at this range is recognition, then the 8-line TV resolution demands an apparent resolution of 3.4 arc-minutes per element, or 6.8 arc-minutes per line pair. If the requirement is for identification, then using Johnson's criterion of 12 lines, the resolution required is 2.27 arc-minutes.

Several mitigating factors that could reduce the required resolution by a significant amount, while not impairing training, must be considered at this point. First, the Warsaw Pact tanks most commonly used have a significantly lower and more rounded outline than the NATO tanks. The outline difference makes it simple to tell the difference between friend or foe, which is the prime goal, rather than to tell which exact tank model it is. This recognition factor has been found to enable identification of a foe at as much as twice the normal range of identification of the type tank.

Secondly, most operational optical instruments are not in the most perfect shape, and can present a rather degraded image to the tanker. The fact is, problem optics, combined with haze, battle smoke, dust, and other factors entering into the large 3000 meter range,create a situation where identification is very difficult and almost impossible. These factors cause the image to be further degraded to the level of "probable" or "potential" threat recognition.

These factors allow the resolution to be degraded to about half, or 4.5 arc-minutes/element or even a little worse, without degrading the training performance significantly. The resolution across the tank height would amount to 5 or 6 elements.

Since haze and other optical effects are very real factors that almost always degrade the image, these visual effects must be part of the optical power scenery if realism is to be preserved. It is these combined effects - haze, indistinct targets, hidden targets, smoke, etc., that create the visual environment necessary to duplicate the tactical situation.

It is the combined consensus of opinion of the Link study team members who fired the main gun during the familiarization conference at targets located at a range of about 1200 meters on a somewhat hazy day, that even at that relatively close range, they could not clearly distinguish the target tank outline in the sights. A review of several tanks at that time on the gunnery range found all sights dirty, some misaligned, and only a few which gave clear and distinct images.

The requirement for 5 or 6 elements across the image amounts to 9 to 11 arc-minutes per line-pair required in the optical instruments.

Since these figures exceed the peak eye sensitivity of 6 arc-minutes per line-pair, the minimum MTF at the resolution limit must exceed 5%. Therefore, the image being displayed will have to have a contrast difference of at least 10% to be detected.

8.1.5 Resolution and Field of View Requirements Summary. A summary of the resolution and field of view requirements is presented in Table 8-9.

TABLE 8-9 RESOLUTION AND FIELD OF VIEW REQUIREMENTS

Field of View:	..k Commander heads up:	±90	Horizontal	
	:	±30	, -25	Vertical
	Driver :	±40	Horizontal	
	:	±30	, -15	Vertical
	Power Instrument:	Same as Real-World		
Resolution:				
	Unity Views:	10	arc-minute/lp	
	Power Instruments:	9 to 11 arc-minute/lp		
Modulation:	Image Must Have Greater than 10% contrast difference at limiting values. (This relates to 5% MTF).			

8.1.6 System Complexity Considerations. Visual system complexity will have a major bearing upon the reliability and life cycle cost of the FCIS-LM device. Generally speaking, the more complex the system, the lower the relia-

bility and the higher the operating costs. Therefore, one of the design objectives in the visual study effort is to configure a system with the least complexity that will achieve the simulation and hardware performance goals established. Obviously, a system that exceeds the performance requirements that are established in this section will result in excess complexity without significantly increasing the transfer of training from the simulator to the tank.

8.1.7 Hardware Considerations. Visual presentation by television systems has one surprising aspect: no matter what the scheme of image generation, the resultant system resolutions are comparable on a per-channel basis. Any system using a camera for an input will be able to operate a 1000-line system with a Kell factor of 0.7. This results in a normal 3 x 4 aspect ratio with 700 lines per picture height, or more precisely, Link Digital Image Generators operate on a slightly lower line rate of 875 total lines, or 816 active lines, by 1024 elements horizontally (they also assume a 0.7 Kell factor). Thus the required resolution and field of view performance primarily influence the channel requirements of the display system, regardless of the system used for image generation. The digital image system has a potential advantage as its modulation outout can be made much higher than the camera system, causing the display sharpness to be the primary limiting factor.

However, the digital image system does carry the burden of transforming the flat image plane to a spherical surface, so that the center resolution is degraded below the expected resolution discussed above. This added resolution limitation is discussed further in later sections, but is proportional to the tangent of one half the field angle. This transformation, while complexing the problem slightly, does not change the scope of the analysis performed at this level. The detail requirements of each of the systems will be discussed later on in the appropriate sections.

Since the selection of the image generator does not influence the number of channels required for the total visual system, any analysis of the required resolution can be confined to single channel considerations. This analysis does not take any channel switching or other channel saving techniques into account, but only accounts for the general visual requirement as if all devices were operative simultaneously and independently, and in fact will only provide the first level of analysis required for the per-channel capacity.

Tradeoffs can be made in any visual system on how to distribute the required information. For instance, if very high resolution is necessary, then the channel capacity of 620 x 808 elements (average values of two candidate image generation systems) would provide only a very small field of view and consequently the system would require multiple channels to cover the total field of view desired. On the other hand, if a very coarse system were adequate, then only one channel could provide the information for the entire field of view. The FCIS visual requirements are for approximately 10 arc-minutes per line pair, or 5 arc-minutes per element, at a 10% image modulation value. Using the average per channel resolution capacity of 620 x 808 results in a per channel coverage of

(620 lines x 808 elements) x 5 arc minutes = 3100 x 4040 minutes, or 51.66 x 67.3 degrees.

Thus, a system using 4 channels of information could provide a display at least 180° wide by 60° high, meeting the FCIS-LM requirements for training purposes. Therefore, the per-channel capacity of the image display system should be between 45° x 60° and 52° x 67°, depending on other factors that are involved, such as contrast, etc. If the FCIS-LM total field of view requirement exceeds that provided by 4 channels of the stated capacity by a significant amount (20% or more), then additional image generation channels are required in order to avoid serious limitations in training value. Or, if this approach exceeds the life-cycle cost goals, then a system with reduced fields of view or reduced resolution must be configured so as to minimize the impact on training.

What all this is saying, is that it is possible to provide just so much visual scene information per unit cost. This information may be presented in terms of high field of view, or high resolution. If both are required, then the system complexity and the unit cost increase sharply, thereby exceeding the desired trainer cost and reliability goals.

The major portion of the FCIS-LM visual study has been devoted to making the best possible compromise that is consistent with the required training objectives in this very area.

8.1.8 Visual Performance Goals. Based upon the preceding, a list of major performance goals may now be determined (see table 8-10). Additional factors appearing in this list, and not discussed so far, result from previous experience by Link in the design of many other visual systems.

TABLE 8-10 MINIMUM VISUAL PERFORMANCE GOALS

FIELD OF VIEW: (minimum)

- o Commander, Out of Hatch:

  ± 90° Horizontal Centered On Main Gun

  +30° , -25° Vertical

- o Loader; Out of Hatch

  Same as Commander

- o Driver, Out of Hatch

  ±40° Horizontal

  +30°, -15° Vertical

- o Optical Instruments:

  Same as Real World

RESOLUTION: (minimum)

- o All Unity-Power Scenes:

  10 Arc Minutes Per Line Pair

- o All Optical Instruments:

  11 arc-minutes per line pair, to the eye at specified magnification.

IMAGE MODULATION: (5% at Design Limit)

- o Unity View: Tank at 860 Meter Ranges
- o Optical Instrument: Tank at 3000 Meters Clear visibility.

SIGNAL-TO-NOISE RATIO : 32db Minimum, 38db Desired

REGISTRATION: 0.1% Center, 0.5% Overall

ADDITIONAL OUT OF HATCH OBJECTIVES:

- o Mosaiced Display With No Separation

- No Image Distortion
- Separate Imagery Eyepoints for Commander and Driver
- Brightness: At Least 3 Foot-Lamberts

ADDITIONAL OPTICAL OBJECTIVES:

- Same Freedom to View as on the Tank
- Available Any Time Trainer Desires to Use Them

SCENE CONTENT: (minimum requirement)

- Rural Scenes
- Village Scenes
- Open or Wooded Areas
- Image Density, Adequate For Camouflage
- Level and Hill Terrain Mixture
- Varied Routes Through Terrain, To Avoid Trainee Memorization
- Adequate Detail for Range Estimation
- Ground Texture Cues to Indicate Softness or Stability
- Textured Cues to Slope of Terrain
- NBC Warning Signs
- 10 Target Images, Movable and Recognizable Types

TARGET IMAGE CHARACTERISTICS:

- Accuracy of Location for Range Card Firing
- Realistic Attitudes in Terrain
- Occultation by Foreground Detail
- Occultation of Background Detail
- Correct 'Hit' Effects
- Precise Correlation With Fire Control Indications

SPECIAL EFFECTS:

- o Illumination: Day and Night (Variations)
- o Weather: Haze, Fog, Rain, Heat Shimmer, Snow/Ice
- o Threat Effects: Smoke, Dust, Glint

WEAPON EFFECTS:

- o Tracers, Main Gun and Machine Guns
- o Tracer Penetration and Richochet Effects
- o Burst on Target
- o Firing Flash - Threat and Own Tank
- o Main Gun Smoke
- o Smoke Grenades

EXPERIMENTAL FEATURES:

- o Variable Target Density (Increased Brightness)
- o Enhanced Threat Effects: Smoke, Glint, Etc.
- o Enhanced Weapon Effects: Hits and Misses

8.1.9 Training Considerations. The performance and hardware goals, established so far, meet a level of training that can be best categorized as Crew Tactical Decision and Procedures training, as described in section 8.1.2. A higher level of training would require two or three times the resolution tabulated in table 8-9. An eye-limited system would be 5 times finer. The field of view of each channel has 764 x 573 elements, after kell considerations, so, to gain an increase of 2 or 3 times in resolution would require the field of view to be reduced by the same factor. This would yield image segments of 28° x 36° . Covering the same total field of view would then require 4 to 9 times the channels. This would greatly increase costs and lower the reliability.

Another alternative would be to reduce the required field-of-view. However, this would preclude the effectiveness of the training in terrain appreciation and the engagement of air threats. These alternatives represent undesireable tradeoffs and would seriously degrade the value of the FCIS-LM device.

The field of view of the optical instruments is the same as tank hardware but at reduced resolution. The apparent resolution is the same as the main scene; that is, the increase in detail is proportional to the magnification. Resolution of 3 or more times as great would only help in the discrimin-

ation task which is most economically accomplished with real hardware located in actual terrain. This training can be done from a jeep or similar vehicle driving through a course with target vehicles set about the course.

Full crew interactive training can be achieved with present state-of-the-art hardware, and the design approach to achieving this objective is formulated in the sections covering the following subjects:

8.2	Image Generation	Design Approaches
8.3	Display Input	
8.4	Display Viewing	
8.5	Tradeoff Analysis and System Selection	
8.6	Development of Selected Approach	
8.7	Additional System Performance Considerations	
8.8	System Flexibility	

8.2 Image Generation

8.2.1 Design Approaches. Adequate training of M60A3 crews requires that a number of diverse visual scenes be presented in the FCIS-LM device. These scenes, which must be presented simultaneously for a number of eyepoints, differ in content and also in the actual nature of the image. Scene content requirements have already been discussed and are indicated as a portion of Table 8-10. In general, they include both summer and winter scenes, day and nightime scenes, and country and village scenes; all with varying degrees of weather effects, a wide variety of terrain types. and a multitude of dynamic targets. Differences in the nature of the simulated views, and the number required are equally important in the determination of the proper image generator. Requirements in this area include both wide and narrow fields of view, 3 closely spaced eyepoints, 4 different, yet simultaneous lines of sight, and magnified imagery to simulate optical devices and powered instruments. Finally, there are additional requirements which any image generator must meet. These include the capability to allow complete freedom of movement throughout the simulated terrain by both the "own tank" and the targets, the ability to feed terrain data back to the visual dynamics , and also the ability to provide the special effects associated with weapons.

Three types of image generators were investigated for providing these capabilities:

a. Camera/Model Systems

b. Film-Based Systems

c. Digital Image Generators

8.2.1.1 Camera/Model Systems. When the requirements for field-of-view, resolution and gaming area fall within the capabilities of camera/model systems, this type of image generation provides the most realistic portrayal of terrain by virtue of its high content of image detail. Its major image generation components (in conventional systems) include; a) a scale model of the terrain area, b) a bank of lights to illuminate the model, c) an optical probe which collects light from the point in the model space corresponding to the simulated observer's eyepoint, and which optically relays an image to, d) a CCTV camera, and e) a gantry to position the probe and camera assembly to collect light from the correct eyepoint.

In camera/model systems recently designed and built by Link, the models have been 24 feet high by 56 feet wide, standing on edge in the vertical plane. This orientation has distinct advantages not only for model and light bank access and floor space considerations, but it also allows the gantry beam, which carries the probe and camera across the width of the model, to be vertical, thus minimizing bending moments on its structure. This gantry 'tower' rolls on a horizontal track rigidly anchored to the floor. Thus, without further gantry development only model widths up to 24 feet are available. In principle, the model lengths can be made arbitrarily long (simply by laying more track for the gantry), but to date, customer space limitations have held model length to 64 feet. Scale factors as high as 2000:1 have been employed for models used for aircraft simulation; however, with the close-range viewing of terrain which FCIS must provide, scale factors in the range of 100:1 to 300:1 are more appropriate. This results in either very large models or curtailed gaming areas (a 2 Km by 4 Km area simulated by a 24' x 48' model requires a 273:1 scale factor). A portion of the system normally included with the model is the cultural lighting system. This is accomplished by the use of fine optical fibers. One end of each fiber protrudes slightly above the model whenever a light is desired. The other ends of the fibers are grouped into a bundle and each bundle goes to a light box, in which a lens collects light from a high-intensity light and feeds it into the input ends of the bundle.

A major problem of concern to the designer of the probe is depth of focus. When dealing with object distances of a few millimeters, 'stopping down' to enhance depth and focus brings one to the point at which the pupil is not sufficiently larger than the wavelengths of visible light to avoid significant resolution degradation at all object distances as a result of diffraction. An optimum pupil size can be found for which, at the most severe defocus condition, the geometrical blur circle diameter (which is proportional to aperture) is equal to the magnitude of the diffraction blur diameter (which is inversely proportional to pupil diameter). The

optimum depends on the viewing ranges required and the resolution of the display that the camera model system will be driving. In practice, the optimum pupil diameter falls in the range of 0.2 to 1.0 mm. Very intense model lighting is required to collect enough light for good camera signal-to-noise ratios, particularly at the lower end of the above range of aperture size.

As an example: With 0.5 mm pupil diameter and a scale factor of 100:1, with the point of best focus set 40 scale feet (4 feet 8 inches) in front of the eyepoint, focus will be equally degraded at the horizon (infinity) and at 20 scale feet, where the geometrical blur diameter (a rough measure of resolution in defocused conditions) will subtend 14 arc minutes. For a scale factor of 273:1, with the above focus settings, the blur circle diameter is multiplied by 2.73. Alternatively the point of focus could be moved out to 40 x 2.73 = 109.2 scale feet, giving 14 arc minutes resolution at the extremes of infinity and (109.2)/2 = 54.6 scale feet. The results at 100:1 are higher quality - however, in the above model size example, the 2 Km x 4 Km gaming area would have to be reduced by a factor of 2.73 in both dimensions, or the model size similary increased. In cases where one can predict the object distance to the region in object space that is most important to have "in focus", a computer driven servo can focus the probe at the appropriate object distance. However, this is not really a solution, but just an attempt to minimize the impact of an undesirable situation.

In aircraft simulation, a special optical technique is sometimes valuable. Consider a case when an aircraft is approaching or standing on a runway and it is desired to have the runway in focus, from the very near foreground at the bottom of the pilots window to the end of the runway, a relatively large distance away. With a conventional probe, the plane of best focus in object space is perpendicular to the probe's line of sight, which is typically horizontal. By adding intermediate aerial images to the probe optical layout and tilting the relay lenses, the plane of best focus for a horizontal line of sight, normally vertical, can be transformed to coincide with the plane of the runway. The tangent of the lens tilt angle required to accomplish this transformation is inversely proportional to the probe eye height above the runway. If the scene consists of flat terrain and the flat runway, one obtains the appearance of infinite depth of focus, from the foreground out to the horizon. However, as before, focus degrades for objects extending perpendicularly to the plane of best focus. Although the entire runway is in focus, vertical objects such as towers and poles will appear progressively fuzzier as they rise above the runway. The region of good focus is thinner for more extreme lens tilts (i.e., correction for lower eyepoints). This effect makes the tilting lens (often called Scheimpflug) technique unsuit-

able for close viewing of irregular terrain such as that required for the FCIS-LM device.

The large fields-of-view required for FCIS exceed the capabilities of conventional probe designs which have been built with diagonal fields of up to 120° . In the Orbiter Aeroflight Simulator (OAS) such a field was divided at the image plane and sent to three different camera chains. The center channel had superior resolution (6 arc-minutes) compared to the other two channels (9 arc-minutes) which were well off axis for the objective lens. Other similar schemes include superposing the (external) pupils of two or three probes with beam splitters, or placing the pupils closely side-by-side. Both approaches are hampered by problems with mechanical interference between the optical components. Beam splitters have the disadvantage of light loss. Displaced pupils do not exactly match each other with respect to image perspective. Two wide-angle camera model systems, with identically registered models (painstaking and expensive), such as were used in the Device 2B33 helicopter simulator, could cover a horizontal field in excess of 180° .

Since it is planned to center the horizontal field of view presented in the commander-gunner-loader display about the azimuth of the main gun as it rotates with the turret, while the driver's display is centered on the vehicle's direction of forward travel, a separate camera model system is required to accommodate the driver's different line of sight unless a probe becomes available with a 360° horizontal field. This now brings the count to three camera model systems: One for the driver (not two, since the driver's field of view requirement is less than the 130° a probe can provide) and two to provide imagery to the commander-gunner-loader display, where the required field of greater than 180° exceeds standard probe capabilities. Three camera model systems per simulator represents a rather heavy cost burden, not only in themselves but also in facility requirements.

The signal-to-noise ratio in the camera is limited by the small amount of light the camera can collect from even brightly lit models through the small pupils required to minimize the depth of focus problem. Attempts to increase the illumination significantly beyond 10,000 foot-candles results in damage to the model due to resultant high temperatures.

The problems of model illumination, signal-to-noise, and model heating are eliminated by laser scanning systems. As yet, no such system is operational in any simulator. The simplest of those uses a probe such as would be used with a

TV camera. A laser beam focused to a point is mechanically scanned by moving mirrors (with a high-speed polygonal mirror spinner for the line scan, and an oscillating galvanometer-driven flat mirror for the frame scan) to scan a raster in the image plane which is normally at the output of the probe, but in the laser system is at the input. The probe refocuses this scan onto the model. Scattered light from the model is picked up by a bank of photomultiplier tubes (PMT's) located where the lights in a model illumination bank would normally be placed. The outputs of these PMT's are electronically summed to produce a video signal. Color is provided by having one-third of the PMT's covered by red filters, combined into a red video channel. Green and blue channels are similarly achieved. Everywhere there is a light source in a normal system, there is a detector in a laser scanning system, and vice versa. For the counterpart of model cultural lights, this means that PMT's would replace light boxes at the normal input end of the optical fibers. This provides control of the cultural lighting video level separately from the general scene video level, by simple electronic means. This solves a problem that is particularly troublesome with conventional systems, namely, signal-to-noise in dusk scenes, normally produced by reducing light bank output.

The laser scanning system still has the probe design problems of a conventional camera model system. Two laser scan systems, which are highly developmental, provide much wider fields of view than are currently available. The NTEC Annular Visual System is an optical design with a vertical axis of symmetry which transforms radial scans in an input image plane to vertical scans (lines of longitude) at the output. As the radial input line scan is rotated in azimuth, the output rotates in azimuth. With proper development of a mechanical scanner to scan the input image plane, the system will scan 60° vertical by 360° horizontal. A similar scanner could scan the display screen. As yet, only the optical portion of this system is operational. Another system, the American Airlines laser scanning system, is under development. This scans the model with vertical lines. The frame scan in azimuth is accomplished by a spinner with a vertical axis, which is at the exit end of the scanner, without intervening optics. Both of these last two systems have the disadvantage of requiring that vehicle pitch and roll must be introduced at the display, so that, unless extra field-of-view is provided, the field-of-view limits are not fixed with respect to the simulated vehicle.

The expense and time-lag of development, and the technical risk, make all the laser scanning systems an inappropriate choice for FCIS. In addition, their advantages are obtained at the cost of foregoing the conventional camera's capability of raster mapping, due to the mechanical scanning of laser systems.

Any camera model system has a problem when it comes to the narrow-field powered optics, for reasons of resolution (since the probe can barely do well enough, in arc-minutes, for the background image). Other image generators must be considered for these visual systems if a camera model system is selected for the background image system.

8.2.1.2 Camera Model Plus Film Systems. An attempt was made to configure a camera model system, supplemented with film imagery to alleviate the limiting factors of an all camera model system. First, a scheme to overcome model board size effects was considered by adding scene extenders (24 inch wide mirrors mounted perpendicular to the model board surface at the model edges) to give the impression of unlimited terrain. However, this scheme does nothing for the problems of adding dynamic targets in the simulated scene, line of sight inaccuracies, or map correlation, and so it was rejected. A second approach, making use of film strip images made to appear as though surrounding the model, was considered. The model board would be designed to make it appear to be a part of the photographic scene when viewed from a point within the model. This approach appeared good from the fixed design position, but any motion of the observer from this position will reveal that the film is simply a film and therefore a single image plane. If the trees and or hills were in single lines, an impression of depth in the film model could be obtained by placing additional film images behind the first one. These additional film images could be moved in such a fashion so as to achieve proper perspective motion and occultation changes as a function of observer position. If this were done on a point by point basis on the films, and there was no image information between the rows of trees or hills, an excellent simulation of three dimensional scenes might be obtained. However, it does not appear practical to do this on a point by point basis; moreover it would probably be unnecessary, since simple motion of the films relative to each other may provide adequate eyepoint perspective simulation. Since both the film image and the model image would be in TV format, it would be technically feasible to insert target images anywhere within the film scene area with proper occlusion. This approach precludes placing the targets with the desired positional and motion freedom inside of the model area - an undesirable constraint.

This approach does help to reduce the target insertion and range limitations of a stand-alone camera model system but does nothing for multiple eyepoint, or infra-red appearance, map correlation, target position accuracy or multiple instrument line-of-sight and magnification problems, nor for the simulator signal interface (terrain and range feedback) limitations of the basic camera model approach. Additional film sections designed for high-power and/or infrared and

low-light-level TV image simulation might be used for the M60A3 optical instruments, without the use of the model board. This approach also restricts the line-of-sight and target motion freedom.

In summary, while such a system might well be configured, the simulated fidelity, accuracy of target location for weapon firing and simulator interface performance would not be acceptable to meet FCIS-LM requirements.

8.2.1.3 Camera/Model plus Digital Image Generation Systems. The objectives of this approach are to provide a high degree of realistic image detail for the driver and the tank commander, as well as to provide for as many as possible of the other image generation requirements.

The approach considers the use of a camera/model system as the basic image generator for the driver and for the foreground of the tank commander's and gunner's out of the hatch scenes. As noted previously, significant limitations of the camera/model approach are its inability to provide simultaneously, the different fields of view and different eyepoints, without the use of multiple systems.

It seems logical, therefore, to consider a composite system using the camera model and DIG image generation systems, to provide the best features of each. For the out of the hatch scenes it would be desireable to provide three separate eyepoints, for the tank commander, loader and driver, and for each of them a field of view which may range from 90° to 100° initially, with growth potential up to 360° . The widest angle probe available for camera model systems which has proven to be effective in practice provides only 120° . Probes with fields of view up to 360° and even probes capable of providing two levels of eyepoint have been proposed, but never reduced to practice. The 360° laser scan probes are not compatible with DIG generated systems, since they are not adaptable for standard mappable camera functions. Because of the risk and cost of designing and developing a 360° probe, it is recommended that a single 120° probe be used for the initial laboratory model of the FCIS. If the combined camera model and DIG system approach should seriously be considered and appears desireable after evaluation of the system, effort could be undertaken to design and prove a wider field of view probe.

There is no apparent solution to the multiple eyepoint problem outside of using multiple models; however this obviously is too costly. Therefore, a selectable eyepoint compromise approach will be considered for this configuration. If we restrict the design to only one probe and model board, we must use DIG for the tank's optical systems imagery, except for the 1X periscope displays for which we can use part of the out-of-the-hatch imagery. To achieve the desired scene continuity and consistency of image appearance, the model board would be configured to appear as DIG imagery. The DIG image content for immediate foreground objects would be replaced with camera model details, texture and color, etc. In other words the DIG imagery would be a skeleton over which is laid the flesh and skin of the camera model type imagery. Thus, when a given section of the model board terrain is viewed close-up, the image would appear with the texture and details of a camera model system. When the same area is

viewed at a distance, the details and texture of the same model board area would not be visible. It could, therefore, be replaced with a DIG image generator with no loss of information. The transition from camera model to DIG imagery would be under control of the DIG-generated software program. It is the intent that the image be scanned from the nadir towards and above the horizon with the lower portion of image being developed from the camera model input and the remainder being developed from the DIG image base. By this method the effective size of the tactical area could be increased as large as desired, recognizing, however, that the maneuvering area would be restricted to a little less than that provided by the camera model imagery, that is, about two kilometers by two kilometers.

Since the high-power optics of the tanks are primarily concerned with more distant objects or scenes, the DIG imagery would be used entirely for these devices. It would also be used for all scenes requiring reticles, weapon effects, and visibility functions. Since DIG will generate both the target information and the reticles, high system accuracy will be assured for all firing operations.

If the laser-type camera model probe and DIG combinations were considered at some future date, the major advantage would be to provide increased fields of view. However, there may be problems integrating the two approaches into a common system development of the DIG to provide the speed of operation and timing of the laser. This problem could be solved with some development effort.However, DIG imagery is produced on a plane rather than a cylinder or sphere which the laser systems appear to do, since they scan around a vertical axis of rotation. The DIG system scan lines could be made to trace the equally spaced meridian scan lines of the laser system, but since the DIG data is basically computed for a flat image plane, the image would suffer from curvilinear distortion when projected onto a cylinder or sphere. There is no obvious solution to this problem aside from the use of scan converters at great expense.

The 'switch' between the camera model and the DIG system could be provided either by chroma keying, in which the camera/model signal has priority and releases it to the DIG when a saturated selected color is picked up, or, the DIG has priority and provides a 'switch' signal whenever it releases control. The DIG control method would be preferred since it also works for targets, which cannot be preprogrammed into the camera model system.

Image correlation could be a problem, but its effects could be minimized by distributing system errors so that good overall system performance is obtained. It would be important that all target, weapon effects, reticles, burst on target, and similar images be generated by the DIG so that scene

consistency and weapons accuracy, when used in the control fire/mode, would be achieved.

The only other image correlation problem concerns the accuracy of target location. This is important for terrain/target occultation requirements. It would require that the detail of the terrain image which does the occulting should also be provided by the DIG image source. This would provide some constraints in the freedom in which the target may be moved and still provide occulting of the target, since it was the intent to provide more image detail (specifically trees, bushes, small structures, and so forth) on the model board, than would be provided within the DIG model.

To provide the necessary accuracy of the overlay of the camera model raster over the DIG raster, it will be necessary to control the position of the camera raster, relative to the DIG raster, by closed-loop techniques. This would be an extension of the technique used for registering multiple rasters of a three-channel display system. It would also be necessary to provide very good linearity and mapping within the camera system as well as some method of assuring very accurate line of sight positioning so that the line of sight positioning of the camera would be identical to that of the DIG system. This is probably one of the most challenging parts of the design. It probably would require registering some specific scene element of the camera model system with a corresponding scene element within the DIG image. While difficult, it appears such a system could be made operational.

Except for the condition of trying to occult a portion of the tank by details which would appear in the foreground, the problem of insetting and correlation of the images is not severe. The camera model video would be replaced by the DIG video only when the DIG control signal indicates that a transition is required; likewise, for the transition between the top of the camera model imagery and the beginning of the DIG imagery, it would be feasible to provide overlapping imagery such that exact correlation would not be required. The need for horizontal continuity between the two images would still be present so that the aforementioned raster registration methods or technique would be required.

8.2.1.4 Film-Based Systems. Color film has many attributes that make it attractive to simulation applications. It is capable of providing a most realistic appearance as well as a wide field of view (FOV). Also, it has, by far, the greatest image density, providing scenes that may readily be related to maps and aerial photographs, and supplying all information required for route selection. Slide, cine, and strip films are currently used by simulation systems manufacturers. These film types have been used in a wide variety of applications designed to maximize advantages while minimizing in-

herent limitations. Among the earliest applications were those that used cine films because of the wide field of view capability. When used for aircraft flight training and aircraft performance evaluation, these applications took full advantage of cine film's capacity to encompass a wider field of view that permitted the simulation of heading changes over an angle equal to the undisplayed FOV. In some applications, film imagery was anamorphically stretched along one axis before it was displayed. This stretching effected an apparent eyepoint shift in response to trainee action. However, this approach can be used only when there are no vertical scene elements, as they become tilted in the anamorphic process. This system mitigated one of the basic constraints of film for simulation purposes, which is the inability of the simulated eyepoint to depart from the film-taking motion path in the terrain. This limitation rules out use of film for the image source of FCIS-LM visual scenes, because of the requirement for the driver to select what he thinks is the best route for tank movement. The 'canned' film route would deprive him of the decision-making function, and may even prove to provide negative training. For very limited route selection, it would be feasible to consider switching between films at pre-determined locations. This technique is similar to railroad switching points between two rail paths, where each path would correspond to a given film section. However, when the variation in eyepoint effects due to only limited movement is considered, it becomes obvious that it would be impractical to provide enough switching points to provide the freedom in route selection needed for effective training of the M60A3 crew.

When strip films are used, the viewer (simulated eyepoint) is quite far from the visual scene recorded on the film. In these instances, some eyepoint translation can be simulated for limited excursions. This approach might be applicable if the selected terrain had only nondistinctive low vegetation between the film-taking camera and a tree-lined horizon, since strip films will not correctly show imagery ahead of the main plane being photographed. It is feasible to add further film strips to portray other tree lines between gaps in the first set of trees. This approach is restrictive because it limits the variety of terrain and scenery that may be displayed and would not permit showing nearby trees or brush which are required for training the tank driver in the seeking of tank cover and which likewise are needed to provide concealed target situations. It would, of course, not be able to depict villages, bridges or highways, or any severe terrain features. The approach does appear attractive however, and could be workable if it were married to a camera/model system to provide more realistic foreground imagery. Such a combination would suffer from the differences in texture and image appearance between the foreground (camera/model image) and the background (film imagery).

To date, there is no system in the film domain that will provide the route selection freedom necessary for the FCIS-LM application. If such a scheme should be developed, the film approach should be reconsidered because many of the problems previously associated with film, such as film transport mechanism reliability and the insertion of moving targets with occultation,have been partially solved. Other remaining problems, such as positional accuracy and methods of determining laser ranges,may be provided with limited success by relating the film imagery to positions on topographical maps overlaid on orthophotos. Those points may then be digitized and stored in computer memory for later use.

Even if all of the problems associated with film-based systems could be successfully worked around, the application of film to provide FCIS-LM image sources would be both difficult and costly. For this reason film-based systems will not be considered any further.

8.2.1.5 Digital Image Generation (DIG). Digital image generating equipment is currently being employed for most of the visual attachments to aircraft simulators presently being designed and built by Link. In DIG systems, all of the features in the visual scene are digitally modeled in three dimensions and then stored on a mass storage medium for access during real time-processing. The processing function in the DIG transforms the three-dimensional digital models into a two-dimensional representation with the correct perspective for display by projectors or CRT's.

The digital nature of DIG permits a great deal of flexibility in the modeling of the data base and in its subsequent display. DIG allows the observer to move anywhere throughout the gaming area and view along any line of sight with any field of view while at the same time keeping the entire image in proper perspective and focus. Both wide and narrow fields of view are easily attainable. Fixed and moving objects, both properly occulted, can be generated, and a wide variety of special effects are also attainable. Most of the problems associated with film-based and camera model systems are not present in the DIG.

However, the DIG does introduce some new problems, the most important of which is the limited edge processing capacity of the system. Since the image is generated digitally by means of mathematical transformations, the number of computations which can be performed and the number of edges which can be generated is limited by the amount of time available for processing. The Link DIG is capable of generating 10,125 potentially visible edges every thirtieth of a second. This limitation,coupled with the capability of DIG to solve many of the visual simulation problems for the FCIS,must be traded off against the performance of the other image generation approaches.

8.2.1.5.1 Typical Configuration. To properly analyze the performance of DIG for FCIS, some knowledge of its hardware organization and capabilities is required. Figure 8-6 is a block diagram of a typical DIG system. The function of the general purpose computer is to retrieve the 3-dimensional object descriptions from the on-line data base and send these descriptions along with vehicle position and attitude data to the frame calculator for processing.

The frame calculator then performs a number of geometric calculations which project the three dimensional data base onto a two dimensional plane, clip this projected image against the boundaries of the viewing windows, then organizes the resulting images into a list of edges ordered by raster lines.

This list of edges is then transferred to the scanline computer which determines which objects occult other objects, sorts edges from left to right along scanlines, and outputs one line of data at a time to the video generator.

Finally, the video generator takes data from the scanline computer, performs smooth shading computations on designated objects to make them appear rounded in shape, applies visibility effects, removes any objectional quantization effects, and converts the digital data into video signals suitable for use in the display device.

Each of the hardware subsystems does have limited capability in performing the functions which are assigned to it. The first of these system limitations is the processing capacity of the frame calculator.

Within the frame calculator, a number of mathematical computations must be performed for each object that is processed. Vertices must be transformed from data base coordinates to window frame coordinates and then clipped and projected onto the image plane. Back-facing faces, that is, those which are facing away from the observer, must be eliminated and those faces which are retained for processing must be properly illuminated.

Even with the high-speed logic and pipeline architecture employed, the sheer magnitude of the computations to be performed,and the limited frame time available, restrict the number of edges which the system can process. The Link system is limited to 10,125 edges, but some of this capacity time is utilized for overhead operations so that the net yield is a list of approximately 8000 edges which are sent to the scanline computer. The 8000-edge approximation becomes the measure of the complexity of the scene image which can be generated. Of course, more than one frame calculator can be used in an attempt to increase the edge control, but the

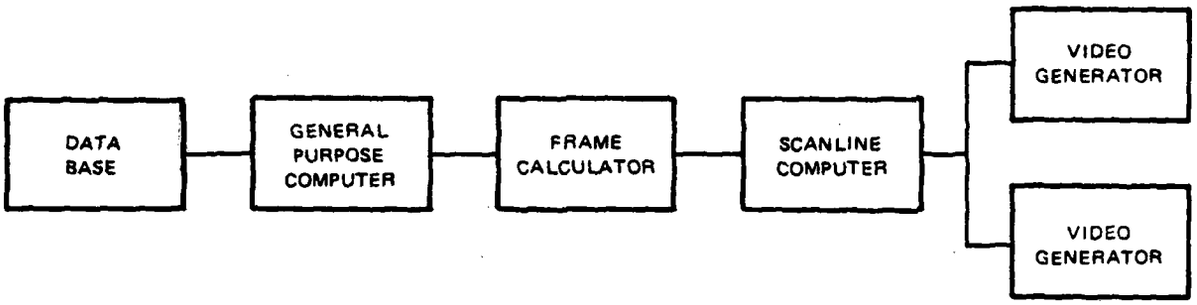

Figure 8-6 Typical DIG System Block Diagram

cost of such a configuration is considerably higher.

A second performance limiting characteristic is associated with the scanline computer, and consists of the number of edge crossings which can appear along one scanline. This number is limited by the fact that the edge crossings must be sorted from left to right to facilitate the conversion from digital to video signals. The time available for this sort is the time it takes to sweep one scanline. This time permits a maximum of 512 intersections for each and every line.

Lastly, the video generator is limited in its capability to output picture elements. Current designs permit picture elements to be output at any rate between 25 and 45 nsec per element. Thirty-seven nsec is the most cost-effective choice, and since the resolution of the system is related to the output rate, the 37-nsec rate is used in analyzing FCID FIG performance.

Table 8-11 summarizes the performance capability of the DIG system considered for the FCIS application.

TABLE 8-11 DIG PERFORMANCE CRITERIA

FRAME CALCULATOR	
- max number of potentially visible edges/frame	10,125
- max number of moving objects in scene simultaneously	10
SCANLINE COMPUTER	
- max number of potentially visible edges/frame	8,196
- max number of edge crossings/scanline	512
VIDEO GENERATOR	
- picture element output rate	37 nsec

8.2.1.5.2 Potential FCIS DIG configuration. As stated in section 7 of this report, the image generator must be capable of providing 4 separate scenes simultaneously.

Those scenes are:

a) Out-the-hatch imagery for the commander and loader.

b) Out-the-hatch, in-the-hatch, or night-image viewing for the driver.

c) A scene for the commander's optical instruments.

d) A scene for the gunner's optical instruments.

Since both the tank commander and the gunner can each look at just a single optical instrument at a time, it is reasonable to assume that one video generator can be assigned to each man's optical instruments and that sensors or micro switches in the eyepieces or head rests would serve to indicate which device the man was using. Thus,two video generators would be allocated to the optical instruments, as shown in Figure 8-7.

The driver station is serviced by two video generators, each of which drives a projection device. Four additional video generators are dedicated to the commander and loader out-the-hatch scenes. The resulting system would appear as shown in Figure 8-8.

An alternate configuration, one which would significantly lower the cost and increase the MTBF, but reduce the resolution of the system, was also investigated. In this alternate configuration, each video generator would be used to drive 2 display devices; consequently the number of video generators would be reduced.

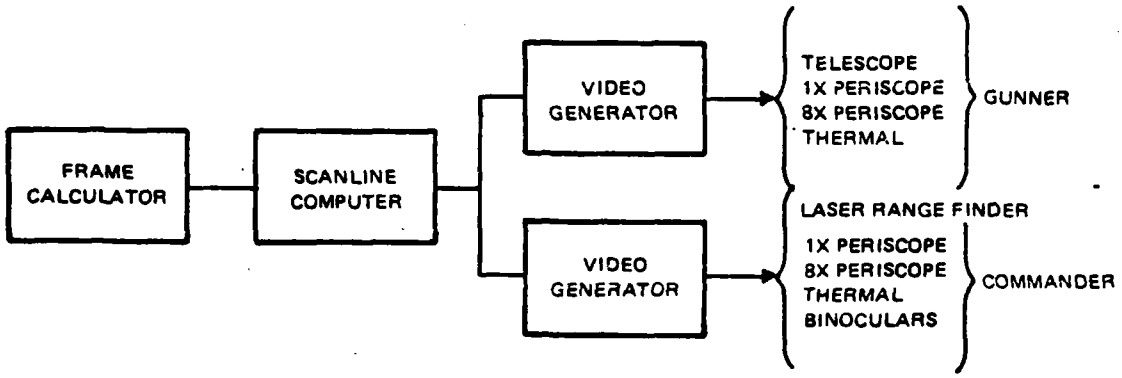

Figure 8-7 Optical Instrument Scene Generation Scheme

The rationale supporting this configuration is that when one video generator is configured to drive a single display device, the video generator remains idle whenever that display is in horizontal retrace. The amount of time spent in retrace is, of course, a function of the number of lines in the display. However, if one video generator was configured to drive two displays in such a way that while one display was in retrace, the video generator could be outputting data to the other display, full utilization of the video generator would be attained. By operating the video generator at 100% capacity, more elements are available for display and it is possible that the additional picture elements would be sufficient to drive both displays with degraded, yet acceptable, resolution.

Such a scheme is shown in Figure 8-9.

In the first approach, (one video generator for each display) we could anticipate an 85% duty cycle in the video generator. Thus the number of picture elements the DIG could generate would be:

33.3333 msec -15% = 28.333 msec active time
28.333 msec/37 nsec/element = 767,765 elements/thirtieth of a second.

Since, in this configuration, two video generators would be used to drive the two display devices, a total of 1,531,530 elements would be available for display.

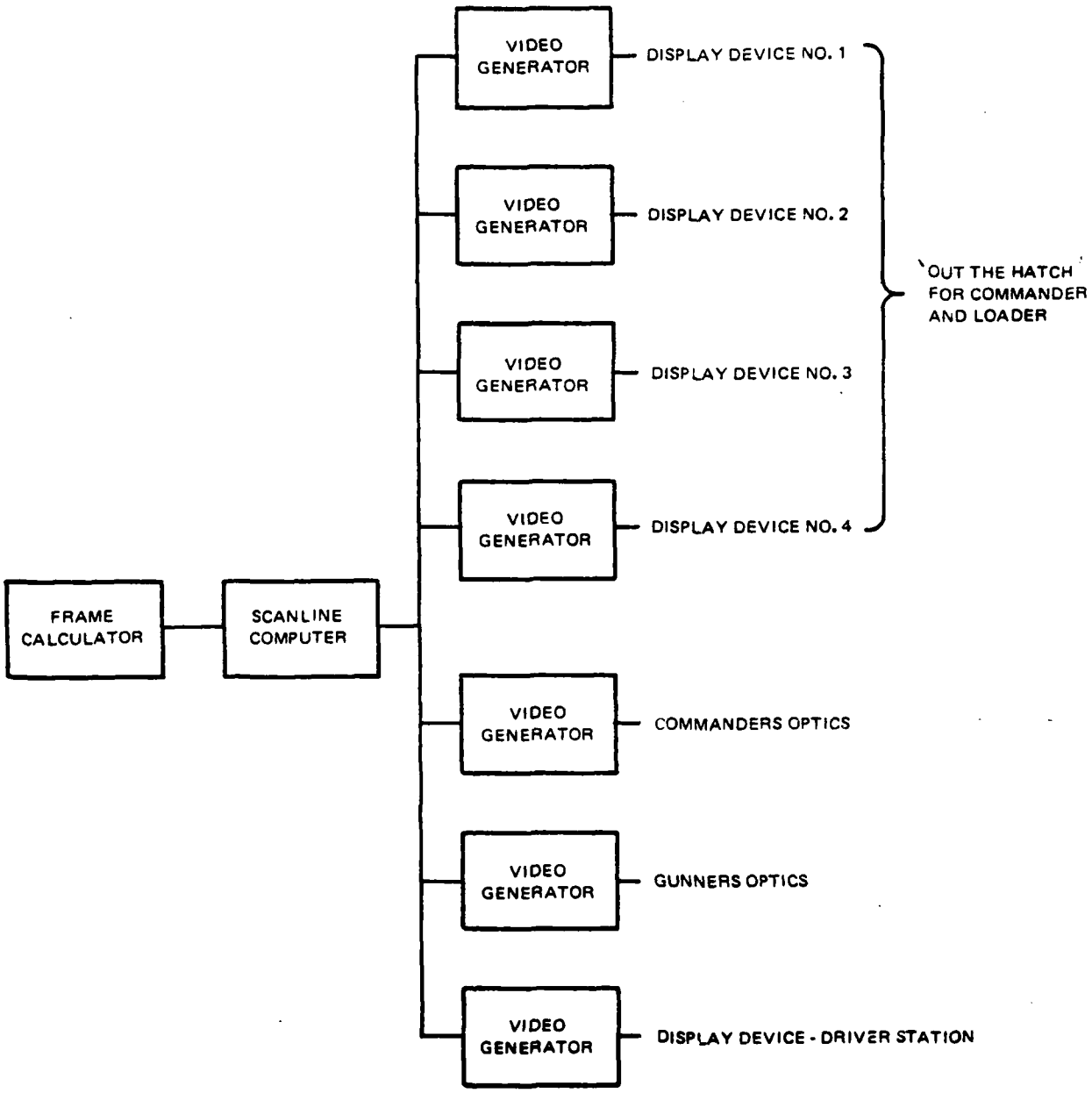

Figure 8-8 Commander/Loader Out of the Hatch Visual Scene Generation Scheme

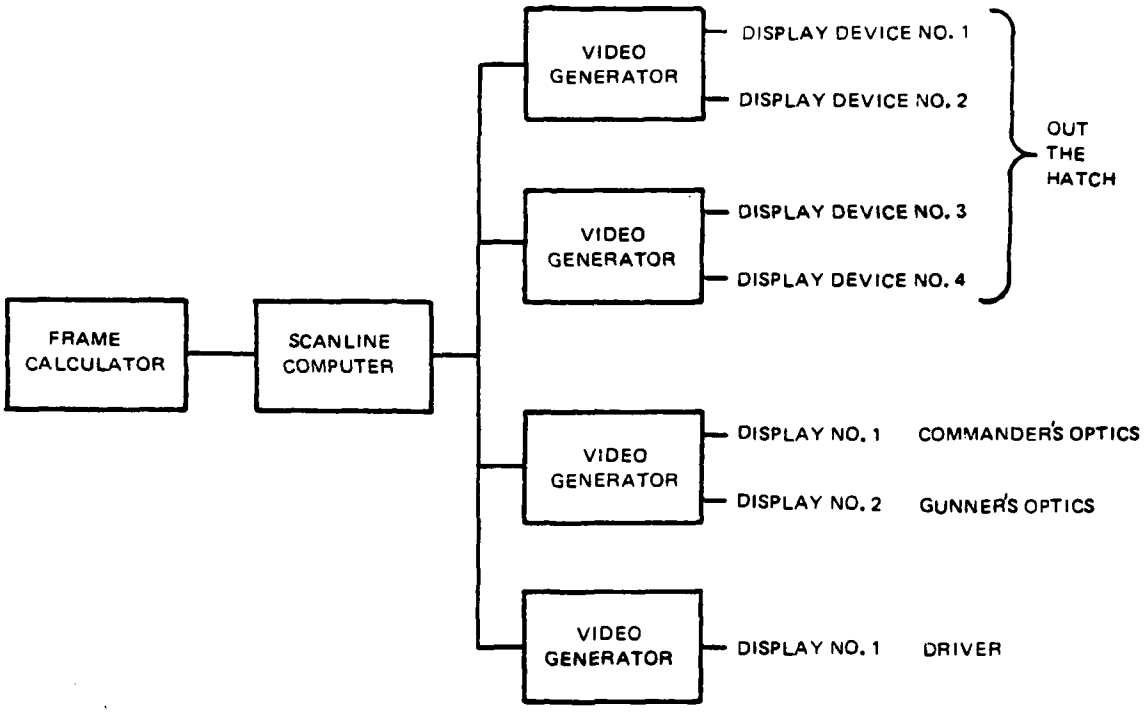

Figure 8-9 Alternate Approach With Reduced Complexity

In the alternate configuration (one video generator driving two display devices) there is no loss of time due to retrace. Therefore, the duty cycle could approach 93%. Thus the number of picture elements generated is:

33.3333 msec -7% = 31 msec active time
31 msec/37 nsec/element = 837,837 elements/frame

Since only one video generator is used, the elements must be spread over two windows. The ratio of picture elements in the alternate configuration to the number of elements in the two-video-generator configuration is

$$\frac{837,837}{1,531,530} = 0.547$$

and since these are spread both horizontally and vertically the resulting reduction is

.547 = 0.739 of the original resolution.

Thus there is a 26% reduction in resolution.

The tradeoff becomes one of cost versus resolution. In the out-the-hatch scenes, increased resolution (two-video-generator scheme) aids in the detection and recognition of targets and the increased performance merits the increase in cost.

Therefore the DIG block diagram for the FCIS would now appear as shown in Figure 8-10.

8.2.1.5.3 DIG Performance Characteristics. Assuming the DIG configuration selected is that presented in Figure 8-10, the performance of the image generator relative to the criteria listed in section 8.1 can be analyzed.

8.2.1.5.4 Video Channels. One of the inherent advantages of the DIG is its capability to reproduce wide fields of view and multiple lines of sight. In the recommended approach, the DIG will simultaneously generate a proper scene from the commander's eyepoint, the driver's eyepoint, and the optical instruments. It will exactly duplicate the FOV of the real-world sensors and the four video generators for out-the-hatch viewing will permit the 180° FOV required for the training problem. The driver's station will be provided with two DIG channels which can be used to simulate the FOV of the front vision block, or can be expanded with lower resolution to provide a wider FOV for experimental purposes.

Additionally, the DIG can easily simulate the various magnification requirements by both limiting the actual FOV which results in increased resolution, and by dynamically adding new objects and detail to the scene which can be normally observed only through the magnified optics.

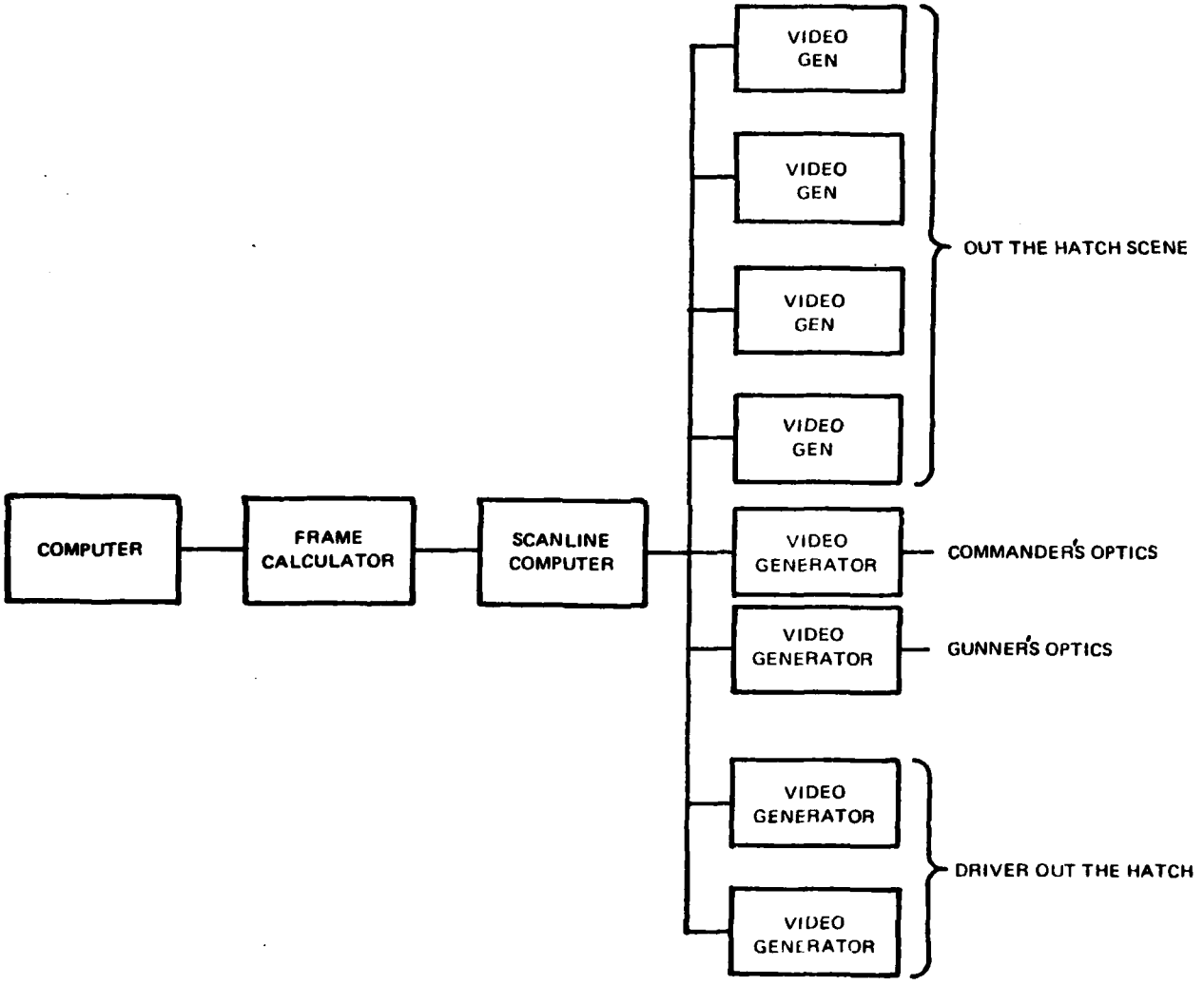

Figure 8-10 DIG Block Diagram-FCIS-LM Configuration

Regardless of the magnification or field of view, the DIG image will always appear in proper perspective and focus.

8.2.1.5.5 Freedom of Motion. Within the DIG data base, which could stretch for miles on a side, the student vehicle will be able to move and look in any direction. At all times the scene will have the proper perspective and will show the proper occlusion of background objects by the foreground. Even enemy tanks will be properly masked or will properly mask both terrain or other vehicles in the scene.

The digital nature of the data base also allows the DIG system to feed precise data back to the vehicle dynamics math model concerning the slope and composition of the terrain on which the vehicle rests. This data can be used to control the dynamics of the vehicle so that it moves properly with respect to the surrounding terrain. The capability of DIG system to provide data, not only on the slope of the terrain, but also on its composition, is an advantage which the DIG has over other image generator types.

The process used to acquire this data is straightforward. For each frame, the vehicle dynamics will specify an X, Y, and Z position for 5 points attached to the tank. For each of these points, the DIG will construct a test point located directly above the X and Y position.

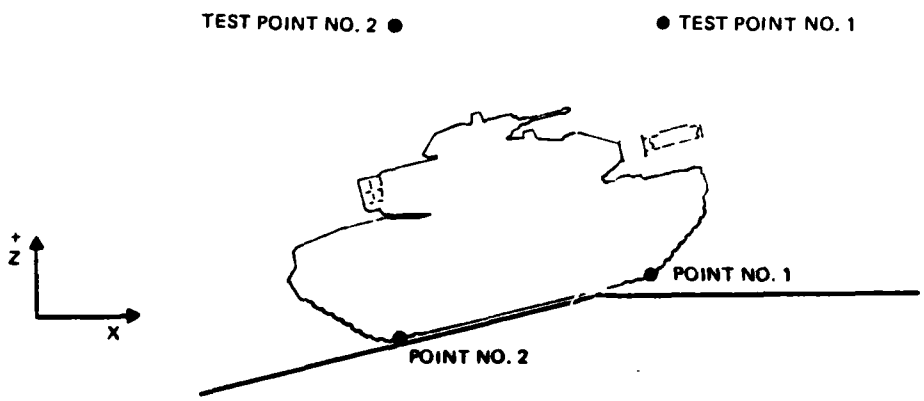

From each test point a line-of-sight vector will be directed along the negative Z axis and the DIG will determine the range from that test point to the terrain feature directly below.

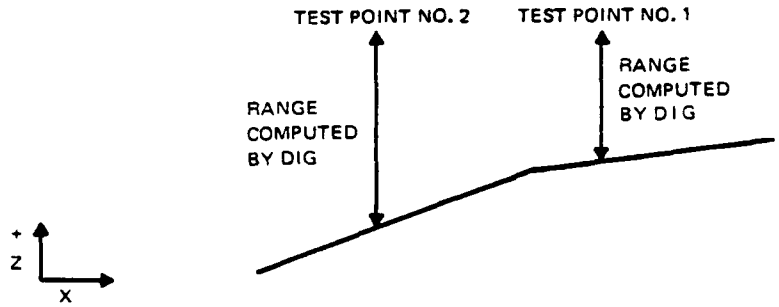

By subtracting the range from the Z-coordinate of the test point, visual software can determine ground elevation under each point.

Additionally, the DIG will identify the data base object and face below each test point. From this data, a code will be retrieved which will be used to identify the surface material and slope of that face. All this data will be returned to the vehicle dynamics system for use in the vehicle dynamics math models.

Since this approach does use some of the edge capacity of the DIG, it should not be used for enemy vehicles. The paths for these vehicles would be generated off-line and then selected by the instructor during the training mission. The vehicles will, however, move over the terrain and their attitude will properly reflect the terrain contours at all times.

8.2.1.5.6 Image Content. The most significant drawback of DIG systems is their limited edge capacity. In the recommended configuration, the DIG will be capable of generating 8000 potentially visible scene edges every frame. The 8000 edges must be distributed over 4 fields-of-view, resulting in approximately 1000 edges per channel in the system.

With this number of edges available in the scene, it will not be possible to simulate areas of dense forests or congested cities, or to provide highly textured foreground scenes. It will be possible, however, to model all of the types of objects specified in Section 7. Both rural and village scenes in summer and winter can be created. The terrain can consist of deserts, rolling hills, or flat plains. Different soil types can be symbolically represented through the use of colors and special texture patterns; various vegetation such as bushes, shrubs and trees can also be represented. More significantly, the DIG can be used to model all types of military vehicles ranging from aircraft to tanks.

It is important to note, however, that the edge limit will prevent the inclusion of all of these objects into the scene simultaneously. Representative scenes may contain sufficient terrain features to relate the scene to a military map, a few groups of trees or bushes and perhaps a small village in the distance. Enemy tanks and aircraft will move freely throughout the scene and can, upon instructor command, fire at the trainee's own tank.

There will be sufficient scene content to conceal enemy threats and sufficient detail to allow the commander to make tactical decisions about the route selection or the engagement of enemy forces. However, the decisions he may make will not really tax his ability to do so, since available areas for concealment or cover will be quite limited.

Although image content is a shortcoming of DIG systems, DIG does have the capability to provide cue supplementation. Since simulated visual systems cannot meet the resolution limits of the eye over such large fields of view, the crew members will not be able to perform the same level of target detection and identification that they can perform in the real world. To aid the crew in the detection process, some sort of cue supplementation will be necessary. This supplementation can take many forms such as glint, smoke puffs, modulation of the target intensity as a function of its range from the observer, etc.All of these supplemental cues can be created within the limitations of the DIG systems.

Using the Johnson criteria for target discrimination ranges, the following ranges can be calculated.

	Range In Meters			
	Detection	Orientation	Recognition	Identification
Fighting Station Out-of-Hatch	1617	1155	404	269
Gunner Periscope	10,196	7,283	2,549	1,699
High Power Laser Range Finder	16,259	11,613	4,064	2,709
Driver Out-of-Hatch	1,463	1,045	365	243

These numbers assume the DIG configuration in Figure 8-10, a 180° FOV at the fighting station, and a 100° FOV at the driver's

station. It is clear from these numbers, that the resolution on the screens is not sufficient by itself to permit target detection and acquisition. However, the use of the high resolution optics in combination with the supplementation techniques does provide effective resolution capabilities.

8.2.1.5.7 On Board Sensor Simulation. Since the DIG controls both the geometry and color of each object in the scene, it is a straightforward task to simulate IR or available light images. When such an image is desired, the DIG would use a special table of colors and intensities to produce the proper scene. Even the scenic effects associated with IR imagery, such as blooming, have been produced by DIG systems on Air Force simulators.

DIG would also be used to generate the reticles in the optical instruments, and by so doing, eliminate the need for reticle projectors. Such an approach would greatly simplify the registration of the reticles with the displayed image, and would allow accurate firing and scoring control. Adjustment of the reticles would be accomplished by placing an encoder at the controls on each of the optical instruments and by positioning the reticles as a function of the data provided by the encoders.

8.2.1.5.8 Simulator Interfaces. One of the major advantages of Digital Image Generation is its ability to interface with other simulation systems in a manner which allows a more effective simulation of the vehicle. The use of DIG as the image generator facilitates the visual system interface

with tactics, vehicle dynamics, and instructor station systems.

8.2.1.5.8.1 Visual/Tactics Interface. The visual/tactics interface can be grouped into three requirement categories:

a) Correlation between the sighting reticles and targets in the scene.

b) Provisions to range on targets in the scene.

c) Correlation between weapon impacts and targets in the scene.

As discussed in section 8.2.1.5.7, reticles in the optical instruments would all be created with DIG line features. Line features have the characteristic that they are always 1 picture element wide, and as such use a minimum of edges. Since the reticles remain constant in their position on the displays (except when the crew member is adjusting, or the ballistics computer is controlling) they can be processed only when they are changed and can be stored semi-permanently in the edgelist to the scanline computer. Thus the edges do not have to be processed through the frame calculator each frame and will not affect the edge processing limit of the frame calculator.

The primary advantage gained by generating the reticles with DIG is the elimination of the need for an external reticle projector such as the XM21 which is in the actual tank. More importantly, it provides exact correlation between the reticles and the generated image. If the reticles were electronically inserted, some mechanism would have to be implemented to ensure that placement of the reticles relative to the scene detail (which is subject to raster drift) accurately reflects the LOS of the sighting instruments. Any error would appear to the crew member as a misalignment of the sighting instrument and the guns.

By using the DIG generated reticles, with no correlation errors, weapon zeroing training can be accomplished, since once the sights are aligned there will be no drift between the sights and the weapon trajectory.

Once a target is sighted in a scene, it is often necessary to determine its range with the laser range finder. Since the location of every vertex in the DIG scene is known to an accuracy of 3/8 inches, and since the visual system can determine the relative occlusion of one target by another, the DIG can accept a LOS vector representative of the laser rangefinder and compute the exact distance to the nearest object along the LOS. This means that the crew member can range on any object in the scene (not just enemy

vehicles) and the range returned will be at least as accurate as that obtained from the operational rangefinder.

Finally, the visual system must be able to 'flag' the tactics system when a target impact has occurred, and be able to identify the type of object which was hit. DIG is also capable of performing this function in the following manner.

The trajectory of the projectile is broken up into a number of segments, each of which can be approximated with a straight line with a specified tolerance error.

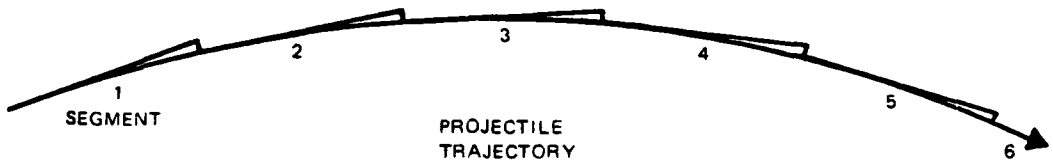

Within each segment, the DIG will treat the straight line approximation as a LOS vector. If any object in the data base intercepts that vector within the proper range, that is the object which will be hit. The location of that object and its identification would be input to the tactics system.

Additionally, at the proper time, the DIG could display weapons effects at the point of contact. The color and shape of the burst would be a function of the type of ammunition and the object which was hit.

Figure 8-11 is a block diagram of the tactics/visual interface.

8.2.1.5.8.2 Visual/Dynamics Interface. Section 8.1.2.5.4 identified the need for the visual/dynamics interface. In general, the DIG will supply data defining both the slope of the land and its composition, to the dynamics math model for the location of the own tank as it moves anywhere within the gaming area.

Placement and movement of enemy tanks will be accomplished off-line. Movement of these vehicles will be limited to pre-selected paths with attitude and velocity corresponding to terrain contours and composition.

8.2.1.5.8.3. Visual/Instructional Systems Interface. The primary advantages of the DIG system is its flexibility. With DIG, the instructor can dynamically position and re-position threat vehicles, control their route selection and velocity, and initiate attacks on the FCIS own tank.

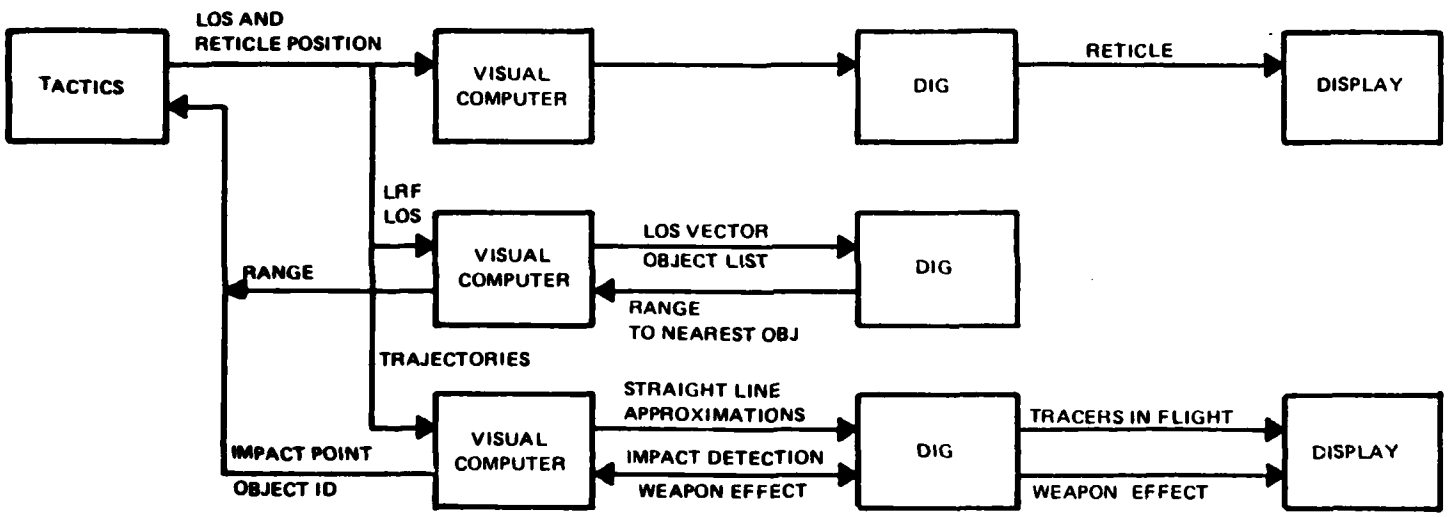

Figure 8-11 DIG Visual/Tactics Interface

DIG will also enable the visual system to alert the instructor whenever a threat vehicle is in view. This data will be used to time student responses and to evaluate student activities and performance.

The use of DIG generated recticles also allows the instructor to see how well the student uses his sighting instruments to lay fire, since visual repeaters of the via scene through the sights will be available at the IOS.

8.2.1.5.9 Digital Image Generation Summary. The primary restraint of the DIG systems is its limited edge processing capacity. It is obviously not possible at this time for DIG to economically create 'photographic-like' images representing actual battlefield scenes and conditions. On the other hand, state of the art DIG systems have demonstrated the capability and flexibility needed for the diverse visual requirements of the FCIS simulation problem. Future DIG development will only enhance its edge generation capacity. Therefore DIG should be considered as the prime candidate for the image generation functions of the FCIS-LM device.

8.2.1.6 Image Generation Summary. Actual film based systems have been found unsatisfactory for the FCIS because of severely limited freedom of movement that prevents effective interactive training of FCIS crew members in important tactical functions. (Route selection, use of cover, etc.). A DIG based system inherently provides full freedom of route selection and viewing direction. Its detail content does not approach the high level of camera/model or film systems, but it is believed adequate for the requirements of the FCIS-LM device. Furthermore, it has distinct advantages in interfacing the visual system with the dynamics computations, and also the tactics and instructional systems. A pure camera/model system would require triplicate systems to provide the necessary fields of view and would have to be supplemented by some other image generator for the powered optical instruments. Camera/model hybrids with film and DIG have also been examined.

The film hybrid was found to be feasible but likely to produce poor simulation fidelity, with undesireable restrictions on viewing position and direction. The DIG hybrid has the potential to meet all requirements and far exceed scene detail requirements, but it presents a challenge to correlate the probe line of sight accurately with the DIG. Also, the drastically different appearances of camera/model imagery in the directly viewed scene and DIG imagery in the optical instruments may severly limit the trainee's ability to correlate identificating scenes made with these two methods of viewing.

Since the only systems we have not eliminated include a DIG (DIG alone or DIG hybrid with camera/model); and a DIG system is adequate by itself; and since it seems an unjustifiable luxury to add the expense of a camera/model system to a DIG; the logical recommendation for an image generation medium must be a DIG system.

8.3 Image Display Input Systems

8.3.1 Design Approaches. Performance characteristics of the display input equipment considered for use during the FCIS system study are shown in Table 8-12. A discussion of the characteristics of each type and their relevance to the FCIS system follows.

8.3.1.1 Oil Deformographic Light Valves. The performance of the oil deformographic light valves built by GE is shown in Tables 8-11 and 8-12. The newest high-resolution high-brightness type PJ 7150 is of special interest of the FCIS since it provides both improved resolution and brightness. Although this device is experimental, the risk factor is low since it is simply an evolution of existing hardware. An important characteristic of the GE light valve is its ability to withstand the motion requirements of the FCIS.

The light valve can be tilted indefinitely at 15° and in some axes even larger angles can be maintained. Under dynamic conditions, the unit can withstand any angle generated by a motion system. There is no change in performance or operating life through these angles. In general, there are no normal FCIS operating conditions that will exceed the specified limits of the light valve.

In "freeze", motion is washed out. However, if the tank is parked on a maximum incline, 15° will be used to simulate it. Only in the failure mode can the fixed angle exceed 15°. If this happens, the projector bottle may be fouled and need replacement (a minor operation).

The light valve will also withstand 4G acceleration without any effect on performance. When loading reaches 20G's, it is possible for hair cracks to develop in the bottle which may allow air to enter and burn the cathode. This, of course, will cause failure but is also far beyond the expected accelerations of the motion system.

The luminous emission of the projector is 500 lumens concentrated in a field that is 18.3° wide by 13.8° high. This is redistributed by final imagery lenses to the format required by the display. The light valve uses a special projector lens with integral schlceren bars and is best not replaced. When different formats are required, it is best done with additional lenses.

Since color is simultaneously generated in both space and time by a single gun, there is no misregistration and no convergence adjustments are required at anytime.

TABLE 8-12 DISPLAY INPUT EQUIPMENT TRADEOFF CONSIDERATIONS

PERFORMANCE CHARACTERISTICS	LIGHT VALVES OIL DEFORMEGRAPHIC MONOCOLOR	3 COLOR	LIQUID CRYSTAL MONOCOLOR	3 COLOR	CRT PROJECTORS 3 COLOR	SHADOWMASK COLOR MONITORS	2 COLOR LARGE CRT MONITOR ASSY	3 COLOR SMALL CRT MONITOR ASSY
OUTPUT LIGHT FLUX, LUMENS	1250	500			500	500		
CHROMANANCE	B&W	3-COLOR	1-COLOR	3-COLOR	3-COLOR	3-COLOR	2-COLOR	3-COLOR
MTF @ LINES @ PIXELS/LINE	40%	59						
VIDEO RASTER FORMAT	3h X 4w	3h X 4w	3h, 4w	3h, 4w	3h, 4w	3h, 4w	3h, 4w	WITHIN CIRCLE
FORMAT MAPPABILITY	VERY LTD WITH MODS	NONE	UNLIMITED WITH MODS	UNLIMITED WITH MODS	UNLIMITED WITH MODS	UNLIMITED/ 3X4 ENV.	UNLIMITED/ 3X4 ENV.	UNLIMITED/ MODS
RASTER SCAN DIRECTION REQ.	FIXED	FIXED	FLEXIBLE	FLEXIBLE	FLEXIBLE	FLEXIBLE	FLEXIBLE	FLEXIBLE
IMAGE QUALITY, FLOWS	NIL	NIL	SOME	SOME	NIL	NIL	NIL	NIL
IMAGE QUALITY, COLOR REGIST., RELATIVE PERFORMANCE	-	1	-	3	4	-	2	3
OTHER QUALITY ITEMS		SOME CLR FRINGING				FOV LTD. TO 33 X 44°		
MOTION TILT, ROLL, LIMITS, IF LIMITED	15° to 45° NOTE 2							
RELIABILITY/MAINTAINABILITY, RELATIVE	2	3	4	4	4	2	2	1
COST PER CHANNEL	56,000	99,500		275,000				

Without Kell, the resolution is 1000 lines per picture height and approximately 1300 lines per picture width. Exact figures depend on line retrace and vertical blanking.

The scan geometry is rectilinear and has less than 2% distortion with its projection lens. Scan is not adjustable for raster shapping although there is a small fixed adjustment available for correction of the light valves.

The large area contrast ratio is at least 75:1 and usually 100:1 without ambient light.

There is no X-ray radiation.

Projector weight is 145 pounds and is equipped with eye hooks for handling. The dimensions are 22-inches high by 17-inches wide by 30.5-inches long.

Of special interest, is a variation of the light valve used for certain systems. In these systems, one video generator drives two light valves in series. In this application, the expensive video generators will work at near 100% duty cycle. During the horizontal retrace period on one light valve, the second one is being scanned. Conversely the first one is being scanned during the retrace period of the second.

The amplifier bandwidth of each light valve must be equal to that of the video generator, but the spatial resolution frequency is one-half of what the amplifier could provide. This is due to the use of the two light valves which share one video generator.

"Horizontal" resolution on the light valve which is vertical in the above application is constant at 800 lines. This is due to the schleren grating in the pupil, whose spacing fixes the maximum resolution because of these optical limits.

It is possible to combine two black and white projectors with dicroics to achieve a two-color display. This provides better image contrast and brightness (at slightly higher cost). However, since it does not maintain the brightness or resolution required, this approach using oil deformographic light valves were not considered further.

8.3.1.2 Liquid Crystal Light Valves (LCLV). Monochromatic and tri-colored liquid crystal light valves are new devices under active development at this time. They were initially designed for large-sized alphanumeric displays. Color is controlled by the level of the video drive signal. However, neither shading control nor fast response in the unit were required for these initial applications, and as a result they were not applicable to real time systems.

A major development effort is now being sponsored by the US Air Force; the objective of which is to provide high quality, producible units for simulator applications using TV inputs. The goal for the completion of this task is June, 1979 (at the termination of the present contract). Performance observations of the most recently developed units, indicates that the single-color devices still have significant shortcomings with respect to light output, decay time, resolution, and freedom from manufacturing flaws.

The merging of three single color systems into a full color system design concept appears simple. A more detailed analysis indicates a high probability of additional problems in gamma matching, registration, brightness and color purity.

Despite the current problems, the concept has many advantages that make it desirable for use on FCIS, namely, brightness, scan rates and most importantly raster mapping.

The LCLV was seriously considered in the DIG-DOME system design since it can alleviate the mapping problem caused by the combination of the fixed DIG raster format and the separation of the eyepoint and projector locations within a dome. However, since optical mapping can be provided for the FCIS, the significance of the mapping capability diminishes.

However, if it is determined later that performance, cost, and reliability advantages of the LCLV outweigh those of the GE light valve, it may be substituted in the basic system design. Only minor modifications would be required for the structural, optical and electronic subsystems.

8.3.1.3 CRT Projectors. The CRT projector, the earliest type of large screen display device, has reached the limit of its potential. Philco-Ford is one of the major developers of this type of equipment. Although they have demonstrated good performance, reliability has been low. For use in simulators employing domes or spherical mirror assemblies, CRT projectors have one serious disadvantage. The use of three projectors complicates the mapping and color registration problems for spherical screen applications since the rasters are different for each CRT. The projector can be mapped and has adequate color convergence, but the large size of the optics greatly reduce the depth of focus. This would also require them to be mounted higher above the viewer's head for clearance.

CRT projectors can be used for the FCIS but appear to offer no significant technical or cost advantages over the light valve projectors.

8.3.1.4 CRT Monitors

8.3.1.4.1 Shadow Mask Type CRT. The display using the shadow mask CRT has been most economical when used in a

spherical mirror beamsplitter viewing device. This system has been provided for a number of aircraft simulator visual attachments, and is known as 'Wide Angle Collimated' (WAC) display. It has slightly better cutoff resolution than the GE light valve. The respective limits are 860 and 800 pixels per picture width. However, its application is limited to systems which do not display more than about 28° by 47° per CRT. When used for a larger field of view, the shadow mask dots are visible and become annoying. They present a high spatial noise level within the picture. This reduces the effective resolution of the system.

The shadow mask CRT does provide adequate brightness and mapping with the WAC viewing device, but its limited pupil is a serious disadvantage when extensive trainee head motion is required.

8.3.1.4.2 Two-Color, Large CRT Monitor Assembly. The two-color large CRT monitor assembly is used with the expanded WAC display viewing system. It is comprised of two mono-colored CRTs using 26-inch CRT glass envelopes. Phosphors in the two tubes are mixtures of P1, P27 and P37, proportioned to provide a range of hues from pink and brown, through white to green. It does not permit showing saturated reds or blues. However, these colors are not significant in a tactical trainer since saturated hues of these colors would not be prevalant under battlefield conditions. True color or shade matching is not a requirement for the FCIS, since color is used to permit object differentiation, not necessarily to portray true colors. That is, colors are used to represent terrain characteristics and not necessarily to represent the true colors to permit separation of items of equal viewed brightness in the world. This assembly has the same raster registration problems as those of the two-channel light valve assembly using the Hughes color liquid crystal light valves, and can be controlled in the same way. Its attributes are:

a) A two-color system provides the hues mostly found in the battlefield, - greens, browns, blacks, whites, tans, etc.

b) It is the simplest color system providing color differentiation.

c) It provides resolution more than double that provided by the GE or Hughes projectors.

d) Its price is not significantly greater than that of the GE projector.

e) It is fully mappable.

8.3.1.4.3 Three-Color Small CRT Monitor Assemblies. An

assembly of three small CRTs with color faceplates is one which could be developed by Link for use in the M60A3 optical instruments system displays. Three tubes are required to match the hues produced by the other full-color devices which may be used for out-of-the-hatch displays. If a two-color display system were to be used for the out-of-the-hatch displays, two small CRTs would be used for this approach. The size of the CRTs would be selected to simplify the design of tank optics simulation systems. Electronics design is straightforward, using appropriate techniques and equipment designs adapted from the large CRT monitors or from color cameras built by Link. The designs would use raster configurations, timing, and mapping as required. The brightness of the CRTs can be selected to be any value up to 300 foot-lamberts before projection CRT considerations come into play.

Since resolution decreases with CRT brightness, it is desirable to design the optical instrument system so that the CRTs are viewed directly through the optics rather than on intermediate screens. At the same time, it is desirable to decrease the number of beamsplitters and other loss-producing elements so that brightness on the face of the CRTs may be kept as low as possible, thereby improving the resolution available.

8.4 Image Display Viewing

8.4.1 Design Approaches. In a visual system the viewing system is the hardware which accepts an image from a display input device and presents it to the observer. There are several methods of implementation under consideration for the FCIS training task. They are:

1. Flat screens

    a. Front Projection
    b. Rear Projection

2. Spherical Screen (Domes)

    a. Full Dome
    b. Partial Dome
    c. Partial Dome on Motion System

3. Collimated Display

    a. WAC
    b. Expanded WAC

4. Special Refractive Devices (for powered instruments)

There are several characteristics of the chosen motion system and image generator which must be considered in designing the displays and choosing the recommended approach.

The motion system produces approximately ± 15° of pitch and roll. Because of this motion the commander's eye moves about ±33 inches. This motion, coupled with the 30 inch vertical range of potential eye positions, requires a floor-mounted screen that is quite large and distant. An additional consideration is the limited mapping capability of the DIG system which is only capable of moving a point along a straight scan line or moving a scan line parallel to itself. The limited correction which can be achieved with this type of mapping will affect the display size, type, and projector placement so that distortion is minimized. However, there is no fixed reference available to the observer to determine display distortion and therefore, it tends to be less objectionable than a system with sights looking directly at the display. The sights for this system are separately generated, displayed and scored.

8.4.1.1 Flat Screens. There are two types of flat screens: rear -projection and front-projection. The rear-projection screen is dismissed as a candidate because of size, and low luminosity and its inherently low gain. The front projection screen which is coated with retrodirective rather than reflective materials, is a potential candidate.

The rear projection screen works as shown diagrammatically in figure 8-12.

This figure shows a typical screen of gain 3 and the apparent gain when an observer views several positions on the screen. It is apparent from the diagram that the gain, and hence brightness, will vary greatly from the center to the edge of the screen. Both the field of view per channel and projector field are 60° . The bend angle between the incident ray and the ray scattered to the observer is 60° . Figure 8-13 shows the gain for a collection of typical screens. One can be selected by using a falloff requirement of 50%. The S-50-R comes closest to meeting this with a fall-off from center to edge of (.55/1.2) X 100 = 45%. This number is derived from the ratio of the gain on axis to the gain for a 60° bend angle. A rear projection screen must be floor-mounted because the distance from the projector to the screen would yield too high a moment of intertia on the motion system. For example, the projectors would be more than 25 feet from the observer. The observer's head moves 33 inches due to roll or pitch. Therefore to reduce parallax error, the screen must be significantly removed from the observer. For viewing distances of 20 feet and 28 feet, the screen is 34-feet 6-inches and 48-feet 6-inches wide respectively for a 600 projection angle. This screen must be made in sections because a single screen this wide does not exist.

The brightness of the screen is calculated by dividing the luminous flux output from the projector by the area of the screen and multiplying by the gain. The area of the two

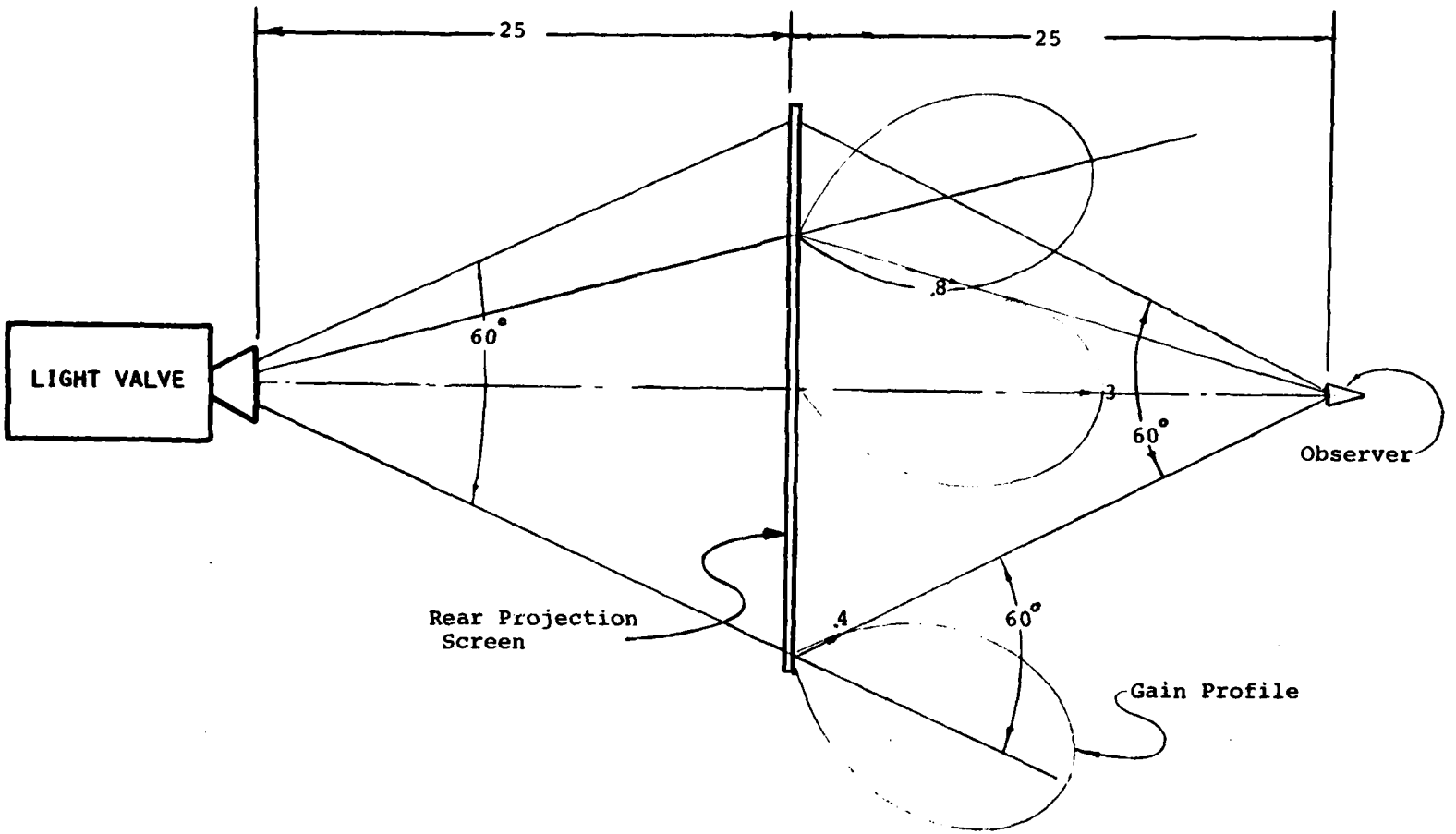

Figure 8-12 Rear Projection Screen Arrangement

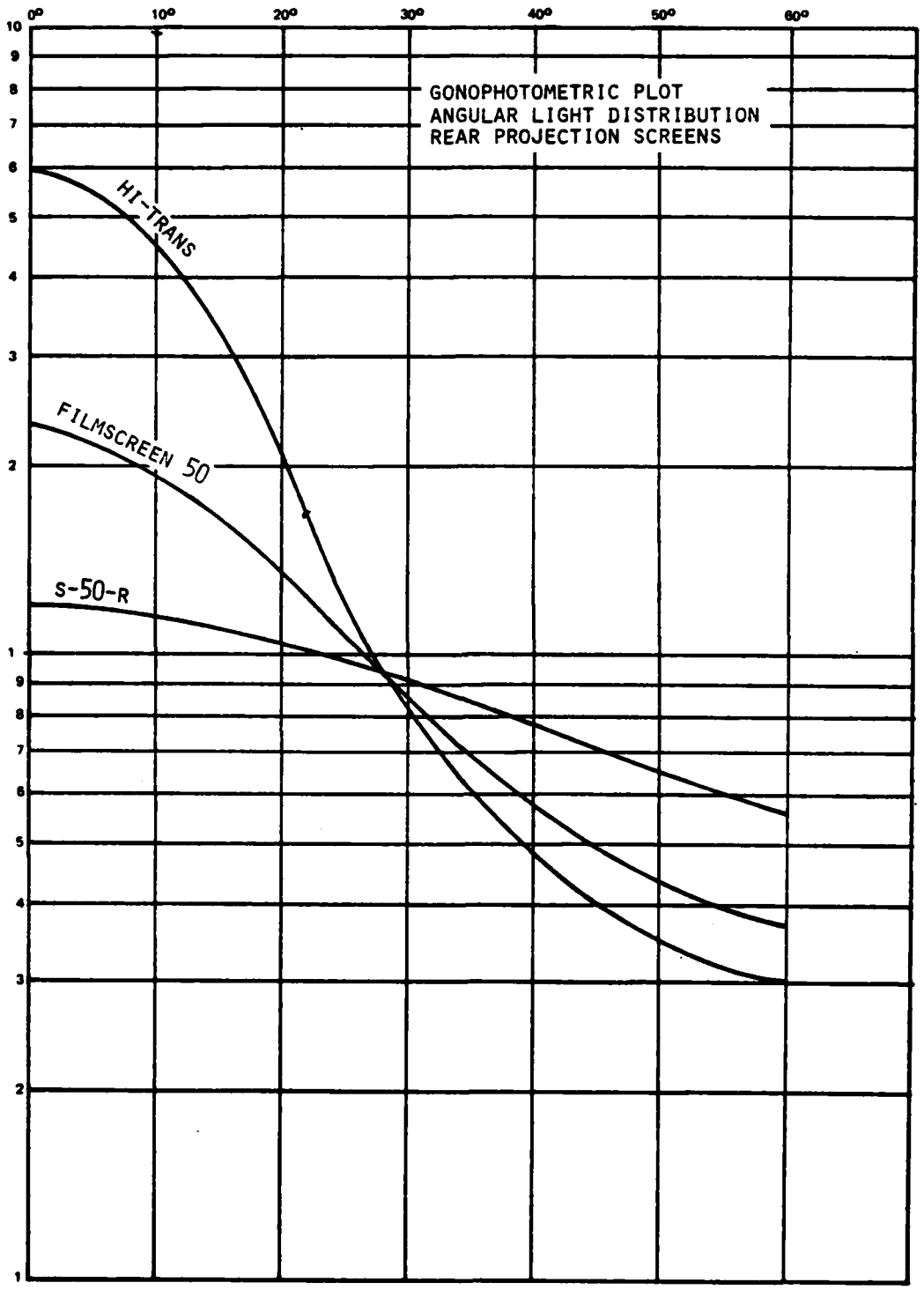

Figure 8-13 Typical Screen Gains

screens is 892.7 feet^2. and 1764.2 ft.^{2} for an aspect ratio of 3 X 4. The luminous flux is 500 lumens and the gain on axis is 1.2 while the gain at the edge of the screen is 0.55. The brightness ranges from 0.672 foot-lamberts at the center to 0-308 foot-lamberts at the edge for a 34 foot 6 inch wide screen. The comparable set of numbers for the 48 foot 6 inch wide screen are 0.340 foot lamberts and 0.156 foot lamberts.

This screen is quite unacceptable because of its size and low luminosity. Higher central luminosity can be had at the expense of falloff or edge luminosity. A quick reference to figure 8-13 shows that Filmscreen 50, while only doubling the central brightness, reduces the edge brightness to one-half the luminosity above. This yields a falloff of 15%.

Front projection screen surfaces are of two types: retrodirective and reflective. The retrodirective has its peak gain in the reverse direction of incident light. The reflective screen has its peak in the direction of a reflected ray. See figure 8-14.

The reflective screen can be eliminated in the flat screen application since it has a fall off problem similar to the rear projection screen. The retrodirective screen can be used if the projectors are located close to the observer.

Only the retrodirective flat screen can have a high-gain to compensate for the great distance of the screen from the projector. However, with high-gain, the observation point becomes more sensitive to falloff from head motion. Therefore, even though gains of 125 are possible, a screen of much lower gain must be used because the motion system moves the observer through a large angle. Display system numbers are determined below to find fall off and sizes.

The projector centerlines are about 30 inches above the surface of the cupola. The lowest and highest eye position is 12 inches below the cupola and 16 inches above the cupola. The view point is 16 inches above the cupola and is the most used position. For a 20° down field from the low eyepoint, the bottom of the screen is found from the equation below which was written from figure 8-15.

$$h = 336 \tan 20°$$
$$= 122.2"$$

The required down angle "θ" from the projector is found from the equation:

$$\theta = \tan^{-1} \frac{14 + 16 + 12 + 122.2}{336}$$

$$= 24\ 3/4°$$

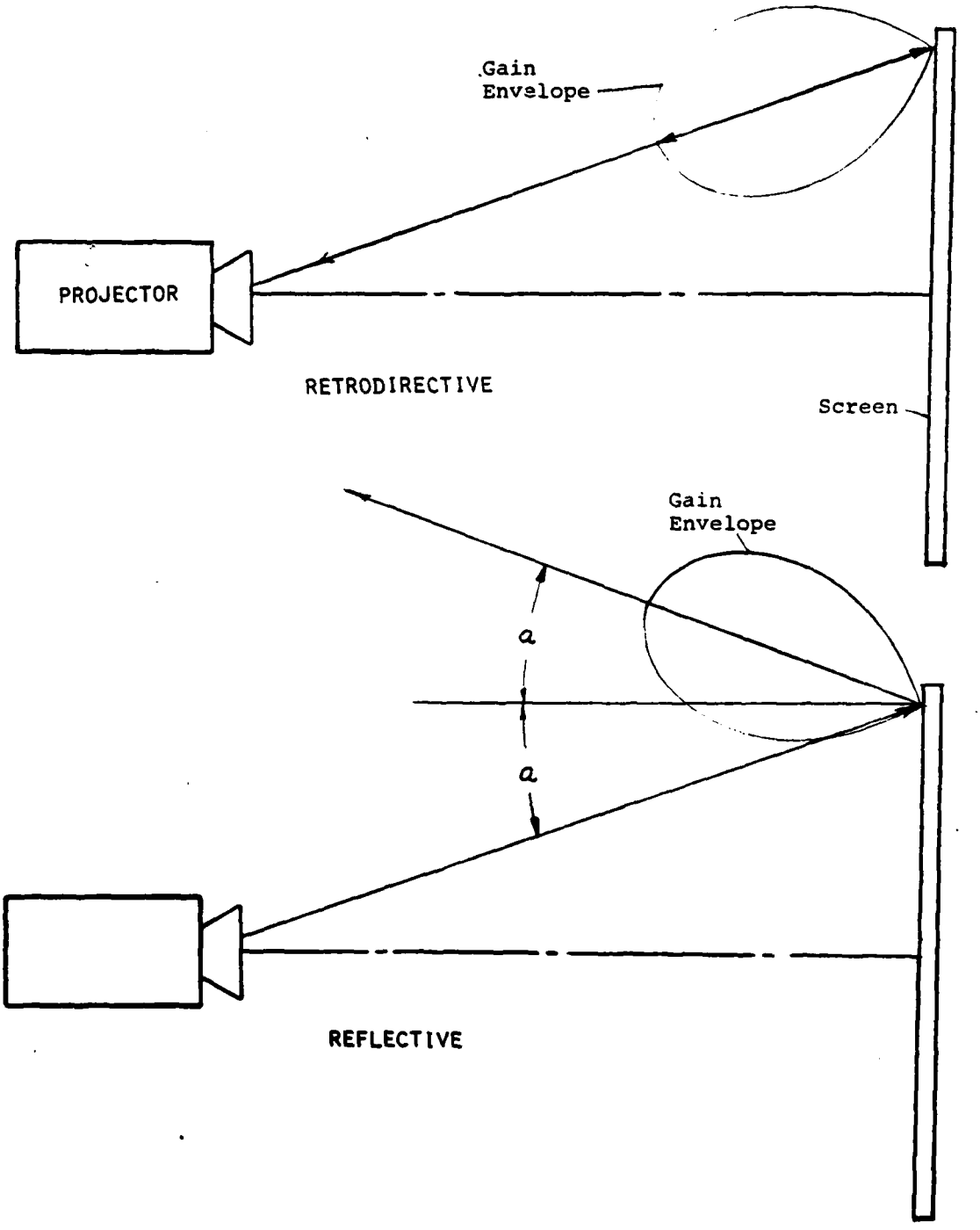

Figure 8-14 Reflective/Retrodirective - Gain Envelopes

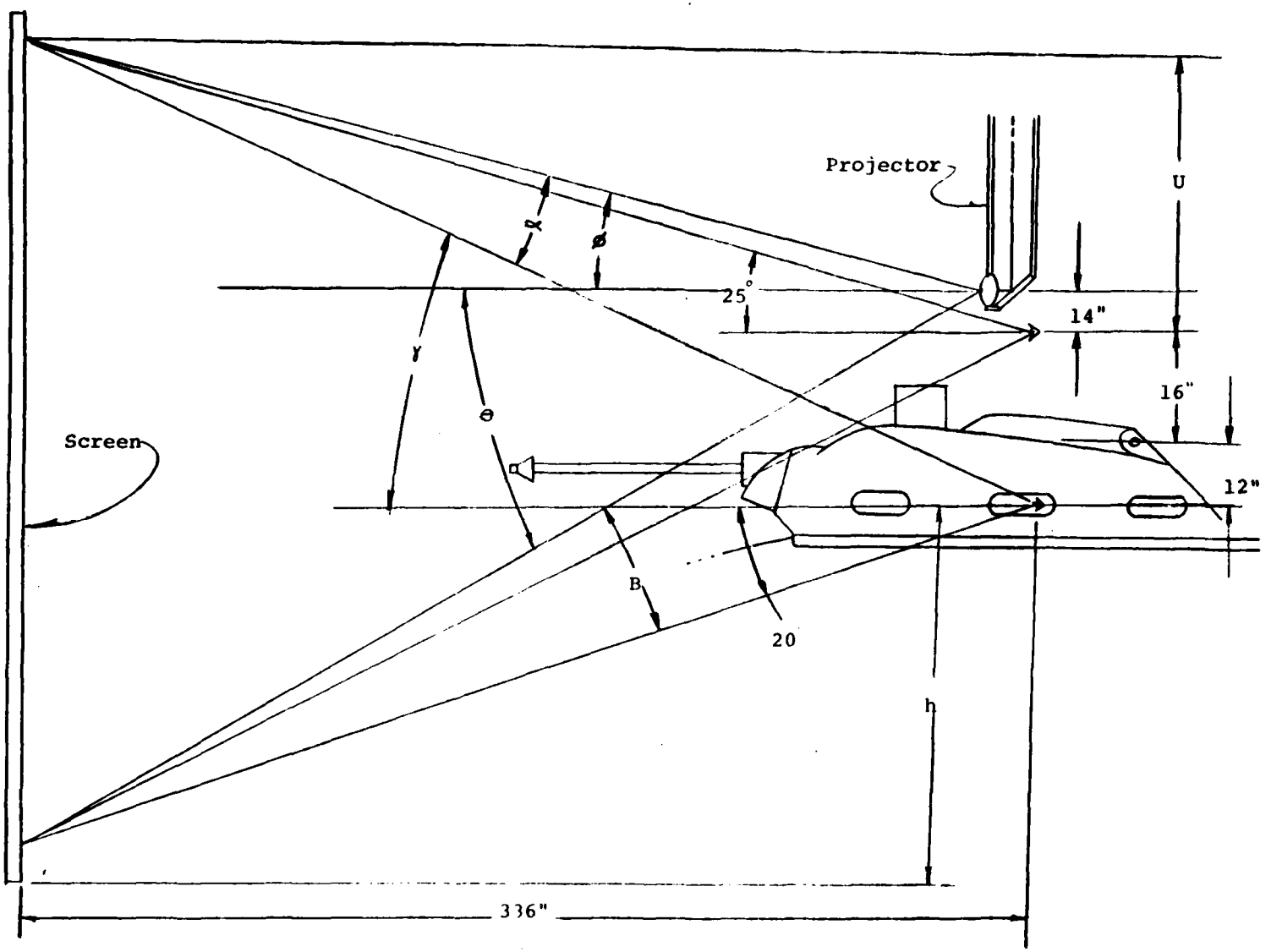

Figure 8-15 Projector/Flat Screen Arrangement

The height of the screen "V" above the highest eyepoint for an up field of 25° is found from the equation.

$$V = 336 \tan 25°$$

$$= 156.7"$$

The total height of the screen is 156.7+16+12+122.2=306.9 the width of the screen "l" can be found from the aspect ratio 3X4 of the G.E. light valve

$$l = \frac{4}{3} \times 306.9"$$

$$= 409.2"$$

The projector up angle "ϕ" can also be calculated

$$\phi = \tan^{-1} \frac{156.68-14}{336}$$

$$= 23°$$

The available up field "γ" from the lowest commander position is

$$\gamma = \tan^{-1} \frac{156.68+16+12}{336}$$

$$\gamma = 28\ 3/4°$$

To determine the maximum falloff due to screen gain, the bend angles alpha and beta 'α' and 'β' must be determined:

$$\alpha = \gamma - \phi$$

$$= 28\ 3/4 - 23 = 5\ 3/4°$$

$$B = \theta - 20°$$

$$= 24\ 3/4° - 20 = 4\ 3/4°$$

The lumionsity and falloff can be estimated from the screen area, illumination and the greatest bend angle for the condition of no simulàtor motion.

The area is 409.2 X 306.9 ÷ 144 = 872 Ft^2. For illumination of 500 lumens, the gain for a 6 foot lambert screen can be calculated.

$$G = \frac{6}{500/872}$$

$$= 10.5$$

8.4.1.2 Domes. There are three major variations to dome approach. They are:

a) Large floor-mounted dome with projectors suspended from top of the top dome.

b) Large dome with only the projectors mounted on the motion system.

c) Both dome and projectors mounted on the motion system.

The first variation permits the use of the dome as a facility. The horizontal field of view can be whatever is desired. In the verticle direction, it can be anywhere within an area 30° down by 60° up. The motion system would move within this dome. This system requires a radius of approximately 40 feet in order to minimize parallax errors in the image due to head and simulator motion. The size of the dome permits it to be used as the simulator facility resulting in significant life cycle cost savings.

In the second approach, the projector is mounted to the motion platform to reduce the size of the dome. The dome radius is of medium size because there is very little parallax error due to the projectors being fixed to the motion base. Additionally, the size is large enough to minimize parallax error to the commander when he moves to various positions both in and out of the hatch. Image swimming due to motion system movement and other errors are present but are small for this system.

The last configuration has no swimming of the image since the dome and projectors are fixed relative to each other. Therefore, the dome can be even smaller.

However, the gun, fenders and extended tank components must be projected on the screen since the dome is too small to allow for the true physical simulated configuration except for a 'shortened' gun. An important advantage of the system is that it simplifies the mathematical relationship between the display and the tank motion system since they are now integrated.

8.4.1.2.1 Large Facility Dome. This configuration uses a large spherical dome which can be simply converted to a facility by sealing the joints. It can, of course, if desired, be used inside another building. However, quite an advantage on life cycle cost can accrue by using the dome as a facility. It also has an advantage of being able to be set up anyplace in the world without a building.

Figure 8-16 shows the simulated M60A3 inside the dome with room for equipment and classrooms underneath. A pedestal in the center supports the motion system, with its interior containing the hydraulics pumps. The area surrounding the pedestal contains the computers, distribution cabinets and

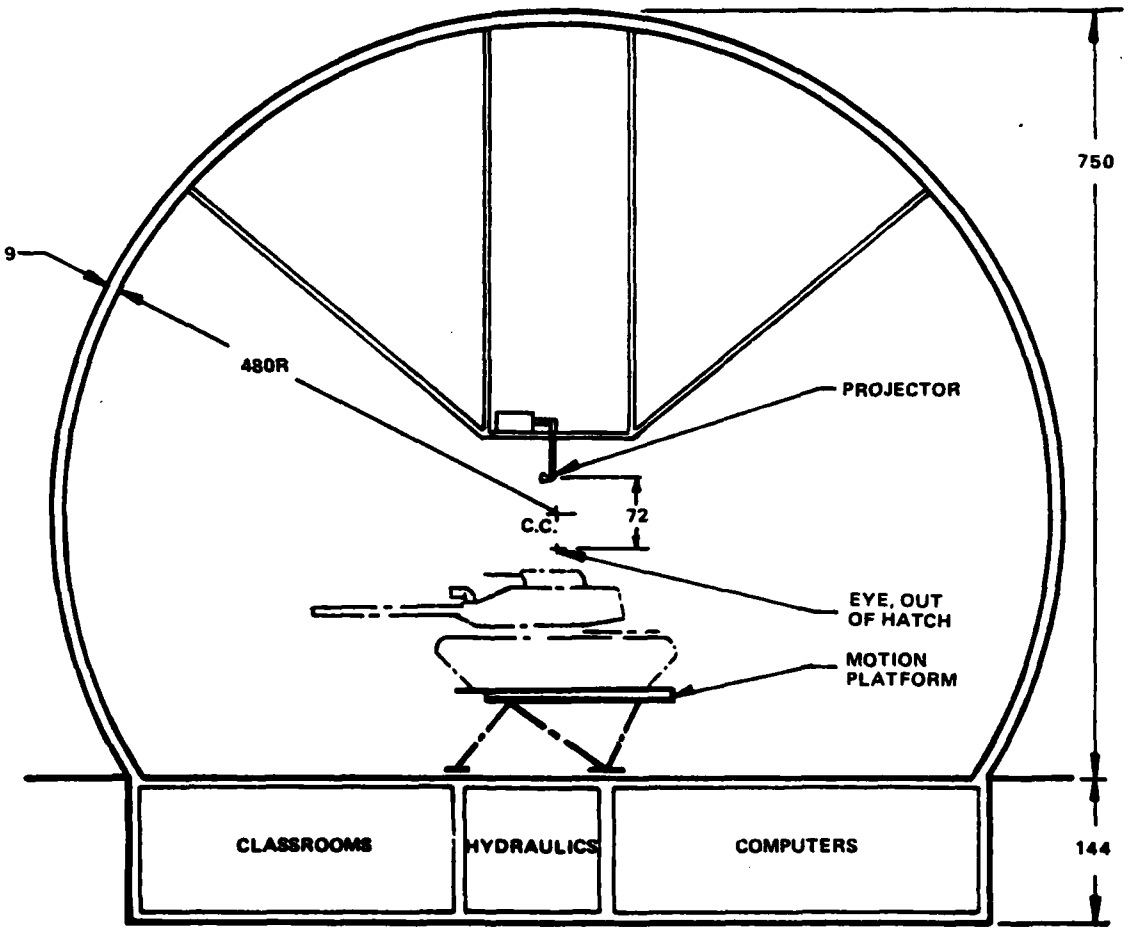

Figure 8-16 Large Facility Type Dome Arrangement

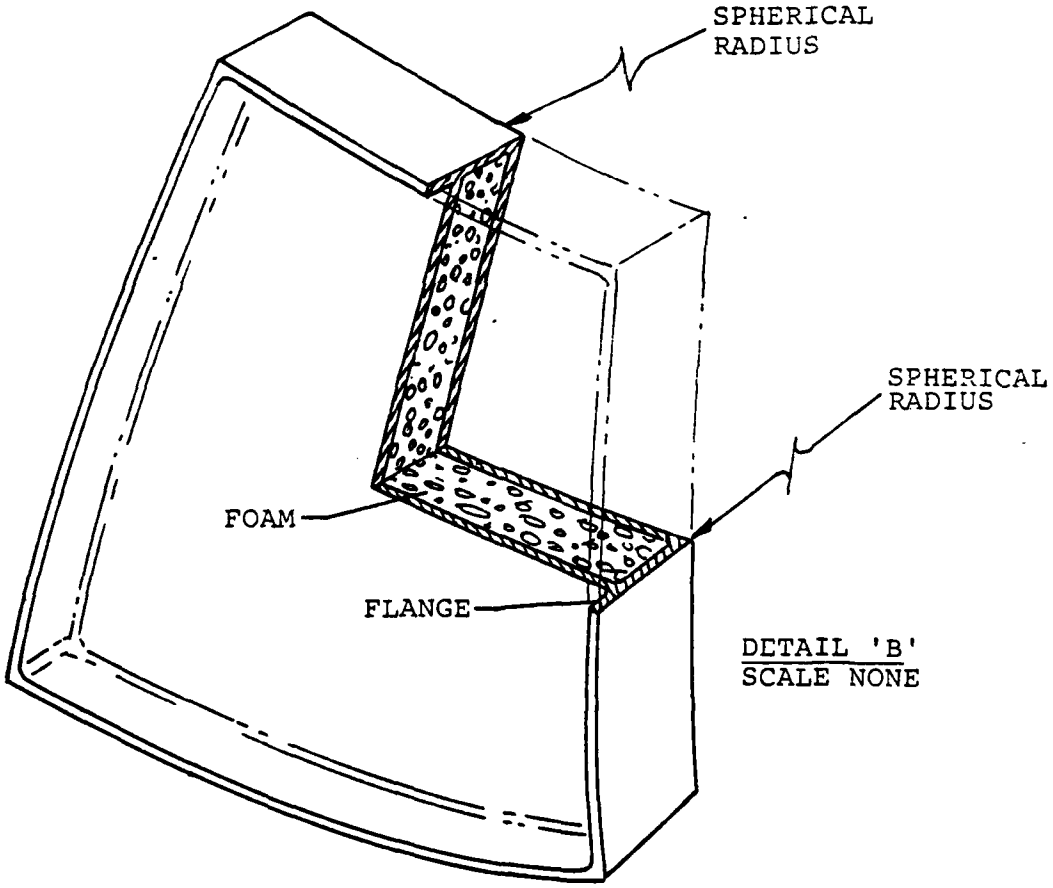

Figure 8-17 Large Facility Dome-Sectional View

classrooms. The ceiling for this area is of composition material which is easily installed and can be taken apart and reused.

The dome is constructed of hollow, flanged fiberglass panels, which are filled with foam. The foam stiffens the hollow panel and provides excellent insulation. Figure 8-17 shows a detailed section of a panel. The panels are bolted together through their flange. The flange interface is then sealed to keep weather out. The fiberglass dome is very strong because of its basic shape and the use of the flanges which form a beam. The equator is held rigid by the flanges which are bolted together securely to absorb the tension load of the upper half of the dome.

The truss and projectors will weigh approximately 3000 pounds. This load is transferred to six points about the mounting latitude by the projector trusses. This results in 500 pounds per load point. The stress in the fiberglass panels at the load points is 3800 pounds per square inch, providing a safety factor of 10.

Figure 8-18 shows another variation on the facility dome concept where all equipment is in trailers. This is a more portable training system since all that is required is a concrete pad to mount the motion system and a footer to hold the dome.

The use of a retrodirective screen will simplify reinstallation because refinishing the dome after transport is easier. The reflective screen would highlight irregularities more because it is specular and therefore would not mask panel misalignment.

8.4.1.2.2 Medium Dome-Projectors on Motion Base. A system with the projectors mounted on the motion platform uses a smaller dome. The size is a result of the elimination of the parallax error due to the movement of the motion system relative to the projectors. The small parallax error left is due to the crew member being displaced from the projectors. However, Dynamic distortion errors still exist since the projectors move relative to the screen.

Figure 8-19 shows the configuration of the projectors and how they are cantilevered at the rear of the turret from the motion base. They are arranged to project an image with a field 50° wide by 63.75° high. However, the height will appear shortened to the eye because of the curved screen and the displacement of the projector from the eye.

The area of the screen is calculated below to determine the luminosity of the screen. The light valve will project

an angle of 50° wide X 63.75° vertical. Area can be found from the equation:

$$A = \int_{\phi} \int_{\Theta} r^2 \cos(\theta) d\theta d\phi$$

The azimuth angle goes from 0° to 50° and the elevation runs from 40° above to 23° below the horizon. The angles in radians are 0 to 0.873 and 0.698 to 0.401 in elevation

$$A = \int_{o}^{.873} \int_{-23}^{+40} r^2 \cos \theta d\theta d\emptyset$$

for r = 28 ft.

$$A = [28]^2 \; [.873] \; [\sin 40 - \sin(-23)]$$

$$= 707.4 \text{ sq. ft.}$$

The gain required for a given luminosity can be found by the equation

$$G = \frac{1}{T} \frac{A}{F} B$$

Where T is the transmission of the projection lens, F is the flux, and B is the luminosity. For B = 6 foot-lamberts the and F = 500 lumens and transmission T-.7

$$G = \frac{1}{.7} \times \frac{707.4}{500} \times 6$$

$$= 12$$

The dome can be used as the facility as described previously. Space, however, is limited and two separate facilities will be needed, one each for the fighting and driver stations.

8.4.1.2.3 Small Dome and Projectors on Motion Base. This configuration can use a smaller dome because the motion system does not move relative to either the projectors or screen. However, the size of the dome does make the imagery more sensitive to parallax error due to head position. The error is not dynamic and so is less objectionable than with a moving system.

The dome, and projectors on the motion system also eliminate the problem of coordinating the motion and visual systems. The projectors are suspended from the top of the dome in this configuration (as with the large dome) thus permitting 360° projection without the interference by the supporting structure of the projectors.

This system must have a projection lens which has its projection point effectively at an average eyepoint. This will provide correct display mapping at this eyepoint. Other points have errors determined by their displacement from the average eyepoint.

A configuration is shown in figure 8-20. The average eyepoint indicated is midway between the out-of-hatch and cracked-hatch positions. The horizon appears 8 inches high or low from the two extreme eyepoints. This is an angle of 2° 44'. It is recognizable if references are used. But there are no references which can be used in either the powered instruments or periscopes. The powered instruments have separate imagery. Only the loader's periscope and commander's 1X periscope look at the screen. These reflect from articulated mirrors which are calibrated to point correctly.

The commander's vision blocks are about 12 inches below the cracked hatch position and 20 inches below the position for a correct display. The error in the horizon for 20 inches would be 6°47' without correction. This error is noticeable without a reference but can be corrected to have no error by replacing the plano-parallel glass blocks with a simple optical device to make the image appear correct. There will be no image error from this point.

Background imagery for the dome is provided by G.E. PJ 5100 HB TV projectors, equipped with an optical system that converts the format to 63.75° high by 50° wide. The format is also rotated 90° so that the wide direction is vertical on the screen.

The field of view is proportioned to provide 20° down from the horizon with cracked hatch and 35.5° up from the out-of-hatch eyepoint.

The dome is coated with reflective material. Since the center of curvature is located 2 inches above the out-of-the-hatch eyepoint the reflective or conjugate point is the average eyepoint.

The bend angle for this system is a maximum of 6° 47' through the vision blocks. If the falloff for this angle is desired to be less than 50% the gain could be 7.8. This is found from the figure 8-22 which is a plot of the bend angle at 50% falloff versus peak gain for Singer screen coating.

The area of a screen element can be calculated from the integral:

$$A = \iint_{\theta\phi} r^2 \cos\theta \, d\theta \, d\phi$$

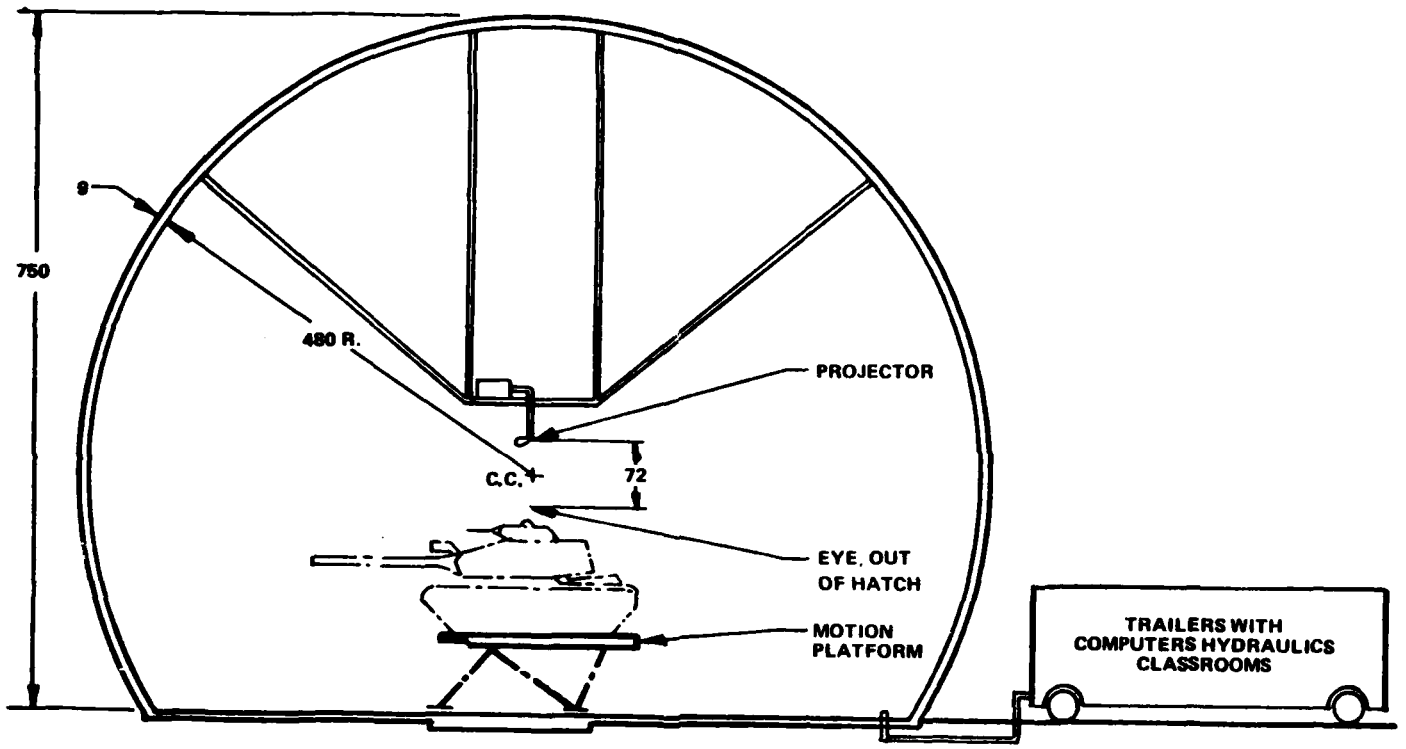

Figure 8-18 Dome and Trailer Arrangement

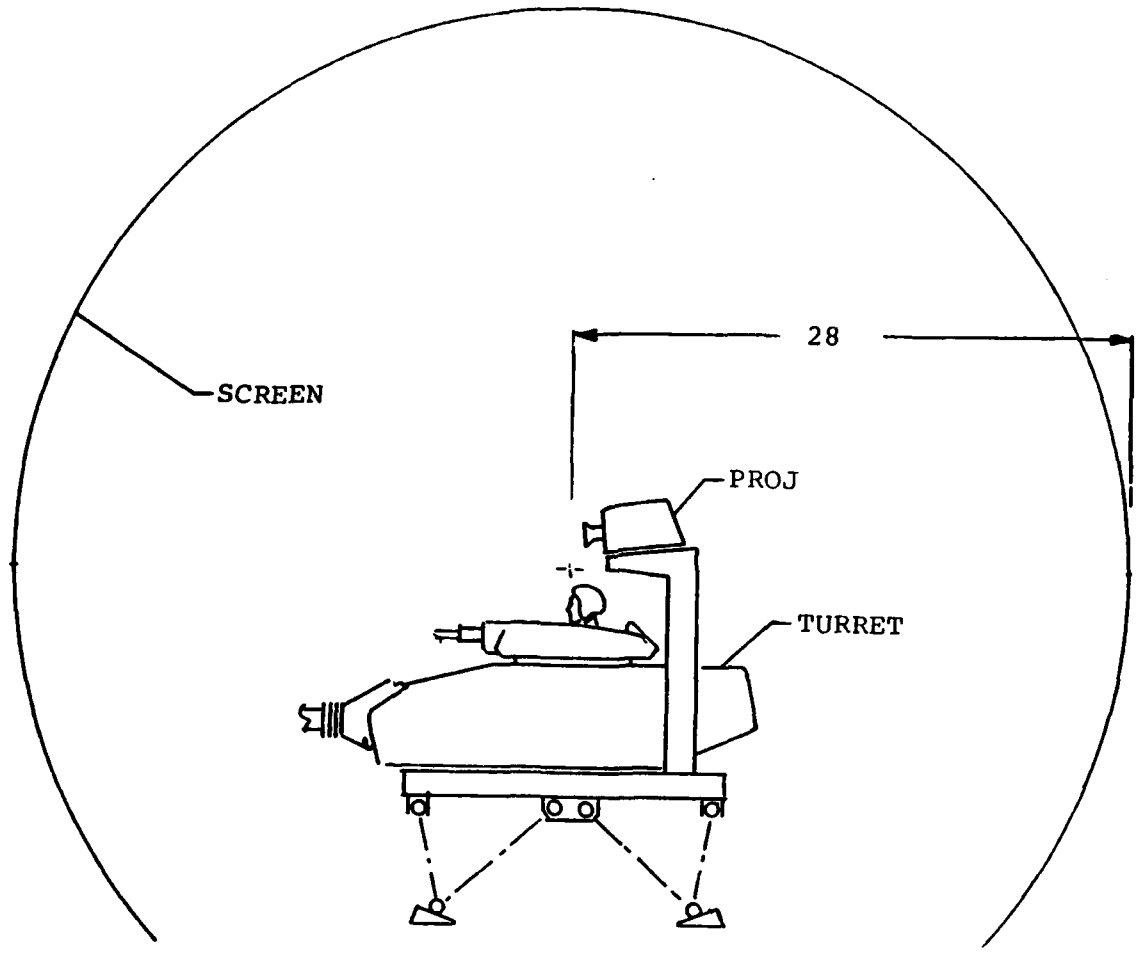

Figure 8-19 Medium Dome/Projector/Platform Arrangement

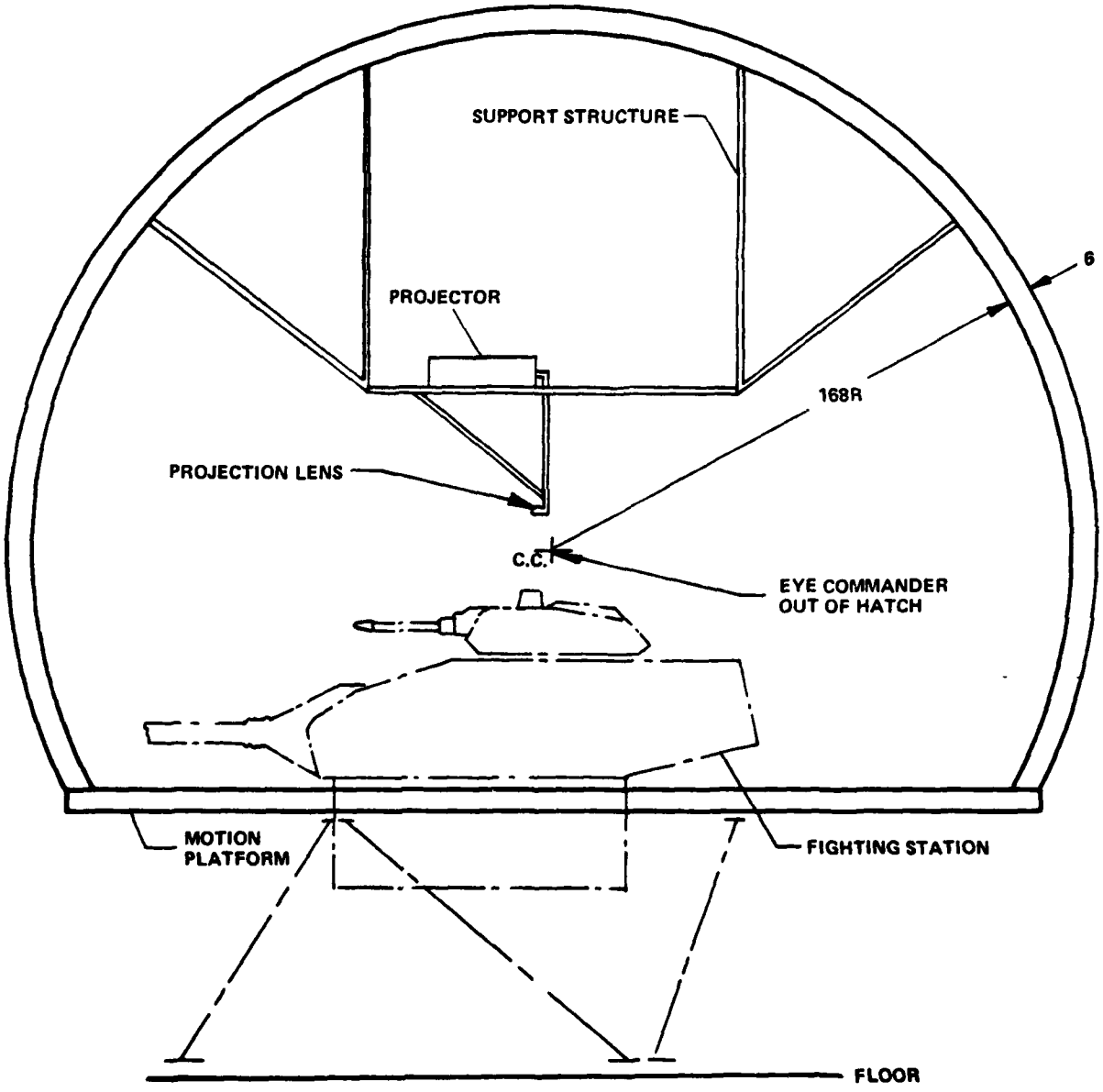

Figure 8-20 Small Dome/Motion Platform Arrangement

The terms can be interpreted from Figure 8-21. The terms in the brackets represent the magnitude of the edges of the differential area. The coordinate system is projective.

The $\hat{x}$ angle is the dihedral angle between vertical planes. One is the reference plane centered in the screen element; the second contains the field point.

The $\hat{y}$ dihedral angle is measured between elevation planes. The reference plane is horizontal. The second contains the field point.

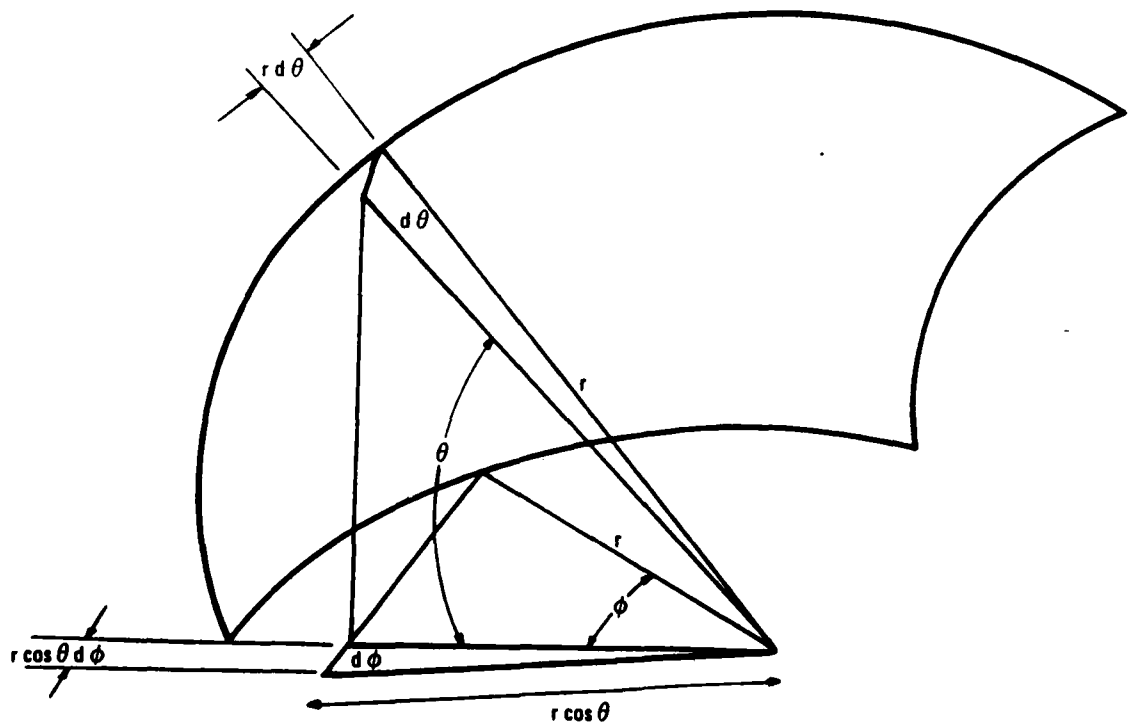

Figure 8-21 Small Dome Geometry

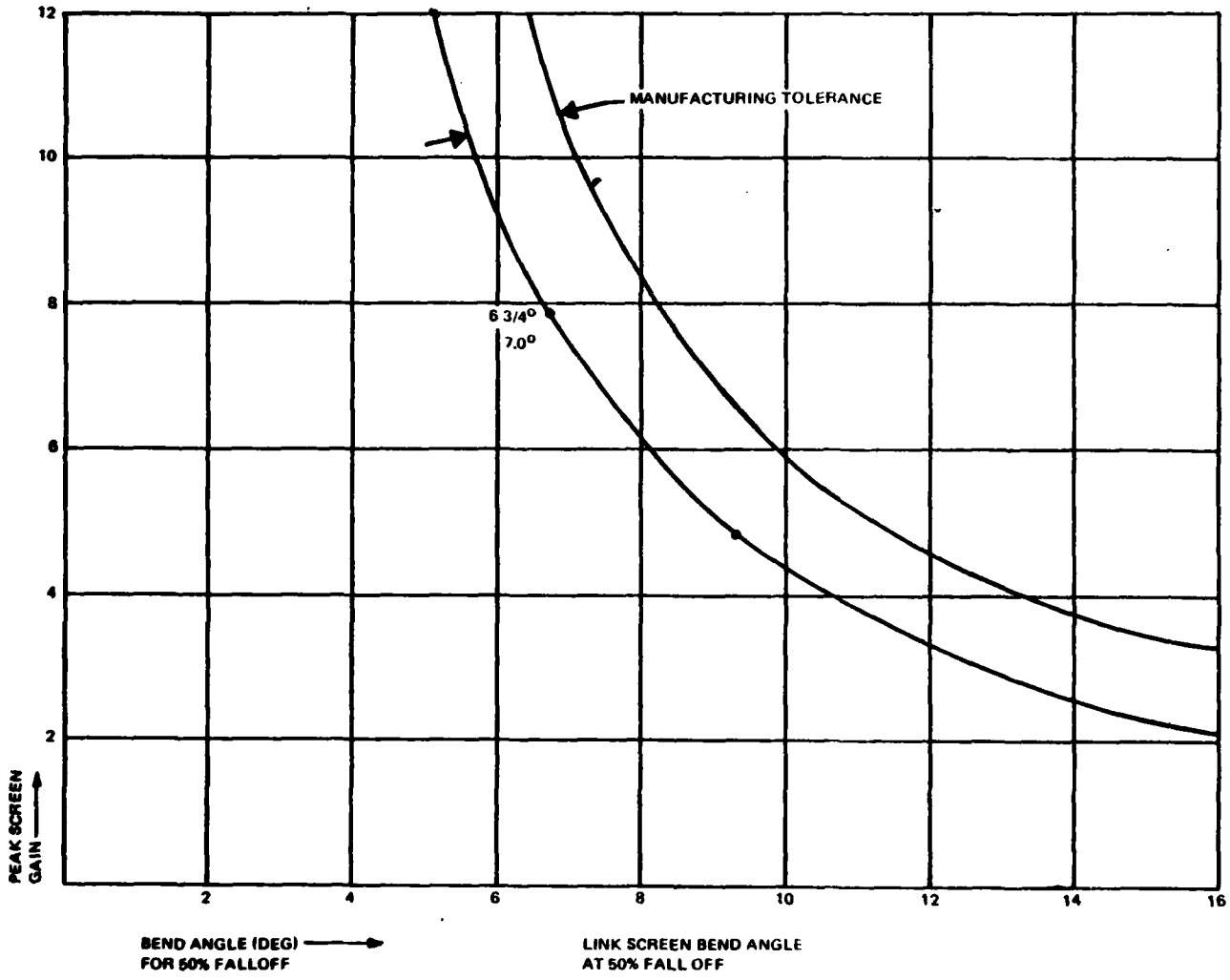

Figure 8-22 Bend Angle/Peak Gain Plot

The field of view from the center of the dome is 35° 45' up and 25° 30' down. The width is ±25°. These are the limits of integration. The above equation for the area of a screen can be evaluated.

$$A = \int_{-25}^{25} \int_{25°30'}^{36°45'} r^2 \cos\theta \, d\theta \, d\phi$$

$$A = r^2 [\phi]_{-25}^{25} [\sin\theta]_{-25°30'}^{36°45'}$$

$$A = 176 \text{ ft}^2$$

The luminosity for a gain 1 screen can be calculated from the equation below. The transmission T of the optics is 30% and the luminous emissivity of the light valve F is 500 lumens.

$$B_1 = \frac{F\ T}{A}$$

$$B_1 = \frac{500 \times .3}{176}$$

$$= .85 \text{ Ft lamberts}$$

The screen gain for higher luminosity can be calculated from the equation below. The luminosity desired is B_G. For values of 6 and 10-ft lamberts for this

$$G = \frac{B_G}{B_1}$$

$$G_6 = \frac{6}{.85} = 7.1$$

$$G_{10} = \frac{10}{.85} = 11.8$$

Using figure 8-22 the bend angle for 50% falloff is about 8° for the 4.9 gain and greater than 13° for the gain 2.9. This provides plenty of movement from the conjugate position. The movement allowed for 50% falloff is 26 inches for gain and 4.9 and 38 inches for gain of 2.9. These movements are adequate for the commander. The latter is adequate for the loader.

8.4.1.3 Collimated Displays

8.4.1.3.1 WAC Windows. The mirror beamsplitter display forms a more compact visual system compared to a dome. However, the pupil with this configuration is approximately 16 inches while the requirements are for 28". In this approach, the

image on a Shadow Mask CRT is collimated by the spherical mirror and passes through the beamsplitter. Figure 8-23 shows an elevation view of a display element for the commander.

The radius is increased to 50 inches from the visual 50 inches to provide enough pupil for operation with "cracked hatch" and "buttoned up" viewing through the vision blocks. The tilt of the beamsplitter is 49° to provide more "up" field from the effective eyepoint of the commander's periscope. This allows the use of the display as the input to the periscope and the commander's IR telescope.

The resulting field of view at the various eyepoints is noted on the drawing. The vision block has a total of 27° vertically. The cracked hatch has between 21.5° and 23° dependent on the lateral position of the eye. The periscope provides about 17°. The periscope mirror is not moved by the gun but the imagery in the display moves to simulate periscope movement. Figure 8-24 shows a plan view of the display element. The field of view is 34° total from the central viewing point. When viewed from the displaced position the field is 40°.

These displays can be configured about the commander's central viewing point as shown in figure 8-25. The configuration covers 238° horizontally. However, display elements can easily be added or deleted to alter the field of view.

Figure 8-26 shows the elevation view of the cupola and the forward display. The location of the loader's eyepoint for cracked hatch is in a position to use part of the display provided for the commander. The image he sees has some distortion but it is quite adequate for looking for threats.

Figure 8-27 covers the loader's hatch, and shows his field of view for 4 display elements. The field of view of each element is the same as for the commander. The commander can look through the loader's displays so that he sees a nearly full horizontal field. There is some distortion but the imagery is suitable for threat detection. The division of responsibility for observation is duplicated by the fields provided for the commander and loader.

The driver's displays are shown in figure 8-28. Each of the driver's vision blocks are covered by a collimated display. The side windows are important for making clearance judgements when passing trees, buildings, and so forth. They are also used for power and brake control when going over a knoll or into a gulley. The display elements are the same as for the commander.

Out-of-the-hatch viewing for loader and commander can be accomplished by putting their displays on a hydraulic lift so that the pupil can be raised to the out-of-the-hatch position.

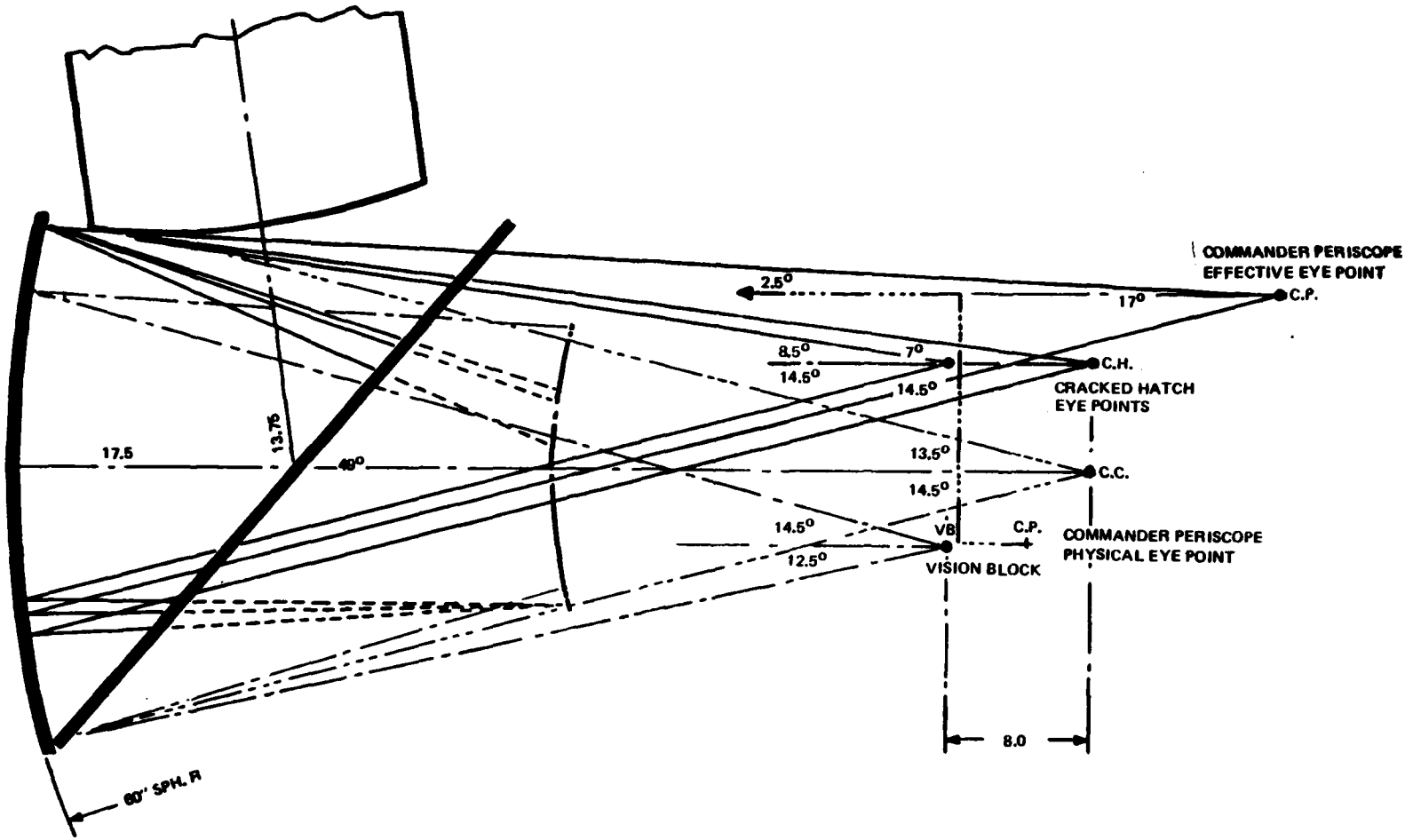

Figure 8-23 WAC Window Geometry - Commander

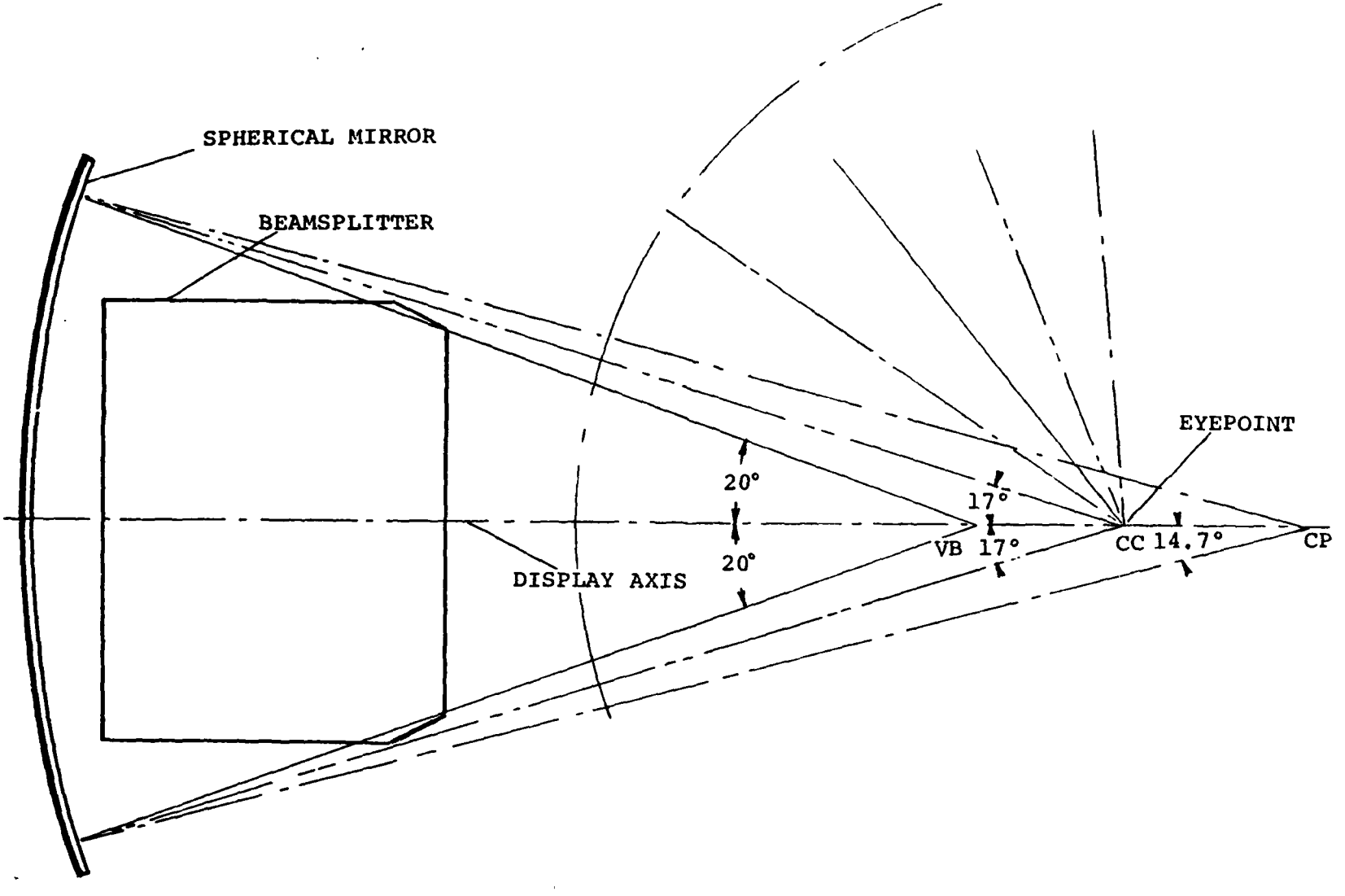

Figure 8-24 WAC Window Display Element - Plan

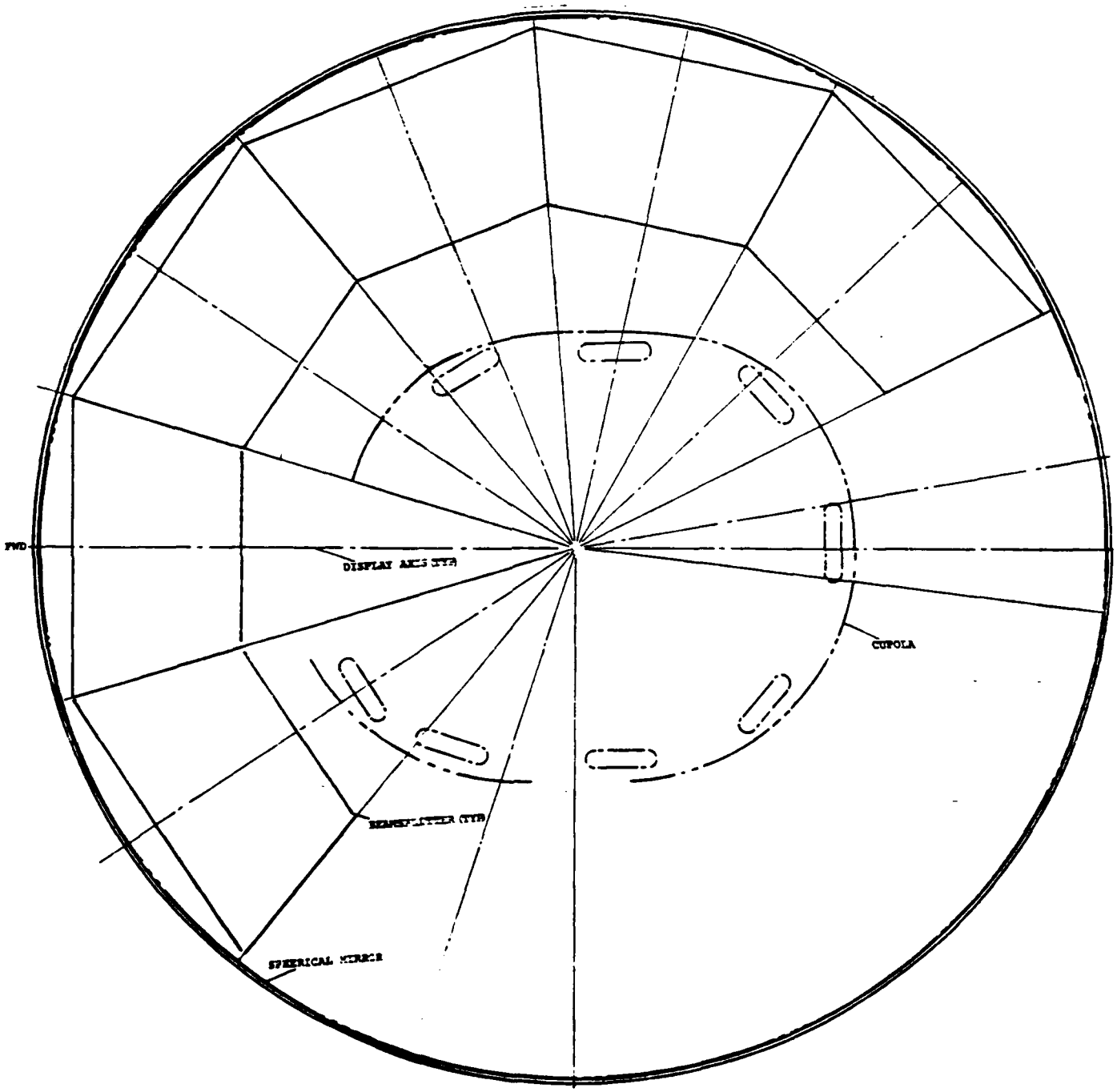

Figure 8-25 WAC Multiple Configuration

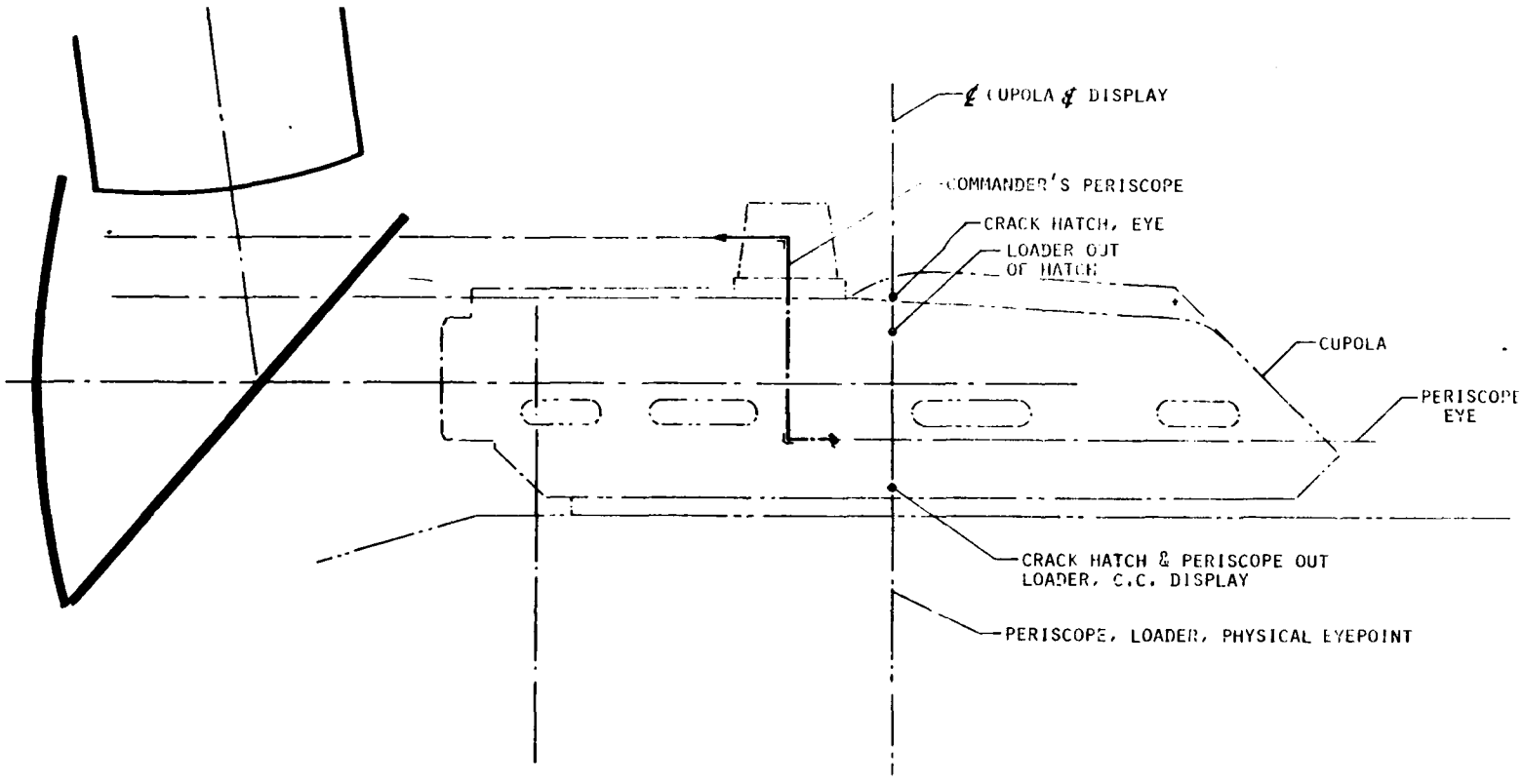

Figure 8-26 WAC Window Configuration

AD-A091 424 SINGER CO BINGHAMTON NY LINK DIV F/G 19/3
DESIGN DEFINITION STUDY REPORT. FULL CREW INTERACTION SIMULATOR--ETC
JUN 78 N61339-77-C-0185
UNCLASSIFIED LR-895-VOL-3 NAVTRAEQUIPC-77-C-0185-000 NL

2 OF 3
AD
A091424

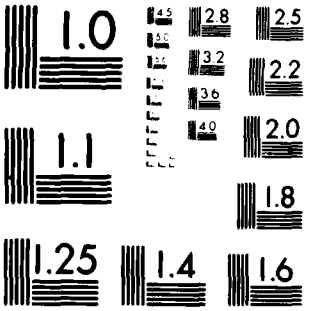

MICROCOPY RESOLUTION TEST CHART
NATIONAL BUREAU OF STANDARDS 1963 A

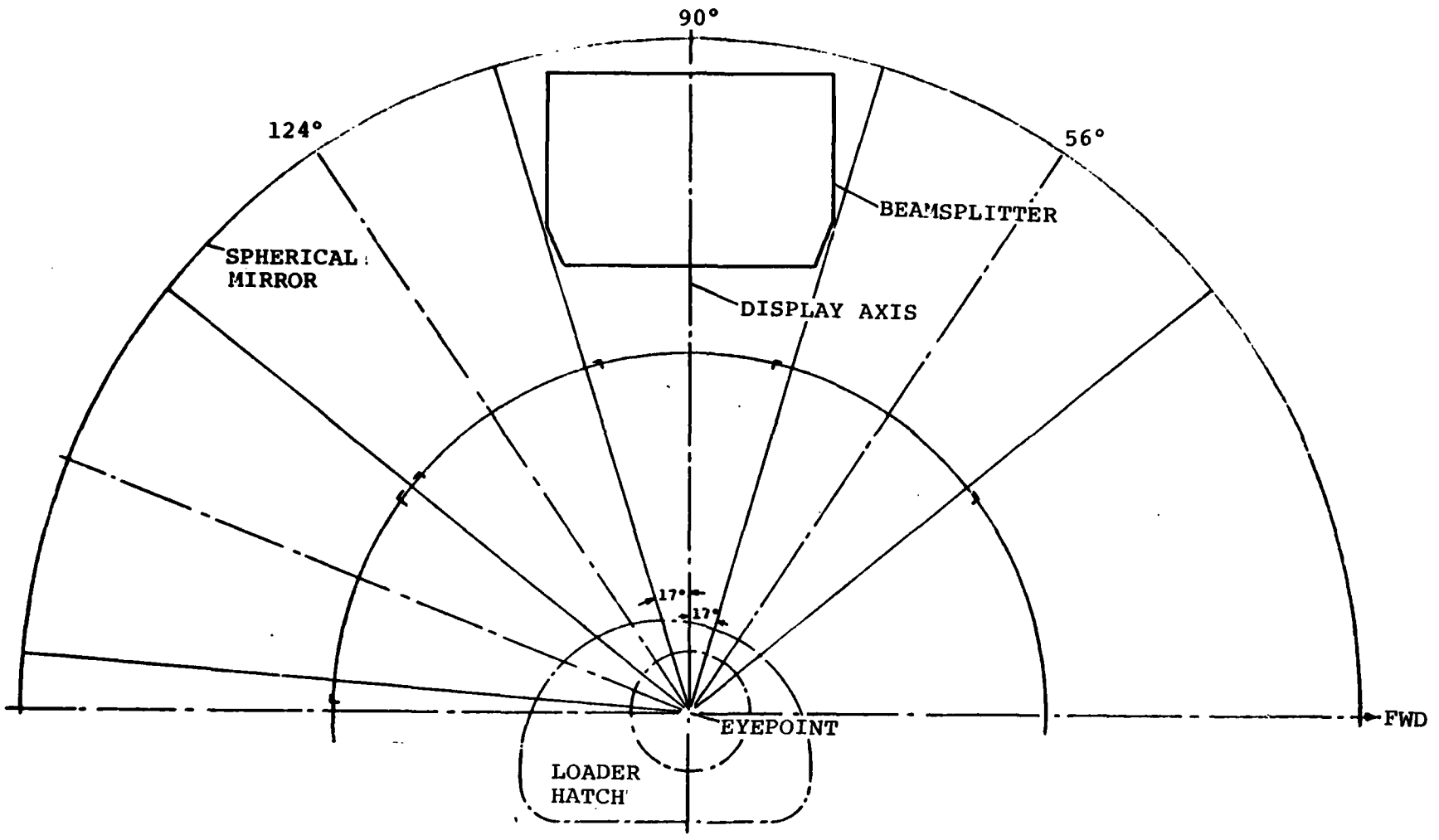

Figure 8-27 WAC Field of View- 4 Elements

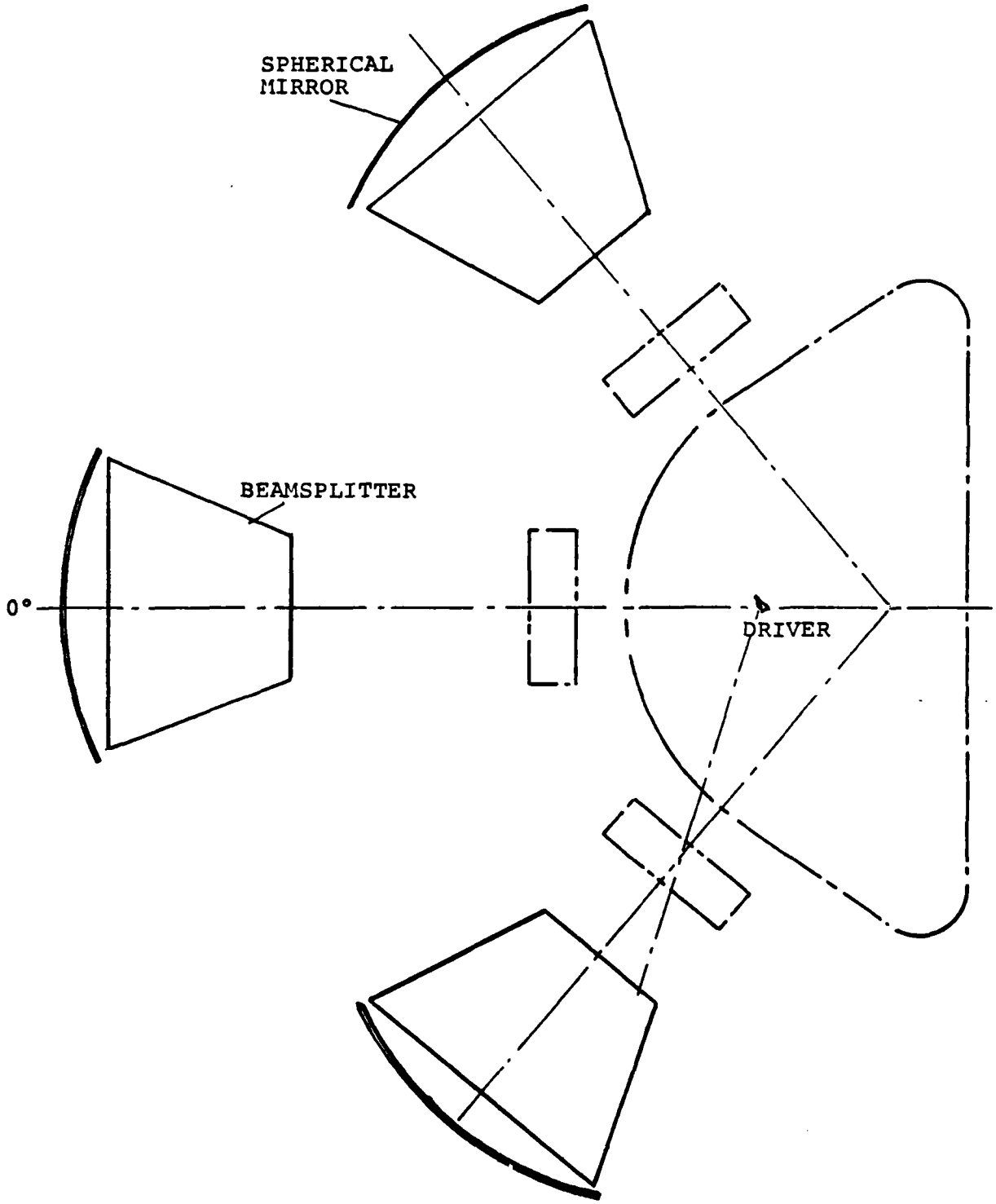

Figure 8-28 Driver's WAC Display Arrangement

Or just this position can be simulated and separate inputs provided to the periscopes etc., but nothing to the vision blocks.

The gun image must be added to the video, otherwise the gun will not be visible in this approach.

This system loses some effectiveness for out-of-the-hatch and closed-hatch viewing due to the complications of the hydraulic lifts and the determination of when the display should be lifted or lowered to follow the eye point.

If the lift is not used, the viewing points must be limited to cracked hatch and buttoned up or just fall out of hatch.

Other limitations are the small up field of 8.5° to 14°. This is not adequate for air threats where at least 30° up is needed.

The large display structure in front of the trainees maybe quite distracting, and this could reduce the training effectiveness of the display.

8.4.1.3.2 Expanded WAC Display Viewing System. The expanded WAC system is another version of the folded beamsplitter WAC display viewing system. It eliminates the vertical field of view restriction of the mirror beamsplitter WAC display by replacing the CRT input image to the eyepiece mirror system with an aerial image. The aerial image is formed by a refractive relay lens from a CRT or screen of conjugate size. A section of the configuration of this system is shown in figure 8-29. The characteristics of the system are shown below. One of the major features of this system is its low transmission loss and relatively small input surface for wide angle display. This permits the use of a low brightness CRT as the input surface, which has much higher resolution than can be obtained with high-brightness projection type inputs. With this configuration,inputs from two or three monocolor CRT's are used to get a full color display. The two-color CRT version is recommended because of simplicity and elimination of potential loss of image quality due to ghosting and the presence of an intermediate image line which may be present due to crossing the dichroic beamsplitters,which combine the colors from the three individual CRT's. At the same time,the two-color system provides a wide range of colors from a brown through white to a green. Thus,it provides the necessary colors, which provide differentiation between objects of similar brightness. It also provides color cues as to the type of surface involved. Color CRTs of the type used in the fundamental mirror beam splitter system cannot be used because of the high angular magnification of the expanded WAC system which make the dots of the color CRT appear very obvious to the eye.

This figure is contained in the drawing pouch at end of volume.

Figure 8-29 Expanded WAC Windows-Driver

Since CRTs are used as inputs for this system, they may be mapped so that there will be no distortion. It also permits obtaining good channel-to-channel registration since the display is collimated. The angle to any point on the scene is independent of the position of the observer within the pupil of the system.

The application of this system to the FCIS is shown in figure 8-29. The recommended parameters of the system are tabulated below:

a)	Pupil cross-section	15 cm
b)	Transmission	6%
c)	Vertical Field of View	45°
d)	Horizontal field of view per section - instantaneous	52.6°
e)	Maximum driver field of view with head motion	105°
f)	Loader, field of view - horizontal	105°
g)	Tank commander, field of view-horizontal	158°

This configuration shows the eyepoints for the tank commander and loader centered about their nominal head positions for out of hatch. The channels assigned to the tank commander are designed to permit using the same channels for out of hatch, periscope, and vision blocks. Thus, the field of view for each vision block is relayed via beamsplitters to look directly at the same display that provides the out of the hatch field of view in the same direction. Thus, no additional video channels or display input equipment is required.

Since it would be desirable to provide the same high level of optical acuity and chromanance for the simulated tank optical instruments, it is recommended that a similar two color system be used.

Simulation of the main gun to the loader and tank commander is difficult because its appearance within the field of view and that portion of the background occulted by the gun barrel is different to each man. The background occulted would also vary as a function of the head position of each man as he moves about within his position. The position of the gun, relative to the scene behind it, is relatively unimportant, what is important is the apparent projection of the axis of the gun; that is, its aim relative to the terrain and the line of sight to the target. This requires that all, or a significant portion of the barrel of the gun be visible to the tank commander, so that he may approximately aim the gun

toward the target, thus identifying the target to the gunner. Figure 8-30 shows the relationship of the main gun and the tank commander's machine gun relative to the field of view. This indicates that except for a very depressed line of fire, most of the gun would be within the field of view of the display viewing system. Therefore it would be satisfactory and most economical to provide the gun barrel image within the background image.

However, including the gun barrel image within the background image generator, creates additional problems since the image generator for the loader must be different than that for the tank commander. If the difference in eye point elevation could be ignored and the gun image created by another means, savings in image generator complexity could be realized.

Another obvious solution, and probably the best, is to place a scaled servo controlled three dimensional section of the gun barrel within the display viewing system, ahead of the display input equipment. This would provide a 3-dimensional appearance at the correct viewing distance with automatic occultation of the image behind the gun barrel for any position that the trainee would place his head. This approach, however, will not increase the portion of the gun barrel being seen, since only the portion of the gun within the display field of view would be shown in any case.

The tradeoff therefore, is only one of cost. Since the significance of the 3D presentation is marginal and its speed of response and maintenance difficulties tend to be problem areas, simulation of the gun by this method is difficult. Two different designs and locations of the gun barrel would be required; one for the tank commander and one for the loader. However, many of the details of the designs could be common. If it were desired to use the 3D presentation approach, it would be necessary to accept a colored appearing gun barrel since it would be viewed in one or the other of the colored image paths leading to either of the CRTs. If it were desired to provide a normally colored gun barrel, it would be necessary to have a gun barrel in each of the channels. It would be essentially impossible to drive these together to provide a single combined image. The 3D approach therefore appears impractical for this application.

8.4.1.4 Refractive Devices. In these approaches, refractive devices could provide the simulation of the laser rangefinder, gunner's articulated telescope, commander's binoculars, and the gunner's and commander's periscopes. Both periscopes provide a 1X window, a powered visual sight, and a powered passive night vision sight.

This figure is contained in the drawing pouch at end of volume.

Figure 8-30 Expanded WAC Windows -Tank Commander/Loader

An approach that was considered for the simulation of these devices was to view the scene projected onto the dome through the operational hardware, (GFE). Targets would be projected onto the dome, where they would be superimposed on the background image. An observer, viewing the scene without powered instruments, would be alerted to the existence of a target by such cues as a cloud of dust, puff of smoke, or gun flash, which would momentarily be visible in the background image. Upon looking at the screen with powered optical instruments, the target (which could be of a size and contrast that could not be discerned by the naked eye) would become visible. This approach would save the expense of CRT's, special optical parts to project the image onto the appropriate eyepieces and separate DIG video generators for gunner and commander. Offset against the cost of the target projector, these economics provide a net cost saving, if a single target projector will suffice. However, since several targets in widely separated parts of the field of view are desirable, the cost of several target projectors would make this scheme uneconomical. An alternative to this approach is to generate imagery with small CRT's relayed by lenses into the appropriate eyepieces. These would provide high resolution, as a 1000 -line raster format can be packed into the field of view of the instruments. All reticles would be generated by the DIG and formed on the same CRT as the imagery. This provides for scoring of all aiming without calibration procedures. The commander's boresight deflection and elevation control knobs would drive encoders which would provide inputs to computer generation of these reticles. The gunner's filter selector knob,on the 8X visual sight, will operate a switch which will signal the DIG to change the color of the imagery. The imagery appropriate to the sight in use will be requested from the DIG by micro switches on the eyepiece headrests, or in the case of the passive night vision system, the "power-on" switches. A switch must also be provided on the binoculars. If no switch is actuated, the use of the unity power windows will be assumed.

The imagery for all instruments usable by the gunner can be generated in color by a red, blue, and green trio of monochrome CRT's combined by a solid glass dichroic cube (see Figure 8-31). A rotating mirror, at 45° to a vertical rotation axis, (shown in position for unity power viewing) directs the emerging light to the appropriate path for viewing through the telescope, 8X visual, unity power, or passive night visual systems. The support bearing for the rotating mirror would be directly below it.

The CRT's would be 3-inch diameter, with a 2.62-inch diameter screen. To provide the 30° 32' by 5° 48' FOV, of the unity power sight, the CRT face must represent a 31.08° diagonal.

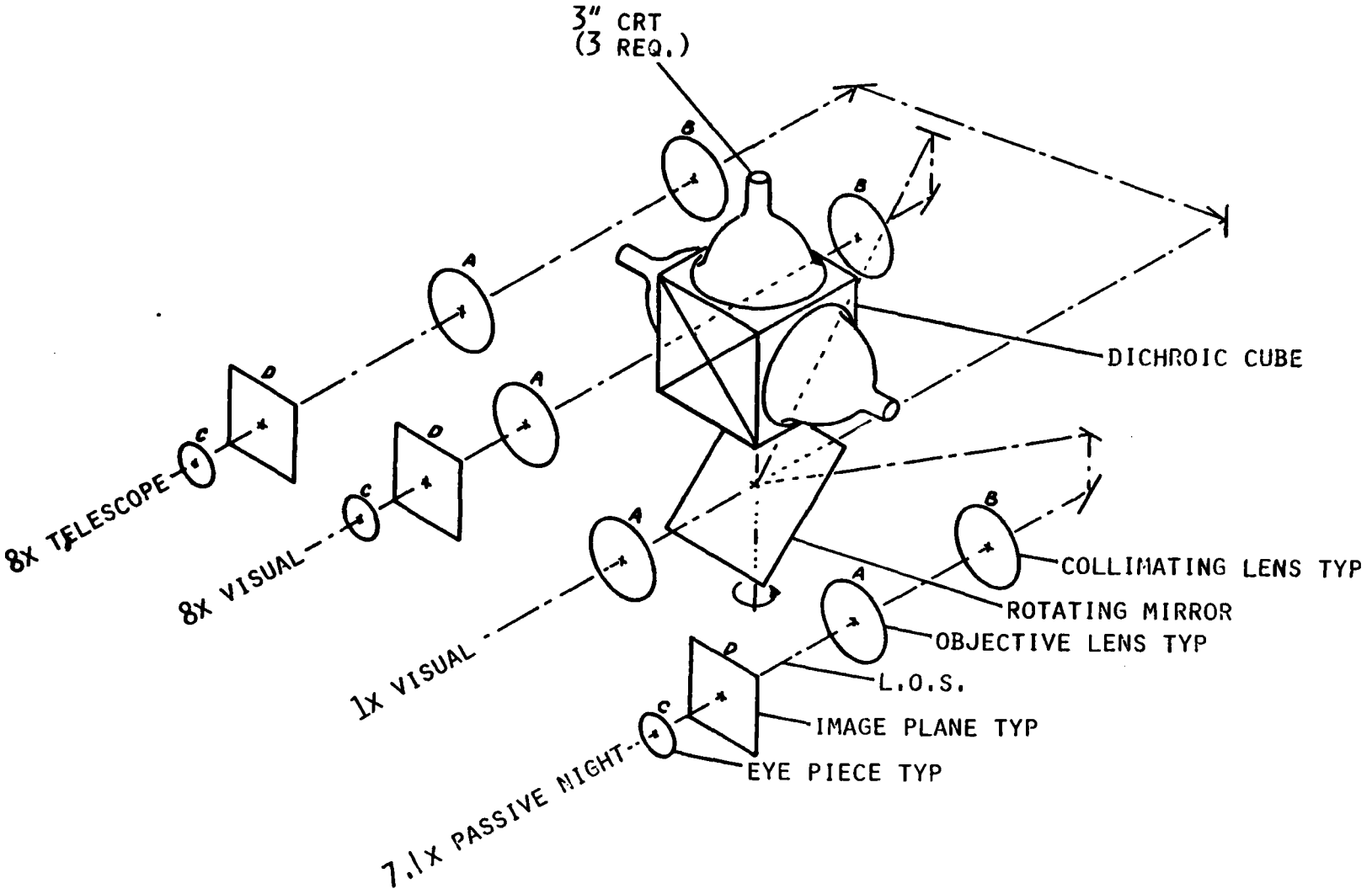

Figure 8-31 Optical Layout for Powered Sights

The infinity image viewing lens must have a focal length given by

$$f = \frac{D}{2 \tan \left(\frac{fov}{2}\right)}$$

where D is the screen diameter. For the above FOV and diameter f=3.71 inches. This puts path length at a premium for the unity power optical path. For this reason, the dichroics were combined into a cube (which reduces optical path length, but is more expensive than going through two flat plate dichroic mirrors). The 3-inch dichroic cube can be made of glass (index 1.744(LaF-2)), which reduces its effective path length to 3"/1.744 or 1.72 inches. The path length required for the rotating mirror can be kept to about 2.25 inches by taking into account the fact that the vertical field is much smaller than the horizontal field. This allows about 3/4-inch for protrusion of the lens apex beyond the lens principal plane. In short, there is sufficient optical path clearance, but none to spare.

The powered instruments have much longer path lengths. These optical paths will extend into the available space behind the periscope housing. The focal length of each collimating lens can be calculated, knowing the appropriate FOV. The objective lenses are chosen to give the appropriate magnifications with the operational (GFE) eyepieces. The objective focal length is the focal length of the eyepiece multiplied by the magnification. In the case of the 8X visual periscope sight, the operational objective lens (GFE) will be used.

In the case of the commander's unity power sight, the FOV (60° X 28°) is too large to provide collimated viewing of dichroically combined CRT's (as should be clear from the above path-length calculation for the gunner's periscope). The CRT trio will be removed to a remote location behind the periscope, leaving room for the two-mirror periscope of the operational unity power system to view the scene projected on the screen. Fortunately (since we are not using a CRT), there is no reticle to be simulated in this window. One method of providing a separately generated unity power imagery is the use of a shadow mask tube (which saves the path length used by the dichroics, but has the disadvantage that at the large FOV, the individual phosphor dots would be resolvable). Another method is collimation of an image projected onto a transmission screen by a separate GE light valve (expensive!). Finally, the gunner could be given a duplicate of the gunner's unity power window (incidently, the wide field of view provided by direct screen viewing is probably more valuable than the increased resolution available in the smaller field). The 8X visual sight and passive night vision sight would be relayed from a CRT trio as in the gunner's periscope, but with different physical placement of the optical paths. In place

of the path to the 8X telescope, a lens would image the CRT's onto the end of a fiber optic cable which would lead to the commanders binoculars. The long path lengths available in these systems allows the use of a dichroic table using two flat-plate dichroic mirrors, as used in color TV cameras, thus saving cost over the use of a dichroic cube.

At the other end of the fiber optic cable for the binoculars, the optical system shown in Figure 8-32 will be used. A cable with 10 micron fibers providing for a 3/4 inch circular image of the CRT's will be adequate, and permit a reasonable focal ratio for the collimating lens when filling the objective lens of a typical binocular. The previous equation, can again be used; where D now represents the diameter of the image at the output of the cable. If, for example, the FOV is 385 yards at 1000 yards, one may substitute for the factor 2 tan (FOV/2) the ratio 385/1000, or 0.385. The output of the collimating lenses are fed into the objective lenses of two separated halves of a standard pair of binoculars, which are rotated about the objective lens cells to provide adjustment of interocular distance. The two halves are linked by gearing so that the rotations of the two halves are equal and opposite.

The major problem to be solved with binoculars is determining the commander's viewing point. One workable scheme places a special helmet on the commander's head, the orientation of which is tracked by an electromagnetic sensing system. This, unfortunately, is very expensive, and would require recalibration by the helmet manufacturer's representative whenever the 'status-quo' of electromagnetic environment changed.

Another scheme is illustrated in Figure 8-33. In this case, a pantograph similar to that used for a draftsman's fluorescent lamp, swings from an overhead azimuth axis, and supports the binoculars on a three-axis gimbal at the free end of the pantograph. Shaft encoders on the three vertical axes and on the pitch axis would provide the viewing attitude, while allowing six degrees of head-motion freedom. When not in use, the pantograph would be pushed up, engaging a magnetic latch, located behind the commander's head, and locked in a position that would not obstruct his view.

A third scheme is promising, but has not been explored sufficiently at this time to verify its feasibility. Infrared light in a narrow wave length band could be projected onto the screen by lenses mounted on the binoculars forming two dots; one of which would be located vertically above the other when the binoculars are held level. A wide-angle lens, looking through a narrow band optical filter, mounted behind the commander's head would image the whole FOV onto an image tube. Scanning the tube would locate the dots in the image, and with this information, the computer could determine the

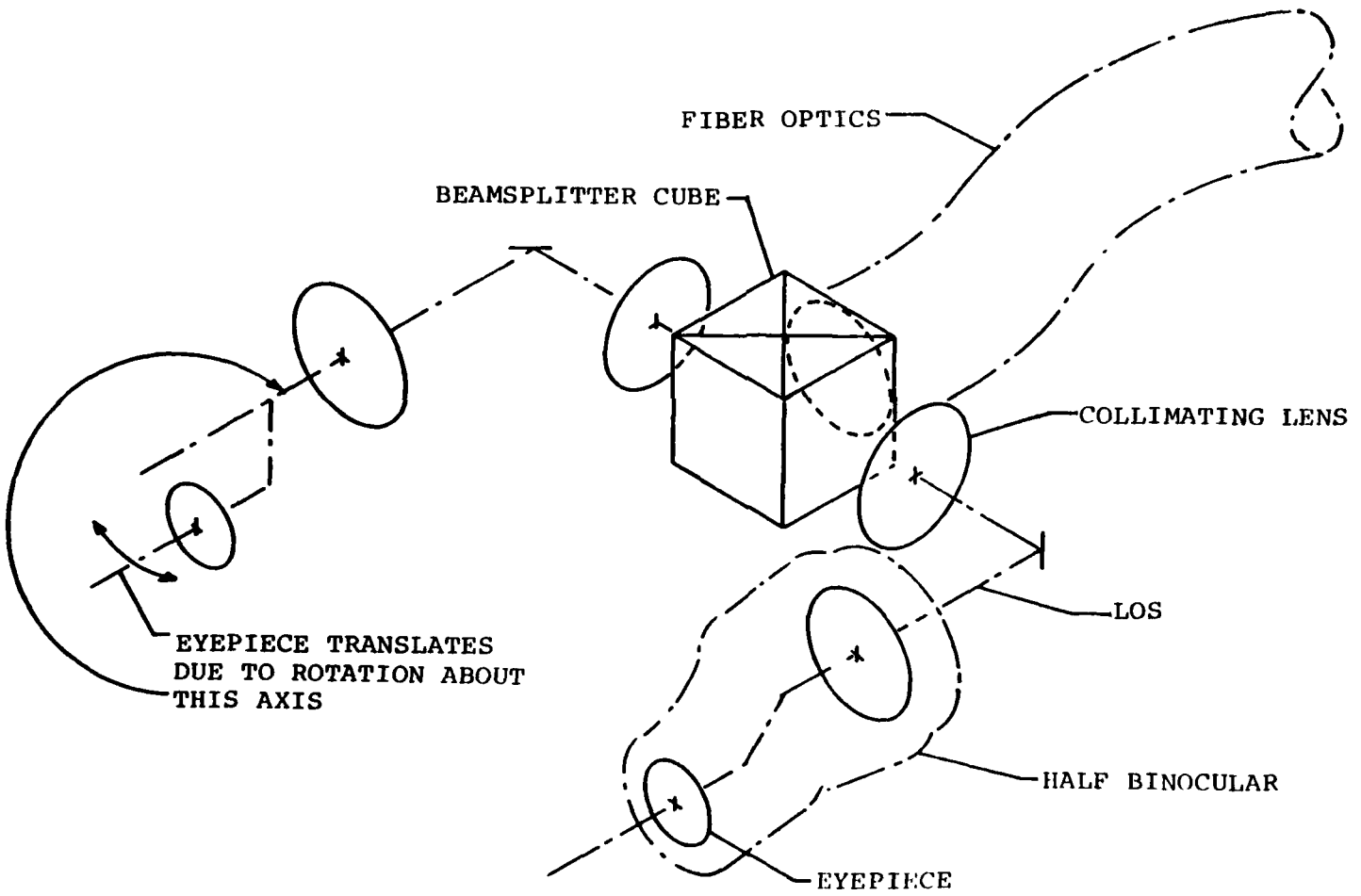

Figure 8-32 Optical Layout for Binoculars

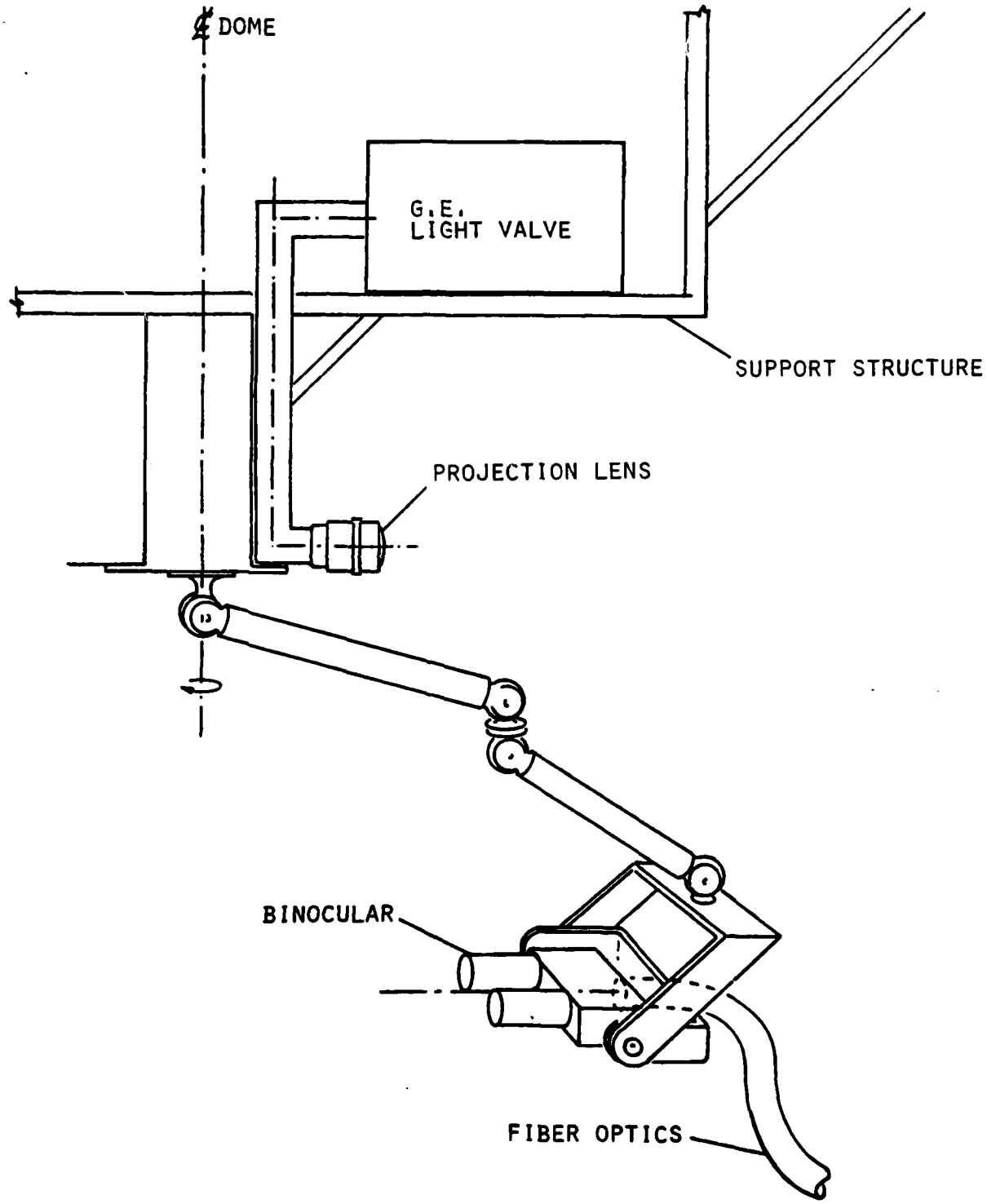

Figure 8-33 Binocular Pantograph Arrangement

commander's viewing point and roll axis orientation. Since the suppliers of fiber optic cables make them up in a rectangular format, (and we need a circular format for the binocular images) the corners of the format are available for transmission of the infra-red light.

The laser rangefinder could be provided with its own trio of CRT's, which could be combined with flat-plate dichroics and relayed into the image plane viewed by the rangefinder eye lens.

8.5 Visual System Tradeoff Analysis

8.5.1 Image Generation. Previous sections described the visual subsystems investigated for possible use on the FCIS-LM device. These subsystems were classified into image generation systems and image display systems, which are composed of the display input devices and the display viewing systems. From these subsystem analyses,a total system must be configured and compared as to relative performance and cost. However, not all of the subsystem components were found to be applicable to the M60A3 tank training problem. For each subsystem, tradeoffs must be performed to select those approaches which will lead to acceptable performance.

In the image generator area, 5 system approaches were considered:

1. Film Systems
2. Camera/Model Systems
3. DIG Systems
4. Camera/Model and Film Systems
5. Camera/Model and DIG Systems

Earlier sections also evaluated and compared the performance and relative costs of the various image generators and concluded that the DIG system was the only image generator acceptable within the cost constraints and system performance requirements of the FCIS-LM device.

8.5.2 Image Display Systems. In the display device area, a number of devices offer acceptable performance. The devices considered were:

1. Hughes Liquid Crystal Light Valve
2. General Electric Oil Deformographic Light Valve
3. Philco - Ford CRT Projector
4. Shadow Mask CRT
5. Two-Color Large CRT
6. Three-Color Small CRT Monitor Assemblies

The small three-color CRT assemblies were only considered for optical instrument simulation. Their compactness and full color capability made them the ideal solution to that part of the visual system problem. Therefore, the subsystem described in section 8.2.1.5 was chosen for inclusion in the FCIS system.

The display devices for the background can be grouped into projection types and CRT types. Each type has its own advantages.

The projection devices would be used in connection with a screen to reproduce the out of hatch scene. If this were done, both the loader and tank commander would be able to work out of the hatch simultaneously and therefore the loader could be trained to perform the reconnaissance function he is "normally assigned"

in the actual tank. This capability would allow emphasis on the "full view" aspect of the training by allowing each man to actively participate in the training mission.

Additionally, a projection system permits wider FOV's to be achieved. Full 360° can be offered and vertical FOV's can be established to permit adequate training against air threats.

A third advantage of projection devices is that they allow relatively large amounts of head movement, so that cracked hatch, out of the hatch, and in the hatch viewing functions can all be performed by both the loader and the commander.

The performance criteria for the projection devices were as follows:

1. Brightness
2. Image Quality
3. Mappability
4. Resolution
5. Modulation - frequency characteristics at 11 arc minutes

The criteria are, for the most part, self explanatory but image quality deserves some elaboration. In image quality, a number of factors were lumped together. These included such factors as distortion in the display, color registration and contrast ratio.

The relative importance of these characteristics varies with the choice of viewing device (e.g. large dome, flat screens, etc.). For this reason, the viewing systems were considered first, and then the display input devices were matched to the viewing systems selected.

The viewing systems capable of being married with the projection devices were

1. Flat screens
2. Large facility dome
3. Medium dome
4. Small dome on motion system

The performance criteria used in the selection of the display viewing systems were brightness capability, brightness full off, screen discontinuities and capacity for mapping functions.

The first three of these criteria are self explanatory, the requirement for mapping was considered a measure of how critical it would be to have optical or electronic mapping in the visual system. A high efficiency factor for this criteria indicates that mapping would not be required in the visual system.

Table 8-13 details the tradeoff process for the 4 display devices. Flat screens are rated low on performance because of the combination of brightness and brightness fall off problems, and because of the difficult problem in removing scene discontinuities at the joints of the screens.

The three domes all yield about the same performance. Differences occur in brightness where the smaller domes yield brighter pictures and in the requirement for mapping. The large dome, because of its size, would require only small amounts of mapping, since the angles formed from the projectors to the screens and back to the eye are so small that mapping requirements would be minimal.

If a medium sized dome is used, the mapping requirements become most severe. This is because the visual system must compensate for both static and dynamic distortion errors. The static errors arise from the fact that the projectors and eyepoints are not at the same location. More importantly, however, are the dynamic distortion errors introduced by motion of the eyepoint caused by the motion system, relative to the fixed projector position. The dynamic errors are considered more distracting in that they would cause "swimming" in the scene and these errors would be most objectionable and could, if severe, cause nausea.

The small dome, since both it and the projectors are mounted on the motion system, has no dynamic distortion errors. It does however have static errors more severe than those found in the other two domes.

In the area of procurement cost, the large facility dome was given a large advantage since it eliminates a large portion of the actual facility cost. In all other areas (not performance related) the three domes are rated about equal. The medium sized dome does have slightly less system compatibility because of the interface problem with the motion system, and the maintainability of the small dome was rated slightly lower because of the problems involved with cleaning a dome mounted on a motion system.

The numbering scheme used on all visual tradeoff analyses were as follows:

Weighing Factor

.1 .2 .3	.4 .5 .6 .7	.8 .9 1.0
Desirable	System Requirement	Critical to System Concept

Efficiency Factor EF

1	2 3	4 5 6	7 8 9	10
Poor Perf.	Marginal Perf.	Meets Minimum Requirements	Meets Design Goals	Exceeds Design Goals

The result of the tradeoff analysis indicates that the flat screen should no longer be considered for use on FCIS. All dome configurations are potential candidates. To determine which dome system should be used, it is first necessary to configure each system with the appropriate display input devices.

Table 8-14 is a tradeoff of the 3 projector type systems for use on the large facility dome. It shows that the GE light valve gives superior performance and is less expensive and risky than the other 2 systems. Thus GE light valves would be used in the large dome system.

Table 8-15 is a similar tradeoff for the medium sized dome. In this tradeoff the significance of a mappable system is increased. The result, however, is not as clear cut as the previous tradeoff. If the GE system is used, there will be dynamic distortion, however if either of the others is used, there is both a risk and cost problem. Since the study showed that the amount of dynamic distortion in this configuration would be annoying but tolerable, and since there is quite a big price discrepancy, the GE light valve was again the choice.

Table 8-16 is the tradeoff for the small dome on the motion system. In this configuration, brightness and the mapping requirement are diminished since the dome is smaller and there is no relative motion between the eyepoint and the projectors. Again the GE light valve is selected primarily on the basis of cost and risk.

Once the projectors have been selected for each of the three domes, the tradeoff between the three systems can be accomplished. The performance criteria for this selection was:

Brightness
Resolution at 20% MTF
Perspective Errors
Distortion

The tradeoff (Table 8-17) showed that the domed facility would have a small advantage over the small dome system and that the medium sized dome should be eliminated from consideration.

TABLE 8-13 TRADEOFF ANALYSIS CHART-VISUAL DISPLAY VIEWING DEVICES

	TRADE-OFF PARAMETERS AND SELECTION CRITERIA	WEIGHTING FACTOR	FLAT SCREEN		LARGE FACILITY DOME		MEDIUM SIZE DOME		SMALL DOME ON MOTION			
			EF	FM	EF	FM	EF	FM	EF	FM	EF	FM
PARAMETERS	PERFORMANCE PARAMETERS											
	• BRIGHTNESS	.7	5	3.5	5	3.5	7	4.9	9	6.3		
	• BRIGHTNESS FALL OFF	.5	2	1.0	6	3.0	7	3.5	8	4.0		
	• SCREEN DISCONTINUITIES	.6	1	.6	10	6.0	10	6.0	10	6.0		
	• REQUIREMENT FOR MAPPING	.5	3	1.5	8	4.0	4	2.0	6	3.0		
	•											
	PERFORMANCE SUMMATION			6.6		16.5		16.4		19.3		
CRITERIA	OVERALL PERFORMANCE											
	LOW PROCUREMENT COST	.8			10	8	6	4.8	5	4.0		
	LOW OPERATING COST											
	SIMPLICITY	.2			6	1.4	7	1.4	6	1.2		
	RELIABILITY	.5			7	3.5	7	3.5	7	3.5		
	MAINTAINABILITY	.3			6	1.8	7	2.1	5	1.5		
	SYSTEM COMPATABILITY	.6			6	3.6	4	2.4	7	4.2		
	SYSTEM FLEXIBILITY	.5			6	3.0	5	2.5	6	3.0		
	PRODUCIBILITY/AVAILABILITY	.5			5	2.5	6	3.0	6	3.0		
	SAFETY ASPECTS											
	OVERALL SUMMATION					40.1		36.1		39.7		
	APPROACH REJECTION/SELECTION											

TABLE 8-14 TRADEOFF ANALYSIS CHART-VISUAL DISPLAY INPUT DEVICES-LARGE DOME

	TRADE-OFF PARAMETERS AND SELECTION CRITERIA	WEIGHTING FACTOR	LIQUID CRYSTAL LIGHT VALVE		GE LIGHT VALVE		CRT PROJECTOR					
PARAMETERS	PERFORMANCE PARAMETERS		EF	FM	EF	FM	EF	FM	EF	FM	EF	FM
	• IMAGE QUALITY	.9	1	.9	7	6.3	5	4.5				
	• MAPPABILITY	.2	10	2.0	1	.2	10	2.0				
	• RESOLUTION	.6	6	3.6	6	3.6	6	3.6				
	• MODULATION	.6	9	5.4	7	4.2	5	3.0				
	• BRIGHTNESS	.7	6	4.2	7	4.9	7	4.9				
	PERFORMANCE SUMMATION			16.1		19.2		18				
CRITERIA	OVERALL PERFORMANCE											
	LOW PROCUREMENT COST	.9	3	2.7	7	6.3	3	2.7				
	LOW OPERATING COST											
	SIMPLICITY	.5	7	3.5	5	2.5	6	3.0				
	RELIABILITY	.8	7	5.6	6	4.8	4	3.2				
	MAINTAINABILITY	.8	7	5.6	6	4.8	4	3.2				
	SYSTEM COMPATABILITY	.7	8	5.6	8	5.6	8	5.6				
	SYSTEM FLEXIBILITY	.4	7	2.8	7	2.8	7	2.8				
	PRODUCIBILITY/AVAILABILITY	.7	1	.7	9	6.3	5	3.5				
	SAFETY ASPECTS											
	OVERALL SUMMATION			42.6		52.3		42.0				
	APPROACH REJECTION/SELECTION		REJECT		SELECT		REJECT					

TABLE 8-15 TRADEOFF ANALYSIS CHART-VISUAL DISPLAY INPUT DEVICES-MEDIUM DOME

	TRADE-OFF PARAMETERS AND SELECTION CRITERIA	WEIGHTING FACTOR	LIQUID CRYSTAL LIGHT VALVE		GE LIGHT VALVE		CRT PROJECTOR					
			EF	FM	EF	FM	EF	FM	EF	FM	EF	FM
PARAMETERS	PERFORMANCE PARAMETERS											
	• IMAGE QUALITY	.9	1	.9	7	6.3	5	4.5				
	• MAPPABILITY	.9	10	9.0	1	.9	10	9				
	• RESOLUTION	.6	6	3.6	6	3.6	6	3.6				
	• MODULATION	.6	9	5.4	7	4.2	5	3.0				
	• BRIGHTNESS	.5	6	3.0	7	3.5	7	3.5				
	PERFORMANCE SUMMATION			21.9		18.5		23.6				
CRITERIA	OVERALL PERFORMANCE											
	LOW PROCUREMENT COST	.9	3	2.7	7	6.3	3	2.7				
	LOW OPERATING COST											
	SIMPLICITY	.5	7	3.5	5	2.5	6	3.0				
	RELIABILITY	.8	7	5.6	6	4.8	4	3.2				
	MAINTAINABILITY	.8	7	5.6	6	4.8	4	3.2				
	SYSTEM COMPATIBILITY	.7	8	5.6	8	5.6	8	5.6				
	SYSTEM FLEXIBILITY	.4	7	2.8	7	2.8	7	2.8				
	PRODUCIBILITY/AVAILABILITY	.7	1	.7	9	6.3	5	3.5				
	SAFETY ASPECTS											
	OVERALL SUMMATION			48.4		51.6		47.6				
	APPROACH REJECTION/SELECTION		REJECT		ACCEPT		REJECT					

TABLE 8-16 TRADEOFF ANALYSIS CHART-VISUAL DISPLAY INPUT DEVICES-SMALL DOME

	TRADE-OFF PARAMETERS AND SELECTION CRITERIA	WEIGHTING FACTOR	LIQUID CRYSTAL LIGHT VALVE		GE LIGHT VALVE		CRT PROJECTOR					
			EF	FM	EF	FM	EF	FM	EF	FM	EF	FM
PARAMETERS	PERFORMANCE PARAMETERS											
	• IMAGE QUALITY	.9	1	.9	7	6.3	5	4.5				
	• MAPPABILITY	.2	10	2.0	1	.2	10	2.0				
	• RESOLUTION	.6	6	3.6	6	3.6	6	3.6				
	• MODULATION	.6	9	5.4	7	4.2	5	3.0				
	• BRIGHTNESS	.4	6	2.4	7	2.8	7	2.8				
	PERFORMANCE SUMMATION			14.3		17.1		15.9				
CRITERIA	OVERALL PERFORMANCE											
	LOW PROCUREMENT COST	.9	3	2.7	7	6.3	3	2.7				
	LOW OPERATING COST											
	SIMPLICITY	.5	7	3.5	5	2.5	6	3.0				
	RELIABILITY	.8	7	5.6	6	4.8	4	3.2				
	MAINTAINABILITY	.8	7	5.6	6	4.8	4	3.2				
	SYSTEM COMPATABILITY	.7	8	5.6	8	5.6	8	5.6				
	SYSTEM FLEXIBILITY	.4	7	2.8	7	2.8	7	2.8				
	PRODUCIBILITY/AVAILABILITY	.7	1	.7	9	6.3	5	3.5				
	SAFETY ASPECTS											
	OVERALL SUMMATION		40.8		50.2		39.9					
	APPROACH REJECTION/SELECTION		Reject		Select		Reject					

TABLE 8-17 TRADEOFF ANALYSIS CHART-VISUAL DISPLAY SUBSYSTEMS

	TRADE-OFF PARAMETERS AND SELECTION CRITERIA	WEIGHTING FACTOR	FACILITY DOME GE LIGHT VALVE		MEDIUM DOME GE LIGHT VALVE		SMALL DOME GE LIGHT VALVE					
			EF	FM	EF	FM	EF	FM	EF	FM	EF	FM
PARAMETERS	PERFORMANCE PARAMETERS											
	• BRIGHTNESS	.7	5	3.5	6	4.2	8	5.6				
	• RESOLUTION AT 20% MTF	.8	7	5.6	7	5.6	7	5.6				
	• DISTORTION	.7	5	3.5	2	1.4	6	4.2				
	• PERSPECTIVE ERRORS	.5	8	4.0	7	3.5	6	3.0				
	•											
	PERFORMANCE SUMMATION			16.6		14.7		18.4				
CRITERIA	OVERALL PERFORMANCE											
	LOW PROCUREMENT COST	.9	10	9.0	6	5.4	5	4.5				
	LOW OPERATING COST											
	SIMPLICITY	.6	6	3.6	7	4.2	6	3.6				
	RELIABILITY	.8	7	5.6	7	5.6	7	5.6				
	MAINTAINABILITY	.7	6	4.2	7	4.9	5	3.5				
	SYSTEM COMPATABILITY	.7	5	3.5	3	2.1	8	5.6				
	SYSTEM FLEXIBILITY	.7	6	4.2	5	3.5	6	4.2				
	PRODUCIBILITY/AVAILABILITY	.6	5	3.0	6	3.6	6	3.6				
	SAFETY ASPECTS											
	OVERALL SUMMATION			49.7		44.0		49.0				
	APPROACH REJECTION/SELECTION		Rejected for Prototype		Rejected		Selected					

It is assumed that the U S Army will have a facility to place the first system, and since they may desire to experiment with the capabilities of the dome system prior to committing to the domed facility, it was decided that the small dome would be the proper selection at this time. Production units of the FCIS may very well change to the domed facility approach in order to reap the life cycle cost benefits of this approach.

However, an additional consideration affects the final system configuration selection. Due to cost constraints on the prototype design, it appears feasible to limit the field of view for the tank commander and loader to 180°, a figure that Link human factors experts indicate as being the minimum acceptable. This saves money for expansion features such as DIG video generators, projectors, optics and even a second DIG system if more edges are required.

At the same time, the driver required at least a 90° horizontal field of view and in many circumstances, his 90° would not coincide with any portion of the commander's scene.

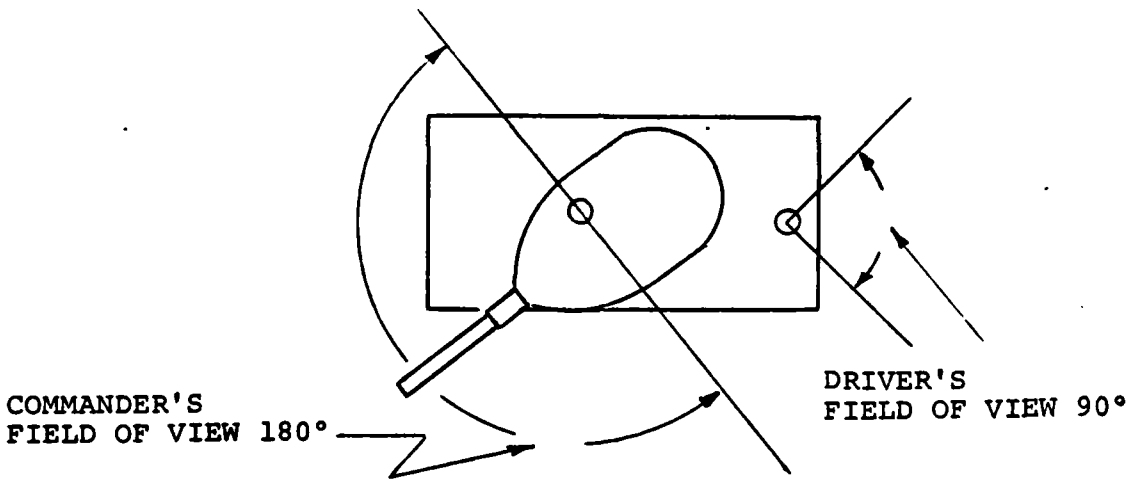

To solve this problem would require two separate crew stations, each with its own display viewing device. Although this would at first glance appear to offset the increased price due to projectors and DIG video generators, the two crew station approach has some advantages:

1. It is cheaper than adding an additional 180° to a single motion system configuration and the two stations on one motion platform would suffer from perspective errors since the driver, commander and loader would all view the scene from different eyepoints.

2. It provides a more flexible configuration, in that it provides two crew training devices.

3. It allows better motion simulation.

For all these reasons, the two crew station configuration was selected.

Based on these tradeoffs, a dome based system was configured and studied as part of the study program. This concept is defined in detail in the appropriate section.

Layout diagrams of all the dome configurations can be found in the drawing pouch at the end of the report.

8.5.3 Collimated Display Systems. Two types of collimated viewing systems were considered:

1. Wide Angle Collimation (WAC) windows
2. Expanded WAC windows

Additionally, two display input devices were addressed:

1. Shadow Mask CRT
2. Two Color CRT System

The collimated systems present a number of advantages. In general, they are cheaper to configure than the projection systems on a channel by channel basis. Secondly, they offer better resolution and in the case of the two color CR7 system, better MTF. Finally, they allow total mapping and virtually eliminate all distortion problems.

The WAC window will only work with the shadow mask CRT, and the expanded WAC will work best with the two color CRT arrangement.

The criteria used for comparing the performance of these two systems are FOV, resolution at 20% MTF, brightness and exit pupil.

Table 8-18 details the tradeoff between the WAC and expanded WAC approach. As the table shows, the WAC windows offer very limited FOV and poorer resolution than can be obtained from the expanded WAC approach.

All other considerations are about equal and for this reason, the expanded WAC configuration was selected for the FCIS.

Layout diagrams of both the WAC window system configuration and the expanded WAC configuration can be found in the drawing pouch at the end of this report.

See Figure 8-34 for tank commander's dome display. See Figure 10-35 for driver's dome display.

TABLE 8-18 TRADEOFF ANALYSIS CHART-VISUAL COLLIMATED DISPLAY SUBSYSTEMS

	TRADE-OFF PARAMETERS AND SELECTION CRITERIA	WEIGHTING FACTOR	WAC AND SHADOW MASK		EXPANDED WAC AND TWO COLOR CRT							
	PERFORMANCE PARAMETERS		EF	FM	EF	FM	EF	FM	EF	FM	EF	FM
PARAMETERS	• FOV	.9	2	1.8	6	5.4						
	• RESOLUTION AT 20% MTF	.7	7	4.9	9	6.3						
	• BRIGHTNESS	.5	7	3.5	7	3.5						
	• EXIT PUPIL	.7	5	3.5	4	2.8						
	•											
	PERFORMANCE SUMMATION			13.7		18						
CRITERIA	OVERALL PERFORMANCE											
	LOW PROCUREMENT COST	.9	6	5.4	6	5.4						
	LOW OPERATING COST											
	SIMPLICITY	.6	5	3.0	5	3.0						
	RELIABILITY	.8	5	4.0	6	4.8						
	MAINTAINABILITY	.7	6	4.2	6	4.2						
	SYSTEM COMPATABILITY	.7	5	3.5	5	3.5						
	SYSTEM FLEXIBILITY	.7	5	3.5	5	3.5						
	PRODUCIBILITY/AVAILABILITY	.6	8	4.8	6	3.6						
	SAFETY ASPECTS											
	OVERALL SUMMATION			42.1		46						
	APPROACH REJECTION/SELECTION		REJECTED		SELECTED							

These figures are contained in the drawing pouch at the end of this volume.

8-34 Tank Commander's Display - 14' Dome
8-35 Tank Driver's Display - 14' Dome

8.6 Development of Selected Approach

8.6.1 DIG - Expanded WAC System

The DIG-Expanded WAC visual system approach is configured from basic subsystems previously defined. The objectives of this system are to capitalize on image quality merits of the expanded WAC system to:

a. Provide increased image

b. Permit growth to provide increased system resolution.

c. Eliminate distortion.

d. Provide improved image continuity across channel

e. Provide somewhat increased resolution

f. The displays provide a collimated image

g. Provide a large degree of flexibility useful for a laboratory model

The major tradeoffs involved were:

a. The maximum clockwise FOV for the loader is the counter clockwise FOV for the TC or about 14°. The FOV for the loader and tank commander (TC) are each about 240° horizontal by 50° vertical.

b. The pupil is limited to about 15 cm (± 7.5 cm) normal to any line of sight and 30 cm (± 15) along the line of sight.

c. The limitation of vertical FOV 45°.

d. The turret crew trainer system, accommodating the TC, gunner and loader, is on one motion system, with the visual system mounted thereon. The driver trainer system and its visual system are all mounted on another motion system. The layouts are shown in Fig. 8-29, 8-30 The systems provide for out of hatch, binocular, cracked hatch and vision block viewing, together with displays through all periscopes and optical systems.

The recommended performance parameters are shown in the Performance Summary Table below.

The mechanical layout of the driver is similar to, but less complex than that of the turret training station. It has only

two display channels rather than five on the turret training station (2 per loader) (3 per tank commander). Other differences are evident by examination of the system layout drawing Figure 8-29 and the system block diagram Figure 8-36. The details of the design are identical. The performance of all displays are shown in the system performance summary table. The image content is identical except that the eyepoint is lower for the driver. When the driver operates in a closed hatch mode using his vision blocks, the image is the same as when it is viewed out of the hatch. When the night driving device is used, the image generated by the DIG equipment is changed to look like the scene through the night driving periscope M24 or VVS2. It is intended that the periscope housing will be modified so that the driver looks at the modified out of the hatch scene via a simple mirror relaying arrangement in place of the image intensifier. Therefore the field of view will be as in the periscope. The unique image will be simulated via the DIG and the display equipment. The design of the turret station is described below.

The tank commander's 1X display is provided by a mosaic of 3 expanded WAC display systems, fed by 3 video generators. They provide a continuous display 14° counterclockwise to 143.8° clockwise relative to the forward direction of the turret. (See Figure 8-30). The vertical FOV is limited to 45° to maximize the image sharpness and density. The eyepoint is centered about the TC's out of the hatch position. The image is transferred via beam splitters to the TC's 1X periscope and cupola vision blocks. The lower mirror-beamsplitters for this, shown in Figure 8-30, are also mounted on the turret. The vision block and cupola radius on further to the left of the TC's periscope are on a larger radius from the cupola axis than the rest of the blocks, the configuration of the tank cupola is modified slightly in this area to minimize the increase in radius. The object of this is to decrease size of the spherical collimating eyepiece mirrors and the complexity of the relay lens.

Cupola rotation effects are provided by physical rotation of the cupola housing. Turret rotation is simulated in the visual display by moving the scene content with the DIG. The image when viewed by the 1X channel of the TC's periscope could have been slewed by vertically to track the simulated LOS of the TC's periscope. However, this would have resulted in also changing the image when viewed thru the vision blocks. This was considered undesireable, therefore, the display was not moved and the displayed image was scanned by the actual periscope equipment. The image for the binoculars is provided by one of the video generators normally assigned to the TC's out of the hatch displays. The channel furthest away from the binoculars LOS will be used. This will permit simultaneous presentation of the

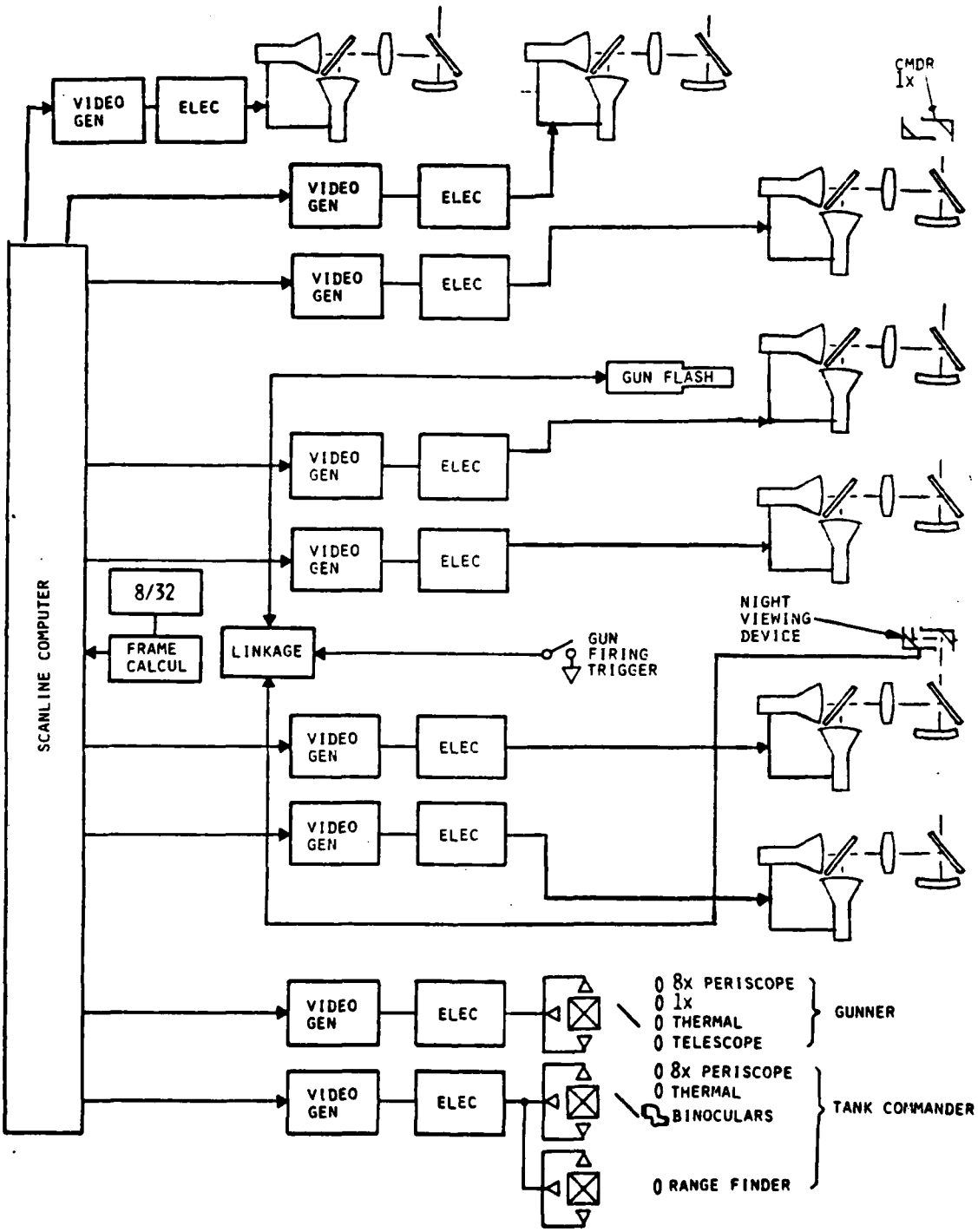

Figure 8-36 Expanded WAC System Configuration

background display and the magnified image of the scene area in the binoculars. The design of the optical subsystem will be the same as described for the DIG/Dome configuration.

The estimated transmission of the display viewing system is 6%; therefore, a brightness of 125 foot-lamberts at the CRT faceplate provides a brightness of 8 foot-lamberts to the eye. At that highlight brightness, the monochromatic CRTs can provide 30% MTF at 900 cycles (1800 TV lines) across the width of the CRTs.

The training analysis indicates color imagery is desired. Colors may also augment the image content provided by the digital image generation equipment by helping the trainee to visualize the characteristics of the terrain.

A two color display can be used and provide training. Factors relative to the use of the two-color system are:

a. The color content of a battle area includes mostly greens, browns and off-whites.

b. A wide variety of colors closely related to those in the real world may be provided by the selected two-color system.

c. The two-color system is the simplest which will provide color differentiation without a major loss of resolution.

The color display system utilizing 2 monochromatic CRTs is capable of providing a display resolution of 1350 by 1800 pixels.

After a review of these considerations, the two-color display system is acceptable. The phosphors which have been tentatively selected are a mixture of P1 and P37 for color 1 and a mixture of P27 and P37 for color 2. The P1 is a sensitive green phosphor. The other phosphor mix was chosen to permit a color range from green, through near-white, to brown. The Kelly chart for lights (Figure 8-37) shows that the second phosphor should be somewhere near a value of X = .45 and Y = .3 to provide a pink color. Pink is required because a dark pink appears as brown.

Any color between these points can be contained by control of the intensity produced by each of the CRTs.

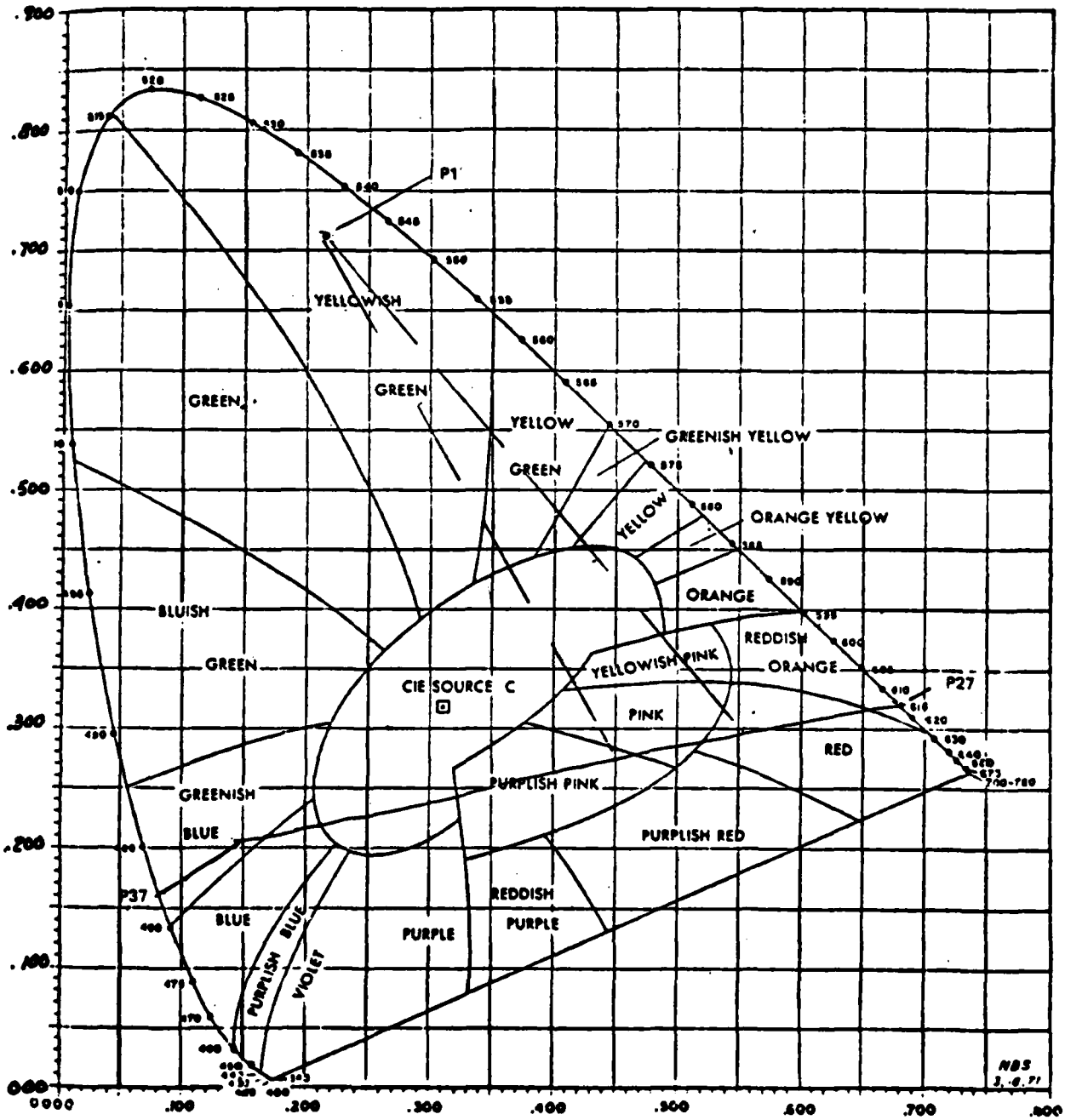

Figure 8-37 Kelly Chart of Color Designations for Lights

The electronics for the CRTs of each two-tube display channel will be identical. A block diagram of the system is shown in Figure 8-38. A summary of the main system performance parameters is listed below.

Scan Direction	Vertical
Raster Format	3 x 4
Vertical	
FOV	45° per channel
pixels/line	960 per channel
Resolution	4 arc min/pixel
Horizontal	
FOV	60° per channel
Scan Lines	931 per channel
Resolution	5 arc min/pixel
TV field rate	Hz
Interlace	2:1
Video bandwidth	20 MHz
Mapping accuracy	
Within the central 40°	±20 arc minutes
Elsewhere in the forward channels and throughout the side channels	±30 arc minutes
Overlay of the lines of CRT 1 with those of CRT 2	±.5 TV lines
Large area contrast ratio	20:1
Brightness (near-white composite color)	8 foot-lamberts minimum
MTF (single tube)	

Within central 40°	
of each display	35% minimum
Over the balance of the display	20% minimum

The deflection and control amplifiers are of a new design, providing linear deflection with fast retrace without water cooling. The amplifiers are controlled by static analog raster computers (SARCs) which control the magnitude and rate of all deflections so that the system is mapped properly when viewed from the center of the system. The system approach developed for the display raster computer uses the fact that the scan on the display is divided into orthogonal fast and slow sweeps. The desired positions of the spot in terms of linear reference sweeps are computed on an offline basis, the results being expressed in mathematical equations. The series approximations to these equations result in a polynomial expression which is then implemented by the hardware. Simplified versions of this approach provide dynamic control of focus, astigmatism, and spot wobble.

CRT phosphor protection circuitry is included in the CRT electronics. This circuitry senses the presence of output sweep currents. As long as both horizontal and vertical currents are present, the CRT is permitted to function normally. Upon failure of either one, or both, two actions are taken:

1) a relay is energized, turning off the CRT's high voltage supply;

2) the video blanking circuit is activated to continually blank the CRT

Successful operation of the two-CRT color display system requires precise superimposing of the two identical display images, as viewed by the trainee. In order to achieve this alignment, precise electrical alignment and stabilization of both rasters will be required, in addition to precise mechanical alignment and stabilization of both CRTs and beam-splitters. This problem is akin to the convergence problem in a shadow-mask CRT system, and is identical to the problem faced by color camera and CRT projector designers. However, the problem is significantly simpler in this application than that which has been solved in CRT projectors, mainly because both tubes are on-axis, so that the deflection controls of one should theoretically be identical to those required for the other, without requiring compensation due to off-axis projection.

However, in order to assure long term stability and therefore to reduce the maintenance effort, a system for maintaining

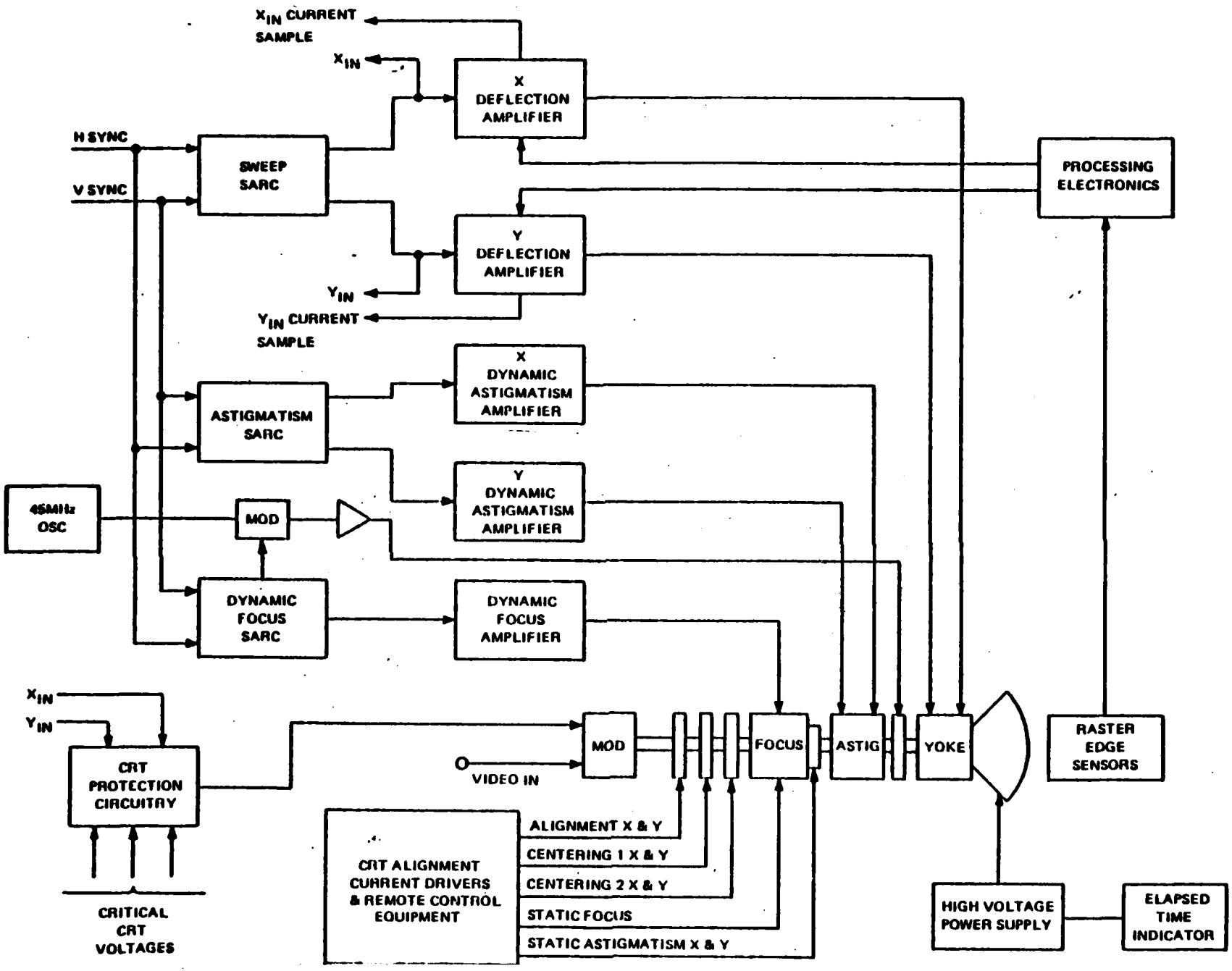

Figure 8-38 Display System Electronics

steady and dynamic registration of the two-CRT displays is recommended. The basic design of this is illustrated in Figure 8-39 . Statically, the beam will be aligned by an alignment coil, which is mounted on the neck of each CRT and fed from a very stable current regulator power supply. Similarly, the beam will be centered in both the horizontal and vertical axes by means of centering coils mounted on the neck of each CRT and also fed from very stable current regulated power supplies. Dynamically, the beams or rasters will be stabilized in size and centering by means of an electro-optical feedback system. In this system, charge-coupled photo sensor devices will be focused on the CRT image surface at appropriate locations. These devices will respond to the raster position and will be calibrated so as to detect any raster size or centering drift in either direction. The error signals will then be processed by the drive processing electronics block of this system to derive an offset voltage to be added to the main horizontal and vertical sweep waveforms to recenter the raster.

A second feature which is not normally incorporated is the inclusion of spot wobble to broaden the CRT spot with a slight decrease in resolution. The purpose of this is to reduce the visibility of the individual lines in the display. The magnitude of the spot deflection will be adjusted so that uniform brightness is obtained and so that individual lines will scarcely, if at all, be visible. This essentially converts the spot from a pointed-top spike to a narrow beam with steep sides, thereby resulting in negligible MTF loss in the horizontal direction and none in the vertical direction.

The overall performance of this system configuration is provided in the system tradeoff section.

DIG - Expanded WAC Performance

The DIG expanded WAC visual system provides out of hatch displays for the TC, loaders and driver. In addition it provides displays for the commander's 1-X periscope, loader's periscope, driver's night vision device and all vision blocks. The DIG with refractive optics provide imagery for the binoculars powered optics and gunners 1X scope.

The characteristics are summarized in Table 8-19 .

TABLE 8-19 DIG/EXPANDED WAC PERFORMANCE CHARACTERISTICS

	GUNNER T.C. POWERED OPTICS	COMMANDER	LOADER	DRIVER
FIELD OF VIEW	85% OF NORMAL F.O.V.	-14°+143°h +22.5°v	-91.2+14h +22.5°v	-55°+55°h °22.5°v
RESOLUTION MIN/L.PR.	-8.6	10	10	10
MODULATION	65%	65%	65%	65%
LEOMINOSITY	8 FT. L	8 FT. L	8 FT. L	8 FT. L

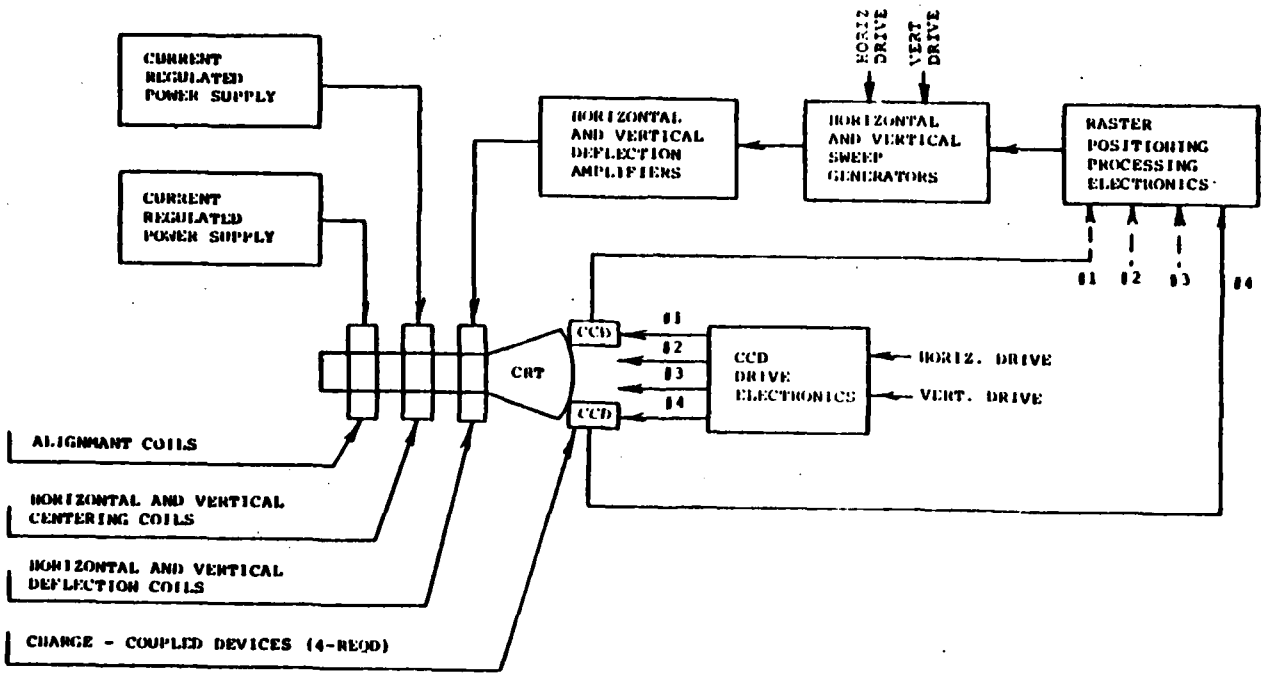

Figure 8-39 CRT Dynamic Registration Block Diagram

The small pupils prevent the commander and loader from using each other's displays therefore the commander must slew the turret to bring a potential target the loader has spotted into the commander's field. This is a disadvantage since the commander is distracted from his observation area.

The display image crispness is the major attribute of the system since the modulation at 2000 pixels per line is 25 percent.

8.6.2 Dome Approach

The visual system is made of two display screens, projectors, two crew stations, and fighting and driver stations. The instruments in the crew stations have display units separate from the background display. The commander's one power periscope and driver's night visual block are the exceptions. They view the projection screen.

Fig. 8-34, 8-35 show the commander's crew station and the driver's crew station respectively.

The dome is mounted to the motion base 76" below the equator of the dome. The dome is very rigid by virtue of its shape. No other eternal stiffening or skeleton is required.

The projectors are carried by a truss with 6 fold rotational symmetry. The truss has 6 legs which transfer the load of the projectors to a small circle on the dome at about +40° latitude. See Figure 8-34. The truss has a very deep section and is inherently quite stiff and light. Because of this and the shape of the dome the projectors will be held rigid with respect to the motion base through all accelerations of the motion system.

The stiffness is so high and mass low that the resonant frequency is 100 Hertz. The motion system response is much less, about 10 Hertz. Vibrations greater than 10 Hertz only appear in the rare event that the motion system hits a stop.

The projection lenses are contained in a tunnel to protect them from dust and damage. It is shown in Figure 8-34. The tunnel is sufficiently long to allow the remote mounting of the light valve. The projection lens output is mounted as close to the axis of the dome as possible. There are four of the projectors mounted radially about the axis of the dome. They are shown in Figure 8-34. The angular spacing between projectors is 50°. These cover a total horizontal field of 200°.

The 200° field was chosen to provide nearly full peripheral vision when the tank commander is looking forward. It is felt it is needed because of the greater appreciation of motion in the peripheral vision. The design does provide expansion capability to full 360° by the addition of 4 more projectors. The projector support structure is capable of taking the additional load without compromising strength, safety or resonant frequency. The extra 5° of field has the option of being used as an overlap between

adjacent fields. This overlap can be used to dissolve one image into its adjacent one. The projectors can easily be repositioned for this because of the mounting symmetry. The dissolve would minimize the appearance of joining lines between adjacent images because of the smooth ending of the field.

The 3X4 aspect of the light valve can be positioned so that the long dimension of the format is vertical or horizontal. The field of view is found from the equation

$$\theta = 2 \tan^{-1} A \tan \frac{50°}{2}$$

Where A is the aspect ratio of vertical to horizontal size of the raster. The vertical fields are 63 3/4° and 38 5/8° respectively. The former is obviously the choice when the visual must simultaneously provide at least 30° up for air threat training as well as 20° down for tactical training.

The resolution is determined on table 8-20. The final resolution may be slightly different due to hardware consideration. The scan lines are displayed vertically even though they are horizontal in the light valve. They are rotated by the optical system. The vertical scan lines provide better distribution of edge intersections from the DIG between the scan lines. Because each line contains about the same amount of sky and terrain, there is a very small chance that the intersection limit per line will be exceeded. If the display lines were horizontal the lower lines would most often run through terrain and could cause potential overloads in the DIG system.

The projector is shown on figure 8-40 . The light valve produces an image with a 3X4 aspect ratio with line ratio as calculated on table 8-20 . The total number of lines is 1002 along the "3" side. The total number of elements along the "4" side is 1153. This allows for both line and field retrace while providing an image with a 3X4 aspect ratio and uniform resolution in both directions.

The image is relayed by the T-6 lens that comes with the GE projector. The output is picked up by the decollimating lens and imaged at field lens #1 through the rotation prism. The rotation prism rotates the image 90°.

The field lens #1 relays the pupil of the T-6 lens to the relay lens. The light path goes through two folding prisms to direct the light down the projector tunnel which is shown on figure 8-40 . The relay lens is located in the tunnel and forms another intermediate image at field lens #2. This field lens is located near the bottom of the tunnel.

TABLE 8-20 FIGHTING STATION RESOLUTION DETERMINATION

- gross information 896,000 pixels
- fractional line loss due to field retrace 0.075
- no change after line retrace because pixels read out of SLC only during trace
- want net resolution to be same in X and Y directions
- Kell of 0.7 in both directions
- aspect ratio 3x4
- X is # of pixels in X direction along line; Y is # of pixels in Y direction across the line; 0.075Y is number of lines lost in field retraces

$$X \cdot Y + 0.075Y = 896{,}000 \qquad (1)$$

$$\frac{0.7x}{0.7y} = \frac{4}{3} \qquad (2)$$

Solve (2) $X = 1.3333$ (3)

Substitute (3) in (1) $0 = 1.3333Y^2 + 0.075Y - 896{,}000$ (4)

Solve (4) $Y = 819.74$, $819{,}78$ Resolution in Y (5)

Substitute (5) in (1) $X = 1092.95$, 1092.90 Resolution in X

Kell resolution along line $R_x = 0.7x = 764$

Kell resolution across line $R_y = 0.7y = 573$

Total lines - $1.075y = 880$

Total elements in projector with line retrace = 1.20 x 960.8

= 1152

Net Kell resolution $= \tan^{-1} 2\frac{\tan\ (50/2)}{R_y} = 5.60$ min/lin

= 11.2 min/lin PR

Net resolution = 7.84 min/lin PR

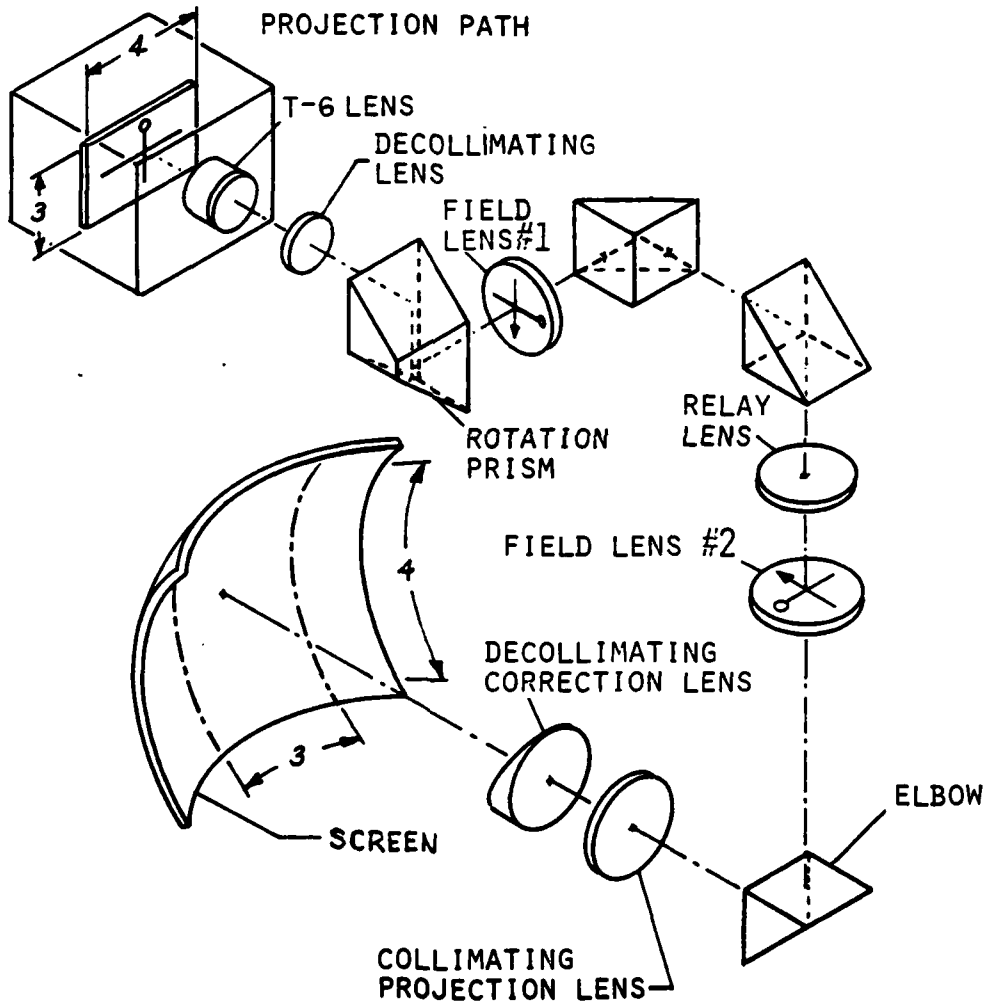

Figure 8-40 Fighting Station Projection Optics

The elbow prism redirects the light to the collimating projection lens. The collimating projection lens is located close to the elbow prism so that the final exit pupil can be made to appear as close as possible to the axis of the dome. This minimizes distortion arising from this separation.

The image from the collimating projection lens then passes through the decollimating correction lens and then to the screen.

The decollimating correction lens is a marginal section of a large lens which has the optical axis passing through the commander's out of the hatch eyepoint. The combination of the decollimating correction lens passes through the commander's eyepoint and the dome axis, the distortion is zero for the commander's out of the hatch eyepoint. This is because the projection point is virtually the commander's eye.

Some small distortion may be apparent as the eyepoint is shifted from the commander's out of the hatch eyepoint because the dome surface is 14 feet from this point. The distortion will appear as two forms.

First the elevation angles will be in error. For example, a horizon line located exactly in a horizontal plane through the nominal commander's eye will appear high when the eye is in the cracked hatch position. From figure 8-34 the difference in height is 16". This becomes an angle of $\phi = \tan^{-1}(16/12 \times 14) = 5\frac{1}{2}^{\circ}$.

If one is in a flat desert, then the appearance will be of being in a depression. However, with variation in terrain elevation, it will be hardly noticeable. In addition, cracked hatch is not often used. Usually out of hatch and buttoned up are used.

The second problem is that horizontal straight lines will appear slightly curved because of the spherical surface on which they are projected. The curvature is small. For example, the same horizon line mentioned above will appear to curve up slightly at the edges because it is at a constant elevation angle, not a constant projection angle as is required for it to appear straight.

The value of the angular increment of the edge of the line can be calculated from the equation

$$\delta = \frac{\phi}{2} - \sin^{-1}(\cos\theta \sin\frac{\theta}{2})$$

The derivation of the equation can be found on figure 8-41. The angle θ results from moving the eye to a new position without changing the image geometry. For the example quoted above, the value is $5\frac{1}{2}^{\circ}$. The bend "δ" of a line at the edge of a

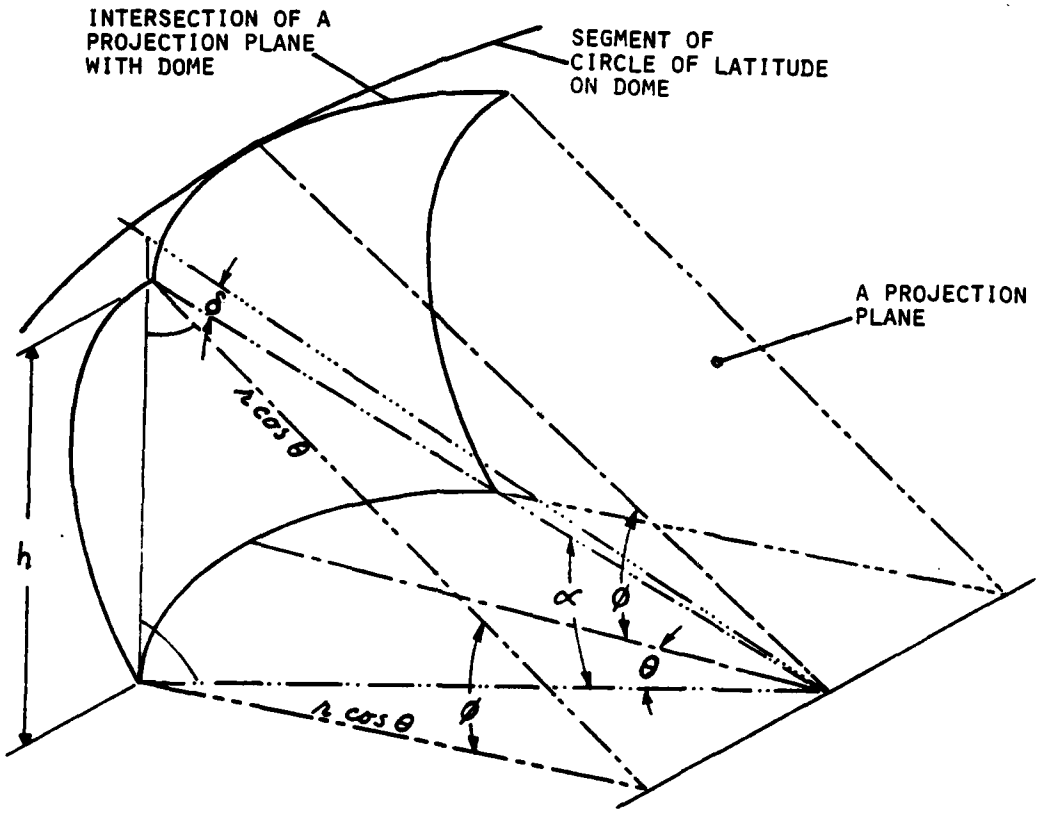

$$\alpha = 2 \text{ SIN}^{-1} \frac{h}{2r} \qquad (1)$$

$$h = 2r \text{ COS } \theta \text{ SIN } \frac{\phi}{2} \qquad (2)$$

SUBSTITUTE (2) IN (1)

$$\alpha = 2 \text{ SIN}^{-1} (\text{COS } \theta \text{ SIN } \frac{\phi}{2}) \qquad (3)$$

THE ERROR IS

$$\delta = \frac{\phi - \alpha}{2} \qquad (4)$$

SUBSTITUTE (3) in (4)

$$\delta = \frac{\phi}{2} - \text{SIN}^{-1} (\text{COS } \theta \text{ SIN } \frac{\phi}{2})$$

Figure 8-41 Dome Distortion Geometry

field segment $\theta = 25^{\circ}$ is calculated below.

$$\delta = \frac{5.5^{\circ}}{2} - 2 \sin^{-1}(\cos 25^{\circ} \sin 5.5^{\circ})$$

$$= .2578^{\circ} = 15.5 \text{ min}$$

This is quite small a bow for a line over a field of 50°.

The luminosity of the dome was calculated to be 6 or 10 foot lamberts depending on the screen gain when the screen is illuminated with a 500 lumen source. The 6 foot lambert source is the best compromise between fall-off and brightness as discussed. The finish is done by a Singer proprietary process.

The process produces a reflective screen. The reflective screen acts like a mirror. The projection point is imaged at the conjugate point. Since the pupil is on the axis of the dome, the image of the pupil is also on the dome axis but at an equal distance below the center of curvature that the pupil is above. This is the point of peak brightness. The fall-off bend angle is measured with respect to the ray which runs from the conjugate point to the screen.

The center of curvature is located so that the fall-off will be split between out of the hatch and the viewing blocks. The bend angle is equal for these two viewing positions.

Figure 8-42 shows the gain curve for a screen of gain 3. The out of the hatch eyepoint is 8" above the conjugate point while the viewing blocks are 20" below this point. The bend angles corresponding to this are found from the equation $\beta = \tan^{-1}(\frac{d}{r})$ where d is the vertical displacement of the eye from the conjugate point and r is the dome radius.

The angles are 2.7° up and 6.8° down. The corresponding net gains are 2.9 and 2.5. The corresponding fall-off are 3% and 17%.

Figure 8-43 shows a field of view plot for the commander. The coordinate system is polar. Shown are the fields through the vision block, cracked hatch, and full out of the hatch. They do not include vignetting by the tank.

The floor plate covering the motion base between the turret and dome is painted black so that it will not distract the trainees from the screen. Since nothing but the image moves relative to the crew, there is no distraction by unnecessary motion. The projector support structure over head will also be painted black. These black surfaces also kill their reflections which would have gone back to the screen and reduced the contrast.

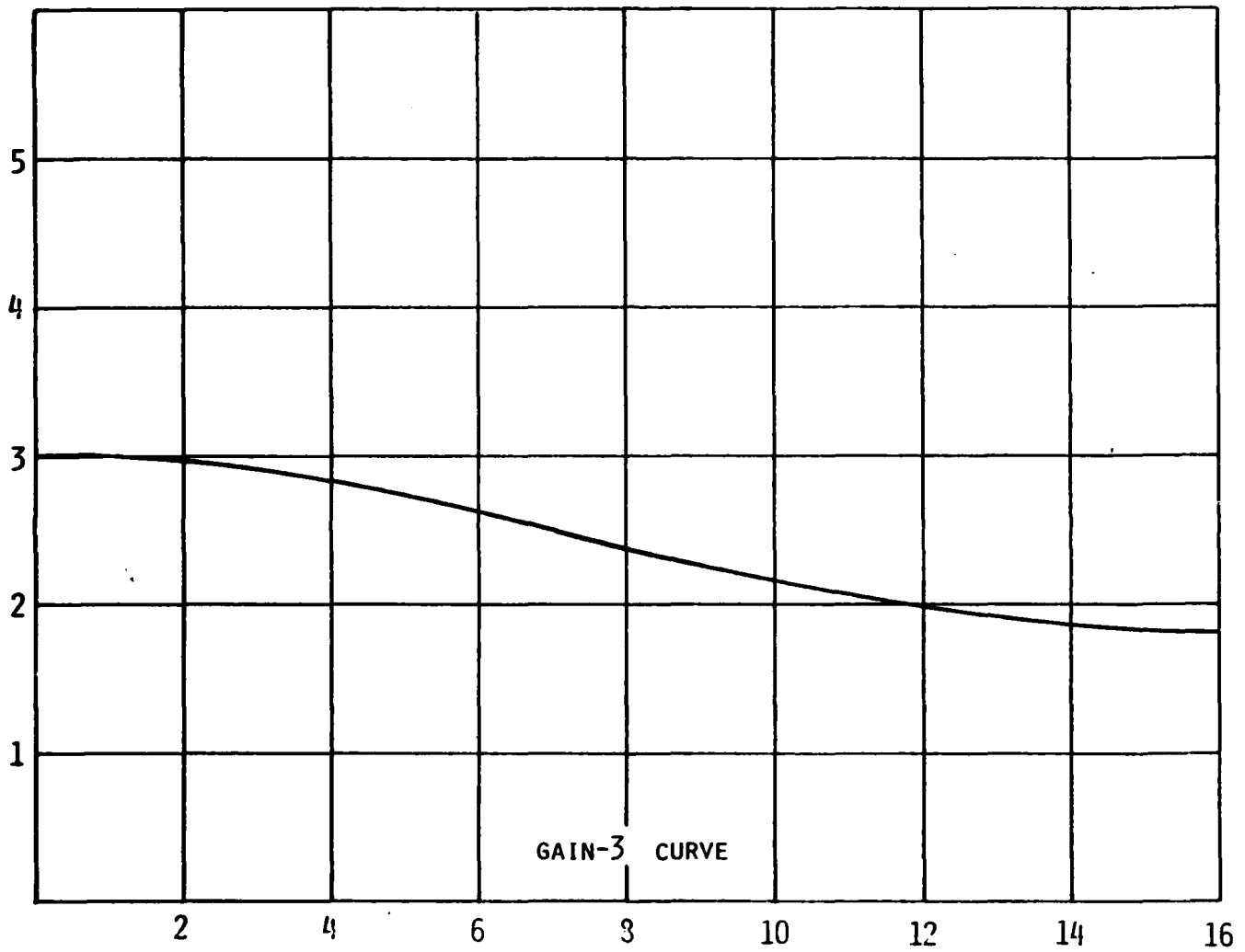

Figure 8-42 Screen Gain Curve

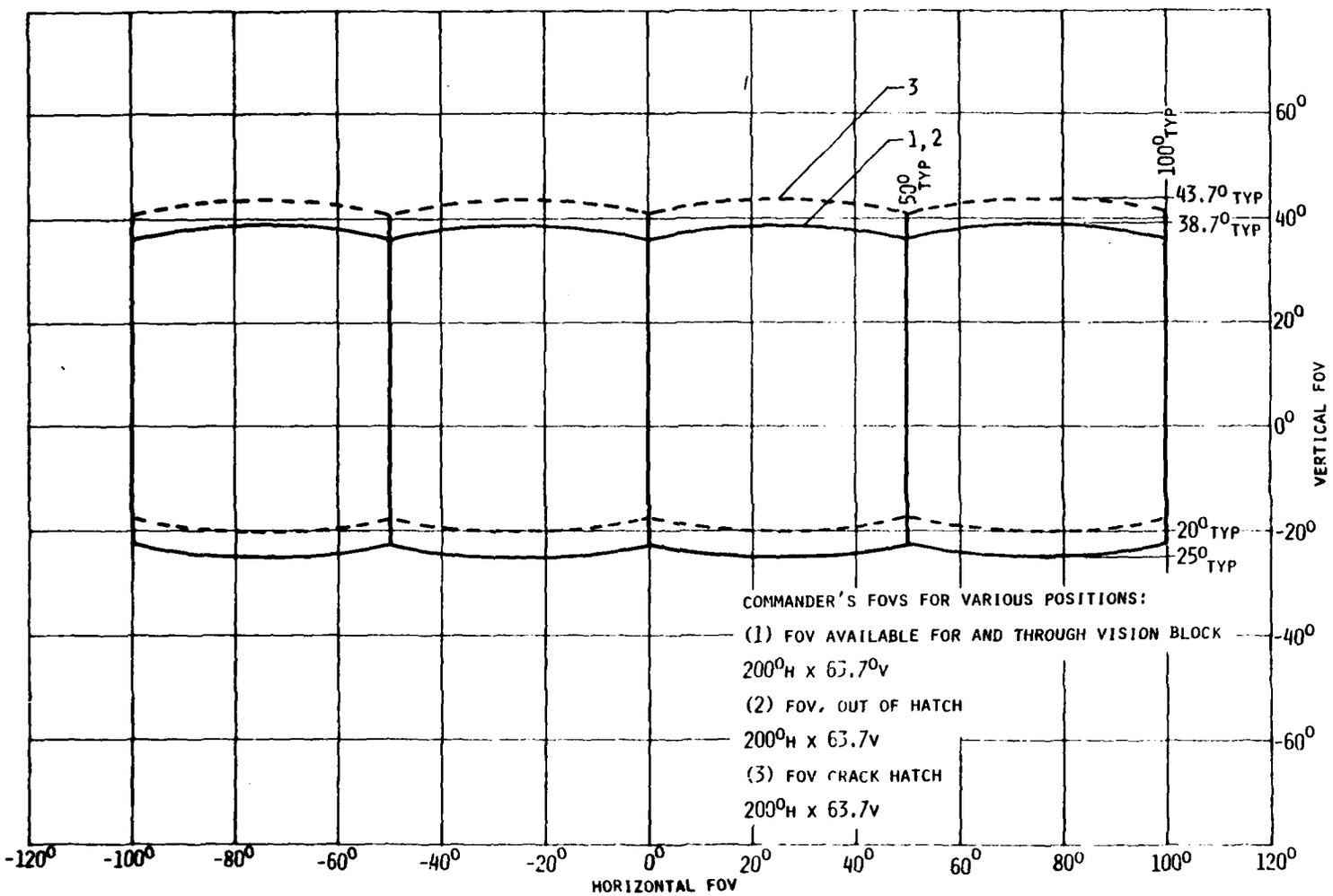

Figure 8-43 Commander's Field of View - Various Positions

Cabling for the projectors will exit the dome above the visual area and descend outside of the dome to under the motion base. From here they will be routed to the floor and then to the video generators. The cable length is 125 feet. The video distribution boxes are capable of driving 200 feet of cable, which is 75 feet more than needed.

The vision blocks are located 28" below the commander's out of hatch point where the image is correct. The angular error of the horizon would be $\tan^{-1}$ 28"/12 x 14' = $9\frac{1}{2}^{\circ}$. This is significant. However, it can be corrected by using a vision block that is a marginal section of a lens which has a focal length equal to its distance from the screen and has a virtual optical axis which is horizontal and passes through the commander's out of the hatch eyepoint. Figure 8-44 shows the effect of the vision block on the angle of the incoming rays from the two extreme edges of the field. It converts the apparent angles to the same correct angles as seen from the commander's out of the hatch eyepoint.

The projectors are located sufficiently far above the commander so that there is no shadow of the stub gun on the screen. The stub gun will occlude part of the image in a normal way. It also houses the flash generator.

A post supports the binoculars. The post is between the 4 image relay tunnels of the projectors. The post is braced as shown on figure 8-34 and also supports the image relay tunnels. Figure 8-33 shows the binocular configuration. The operation of this device is described in the section on refractive optics.

All the optical devices except the commander's periscope have an image display separate from the dome. The resolution and detail is compatible in the display and optics. The 1X sight resolution will be the same as the dome, whereas the powered instruments will show scenes of similar apparent resolution but magnified. Therefore the actual resolution will be higher than the dome by the magnification.

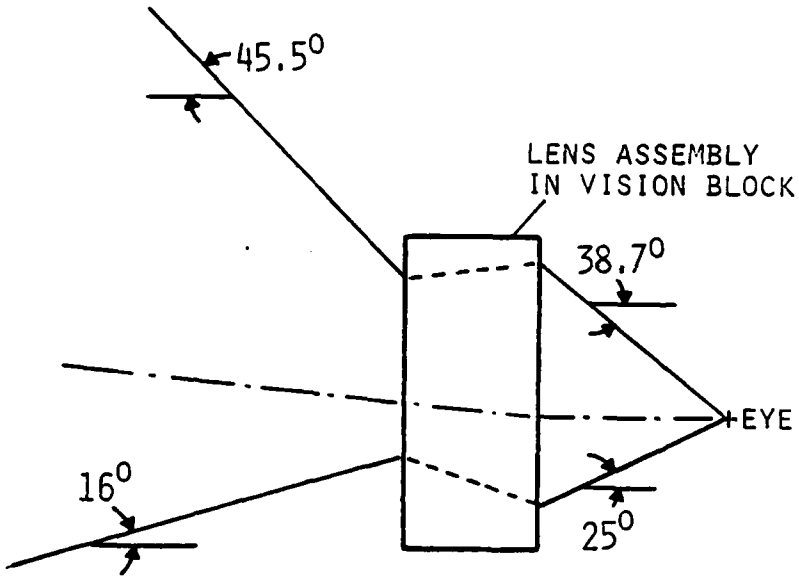

Figure 8-44 Vision Block Correction

The projectors are carried in a fixed relation to the turret, therefore the DIG will provide changes in the imagery with respect to the turret. The motion cues do not change the relation between the projectors and the turret as with some other systems.

The driver trainer has an identical dome system to the commander's crew station. It is shown in figure 8-35. The driver is located 17" below the projector in out of the hatch mode.

The center of curvature is located 10" below the projection lens. This places the conjugate point 20" below the projection lens. This is midway between out of the hatch eyepoint and the vision blocks. This makes the maximum bend angle $\tan^{-1}(3/168) = 1°$. For this angle there is virtually no fall-off.

The projection lens does not have a decollimating correction lens as the ones in the commanders station. However, the projection lens will be exchangeable between one giving a field of view of 100° and another giving 60°. The change in the field will enable experiments to be conducted to find the best trade off between resolution and field of view. Figures 8-45 and 8-46 show the field of view for the driver with various head position for the two formats. The 22° down field is the lower limit of driver down vision. This limit is from the tank body.

The optical system is shown on figure 8-47. Two images, one from each light valve, are projected through a rotation prism to rotate the image 90°. The images are combined after the biprism. The biprism in combination with the telecentric field lens merge the two pupils into one and align the image planes so that they are coplanar.

The field lens #1 relays the pupil to that of the relay lens. Next the relay lens forms an image of the composite object at the second field lens. The interchangeable projection lens then projects the image to the screen.

The resolution is calculated in table 8-21. The actual resolution may vary slightly from this due to hardware considerations. The night vision device is mounted into the driver's hatch cover. It is rotatable to different parts of the field. Since the forward field is limited to 100°, a special optical coupler will be built into the device to permit full rotation as in the actual hardware.

As shown on figure 8-48, the driver can rotate his lower viewing prism but the upper prism does not rotate. It views the center of the image on the screen. As the driver turns his night vision device, the image on the screen rotates to compensate for the rotation caused by the simulated night viewing device.

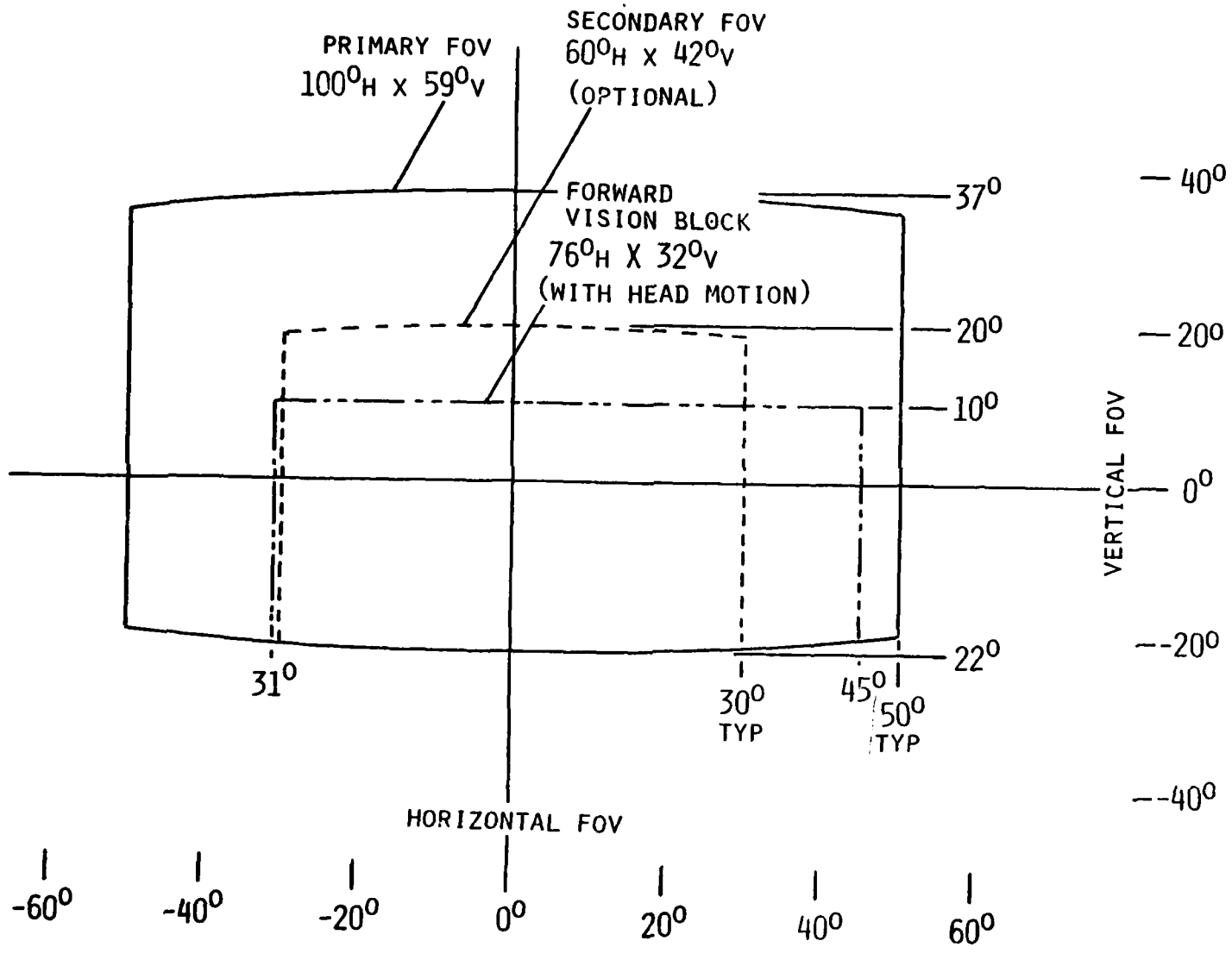

Figure 8-45 Driver's In-Hatch Field of View - Vision Block

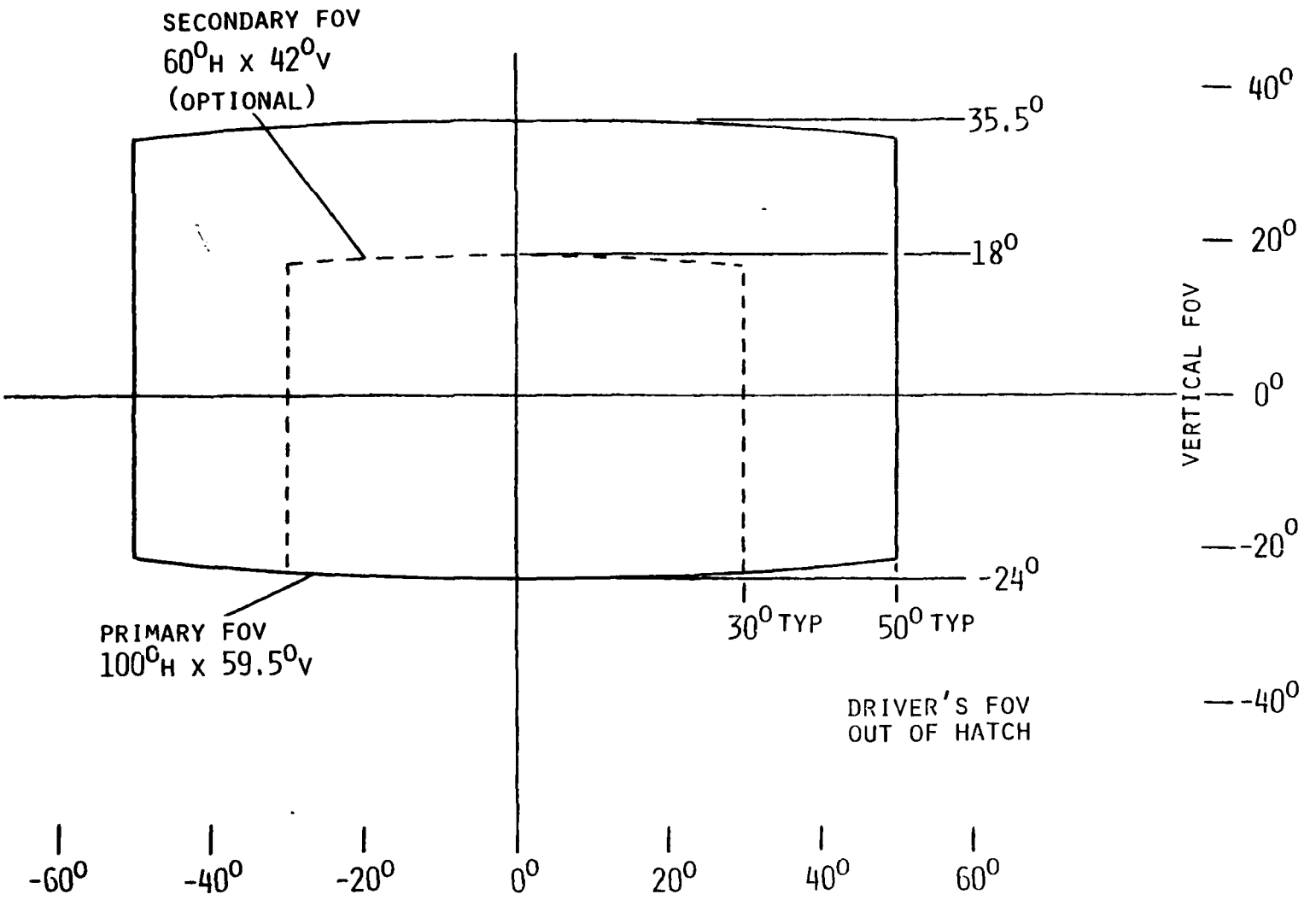

Figure 8-46 Driver's Out-of-Hatch Field of View

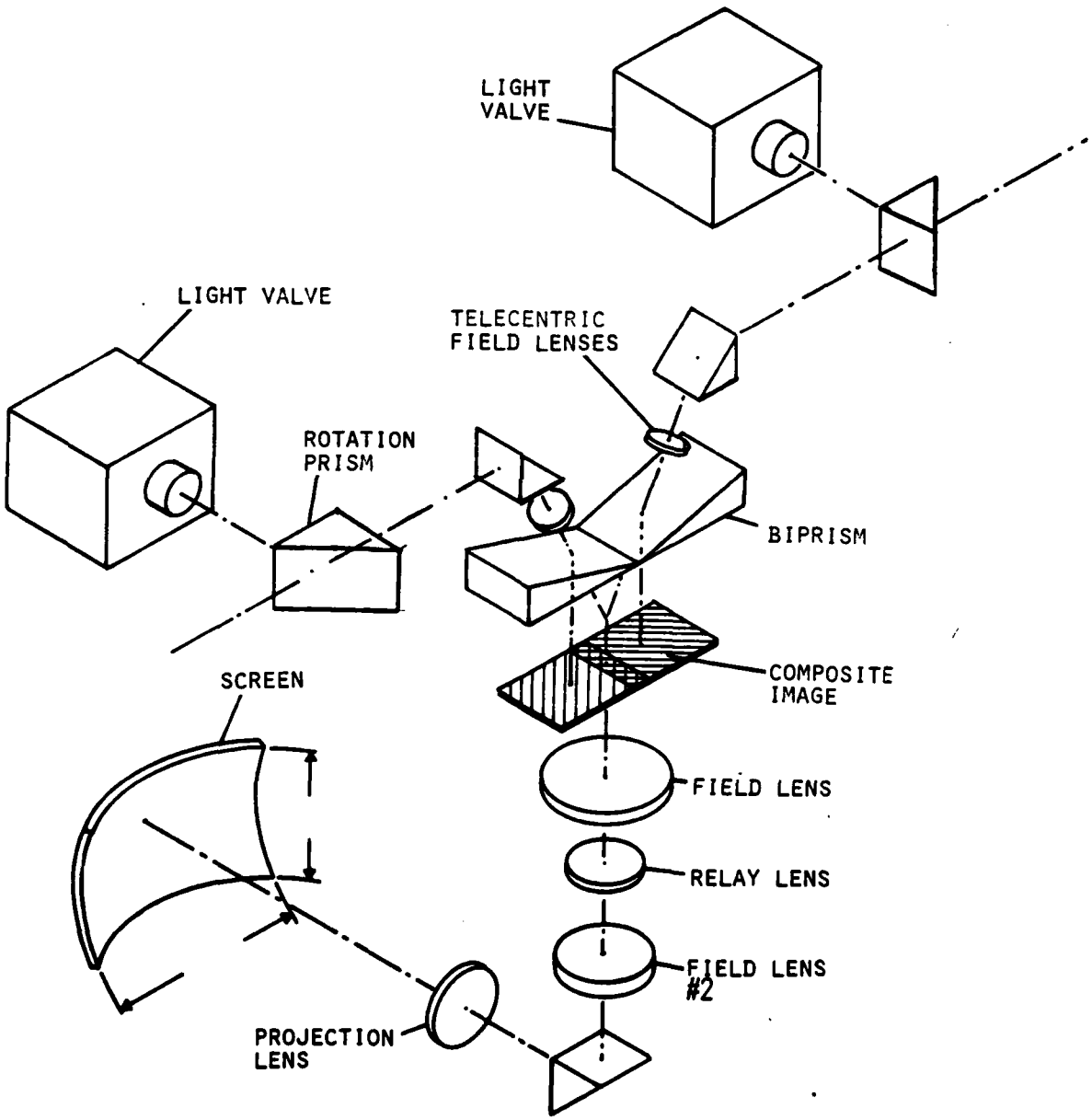

Figure 8-47 Driver's Projection Optics

TABLE 8-21 DRIVER STATION RESOLUTION DETERMINATION

- gross information per channel 896,000 pixels or 1,792 pixels for the driver
- fraction of lines lost during field retrace .075
- no loss during line retrace because pixels read out of SLC only during trace
- net resolution to be same i- X and Y directions
- kell of .7 in both directions
- aspect ratio 6 X 4
- X is # of pixels in X direction along line Y is # of pixels in Y direction across the line

Total pixels: $X \cdot Y + .075Y = 1{,}792{,}000$ (1)

Equal resolution in X & Y $\frac{.7X}{.7Y} = \frac{4}{6}$ (2)

Solve (2) $X = .66667Y$ (3)

Substitute (3) in (1) $0 = .6667Y^2 + .075Y - 1{,}792{,}000$ (4)

Solve (4) $Y = 1639.56,\ 1639.45$ (5)

Substitute (5) in (1) and solve $X = 1092.90,\ 1092.97$

Kell Resolution along line $R_x = .7X = 765$

Kell Resolution across line $R_Y = .7Y = 1147$

Total lines $= 1.075Y = 1762$

Total elements in projector with line retrace $1.20X = 1310$

Net Kell Resolution $= \tan^{-1} \frac{2\tan 100/2}{R_Y} = 7.14/\text{min} - 14.3/\text{min/line pc}$

Net Kell Resolution small field $= \frac{\tan 60/2}{R_Y} = 3.46/\text{min} - 6.92/\text{min/line pc}$

Resolution large field 10.0 min/line pc

Resolution small field 4.84 min/line pc

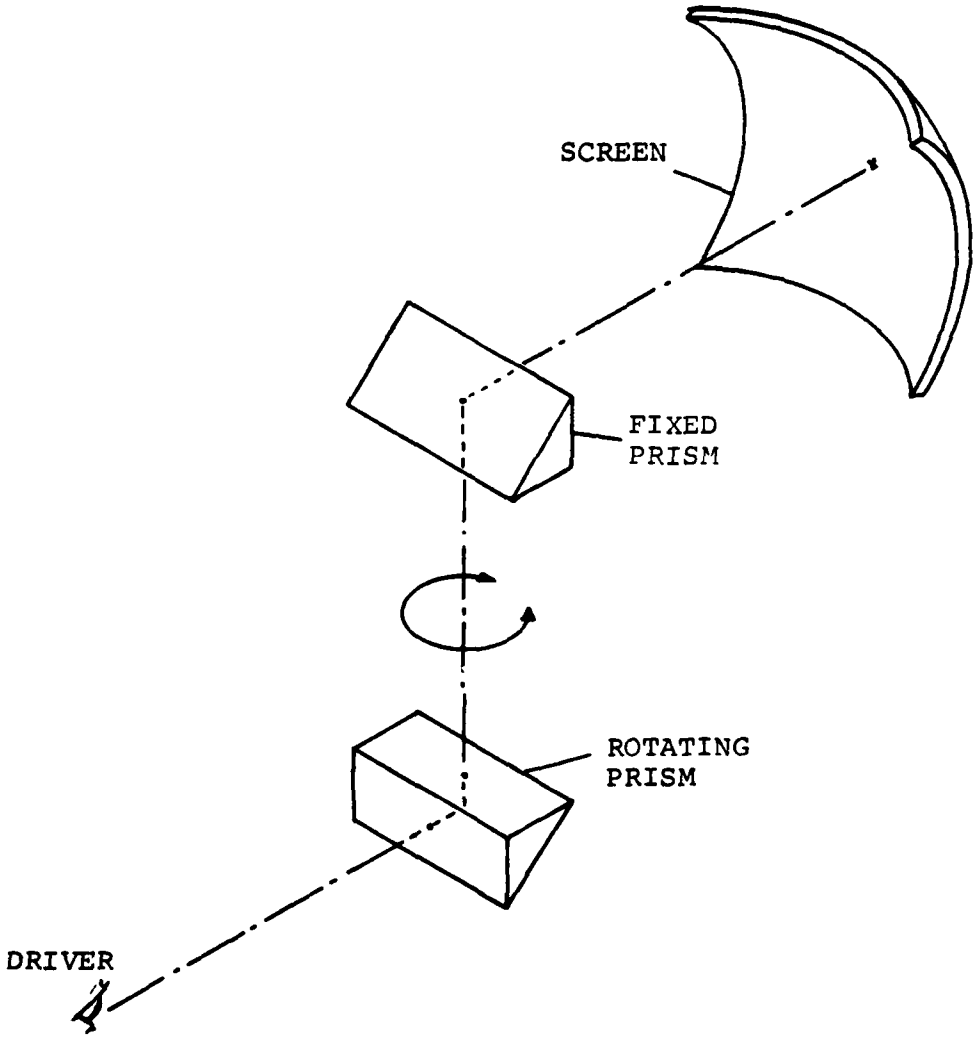

Figure 8-48 Driver's Night Vision Device

The loader's periscope will look directly at the screen. This device is rotatable to view any portion of the dome. Only the forward direction, relative to the turret, will have imagery. All the loader will see is the commander's field not obstructed by the commander's cupola.

The gun flash will be simulated by a commercial photo flash unit. The discharge tube of this unit will be mounted in the end of the "stub" main gun. When the main gun is fired, the flash will occur simultaneously with the recoil and report. The flash is directed to the screen so that the area forward of the gun will be most brilliantly illuminated (as is the case with the firing of the actual main gun). The flash is also visible to the side of the gun; but with reduced intensity. The scene is washed out during the flash, which is bright enough to change the adaptation of the eye, just as in real-world situations.

Synchronization of the flash cue to gun firing is controlled by the computer. Iteration rates and flash system hardware determine synchronization accuracy. See figure 8-49. The flash unit is activated by a computer program via the linkage that closes a relay switch to discharge flash unit condensers through the flash tube.

The driver has a similar flash unit mounted over his head and directed to the screen.

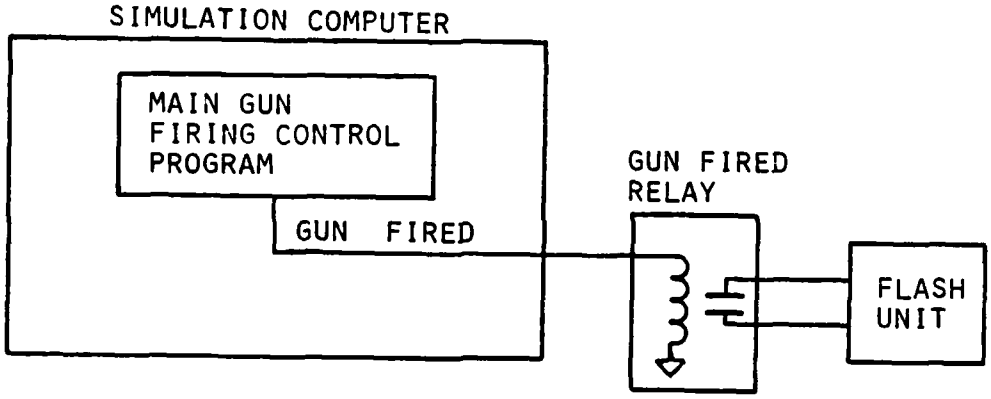

Figure 8-49 Main Gun Flash Device

Figure 8-50 shows the system block diagram which shows the interconnection of the visual subsystems. The chief merits of this approach are:

- no dynamic distortion
- no distraction from relative movement of floor
- no "fish bowl" effect from motion perspective while moving inside of a dome.
- better laboratory environment
- simpler motion-visual interface
- no visible support structure for projectors or display
- best brightness
- horizon position correct for out-of-hatch and buttoned up.
- less expensive dome

The disadvantages are:

- optical mapping required
- horizon movement and distortion for cracked hatch
- new motion platform must be designed
- more distortion or "fish-bowl" effect due to movement of the observer

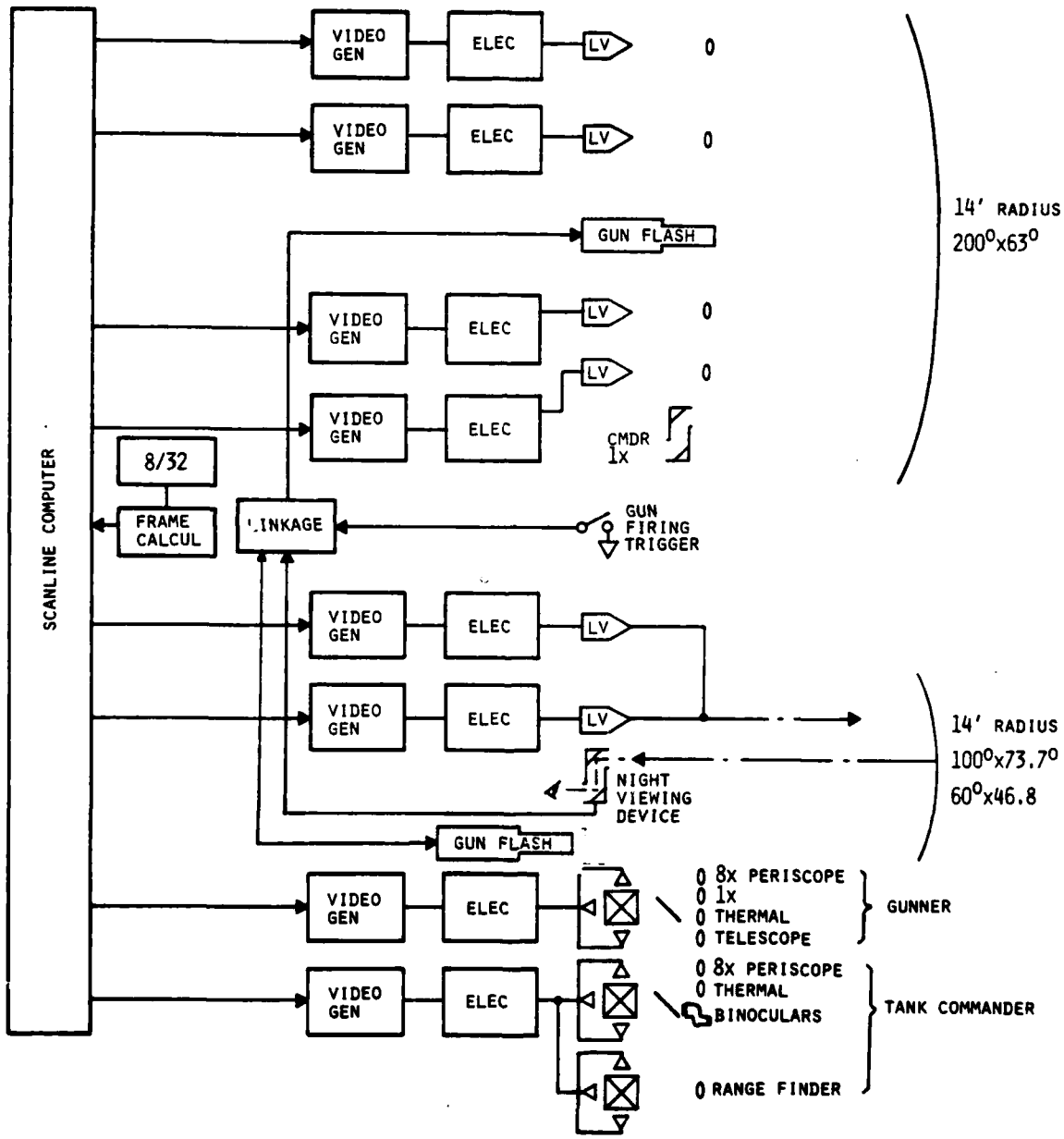

Figure 8-50 Recommended FCIS-LM Visual System Configuration

8.6.3 System Selection

There are two candidates that meet the training objectives. They are Expanded WAC and a motion system with attached dome and projectors. Both systems are compared in the tradeoff analysis selection chart. The result of the analyses and the comparisons that follow make the dome system the first choice.

The expanded WAC windows represent a significant improvement displays over older WAC which were also known as a Mirror-Beamsplitter Display. This is the result of increased field of view and resolution per channel.

The principal limitation of this system is the small pupil, and to a larger extent, the vertical field of view. Although the pupil meets the 6" specification for head movement, it is not adequate, since the trainee's eyepoint changes due to involuntary and voluntary head motions. The vertical field of view inhibits training for air threats approaching from the usual dive angles. However, it does cover the most common corridors.

The dome system does not exhibit these limitations. However, the loader does have a line of sight error of 8° in the forward direction. For surveillance training this limitation is not significant.

There are two additional problems relative to the expanded WAC system. The first is image interruption due to the many structural edges of the beamsplitters and mirrors. Each subsystem has four sets of these interruptions; three fixed relative to the turret, and one is fixed to the cupola. The second problem involves the presence of shock images from the spherical mirror and beamsplitter. These shock images include an image of the trainer face.

A very severe training problem is also present in the expanded WAC configuration. Since both the loader and commander have separate windows, and since the FOV for the two does not overlap, it is not possible for the loader to advise the tank commander of threats since he (the tank commander) would see them only if he rotated the turret. Such a severe communication limitation between the crewmen is not acceptable for full-crew interaction simulation.

Table 8-22 is a tabulation of the principal features of the two systems. Table 8-23 is the tradeoff analysis/selection chart.

TABLE 8-22 TABULATION OF PRINCIPAL FEATURES

	DESIRED	DOME	EXPANDED WAC
FIELD OF VIEW	360° x 60°	200 x 63 3/4 EASILY EXPANDED BY ADDING PROJECTORS DRIVER 100 x 59.5	158 x 45 TC AND 108 x 48 LOADER EXPANDED BY ADDING DISPLAYS DRIVER 108 x 45
GAPS BETWEEN JOINTS OF ELEMENTS	0°	0°	1/2°
NUMBER OF MAIN DISPLAY UNITS FOR COMMANDER AND DRIVER AND LOADER	AS FEW AS POSSIBLE	6	7
EXPANDABILITY	TO 360° x 60° COMM 200 x 40 FOR DRIVER, MULTI DIG, VIDEO GENERATOR FOR MORE RESOLUTION	ADD 4 VIDEO GENERATOR AND 4 PROJECTORS, NO STRUCTURAL CHANGE, TO GET 360 FOR LOADER AND COMMANDER	ADD 2 TO COMM AND 1 TO LOADER TO GET 266° FOR COMMANDER AND 158° FOR LOADER
BRIGHTNESS DIFFERENCE AT JOINTS AND FALL OFF	NONE AND NO FALL OFF	NO BRIGHTNESS DIFFERENCE BUT FALL OFF TO 50%	50% FALL OFF - SOME VARIATION IN BRIGHTNESS
STRUCTURE	NONE VISIBLE	NONE	5 SETS OF STRUCTURE ONE MOVES WITH CUPOLA
PUPIL	36"	36" WITH SOME LOS ERRORS	6"
RESOLUTION - MAIN SCENE	AS GOOD AS 1 MINUTE BUT 10 MINUTES ACCEPTABLE	11.2 MINUTES FOR COMMANDER	10 MINUTES

TABLE 8-22 TABULATION OF PRINCIPAL FEATURES (CONT)

	DESIRED	DOME	EXPANDED WAC
RESOLUTION - AT OPTICS EYEPIECE	10 MINUTES	10 MINUTES	10 MINUTES
COLOR	FULL COLOR	FULL COLOR	2-COLOR
DISTORTION	NONE	NONE AT OUT OF HATCH & BUTTONED. SOME AT CRACKED HATCH	NONE AT NOMINAL EYEPOINT
REFLECTIONS	NONE	CROSS-SCREEN REFLECTION PRESENT	REFLECTIONS & DISTRIBUTED LIGHT FROM CRTS
GHOST IMAGE	NONE	NONE	REFLECTIONS FROM SPHERICAL MIRROR AND BEAMSPLITTER
COLLIMATION	GREATER THAN 40 FEET	CONSTANT AT 14 FEET OUT-OF-HATCH ∞ BUTTONED UP	CHANGES AS POSITION OF EYE IN PUPIL
BINOCULARS	DESIRABLE	PROVIDED IN COLOR AT 10 MIN. APPARENT RESOLUTION	PROVIDED IN COLOR AT 10 MIN. APPARENT RESOLUTION
MOTION ENVELOPE	AS SMALL AS POSSIBLE	54W x 54L x 38H	54W x 54L x 30W
LINE OF SIGHT ERRORS			
. LOADER	NONE	8° (WORST CASE)	NONE
. COMMANDER	NONE	NONE	NONE
. DRIVER	NONE	NONE	NONE
BRIGHTNESS		6, OR 10 FT	8 FT

TABLE 8-23 TRADEOFF ANALYSIS CHART-DISPLAY SYSTEM

	TRADE-OFF PARAMETERS AND SELECTION CRITERIA	WEIGHTING FACTOR	DOME		EXPANDED WAC							
	PERFORMANCE PARAMETERS		EF	FM	EF	FM	EF	FM	EF	FM	EF	FM
PARAMETERS	FIELD OF VIEW	0.9	5	4.5	2	1.8						
	GAPS BETWEEN ELEMENTS	0.1	10	1.0	5	0.5						
	NUMBER OF DISPLAY UNITS	0.2	3	0.6	3	0.6						
	EXPANDABILITY	0.8	9	7.2	7	5.6						
	BRIGHTNESS DISCONTINUITIES	0.2	8	1.6	8	1.6						
	PUPIL	0.9	9	8.1	2	1.8						
	MAIN SCENE RESOLUTION	0.9	5	4.5	7	6.3						
	OPTICAL INSTRUMENT RESOLUTION	0.9	2	1.8	9	8.1						
	COLOR	0.4	10	4.0	8	3.2						
	DISTORTION	0.4	6	2.4	6	2.4						
	REFLECTIONS	0.5	6	3.0	6	3.0						
	GHOST IMAGES	0.3	10	3.0	5	1.5						
	COLLIMATION	0.2	4	0.8	4	0.8						
	BINOCULARS	0.8	8	6.4	7	5.6						
	MOTION ENVELOPE	0.1	7	0.7	8	0.8						
	LINE OF SIGHT ERRORS	0.2	9	1.8	10	2.0						
	BRIGHTNESS	0.6	10	6.0	10	6.0						
	PERFORMANCE SUMMATION			57.4		49.5						
CRITERIA	OVERALL PERFORMANCE			-		-						
	LOW PROCUREMENT COST	1.0	7.0	7.0	6	6.0						
	LOW OPERATING COST	0.8	7.0	5.6	7	5.6						
	SIMPLICITY	0.1	8.0	0.8	5	0.5						
	RELIABILITY	0.8	6.0	4.8	6	4.8						
	MAINTAINABILITY	0.8	7.0	5.6	7	5.6						
	SYSTEM COMPATABILITY	0.2	5.0	1.0	5	1.0						
	SYSTEM FLEXIBILITY	0.4	7.0	2.8	5	2.0						
	PRODUCIBILITY/AVAILABILITY	0.8	6.0	4.8	5	4.0						
	SAFETY ASPECTS	1.0	6.0	6.0	5	5.0						
	OVERALL SUMMATION			95.8		86.1						
	APPROACH REJECTION/SELECTION			✓		✗						

8.7 Additional System Performance Considerations

Figure 8-50 is a block diagram of the recommended FCIS visual system. Earlier sections have already described performance characteristics of the display system in terms of resolution and field of view for the crew.

8.7.1 Edge Distribution. Another system characteristic is the distribution of scene edges to 8 display channels. The Link DIG is capable of generating 10,125 potentially visible edges/frame. However, some edges must be used in overhead computations and others to perform certain non-visual tasks (such as the visual/dynamics interface and the visual/tactics interface).

Normal overhead processing of the DIG can be estimated as 1 edge/channel/50 edges in the data base. To generate 8000 edge scenes, there must be approximately 12,000 data base edges (edges facing away from the observer are lost). Using the 12,000 edges and the 8 channels in the system, an estimate of the overhead calculations can be obtained:

(12000 edges/50 edges) x 8 channels = 1920 edges

However, the slow movement of the tank vehicle (relative to aircraft rates), indicates that the overhead rate can be accomplished in less than 1/30 second. Overhead for the FCIS will be staggered so that the processing is completed for only 4 channels each frame. Thus, rather than spending 1920 edges/frame on overhead processing, the overhead burden is only 960 edges.

Additional time must be allocated to process vehicle dynamics data (see sec. 8.2). This computation has been estimated as indicated in the following paragraphs.

The data base will be sectioned into a grid pattern, each square representing 1 square nautical mile. For each square, a list of all the terrain objects in the scene will be generated. Software determine tank location relative to each square and use only the list of objects for that square to determine which terrain features are beneath the tank. Based on average edge densities over the whole gaming area, the processing required to obtain the data needed by the dynamics system is 840 edges/frame.

Thus, the number of edges available for display is:

10,125 - 960 - 840 = 8325 edges.

These edges can, of course, be spread over the 8 channels at the user's discretion. A good approximation would be 1000 display edges per channel and would yield the following distribution.

DIG	4000 edges	- Tank commander, loader out the hatch.
	1000 edges	- Gunner optics.
	1000 edges	- Tank commander optics.
	2000 edges	- Driver

8.7.2 IOS Repeaters. Visual interface with the IOS will be accomplished through the use of 2 visual repeaters. One repeater will be dedicated to the optical sights, with the selection of commander or gunner's optics made by the instructor. The second repeater will allow selection of any of the commander or driver's out-the-hatch scenes.

8.7.3 Iteration Rates. An option available in the visual design is to operate the system at 50Hz instead of 60Hz. The slower rate would permit more edges to be displayed and more resolution to be obtained. The benefits would have to be weighed against the costs of eliminating interference from the 60Hz current used in the simulator electrical system. The configuration described in his report assumes a 60Hz system will be used; however, the slower rate is still a viable alternative.

8.7.4 Special Effects. A combination of DIG and electronic video processing will be used to provide special effects for simulation.

8.7.4.1 Headlights Simulation. The visual system will accept a signal from Vehicle systems indicating the headlights have been turned on. The DIG, in turn, will compute a headlight beam pattern on the ground and change the intensity of the faces in this region to simulate the lights.

8.7.4.2 Variable Weather. DIG systems are capable of generating visibility conditions ranging from unlimited to zero-visibility. Unlike the electronic superimposition of haze in earlier camera/model systems, DIG properly applies the haze so that all objects will exhibit proper aerial perspective. The tops of tall objects in the foreground which extend above the horizon will not be cut off, as with camera model systems.

8.7.4.3 Weapon Effects. Main gun flash can be simulated in two ways. The primary method will be the use of an electronic flash unit located on the gun barrel. In the second method, the DIG will flash a bright white image in the optical instruments.

Main gun smoke will be electronically inserted in the visual scene and envelops any scene imagery which falls within the bounds of the smoke circle. The density of the smoke will gradually diminish over a few frames. As the smoke clears, a tracer will be visible and will move at the proper rate toward the target. Once impact is detected, the DIG will generate weapon impact effect.

8.8 Visual System Flexibility

8.8.1 Experimental Flexibility. The use of a DIG in the visual system allows a great deal of flexibility in scene content. Different data bases can be configured and/or existing data bases can be changed and enlarged. This enables simulation of such diverse environments as rural and urban areas, forests and deserts, and winter and summer scenes. Once data bases are generated and available, they can be selected by the instructor through keyboard commands.

Within the constraints of 8000 edges scene experiments can be conducted in which varying proportions of the edges are assigned to different scenes. For example; the driver's station can be used alone and given all 8000 edges to ascertain marginal benefits obtained by increasing the scene content. Similarly, scene content can be reduced to ascertain an allocation of edges to achieve various levels of training.

In the turret station, additional edges can be taken from the driver station and used to enhance out-the-hatch scenes and/or optical instrument scenes. These additional edges can be used to provide more realistic target models or to more cleverly hide the targets within the scene. The results would be a collection of increasingly difficult training situations.

Similar experiments of this type could be developed for buttoned-up operations, night conditions, and the like, in order to ascertain the amount of detail required to effectively train the crew under specific conditions.

In addition to the inherent DIG capability with regards to data bases construction and display, the visual system will provide instructor control over the special visual effects. Such effects as weapon flash, tracer simulation and weapon effects on impact can be controlled by the instructor through keyboard entries which enable or disable such special effects or control their visual presentation.

Experimentation with cue supplementation will also be possible. The instructor can introduce glint or smoke puffs or could have these effects automatically controlled as a function of the range of the target from the observer. The requirement for such cues or the type of cues which prove most effective can be empirically determined through a series of experiments in this area.

One type of experiment which is nearly always impossible to perform for a reasonable cost, on a simulator, is a tradeoff between field of view and resolution. The system selected for use on FCIS does provide some flexibility in this regard, on the driver's station. Provisions have been made to allow the wide FOV to be reduced to about half of its original size with an accompanying doubling of the resolution. This capability may prove a valuable tool to the army in the procurement of future driver simulators as well as future FCIS units.

Although a similar capability on the turret station was not cost effective now, the system will permit dynamic changes in the magnification of the various perceived instruments. By changing the FOV in the DIG for the optical instrument, a more magnified image will appear, at the student's eye. This increase in size of objects in the scene may allow the student to fire more accurately at distant objects. It will allow the Army to determine how big a target (hence how much resolution) is needed by the student to accurately lay fire.

Additional experiments can be performed in the visual/motion interface area. The simulator can be run with no motion or decreased motion capabilities. Varying lag times can be introduced, and the terrain can be modeled to limit the maximum motion requirements. Such a series of experiments would allow the FCIS evaluation team to determine the precise motion requirements needed in the production FCIS models.

8.3.2. System Expandability. In addition to the flexibility, the visual system as configured, has the potential to be expanded to provide more complete simulation for the FCIS crew.

Several areas for expansion have been provided. To begin with, 8000 edge scene at the turret station can be enlarged, spread over a full 360° with the addition of 4 more projectors and DIG channels.

Similarly, the drivers FOV can be expanded to provide a wider FOV which could completely fill his 3 vision blocks and provide 200° for out the hatch driving.

The resolution of the system can be enhanced by designing the video generators to run at a higher output rate than the current 37 n sec/pixel rates. The increased number of picture elements would be spread over the same area and result in better resolution.

A final area of expansion is the use of a multiple DIG arrangement. Such a configuration would increase the scene content available to all crewmembers. The increased DIG capacity could be used to generate a denser scene in the same sized field of view.

FIGURE 8-29 EXPANDED WAC WINDOWS - DRIVER

FIGURE 8-30 EXPANDED WAC WINDOWS - TANK COMMANDER/LOADER

FIGURE 8-34 TANK COMMANDER'S DISPLAY - 14' DOME

FIGURE 8-35 TANK DRIVER'S DISPLAY - 14' DOME

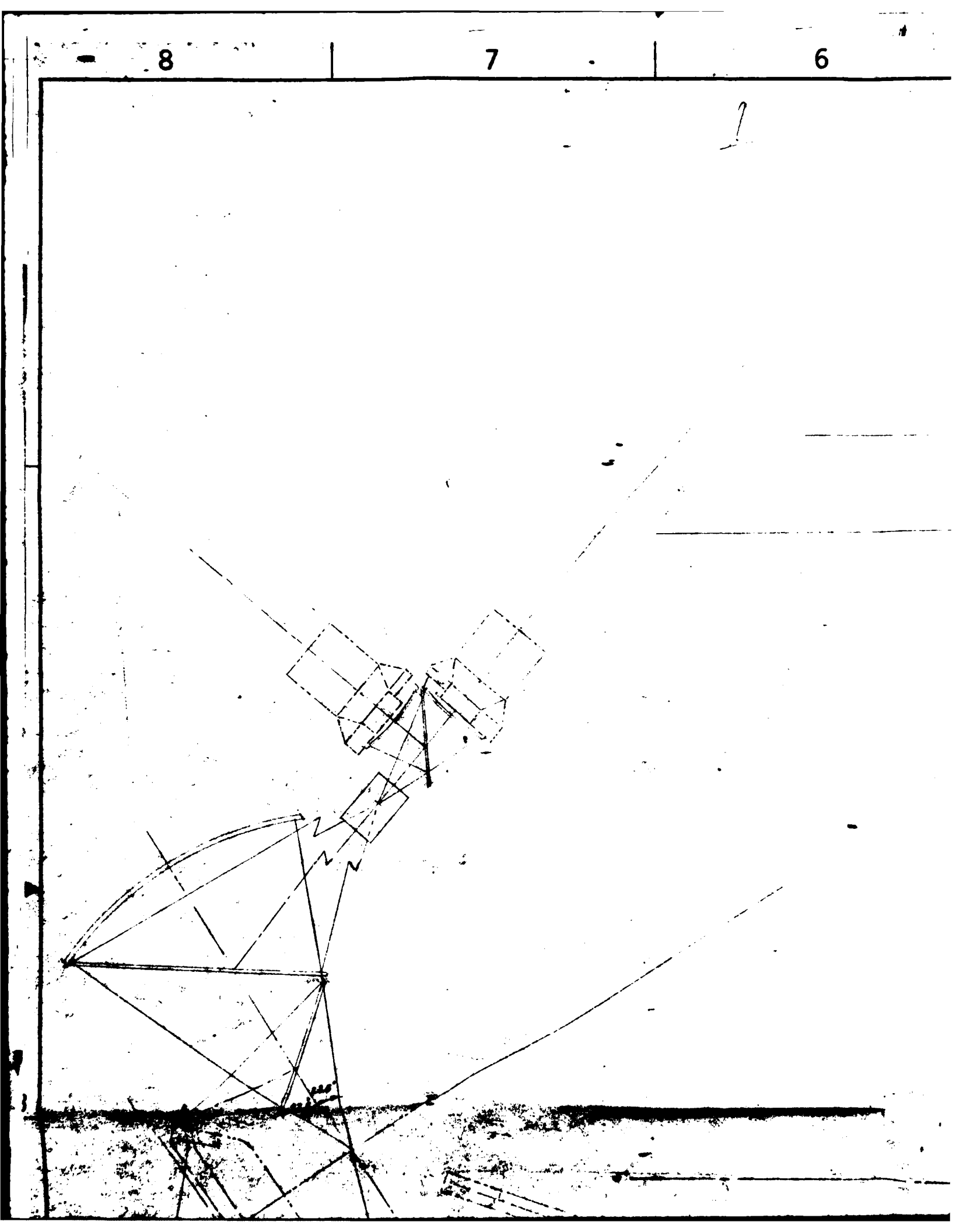

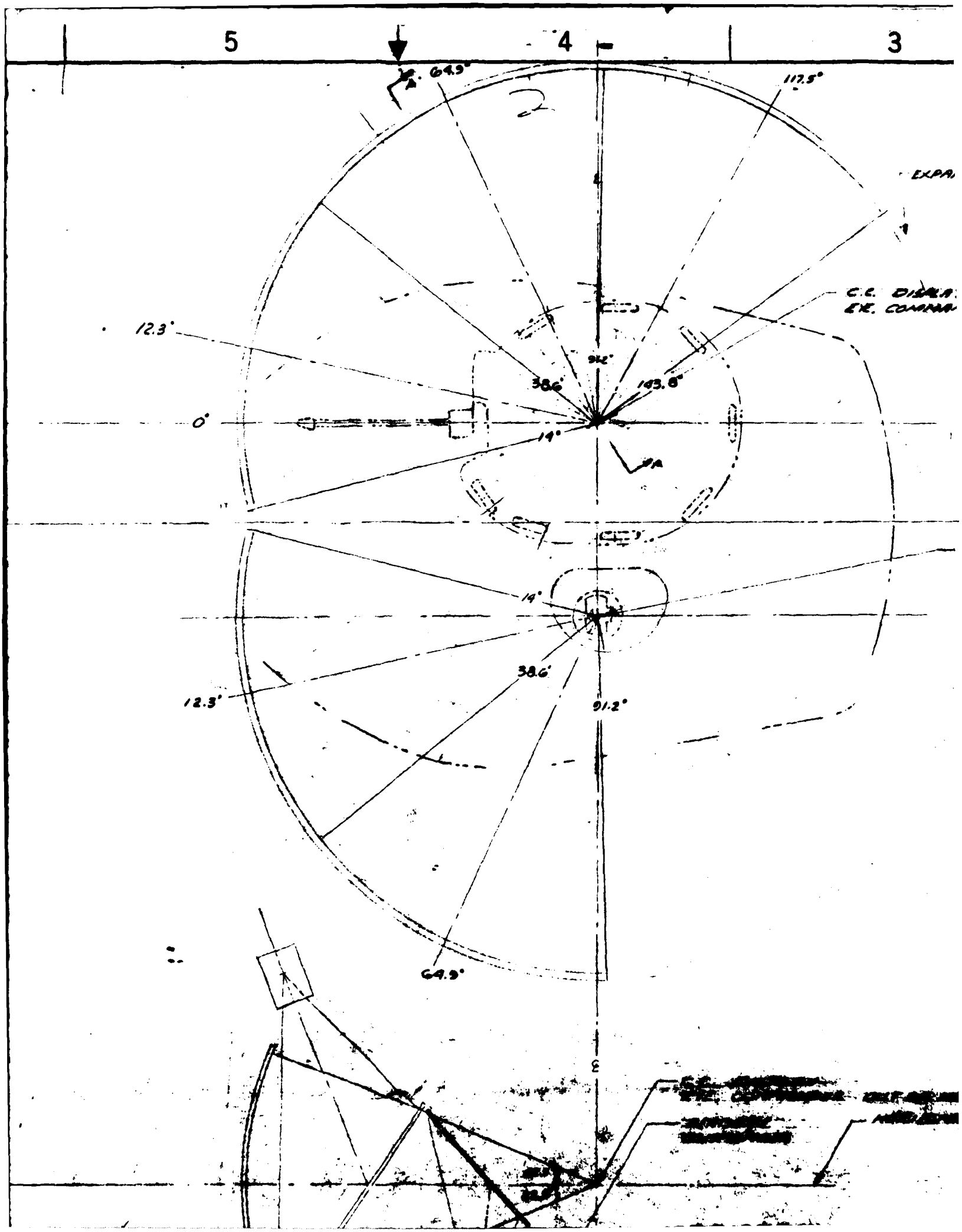
5
4
3
64.9°
117.5°
12.3°
91.2°
38.6°
143.8°
0°
14°
14°
38.6°
12.3°
91.2°
64.9°

3 2 1

REVISIONS				
ZONE	LTR	DESCRIPTION	DATE	APPROVED
	—	RELEASE		

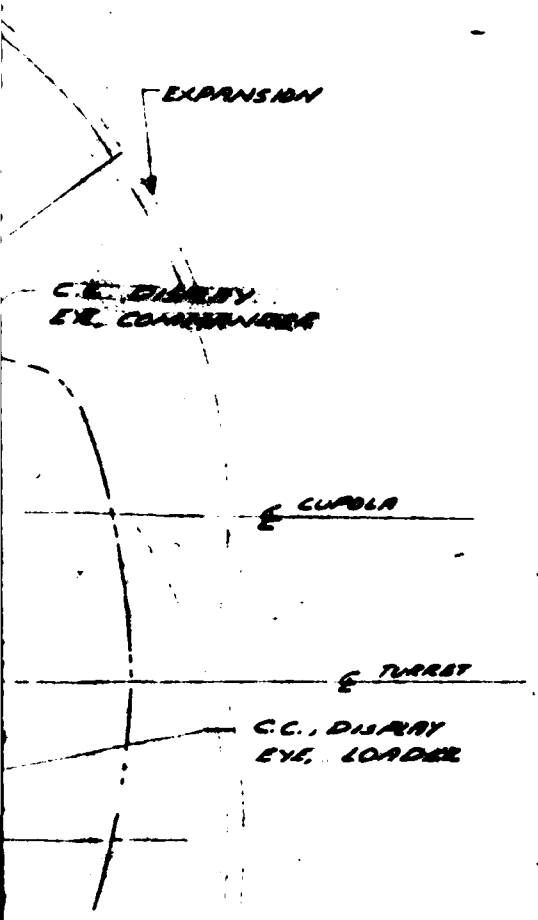

D

C

B

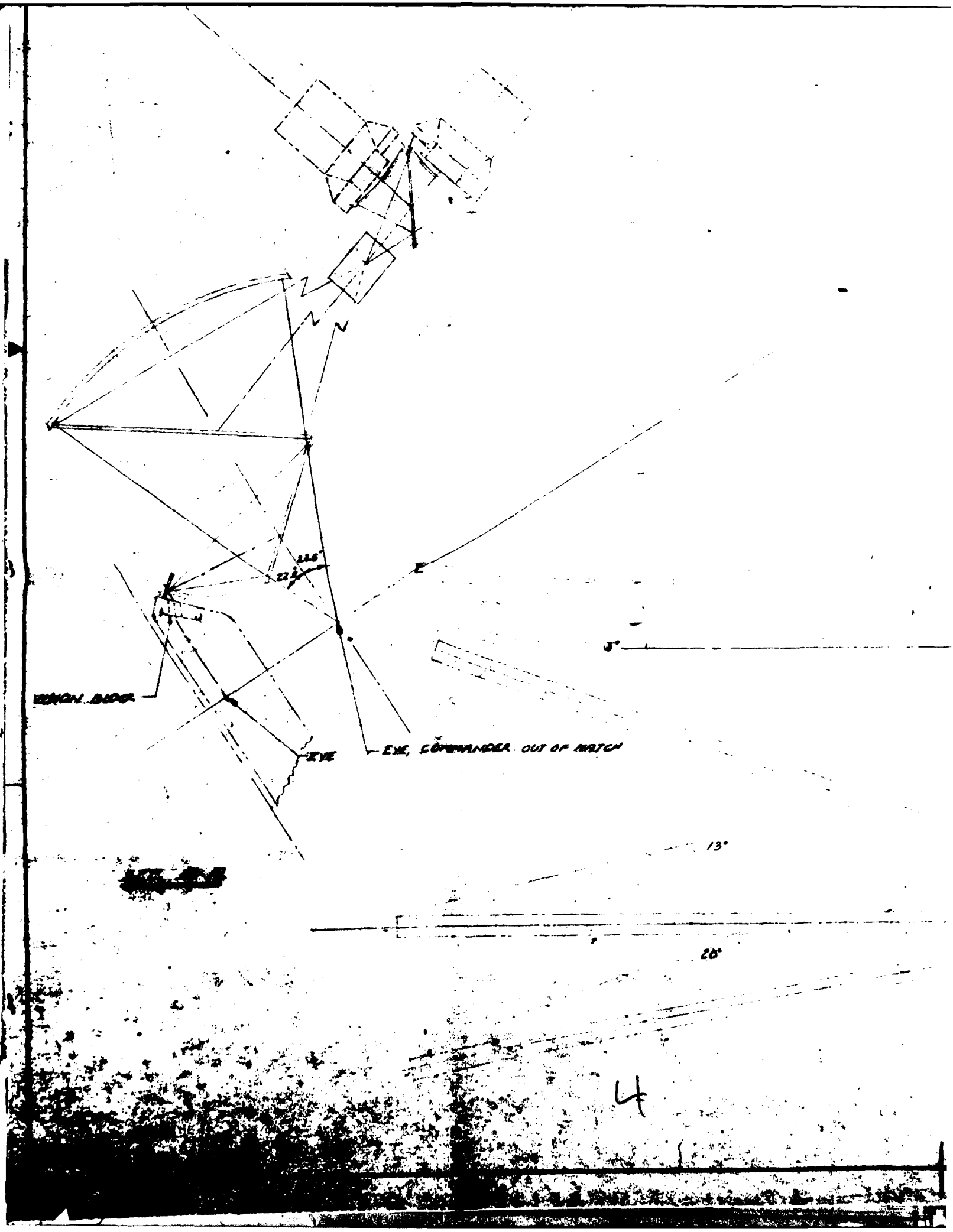
22.5°
22.5°
VISION BLOCK
EYE
EYE, COMMANDER OUT OF MATCH
13°
20°
4

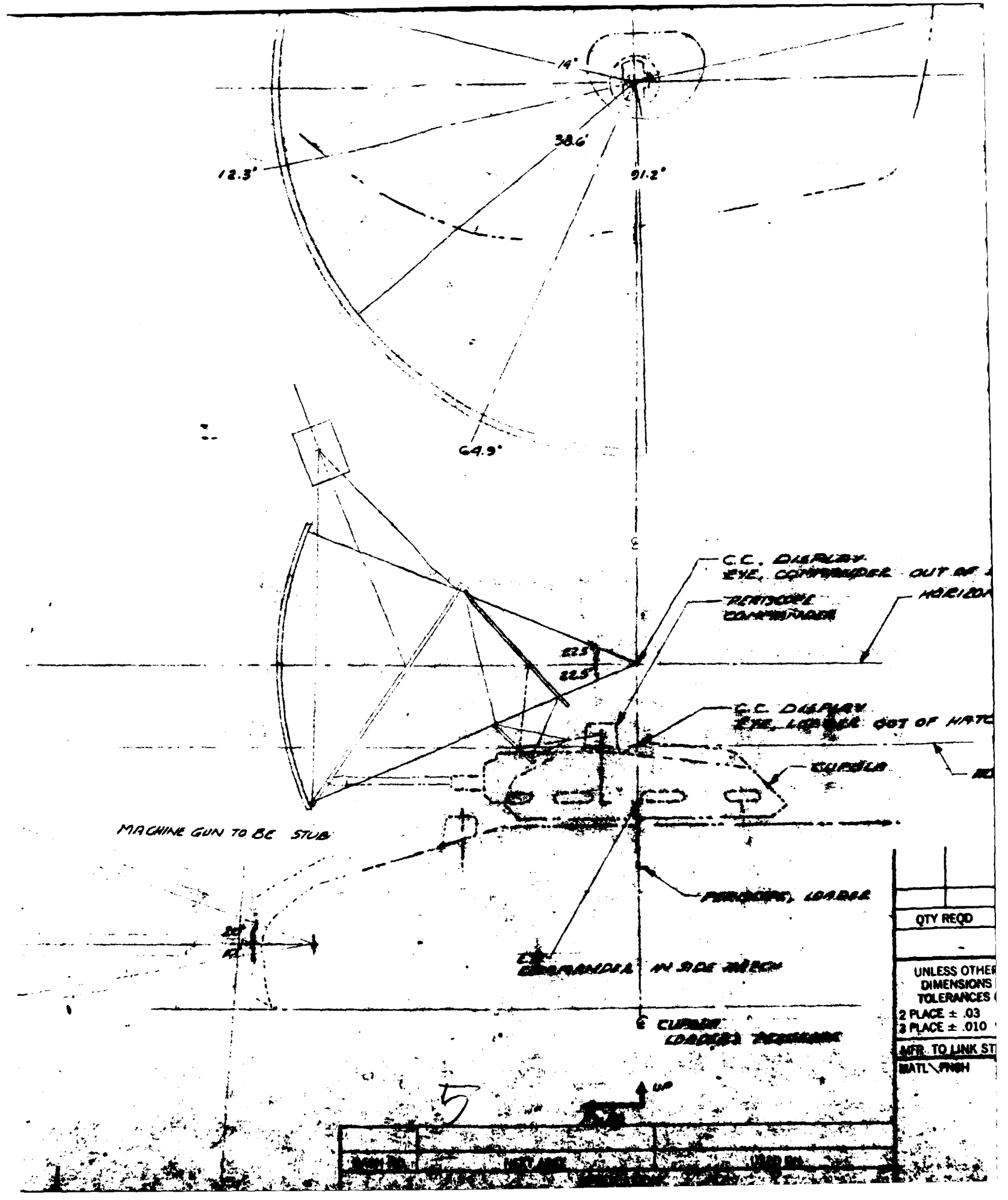
14°
38.6°
12.3°
91.2°
64.9°
22.5°
22.5°
C.C. DISPLAY
EYE, COMMANDER
PERISCOPE
COMMANDER
C.C. DISPLAY
EYE, LOADER
CUPOLA
MACHINE GUN TO BE STUB
PERISCOPE, LOADER
COMMANDER IN SIDE WALL
CURVE
LOADER'S PERISCOPE
QTY REQD
UNLESS OTHER
DIMENSIONS
TOLERANCES
2 PLACE ± .03
3 PLACE ± .010
MFR TO LINK ST
MATL \ FINISH
UP
5

C

B

A

CODE IDENT	PART OR IDENTIFYING NO.	NOMENCLATURE OR DESCRIPTION	FIND NO.

PARTS LIST

UNLESS OTHERWISE SPECIFIED DIMENSIONS ARE IN INCHES TOLERANCES ON DIMENSIONS: FRACTIONAL ± DEC. ANGULAR ±	CONTRACT NO.	SINGER LINK DIVISION BINGHAMTON, NEW YORK
	PREPARED BY DATE 1-23-78	EXPANDED WRC WINDOWS FCLS-T COMMANDER-LOADER
	CHECKED	
	ENGRG	
	MANUFACTURING	
		THIS PAGE IS BEST QUALITY PRACTICABLE FROM COPY FURNISHED TO DDC
		SIZE D DWG NO. 6378 FIG. 8-30 REV

8

7

H

G

F

E

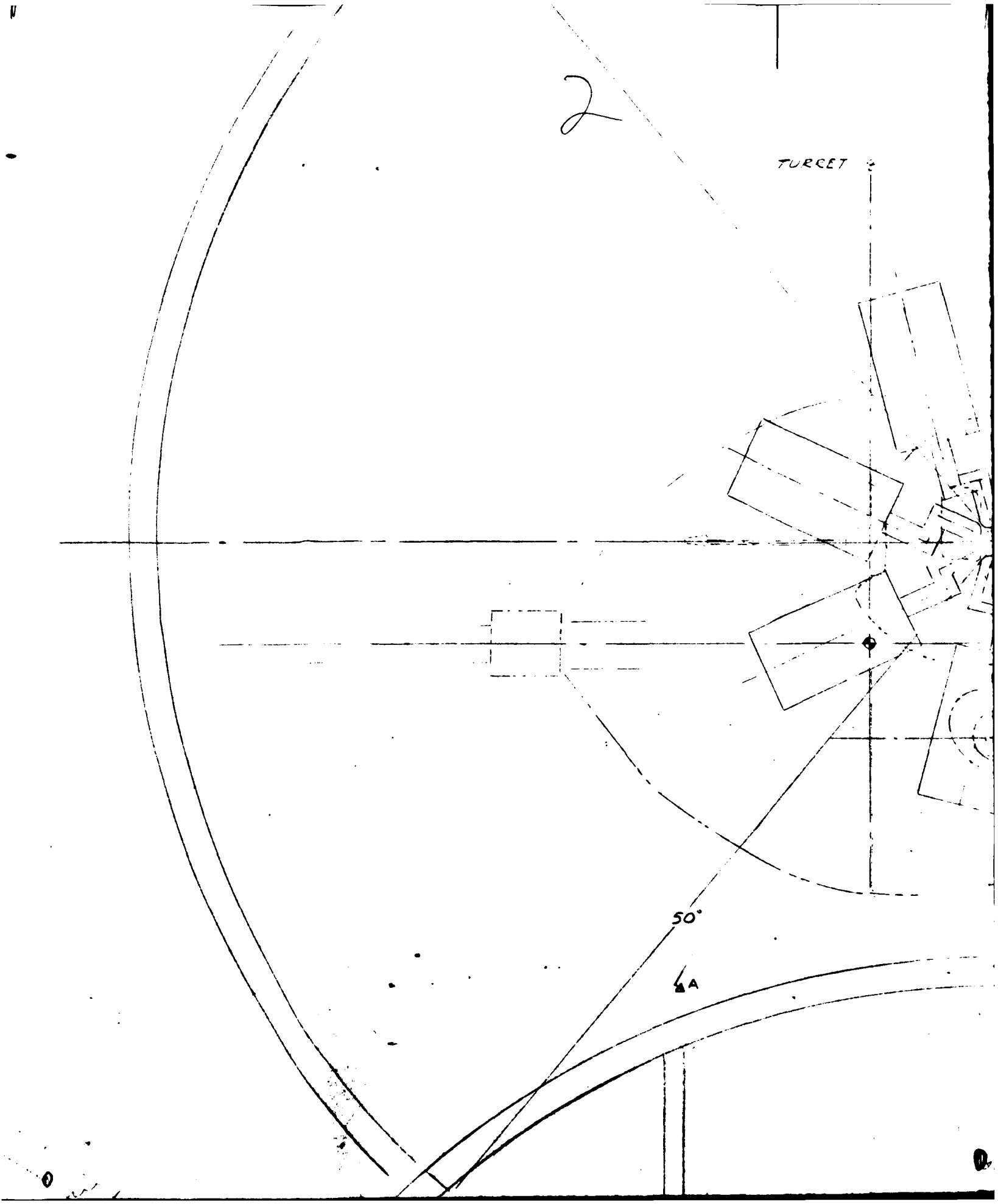
2
TURRET
50°
A

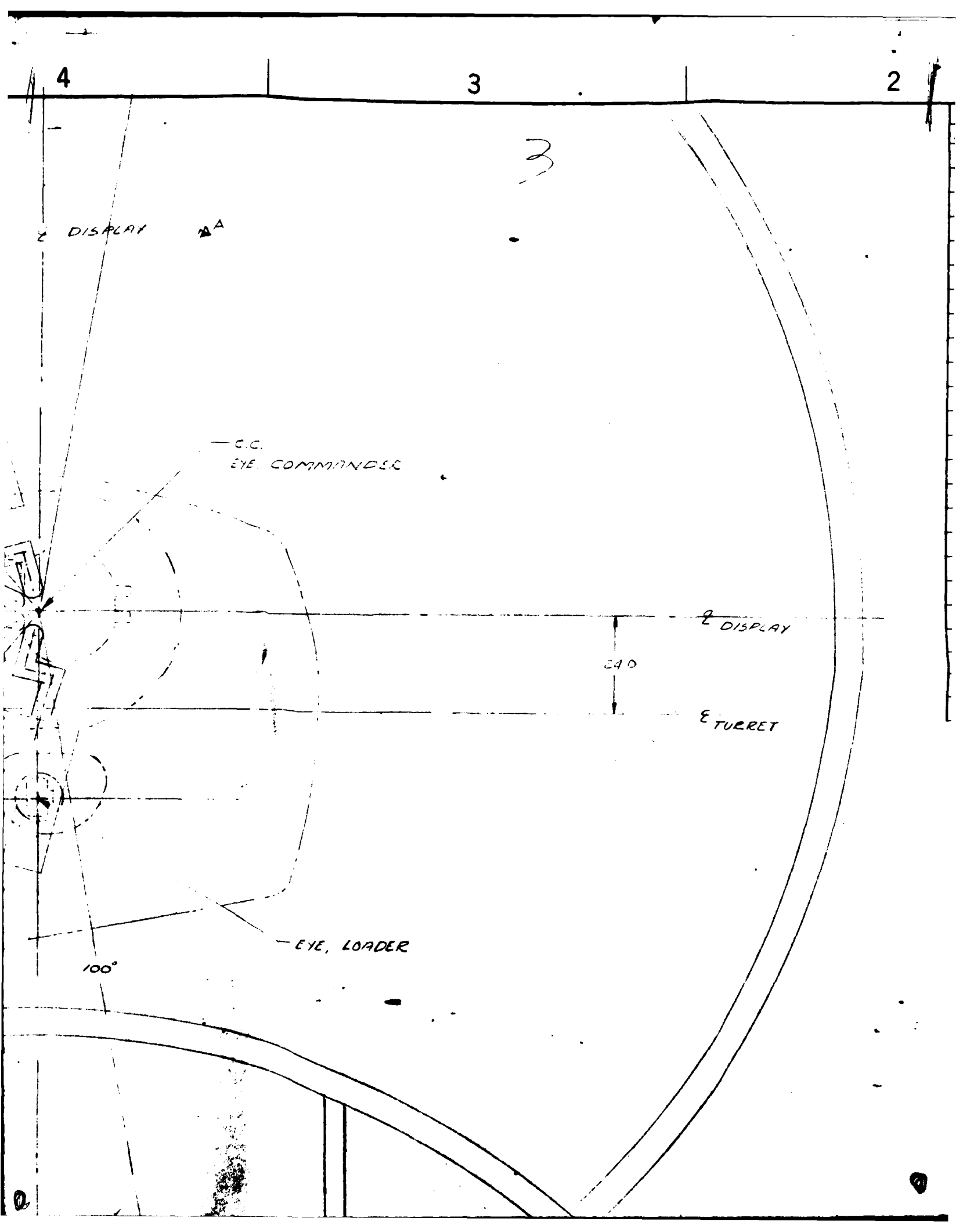
4
3
2
3
℄ DISPLAY
A
C.C.
EYE COMMANDER
℄ DISPLAY
CAD
℄ TURRET
EYE, LOADER
100°

2 1

REVISIONS				
ZONE	LTR	DESCRIPTION	DATE	APPROVED
	—	RELEASE		

H

G

F

℄ DISPLAY

℄ TURRET

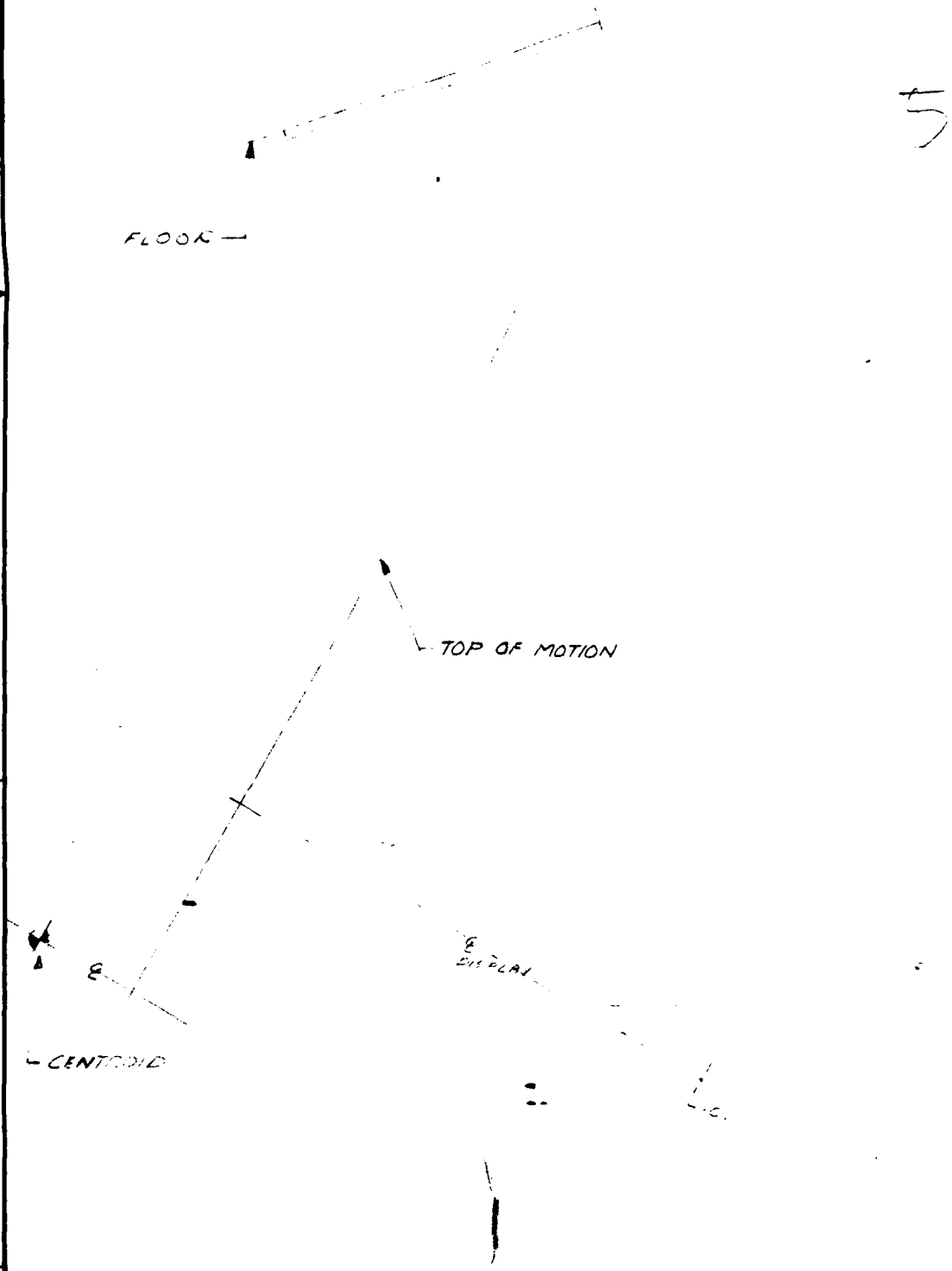

VIEW A-A
(FAILER MODE)

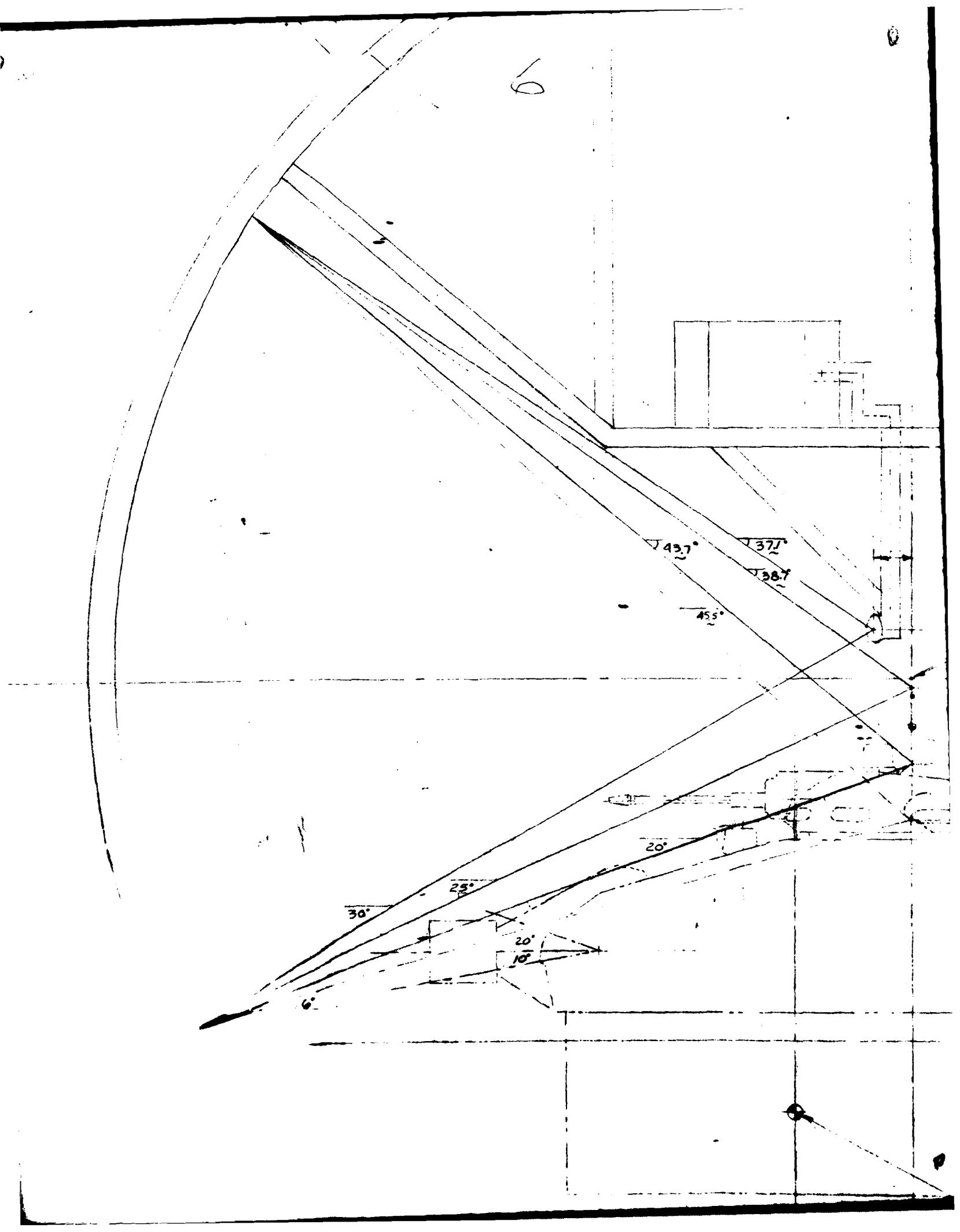
43.7°
37.1°
38.7°
45.5°
20°
25°
30°
20°
10°
6°

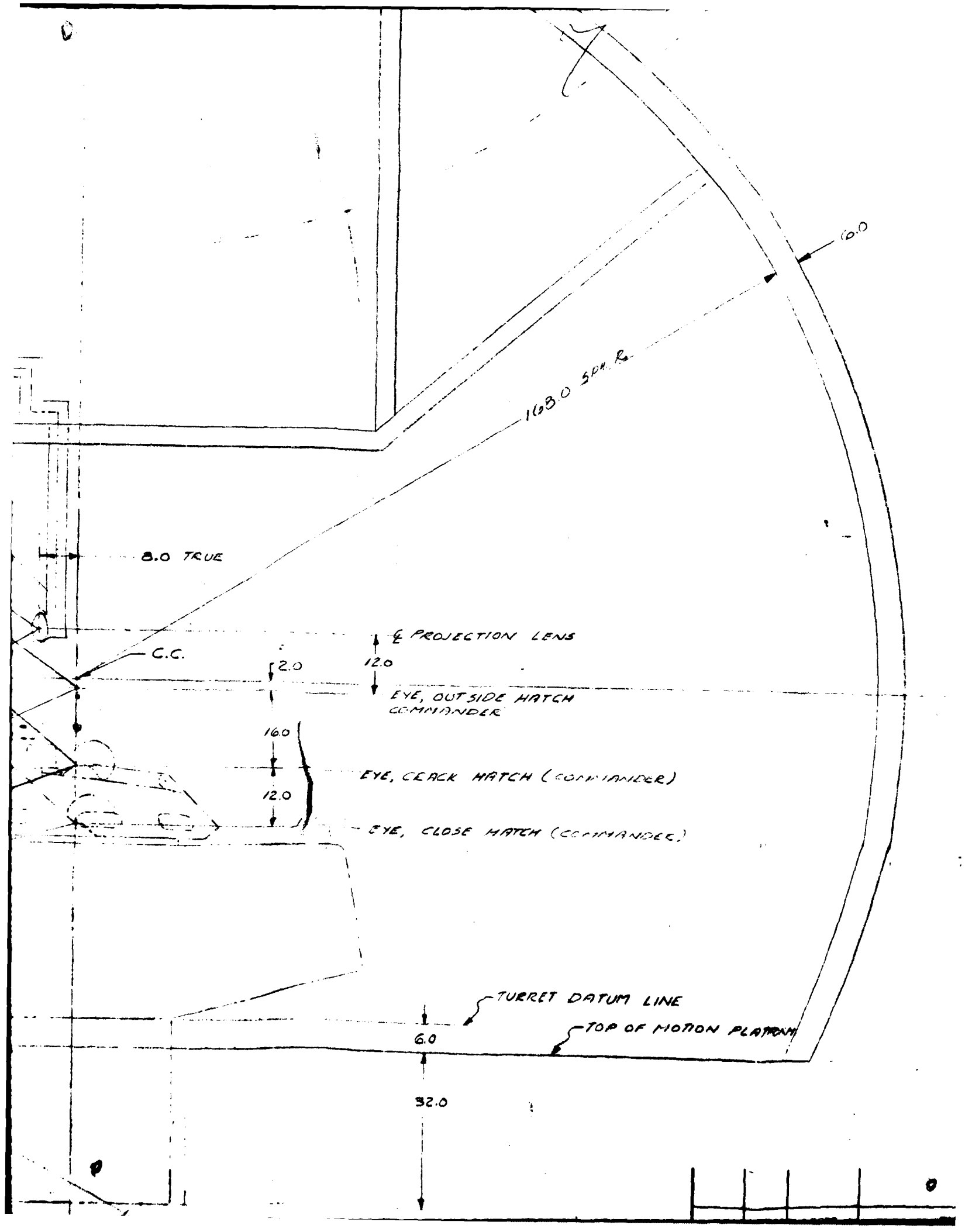
6.0
168.0 SPH. R.
8.0 TRUE
C.C.
℄ PROJECTION LENS
2.0
12.0
EYE, OUTSIDE HATCH
COMMANDER
16.0
EYE, CRACK HATCH (COMMANDER)
12.0
EYE, CLOSE HATCH (COMMANDER)
TURRET DATUM LINE
TOP OF MOTION PLATFORM
6.0
32.0

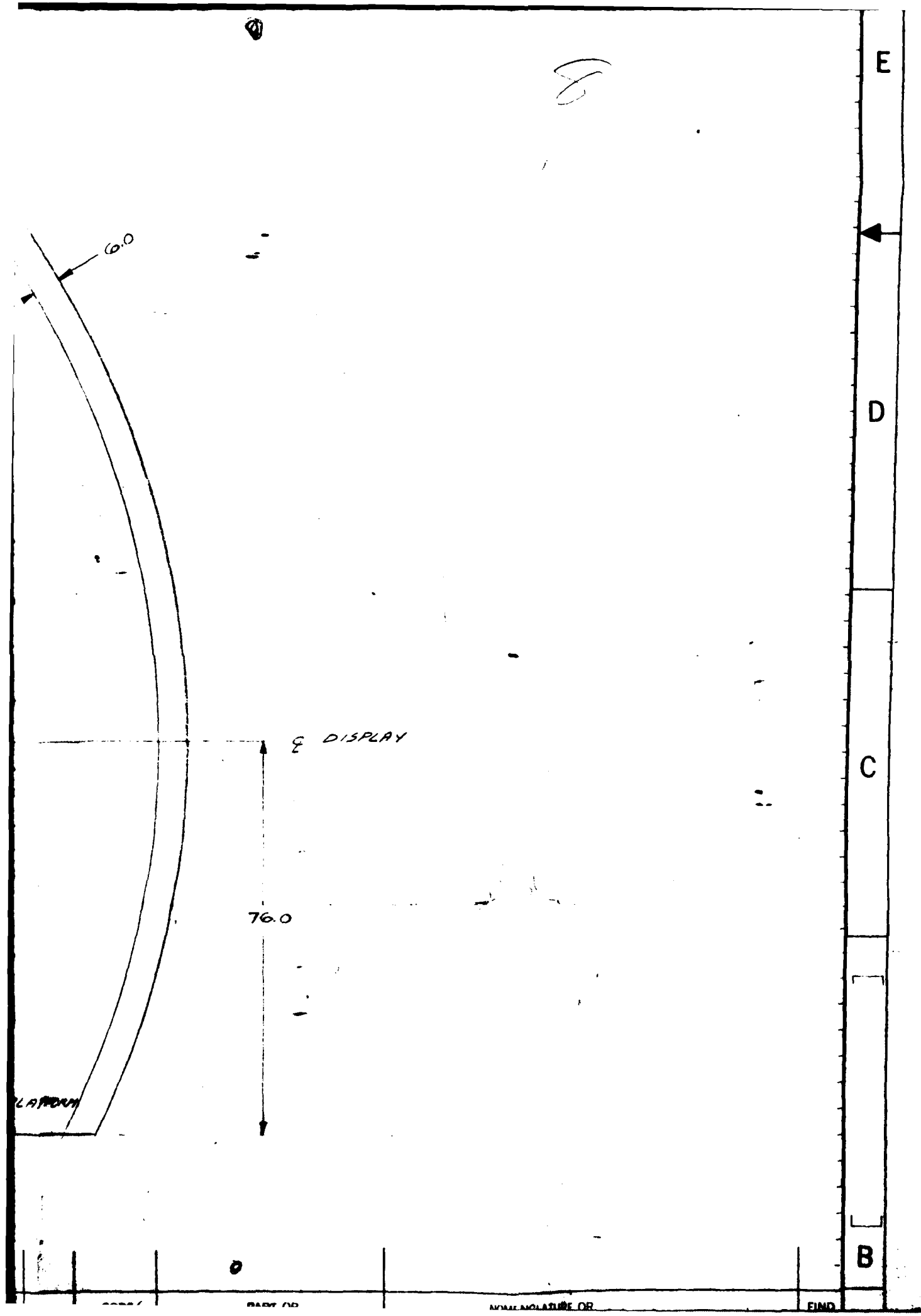
6.0
℄ DISPLAY
76.0
E
D
C
B
PART OR
NOMENCLATURE OR
FIND

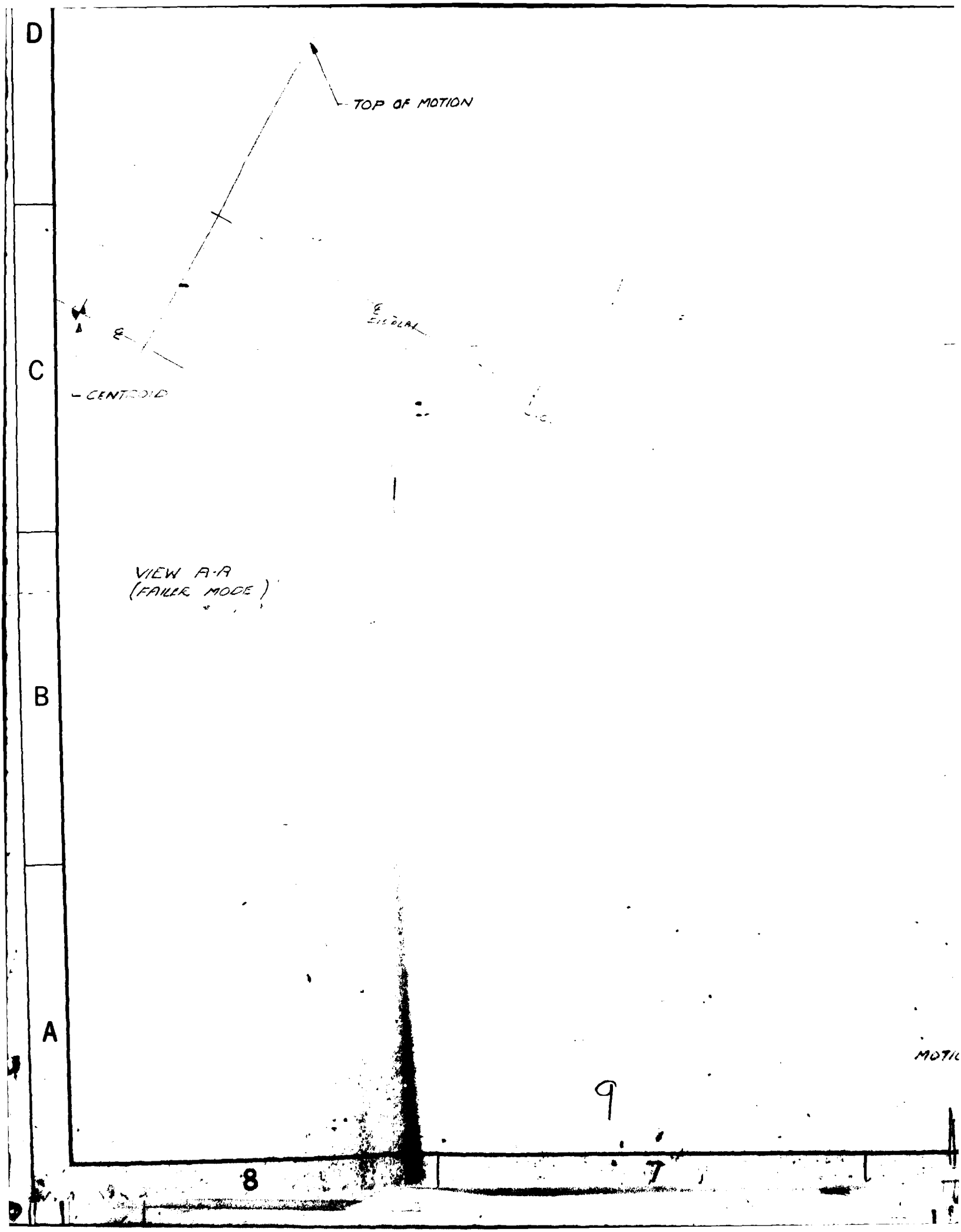
D
C
B
A
TOP OF MOTION
CENTROID
VIEW A-A
(FAILER MODE)
9
8
7

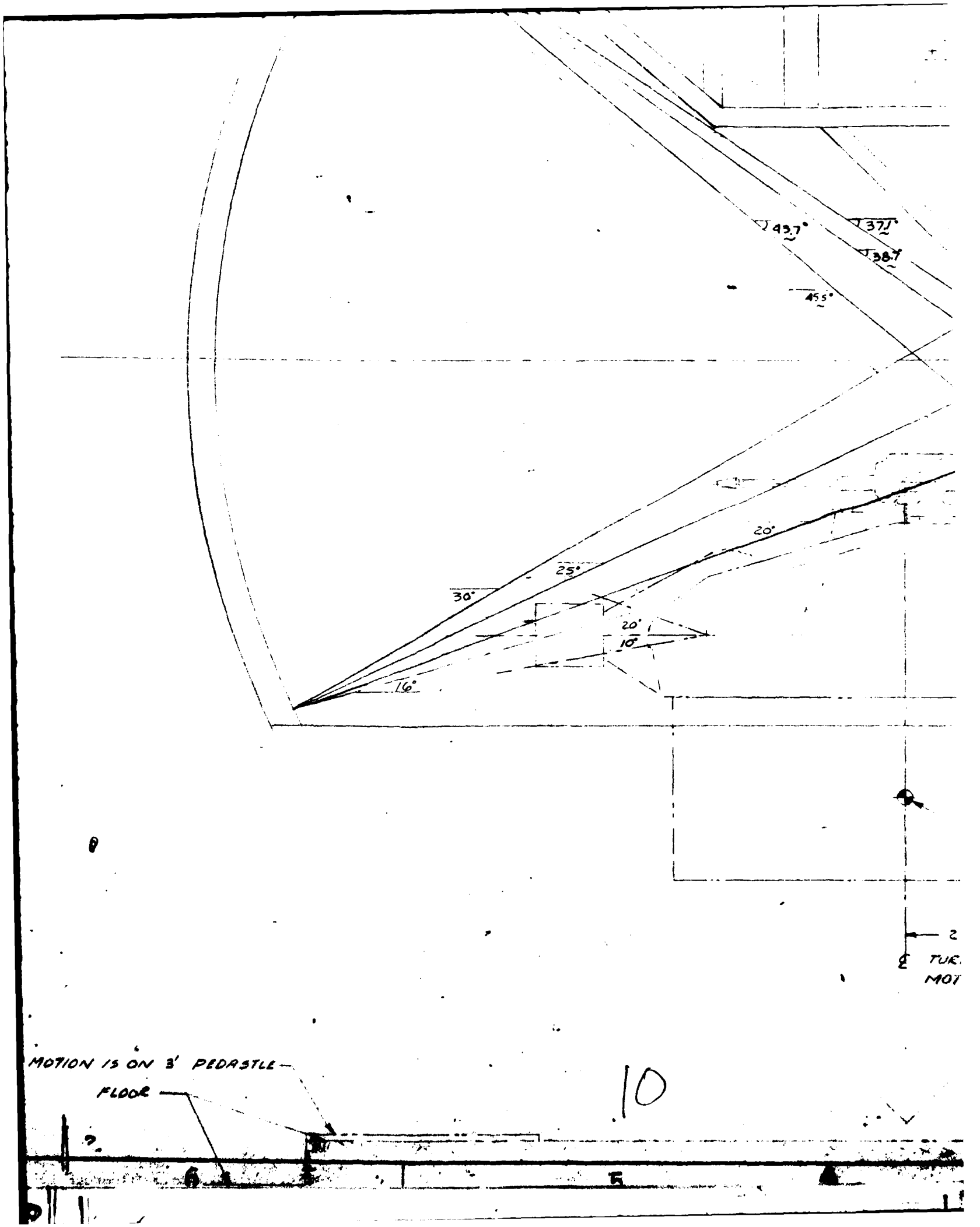
43.7°
37.1°
38.7°
45.5°
20°
25°
30°
20°
10°
16°
MOTION IS ON 3' PEDASTLE
FLOOR
10

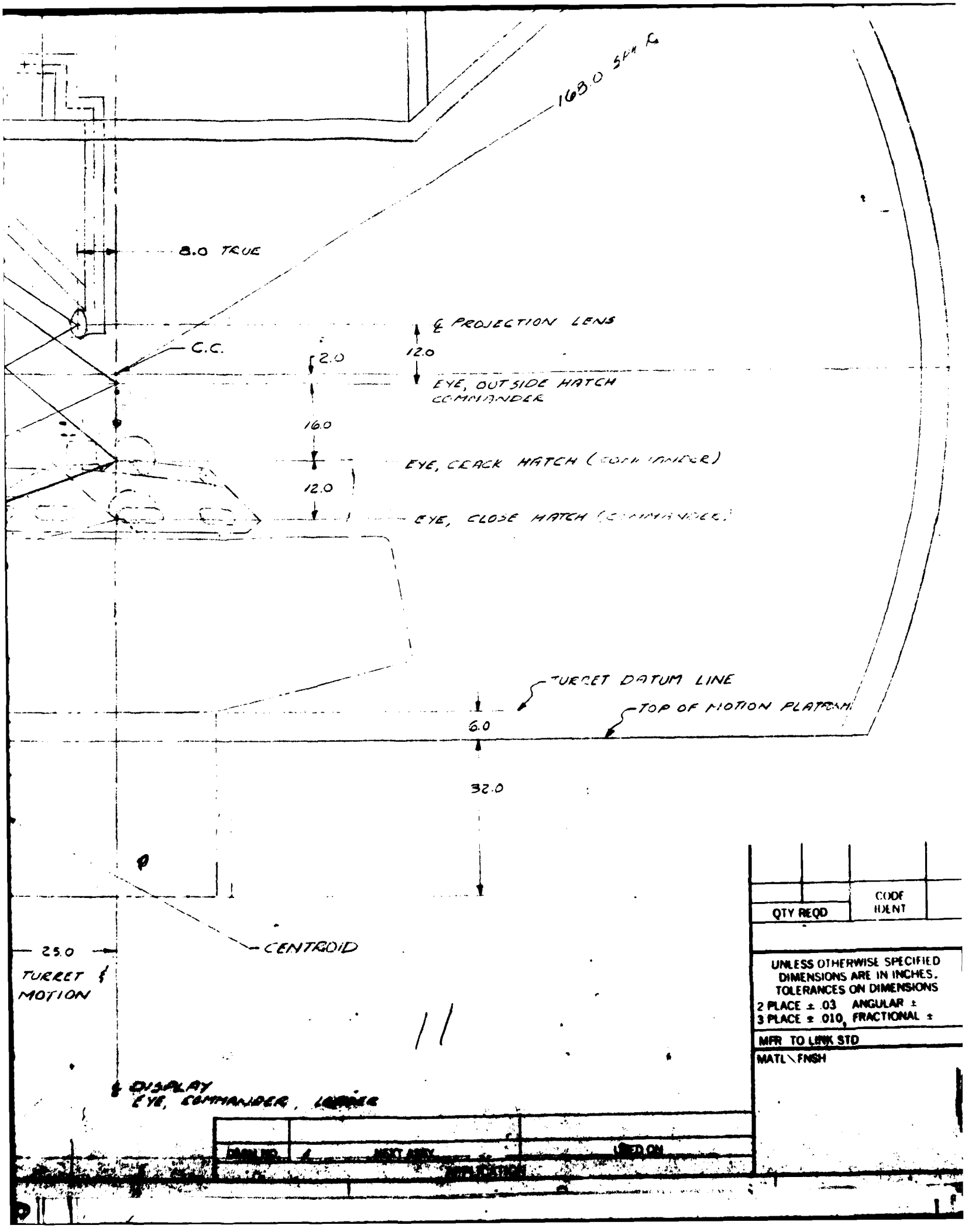
168.0 SPH R
8.0 TRUE
℄ PROJECTION LENS
C.C.
2.0
12.0
EYE, OUTSIDE HATCH COMMANDER
16.0
EYE, CRACK HATCH (COMMANDER)
12.0
EYE, CLOSE HATCH (COMMANDER)
TURRET DATUM LINE
TOP OF MOTION PLATFORM
6.0
32.0
CENTROID
25.0
TURRET ℄ MOTION
℄ DISPLAY EYE, COMMANDER, LEFT
QTY REQD
CODE IDENT
UNLESS OTHERWISE SPECIFIED DIMENSIONS ARE IN INCHES. TOLERANCES ON DIMENSIONS
2 PLACE ± .03 ANGULAR ±
3 PLACE ± .010 FRACTIONAL ±
MFR TO LINK STD
MATL \ FNSH
USED ON

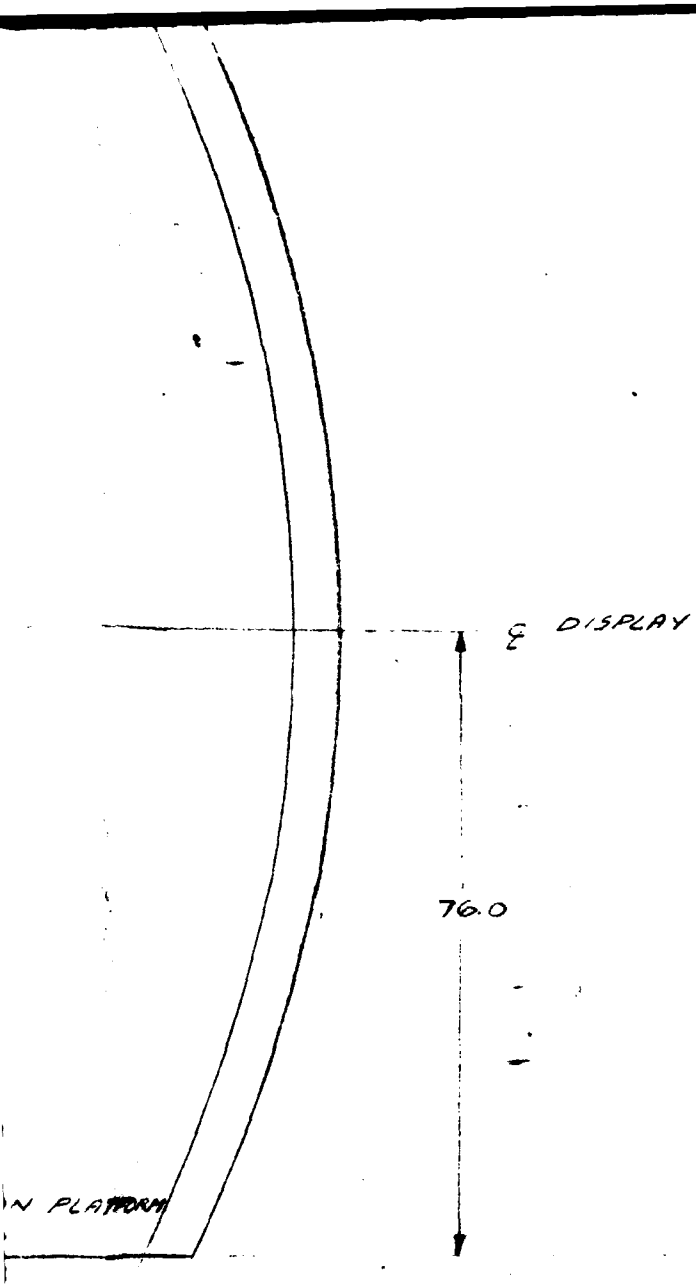

QTY REQ	CODE IDENT	PART OR IDENTIFYING NO.	NOMENCLATURE OR DESCRIPTION	FIND NO.

PARTS LIST

UNLESS OTHERWISE SPECIFIED DIMENSIONS ARE IN INCHES. TOLERANCES ON DIMENSIONS PLACE ± ANGULAR ± PLACE ± FRACTIONAL ±

MFR TO LI

MATL \ FNS

CONTRACT NO.

PREPARED BY Ronald P. Colis DATE 12-13-77

CHECKED

ENGR

APPROVAL

SINGER
LINK DIVISION
BINGHAMTON, NEW YORK

DISPLAY - FC15 . T.C.
14' R DOME
FIGURE 8-34

SIZE E | CODE IDENT 3637 | DWG NO. | REV

SCALE 1/16 | SHEET OF

THIS PAGE IS BEST QUALITY PRACTICABLE FROM COPY FURNISHED TO DDC

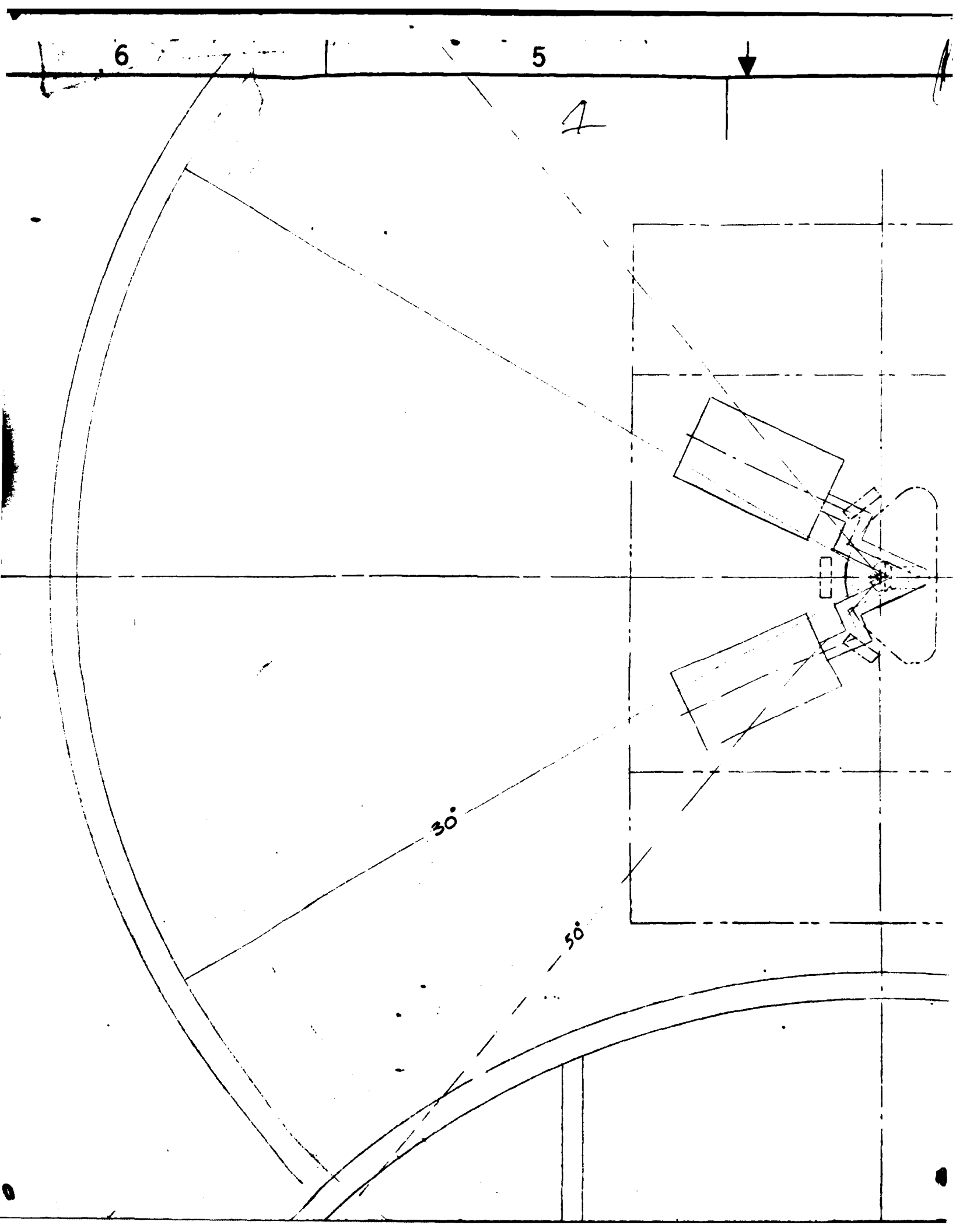
6
5
4
30°
50°

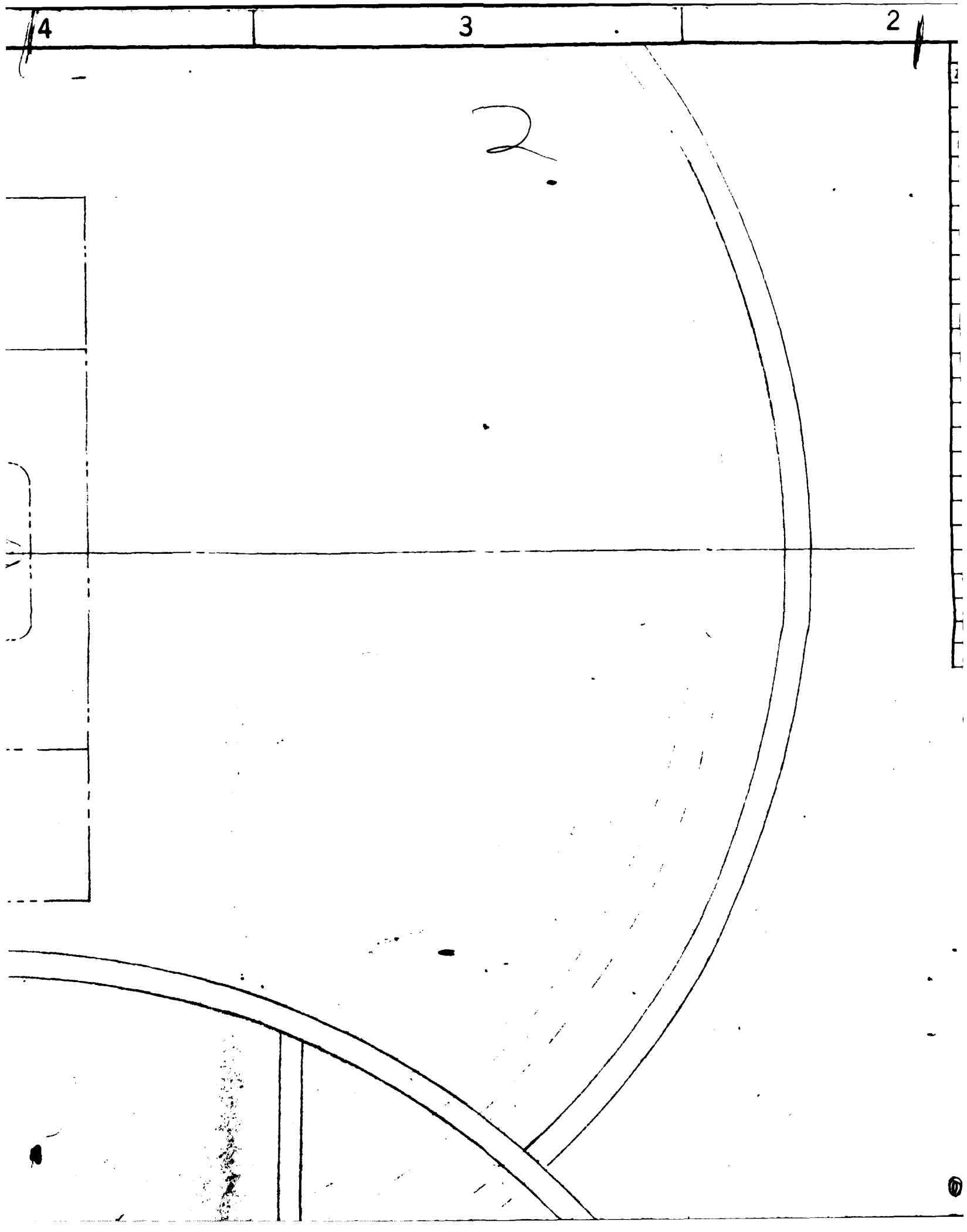
4
3
2
2

REVISIONS				
ZONE	LTR	DESCRIPTION	DATE	APPROVED
	—	RELEASE		

H

G

F

E

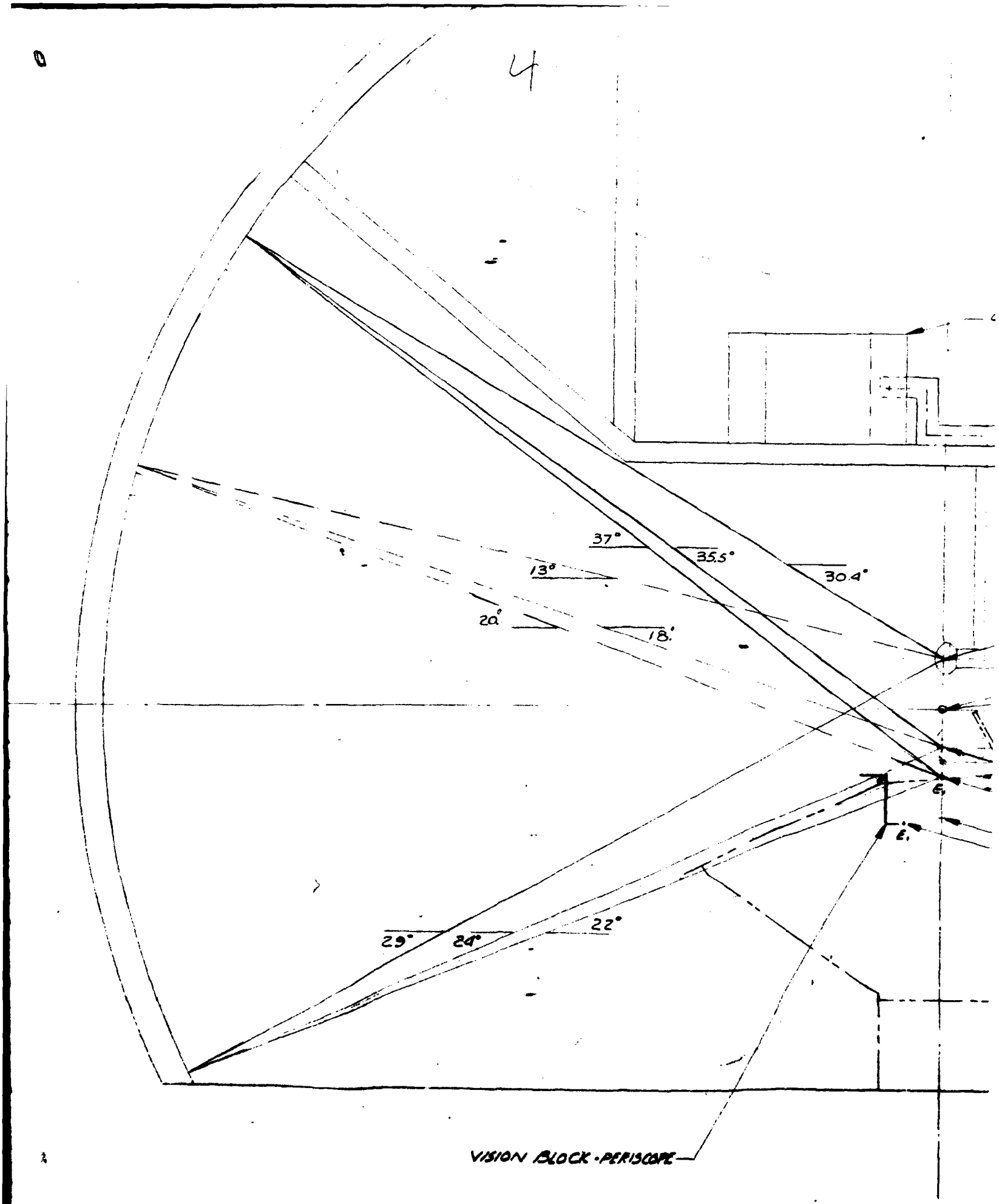
4
37°
35.5°
30.4°
13°
20°
18°
29°
24°
22°
E₁
E₁
VISION BLOCK - PERISCOPE

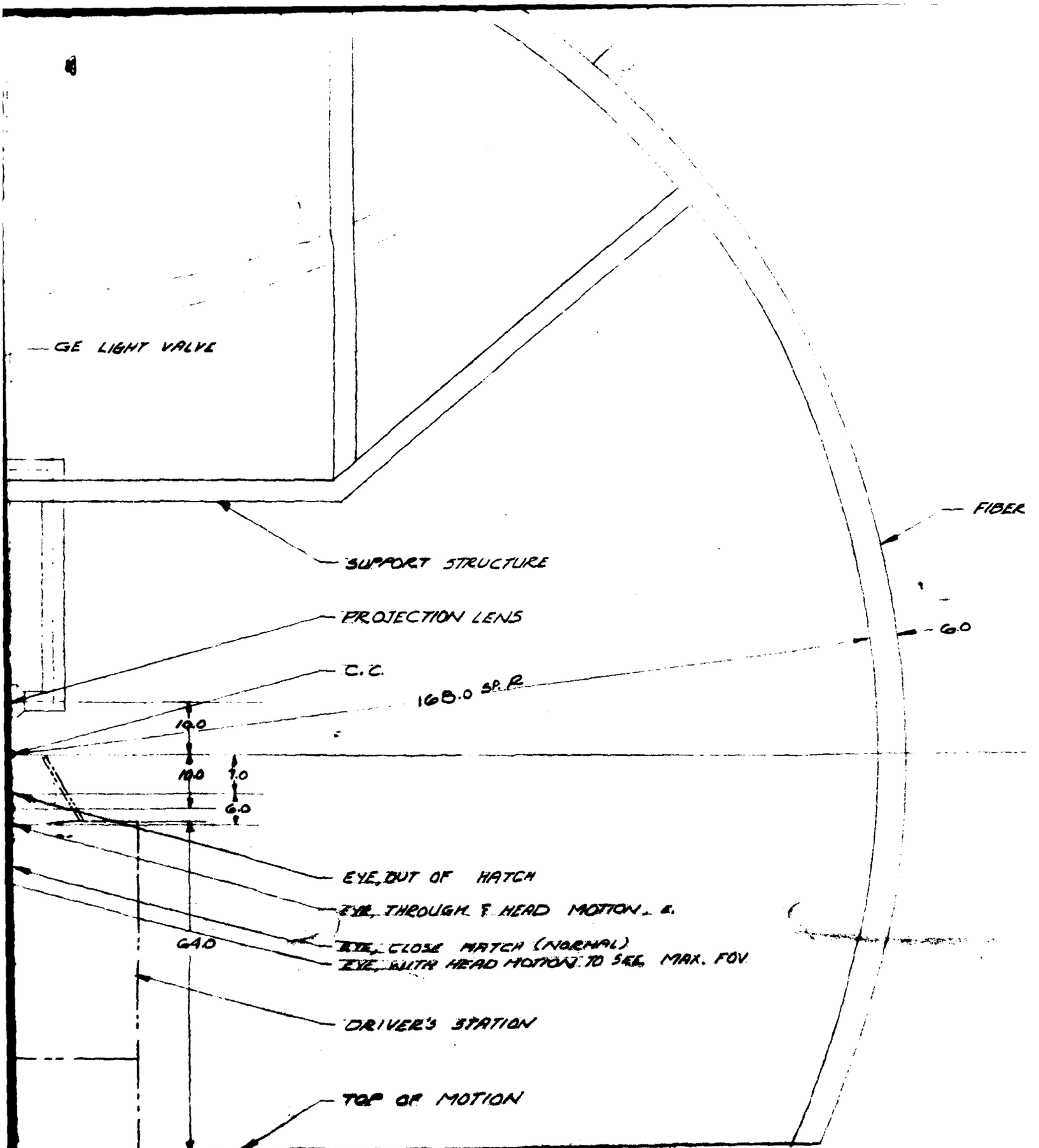
GE LIGHT VALVE
FIBER
SUPPORT STRUCTURE
PROJECTION LENS
6.0
C.C.
168.0 SP. R
10.0
10.0
1.0
6.0
EYE, OUT OF HATCH
EYE, THROUGH & HEAD MOTION
EYE, CLOSE HATCH (NORMAL)
EYE, WITH HEAD MOTION TO SEE MAX. FOV
64.0
DRIVER'S STATION
TOP OF MOTION

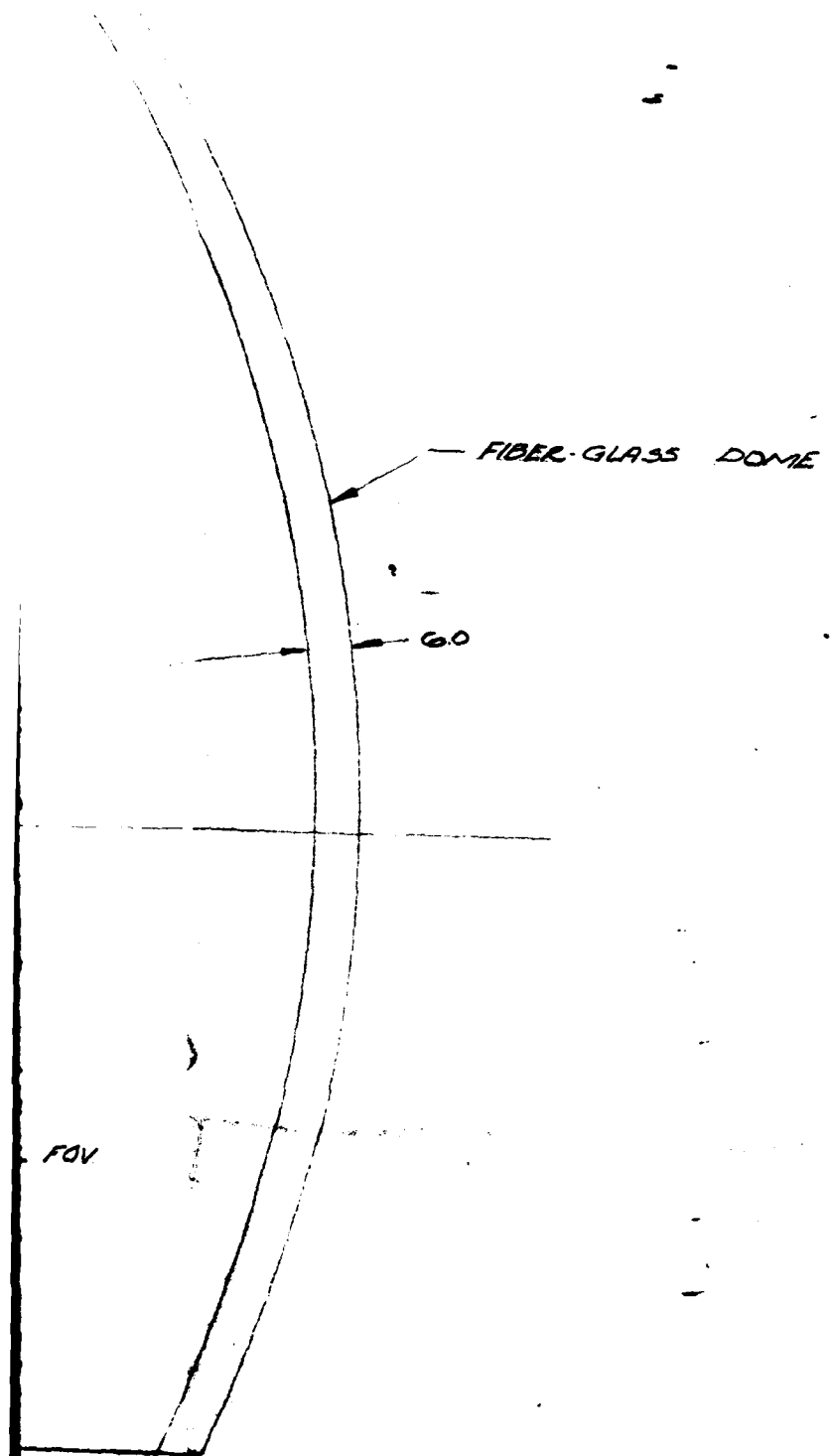

QTY R	CODE IDENT	PART OR IDENTIFYING NO.	NOMENCLATURE OR DESCRIPTION	FIND NO.

PARTS LIST

UNLES[illegible] SPECIFIED DIME[illegible] INCHES. [illegible] DIMENSIONS.

CONTRACT NO.

SINGER
LINK DIVISION

THIS PAGE IS BEST QUALITY PRACTICABLE FURNISHED TO DDC

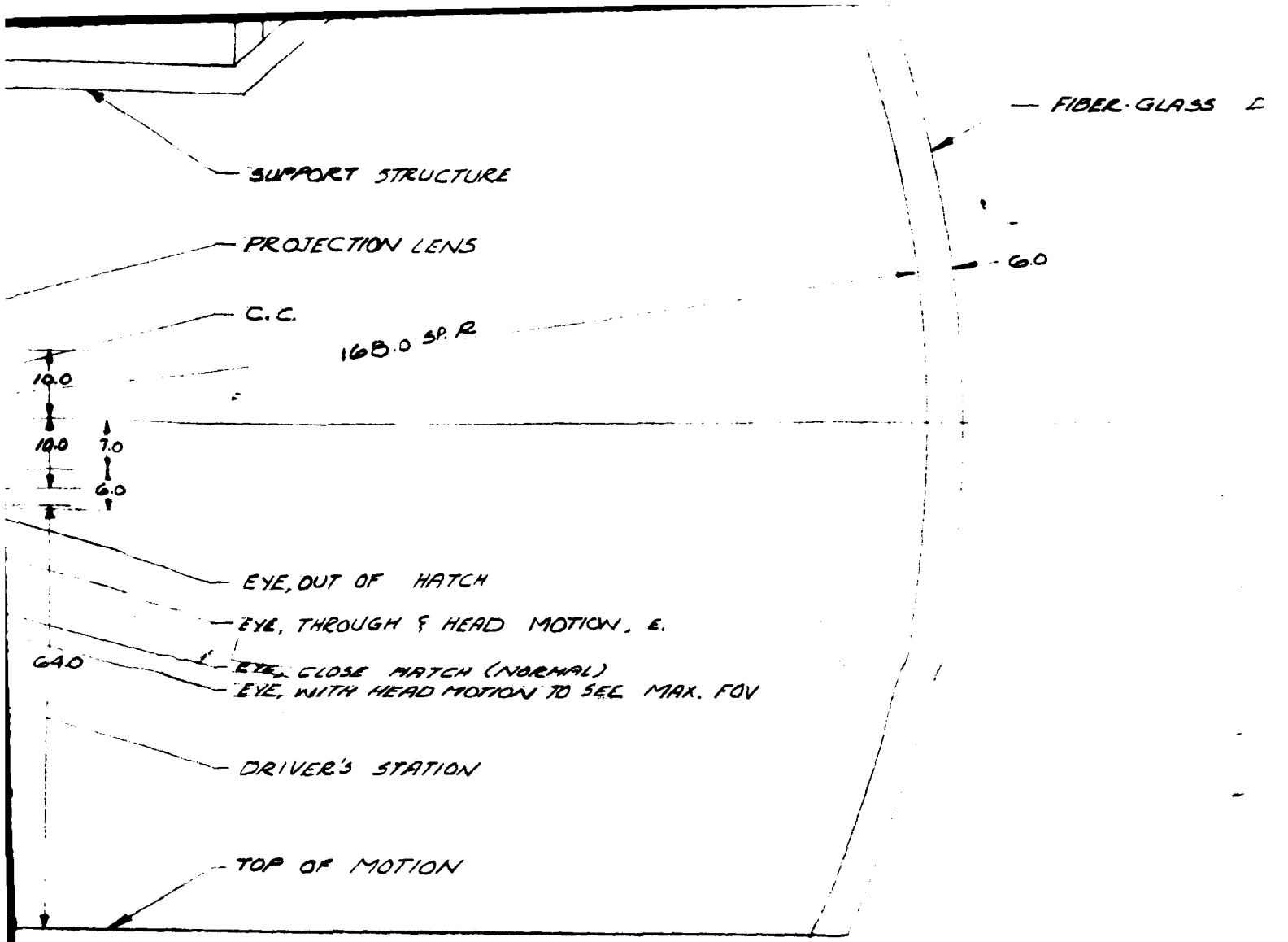

5

7

QTY REQD	CODE IDENT	PART OR IDENTIFYING NO

UNLESS OTHERWISE SPECIFIED DIMENSIONS ARE IN INCHES. TOLERANCES ON DIMENSIONS
2 PLACE ± .03 ANGULAR ±
3 PLACE ± .010 FRACTIONAL ±

MFR TO LINK STD

MATL\FNSH

CONTRACT NO

PREPARED BY Rajni P. Patel

CHECKED

ENGR

APPROVAL

DASH NO. NEXT ASSY USED ON

AD-A091 424 SINGER CO BINGHAMTON NY LINK DIV F/G 19/2
DESIGN DEFINITION STUDY REPORT. FULL CREW INTERACTION SIMULATOR--ETC
JUN 78 N61339-77-C-0185
UNCLASSIFIED LR-895-VOL-3 NAVTRAEQUIPC-77-C-0185-000 NL

1 OF 3

END
DATE
FILMED
12-80
DTIC

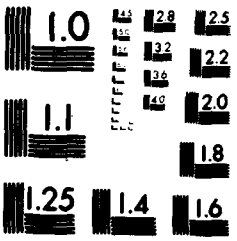

MICROCOPY RESOLUTION TEST CHART
NATIONAL BUREAU OF STANDARDS 1963 A

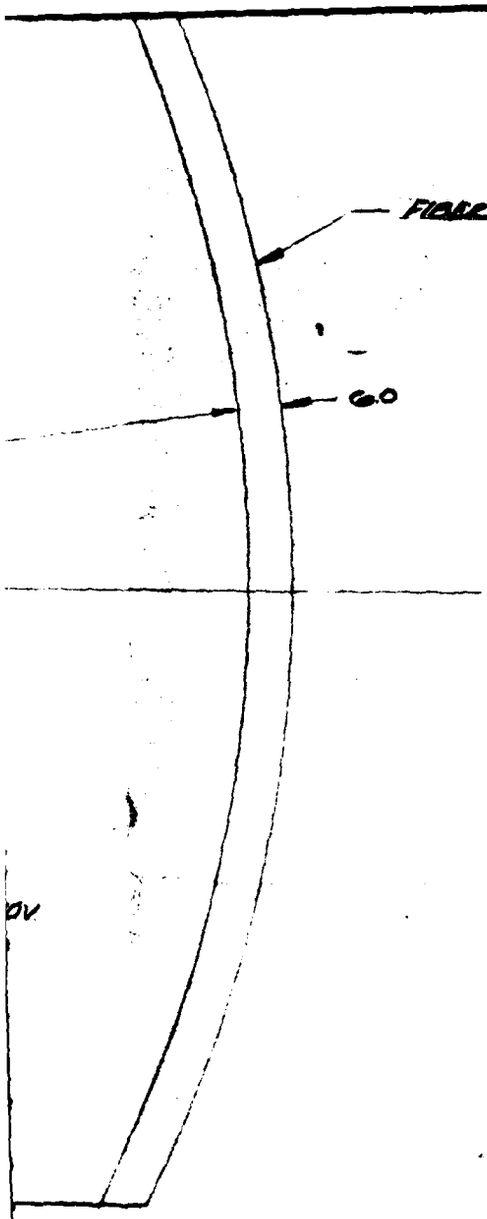

QTY REQD	CODE IDENT	PART OR IDENTIFYING NO.	NOMENCLATURE OR DESCRIPTION	FIND NO.

PARTS LIST

UNLESS OTHERWISE SPECIFIED DIMENSIONS ARE IN INCHES. TOLERANCES ON DIMENSIONS 2 PLACE ± .03 ANGULAR ± 3 PLACE ± .010 FRACTIONAL ±

CONTRACT NO.

PREPARED BY DATE 1-14-71

SINGER
LINK DIVISION
BINGHAMTON, NEW YORK

DISPLAY DRIVERS STATION
14 R FULL DOME
PICTURE 8.38

6

8 7 6

1

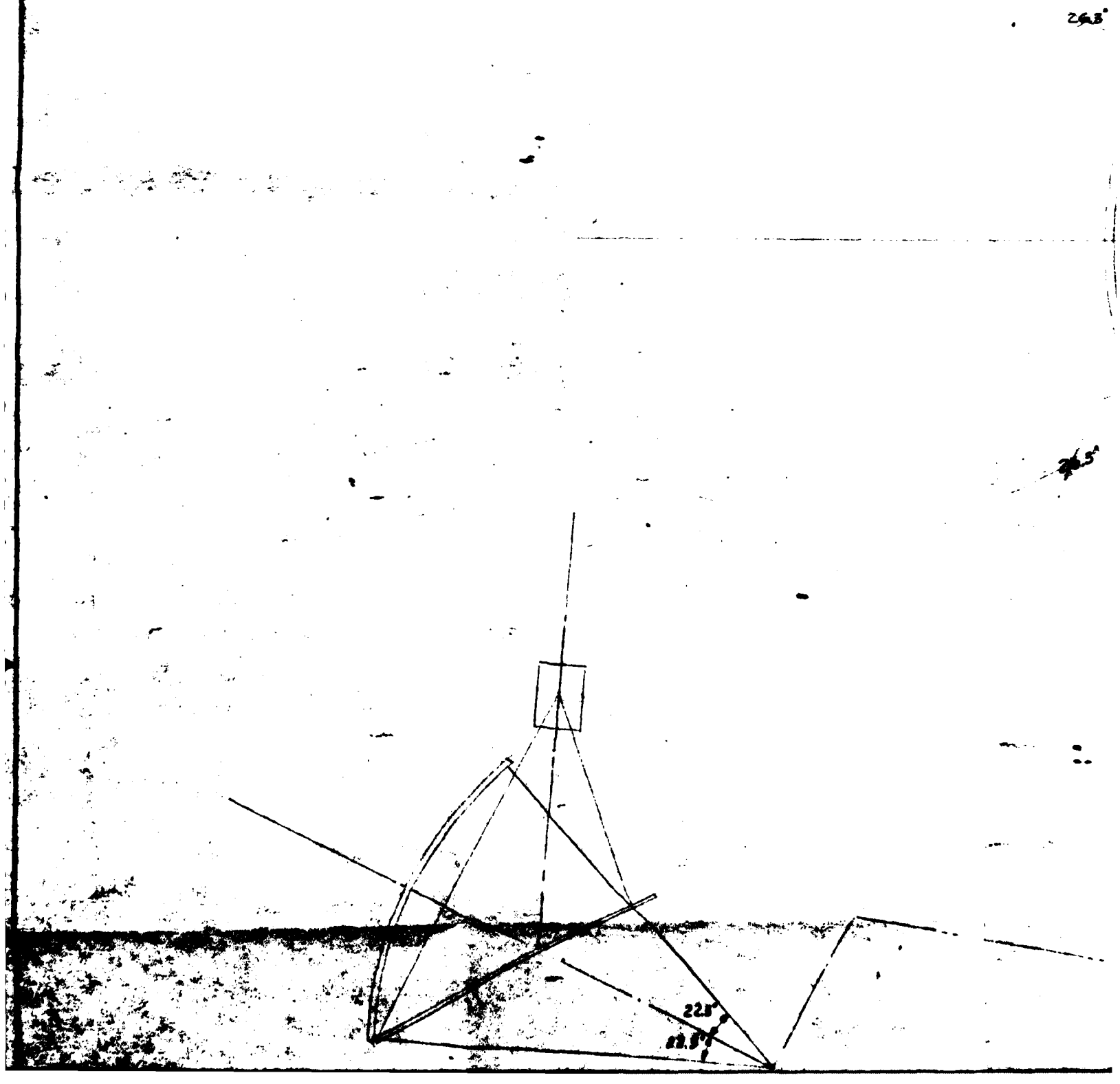

2

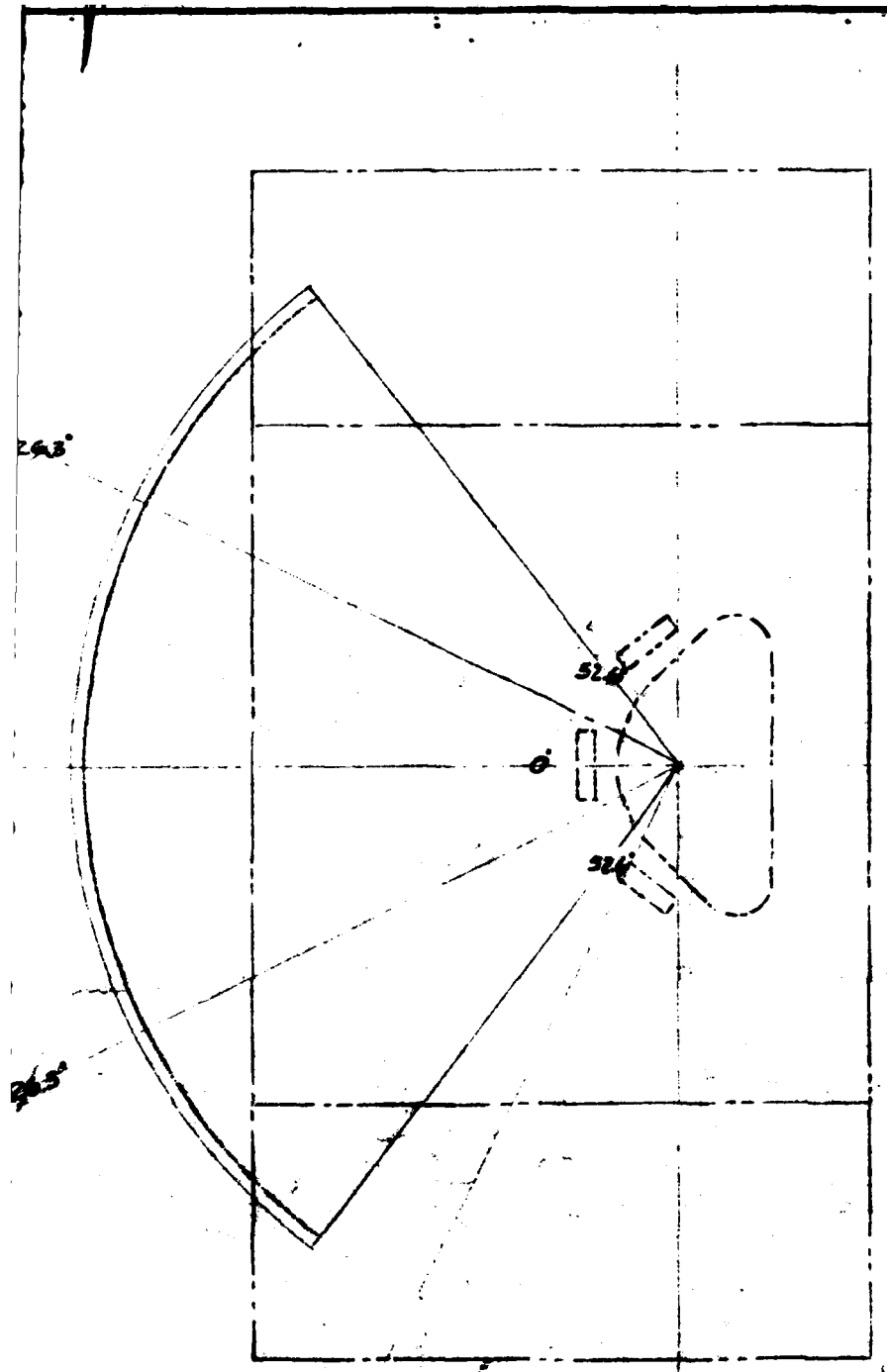

REVISIONS				
ZONE	LTR	DESCRIPTION	DATE	APPROVED
	—	RELEASE		

D

C

B

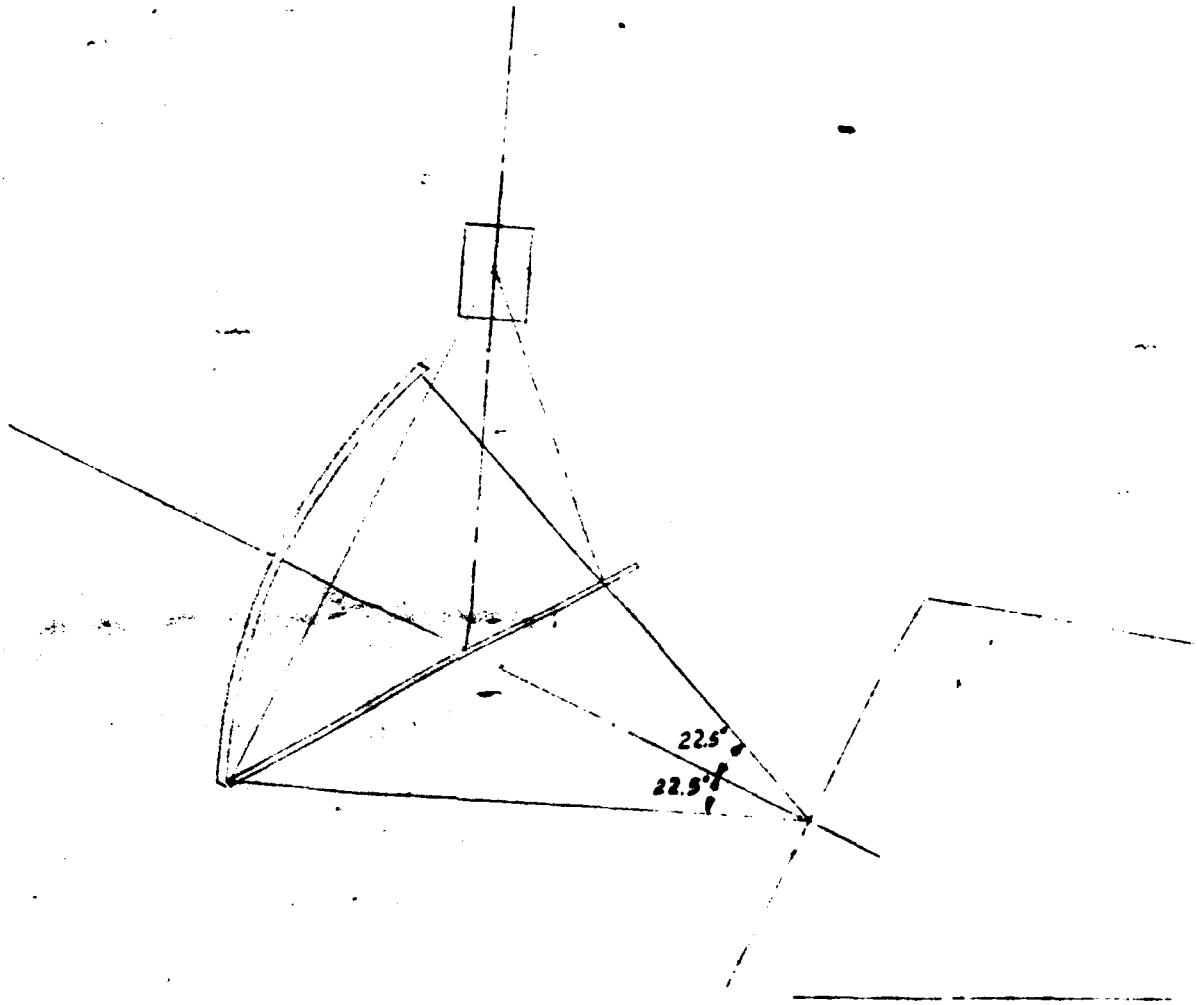
22.5°
22.5°

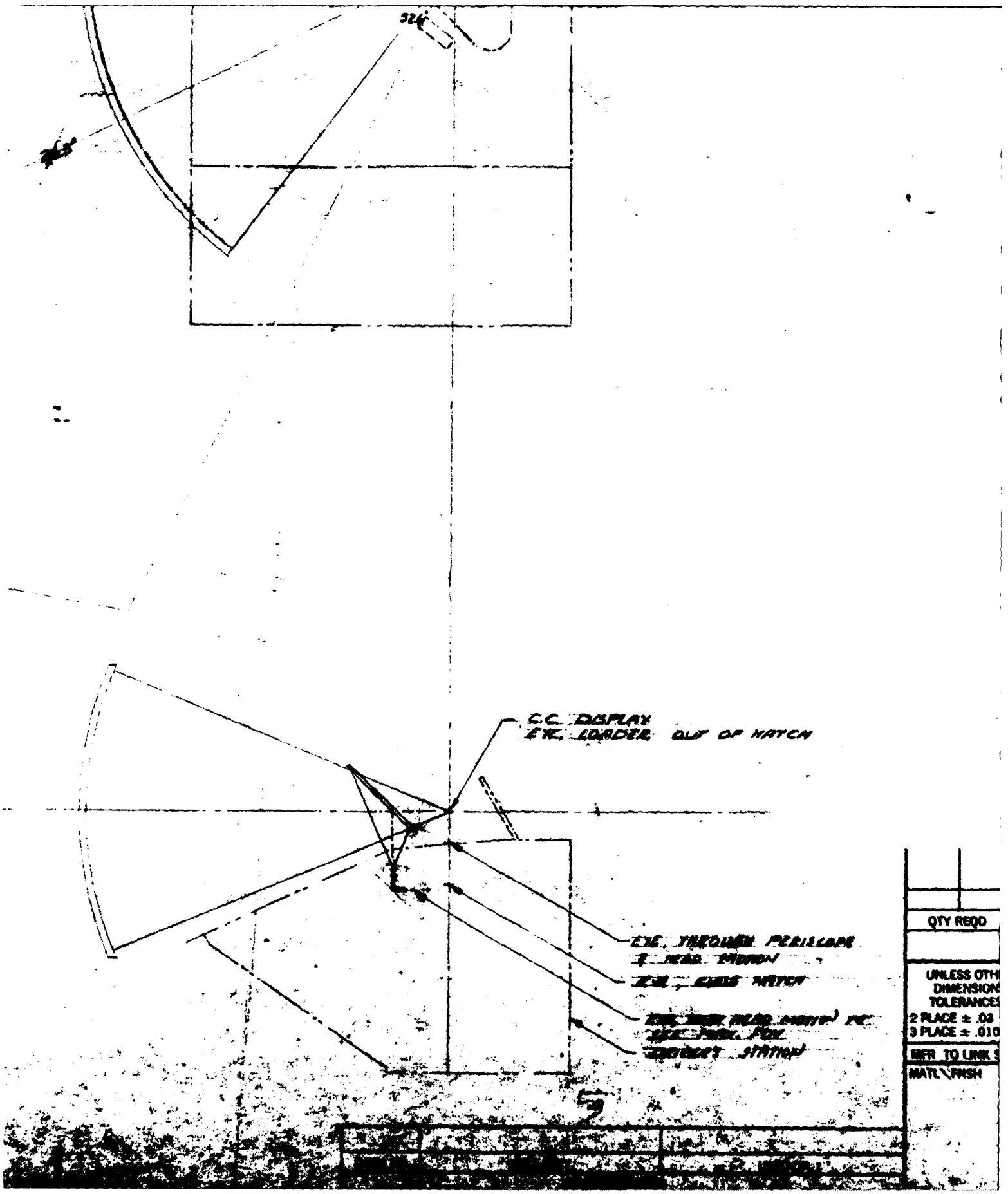
C.C. DISPLAY
EYE, LOADER OUT OF HATCH
EYE, THROUGH PERISCOPE
EYE, GUNS HATCH
QTY REQD
UNLESS OTH
DIMENSION
TOLERANCES
2 PLACE ± .03
3 PLACE ± .010
REF TO LINK S
MATL \ FINISH

C

B

NOTE:
1. OPTICAL LAY OUT IS SAME AS COMMANDER

QTY REQD	CODE IDENT	PART OR IDENTIFYING NO.	NOMENCLATURE OR DESCRIPTION	FIND NO.

PARTS LIST

UNLESS OTHERWISE SPECIFIED
DIMENSIONS ARE IN INCHES
TOLERANCES ON DIMENSIONS
PLACE ± .00 ANGULAR ±
PLACE ± .010 FRACTIONAL ±
MAT. TO LINE STD.
FINISH

6

CONTRACT NO.

PREPARED BY — DATE 1-28-71
CHECKED
ENGR
APPROVAL

SINGER
LINK DIVISION
BINGHAMTON, NEW YORK

EXPANDED WAC WINDOWS
NC15 - DETAIL

THIS PAGE IS BEST QUALITY PRACTICABLE
FROM COPY FURNISHED TO DDC

DOCUMENT NO. 8 — DWG. NO. FLB B-39 — REV.

A

END

DATE
FILMED

12-80

DTIC