AD-A091 285 ARMY SCIENCE BOARD WASHINGTON DC F/G 5/11
ARMY SCIENCE BOARD AD HOC STUDY GROUP REPORT ON HUMAN ISSUES.(U)
MAR 80

UNCLASSIFIED NL

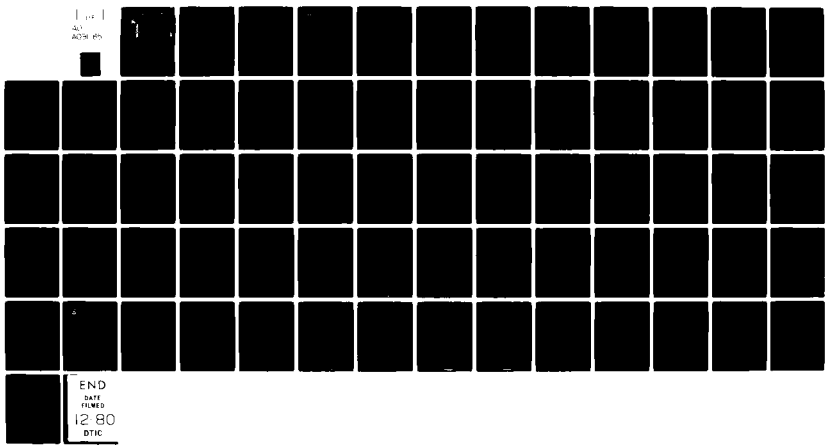

LEVEL III

12

DEPARTMENT OF THE ARMY
ASSISTANT SECRETARY OF THE ARMY
RESEARCH, DEVELOPMENT, AND ACQUISITION
WASHINGTON, D. C. 20310

ARMY SCIENCE BOARD

AD A091285

DTIC
ELECTE
NOV 5 1980
S D
C

AD HOC STUDY GROUP

ON

HUMAN ISSUES

MARCH 1980

DDC FILE COPY

DISTRIBUTION STATEMENT A
Approved for public release;
Distribution Unlimited

80 11 05 057

UNCLASSIFIED

SECURITY CLASSIFICATION OF THIS PAGE (When Data Entered)

REPORT DOCUMENTATION PAGE

READ INSTRUCTIONS BEFORE COMPLETING FORM

1. REPORT NUMBER: NONE

2. GOVT ACCESSION NO.: AD-A091285

3. RECIPIENT'S CATALOG NUMBER:

4. TITLE (and Subtitle): (6) Army Science Board Ad Hoc Study Group Report on Human Issues.

5. TYPE OF REPORT & PERIOD COVERED: (9) Final rept.

6. PERFORMING ORG. REPORT NUMBER:

7. AUTHOR(s): See Reverse

8. CONTRACT OR GRANT NUMBER(s):

9. PERFORMING ORGANIZATION NAME AND ADDRESS:
Army Science Board
Office, Assistant Secretary of the Army
Washington, DC 20310 (RDA)

10. PROGRAM ELEMENT, PROJECT, TASK AREA & WORK UNIT NUMBERS:

11. CONTROLLING OFFICE NAME AND ADDRESS:
Army Science Board
Office, Assistant Secretary of the Army
Washington, DC 20310 (RDA)

12. REPORT DATE: (11) Mar[redacted]80

13. NUMBER OF PAGES: (12) 66

14. MONITORING AGENCY NAME & ADDRESS (if different from Controlling Office):

15. SECURITY CLASS. (of this report): UNCLASSIFIED

15a. DECLASSIFICATION/DOWNGRADING SCHEDULE: N/A

16. DISTRIBUTION STATEMENT (of this Report)

Approved for public release; distribution unlimited

17. DISTRIBUTION STATEMENT (of the abstract entered in Block 20, if different from Report)

N/A

18. SUPPLEMENTARY NOTES

19. KEY WORDS (Continue on reverse side if necessary and identify by block number)

Human Issues Research	Army Science Board
Personnel and Manpower	Human Factors
Personnel Policy Research	Army Personnel Systems Committee
Personnel Maps and Models	Personnel Program Review Committee

20. ABSTRACT (Continue on reverse side if necessary and identify by block number)

The Army Science Board, through three Ad Hoc Sub-Groups, addressed human issues in terms of responsible organizations, research, and personnel systems maps and models. The consolidated report offers recommendations in each area, with a central recommendation that the Army establish a high level permanent group to coordinate and integrate research, modeling, and policy planning. A coordinated human issues program is deemed essential to increase the efficiency, visibility, priority, and attention to human resources (OVER)

DD FORM 1 JAN 73 1473 EDITION OF 1 NOV 65 IS OBSOLETE

UNCLASSIFIED

SECURITY CLASSIFICATION OF THIS PAGE (When Data Entered)

411068

Group 1

Dr. Rhoda Baruch
Dr. Harold E. Cheatham
Mr. Phillip A. Karber
Dr. L. Albert Scipio, II

Group 2

Dr. Arthur J. Alexander
Dr. Kenneth E. Clark
Dr. Donald E. Erwin
Dr. Antoine M. Garibaldi
Mr. Harry J. Goett

Group 3

Dr. Phillip Sidwell
GEN Leonard F. Chapman, Jr. (USMC-Ret)
Mr. Abraham Golub
Dr. James G. Miller
Dr. L. Warren Morrison

Item 20. Abstract (continued)

planning. Other recommendations concern the functions of the Army Personnel Systems Committee, the Personnel Program Review Committee, and a suggested permanent support staff. Additionally, personnel implications of new hardware systems need early recognition, with a conclusion that a formal Personnel Planning Package should be required. A strengthened policy research program and user/researcher determined priorities should be developed. Long-term research commitments are recommended, while retaining a short-term, project capability. Improved force effectiveness and force composition models should result from formation of a center of modeling expertise in the Army.

DEPARTMENT OF THE ARMY
ARMY SCIENCE BOARD
OFFICE OF THE ASSISTANT SECRETARY
WASHINGTON, D.C. 20310

22 SEP 1980

Honorable Percy A. Pierre
Assistant Secretary of the Army
(Research, Development and
Acquisition)
Washington, DC 20310

Dear Dr. Pierre,

In September 1979 you requested that I form three Human Issues Study Groups of the Army Science Board. Group 1 was asked to advise on the various task forces, committees and boards which operate in the personnel area, with specific reference to the Army Personnel Systems Committee (APSC). Group 2 was asked to develop criteria to review Army human issues research, organizations, and procedures to tie research to policy-making needs. Group 3 was asked to advise on the use of personnel systems maps and models in support of the planning and execution of an integrated human research agenda.

Army Science Board members with expertise in the social sciences, operations research, and research and development management served on the groups. The three Human Issues Groups have completed their tasks and the final report, with detailed findings and recommendations, is enclosed.

Because all three groups dealt with Army human issues matters, their reports contain recommendations in common. These recommendations reflect concerns that the Army does not give sufficient visibility, priority, or resources to human issues considerations. The groups recommend that the Army take a more active role in dealing with human issues; human resources planning must be proactive rather than reactive. Each group recommends that a high level, permanent group be established to function as a central integrator of Army human issues activities in such areas as research, studies, analysis, modeling, and planning. The groups advise that a coordinated program in human issues with high level involvement and support is essential to maximize the usefulness and effectiveness of Army human issues committees, research and modeling. A brief summary of the recommendations of the three Human Issues Groups follows.

Human Issues Group 1 recommended that:

1. The Army should establish a permanent support group for the Personnel Program Review Committee (PPRC) and the APSC. This support group should have sufficient status and resources to accomplish its mission as described in the report.

2. The APSC should direct the preparation of an inventory and a cross-cut budget of existing human issues programs, research, studies, and planning groups. This inventory and cross-cut budget would provide an overview of existing activities and should assist the APSC in its oversight functions.

3. A Personnel Planning Package should be included at the time of proposal and at each milestone in new systems development. The Personnel Planning Package should anticipate personnel, training, and other system requirements.

4. The support group should continuously review findings of Army research, studies, and other personnel-related activities in order to assist the PPRC in forecasting human issues needs, identifying gaps and overlaps in human issues programs, and formulating policy alternatives.

Human Issues Group 2 recommended that:

1. The Army should strengthen efforts to develop a properly planned and funded program of policy research on human issues.

2. Policy researchers and users should jointly establish research priorities, directions, and agendas.

3. Long-term research should be supported by long-term commitment to one or more institutions while retaining a place for individual projects of a short-term nature.

4. An office concerned with broad, long-term human issues policy should be established to act as a center for planning and promoting such research.

Human Issues Group 3 recommended that:

1. The Army should establish an organizational element within the staff with authority to integrate and coordinate human issues policy development, research, analysis and modeling. This group should be responsible for assuring the development of appropriate maps as management tools and should direct the activities described in recommendations 2 and 3 below.

2. The Army should develop holistic Force Composition models rather than narrow single purpose models. Human dimensions such as fatigue and cohesiveness must be quantified and included in the Army's hierarchy of Force Effectiveness models.

3. The Army should establish a center of excellence for human issues modeling. This center should be the focal point for modeling the human component of Force Effectiveness and for collecting test data necessary to support modeling activities.

4. The Army should increase its emphasis on the human dimension in total systems development, including not only hardware design, but also doctrine, tactics, and training.

Sincerely,

J. Ernest Wilkins, Jr.
Chairman

Inclosure
As stated

Accession For
NTIS GRA&I
DTIC TAB
Unannounced
Justification
By
Distribution/
Availability Codes
Avail and/or
Dist Special
A

TABLE OF CONTENTS

SECTION I. PREFACE

SECTION II. GROUP 1 - PERSONNEL AND MANPOWER

A. Terms of Reference
B. Background
C. Findings
D. Recommendations
E. Summary

SECTION III. GROUP 2 - POLICY RESEARCH

A. Terms of Reference
B. Background
C. Findings
D. Recommendations

SECTION IV. GROUP 3 - MAPS AND MODELS

A. Terms of Reference
B. Background
C. Findings
D. Recommendations

Appendix A - Briefers of Group 1 and selected Army Groups concerned with Human Issues

Appendix B - Offices & Personnel Met by Members of Group 2

Appendix C - Offices & Personnel Met by Members of Group 3

Appendix D - HQDA ltr 15-79-9, establishment of the APSC and the PPRC

Appendix E - Group 1 Membership

Appendix F - Group 2 Membership

Appendix G - Group 3 Membership

SECTION I
PREFACE

A. Concerns expressed by the Army leadership for crucial problem areas designated at the Key Issues Conference of 1978 as "human issues" were followed by several developments.

1. The Key Issues Conference recommended that a determination be made of the desirability of establishing a personnel version of the Research and Development Acquisition Committee (RDAC) and the Army Systems Acquisition Review Council (ASARC) to focus top level attention on human issues research and to formulate human issues programs to meet future needs. A concept paper was presented to the Army Policy Council (APC) in March 1979, and a number of alternatives for establishment were proposed.

2. Immediately following the Key Issues Conference of 1978, the APC agreed that the Assistant Secretary of the Army for Research, Development and Acquisition ASA(RDA) should appoint a committee to determine whether the Army Science Board (ASB) was a practical and desirable mechanism for reviewing and evaluating Army personnel research and developing human and sociological forecasting. Members of this Human Issues Transition Committee of the ASB interviewed key persons in the Army on human issues of special concern and issued a report in May 1979. They concluded that the ASB has a role to play in the area of human issues in helping the Army plan for its future.

B. Four recommendations of the Human Issues Transition Committee were:

1. Add social scientists to the ASB in order to increase its capability to advise on human issues in the Army.

2. Establish a study group to advise the Army on how to integrate human issues research and establish terms of reference (TOR) for a personnel council.

3. Establish a study group to review and evaluate the quality and breadth of Army human issues research.

4. Task the ASB to advise the Army on the development of maps or models to reflect the interrelationships of the human components in the Army.

C. Subsequently, several social scientists were added to the ASB and three groups formed. A sub-group was charged with primary responsibility for addressing recommendations 2 through 4 above.

SECTION II
GROUP 1 - PERSONNEL AND MANPOWER

A. TERMS OF REFERENCE (TOR)*

1. The Army is presently forming an Army Personnel Advisory Council (APAC) to be composed of members of the Army Secretariat and Army General Staff. The group will function in the personnel arena similar to a group which presently reviews materiel programs.

2. The ASB should advise on the TOR for the new APAC. This advice should include a review of existing and proposed task forces, special committees, and boards working in the personnel area with a view toward consolidating and integrating their activities.

3. Request the ASB provide a report by the end of March 1980 which answers the following questions:

a. What major tasks should be included as part of the APAC TOR? What directives, organizational structure, or procedures would facilitate APAC efficiency?

b. What are the other task forces, special committees, working in the personnel area (in being or proposed), and how can they be organized to provide a more integrated approach to solving personnel related issues?

B. BACKGROUND

1. In October 1979, two personnel committees were established that were to be counterparts of the ASARC and the RDAC: the Army Personnel Systems Committee (APSC) and the Personnel Program Review Committee (PPRC). The mission, functions, and composition of these newly formed committees were included in a letter from the Adjutant General; that document is included as Appendix D.

2. Since the planned APAC was superseded by the APSC and the PPRC, this task was reinterpreted as elaborating on the functions and composition for the APSC and the PPRC.

3. In addressing the tasks in the TOR, the group surveyed a wide range of Army human issues activities, including the various mechanisms, both those currently being implemented and those which might be established, which would serve to coordinate and integrate human issues.

* The TOR were included in a memorandum from the ASA(RDA) to the Chairman, ASB, 28 September 1979.

and integrate human issues.

C. FINDINGS

1. APSC. There is a need for a committe concerned with human issues to function at the level of the Army Secretariat and the Army General Staff. We understand the APSC to be the body responsible for providing guidance to the Army on human issues. As such, it is a directive, decision-making structure charged by the SA with the general functions enumerated below:

- Oversee the development of human issues programs to insure that they meet the needs of the future

- Determine the priority of human issues programs

- Focus on changes or trends in American society and their anticipated impact on Army research and human requirements

- Decide which human areas require study/research and provide direction and set priorities for the proper conduct of research over the near, mid, and long term

- Insure that the DA staff adequately addresses human issues within their spheres of responsibility

- Insure that Army human issues programs receive adequate priority in competition with other Army programs

- Oversee and provide direction to the PPRC

- Review human issues programs developed by the PPRC prior to the PPRC presenting those issues before the Program Budget Committee (PBC)

- Provide advice and consultation to the PPRC or act as a decision-making body depending on the particular issue(s) in question

In order to accomplish its mission, it is essential that the APSC receive appropriate input from the PPRC.

2. PPRC. The general functions of the PPRC as currently mandated by the SA are given below:

- Assist the Assistant Secretary of the Army (Manpower & Reserve Affairs) (ASA(M&RA)) and the Deputy Chief of Staff for Personnel (DCSPER)

- Integrate all human issues (which include personnel and manpower) into a single program

- Recommend human issues research priorities to the APSC

- Oversee human issues research and coordinate with the U.S. Army Research Institute for the Behavioral & Social Sciences (ARI), major commands, and other Services

- Recommend new human issues program priorities to the APSC

- Present the Army's human issues program to the APSC

- Present and defend Army human issues programs before the PBC during the budget review and POM process after consultation with the review by the APSC

- Oversee human issues integration on the Army staff

- Perform an annual cyclical review of human issues programs to coincide with the POM/budget cycle

The PPRC is charged to plan and coordinate all human issues activities and provide input to other groups such as the APSC and the PBC. The tasks for the PPRC as outlined above are unrealistic. The second function, for example, "Integrate all human issues ... into a single program", is impossible given the composition of the PPRC. With these additional functions for already overburdened individuals and organizations, the PPRC can be only reactive, not proactive. What is needed is to establish a permanent support group that has the status and resources to provide the needed input to the PPRC. Such a group must be a permanent body and include a sufficient number of knowledgeable people who have a systems view of personnel problems.

D. RECOMMENDATIONS

1. The APSC should direct the preparation of an inventory of programs and cross-cut budget for existing human issues programs, research, studies, and planning functions. An overview of expenditures and functions from a cross-cut budget used in conjunction with the human issues map developed by ASB Human Issues Group 3 should help consolidate the oversight functions of priority and program development.

2. Anticipation of personnel needs with sufficient lead time and resources for planning is a crucial problem. One step in the right direction was taken when the DCSPER joined the ASARC.

a. A further step would direct that, at the time of proposal for new systems or concepts, a Personnel Planning Package be included (along with budget and logistics plans).

b. The APSC should direct the PPRC to establish guidelines and a schedule for presentation of the Personnel Planning Package appropriate to each milestone in the system development. The U.S. Army Training & Doctrine Command (TRADOC), the Human Engineering Laboratory (HEL), and the Concepts Analysis Agency (CAA) might also collaborate on the development of the guidelines.

c. In the Personnel Planning Package, consideration must be given to more than numbers of personnel. What tasks will humans be required to perform with the proposed new system and under what environmental conditions? What are the implications for recruitment, for selection, for training, for retention, for mobilization? What are the implications for needed research or studies? The introduction of these considerations at an early stage will allow for modifications of the proposed system.

d. The Personnel Planning Package should be presented for approval at each ASARC or other milestone with accompanying recommendations for changes or trade-offs concerning personnel acquisition requirements and tasks performed by mechanized components or electronic "brains" compared to tasks performed by humans.

3. The Army should establish a permanent group to support the PPRC and the APSC. It is essential that the group possess high status and adequate resources. Since the Army intends to give human issues serious consideration in the planning and implementation of the Army mission, this course of action will require making hard choices concerning the allocation of scarce resources. To do other than to give the support group the status and resources it needs, however, is to provide only stop-gap measures for resolving this set of extremely critical Army personnel problems.

a. The support group should:

(1) Review reports of Army task forces, studies, and research pertaining to personnel and digest and integrate their conclusions.

(2) Develop recommendations for review by the PPRC. The PPRC could present these to the APSC with an evaluation of policy options.

(3) Consult regularly with experts within and outside the Army (including the ASB) to obtain aid in forecasting human issues needs and to identify gaps and overlaps in human issues programs.

(4) Complete an annual review of personnel doctrine, policy statements, survey materials, studies, and reports to assure that:

(a) gender-neutral terminology is used;

(b) sensitivity to racial or ethnic identity issues is achieved;

(c) assumptions underlying studies or task forces are explicit; findings and derived policy options are qualified by these assumptions;

(d) criteria used in studies and reports are compared with derived policies. This recommendation involves an ongoing validation process for tests, theoretical models, and other techniques.

(e) progress toward implementation of programs under paragraph a. is monitored. The PPRC should report obstacles encountered to the APSC.

(f) needed modifications of policies or actions are recommended; and

(g) task forces, researchers, and others receive feedback on policies derived from reports and on the consequences of implementing these policies.

b. In addition, the support group should meet and consult with appropriate managers of personnel-related activities, including the Director, Human Dimensions Directorate (TRADOC), and the Commander, U.S. Army Administrative Center to help bring the focus of the PPRC to the human issues of the Army of the Future.

c. The support group should enable the PPRC to establish priorities for dealing with important human issues and advise on how to coordinate and integrate human issues activities.

d. To accomplish the functions outlined above, certain criteria need to be met in forming a support group. These criteria are:

(1) Authority and prestige. The support group must have the power and status to enable it to accomplish its mission.

(2) Competent personnel. The members of the support group must be qualified to carry out the tasks of the group.

(3) Sufficient personnel. Not only must the members of the support group be competent, but there also must be a sufficient number of them to accomplish the mission of the group.

(4) Adequate resources. In addition to the personnel resources already discussed, the support group will need access to any other resources that may be required.

(5) Structure. A means must be provided by which the products of the support group are linked to the process of decision-making by Army managers. The newly formed APSC and PPRC would appear to provide such a mechanism.

(6) Location. The group should be assigned to ODCSPER.

e. The DCSPER has taken steps to provide a support group. As a result of a study done by the Office of the Deputy Under Secretary of the Army (Operations Research), 10 spaces were allocated to provide in-house research/study capability under the ADCSPER. These 10 spaces should be combined with the present three-space study and analysis section, thus providing a 13-space group which could support the PPRC, APSC, and DCSPER. In order for the DCSPER to speak authoritatively at the ASARC, he needs adequate backup information on what the issues and problems are in the area of manpower and personnel. In providing this support, however, the DCSPER might deprive his organization of its long-range planning capability. We believe that the DCSPER should not have to support the PPRC at the cost of losing his long-range planners.

f. It is important that the Army form a permanent group with sufficient status and resources to do the job that needs to be done. The Army must give serious consideration to the establishment of a group headed by a person, either civilian or military, of rank comparable to Brigadier General. Such an action would signal the Army's serious interest in dealing with human issues and insure the success of the working support group.

E. SUMMARY OF FINDINGS AND RECOMMENDATIONS.

The Army is facing serious problems in the area of manpower and personnel. We share the concern expressed at the 1978 Key Issues Conference for the human issues involved. With respect to the TOR, we find and recommend that:

1. A high level (Army Secretariat/Army General Staff) group, such as the APSC, is needed to address human issues.

2. The APSC can accomplish its mission best if it can receive the input it needs from the PPRC.

3. In order to accomplish its functions, the PPRC requires a competent support group.

4. The Army create a permanent support group for the PPRC, giving the group sufficient status and resources to accomplish its mission.

5. A cross-cut budget and an inventory of human issues programs, personnel planning, and research should be prepared to provide an overview to the APSC.

6. In order to anticipate personnel needs and to negotiate system changes and adaptations with sufficient lead time, Personnel Planning Package should be included at each milestone, to include inception, in new systems development. The PPRC should establish the guidelines and associated schedules for these submissions and should be the agency for identifying and alerting operational sectors of the Army.

7. The findings of Army research, studies, and other activities pertaining to personnel should be reviewed and assimilated by the support group in order to forecast human issue needs and to provide the basis for recommendations in the personnel area.

SECTION III
GROUP 2 - POLICY RESEARCH

A. TERMS OF REFERENCE

1. The quality, breadth, and responsiveness of Army human issues research should be reviewed. As a first step, guidelines or criteria for such a review should be developed through consultation with Army management and staff. To set this review in a realistic context, major Army human issues research facilities and other relevant research organizations should be visited for examination of their organization, mission, mode of operation, and research products.

2. Request the ASB provide a report by the end of March 1980 which answers the following questions:

a. By what criteria should Army human issues research organizations be evaluated with respect to quality, breadth, and responsiveness -- now and in the future?

b. What procedures would you recommend to tie research to policy-making needs? Should there be central coordination of Army human issues research? If so, where should this effort be assigned?

c. What procedures could be established to insure that ASB Members provide Army policymakers with the most recent information from the academic and industrial research base?

B. BACKGROUND. Before proceeding, it is expedient to bound the problem: whom do we include in the policymaking community; what is policy research; and what are the human issues we contemplate?

1. The decision and policymaking community include the Army Staff and Secretariat and headquarters of major commands. These are the levels that appear to be poorly served by the research community. Lower levels of the major commands appear to be better tied in with the research community. Operating levels at TRADOC, for example, have established good working relations with the Army Research Institute.

2. Policy research is more than just research. It includes medium- and long-term (six months and longer) investigations that are tied to high-level problems. It starts with a policy problem. These policy problems generally require new information. They can include comprehensive descriptions of complex phenomena. Usually, it is necessary to draw on the stock of existing research results; often, new research will be performed, some of it quite basic. This applied and basic research, unlike traditional academic practice, is stimulated by the policy problem. We purposely avoid defining these activities as research, studies, or analysis. Here we simply call it "policy research". Important characteristics

are the time scale, the client, the problem of orientation and the intellectual effort required. We are not alone in avoiding the definitions implied by budget categories and existing regulations. A memorandum from the Director of Human Resources Development (ODCSPER), as one example, noted that, "As far as personnel policy decisionmakers are concerned, there is little usefulness in drawing fine lines among definitions of studies, research, analysis, or even 'plain staff work'. All such efforts are supposed to be part of a problem solving process aimed at generating, comparing and evaluating policy alternatives."

3. Human issues are centered around people in the Army -- getting, keeping, training, and using them. The focus may be on the people themselves, e.g., motivation, satisfaction, morale, members of teams, or on functions, e.g., training, maintenance, accessions, retention. Human issues can range from drug abuse to quality of life in Europe, to the complex problem of helicopter maintenance that could include helicopter design, training, equipment-labor tradeoffs, and organizational structure. Human issues have not included medical research, management, human engineering, and military operations analysis. All of these areas are served by an established and well-connected research establishment. However, one study has recommended that the simulations and analytical models used by the operations analysis community be better grounded in research from the human issues area, as discussed more fully in Section IV.

C. FINDINGS.

1. Although tasked to develop criteria for research organizations, we found that effective human issues policy research implied criteria for the clients (users) of the research, as well as for the performers. Discussions with research users, planners, and performers in the Army, the other Services, Department of Defense, and elsewhere suggested a list of ideal characteristics of effective policy research and identified serious impediments to effective policy research in the Army. The characteristics of good research, combined with measures to deal with the impediments to attaining them, generated criteria for performers and users. Our reccommendations, based on this analysis, aim at achieving effective reasearch to support policymakers.

2. Impediments to Effective Policy Research.

a. Fragmentation. Large organizations are, of necessity, divided into smaller sub-organizations, which proliferate at lower levels. Although policy problems are usually system-wide, sub-organizations typically address only those parts of the problem they face directly. Policies are therefore usually suboptimal. Although decentralized management is necessary for an organization as large as the Army, planning, policy development, and policy researchh need not be fragmented. A system-wide view can be generated in the research community when many strands of research are tied together. We face the problem of how this process can be encouraged and how it can be tied to a systems view at the policy level.

b. Linkage. It is not enough for a research community to exist, or even for it to be working on problems of concern to the policymakers. Strong and direct links are essential to transmit problems and questions, to convert them into researchable projects, and to transmit the results back to the client as options, alternatives, and evaluations that the policymaker can use. Stating this requirement, is the easier part of the task. Establishing the linkage between researcher and policymaker is the core of the human issues policy research problem for the Army. A management cell, located at HQDA or elsewhere, is unlikely to be the effective middleman that we seek. Such a cell was recommended, for example, by the Army Engineer Studies Center as an Appendix to the DUSA(OR) report. It would be involved with budgeting, coordinating, and managing rather than with information transfer and transformation. A management cell, however, could usefully fulfill those functions for which it was originally suggested. Ordinary researchers are unlikely to be the type of person to provide linkage. Reluctant researchers, borrowed from their studies, generally do not have sufficient interest to make the linkage between research and policy. A special type of researcher is required -- one who understands both the research and the policy worlds. These people should be placed in both the research and policy communities. Not only do they need each other to talk to, but they are also able to speak to their colleagues in a language that is understood by their listeners. This implies a requirement for people who are receptive to the analytic approach and to the potential contributions of research.

c. Responsiveness. Insufficient responsiveness has been the major complaint against the Army's research community. It should be understood at the outset that responsiveness is more than the ability to give a quick turnaround to specific questions. It is a process that extends over time. Each occasion for asking a question should not be considered as a separate, isolated incident. A two-week answer may require two years of research. A long-term research program must be planned with some foresight so as to be more responsive to short-term questions.

3. Ideal Characteristics of Policy Research Process. In order to address our assigned task of developing criteria for research organizations, we first had to come to an appreciation of what constituted effective policy research. We quickly found that we could not look at the research side of the process as isolated from either the user or the method of transferring and transforming research results into useful products. Accordingly, we solicited the views of our interviewees on the elements of good policy research. From these views, we abstracted a set of ideal cahracteristics.

a. Important. Policy research should be concerned with important issues to policymakers.

b. Cross-cutting. The subjects chosen for analysis should cross-cut lower level organizational boundaries. In this way, the researchers can attain a more system-wide view, and be of greater benefit to their clients, than if they were confined to the narrow outlook of an operating agency. Since the research is likely to be useful to a number of organizations, it should not be arbitrarily constrained by bureaucratic boundaries.

c. Understands environment. Policy researchers should understand the decision environment, including the bureaucratic context. Research in the absence of environmental knowledge is likely to be sterile and unsuitable to policymaking needs. On the other hand, researchers should not accept all existing conditions without challenging their necessity, usefulness, and seemingly unchanging nature. This requires a fine balance between understanding and respect, and a critical, questioning attitude.

d. Confidence and trust. Mutual confidence and trust is required to ask the questions, provide the data, and listen to the results. The policy people must have confidence in the technical ability of the researchers and in their understanding of the problem context. The client must be able to confide in the researcher and to provide sensitive data. The researchers, in turn, should see their clients as people who value their efforts. The linkage between the two is unlikely to be fruitful without this mutual confidence and trust.

e. Accountable. The researchers must be accountable for their products and their results. The research should be available to others backed by scientifically sound procedures and intellectual integrity. This should not only lead to more robust results, but also reduce the organizational biases of the research and avoid the probability of being captured (or seeming to be captured) by an individual or agency. The willingness to engage in scientific debate reduces the arbitrariness of recommendations.

f. Tolerance for unpleasant answers. The client must be tolerant of unpleasant (wrong) results. Almost any body of research will generate conclusions suggesting that present policies are imperfect. Almost all policy problems are complex, not admitting of simple answers. Therefore, almost all properly performed policy research will at times come up with results that conflict with policy. Similarly, research will not always yield unambiguous or simple answers. The probability of "wrong", ambiguous, and complicated results must be recognized and accepted by clients.

4. Criteria for Policy Research Performers. In developing criteria for evaluating Army human issues research organizations, we wanted to avoid producing a list that would be used in a routine, mechanical way to judge whether a particular organization did or did not meet a test of adequacy. Rather, we thought of the criteria as a planning tool to help structure a research organization to meet the ideal requirements set out above.

a. Problem oriented. Key staff people should look to the problems rather than to academic disciplines for their research focus. These are the "gatekeepers" or links mentioned earlier. These people should stand astride the flow of reserach and problems, with a foot on both sides. (the recent institution of "program coordinators" as the ARI is a good example of an attempt to achieve this capability.) Scientific skills are also necessary, of course. But the scientific and academic disciplines will usually be brought in at a later stage. Most of the research, in fact, will be performed by staff with narrower, technical qualifications; but without the problem oriented people, the research is likely to be unused.

b. Continuity. Long-term research plans and funding are necessary to develop a capable staff, mutual confidence and trust, understanding of the decision environment, understanding of the problem, and the ability to be responsive to short-term questions. Continuity is therefore the key to attaining many of the attributes necessary for effective policy-research. Continuity however, can have negative effects if it leads to inflexibility, unresponsiveness, and loss of innovation. Appropriate program strategies can perhaps avoid the worst of the negative effects while preserving the benefits of continuity. (This will be discussed further in the recommendations.)

c. Multi-disciplinary. Problems are broad. The research staff should be also. The disciplinary mix should include economists, psychologists, statisticians, engineers, sociologists, and others, depending on the types of problems addressed. In policy research organizations, many researchers who began their careers as well-trained, technically specialized scientists often develop broader interests and capabilities. These individuals can help make a multi-disciplinary approach be effective.

d. High quality researchers. The problems are important, complex, and difficult. The researchers must be capable of dealing with them. Without good people, policy research is likely to be superficial and not very useful. The research organization and its sponsors should avoid the temptation to substitute numbers for quality. There is a tendency in the military Services to seek to strengthen the system's structure, function, or people. If the system lacks some crucial capabilities, additional resources alone will not fill the void.

e. Access to policymakers. The questions and problems come from the top. The results return there. This can only happen effectively through people, directly. Once again the issue of linkages arises, but in a somewhat different form. Policymakers can describe the problems they face with the nuances and subtleties that would be lost if transmitted by third-parties and written documents. For the researchers, direct discussions with important people can be highly motivating. The assurance that one is working on real problems for concerned and interested clients wires the laboratory to reality. Additionally, it is useful to the client to know who the researchers are, to be able to evaluate them directly and place their trust mentioned earlier. Of course, we do not expect or encourage high level people to be research managers. Management is appropriately left to others. But research leaders should make it a point of seeking out the people with the problems, especially at project initiation and in the presentation of results.

f. Researchers, not decisionmakers. Research staff should not confuse their roles with that of decisionmakers and carry on extensive campaigns for their analytically derived policies. The world is often more complicated than that seen by the researchers. On the other hand, research results should not just be deposited in a library or left with the U.S. Post Office for transmittal. It is the responsibility of the research community to disseminate conclusions and recommendations in a useful form; but it is not their responsibility, as researchers, to carry on holy wars in support of their own policies. When they do that, they cease to be researchers.

5. Criteria for Policy Research Users and Clients. We suspect that the character of the policy research user is at least as important as that of the research performer. The demand, budgets, control mechanisms, and uses of policy research lie in the hands of the clients. We are encouraged by the growing recognition of this in our interviews and discussions with people throughout the Army. Indeed, this recognition was the motivation for the establishment of this committee. Many of the criteria for users that we list below have already been alluded to above; here we will state them from the point of view of the policymakers.

a. Demand for research. Without a demand, there will be no policy research tied to the policymaker. More important than management cells, or groups of experts, or coordinating committees is a demand for policy research that comes from the top level.

b. Means for effecting demand. Without mechanisms for generating research, it will be done only by accident, and then not directly for the client. Implementation of this committee's recommendations should center on appropriate mechanisms that will make any improvements self-sustaining. Such mechanisms ought to be centered around a system of incentives generated by any of a number of means: command authority, budgets, plans, lines of credit, contracts, chits, or other devices. At this point, we shall only note that mechanisms to tie policy to research that do not involve incentives are likely to be unproductive.

c. Long-term view. Problems are long-term, policy staffs change, and results are broad. Without concious continuity and a broad, long-term view, nothing will get done for anyone.

d. Project initiation. Nobody knows the problems like the people at the top, and nobody knows the research field like the researcher. Effective project initiation will usually involve both parties, with the researcher responsible for most of the details and for extensions of earlier work.

e. Active involvement. Policymakers must be actively involved, if only at project beginning and end, in the research process. The principals themselves should participate, if only briefly. Direct communications between the policymakers and the researchers are necessary to provide a clear sense of the issues, to indicate priorities, and to enable the policymaker to understand the research context of the conclusions. Intermediate levels can manage the effort on a day-to-day basis.

D. RECOMMENDATIONS.

1. The Army should continue to strengthen its efforts in developing a program of policy research on human issues. Such programs do not arise spontaneously. There must be decisions, plans, and budgets. If performed within existing Army organizations -- the ARI or CAA, for example -- they will have to change to accommodate to the new requirements. Since any single performing

organization is unlikely to possess the talents and strengths required for the research program as a whole, a variety of organizations inside and outside the Army are potential sources of research on specific subject areas. Several sources will also enhance the competitive aspects of research management. Because traditional university structures, however, are oriented to academic disciplines rather than cross-disciplinary policy areas, Army needs are unlikely to be met by research funded through traditional academic channels.

2. Joint determination, by user and performer, is required to establish research priorities, directions and agendas. The closer an effort is to basic research, the harder it is to rely on any guide other than the judgements of researchers with good reputations. Army officials, on the other hand, are not usually inclined to substitute the judgement of others for their own, especially when the research is on their own problems. A procedure that allows for joint determination is therefore required. Arrangements for peer review and user community evaluation may also be desirable.

3. Institutional support on a continuing basis is desirable, but this must be coupled with flexibility.

a. Problems do not stand still, nor does understanding of the problems. Standard procurement practices are often inadequate for managing this kind of research, which requires simultaneously long-term commitment and short-term change. Complex, lengthy, and cumbersome contractual procedures for funding research have been cited by several sources as administrative impediments to initiating new work. Contractual procedures should be reviewed and modified to reduce this problem. But there are other problems in developing long-term relationships. If research is performed by outside contractors, the breadth and imprecision of task definition may make it difficult to arrange a competitive procurement. These problems are exacerbated by the desirability of providing institutional support on a continuing basis, which is always looked at suspiciously by any contracting office doing its job. If this work is performed inside the Army, many of the same problems exist, not with contractor officers but with research administrators.

b. Some of these problems can be avoided by shorter-term project funding, which has other advantages as well. Contracts can be awarded to the best researchers in particular subjects. A research program can start quickly because no institutional development is necessary. Projects are self-terminating, permitting the Army to withdraw support from poor performers. On the other hand, project funding has a number of disadvantages: there is little motivation to build an integrated staff; continuity is difficult to

achieve; administrative burdens are greater.

c. Despite the potential problems, we recommend support for long-term research in the form of long-term commitments to one or more institutions. All the advantages of continuity can best be reached in this way. Still, there is a place for individual projects: to take advantage of specialized expertise outside the major performers, or to test the capabilities of untried organizations.

4. Ideally, an office concerned with broad, long-term human issues policy and planning should act as a center for planning and promoting such research.

a. Incentives facing operational staffs make it difficult for them to devote significant effort and resources in support of research. Their efforts are too heavily weighted toward shorter-term, more operational activities. We are reluctant to suggest changes in Army organization since we have little institutional or historical background to guide us. Nevertheless, in our review of past and present proposals, and in our discussions with Army Staff, one particular organizational change was very intriguing. A new office concerned with long-term human issues planning would seem to be an ideal center for promoting Army use of policy research on human issues. Not only are there arguments for establishing such an office for its primary planning role, but such an office could act as an in-house advocate for a sustained program of policy research and as a center for promoting Army use of such research. Its focus on the longer term would allow it to make best use of behavioral science results.

b. A number of important issues would have to be addressed in creating an office. The first of these is its location. The obvious first thought is to make it a Planning Directorate in the ODCSPER. As we understand it, at present there is no formal planning structure there (or anywhere else at HQ DA, for that matter) for looking ahead in matters of broad personnel and human issues policy. It is clear that a policy planning agency an echelon lower than HQ DA would be inappropriate, for the problems are Army-wide. However, there may be a rationale for making such a planning group an independent element of the Army Staff, outside the DCSPER office. This would make sense if the issues were so broad and so central that placing them in DCSPER would artificially and arbitrarily limit them. We cannot decide that question here, but we do recommend that if a human issues planning agency is placed in a staff office such as DCSPER, efforts should be made to draw in the other staff elements as policy research clients and users.

c. Other issues pertaining to such an agency include:

whether the office should be assigned responsibility for monitoring human issues research in other Army offices; whether the office should seek to serve as a funding conduit for other offices' human issues research. We have no strong recommendations on these issues, but tend to think that this office should have both a monitoring and funding role (perhaps confined to review and approval) for all Staff sponsored human issues research.

d. If such a planning agency were not feasible, other techniques for linking research to policy may be tried. (In fact, establishment of a policy planning office would not rule out these other techniques.) A device that has worked for the Rand Corporation and the Air Force has been the establishment of a "board of trustees" -- the Air Force Advisory Group (AFAG). Consisting of the Deputy Chief of Staff, Research, Development and Acquisition as chairman, and the Assistant Deputy Chiefs of other Staff offices, the AFAG provides broad supervisory and policy guidance on the Rand research program. By reviewing the research on a regular basis several times a year, it can provide information on Air Force interests, needs, and priorities, while simultaneously being informed of projects and research results. Research proposals from Rand staff and from throughout the Air Force are channeled through an AFAG executive agent who reviews and evaluates the requests for priority and duplication with other work, and assigns requests to AFAG principals who then act as monitors of the approved research. Although Rand's Air Force project budget is appropriated by Congress, each individual research effort must be sponsored (usually on a multi-year basis) by an Air Force Staff agency. This assures a motivation on the part of research program area managers to pay attention to the needs of their potential clients. Frequent and informal contacts (formally encouraged by Air Force regulation), together with the regular meetings of the AFAG, generate a richness of communications that encourages the linkage between research and policy.

e. Moves in this direction have already been taken by the Army with respect to the ARI. We recommend continuation and strengthening of these activities.

SECTION IV
GROUP 3 - MAPS AND MODELS

A. TERMS OF REFERENCE

1. Models, maps, or system diagrams are useful in identifying preliminary system requirements, describing present operations, and in forecasting future trends. Personnel system maps or models which would show the interrelationships between various human components in the Army would be useful for planning relevant research and analyses. These maps or models could aid in reviewing existing research, in identifying present and forecasted trends, in planning the future research agenda, and in developing the analytical capabilities and resources needed should forecast phenomena occur.

2. Request the ASB provide a report by the end of March 1980 which answers the following questions:

a. What kinds of personnel system maps or models could best support the planning and execution of an integrated human research agenda in the Army?

b. Which agencies could benefit most from using these maps or models?

B. BACKGROUND

1. One element of the Human Issues Transition Committee report highlighted the need for developing maps that describe how human resources are integrated with current equipment resources and with the next generation of weapons coming into the inventory in the 1980's. Further, the committee found a pressing need for the development and utilization of human issues relevant models to aid and direct policy formulation, analyses and decision-making at the highest levels of the Army. The report in part read, "The ASB should be tasked to advise the Army on the development of a variety of maps or models to reflect the inner relationships of the human components in the Army. These maps and models would aid in the review of existing research and in understanding of trends and forecasting of phenonema by allowing thorough integrated assessments of the potential impact of forecast phenonema."

2. There is, thus, a growing recognition that a holistic approach must be taken if the Army is to compete successfully in the manpower market place and maintain a high level of combat readiness that can be translated into successful combat effectiveness.

3. Human Issues Group 3 found that the top management levels of the Army (Secretariat & DA Staff) are concerned with deeper understanding and exploration of the human dimension and human issues in our fighting forces. For example, at the most recent Army Operations Research Symposium, the Chief of Staff of the Army in discussing need for balance of effort stated that, "Personnel, the Army's number one problem, only receives 4% of the total level of analytical effort." Also, in the Secretary of the Army's and Chief of Staff's recent joint posture statement they stated that, "Force readiness does not itself determine battlefield effectiveness. Other qualities have traditionally characterized Americans at war, and such qualities will clearly influence our success in the future. They include the leadership of our field commanders and the morale and ingenuity of our soldiers..."

4. Definition of terms. The following defines how the terms "maps," "models," and "human issues" are used in this report.

a. A "map" is essentially a flow chart, a graphic display, of how a system moves toward its goal and how its component parts fit together. In many respects it is a schematic, a "wiring diagram", of how people, equipment, time, place, and doctrine are put together to achieve an objective. It is however, a static entity--it is not interactive on a real time basis--it describes an anticipated reality at a particular moment in time.

b. Another view of such maps are that they constitute a major structural description that shows where and how materiel and people merge to create an armed force. Such maps should include specific elements responsible for human issues. They should also include details of interactions that relate human issues to materiel systems, doctrine and training.

c. A "model" is a representation of the functioning of a system. It is made up of descriptors or simulators of reality. These descriptors are rooted in a data base accumulated from actual experience or based upon theoretical constructs. A model can deal with all, some or one of the factors comprising it and its interactions with other phenonema. It can be interactive and can be time-phased to evaluate results over time rather than merely in a static condition as with maps. The value of models as analyzers of facts, evaluators of alternatives, predictors of future events and aids in decision-making is well-known. Models permit us to ask, "What if" questions to answer the "So what" probabilities that must be dealt with by decision-making groups and policy formulators.

Thus, a "model" is a description of the dynamics of the relationships portrayed in human issues maps.

d. The term "human issue" is used to describe internal or external events, sets of characteristics, sociological, or environmental conditions that effect the psychological and/or physiological functioning of the force. Such issues need to be viewed from the standpoint of their impacts upon both the peacetime operation and wartime combat effectiveness of the total Army force structure.

e. The study group adopted and emphasized the "whole person" view of these issues rather than a narrower "man-machine interface" approach that deals primarily with the human being's capability to perform certain operational tasks with particular weapons systems. Table 1 is a composite listing of human issues and concerns. It was put together from a number of source documents. It represents a list of human issues of concern to the Army Secretariat, Staff, and research community.

5. Approach.

a. In depth conferences were held with the organizations and individuals listed in Appendix A. We believe these cover many of the major current users or potential users of maps and models within the Army.

b. We believed it important to cross reference what the Navy and Air Force had done, were now doing and anticipate doing in the future, in modeling and map applications. State-of-the-art applications were discussed with these two Services in addition to the Army.

c. In order to find out who was working on matters falling within the human issues spectrum, it was necessary to construct a human issues map. The diversity of organizations involved in such investigations and the array of topics engaged was startling.

d. We did not investigate the use of modeling and mapping in other governmental agencies such as the Department of Labor. Further, we did not pursue the use of modeling and mapping in industrial applications and in the academic community. These constraints were necessary because of limitations of time to complete our assignment and the belief that such investigations could subsequently be carried out as necessitated by Army requirements. The following sub-systems currently operating within the Army were taken into consideration in our discussions. The list is representative and not meant to be inclusive. We considered the use of maps and the relevance of modeling to: recruiting; selection; MOS designation; school assignments for advanced individual training; initial assignment to units; retention; rotation; pay and benefits; housing; medical care; recreation; tour length; team turbulence; cohesiveness; leadership and esprit de corps; training; force

TABLE 1

HUMAN ISSUES

Cohesion/Leadership

- Committment to MOS and the Army
- Integration in First Unit Assignment
- Job vs Professional Orientation
- Nobody Cares Syndrome
- Morale
- Unionization
- Turbulence
- Unit Transplacement

Quality of Life

- Health Care
- Overseas Tour Length
- Changes in Reward/Compensation/Incentives
- Job Satisfaction
- Drug and Alcohol Abuse
- Dependents Overseas
- Increased Social Service Role

Training

- Training in Units
  - Management
  - Effective Materials
- Training Systems Design
- Basic Skills Education
- Training in Reserve Units

Man Requirements for Modernization

- Man Machine Interface
- Affordability
- Confidence in Equipment

Mobilization

- Reserve Affairs
- Changes in Training Base
- Human Issues in Deployment

Manning the Force

- Recruiting Strategy
- Minority Composition
- Women in the Army
- First Term Attrition
- Coping with Societal Changes

Man in Combat

- Combat Fatigue
- Revolutionary Communication Systems
- Information Overload

strength; deployment requirements; Active, Reserve and National Guard components; doctrine; weapons systems.

C. FINDINGS. In order to assess the Army's needs for mapping and modeling of human issues, the study group felt that it needed a better understanding of the Army manpower, personnel, and training system. We wanted to know which Army agencies dealt with human issues on policy, research, and operational levels. As an aid to doing this, an Army Human Issues Map was developed (Figure 1). The map shows the agencies within the Army Secretariat, DA Staff, and major commands that deal with human issues. The map served two purposes: it allowed us to explore the interrelationships within and between the various Army elements; it provided us a systematic approach to selecting groups with whom we wished to speak. At its highest levels, Army management expresses great interest in and concern for the importance of human issues for both manning and developing an effective fighting force. The Human Issues Map shows that high level policy statements are interpreted and acted upon by a large number of subordinate organizations. In our detailed discussions we tried to obtain a better understanding of the relationship and responsibilities shown in the map.

1. Policy and Operational Fragmentation.

a. We found that policy and operational responsibilities were fragmented and confused. There appears to be no integration of policy, weapons systems, manpower planning, doctrine, training and operational requirements. Major disconnects result between policy, research forecasting and implementation of manpower planning, training and new weapons systems. A holistic view is lacking and parochial frames of reference remain strong within the top level elements of the DA Staff. An integrated approach, to the extent that it is being done at all, is being performed by the analytical communities within the Army and the civilian organizations who do contract research.

b. There did not seem to be a clear picture of where various agencies' responsibilities began or ended or how they were related to one another. "Turf" prerogatives of the DA Staff impede and deter integration of human issues matters into a coordinated approach toward optimizing combat readiness and effectiveness for wartime while maintaining a ready, competent Army with high morale in peacetime. What interactions we saw between organizational elements were mostly informal.

ARMY HUMAN ISSUES MAP

FIGURE 1.

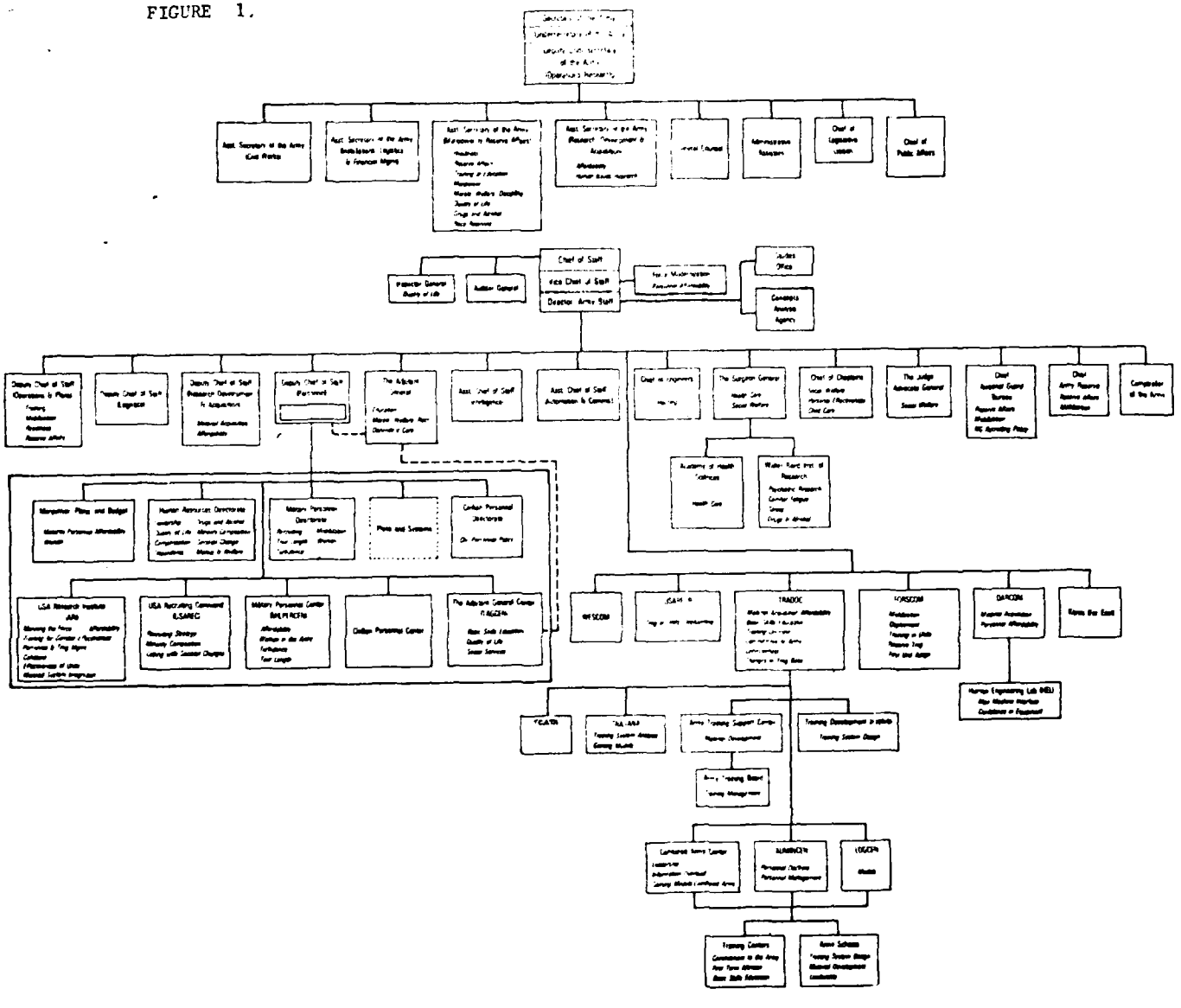

c. There seems to be no formal requirements for uniform guidance on integrating approaches to human issues. An example of this lack of integration is the Army's current approach to personnel affordability. This term refers to the ability of the Army to man the new weapons systems that will be coming into the inventory over the next few years. Personnel affordability is a complex issue with which many elements of the Army are vitally concerned. Figure 1 shows personnel affordability to be listed as a concern of eight organizations. None of these organizations has the clear responsibility or authority to assign objectives and task the other agencies involved. What has resulted is scattered activity that is aimed at the organizations meeting their parochial needs rather than their working together to create a coordinated approach to solving the problem.

d. The Army policy of short duty tours has resulted in too great an emphasis on short term solutions and duplication of effort that result from lack of institutional memory. This problem is particularly evident in the personnel area since officers have not perceived these assignments to be career enhancing. The Administration Center at Fort Benjamin Harrison has been tasked on several occasions to be the Army's personnel doctrine center, but it has never been able to establish sole claim to that job, due in part to lack of staff and resources.

e. Institutional memory is constantly and repeatedly lost throughout all levels of Army management and command. This "know-how" in both human and technological areas is lost through transfer and retirement at all levels. Therefore, the civilian top-level counterparts who stay in place must provide the long-term continuity and provide the longitudinal perspective and point of view. Credibility, consequently, can become a problem because career officers may feel that civilians do not really know what is best for the Army. The upshot of all this is a constant relearning, at an introductory level, of what is already known without maintaining a cadre of highly knowledgeable leaders. Maps that portray system functioning could serve as excellent aids to maintaining and transmitting organizational information.

f. Attempts are being made to begin to integrate the Army's approach to human issues. Two high-level committees have recently been formed to bring human issues some of the attention that hardware systems have traditionally received. The APSC and the PPRC are intended to evaluate human concerns. The DCSPER has proposed formation of a policy analysis group of ten to thirteen people that should serve as an integrating force. The nature and responsibilities of this organization are still unclear. Such an organization could serve as an effective link between policy makers, researchers and implementors. There is a pressing need to put together force requirements, recruitment, selection, training effectiveness, assignment, promotion, rotation, retention, pay and benefits and the other key human issues if we are to field an effective all volunteer force in the 1980s.

g. Even with a commitment at the top management level of the Army, policy compliance and follow-through is difficult to maintain as a program or project or approach is delegated down the chain of command. There needs to be a monitoring system to assure that human issues policies and decisions are, in fact, achieved and maintained on an ongoing basis, not as a result of an ad hoc occasional thrust that loses momentum over time.

h. Human issues have not been marketed well within the Army nor by the Army with Congress. The Army needs to show how improvement in human issue arenas will better insure peacetime readiness and combat effectiveness, reduce operational costs and provide the forces in the right numbers, in the right mix, at the right time, and in the right place as required by the threat.

2. Maps and Systems Diagrams.

a. We defined "maps" as graphic displays of the relationships between system components. They can help to show where and how human issues fit into the R&D, force structure, combat developments, doctrine, and training aspects of a total system. They can serve as tools for supporting the management of Army elements which have either been assigned specific responsibilities for human issues or who have a legitimate interest in such issues. Maps can also aid in the assignment of responsibilities. They can help to maintain communications between organizational elements and provide a means for reviewing and monitoring performance of assigned missions.

b. In our discussions we tried to learn about the use of maps and systems diagrams as management or research tools. While few users would actually say they had developed a system map, we found a number of flow charts that could qualify. Figure 2, for example, is a diagram of the personnel requirements system. It lays out the major components of the system and shows to a degree how they interact. We will refer to this map again in paragraph 4. when we discuss current Army modeling efforts. The research community has used system mapping to some degree. ARI has mapped their research programs to statements of Army needs. ARI uses maps to show system interactions. Figure 3 is a map of Army personnel system functioning with respect to new weapons system acquisition.

c. While we have seen some attempts to map the place of human issues in the development and deployment of systems, the use of mapping as a management tool is not widespread. Maps which show the relationships of materiel systems to relevant force structures, doctrine, and training aspects of a total system do not exist. There do not seem to be maps available that display how soldier and system can be joined to make an effective system.

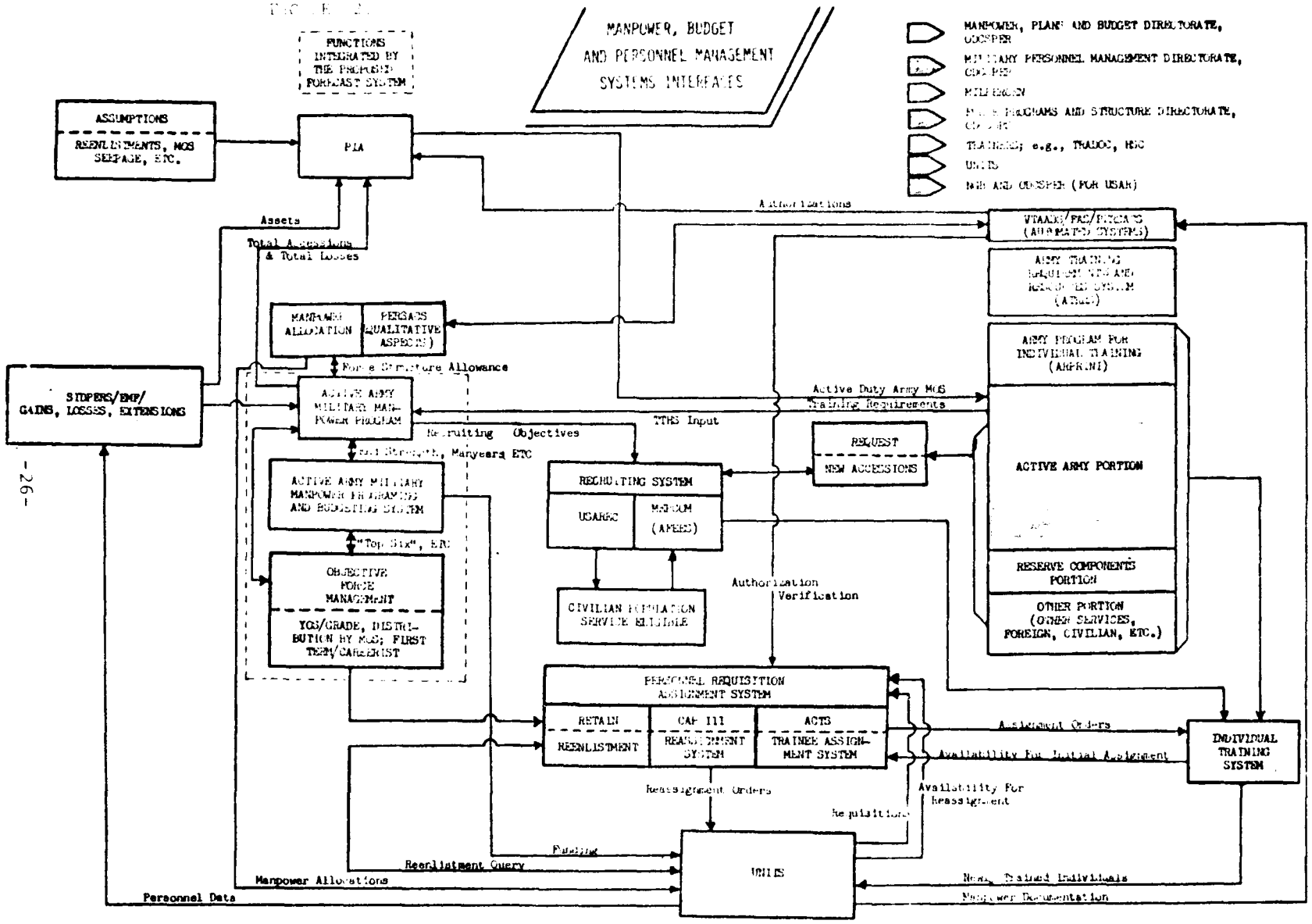
MANPOWER, BUDGET AND PERSONNEL MANAGEMENT SYSTEMS INTERFACES
MANPOWER, PLANS AND BUDGET DIRECTORATE, ODCSPER
MILITARY PERSONNEL MANAGEMENT DIRECTORATE, ODCSPER
MILPERCEN
FORCE PROGRAMS AND STRUCTURE DIRECTORATE, ODCSOPS
TRAINING; e.g., TRADOC, HSC
UNITS
NGB AND ODCSPER (FOR USAR)
FUNCTIONS INTEGRATED BY THE PROPOSED FORECAST SYSTEM
ASSUMPTIONS
REENLISTMENTS, MOS SEEPAGE, ETC.
PIA
Assets
Total Accessions & Total Losses
Authorizations
VTAADS/PAC/PERSACS (AUTOMATED SYSTEMS)
ARMY TRAINING REQUIREMENTS AND RESOURCES SYSTEM (ARTRAS)
MANPOWER ALLOCATION
PERSACS (QUALITATIVE ASPECTS)
Force Structure Allowance
ARMY PROGRAM FOR INDIVIDUAL TRAINING (ARPRINT)
STIDERS/EMF/ GAINS, LOSSES, EXTENSIONS
ACTIVE ARMY MILITARY MANPOWER PROGRAM
Active Duty Army MOS Training Requirements
TTHS Input
Recruiting Objectives
Unit Strength, Manyears ETC
REQUEST
NEW ACCESSIONS
ACTIVE ARMY PORTION
ACTIVE ARMY MILITARY MANPOWER PROGRAMMING AND BUDGETING SYSTEM
RECRUITING SYSTEM
USAREC
MEPCOM (AMEES)
"Top Six", ETC
OBJECTIVE FORCE MANAGEMENT
YGS/GRADE, DISTRIBUTION BY MOS; FIRST TERM/CAREERIST
CIVILIAN POPULATION SERVICE ELIGIBLE
Authorization Verification
RESERVE COMPONENTS PORTION
OTHER PORTION (OTHER SERVICES, FOREIGN, CIVILIAN, ETC.)
PERSONNEL REQUISITION ASSIGNMENT SYSTEM
RETAIN
REENLISTMENT
CAP III
REASSIGNMENT SYSTEM
ACTS
TRAINEE ASSIGNMENT SYSTEM
Assignment Orders
Availability For Initial Assignment
INDIVIDUAL TRAINING SYSTEM
Reassignment Orders
Availability For Reassignment
Requisitions
Funding
Reenlistment Query
UNITS
Manpower Allocations
New, Trained Individuals
Manpower Documentation
Personnel Data

FIGURE 3.

PERSONNEL SYSTEM R&D MAP

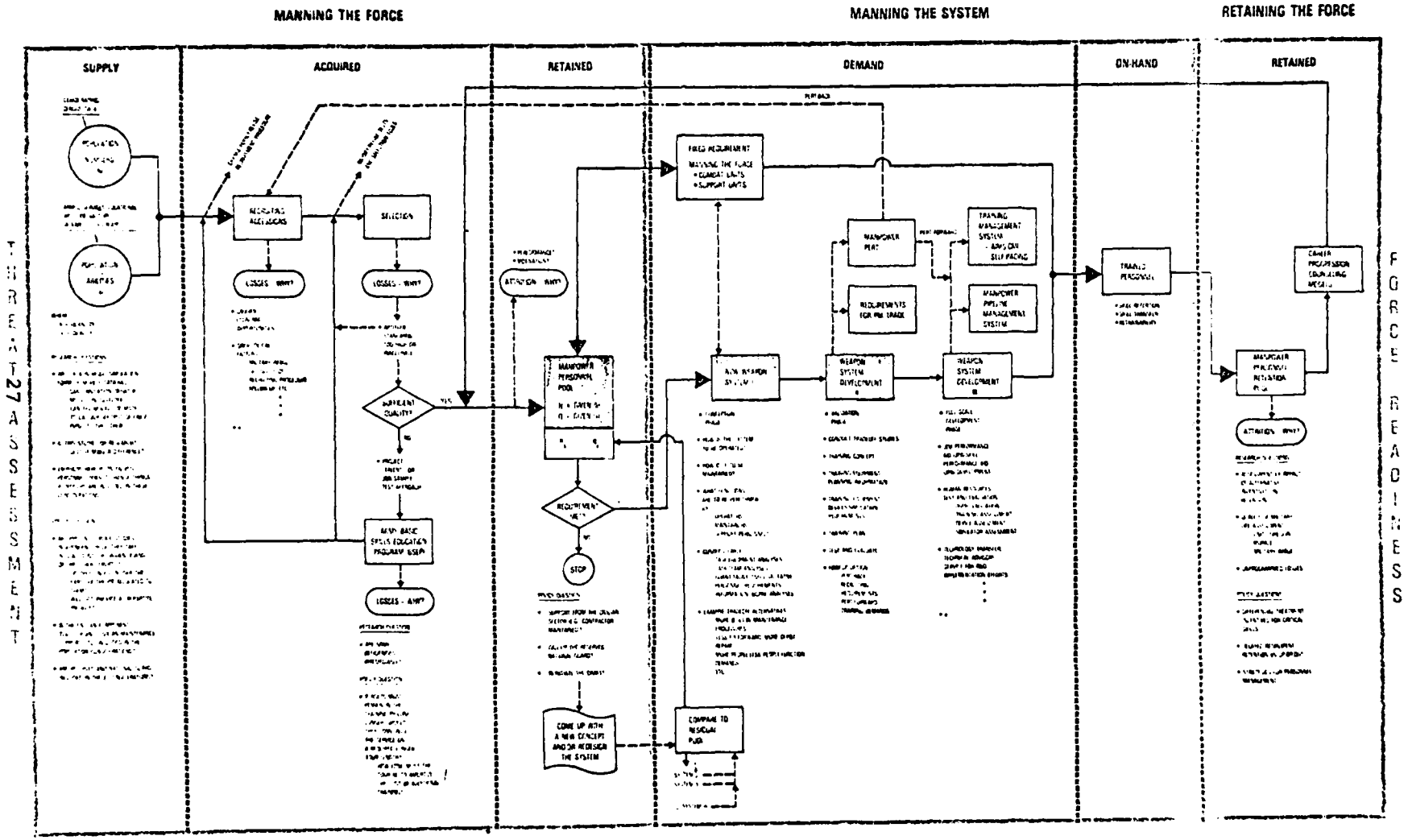

3. Human Issues Modeling. The group considered two broad classes of models. The first class has as its objective to determine and/or predict force composition. The interplay of personnel characteristics vital statistics, management policies, and force number limits are the key variables in these models. The second class consider human attributes and characteristics in force effectiveness equations. Characteristics of individuals and groups such as motivation, morale, leadership, cohesiveness and turbulence are examples of variables whose impacting upon combat effectiveness that need to be quantified and assessed through modeling and testing. Understanding how the human dimension contributes to the effectiveness of a total system and how to quantify that contribution has been largely neglected. It is the belief of the study group that such understanding is amenable to research and quantification.

4. Force Composition Models.

a. There are a relatively large number of Army models which are designed to predict force composition or to model other aspects of the Army manpower and personnel system. These models serve functions from determining personnel manning requirements for MOSs to allowing policy makers to ask certain "what if" questions such as what would happen to the composition of the force if certain policy changes are made (e.g., promotion rates). For the most part, the users of these models reside within ODCSPER.

b. While the Army Staff has been the primary model user, the initiative to develop models has orginated in the Office of the Secretary of Defense (OSD) or the Army Secretariat. For example, the Army's FORECAST model, a large multilevel personnel model, is being developed within OASA (M&RA). Contractors have developed many of these models but we also found that the CAA has the capability to create manpower models and has developed several. The Army Staff needs to become more involved in model development. As users they should be actively involved in assessing modeling requirements and in interacting with developers.

c. Many of the problems the Army has in dealing with human issues affect the Army's manpower modeling efforts. We found a proliferation of relatively small single purpose models that were not designed to interface with models which have complementary functions. Both the Army and the Air Force have developed models that have not been used because they tend to have a broader scope than any of the small user organizations. The force structure models reflect the lack of integration and uniform guidance within the manpower, personnel and training systems. Similar problems occur within the Navy.

d. FORECAST, an Army model, and ISEM, an Air Force model, are currently under development. They are broader in scope than the current models in use. They attempt to deal with the interactions in the system. The acceptance of these models will depend upon the ability of the designers to enlist policy maker's aid in their development and to win commitment to their eventual use. These models will have to provide data in a usable form, at an acceptable level of detail. Since at present the model designers are not their users, the designers must be aware of user's needs and will have to effectively market their products to insure their use.

5. Force Effectiveness Models.

a. There is a "gut" feeling expressed by military leaders that such factors as leadership, morale, fatigue, turbulence and cohesiveness have a large, currently unmeasured, impact on force effectiveness. These human dimensions are currently not represented in Army combat models. The Army has a tradition of superior leadership extending over two centuries and many conflicts. From such leadership have come commands high in morale, loyal to their leaders and fully effective in combat. The Army has a large number of combat models but their outcomes are for the most part dictated by fire power and other hardware considerations. To a large degree, soldiers are considered to be constants within these models. Very little effort has been dedicated to quantifying the impact of the human dimension for inclusion within force effectiveness models. In part this may be due to a belief that many of these characteristics or variables cannot be effectively measured or quantified. Such factors as leadership, cohesiveness, etc., are considered to be qualitative elements that are difficult to objectively define and if they could be defined their affect would be highly variable.

b. Either the Army quantifies the clearly quantifiable, e.g., number of personnel by age, sex, intelligence, etc., or there is a tendency to measure sub-elemental features of the system and to use these measures as surrogates for estimating total system effectiveness. While some of these surrogates may be adequate, there are many more that are not. The Army clearly needs to begin to appreciate the critical influence of human characteristics, and individual and group performance characteristics upon system wide effectiveness. The Army has been preoccupied with measuring effects of materiel and, to a large extent has neglected the human dimension. Recent modeling developments in industry have had some initial success in including human issues such as cohesiveness and fatigue in combat models. Methods for quantifying human dimension variables have to be further developed and human issue variables included in Army models.

c. Models for quantifying these human dimensions require a test data base. Some of the Army's training simulations are excellent sources for research into the impact of various human characteristics upon mission accomplishment. Such research can be performed in conjunction with simulator training.

Combat simulations with man played modules could also be excellent tools for collecting data. Another source for data collection could be the field exercises performed by soldiers and units at the National Training Center and during other training exercise.

d. A great deal of data has already been collected. Human research activities, and regularly conducted tests and training activities could provide an excellent base for model development. Potential available sources of data need to be mined prior to collecting new test data.

e. Such a wealth of data can materially add to improving policy making and anticipating potential outcomes of decisions. Without this kind of data, the human aspects of Army systems cannot be documented and subjected to formal analysis. The Army needs this type of analysis if it hopes to deal with its human issues internally and with Congress.

D. RECOMMENDATIONS.

1. Need for a Human Issues Integrating Element Within the Army Staff.

a. The Army should task a full-time organizational element within the staff that will have authority to integrate and coordinate human issues policy development, research, analysis and modeling activities. The group would serve the purpose of elevating human issues considerations and combining them with high level policy determinations.

b. This group should be responsible for assuring the development of appropriate maps as management tools. It would maintain a holistic view in the construction of system maps. This approach would eliminate narrow single purpose planning between R&D, doctrine, training, weapons systems, and materiel acquisition.

c. This organization must receive high level support and have the authority and proper mix of expertise to do its job effectively. We suggest that it be assigned at either the Chief of Staff or Deputy Chief of Staff level.

2. Need for Integrated Force Composition and Force Effectiveness Models.

a. The integrating element discussed above should have overall policy responsibility for the Army's human issues modeling activities. The study group sees elements within OASA(M&RA), ODCSLOG, ODCSPER, ODCSRDA, ODCSOPS, TRADOC and US Army Materiel Development and Readiness Command (DARCOM) as primary model users. The integrating element on the Army Staff would serve as a focal point between

model developers and users. The integrating element would become the major proponent for human issues model development and applications within the Army. It would focus Army needs rather than respond to OSD impetus. We believe the Army Staff should become more involved in developing model requirements, and in guiding model development.

b. There are currently operational a number of Force Composition models. These models are often narrow and single purpose. Models that should "talk" to each other do not have the capability to interact. The study group supports the development of models, such as the FORECAST model which will supplant many of the current models and provide the Army with a holistic Force Composition model.

c. There is considerable Force Composition modeling activity occurring in the other Services and OSD. The Army should coordinate its efforts with those of the other Services to eliminate duplication and to further modeling technology through an active interchange of ideas.

d. The Army needs to break up its mind-set which deters it from attempting to measure the influence of human characteristics on system effectiveness. The study group is convinced that Force Effectiveness models that include human dimensions can be developed. Further, we believe that hard-to-quantify human characteristics can be quantified and included.

e. The study group endorses the Army's hierarchical approach to combat effectiveness modeling. However, we urgently feel that the human dimension must be given full consideration in development of each element in the hierarchy.

3. Need for a Center of Excellence for Human Issues Modeling.

a. The development of Force Effectiveness models that fully incorporate such human issues as fatigue, leadership, cohesiveness, morale, and motivation will require a center dedicated to their development. The center should have an interdisciplinary staff of operations researchers, psychologists, economists, statisticians, computer scientists, and other relevant disciplines. The integrating element on the Army Staff would direct the center and provide it guidance and priorities.

b. The function of this center would be to relate current and future research findings to maintaining high levels of readiness, enhancing combat effectiveness, predicting alternative outcomes and providing relevant human resource management considerations for policy development. We anticipate that the center would become a focal

point for human issues modeling expertise. The academic community and industry should be solicited for inputs and assistance in improving the state-of-the-art of such modeling technology.

c. Considerable test data will be required to support the modeling activities. There is a need to collect and analyze live test data on individual, small group, and unit performance and relate performance outcomes to human issues dimensions. Such documentation would add materially to understanding human performance factors and optimizing their effect in both wartime and peacetime environments. Model development and application requires extensive and detailed inputs. Tests need to be conducted to provide these inputs. Any discussion of models must include a discussion of related tests. The center will need the authority to conduct necessary model tests. The group envisions the need for a human dimensions laboratory or proving ground. The presently envisioned National Training Center, US Army Combat Developments Experimentation Command (CDEC), or TRADOC Combined Arms Test Activities (TCATA) are excellent candidates for incorporating such an activity.

d. No Army agency is presently constituted to fulfill the role of the center for human dimensions modeling expertise. There are several possible alternatives to meeting this need:

(1) Establish a new "center" for modeling the human dimension,

(2) Grow ARI into such a center,

(3) Grow a major existing analytical agency such as the CAA into such a center.

4. Need for Increased Army Emphasis on the Human Dimension in System Development.

a. Over the course of our meetings, the study group came away with the impression that human issues considerations are frequently fragmented by Army management. The predominant impact of hardware is quite evident. While the major thrust of our recommendations deal with human issues, mapping and modeling, we feel the need to call for a greater general awareness of human issues in Army activities.

b. This need points up the requirement for specialization of human resource management functions and the development of ongoing expertise in people management as well as hardward management.

c. Personnel, manpower, and human resources considerations must be given top level attention, support and ongoing inspection.

The Army's personnel leaders must function with equal authority to their hardware counterparts. Since there is increased emphasis on human issues, the DA Staff and Secretariat will need to provide full support to the personnel arena.

d. There need to be high visibility, high status, and career enhancing pathways in both personnel and research and development management within the Army.

e. All too often knowledgeable, technically competent leaders' expertise is lost. Their replacements essentially are starting over at the beginning of the learning curve. This constant turbulence precludes efficient development, use and transferrence of new knowledges and applications of existing technologies to meeting short-term operational needs and long-term planning requirements of the Army.

f. It is imperative that human requirements, human performance, and human issues be considered at the inception of weapons design and throughout weapons systems development. But in doing that the Army must consider the total system -- with the soldier-operator integral to the success of that system -- in its weapons systems applications, doctrine, tactics, and deployment decisions.

5. Need for Continued ASB Involvement in Human Issues.

This report, along with those submitted by Human Issues Groups 1 and 2, represents an initial step toward integrating and elevating Army considerations for human issues, policy formulation, research, analysis, and modeling. The ASB has a future role to play in further assessment of the integrating element discussed in recommendation 1. It should also consult with the Army on formation of the modeling center discussed in recommendation 3. The ASB must consider that it has a long-term commitment to elevating the level of the Army's knowledge about and concern for its human dimension.

APPENDIX A
BRIEFERS OF HUMAN ISSUES GROUP 1
and
SELECTED ARMY GROUPS CONCERNED WITH HUMAN ISSUES*

This appendix contains descriptions of special committees, task forces, and organizations which are concerned with human issues.

The ASB Human Issues Group 1 is very appreciative of the contributions of the individuals listed below who briefed the group on the human issues activities of their committees, task forces, or organizations:

Name: Army Personnel Systems Committee (APSC).

Membership: Twelve members from Army Secretariat/Army General Staff level. Co-chaired by the Vice Chief of Staff of the Army and the Under Secretary of the Army with chairmanship rotating on six-month basis.

Purpose: To focus top level attention on human issues research and to formulate human issues programs to meet future needs.

Functions: Monitoring the output of the PPRC (see below) and providing high level guidance to accomplish purposes stated above.

Name: Personnel Program Review Committee (PPRC).

Membership: Approximately 20 members including representatives from OASA(RDA); Office of the Assistant Secretary of the Army (Installations, Logistics & Financial Management)(OASA(IL&FM)); Studies Program Management Office (Management Directorate)(SPMO-(MD)); Office Deputy Chief of Staff for Operations and Plans (ODCSOPS)(Director of Force Management and Director of Training); Office Chief of Army Reserve (OCAR); National Guard Bureau (NGB); Director of Program Analysis & Evaluation (DPA&E)(DAS); Office Deputy Chief of Staff for Research, Development and Acquisition (ODCSRDA); Office Comptroller of the Army (OCOA)(DAS); Office of the Surgeon General (OTSG); Office of the Adjutant General (OTAG); Commander, Military Personnel Center (CDR, MILPERCEN); Commander ARI; Director of Human Resource Development (ODCSPER); and Director of Military Personnel Management (ODCSPER); Director of Manpower, Plans, and Budget (ODCSPER); Director of Civilian Personnel (ODCSPER). Co-chaired concurrently by the Deputy for Human Systems and Resources (OASA(M&RA)) and the Director of Human Resources Development (ODCSPER).

*These groups do not include all the Army groups which are concerned with human issues. These were groups of which we were aware or which were brought to our attention, and the compendium is not intended to be a comprehensive one.

Purpose: To focus top level attention on human issues research and to formulate human issues programs to meet future needs (with APSC, see above).

Functions: Assisting the ASA(M&RA) and the DCSPER in human issues area -- e.g., integrating and establishing priorities for human issues programs and research and to review, present, and defend human issues programs during budgetary revision and processing.

Briefer: LTC Richard A. James
Human Resources Development Directorate
Office Deputy Chief of Staff for Personnel

LTC James served as the recorder for the PPRC and the APSC. These two newly formed committees have recently been established, and the precise details of their functioning have not yet been worked out. The PPRC is seen as more coordinative than directive, while the APSC monitors the output of the PPRC and provides guidance at a higher level. To date, the committees have reviewed the Army Continuing Education System (ACES). At the close of the APSC meeting, the principal guidance given by the Vice Chief of Staff was that the Army Staff and TRADOC, under The Adjutant General Center (TAGCEN) lead, develop a written plan with priorities established to implement the ASA(M&RA) recommendations for the ACES

Name: U.S. Army Research Institute for the Behavioral and Social Sciences (ARI).

Personnel and Training Research Laboratory
Organizations and Systems Research Laboratory
Plus 10 field units.

Affiliation: ODCSPER

Location: Laboratories in Alexandria, VA; field units in nine CONUS locations and in Germany.

Number of people: 353

Relevant activities: Conducting behavioral and social science research for the Army. Research areas include personnel, training, leadership and management, manpower and educational systems, simulation systems, and human factors.

Name: Walter Reed Army Institute of Research (WRAIR)

Affiliation: Surgeon General

Location: Washington, D.C.

Number of people: 911

Relevant activities: Conducting health services research, including psychiatric casualties in combat, the Army family, etc.

Name: Human Engineering Laboratory (HEL)

Affiliation: DARCOM

Location: Aberdeen, Maryland

Number of people: 175

Relevant activities: Conducting human engineering research to support materiel systems.

Name: Administration Center (ADMINCEN)

Affiliation: TRADOC

Location: Ft. Benjamin Harrison

Number of people: 1677

Relevant activities: Developing personnel doctrine.

Name: Concepts Analysis Agency (CAA)

Affiliation: Director of the Army Staff

Location: Bethesda, Maryland

Number of people: 300

Relevant activities: Analyzing Army-wide personnel issues which can be addressed by quantitative analysis.

Name: Affordability Analysis and Review Team (Personnel Affordability)

Affiliation: Manpower, Management and Analysis Division, ODCSPER

Location: Pentagon

Number of people: 4

Relevant activities: Reviewing manpower and personnel implications of changes to the force structure caused by the introduction of new materiel systems and/or changes in doctrine/tactics to determine the manpower/personnel supportability of these requirements.

Briefer: LTC George Lawton
Affordability Analysis and Review Team

One of the Army's dilemmas is that the new materiel systems will require more people with increased skills at the same time that the human resources pool of people 17-22 is decreasing in size. LTC Lawton's group is attempting to get personnel requirements identified early in the development of new systems and to get the Army to determine trade-offs when increased human resources are required by new systems.

Name: Human Systems and Resources

Affiliation: OASA(M&RA)

Location: Pentagon

Number of people: 3

Relevant activities: Providing overall supervision and support for human systems and resources programs throughout the Active Army, National Guard, and Army Reserve. Serving as Secretariat focal point for oversight, integration, and advocacy of diverse initiatives which affect human resources and quality of service people's lives.

Briefer: Dr. Sue Dueitt, Deputy for Human Systems & Resources, Office of the Assistant Secretary of the Army (Manpower and Reserve Affairs)

Dr. Dueitt co-chairs (with BG J.C. Lutz) the PPRC. Dr. Dueitt suggested that Human Issues Group 1 might help identify topics

to be addressed by the PPRC and the APSC and to advise on organizational strategies to insure consideration of human issues in the budgetary process.

Name: Human Resources Management Project (HRM)

Affiliation: ODCSPER (ADMINCEN is action agency)

Location: Ft. Benjamin Harrison

Number of people: 4

Relevant activities: Integrating HRM into the Army Personnel Management System and the total command and staff structure by: examining human resources related functions and program for need, redundancy, and voids; developing concepts and doctrine for integrating human resources activities into command and staff structure; developing policy guidance and doctrine to achieve goals of HRM within the Military Personnel Management System; and providing framework for commanders to make decisions on resource allocations (e.g., Personnel, Funds and Equipment realignments).

Name: Human Resources Development Directorate (HRDD)

Affiliation: ODCSPER

Location: Pentagon

Number of people: 100

Relevant activities: Primarily concerned with human readiness and the high priority "people" program and actions that impact on the climate of the Army: leadership, soldier commitment and unit cohesion, professional ethics, compensation and entitlements, quality of life, air and ground safety, law enforcement, organizational effectiveness, drug and alcohol abuse, and equal opportunity.

Briefers: BG J. C. Lutz
Director, Human Resources Development
Office, Deputy Chief of Staff for Personnel

BG Lutz co-chairs (with Dr. Sue Dueitt) the PPRC. The mission of HRDD is to execute DA Staff responsibility for policy, plans,

and programs that affect individual commitment and organizational cohesiveness, develop individual potential, and attain the minimum standard of quality of life and an organizational climate that enhances the attitudes, motivation, and sense of well-being of soldiers and their families.

LTC M. T. Plummer
Chief, Leadership & Organizational Effectiveness Division
Human Resources Development Directorate
Office, Deputy Chief of Staff for Personnel

LTC Plummer presented information on a variety of Army programs which address human issues.

Name: Quality of Life Office (QOL)

Affiliation: HRDD, ODCSPER

Location: Pentagon

Number of People: 8

Relevant activities: The primary purpose of this office is to promote the military group commitment and cohesiveness essential to combat effectiveness

Briefer: LTC Lanny Standridge
Quality of Life Office

Preliminary minimum standards for quality of life have been drawn up and distributed to major commands for review and recommendations. An instrument was developed to assess soldiers' quality of life. The instrument was administered Army-wide during the fall of 1979, and LTC Standridge presented some findings resulting from this data collection.

Name: Alcohol and Drug Policy Office

Affiliation: HRDD, ODCSPER

Location: Pentagon

Number of people: 6

Relevant activities: Developing policy and providing guidance for alcohol and other drug abuse prevention (including education and training), identification, treatment, rehabilitation, and evaluation for the Army.

Name: The Adjutant General Center (TAGCEN)

Affiliation: The Adjutant General

Location: Washington, D.C.

Number of people: 322 (in the relevant subdivisions of the Army Education Directorate, the Morale Support Directorate, Clubs and Community Activities, and the Community Support Directorate).

Relevant activities: Accomplishing or monitoring on an Army-wide basis TAG missions relating to "soldier quality of life" -- Army community/personnel support programs. These "human goals" are identified as follows: (1) to provide the best possible leisure activities to soldiers as a means of promoting high morale and combat effectiveness; (2) to provide the highest quality support to soldiers and their dependents in the community services area; (3) to promote skill and development and pursuit of educational opportunities.

Name: Task Force DELTA

Affiliation: TRADOC

Location: Ft. Monroe, VA

Number of people: 4

Relevant activities: Long-range concept development concerned with how the Army accomplishes its mission through people. (Scheduled to be disbanded in June 1980.)

Briefer: COL D.M. Malone
Task Force DELTA

The members of this task force have been studying the interrelationships of the human components and how they can lead to force readiness. COL Malone described some of the efforts to close the gap between the Army's actual and potential force readiness. It has been determined that this gap involves information flow.

Name: Army 86 (Army of the Future)

Affiliation: TRADOC

Location: Ft. Monroe, VA

Number of people: Indeterminant. Personnel working on Army 86 represent all of the proponent schools, centers, and integrating centers within TRADOC. The Deputy Chief of Staff for Combat Development (DCSCD)has overall TRADOC responsibility for coordination of Army 86.

Relevant activities: Army 86 is a force modernization process capitalizing on new equipment, doctrine, and concepts based on the threat for 1986. Army 86 is a fallout from the Battlefield Development Plan (BDP), which is intended to serve as TRADOC's operative road map into the future. Its purpose is to develop the major issues facing the Army as it moves into the 1980's.

Name: Human Dimensions Directorate (HDD)

Affiliation: TRADOC

Location: Ft. Monroe, VA

Number of people: 8

Relevant activities: The HDD mission is the combat development staff element responsible for insuring that human dimensions concepts are developed and integrated into people, operations, and logistics doctrine and policy; and that human performance parameters are included early and continuously throughout the materiel systems acquisition process.

Briefer: COL Frank D. Bettinger
Director, Human Dimensions Directorate

COL Bettinger explained that the activities of HDD supplemented those of the Army 86 activities. HDD translates into action the concepts developed by COL Malone's group. COL Bettinger stressed that the development of people doctrine has not kept pace with the Army's modernization effort and that there is a lack of integration of human issues. That is, there are a variety of researchers, operators, and doctrine developers all concerned with human issues, but no means by which to integrate and focus their efforts. COL Bettinger also emphasized the need for considering the human dimension earlier in the materiel acquisition process.

Name: Manning the Force Task Force

Affiliation: ODCSPER

Location: Pentagon

Number of people: 14

Relevant activities: The focus of the effort was on acquiring more people, retaining more of those people already in the Army, and using personnel more productively. (Study has been completed. Issues were briefed to the VCSA and approved by him for implementation by operators within the DCSPER family. Work of the task force is continuing on civilian personnel issues.)

Briefer: BG W.J. Mehl
Deputy Director of Manpower, Plans, and Budget, ODCSPER

BG Mehl discussed "manning" the force. BG Mehl's group assumes a 24-division force with the same national attitudes, unemployment situation, and inflation rates as are currently the case, and with no peacetime draft or registration. Most suggestions this group have developed have involved increased expenditures of money --

the modification (liberalization) of the Voluntary Educational Assistance Program, expanding eligibility for bonuses, dual training, etc. BG Mehl mentioned the need for measures of commitment and motivation.

Name: Personnel Replacement Study Group

Affiliation: TRADOC

Location: Ft. Benjamin Harrison

Number of people: 3

Relevant activities: Objectives: (1) to study current and historical replacement systems, and (2) to develop concepts and doctrines which provide for an adequate flow to the combat theater of operations.

APPENDIX B
OFFICES AND PERSONNEL MET BY MEMBERS OF GROUP 2

Office of the Secretary of the Army

Mr. D. Hardison, Deputy Undersecretary for Operations Research

Office of the Assistant Secretary for Research, Development and Acquisition

Dr. J. Yang, Deputy Assistant Secretary for Research and Development
Dr. E. Yore, Deputy for Science and Technology

Office of the Assistant Secretary for Manpower and Reserve Affairs

Dr. S. Dueitt, Deputy for Human Systems and Resources

Army Staff

Office of the Director of the Army Staff

Study Management Office

Dr. F. Dunn
Mr. P. Raisig

Office of the Deputy Chief of Staff for Research, Development and Acquisition

Dr. M. Lasser, Director of Army Research

Office of the Deputy Chief of Staff for Personnel

Research and Studies Office

Mr. J. Barber

Human Resources Directorate

LTC M. Plummer
LTC R. James
MAJ D. Rohas

US Army Research Institute for the Behavioral and Social Sciences

COL F. Hart, Commanding Officer
Dr. J. Zeidner, Technical Director

Dr. E. Johnson	Dr. M. Berkowitz
Dr. E. Dusek	Dr. L. Gellman
Dr. J. Shields	Dr. G. Nogami
Dr. M. Katz	Dr. J. Hagman
Dr. F. Harris	Dr. G. Lawton
Mr. J. Baker	Dr. J. McConnell
Dr. R. Sasmor	Mr C. Johnson

Materiel Development and Readiness Command

Office of Laboratory and Development Command Management

Mr. J. Lindwarm

Human Engineering Laboratory, Aberdeen Proving Ground, MD

Dr. J. Weisz, Technical Director
Dr. R. Monty
Mr. B. Corona
Mr. C. Fry

Other Service-Related Research Organizations

Navy Personnel Research and Development Center, San Diego, CA

CPT D. Parker, Commanding Officer
Dr. J. Regan, Technical Director
CDR H. Young
Dr. R. Sorensen
Mr. J. Silverman

The RAND Corporation, Santa Monica, CA

W. Hoehn
C. Kelley
S. Hosek
C. Roll
F. Camm, Jr.

APPENDIX C

OFFICES AND PERSONNEL MET BY MEMBERS OF GROUP 3

Office of the Secretary of Defense

OASD(MRA&L)

Dr. Sicilia, Research Office

Office of the Secretary of the Army

OASA(RDA)

Dr. Yore, Deputy for Science and Technology
Dr. Alexander, Army Science Board Human Issues Transition Committee

OASA(M&RA)

Dr. Dueitt, Deputy for Human Systems and Resources
Mr. Gompf, Deputy for Military Personnel Policy and Programs
COL Guthrie; Education, Research, and Training

DA Staff

Office of the Director of the Army Staff, Study Management Office

Dr. Dunn
Mr. Raisig

Office of the Deputy Chief of Staff for Operations and Plans

COL Whidder, Training Directorate
COL Elliott, Mobilization Directorate

Office of the Deputy Chief of Staff for Personnel

COL Swygert, Military Strength Program Office
LTC Plummer, Human Resources Directorate (HRD)
LTC James, APSC/PPRC Action Officer
LTC Hazen, MAJ Woodbury, MAJ Braze, Enlsited Division

Office of the Surgeon General

COL Graydon
MAJ Beckly
CPT Harig

National Guard Bureau

COL Burkhead
COL Hinton
COL Cristenson
LTC Martin
MAJ Walker

Office of the Chief, Army Reserve

MG Berkman, Chief, Army Reserve
COL Blanchard
COL Barrett
COL Watson

Concepts Analysis Agency

MG Whitehead, Commander
Dr. Freeman
LTC Carroll

US Army Research Institute for the Behavioral and Social Sciences

Dr. Zeidner, Technical Director
Dr. Ward
Dr. Johnson
Mr. Baker
Dr. Shields
Dr. Harris
Dr. Katz
Dr. Helme
Dr. Canter, Ft. Benjamin Harrison Field Unit

US Army Training and Doctrine Command

COL Bettinger, Human Dimension Directorate
COL Malone, Systems Doctrine Office

US Army Administration Center

COL Pole, Acting Commander
COL Habig
COL Philpott
COL Pemberton
COL Montgomery
CPT Adams

US Navy

Dr. Letsky, Office of the Deputy Chief of Naval Operations for Manpower, Personnel and Training

US Air Force

LTC Quayle, Office of Deputy Chief of Staff, Manpower and Personnel
MAJ Kerchner
CPT Polk, Air Force Human Resource Lab

Rand Corporation

Dr. Alexander
Dr. Bradley
Dr. Roll
Dr. Carpernter-Huffman
Dr. Shishko
Dr. Fisher
Dr. Perry

APPENDIX D

HQDA Ltr 15-79-9

DEPARTMENT OF THE ARMY
OFFICE OF THE ADJUTANT GENERAL AND THE ADJUTANT GENERAL CENTER
WASHINGTON, D.C. 20314

REPLY TO ATTENTION OF:

DAPE-ZBR (M) (4 Sep 79)

S: 5 October 1979
18 September 1979

Expires 17 September 1980

SUBJECT: Establishment of the Army Personnel Systems Committee (APSC) and the Personnel Program Review Committee (PPRC)

SEE DISTRIBUTION

1. PURPOSE: This letter establishes the Army Personnel Systems Committee (APSC) and the Personnel Program Review Committee (PPRC).

2. REFERENCE: HQDA Memorandum, DACS-DMS, 13 April 1979, Subject: Establishment of the Army Personnel Systems Committee (APSC) and Personnel Program Review Committee (PPRC).

3. BACKGROUND:

a. The 1978 Key Issues Conference recommended the desirability be determined of establishing a personnel version of the Research and Development Acquisition Committee (RDAC) and the Army Systems Acquisition Review Council (ASARC) to focus top level attention on human issue research, and to formulate human issue programs to meet future needs. In December 1978, DACS-DMS staffed a concept paper outlining how this might be accomplished. On 12 March 1979, the Army Policy Council (APC) was briefed regarding staff reaction to the concept paper and a number of alternatives for establishment were proposed.

b. As a result of APC consideration and review, and subsequent decisions, it was determined two committees, an Army Personnel Systems Committee (APSC) and a Personnel Program Review Committee (PPRC), would be established to fill needs stated in Para. 3a above.

4. MISSION: The APSC and the PPRC will be responsible for reviewing, evaluating, and analyzing human issues of Army interest, and making recommendations for reconciling human issues--both current and future. The primary purpose of these committees will be to provide general managerial oversight and to advise the Secretary of the Army and the Chief of Staff on human/personnel/manpower issues.

SUBJECT: Establishment of the Army Personnel Systems Committee (APSC) and the Personnel Program Review Committee (PPRC)

5. COMPOSITION, DIRECTION AND CONTROL:

a. Army Personnel Systems Committee (APSC). This Committee will serve as the focal point for the oversight of human issues (which includes personnel and manpower) planning and research to ensure that both present and potential problems are adequately addressed within the Army. The Committee will address itself to the full range of needs, problems, perceptions and concerns that pertain to the morale, well-being, commitment and readiness of the Active Army, Reserve Components, and the civilian work force.

(1) The function of the APSC will be to --

(a) Oversee the development of human issue programs to ensure that they meet the needs of the future.

(b) Determine the priority of human issue programs.

(c) Focus on changes or trends in American society and their anticipated impact on Army research and human requirements.

(d) Decide which human areas require study/research and provide direction and set priorities for the proper conduct of research over the near, mid, and long term.

(e) Ensure that the DA Staff adequately addresses human issues within their spheres of responsibility.

(f) Ensure that Army human issue programs receive adequate priority in competition with other Army programs.

(g) Oversee and provide direction to the Personnel Program Review Committee (PPRC).

(h) Review human issue programs developed by the PPRC prior to the PPRC presenting those issues before the Program Budget Committee (PBC).

(i) Provide advice and consultation to the PPRC or act as a decision making body depending on the particular issue(s) in question.

(2) The APSC will --

(a) Be co-chaired by the VCSA and the Under Secretary of the Army with the chairmanship rotating on a six-month basis. The VCSA will serve as chairman for the first six months starting from the date of the first APSC meeting.

SUBJECT: Establishment of the Army Personnel Systems Committee (APSC) and the Personnel Program Review Committee (PPRC)

(b) Consist of the following members: VCSA; USA; ASA(M&RA); ASA(RDA); DM; DCSPER; DHRD; DCSOPS; TIG; CCH; and DPA&E. Other agencies will provide part time members as appropriate.

(c) Place emphasis on face-to-face round table discussions in order to resolve problems and to determine the best course(s) of action.

(d) Provide a forum whereby significant human issues or developments may be brought to the attention of top management and senior officials.

(e) Coordinate with the Army Science Board and DoD on human issues.

(f) Meet on an as required basis, as determined by the APSC Chairperson.

(g) Meeting results will be distributed to MACOMs (DARCOM, TRADOC, FORSCOM).

(h) MACOMs will be invited on a need/special interest basis.

b. Personnel Program Review Committee (PPRC). This committee will support the APSC and assist the ASA(M&RA) and the DCSPER in developing the Army's major human issue programs.

(1) The function of the PPRC will be to --

(a) Assist the ASA(M&RA) and the DCSPER.

(b) Integrate all human issues (which includes personnel and manpower) into a single program.

(c) Recommend human issue research priorities to the APSC.

(d) Oversee human issue research and coordinate with ARI, MACOMs, and the other services.

(e) Recommend new human issue program priorities to the APSC.

(f) Present the Army's human issue program to the APSC.

(g) Present and defend Army human issue programs before the PBC during the budget review and POM process after consultation with the review by the APSC.

SUBJECT: Establishment of the Army Personnel Systems Committee (APSC) and the Personnel Program Review Committee (PPRC)

(h) Oversee human issue integration on the Army staff.

(i) Perform an annual/cyclical review of human issue programs to coincide with the POM/budget cycle.

(2) The PPRC will --

(a) Be co-chaired concurrently by the Deputy for Human Systems and Resources of OASA(M&RA) and the Director of Human Resources Development (DHRD), of ODCSPER.

(b) Consist of representatives from ASA(RDA), ASA(IL&FM), SPMO(MD), ODCSOPS (Director of Force Management and Director of Training), OCAR, NGB, DPA&E, ODCSRDA, OCOA, OTSG, OTAG, CDR MILPERCEN, CDR USARIBSS, and the Director of Human Resources Development, Director of Military Personnel Management, Director of Manpower, Plans, and Budget, and Director of Civilian Personnel, ODCSPER. Additional representatives from Army staff agencies and MACOMs may be invited when matters of primary interest to their organization are being discussed.

(c) Be responsive to the DCSPER, but also be subject to directive authority from the APSC and from the DPA&E and DAB regarding POM and budget matters.

(d) Meeting results will be distributed to MACOMs (DARCOM, TRADOC, FORSCOM).

c. A chart which depicts the relationship of the APSC and the PPRC to other key management committees is attached as Inclosure 1.

6. RESPONSIBILITIES:

a. The VCSA will have responsibility for the operation of the APSC.

b. The DCSPER will have responsibility for the operation of the PPRC, and for providing staff support for both the Army Personnel Systems Committee (APSC) and the Personnel Program Review Committee (PPRC).

c. Request names of representatives from each agency represented on the APSC and the PPRC be provided by 5 October 1979 to HQDA ODCSPER (DAPE-ZBR), 697-6700 (Autovon 227-6700).

d. Other staff agencies will participate as requested by VCSA or DCSPER.

SUBJECT: Establishment of the Army Personnel Systems Committee (APSC) and the Personnel Program Review Committee (PPRC)

7. ADMINISTRATIVE SUPPORT:

DCSPER will establish a Project Office, appropriately staffed with professional and clerical personnel, to assist in accomplishing assigned tasks and provide the required administrative support.

BY ORDER OF THE SECRETARY OF THE ARMY:

J. C. Pennington

J. C. PENNINGTON
Major General, USA
The Adjutant General

1 Incl
as

DISTRIBUTION:

OFFICE, SECRETARY OF THE ARMY
HQDA (DAAC-ZA)
HQDA (DAAG-ZA)
HQDA (DAAR-ZA)
HQDA (DACA-ZA)
HQDA (DACH-ZA)
HQDA (DACS-ZA)
HQDA (DACS-DPZ-A)
HQDA (DACS-DMZ-A)
HQDA (DAEN-ZA)
HQDA (DAIG-ZA)
HQDA (DAJA-ZA)
HQDA (DALO-ZA)
HQDA (DAMA-ZA)
HQDA (DAMI-ZA)
HQDA (DAMO-ZA)
NGB-ZA
HQDA (DAPE-ZA)
HQDA (DASG-ZA)
COMMANDERS
US Army Forces Command
US Army Training and Doctrine Command
US Army Materiel Development and Readiness Command
US Army Intelligence & Security Command
US Army Military Personnel Center
US Army Research Institute for the Behavioral and Social Sciences

COMMITTEE STRUCTURE

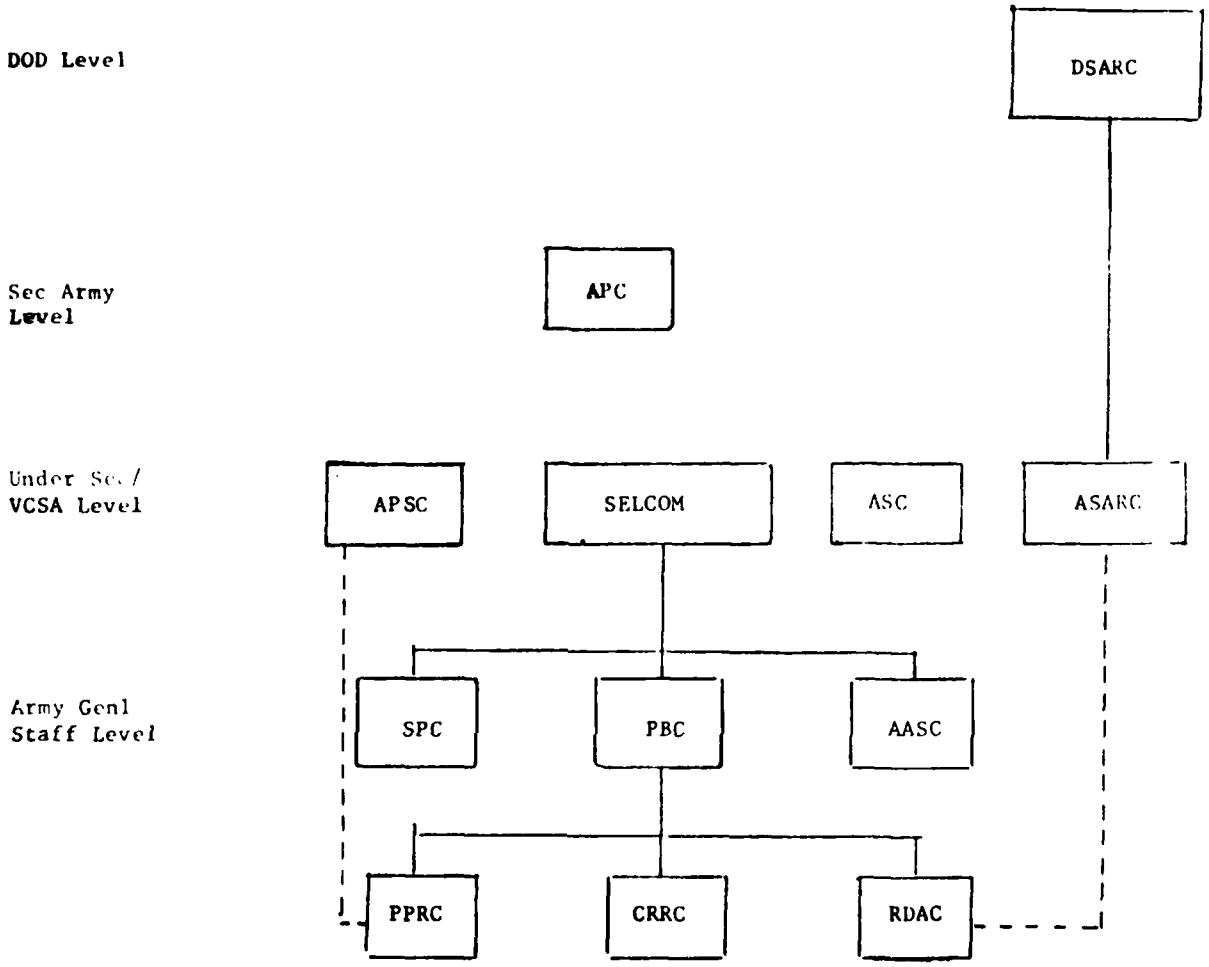

LEGEND

AASC - Army Automation Steering Committee
APSC - Army Personnel Systems Committee
APC - Army Policy Council
ASARC- Army Systems Acquisition Review Council
ASC - Army Staff Council
CRRC - Construction Requirements Review Committee
DSARC - Defense Systems Acquisition Review Council
PBC - Program Budget Committee
PPRC - Personnel Program Review Committee
RDAC - Research Development Acquisition Committee
SELCOM- Select Committee
SPC - Strategy and Planning Committe

Incl 1

APPENDIX E

HUMAN ISSUES GROUP 1

DR. RHODA BARUCH, CHAIRPERSON
PRIVATE CONSULTANT
CENTER FOR APPLIED PSYCHOLOGY
4545 - 42ND STREET, N. W. - SUITE 312
WASHINGTON, D. C. 20016

MR. PHILLIP A. KARBER
VICE PRESIDENT
NATIONAL SECURITY PROGRAMS
THE BDM CORPORATION
7915 JONES BRANCH DRIVE
McLEAN, VA 22102

DR. HAROLD E. CHEATHAM
ASSOCIATE PROFESSOR OF
PSYCHOLOGY
DEPARTMENT OF HUMANITIES
US COAST GUARD ACADEMY
NEW LONDON, CT 06320

DR. L. ALBERT SCIPIO, II
UNIVERSITY PROFESSOR OF
SPACE SCIENCES
THE GRADUATE SCHOOL
HOWARD UNIVERSITY
WASHINGTON, D. C. 20059

DR. LAUREL W. OLIVER, STAFF ASSISTANT
US ARMY RESEARCH INSTITUTE FOR THE
BEHAVIORAL AND SOCIAL SCIENCES
5001 EISENHOWER AVENUE
ALEXANDRIA, VA 22333
(703) 274-8293

Dr. L. Albert Scipio, II has found it necessary to resign from this activity.
Mr. Phillip A. Karber was unable to participate in the deliberations of the group.

APPENDIX F

HUMAN ISSUES GROUP 2

DR. ARTHUR J. ALEXANDER, CHAIRPERSON
ASSOCIATE HEAD
ECONOMICS DEPARTMENT
THE RAND CORPORATION
1700 MAIN STREET
SANTA MONICA, CA 90406

DR. KENNETH E. CLARK
DEAN, COLLEGE OF ARTS & SCIENCE
325 LATTIMORE HALL
UNIVERSITY OF ROCHESTER
ROCHESTER, NY 14627

DR. DONALD E. ERWIN
BELL LABORATORIES
HUMAN FACTORS DIVISION
ROOM 1G634
HOLMDEL, NJ 07733

DR. ANTOINE M. GARIBALDI
RESEARCH ASSOCIATE
NATIONAL INSTITUTE OF EDUCATION
EDUCATION POLICY AND ORGANIZATION DIVISION
DEPARTMENT OF HEALTH, EDUCATION & WELFARE
1200 NINETEENTH STREET, NW
WASHINGTON, DC 20208

MR. HARRY J. GOETT
PRIVATE CONSULTANT
13870 CICERONI LANE
LOS ALTOS HILLS, CA 94022

DR. ZITA M. SIMUTIS, STAFF ASSISTANT
US ARMY RESEARCH INSTITUTE FOR THE BEHAVIORAL AND SOCIAL SCIENCES
5001 EISENHOWER AVENUE
ALEXANDRIA, VA 22333
(703) 274-8918

APPENDIX G

HUMAN ISSUES GROUP 3

DR. P. PHILLIP SIDWELL, CHAIRPERSON
PRIVATE CONSULTANT
POST OFFICE BOX 88531
ATLANTA, GA 30338
(404) 394-2548

GEN LEONARD F. CHAPMAN, JR.
(USMC-RET)
PRIVATE CONSULTANT
311 VASSAR ROAD
ALEXANDRIA, VA 22314
(703) 751-2745

MR. ABRAHAM GOLUB
PRESIDENT, ABRAHAM GOLUB, INC.
WATERGATE AT LANDMARK
SUITE 607
203 YOAKUM PARKWAY
ALEXANDRIA, VA 22304
(703) 751-2744

DR. JAMES G. MILLER
PRESIDENT
UNIVERSITY OF LOUISVILLE
2301 SOUTH 3RD STREET
LOUISVILLE, KY 40208
(502) 588-5417

DR. L. WARREN MORRISON
PRESIDENT
DIRECT DATA CORPORATION
3201 N. ALAMEDA STREET
COMPTON, CA 90222
(213) 637-0701

DR. STEPHEN L. GOLDBERG, STAFF ASSISTANT
US ARMY RESEARCH INSTITUTE FOR THE
BEHAVIORAL AND SOCIAL SCIENCES
5001 EISENHOWER AVENUE
ALEXANDRIA, VA 22333
(703) 274-8695

DISTRIBUTION

Army

	No. Cys.
Secretary of the Army Washington, DC 20310	1
Under Secretary of the Army Washington, DC 20310	1
Assistant Secretary of the Army (Manpower & Reserve Affairs) Washington, DC 20310	4
Deputy Under Secretary of the Army (Operations Research) Washington, DC 20310	1
General Counsel Department of the Army Washington, DC 20310	1
Chief of Staff of the Army Washington, DC 20310	1
Vice Chief of Staff of the Army Washington, DC 20310	1
Director of the Army Staff Washington, DC 20310	1
Deputy Chief of Staff for Research, Development and Acquisition Washington, DC 20310	
ATTN: DAMA-ZA	1
ATTN: DAMA-ARZ-A	1
Deputy Chief of Staff for Personnel Washington, DC 20310	
ATTN: DAPE-ZA	1
ATTN: DAPE-ZB	1
ATTN: DAPE-CP	1
ATTN: DAPE-HR	1
ATTN: DAPE-HRC (LTC Standridge)	1
ATTN: DAPE-HRO (LTC M. T. Plummer)	1
ATTN: DAPE-MB (BG W. J. Mehl)	1
ATTN: DAPE-MBM (COL D. R. Swygert)	1
ATTN: DAPE-MPE (COL E. Wright)	1

	No. Cys.
Deputy Chief of Staff for Operations and Plans Washington, DC 20310	
ATTN: DAMO-ZA	1
ATTN: DAMO-ZD	1
ATTN: DAMO-TR	1
ATTN: DAMO-RQZ	1
Deputy Chief of Staff for Logistics Washington, DC 20310	1
The Surgeon General Department of the Army Washington, DC 20310	1
The Adjutant General Department of the Army Washington, DC 20310	1
Chief, Army Reserve Washington, DC 20310	1
Chief of Chaplains Department of the Army Washington, DC 20310	1
Chief of Public Affairs Department of the Army Washington, DC 20310	1
Director, Program Study Management Office (DACS-DMO) Office of the Chief of Staff of the Army Washington, DC 20310	1
Commander US Army Materiel Development and Readiness Command 5001 Eisenhower Avenue Alexandria, VA 22201	
ATTN: DRCCG	1
ATTN: DRCLDC (Mr. J. Lindwarm)	1
Commander US Army Forces Command Ft. McPherson, GA 30330	1
Commander US Army Training and Doctrine Command Ft. Monroe, VA 23651	1

	No. Cys.
Director Human Dimensions Directorate (ATC-HDD) Office of the Deputy Chief of Staff for Combat Developments US Army Training and Doctrine Command Ft. Monroe, VA 23651	1
Commander US Army Administration Center Ft. Benjamin Harrison, IN 42616	1
Commanding General US Army Military Personnel Center (DAPC-ZA) 2461 Eisenhower Avenue Alexandria, VA 22331	1
Commander US Army Concepts Analysis Agency 8120 Woodmont Avenue Bethesda, MD 20014	1
Director Walter Reed Army Institute of Research 6825 16th Street, NW Washington, DC 20012	1
Commander US Army Research Institute for the Behavioral and Social Sciences 5001 Eisenhower Avenue Alexandria, VA 22333	1
Technical Director US Army Research Institute for the Behavioral and Social Sciences 5001 Eisenhower Avenue Alexandria, VA 22333	1
Chief US Army Research Institute for the Behavioral and Social Sciences Field Unit - Ft. Sill P. O. Box 3066 Ft. Sill, OK 73503	1
Technical Director US Army Human Engineering Laboratory Aberdeen Proving Ground, MD 21005	1
Army Science Board Office Assistant Secretary of the Army (Research, Development and Acquisition) Washington, DC 20310	12

	No. Cys.
Office Secretary of Defense	
Assistant for Training and Personnel Systems Technology Office of the Under Secretary of Defense for Research and Engineering Washington, DC 20301	1
Director, Research and Data Office of the Deputy Assistant Secretary of Defense for Requirements, Resources and Analysis Washington, DC 20301	1
Defense Science Board Office Under Secretary of Defense, Research and Engineering Washington, DC 20301	1
Air Force	
Director of Personnel Plans Office of the Deputy Chief of Staff for Manpower and Personnel ATTN: AF/MPX (LTC Quayle) Washington, DC 20330	1
US Air Force Scientific Advisory Board HQS US Air Force Washington, DC 20330	1
Navy	
Commander Navy Personnel Research and Development Center Code 00 San Diego, CA 92152	1
Research, Development and Studies Branch Deputy Chief of Naval Operations (Manpower, Personnel and Training) Chief of Naval Personnel OP-102 (M. K. Malehorn) Washington, DC 20310	1
Naval Research Advisory Committee Office of the Secretary Washington, DC 20350	1

Other

	No. Cys.
DA Committee Management Office(SAAA-SS) Washington, DC 20310 FOR: Library of Congress	8
Defense Documentation Center Defense Supply Agency ATTN: DDC-TC Cameron Station Alexandria, VA 22314	12

DAT
FILM

2-