AD-A085 106 SHAKER RESEARCH CORP BALLSTON LAKE N Y F/G 13/9
ROTOR-BEARING DYNAMICS TECHNOLOGY DESIGN GUIDE. PART V. DYNAMIC--ETC(U)
MAR 80 P E ALLAIRE, J C NICHOLAS, E J GUNTER F33615-76-C-2038
UNCLASSIFIED SRC-78-TR-35 AFAPL-TR-78-6-PT-5 NL

1 OF 1
AD A
085106

END
DATE
FILMED
7-80
DTIC

AFAPL-TR-78-6
Part V

LEVEL III

A082 355

ADA085106

ROTOR-BEARING DYNAMICS TECHNOLOGY DESIGN GUIDE

Part V DYNAMIC ANALYSIS OF INCOMPRESSIBLE FLUID FILM BEARINGS

DTIC
ELECTE
JUN 4 1980
S C

SHAKER RESEARCH CORP.
BALLSTON LAKE, NEW YORK 12019

MARCH 1980

TECHNICAL REPORT AFAPL-TR-78-6, Part V
Interim Report for Period September 1977 - January 1979

Approved for public release; distribution unlimited.

AIR FORCE AERO PROPULSION LABORATORY
AIR FORCE WRIGHT AERONAUTICAL LABORATORIES
AIR FORCE SYSTEMS COMMAND
WRIGHT-PATTERSON AIR FORCE BASE, OHIO 45433

DDC FILE COPY

80 6 2 081

NOTICE

When Government drawings, specifications, or other data are used for any purpose other than in connection with a definitely related Government procurement operation, the United States Government thereby incurs no responsibility nor any obligation whatsoever; and the fact that the Government may have formulated, furnished, or in any way supplied the said drawings, specifications, or other data, is not to be regarded by implication or otherwise as in any manner licensing the holder or any other person or corporation, or conveying any rights or permission to manufacture, use, or sell any patented invention that may in any way be related thereto.

This report has been reviewed by the Information Office (OI) and is releasable to the National Technical Information Service (NTIS). At NTIS, it will be available to the general public, including foreign nations.

This technical report has been reviewed and is approved for publication.

John B. Schrand
JOHN B. SCHRAND
Project Engineer

H A Beane IV, Acting
HOWARD F. JONES
Chief, Lubrication Branch

FOR THE COMMANDER

Robert D. Sherrill
ROBERT D. SHERRILL
Acting Chief, Fuels and Lubrication Division

If your address has changed, if you wish to be removed from our mailing list, or if the addressee is no longer employed by your organization please notify AFWAL/POSL, WPAFB, OH 45433 to help us maintain a current mailing list.

Copies of this report should not be returned unless return is required by security considerations, contractual obligations, or notice on a specific document.

AIR FORCE/56780/20 May 1980 — 260

Unclassified

SECURITY CLASSIFICATION OF THIS PAGE (When Data Entered)

REPORT DOCUMENTATION PAGE

READ INSTRUCTIONS BEFORE COMPLETING FORM

1. REPORT NUMBER: AFAPL-TR-78-6-PT-5
2. GOVT ACCESSION NO.: AD-A085106
3. RECIPIENT'S CATALOG NUMBER:

4. TITLE (and Subtitle): ROTOR-BEARING DYNAMICS TECHNOLOGY DESIGN GUIDE. PART V, DYNAMIC ANALYSIS OF INCOMPRESSIBLE FLUID FILM BEARINGS.

5. TYPE OF REPORT & PERIOD COVERED: Interim Report. 15 Sep[redacted]77-15 Jan[redacted]78

6. PERFORMING ORG. REPORT NUMBER: SR-78-TR-35

7. AUTHOR(s): Paul E. Allaire, Edgar J. Gunter, John C. Nicholas, Coda H. T. Pan

8. CONTRACT OR GRANT NUMBER(s): F33615-76-C-2038

9. PERFORMING ORGANIZATION NAME AND ADDRESS:
Shaker Research Corporation
Northway 10 Executive Park
Ballston Lake, N. Y. 12019

10. PROGRAM ELEMENT, PROJECT, TASK AREA & WORK UNIT NUMBERS: 3048-06-85

11. CONTROLLING OFFICE NAME AND ADDRESS:
Air Force Aero Propulsion Laboratory (SFL)
Air Force Systems Command
Wright-Patterson AFB, Ohio 45433

12. REPORT DATE: Mar[redacted]80

13. NUMBER OF PAGES: 83

14. MONITORING AGENCY NAME & ADDRESS (if different from Controlling Office):

15. SECURITY CLASS. (of this report): Unclassified

15a. DECLASSIFICATION/DOWNGRADING SCHEDULE:

16. DISTRIBUTION STATEMENT (of this Report):
Approved for public release; distribution unlimited.

17. DISTRIBUTION STATEMENT (of the abstract entered in Block 20, if different from Report):

18. SUPPLEMENTARY NOTES:

19. KEY WORDS (Continue on reverse side if necessary and identify by block number):
Fluid Film Bearings
Journal Bearings
Hydrodynamic Lubrication
Dynamic Bearing Coefficients
Turbine Bearings
Rotordynamics

20. ABSTRACT (Continue on reverse side if necessary and identify by block number):

This report gives the equilibrium position, bearing cofficients, friction torque, and oil flow for plain journal, multilobe, and tilting pad journal bearings. For multilobe bearings, various combinations of preload, number of pads, and load direction are evaluated. Tilting pad bearings are analyzed for various combinations of length to diameter ratio, preload, number of pads, and load direction.

DD FORM 1 JAN 73 1473 EDITION OF 1 NOV 65 IS OBSOLETE
S/N 0102-014-6601

Unclassified

SECURITY CLASSIFICATION OF THIS PAGE (When Data Entered)

FOREWORD

The work reported herein was the result of a subcontract to Shaker Research Corporation for a partial fulfillment of USAF Contract No. F 33615-76-C-2038. The subcontractor, represented by Drs. Paul E. Allaire, John C. Nicholas, and Edgar J. Gunter, who were faculty members of the University of Virginia, Department of Mechanical and Aerospace Engineering at Charlottesville, Virginia, was responsible for the technical content of this work. Dr. Coda H. T. Pan, acting as the Principal Investigator of the prime contract, provided technical editorship. The contract was initiated under Project 3048, "Fuels, Lubrication, and Fire Protection," Task 304806, "Aerospace Lubrication," Work Unit 30480685, "Rotor-Bearing Dynamics Design."

The work reported herein was performed during the period 15 September 1977 to 15 June 1978, under the direction of John B. Schrand (AFWAL/POSL and Dr. James F. Dill (AFWAL/POSL), Project Engineers. The report was released by Shaker Research Corporation in January 1979.

Accession For
NTIS GRA&I
DDC TAB
Unannounced
Justification
By
Distribution/
Availability Codes
Avail and/or
Dist Special
A

PRECEDING PAGE BLANK-NOT FILMED

TABLE OF CONTENTS

		Page
Section I	INTRODUCTION	1
Section II	LUBRICATION THEORY	3
Section III	BEARING TYPES	8
	3.1 Plain Journal Bearing	8
	3.2 Multilobe Bearing	8
	3.3 Tilting Pad Bearing	10
Section IV	BEARING DATA	18
	4.1 Plain Journal Bearings	19
	4.2 Multilobe Bearings	19
	4.3 Tilting Pad Bearings	19
Section V	BOUNDARY CONDITIONS	64
	5.1 Types of Conditions	64
	5.2 Half Sommerfeld Condition	69
	5.3 Reynolds Condition	75
	5.4 Conclusions	81
REFERENCES		83

LIST OF ILLUSTRATIONS

Figure		Page
1	Bearing Coordinate System	4
2	Boundary Conditions for Plain Journal Bearing	5
3	Boundary Conditions	7
4	Plain Journal Bearing	9
5	Multilobe Bearing Geometry	11
6	Tilt Pad Bearing Schematic	12
7	Single Pad Schematic	15
8	Principal Stiffnesses vs. Sommerfeld Number for Plain Journal Bearing	70
9	Cross-Coupled Stiffnesses vs. Sommerfeld Number for Plain Journal Bearing	71
10	Principal Damping vs. Sommerfeld Number for Plain Journal Bearing	72
11	Cross-Coupled Damping vs. Sommerfeld Number for Plain Journal Bearing	73
12	Stability Threshold vs. Sommerfeld Number for Plain Journal Bearing	74
13	Principal Stiffnesses vs. Sommerfeld Number for Plain Journal Bearing	76
14	Cross-Coupled Stiffnesses vs. Sommerfeld Number for Plain Journal Bearing	77
15	Principal Damping vs. Sommerfeld Number for Plain Journal Bearing	78
16	Cross-Coupled Damping vs. Sommerfeld Number for Plain Journal Bearing	79
17	Stability Threshold for Plain Journal Bearing	80

LIST OF TABLES

Table		Page
1	Plain Journal Bearing Dimensionless Characteristics	20
2	Two Lobe Bearing Dimensionless Characteristics $L/D = 0.5$, $m = 0.0$, $\chi = 160^{\circ}$, Load on Pad	21
3	Two Lobe Bearing Dimensionless Characteristics $L/D = 0.5$, $m = 0.25$, $\chi = 160^{\circ}$, Load on Pad	22
4	Two Lobe Bearing Dimensionless Characteristics $L/D = 0.5$, $m = 0.5$, $\chi = 160^{\circ}$, Load on Pad	23
5	Three Lobe Bearing Dimensionless Characteristics $L/D = 0.5$, $m = 0.0$, $\chi = 100^{\circ}$, Load Between Pads	24
6	Three Lobe Bearing Dimensionless Characteristics $L/D = 0.5$, $m = 0.250$, $\chi = 100^{\circ}$, Load Between Pads	25
7	Three Lobe Bearing Dimensionless Characteristics $L/D = 0.5$, $m = 0.50$, $\chi = 100^{\circ}$, Load Between Pads	26
8	Dynamic Data of Fixed Pad ($L/D = 0.25$, Offset = .500, $\chi = 80^{\circ}$, Load on Pad Center)	28
9	Static Data of Fixed Pad ($L/D = 0.25$, Offset = .500, $\chi = 80^{\circ}$, Load on Pad Center)	29
10	Four Shoe Tilting Pad Bearing ($L/D = 0.25$, $m = 0$, Offset = .500, $\chi = 80^{\circ}$, Load Between Pads) Dimensionless Synchronous Dynamic Data	30
11	Four Shoe Tilting Pad Bearing ($L/D = 0.25$, Offset = 500, $m = 0.2$, $\chi = 80^{\circ}$, Load Between Pads) Dimensionless Synchronous Dynamic Data	31
12	Four Shoe Tilting Pad Bearing ($L/D = 0.25$, Offset = .500, $m = 0.3$, $\chi = 80^{\circ}$, Load Between Pads) Dimensionless Synchronous Dynamic Data	32
13	Four Shoe Tilting Pad Bearing ($L/D = 0.25$, Offset = .500, $m = 0.5$, $\chi = 80^{\circ}$, Load Between Pads) Dimensionless Synchronous Dynamic Data	33

LIST OF TABLES

(Continued)

		Page
14	Dynamic Data of Fixed Pad (L/D = 0.50, Offset = .500, $\chi = 80^{\circ}$ Load on Pad Center)	34
15	Static Data of Fixed Pad (L/D = 0.5, Offset = .500, $\chi = 80^{\circ}$, Load on Pad Center)	35
16	Four Shoe Tilting Pad Bearing (L/D = 0.5, Offset = .500, m = 0.0, $\chi = 80^{\circ}$, Load Between Pads) Dimensionless Synchronous Dynamic Data	36
17	Four Shoe Tilting Pad Bearing (L/D = 0.5, Offset = .500, m = 0.2, $\chi = 80^{\circ}$, Load Between Pads) Dimensionless Synchronous Dynamic Data	37
18	Four Shoe Tilting Pad Bearing (L/D = 0.5, Offset = .500, m = 0.3, $\chi = 80^{\circ}$, Load Between Pads) Dimensionless Synchronous Dynamic Data	38
19	Four Shoe Tilting Pad Bearing (L/D = 0.5, Offset = .500, m = 0.5, $\chi = 80^{\circ}$, Load Between Pads) Dimensionless Synchronous Dynamic Data	39
20	Dynamic Data of Fixed Pad (L/D = 1.00, Offset = .500, $\chi = 80^{\circ}$, Load on Pad Center)	40
21	Static Data of Fixed Pad (L/D = 1.0, Offset = .500, $\chi = 80^{\circ}$, Load on Pad Center)	41
22	Four Shoe Tilting Pad Bearing (L/D = 1.0, Offset = .500, m = 0.0, $\chi = 80^{\circ}$, Load Between Pads) Dimensionless Synchronous Dynamic Data	42
23	Four Shoe Tilting Pad Bearing (L/D = 1.0, Offset = .500, m = 0.2, $\chi = 80^{\circ}$, Load Between Pads) Dimensionless Synchronous Dynamic Data	43
24	Four Shoe Tilting Pad Bearing (L/D = 1.0, Offset = .500, m = 0.3, $\chi = 80^{\circ}$, Load Between Pads) Dimensionless Synchronous Dynamic Data	44
25	Four Shoe Tilting Pad Bearing (L/D = 1.0, Offset = .500, m = 0.5, $\chi = 80^{\circ}$, Load Between Pads) Dimensionless Synchronous Dynamic Data	45

LIST OF TABLES

(Continued)

		Page
26	Dynamic Data of Fixed Pad (L/D = 0.25, Offset = .500, $\chi = 55^{o}$, Load on Pad Center)	46
27	Static Data of Fixed Pad (L/D = 0.25, Offset = .500, $\chi = 55^{o}$, Load on Pad Center)	47
28	Five Shoe Tilting Pad Bearing (L/D = 0.25, Offset = .500, m = 0.0, $\chi = 55^{o}$, Load on Pad) Dimensionless Synchronous Dynamic Data	48
29	Five Shoe Tilting Pad Bearing (L/D = 0.25, Offset = .500, m = 0.200, $\chi = 55^{o}$, Load on Pad) Dimensionless Synchronous Dynamic Data	49
30	Five Shoe Tilting Pad Bearing (L/D = .25, Offset = .500, m = 0.300, $\chi = 55^{o}$, Load on Pad) Dimensionless Synchronous Dynamic Data	50
31	Five Shoe Tilting Pad Bearing (L/D = 0.25, Offset = .500, m = 0.50, $\chi = 55^{o}$, Load on Pad) Dimensionless Synchronous Dynamic Data	51
32	Dynamic Data of Fixed Pad (L/D = .50, Offset = .500, $\chi = 55^{o}$, Load on Pad Center)	52
33	Static Data of Fixed Pad (L/D = 0.5, Offset = .500, $\chi = 55^{o}$, Load on Pad Center)	53
34	Five Shoe Tilting Pad Bearing (L/D = 0.5, m = 0.0, $\chi = 55^{o}$, Load on Pad) Dimensionless Synchronous Dynamic Data	54
35	Five Shoe Tilting Pad Bearing (L/D = 0.5, Offset = .500, m = 0.2, $\chi = 55^{o}$, Load on Pad) Dimensionless Synchronous Dynamic Data	55
36	Five Shoe Tilting Pad Bearing (L/D = 0.5, Offset = .500, m = 0.3, $\chi=55^{o}$, Load on Pad) Dimensionless Synchronous Dynamic Data	56
37	Five Shoe Tilting Pad Bearing (L/D = 0.50, Offset = .500, m = 0.5, $\chi = 55^{o}$, Load on Pad) Dimensionless Synchronous Dynamic Data	57

LIST OF TABLES

(Continued)

		Page
38	Dynamic Data of Fixed Pad (L/D = 1.00, Offset = .500, $\chi = 55^{o}$, Load on Pad Center)	58
39	Static Data of Fixed Pad (L/D = 1.0, Offset = .500, $\chi = 55^{o}$, Load on Pad Center)	59
40	Five Shoe Tilting Pad Bearing (L/D = 1.0, Offset = .500, m = 0.0, $\chi = 55^{o}$, Load on Pad) Dimensionless Synchronous Dynamic Data	60
41	Five Shoe Tilting Pad Bearing (L/D = 1.0, Offset = .500, m = 0.2, $\chi = 55^{o}$, Load on Pad) Dimensionless Synchronous Dynamic Data	61
42	Five Shoe Tilting Pad Bearing (L/D = 1.0, Offset = .500, m = 0.3, $\chi = 55^{o}$, Load on Pad) Dimensionless Synchronous Dynamic Data	62
43	Five Shoe Tilting Pad Bearing (L/D = 1.0, Offset = .500, m = 0.5, $\chi = 55^{o}$, Load on Pad) Dimensionless Synchronous Dynamic Data	63
INDEX FOR TILTING PAD BEARING DATA TABLES		27

LIST OF SYMBOLS

A. Dimensional Quantities

Symbol	Definition	Units
B	Damping coefficient	lb-sec/in
C	Clearance (nominal or bearing radial clearance for plain journal; pad or ground in radial clearance for multilobe and tilting pad bearings)	in
C_b	Bearing clearance (radial clearance of largest cylinder that will fit in bearing, preload $m = (C - C_b)/C$)	in
D	Diameter of shaft	in
e	Eccentricity	in
e_b	Bearing eccentricity	in
h	Bearing film thickness	in
h_p	Pivot film thickness	in
H_p	Horsepower loss	hp
K	Stiffness	lb/in
L	Length of bearing	in
M	Mass of the rigid rotor	lb-sec^2/in
N	Rotational speed of shaft	rev/min
N_s	Rotational speed of shaft	rev/sec
P	Pressure	lbf/in
Q_{req}	Inlet oil flow to bearing (sum of inlet oil flows to all pads in multilobe and tilting pad bearings)	in^3/sec
Q_{lost}	Lost oil flow from bearing (sum of axial oil flows of all pads in multilobe and tilting pad bearings)	in^3/sec
r_p	Radius of preload circle, $r_p = C - C_b$	in
R	Journal radius	
R_p	Pad radius of curvature	in

LIST OF SYMBOLS

(Continued)

R_v	Radius from bearing center to pivot	in
t	Time	sec
T	Friction torque	lbf-in
W	Load on bearing (vertically downward steady state load)	lbf.
x, y	Coordinate system for bearing	in
z	Axial coordinate	in
η, ξ	Fixed pad coordinate system	degrees
δ	Pitch angle of pad	degrees
θ	Angular coordinate (from Y-axis)	degrees
θ_p	Angle from leading edge of pad to pad pivot	degrees
χ	Pad arc length	degrees
ϕ ϕ_i	Angle from positive y-axis, i^{th} pad pivot point measured in direction of rotation measured from positive y-axis	degrees
ω	Rotational speed	rad/sec
μ	Average viscosity	lbf-sec/in^2
ψ	Attitude angle measured with rotation from the static load vector (positive x-axis) to the eccentricity vector	degrees

B. Dimensionless Quantities

Symbol	
$\bar{B}$	$Bc\omega/WS$, dimensionless damping coefficient
$\bar{h}_p$, $\bar{h}_{pi}$	h_p/C_p, dimensionless pivot film thickness, pivot film thickness for i^{th} pad
$\bar{K}$	Kc/WS, dimensionless stiffness coefficient
$\bar{M}$	$4\pi^2MC^3N_s/\mu R^2LD$, critical mass parameter
m	$1 - (C_b/C)$, bearing preload factor
n_p	Number of pads

LIST OF SYMBOLS

(Continued)

p	$\dfrac{\bar{K}_{\eta\eta}}{\bar{K}^2_{\eta\eta} + \bar{B}^2_{\eta\eta}}$
q	$\dfrac{\bar{C}}{\bar{K}^2_{\eta\eta} + \bar{B}^2_{\eta\eta}}$
$\bar{Q}$	$Q/N_s LDc$, dimensionless oil flow parameter
S	$\mu NLD(R/c)^2/(60W)$, Sommerfeld number
$\bar{T}$	$H_p(4)(12)(550)c/2\pi N_s{}^2 \mu LD^3)$
$\bar{W}_x$, $\bar{W}_y$	Dimensionless horizontal, vertical hydrodynamic load
$\bar{W}_{x_i}$, $\bar{W}_{y_i}$	Dimensionless horizontal, vertical hydrodynamic load for the ith pad
α	θ_p/χ, bearing offset factor
ε	e_b/C, eccentricity ratio
ε_b	e_b/C_b, eccentricity ratio

SECTION I

INTRODUCTION

This work is intended to supplement and in some cases supersede the report entitled "Rotor-Bearing Dynamics Design Technology, Part III: Design Handbook for Fluid Film Type Bearings," Technical Report AFAPL-TR-65-45, Part III, May 1965. This report discussed static and dynamic properties of plain cylindrical bearings, four axial groove bearings, elliptical bearings, partial arc bearings, and tilting pad bearings. This report was followed by another entitled "Rotor-Bearing Dynamics Design Technology, Part VII: The Three-Lobe Bearing and Floating Ring Bearings," Technical Report AFAPL-TR-65-45, Part VII, February 1968. As indicated by the title, this report extended the 1965 report by including three-lobe journal bearings and floating ring bearings.

The subject of the present study is to augment the bearing data given in the two previous reports by including a significant amount of additional multilobe bearing data, including several preload values. Preload values of 0.0 (a three-axial groove bearing) and 0.25 are considered in addition to the previously considered values of 0.5. The present report also supersedes the bearing data in the previous report AFAPL-TR-65-45, Part III for the tilting pad data. Apparently some inaccuracies were present in the pad assembly computer program utilized to calculate the data for the original curves. This report presents a wide variety of tilting pad static and dynamic properties for calculational use.

Comparisons of the data in this volume and a number of published works gives good correlation for cases where identical bearings have been considered by different authors. Generally, the errors are on the order of magnitude of 10% or less. There will always be minor differences from one set of numerical calculation to another due to the numerical technique used (finite

elements versus finite differences, the iteration procedure used to find equilibrium position, etc.) such that errors of the 5 to 10% order of magnitude are reasonable. It has also been found by many authors that the correlation of theoretical with experimental results is usually much worse than the 5 to 10% range. Thus, errors of the 5 to 10% range are not critical.

The data given in this report includes the equilibrium position, bearing coefficients, horsepower loss, and oil flow of the following bearing types:

- plain journal
- multilobe
- tilting pad

A finite element solution of the Reynolds equation is used to obtain the pressure over the finite bearing surface. Pressures that are lower than the cavitation pressure are set equal to the cavitation pressure. The effects of fluid streamers forming in the cavitation region are included. The lubricant is assumed to be isoviscous and laminar. The pressure is then integrated over the bearing to obtain the load capacity. For a given load the equilibrium eccentricity, and attitude angle are determined by the Newton Raphson iterative procedure. Linear stiffness and damping coefficients are obtained from small perturbations of displacement and velocity about the equilibrium position. The effects of misalignment of the shaft in the bearing are not considered.

SECTION II

LUBRICATION THEORY

The coordinate system (fixed in space) adopted in this report is shown in Fig. 1. Face the bearing each time so that the shaft rotates counterclockwise. The angular coordinate, θ, is measured positive in the counterclockwise direction starting always from the positive y-axis. x and y are the vertical and horizontal coordinates of the geometrical center of the shaft (centerline).

The form of the Reynolds equation solved is

$$\frac{1}{R^2}\frac{\partial}{\partial\theta}\left(h^3\frac{\partial P}{\partial\theta}\right)+\frac{\partial P}{\partial z}\left(h^3\frac{\partial P}{\partial z}\right)=6\mu\omega\frac{\partial h}{\partial\theta}+12\mu\frac{\partial h}{\partial t} \qquad (1)$$

All of the standard Reynolds equation assumptions hold.

1. The average clearance is small compared to the length in either the x or z directions.
2. Only laminar flow occurs in the bearing. The Reynolds number is less than 2,000.
3. No-slip boundary conditions apply at fluid-solid interfaces.
4. All body or other external forces are neglected in the fluid film.
5. The fluid is Newtonian, incompressible, and isoviscous.

The boundary condition used is the half Sommerfeld condition. Pressures below the cavitation pressure, (zero psi) are set equal to the cavitation pressure and it is assumed that fluid streamers form in the cavitated region (See Fig. 2). The determination of which areas of the bearing are cavitated is determined element by element.

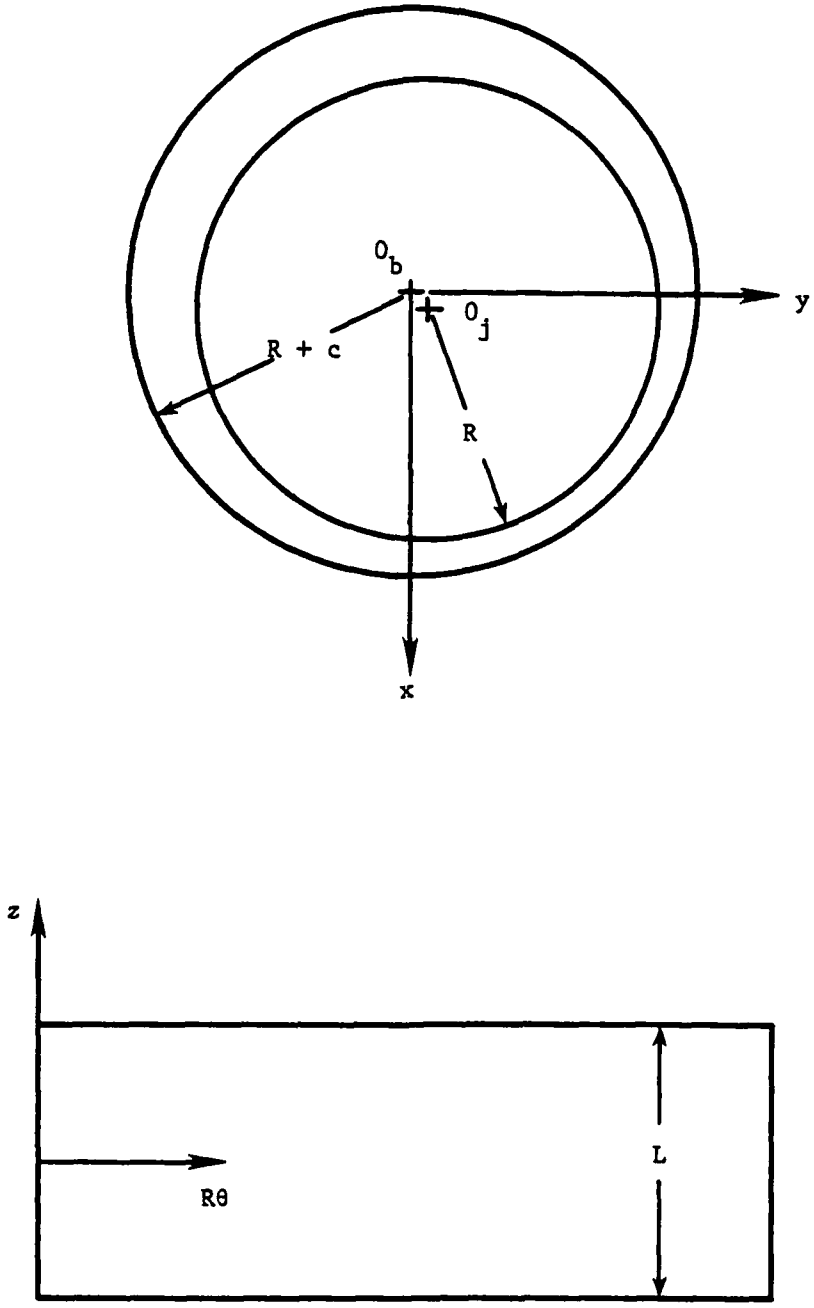

Figure 1 Bearing Coordinate System

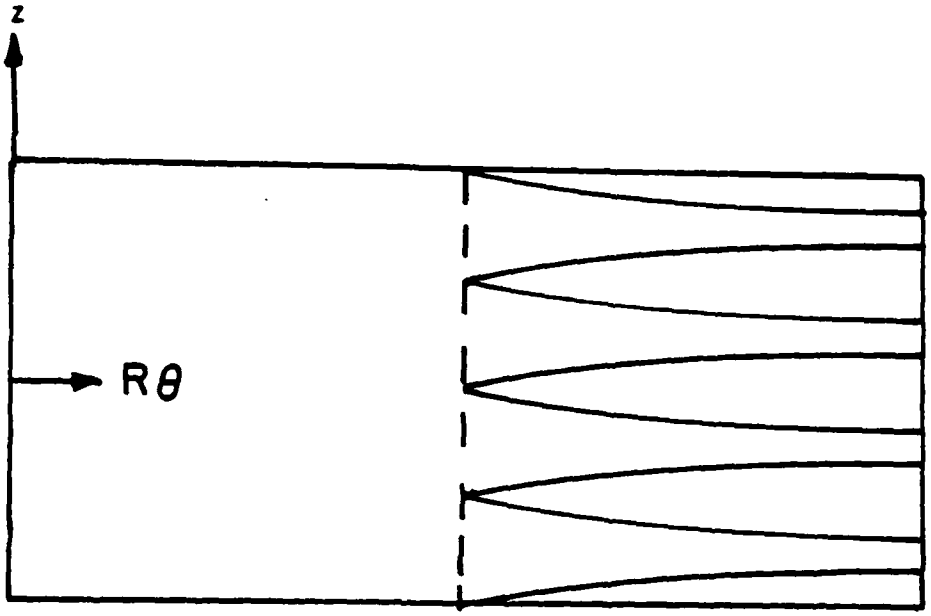

Streamers in Cavitated Region (Top View).

Figure 2 Boundary Conditions for Plain Journal Bearing

Symmetry in the z-direction is assumed and the bearing split in half along its length (along $z = 0$) as shown in Fig. 3. Then, the hydrodynamic pressures are solved for only half of the bearing, saving computer time.

For a plain journal bearing, the bearing is split at the point of maximum film thickness. The hydrodynamic pressure is assumed zero at h_{max}. According to Pinkus and Sternlicht, a full journal bearing is not very sensitive as to where the hydrodynamic pressure is assumed zero as long as it is near h_{max}. They state that even shifts of the order of 20° introduce little error. They observe that the performance of a 180° bearing is seen to differ little from a full 360° bearing. A full discussion of the boundary conditions is given in Section 5.

For pad bearings, the hydrodynamic pressure is again assumed zero at $z = \pm L/2$. Symmetry in the z-direction is also assumed and the hydrodynamic pressure is assumed zero at both ends of the arc.

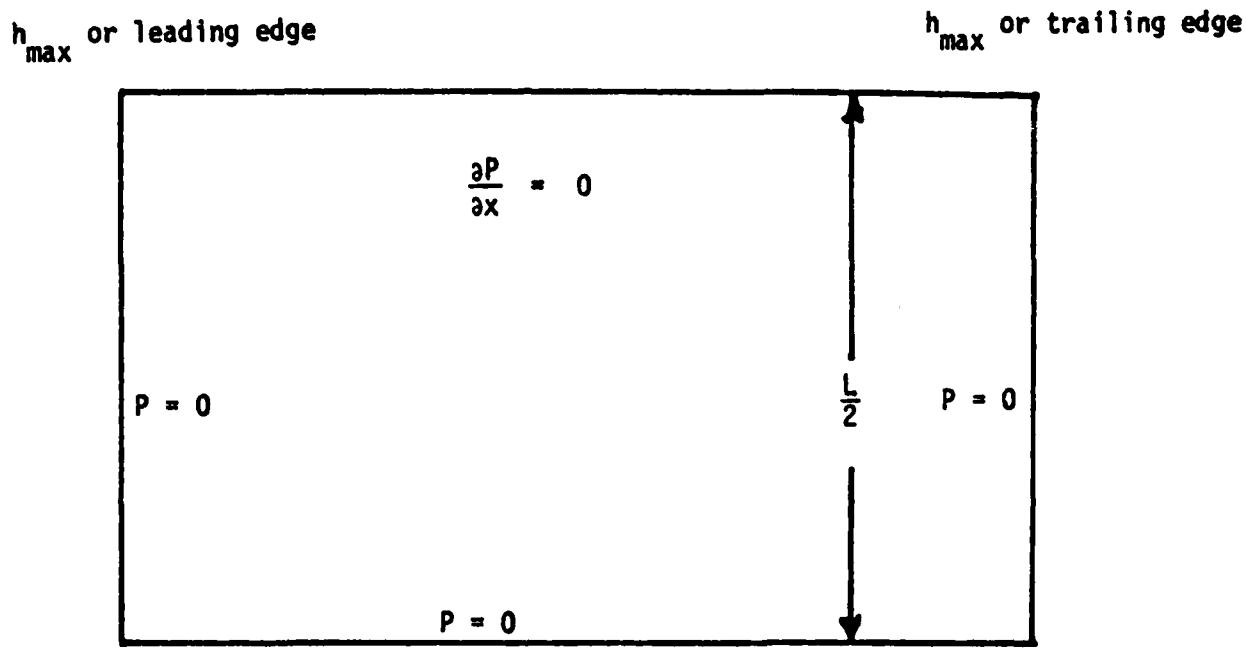

Figure 3 Boundary Conditions

SECTION III

BEARING TYPES

Fluid films are found in many rotating machines either as bearings, seals, or squeeze film dampers. Certain standard geometries such as those discussed here have evolved to satisfy various requirements. Because bearings or seals are much more easily changed than other rotor parts, clearances, preload factors, or bearing types are often varied as vibration problems occur. It is desirable to be able to analyze the effects of those parameters of all of these bearing types.

3.1 Plain Journal Bearing

As shown in Fig. 4, the plain journal bearing is composed of a cylindrical shaft of radius R, called a journal, rotating with angular velocity, ω, counterclockwise about its axis in a cylindrical bushing of radius R + C and length L. The center of the journal is labeled O_j, and the center of the bushing is labeled O_b as shown in Fig. 4. If the bearing is operating under steady state conditions, the journal center remains at a constant eccentricity e and attitude angle ψ for a given load W acting on the shaft. The case of the plain journal bearing is an important one because this geometry is the same as that in a plain seal and also in a squeeze film damper (where $\omega = 0$). For this reason the analysis remains important although the use of plain journal bearings is declining due to stability problems.

3.2 Multilobe Bearing

The multilobe bearing is different from the plain journal bearing in that the pad of radius, R + C, has the center of curvature, O_p, located a small distance r_p from the bushing center. The preload factor m equals

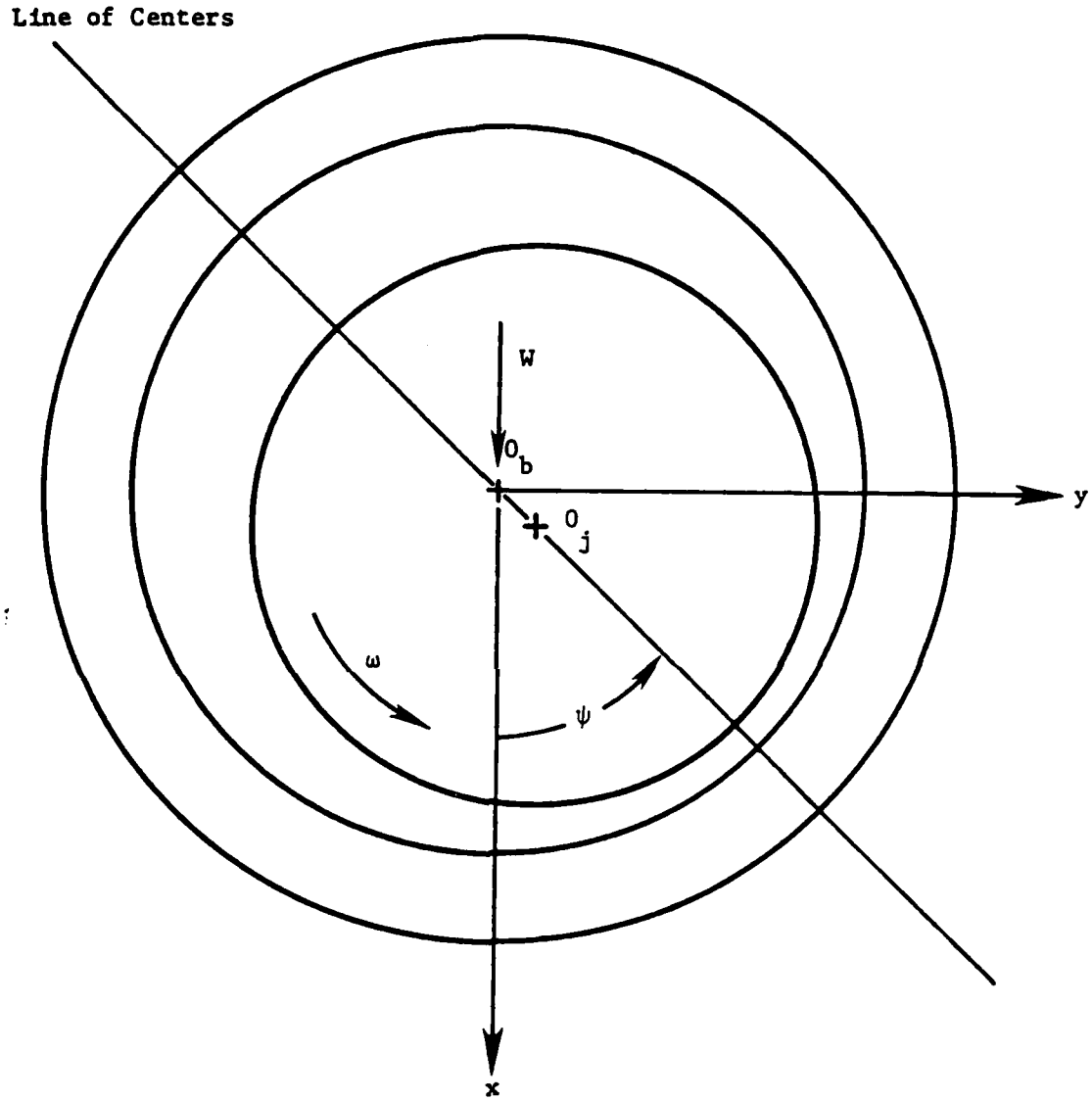

Figure 4 Plain Journal Bearing

r_p/C. Extending the line O_pO_b to the pad surface at point P gives the location of minimum film thickness C_b. This corresponds to the maximum shaft radius $R + C_b$ which will fit in the bearing. The point P also determines the end of the converging portion of the pad and the offset factor $\bar{\alpha} = \alpha/\chi$. Both the preload factor and the offset factor have values between zero and one. The offset factor is often chosen as one-half to permit running in both directions. Fig. 5 shows the geometry.

Multilobe bearings offer the user an increase in stability in some situations by the increased pad convergence loading up the bearing. Because of the many possible combinations of number of pads, rotation of bearing, clearance, preload factor, and offset factor, a large range of load carrying capacity and bearing coefficients is possible.

A special case occurs when the preload is zero. This is often called an axial groove bearing as it may be constructed by cutting axial grooves in a plain journal bearing. It is often used as an inexpensive replacement for plain journal bearings in an attempt to reduce instability problems in a machine.

3.3 Tilting Pad Bearing

The tilting pad bearing shown in Fig. 6, differs from the multilobe bearing in that each pad is pivoted behind point P. Three or more pads are usually used. Each pad may have as many as four degrees of freedom corresponding to movement of the pivot point in or out due to a spring loading and three rotations. Of the three rotations, only pitch in the x,y plane is considered here while roll and yaw are neglected. This corresponds to assuming that the shoe follows the shaft as it precesses. In oil film bearings this approximation is usually a good one due to the high damping properties. The approximation is not valid for gas bearings as pad inertia is important.

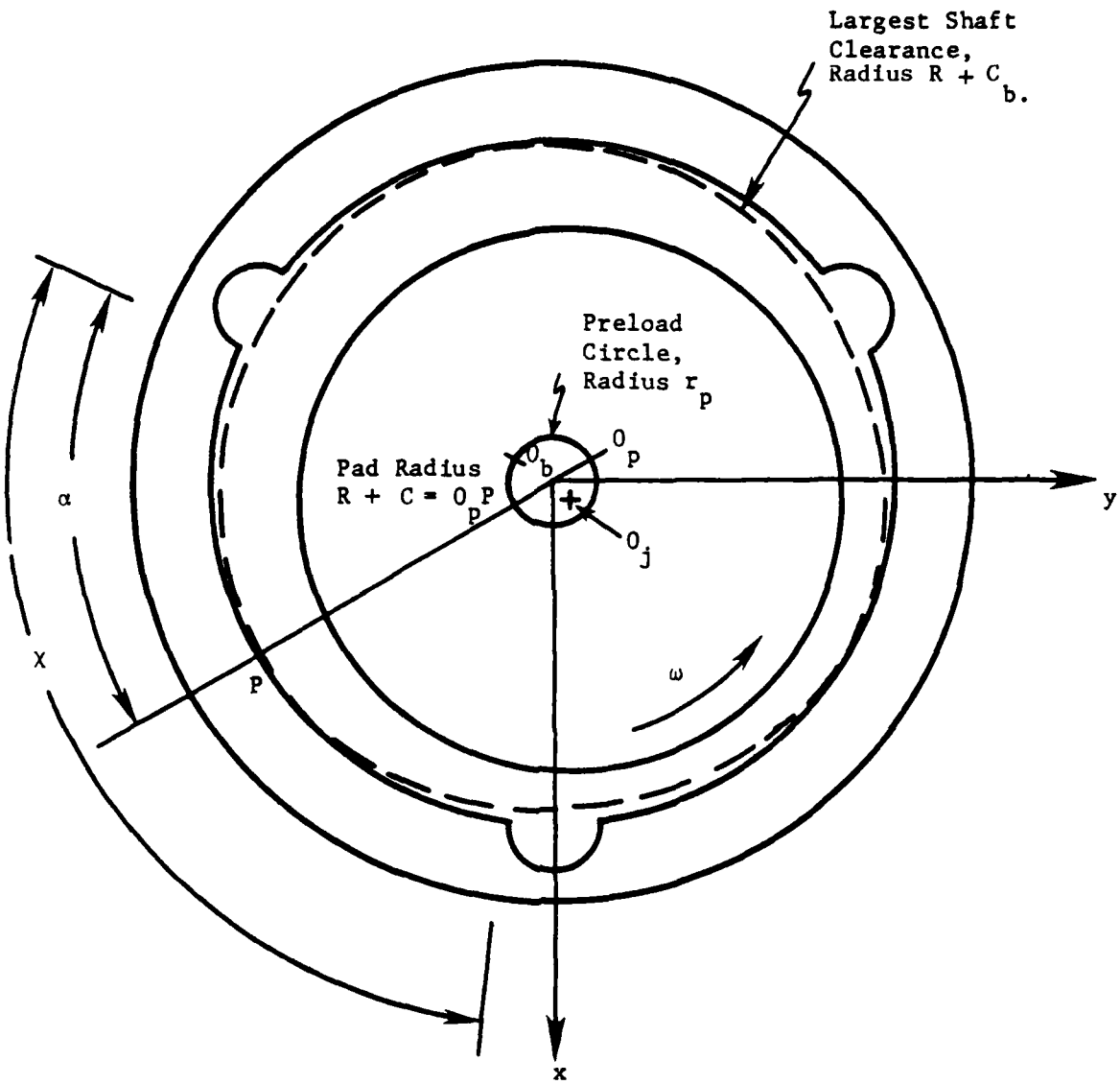

Figure 5 Multilobe Bearing Geometry

R_υ = RADIUS TO PIVOT

R_p = PAD RADIUS OF CURVATURE

$R_\upsilon = R_p$ WHEN $m_b = 0.0$

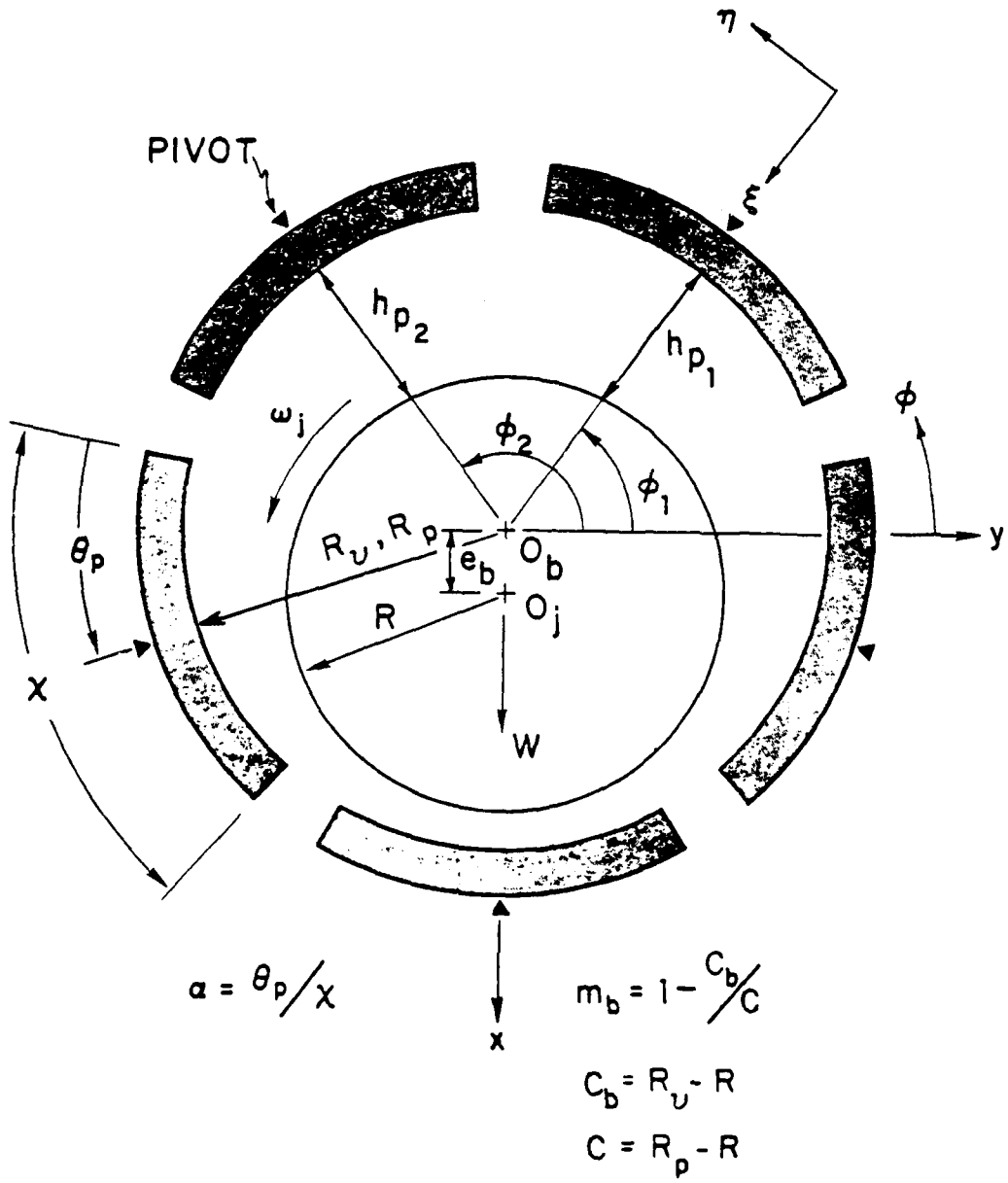

$\alpha = \theta_p / X$

$m_b = 1 - C_b / C$

$C_b = R_\upsilon - R$

$C = R_p - R$

FIGURE 6 TILT PAD BEARING SCHEMATIC

Tilting pad bearings are often used because they are more stable than other types of bearings. Because the pads are able to follow the shaft motion, there is little cross-coupled stiffness and damping which is what drives fixed pad bearings unstable above certain speeds. The hydrodynamic load vector developed by each pad under steady state operating conditions must pass through the line between the pivot point and the journal center O_b.

For liquid lubricated bearings, the pad inertia may be neglected [Lund, 1964]. With symmetry about the x-axis, the stiffness and damping coefficients for the full tilt pad bearing in dimensionless form are [Lund, 1964]

$$\bar{K}_{yy} = \sum_{i=1}^{n_p} (\bar{K}'_{\xi\xi}\cos^2\phi)_i \tag{2}$$

$$\bar{K}_{xx} = \sum_{i=1}^{n_p} (\bar{K}'_{\xi\xi}\sin^2\phi)_i \tag{3}$$

$$\bar{B}_{yy} = \sum_{i=1}^{n_p} (\bar{B}'_{\xi\xi}\cos^2\phi)_i \tag{4}$$

$$\bar{B}_{xx} = \sum_{i=1}^{n_p} (\bar{B}'_{\xi\xi}\sin^2\phi)_i \tag{5}$$

$$\bar{K}_{xy} = \bar{K}_{yx} = \bar{B}_{xy} = \bar{B}_{yx} = 0 \tag{6}$$

where n_p = number of pads

ϕ_i = angle from positive y-axis measured counterclockwise to the pivot point of the ith pad (Fig. 6)

and

$$\bar{K}'_{\xi\xi} = \bar{K}_{\xi\xi} - (p\bar{K}_{\xi\eta} + q\bar{B}_{\xi\eta})\,\bar{K}_{\eta\xi} - (q\bar{K}_{\xi\eta} - p\bar{B}_{\xi\eta})\,\bar{B}_{\eta\xi} \tag{7}$$

$$\bar{B}'_{\xi\xi} = \bar{B}_{\xi\xi} - (p\bar{K}_{\xi\eta} + q\bar{B}_{\xi\eta})\,\bar{B}_{\eta\xi} + (q\bar{K}_{\xi\eta} - p\bar{B}_{\xi\eta})\,\bar{K}_{\eta\xi} \tag{8}$$

with

$$p = \frac{\bar{K}_{\eta\eta}}{\bar{K}^2_{\eta\eta} + \bar{B}^2_{\eta\eta}} \tag{9}$$

$$q = \frac{\bar{B}_{\eta\eta}}{\bar{K}^2_{\eta\eta} + \bar{B}^2_{\eta\eta}} \tag{10}$$

The first subscript in the K and B terms refers to the force direction while the second refers to the direction of displacement or velocity perturbation. The quantities on the right-hand side of Eqs. (7) through (10) ($\bar{K}_{\xi\xi}$, $\bar{K}_{\xi\eta}$, $\bar{K}_{\eta\xi}$, $\bar{K}_{\eta\eta}$, $\bar{B}_{\xi\xi}$, $\bar{B}_{\xi\eta}$, $\bar{B}_{\eta\xi}$, $\bar{B}_{\eta\eta}$)* are the dimensionless fixed pad coefficients. These coefficients are calculated by loading up a single fixed pad, obtaining an equilibrium position and perturbating about the equilibrium position to determine the fixed pad coefficients (see Fig. 7). Then the pads dynamic coefficients, $\bar{K}'_{\xi\xi}$ and $\bar{B}'_{\xi\xi}$, are calculated using Eqs. (7) through (10). The other 6 dynamic coefficients are zero because pad inertia is neglected. These 2 dynamic coefficients along with the fixed pad Sommerfeld number S are stored as a function of the pads dimensionless pivot film thickness, $\bar{h}_p$ where

$$\bar{h}_p = h_p/C$$

and

C_p = pad radial clearance

h_p = pivot film thickness

---

*Each $\bar{B}$ coefficient appearing within parentheses on the right-hand sides of Eqs. (7) and (8) and in Eqs. (9) and (10) should be multiplied by the frequency ratio ν/ω for nonsynchronous vibrations.

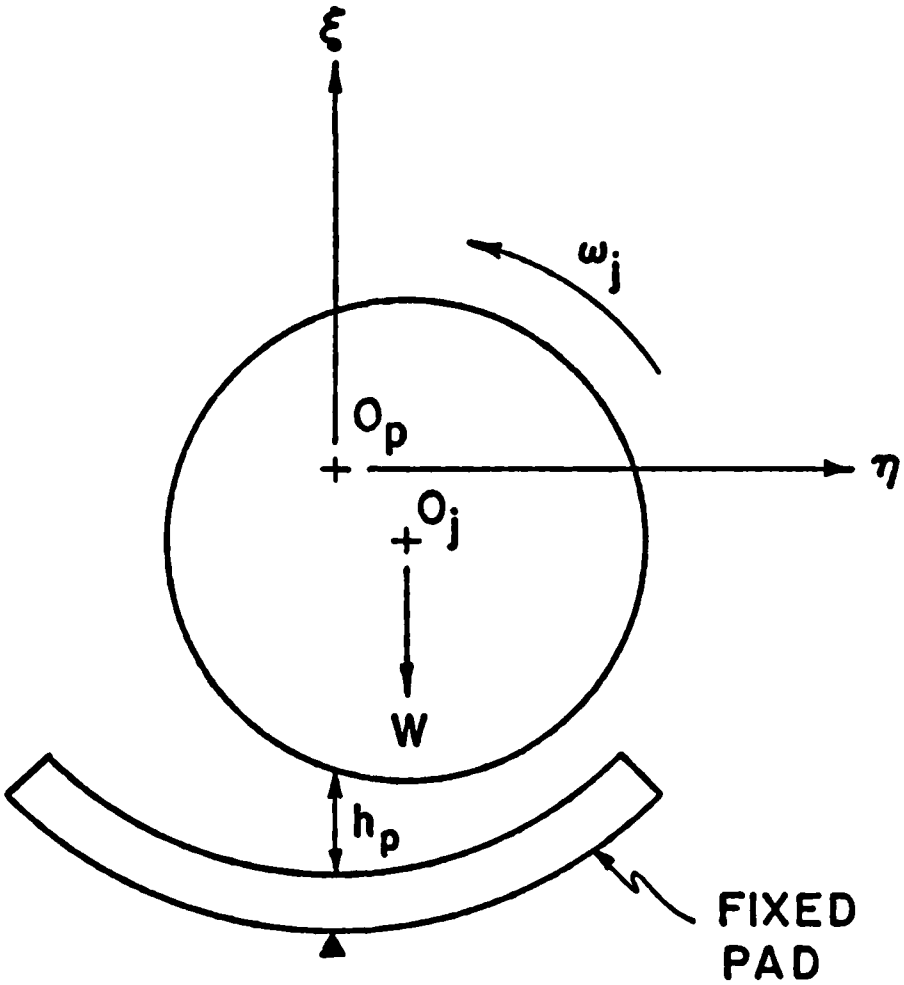

Figure 7 Single Pad Schematic

To determine the bearing characteristics of the full tilt pad bearing, a bearing eccentricity ratio, ε_b is chosen where

$$\varepsilon_b = \frac{e_b}{C_b} \tag{11}$$

and

C_b = tilt pad bearing assembled radial clearance in line with a pivot

e_b = tilt pad bearing eccentricity (Fig. 6)

The bearing clearance C_b, can be defined by the largest shaft (shaft radius = $R + C_b$) which can be placed in the bearing after it is assembled. For a bearing with zero preload, the shaft with radius $R + C_b$ would be in contact with the pad at all points. For a bearing with nonzero preload, shaft-pad contact will occur only along the pivot line.

Secondly, the dimensionless pivot film thickness is calculated for the ith pad, $\bar{h}_{p_i}$. Next $\bar{K}'_{\xi\xi i}$, $\bar{B}'_{\xi\xi i}$ and S_i are determined for the corresponding $\bar{h}_{p_i}$ value using a 4 point Lagrangian interpolation. This is repeated for each pad. Eqs. (2) through (5) are then used to determine the dimensionless stiffness and damping coefficients for the full tilt pad bearing. Now, the dimensionless load must be calculated for each pad

$$\bar{W}_{yi} = S_i^{-1} \cos \phi_i \tag{12}$$

$$\bar{W}_{xi} = -S_i^{-1} \sin \phi_i \tag{13}$$

where

S_i = Sommerfeld number for i^{th} pad

For the full bearing

$$\bar{W}_y = \sum_{i=1}^{n_p} \bar{W}_{y_i} \tag{14}$$

$$\bar{W}_x = \sum_{i=1}^{n_p} \bar{W}_{x_i} \tag{15}$$

The Sommerfeld number for the assembled tilt pad bearing is

$$S = \bar{W}_x^{-1} \tag{16}$$

and

$$\bar{W}_y = 0$$

The top pads of a zero preloaded tilt pad bearing have dimensionless pivot film thicknesses, $\bar{h}_{p_i}$, greater than 1.0 for the case of a horizontal shaft with a downward load. However, these pads still contribute to the bearing damping. That is, even if $\bar{h}_{p_i} > 1.0$, $\bar{B}_{\xi\xi_i}$ is nonzero and positive and contributes to $\bar{B}_{yy}$ and $\bar{B}_{xx}$ in Eqs. (4) and (5). On the other hand, $\bar{K}'_{\xi\xi_i}$ approaches zero as $\bar{h}_{p_i}$ approaches 1.0. Thus, it is set to zero for $\bar{h}_{p_i} \geq 1.0$.

The assumption of symmetry about the x-axis holds for all load on pad (load on pivot) and load between pad (load between pivot) bearings. Also, the transformation from fixed pad data to dynamic pad data, Eqs. (7) through (10), may be viewed as an adjustment in the fixed pad data to allow the pad to pitch so that the load, W will pass through the pivot point.

SECTION IV

BEARING DATA

Bearing data has been calculated for plain journal, multilobe, and tilting pad bearings. The data includes the following:

a) Eccentricity, ε

$$\varepsilon = \frac{e}{C} \quad \text{(plain journal)}$$

$$\varepsilon_b = \frac{e_b}{C_b} \quad \text{(multilobe and tilt pad)}$$

b) Attitude angle, ψ

c) Sommerfeld number, S

$$S = \frac{\mu NLD}{60W}\left(\frac{R}{C}\right)^2$$

d) Torque, $\bar{T}$

$$\bar{T} = H_p \frac{4(12)(550)C}{2\pi N_s^2 \mu LD^3}$$

e) Oil flow, Q_{req}, Q_{lost}

$$\bar{Q} = \frac{Q}{N_s LDC}$$

(Q_{req} = Inlet flow to bearing

Q_{lost} = Axial flow lost to side of bearing)

f) Stiffness, $\bar{K}_{xx}$, $\bar{K}_{xy}$, $\bar{K}_{yx}$, $\bar{K}_{yy}$

$$\bar{K} = K\frac{C}{WS}$$

g) Damping, $\overline{B}_{xx}$, $\overline{B}_{xy}$, $\overline{B}_{yx}$, $\overline{B}_{yy}$

$$\overline{B} = B \frac{C\omega}{WS}$$

4.1 Plain Journal Bearings

A plain journal bearing with L/D = 0.5 is considered in this section. The dimensionless characteristics are given in Table 1.

The value L/D = 0.5 is very common for journal bearings. Usually the range is from L/D = 0.4 to L/D 0.75 with not much variation within this range. Thus L/D = 0.5 represents most of the bearings in common use.

4.2 Multilobe Bearings

Multilobe bearings with L/D = 0.5 are presented in Tables 2 through 7. Both two-lobe and three-lobe bearings with preloads of 0.0, 0.25, 0.50 are evaluated. For the two-lobe bearing, the pad arc length is 160° and the load vector is through the center of the bottom pad. In the three-lobe case, the pad arc length is 100° and the bearing is rotated so that the load vector is directed between pads. Thus large loads are taken by two pads rather than just one. In all cases with non-zero preload, the offset factor (location of minimum film thickness, if the shaft is centered, expressed as a fraction of pad arc length) is 0.50.

4.3 Tilting Pad Bearings

Two tilting pad bearing cases are evaluated: four-pad with the load between the pads and five-pad with the load on the bottom pad. In each case, the L/D ratios are 0.25, 0.50, 1.00 and the preloads are 0.0, 0.2, 0.3, 0.5. In all cases the pads are centrally pivoted. Page 27 contains an index for various data tables of tilting pad bearings.

TABLE 1

PLAIN JOURNAL BEARING DIMENSIONLESS CHARACTERISTICS
(L/D = 0.5)

ECC	PSI	S	T	QREQ	QLDS	KYY	KYX	KXY	KXX	BYY	BYX	BXY	BXX
.104	83.73	4.3000	18.92	1.72	.298	.50	-2.20	2.31	.25	3.82	.42	.76	4.58
.206	77.37	2.0480	18.50	1.86	.590	1.04	-2.20	2.69	.60	4.17	.94	1.39	5.17
.308	70.93	1.2350	18.42	2.01	.885	1.70	-2.19	3.41	1.18	4.67	1.62	2.23	6.32
.403	64.92	.8249	18.68	2.14	1.157	2.50	-2.15	4.56	2.14	5.33	2.50	3.35	8.21
.524	57.10	.4969	19.61	2.31	1.506	4.04	-1.97	7.34	4.75	6.64	4.31	5.69	12.83
.598	52.13	.3556	20.64	2.41	1.722	5.54	-1.66	10.51	8.17	7.90	6.15	8.12	18.23
.708	44.25	.1991	23.34	2.56	2.047	9.64	-.27	20.60	21.15	11.13	11.43	15.18	35.89
.747	41.29	.1564	24.84	2.61	2.162	12.18	.91	27.61	31.45	12.99	14.81	19.73	48.37
.801	36.93	.1067	27.75	2.68	2.322	17.75	4.13	44.44	59.12	16.79	22.35	29.96	78.79
.819	35.36	.0920	29.07	2.71	2.376	20.57	6.04	53.58	75.50	18.59	26.21	35.21	95.46
.858	31.75	.0640	32.82	2.76	2.493	29.63	13.25	85.28	137.80	23.98	38.77	52.34	153.70
.869	30.65	.0569	34.22	2.77	2.527	33.40	16.66	99.35	167.70	26.08	44.03	59.52	179.80
.906	26.56	.0356	40.80	2.82	2.641	54.17	38.89	184.30	368.70	36.58	73.18	99.27	337.30
.920	24.78	.0284	44.57	2.84	2.686	68.36	56.88	248.30	537.80	43.00	93.14	126.40	456.00
.932	23.09	.0228	48.84	2.86	2.725	86.42	82.47	335.40	786.70	50.55	118.50	160.90	617.40

TABLE 2

TWO LOBE BEARING DIMENSIONLESS CHARACTERISTICS
($L/D = 0.5$, $m = 0.0$, $\chi = 160^{\circ}$, LOAD ON PAD)

ECC	PSI	S	$\bar{T}$	$\bar{Q}$REQ	$\bar{Q}$LOS	$\bar{K}$YY	$\bar{K}$YX	$\bar{K}$XY	$\bar{K}$XX	$\bar{B}$YY	$\bar{B}$YX	$\bar{B}$XY	$\bar{B}$XX
0.9382	20.78	0.01985	62.820	2.4500	1.5480	96.3300	108.3000	393.6000	1039.0000	41.4500	109.3000	151.6000	702.8000
0.9165	23.50	0.02963	52.890	2.4860	1.5220	61.7000	54.3100	228.0000	524.3000	31.6700	72.8900	100.6000	416.4000
0.8973	25.57	0.03941	46.970	2.5150	1.4970	44.7800	31.4100	154.8000	321.5000	26.6700	55.7800	76.1000	290.3000
0.8798	27.25	0.04919	42.950	2.5390	1.4740	34.8200	19.2400	114.8000	219.2000	23.7200	46.0800	61.9100	221.3000
0.8485	30.00	0.06904	37.660	2.5800	1.4330	23.6700	7.3420	71.0800	121.5000	20.3000	35.1800	45.8000	147.7000
0.8213	32.12	0.08859	34.310	2.6140	1.3970	18.9000	5.6370	54.2600	83.6800	15.1000	24.0800	32.0300	102.8000
0.8082	33.06	0.09876	32.930	2.6290	1.3790	16.6700	3.3940	47.0200	68.8100	14.7800	22.7200	29.6300	91.4800
0.7628	36.16	0.13840	29.380	2.6780	1.3190	11.9000	0.7538	31.1700	39.8400	11.6800	16.0700	20.4700	60.2300
0.7060	39.56	0.19750	26.240	2.7330	1.2450	8.4260	-0.8040	20.4600	22.3100	9.2980	11.2600	13.9900	39.4600
0.6302	43.76	0.29640	23.440	2.8000	1.1440	5.7680	-1.3760	12.9700	11.8100	6.9440	7.3010	8.8010	24.6700
0.5391	46.59	0.45440	21.260	2.8700	1.0170	3.9150	-1.6230	8.2990	6.0820	5.4570	4.8100	5.5260	15.7500
0.4704	52.19	0.61250	20.130	2.9180	0.9168	2.9170	-1.6470	6.2330	3.8720	4.6750	3.6250	4.0070	11.8900
0.4164	55.09	0.77050	19.450	2.9530	0.8335	2.4310	-1.5970	5.0930	2.7780	4.1390	2.8870	3.1030	9.7630
0.3585	58.35	0.98760	18.880	2.9880	0.7397	1.9530	-1.5500	4.1910	1.9570	3.7210	2.2950	2.3730	8.0970
0.2143	68.04	1.97500	17.980	3.0650	0.4800	0.9728	-1.2140	2.8010	0.8426	2.6050	1.0490	1.0480	5.5150
0.1150	77.14	3.95100	17.660	3.1080	0.2710	0.4764	-1.0450	2.3240	0.3980	2.1360	0.4873	0.4867	4.6240
0.0669	82.30	6.91400	17.590	3.1240	0.1605	0.2705	-1.0000	2.2010	0.2237	2.0160	0.2725	0.2722	4.3920

TABLE 3

TWO LOBE BEARING DIMENSIONLESS CHARACTERISTICS
(L/D = 0.5, m = 0.25, χ = 160°, LOAD ON PAD)

ECC	PSI	S	$\bar{T}$	$\bar{Q}$REQ	$\bar{Q}$LOS	$\bar{K}$YY	$\bar{K}$YX	$\bar{K}$XY	$\bar{K}$XX	$\bar{B}$YY	$\bar{B}$YX	$\bar{B}$XY	$\bar{B}$XX
.936	29.88	.0247	58.71	2.33	1.297	68.92	55.03	275.80	668.50	44.72	109.70	143.00	583.10
.926	31.68	.0296	54.50	2.35	1.297	61.26	53.69	227.20	523.90	31.45	72.42	100.20	416.30
.914	33.50	.0356	50.65	2.37	1.295	47.32	30.07	171.70	366.10	32.58	70.69	93.28	351.40
.903	35.20	.0415	47.75	2.38	1.295	42.79	30.85	146.10	300.80	23.88	49.09	68.36	264.20
.873	39.18	.0593	41.76	2.43	1.286	27.86	11.77	89.06	158.70	21.31	39.02	51.80	176.50
.831	44.32	.0889	36.29	2.48	1.270	18.58	5.53	53.77	83.30	14.76	23.61	31.56	102.20
.794	48.37	.1185	33.12	2.52	1.248	13.82	2.37	37.60	52.09	12.03	17.45	23.02	71.29
.762	51.78	.1481	31.02	2.55	1.225	10.98	.51	28.58	35.85	10.70	14.39	18.53	54.98
.733	54.79	.1778	29.53	2.58	1.201	9.15	-.54	22.99	26.39	9.86	12.44	15.65	44.78
.642	64.65	.2963	26.26	2.66	1.110	5.68	-1.35	12.93	11.84	6.87	7.20	8.73	24.67
.590	70.79	.3852	25.07	2.71	1.048	4.48	-1.54	9.79	7.86	5.89	5.57	6.57	18.64
.525	79.73	.5333	23.98	2.76	.955	3.33	-1.58	7.07	4.81	4.86	4.00	4.56	13.45
.476	87.14	.6815	23.40	2.78	.874	2.52	-1.98	5.72	3.47	5.07	2.77	3.28	11.04
.435	92.30	.8296	23.03	2.79	.803	1.87	-2.36	5.00	2.95	5.32	1.58	2.17	9.96
.400	95.92	.9778	22.77	2.70	.743	1.41	-2.62	4.59	2.73	5.41	.67	1.33	9.51
.360	99.51	1.1850	22.51	2.79	.676	.93	-2.77	4.26	2.62	5.28	-.29	.45	9.23
.257	107.20	2.0740	22.00	2.80	.521	-.05	-2.86	3.87	2.62	4.57	-2.22	-1.37	9.27
.204	110.50	2.9630	21.80	2.80	.454	-.45	-2.71	3.65	2.68	3.98	-2.99	-2.08	9.07
.122	114.20	5.9260	21.59	2.80	.380	-.91	-2.57	3.45	2.80	3.45	-3.85	-2.93	8.87
.079	115.40	9.7780	21.50	2.80	.357	-1.12	-2.52	3.37	2.91	3.30	-4.29	-3.36	8.81

TABLE 4

TWO LOBE BEARING DIMENSIONLESS CHARACTERISTICS
($L/D = 0.5$, $m = 0.5$, $\chi = 160^{\circ}$, LOAD ON PAD)

ECC	PSI	S	$\bar{T}$	$\bar{Q}$REQ	$\bar{Q}$LOS	$\bar{K}$YY	$\bar{K}$YX	$\bar{K}$XY	$\bar{K}$XX	$\bar{B}$YY	$\bar{B}$YX	$\bar{B}$XY	$\bar{B}$XX
.941	66.65	.0988	39.77	2.30	1.295	15.66	1.48	45.97	69.03	16.92	22.04	28.91	94.81
.926	70.18	.1185	38.15	2.32	1.272	12.81	-.39	37.00	52.66	15.53	16.64	22.45	75.64
.906	72.92	.1384	36.91	2.33	1.246	10.87	-1.15	30.95	43.22	13.76	11.16	16.39	61.65
.876	76.17	.1680	35.58	2.34	1.207	8.48	-3.56	24.49	32.64	13.73	8.00	12.50	51.84
.845	78.63	.1975	34.61	2.35	1.168	6.85	-5.34	20.36	26.45	13.98	5.53	9.59	46.11
.791	81.51	.2469	33.42	2.37	1.106	5.16	-5.99	16.11	21.96	12.20	.35	4.07	37.43
.740	83.53	.2964	32.57	2.37	1.051	4.09	-6.91	13.40	18.17	11.63	-.66	2.68	34.02
.684	85.23	.3556	31.81	2.38	.996	3.12	-7.42	11.44	16.44	10.92	-3.40	-.22	31.07
.605	87.19	.4544	30.95	2.39	.923	2.18	-7.56	9.39	14.30	9.49	-5.07	-2.16	27.37
.506	89.04	.6125	30.13	2.40	.845	1.27	-7.82	7.90	12.93	8.61	-7.00	-4.30	25.76
.433	90.17	.7705	29.65	2.40	.794	.83	-7.77	7.10	12.01	7.85	-7.52	-4.98	24.39
.377	90.93	.9285	29.35	2.40	.761	.46	-7.80	6.77	11.82	7.52	-8.44	-5.98	24.71
.333	91.38	1.0870	29.14	2.40	.738	.24	-7.68	6.36	11.63	7.05	-8.96	-6.52	23.20
.297	91.71	1.2450	29.00	2.40	.721	.12	-7.64	6.17	11.37	6.83	-9.03	-6.64	22.90
.268	91.96	1.4030	28.90	2.41	.708	.04	-7.61	6.04	11.19	6.66	-9.08	-6.73	22.69
.244	92.16	1.5610	28.82	2.41	.699	-.02	-7.58	5.94	11.06	6.54	-9.12	-6.79	22.54
.223	92.32	1.7190	28.76	2.41	.692	-.07	-7.56	5.87	10.96	6.45	-9.15	-6.85	22.43
.134	92.83	2.9630	28.56	2.41	.667	-.31	-7.49	5.65	10.88	6.13	-9.72	-7.46	22.12
.068	93.02	5.9260	28.48	2.41	.657	-.37	-7.46	5.56	10.75	6.00	-9.73	-7.50	21.98

TABLE 5

THREE LOBE BEARING DIMENSIONLESS CHARACTERISTICS
($L/D = 0.5$, $m = 0.0$, $\chi = 100^{\circ}$, LOAD BETWEEN PADS)

ECC	PSI	S	$\bar{T}$	$\bar{Q}$REQ	$\bar{Q}$LOS	$\bar{K}$YY	$\bar{K}$YX	$\bar{K}$XY	$\bar{K}$XX	$\bar{B}$YY	$\bar{B}$YX	$\bar{B}$XY	$\bar{B}$XX
.945	26.80	.0987	53.37	4.15	1.510	90.04	80.32	243.80	298.70	56.40	111.40	143.60	331.50
.915	30.80	.1481	43.54	4.18	1.461	47.84	29.45	113.10	112.60	35.81	60.34	78.54	161.00
.888	33.85	.1976	38.07	4.20	1.415	32.15	14.20	68.63	58.09	27.11	40.42	53.02	99.51
.862	36.35	.2471	34.47	4.22	1.371	24.43	7.88	47.96	35.39	22.71	30.81	40.35	70.59
.838	38.47	.2963	31.91	4.24	1.329	18.97	4.21	35.06	23.15	18.87	23.76	31.12	52.13
.793	42.02	.3950	28.43	4.27	1.252	12.93	.89	21.72	11.86	14.31	15.90	20.85	32.69
.715	47.46	.5926	24.50	4.33	1.119	7.90	-1.10	11.56	4.56	10.19	9.35	12.21	17.61
.650	51.63	.7902	22.32	4.37	1.008	5.66	-1.67	7.55	2.23	8.23	6.52	8.46	11.67
.545	57.91	1.1850	20.00	4.43	.835	3.70	-2.06	4.38	.66	6.62	4.17	5.28	6.98
.390	66.85	2.0740	18.00	4.52	.591	2.07	-2.08	2.28	.05	5.10	2.18	2.72	3.85
.298	72.19	2.9630	17.30	4.58	.450	1.48	-2.14	1.68	-.06	4.79	1.54	1.88	2.98
.192	78.50	4.9390	16.78	4.63	.288	.90	-2.14	1.27	-.08	4.50	.91	1.09	2.38
.124	82.61	7.9020	16.58	4.66	.185	.58	-2.19	1.11	-.06	4.45	.58	.68	2.15
.091	84.58	10.8600	16.52	4.68	.136	.42	-2.20	1.06	-.04	4.44	.42	.49	2.09
.056	86.67	17.7800	16.48	4.69	.083	.26	-2.22	1.03	-.03	4.46	.26	.30	2.04

TABLE 6

THREE LOBE BEARING DIMENSIONLESS CHARACTERISTICS
($L/D = 0.5$, $m = 0.250$, $\chi = 100^{\circ}$, LOAD BETWEEN PADS)

ECC	PSI	S	$\bar{T}$	$\bar{Q}$REQ	$\bar{Q}$LDS	$\bar{K}$YY	$\bar{K}$YX	$\bar{K}$XY	$\bar{K}$XX	$\bar{B}$YY	$\bar{B}$YX	$\bar{B}$XY	$\bar{B}$XX
.950	23.60	.0791	51.72	3.39	1.079	100.80	64.40	206.60	235.80	73.72	106.60	133.90	269.60
.913	26.81	.1087	45.56	3.41	1.046	65.35	31.64	124.00	124.70	53.46	69.50	88.17	166.50
.880	29.42	.1384	41.52	3.43	1.015	46.74	17.02	83.81	76.26	41.43	49.56	63.29	114.90
.832	32.97	.1876	37.11	3.46	.967	32.45	7.50	53.58	42.15	32.15	34.28	44.05	74.87
.790	35.91	.2370	34.18	3.48	.923	24.11	2.96	37.56	26.33	25.79	25.00	32.33	53.08
.745	38.88	.2963	31.74	3.50	.875	18.74	.48	27.47	16.95	22.18	19.63	25.29	39.69
.680	43.00	.3950	29.07	3.54	.804	13.19	-1.46	18.12	9.50	17.26	13.31	17.29	26.49
.578	49.32	.5926	26.11	3.59	.690	8.30	-2.62	10.52	4.22	12.82	7.96	10.39	15.78
.500	54.13	.7902	24.54	3.63	.601	6.07	-2.93	7.42	2.39	10.80	5.61	7.34	11.40
.388	61.13	1.1850	22.99	3.68	.476	3.99	-3.10	4.88	1.09	9.05	3.51	4.62	7.81
.252	70.21	2.0740	21.83	3.74	.321	2.25	-3.04	3.23	.46	7.56	1.70	2.37	5.44
.183	74.93	2.9630	21.48	3.77	.244	1.52	-2.95	2.76	.36	6.96	.88	1.45	4.76
.111	79.01	4.9390	21.25	3.77	.181	.84	-2.94	2.40	.24	6.60	.08	.92	4.30
.069	80.82	7.9020	21.18	3.77	.159	.59	-2.85	2.37	.22	6.18	-.21	.74	4.49
.049	81.46	10.8800	21.14	3.77	.153	.49	-2.75	2.39	.24	5.87	-.32	.67	4.63

TABLE 7

THREE LOBE BEARING DIMENSIONLESS CHARACTERISTICS
($L/D = 0.5$, $m = 0.50$, $\chi = 100^{\circ}$, LOAD BETWEEN PADS)

ECC	PSI	S	$\bar{T}$	$\bar{Q}$REQ	$\bar{Q}$LOS	$\bar{K}$YY	$\bar{K}$YX	$\bar{K}$XY	$\bar{K}$XX	$\bar{B}$YY	$\bar{B}$YX	$\bar{B}$XY	$\bar{B}$XX
.965	18.00	.0593	57.54	2.60	.686	146.20	62.37	227.40	251.30	123.00	108.30	135.20	277.90
.911	20.79	.0788	52.12	2.62	.661	102.70	33.70	153.10	153.80	94.40	76.82	96.92	191.80
.875	22.65	.0939	49.17	2.64	.644	82.41	21.76	119.80	113.20	79.91	61.38	78.07	152.00
.843	24.24	.1084	46.95	2.65	.629	71.06	16.04	100.50	89.73	73.32	54.55	69.09	129.90
.786	27.12	.1384	43.57	2.67	.599	52.97	7.19	72.32	58.78	59.54	40.47	51.71	95.40
.722	30.30	.1778	40.57	2.69	.565	39.15	1.41	51.75	38.00	47.88	29.06	37.66	69.39
.644	34.24	.2370	37.68	2.72	.520	27.90	-2.32	35.79	23.22	37.63	19.51	25.85	48.66
.580	37.50	.2963	35.82	2.74	.483	21.90	-3.88	27.43	16.00	32.75	15.10	20.21	38.02
.552	38.94	.3259	35.13	2.75	.467	19.74	-4.37	24.53	13.66	30.85	13.36	18.08	34.23
.466	43.38	.4347	33.35	2.77	.419	14.42	-5.34	17.84	8.67	25.89	8.78	12.66	25.33
.355	49.17	.6421	31.69	2.78	.364	9.70	-5.98	12.45	5.14	21.65	4.76	8.03	18.51
.283	52.69	.8495	30.93	2.79	.335	7.59	-6.26	10.29	3.94	19.63	2.85	5.88	16.09
.211	55.99	1.1850	30.38	2.79	.313	5.93	-6.37	8.74	3.35	17.66	1.17	4.04	14.57
.124	59.50	2.0740	29.96	2.80	.295	4.54	-6.49	7.54	3.13	15.95	-.26	2.55	13.82
.088	60.77	2.9630	29.85	2.80	.291	4.21	-6.75	7.27	3.07	15.87	-.42	2.30	14.00
.053	61.87	4.9390	29.78	2.80	.288	3.87	-6.82	7.05	3.18	15.40	-.81	1.92	14.14

INDEX FOR TILTING PAD BEARING DATA TABLES

Tilting Pad Configuration (1)	L/D	Single Pad Data	Preload m	Assembled Bearing Data (2)
4 80 Deg. Pads	0.25	Tables 8, 9	0.0	Tables 10
			0.2	11
			0.3	12
			0.5	13
	0.50	Tables 14, 15	0.0	Tables 16
			0.2	17
			0.3	18
			0.5	19
	1.00	Tables 20, 21	0.0	Tables 22
			0.2	23
			0.3	24
			0.5	25
5 55 Deg. Pads	0.25	Tables 26, 27	0.0	Tables 28
			0.2	29
			0.3	30
			0.5	31
	0.50	Tables 32, 33	0.0	Tables 34
			0.2	35
			0.3	36
			0.5	37
	1.00	Tables 38, 39	0.0	Tables 40
			0.2	41
			0.3	42
			0.5	43

(1) Centrally pivoted pads.

(2) Synchronous frequency only.

TABLE 8

DYNAMIC DATA OF FIXED PAD (L/D = 0.25, Offset = .500, $\chi = 80^{\circ}$, LOAD ON PAD CENTER)

SOMERFELD	$\bar{K}_{\eta\eta}$	$-\bar{K}_{\eta\xi}$	$-\bar{K}_{\xi\eta}$	$\bar{K}_{\xi\xi}$	$\bar{B}_{\eta\eta}$	$\bar{B}_{\eta\xi}$	$\bar{B}_{\xi\eta}$	$\bar{B}_{\xi\xi}$
30.0000	.204420E-01	-.398514E-01	.393285	.855215E-01	.812310E-01	-.205351E-01	-.205355E-01	.785524
10.0000	.672093E-01	-.494217E-01	.541860	.283778	.111990	-.690272E-01	-.690285E-01	1.07498
5.00000	.152613	-.659934E-01	.852774	.653995	.176707	-.162375	-.162378	1.67691
3.80000	.213882	-.757782E-01	1.07250	.924240	.222725	-.232104	-.232108	2.10036
3.00000	.287572	-.856077E-01	1.33140	1.25311	.277215	-.318289	-.318295	2.59752
2.50000	.361710	-.943232E-01	1.58802	1.58774	.331530	-.407260	-.407268	3.08969
2.00000	.480587	-.105952	1.99298	2.13067	.417775	-.553833	-.553843	3.86454
1.50000	.693989	-.122872	2.70865	3.12229	.571768	-.827417	-.827433	5.23265
1.00000	1.17064	-.149195	4.28257	5.39794	.916543	-1.47667	-1.47670	8.23996
.700000	1.78370	-.127302	6.44191	8.85462	1.32661	-2.32028	-2.35762	12.3555
.550000	2.29887	-.374218E-01	8.45333	12.4887	1.62450	-2.99425	-3.11178	16.1624
.400000	3.24560	.159820	12.2396	19.6988	2.17863	-4.29673	-4.57489	23.3872
.350000	3.72317	.309936	14.2800	23.9115	2.43184	-4.93257	-5.32087	27.2650
.280000	4.67443	.674596	18.5070	33.1240	2.91166	-6.18832	-6.83115	35.2949
.200000	6.65765	1.52384	27.6316	54.1897	3.93263	-8.96662	-10.1741	52.8882
.150000	8.99289	2.74159	39.0684	82.7779	5.09855	-12.3469	-14.3359	75.2516
.900000E-01	15.2632	7.22156	72.7048	177.630	7.91762	-21.3746	-25.9456	141.412
.600000E-01	23.4027	16.6783	120.405	334.086	10.4235	-30.7235	-39.2329	228.593

TABLE 9

STATIC DATA OF FIXED PAD (L/D = 0.25, Offset = .500, $\chi = 80^{\circ}$, LOAD ON PAD CENTER)

	ECC. (DIM)	ATTITUDE (DEG)	H PIVOT (DIM)	SOMMERFELD (DIM)	$\bar{T}$ORQUE (DIM)	$\bar{Q}$IN (DIM)	$\bar{Q}$AXIAL (DIM)
1	.09	75.28	.978	3.00E+01	4.484	1.611	.140
2	.23	58.32	.880	1.00E+01	4.963	1.569	.315
3	.36	47.40	.759	5.00E+00	5.730	1.462	.423
4	.41	43.78	.705	3.80E+00	6.160	1.405	.456
5	.46	41.04	.657	3.00E+00	6.595	1.352	.479
6	.49	39.12	.620	2.50E+00	6.973	1.310	.494
7	.53	37.01	.576	2.00E+00	7.491	1.258	.508
8	.58	34.62	.521	1.50E+00	8.252	1.192	.522
9	.65	31.60	.450	1.00E+00	9.533	1.100	.534
10	.70	29.74	.392	7.00E-01	10.898	1.024	.541
11	.73	28.46	.356	5.50E-01	11.972	.974	.542
12	.77	26.87	.313	4.00E-01	13.612	.910	.541
13	.79	26.23	.296	3.50E-01	14.384	.883	.539
14	.81	25.18	.268	2.80E-01	15.799	.841	.529
15	.84	23.67	.231	2.00E-01	18.260	.779	.522
16	.86	22.43	.203	1.50E-01	20.721	.729	.510
17	.90	20.33	.159	9.00E-02	26.058	.646	.477
18	.92	18.75	.129	6.00E-02	31.340	.585	.446

TABLE 10

FOUR SHOE TILTING PAD BEARING (L/D = 0.25, m = 0, Offset = .500, $\chi = 80^{\circ}$, LOAD BETWEEN PADS)
DIMENSIONLESS SYNCHRONOUS DYNAMIC DATA

ECC. (DIM)	SOMMERFELD (DIM)	$\bar{K}_{yy}$ (DIM)	$\bar{K}_{xx}$ (DIM)	$\bar{B}_{yy}$ (DIM)	$\bar{B}_{xx}$ (DIM)	$\bar{T}$ TORQUE (DIM)	$\bar{Q}$ REQUIRED (DIM)	$\bar{Q}$ LOSS (DIM)
.050	1.69E+01	.064	.064	1.094	1.094	17.568	6.479	.437
.100	1.07E+01	.110	.110	1.102	1.102	17.632	6.478	.477
.150	7.82E+00	.163	.163	1.122	1.122	17.740	6.464	.592
.200	6.10E+00	.224	.224	1.154	1.154	17.892	6.438	.686
.250	4.94E+00	.297	.297	1.201	1.201	18.092	6.399	.759
.300	4.09E+00	.385	.385	1.264	1.264	18.342	6.350	.812
.350	3.42E+00	.494	.494	1.347	1.347	18.646	6.294	.855
.400	2.86E+00	.630	.630	1.453	1.453	19.010	6.237	.898
.450	2.40E+00	.802	.802	1.586	1.586	19.441	6.176	.935
.500	2.02E+00	1.021	1.021	1.754	1.754	19.946	6.112	.967
.550	1.69E+00	1.302	1.302	1.965	1.965	20.537	6.044	.994
.600	1.41E+00	1.670	1.670	2.229	2.229	21.227	5.974	1.017
.650	1.17E+00	2.155	2.155	2.561	2.561	22.034	5.900	1.036
.700	9.70E-01	2.808	2.808	2.981	2.981	22.981	5.824	1.051
.725	8.79E-01	3.218	3.218	3.232	3.232	23.516	5.785	1.058
.750	7.95E-01	3.702	3.702	3.518	3.518	24.098	5.745	1.063
.775	7.17E-01	4.274	4.274	3.846	3.846	24.732	5.705	1.068
.800	6.45E-01	4.958	4.958	4.224	4.224	25.425	5.664	1.073
.825	5.76E-01	5.778	5.778	4.664	4.664	26.185	5.622	1.077
.850	5.17E-01	6.766	6.766	5.183	5.183	27.018	5.580	1.080
.875	4.60E-01	7.967	7.967	5.804	5.804	27.936	5.536	1.083
.900	4.09E-01	9.434	9.434	6.545	6.545	28.949	5.491	1.084
.925	3.61E-01	11.230	11.230	7.412	7.412	30.071	5.446	1.084
.950	3.16E-01	13.448	13.448	8.437	8.437	31.318	5.399	1.084
.975	2.76E-01	16.224	16.224	9.686	9.686	32.712	5.351	1.082
1.000	2.42E-01	19.736	19.736	11.240	11.240	34.276	5.301	1.076
1.025	2.10E-01	24.226	24.226	13.174	13.174	36.041	5.250	1.064
1.050	1.80E-01	30.038	30.038	15.560	15.560	38.046	5.198	1.053
1.075	1.54E-01	37.677	37.677	18.534	18.534	40.340	5.143	1.047
1.100	1.30E-01	47.910	47.910	22.332	22.332	42.967	5.087	1.038
1.125	1.08E-01	61.695	61.695	27.299	27.299	46.068	5.029	1.022
1.150	8.94E-02	81.517	81.517	33.908	33.908	49.692	4.968	1.001
1.175	7.26E-02	109.699	109.699	43.155	43.155	54.011	4.904	.973
1.200	5.80E-02	151.409	151.409	56.882	56.882	59.241	4.839	.939
1.225	4.52E-02	215.593	215.593	78.722	78.722	65.692	4.769	.901
1.250	3.43E-02	319.540	319.540	116.481	116.481	73.827	4.685	.871
1.275	2.52E-02	499.910	499.910	188.786	188.786	84.364	4.550	.896

TABLE 11

FOUR SHOE TILTING PAD BEARING (L/D = 0.25, Offset = .500, m = 0.2, $\chi = 80^{\circ}$, LOAD BETWEEN PADS)
DIMENSIONLESS SYNCHRONOUS DYNAMIC DATA

ECC. (DIM)	SOMMERFELD (DIM)	$\bar{K}_{yy}$ (DIM)	$\bar{K}_{xx}$ (DIM)	$\bar{B}_{yy}$ (DIM)	$\bar{B}_{xx}$ (DIM)	$\bar{T}$ORQUE (DIM)	$\bar{Q}$ REQUIRED (DIM)	$\bar{Q}$ LOSS (DIM)
.050	1.45E+01	.718	.718	1.860	1.860	21.813	6.009	1.582
.100	7.12E+00	.754	.754	1.891	1.891	21.891	5.997	1.558
.150	4.63E+00	.817	.817	1.945	1.945	22.023	5.977	1.518
.200	3.36E+00	.908	.908	2.023	2.023	22.210	5.948	1.460
.250	2.59E+00	1.033	1.033	2.126	2.126	22.456	5.910	1.385
.300	2.07E+00	1.198	1.198	2.260	2.260	22.764	5.863	1.293
.350	1.70E+00	1.411	1.411	2.423	2.423	23.140	5.816	1.214
.400	1.40E+00	1.694	1.694	2.623	2.623	23.592	5.769	1.146
.450	1.21E+00	2.077	2.077	2.869	2.869	24.126	5.720	1.080
.500	1.04E+00	2.561	2.561	3.170	3.170	24.755	5.668	1.046
.550	8.67E-01	3.180	3.180	3.538	3.538	25.492	5.613	1.057
.600	7.54E-01	3.983	3.983	3.996	3.996	26.354	5.557	1.065
.650	6.37E-01	5.044	5.044	4.572	4.572	27.365	5.499	1.073
.700	5.34E-01	6.463	6.463	5.315	5.315	28.553	5.438	1.079
.725	4.87E-01	7.353	7.353	5.771	5.771	29.223	5.407	1.082
.750	4.44E-01	8.396	8.396	6.301	6.301	29.952	5.374	1.083
.775	4.03E-01	9.620	9.620	6.910	6.910	30.746	5.342	1.084
.800	3.65E-01	11.060	11.060	7.599	7.599	31.611	5.308	1.084
.825	3.30E-01	12.763	12.763	8.385	8.385	32.557	5.273	1.084
.850	2.97E-01	14.794	14.794	9.302	9.302	33.593	5.238	1.083
.875	2.67E-01	17.237	17.237	10.390	10.390	34.731	5.202	1.081
.900	2.38E-01	20.192	20.192	11.687	11.687	35.965	5.164	1.075
.925	2.12E-01	23.792	23.792	13.232	13.232	37.370	5.126	1.065
.950	1.88E-01	28.213	28.213	15.064	15.064	38.908	5.086	1.056
.975	1.66E-01	33.693	33.693	17.235	17.235	40.621	5.046	1.050
1.000	1.46E-01	40.562	40.562	19.853	19.853	42.539	5.004	1.045
1.025	1.27E-01	49.285	49.285	23.055	23.055	44.697	4.961	1.036
1.050	1.10E-01	60.501	60.501	27.034	27.034	47.141	4.916	1.024
1.075	9.46E-02	75.180	75.180	32.019	32.019	49.926	4.870	1.008
1.100	8.05E-02	94.677	94.677	38.452	38.452	53.124	4.822	.988
1.125	6.76E-02	121.011	121.011	47.066	47.066	56.830	4.773	.963
1.150	5.64E-02	157.348	157.348	59.067	59.067	61.172	4.722	.935
1.175	4.63E-02	208.819	208.819	76.569	76.569	66.321	4.668	.904
1.200	3.73E-02	284.133	284.133	103.480	103.480	72.514	4.606	.877
1.225	2.94E-02	398.964	398.964	147.510	147.510	80.084	4.523	.871
1.250	2.26E-02	583.628	583.628	225.142	225.142	89.512	4.377	.935

TABLE 12

FOUR SHOE TILTING PAD BEARING (L/D = 0.25, Offset = .500, m = 0.3, $\chi = 80^{\circ}$, LOAD BETWEEN PADS)
DIMENSIONLESS SYNCHRONOUS DYNAMIC DATA

ECC. (DIM)	SOMMERFELD (DIM)	$\bar{K}_{yy}$ (DIM)	$\bar{K}_{xx}$ (DIM)	$\bar{B}_{yy}$ (DIM)	$\bar{B}_{xx}$ (DIM)	$\bar{T}$ORQUE (DIM)	$\bar{Q}$ REQUIRED (DIM)	$\bar{Q}$ LOSS (DIM)
.050	1.07E+01	1.437	1.437	2.587	2.587	24.827	5.599	1.830
.100	5.30E+00	1.498	1.498	2.630	2.630	24.916	5.595	1.822
.150	3.48E+00	1.601	1.601	2.703	2.703	25.066	5.589	1.812
.200	2.55E+00	1.753	1.753	2.809	2.809	25.280	5.582	1.798
.250	1.98E+00	1.959	1.959	2.950	2.950	25.561	5.569	1.775
.300	1.59E+00	2.231	2.231	3.131	3.131	25.914	5.551	1.740
.350	1.30E+00	2.581	2.581	3.358	3.358	26.344	5.526	1.692
.400	1.08E+00	3.029	3.029	3.635	3.635	26.859	5.495	1.632
.450	9.05E-01	3.603	3.603	3.976	3.976	27.471	5.457	1.558
.500	7.61E-01	4.341	4.341	4.397	4.397	28.190	5.413	1.473
.550	6.40E-01	5.299	5.299	4.921	4.921	29.034	5.362	1.377
.600	5.39E-01	6.546	6.546	5.577	5.577	30.023	5.313	1.297
.650	4.51E-01	8.197	8.197	6.422	6.422	31.179	5.263	1.225
.700	3.81E-01	10.413	10.413	7.506	7.506	32.534	5.210	1.154
.725	3.49E-01	11.783	11.783	8.143	8.143	33.298	5.182	1.119
.750	3.19E-01	13.376	13.376	8.867	8.867	34.127	5.154	1.085
.775	2.91E-01	15.238	15.238	9.699	9.699	35.030	5.125	1.083
.800	2.65E-01	17.429	17.429	10.670	10.670	36.013	5.096	1.080
.825	2.40E-01	20.018	20.018	11.801	11.801	37.086	5.065	1.075
.850	2.17E-01	23.093	23.093	13.122	13.122	38.260	5.034	1.067
.875	1.95E-01	26.770	26.770	14.660	14.660	39.548	5.001	1.058
.900	1.75E-01	31.194	31.194	16.435	16.435	40.965	4.968	1.052
.925	1.57E-01	36.562	36.562	18.516	18.516	42.530	4.934	1.048
.950	1.40E-01	43.133	43.133	20.981	20.981	44.264	4.899	1.043
.975	1.24E-01	51.263	51.263	23.936	23.936	46.192	4.863	1.034
1.000	1.09E-01	61.415	61.415	27.518	27.518	48.347	4.825	1.023
1.025	9.53E-02	74.280	74.280	31.881	31.881	50.766	4.786	1.009
1.050	8.29E-02	90.756	90.756	37.326	37.326	53.499	4.746	.992
1.075	7.15E-02	112.123	112.123	44.315	44.315	56.606	4.705	.971
1.100	6.12E-02	140.267	140.267	53.551	53.551	60.168	4.662	.947
1.125	5.18E-02	178.029	178.029	66.169	66.169	64.285	4.618	.921
1.150	4.33E-02	229.835	229.835	84.067	84.067	69.094	4.570	.894
1.175	3.57E-02	302.860	302.860	110.563	110.563	74.772	4.515	.873
1.200	2.89E-02	409.286	409.286	151.780	151.780	81.565	4.440	.873
1.225	2.29E-02	571.058	571.058	219.756	219.756	89.809	4.313	.928

TABLE 13

FOUR SHOE TILTING PAD BEARING (L/D = 0.25, Offset = .500, m = 0.5, $\chi = 80^{\circ}$, LOAD BETWEEN PADS)
DIMENSIONLESS SYNCHRONOUS DYNAMIC DATA

ECC. (DIM)	SOMMERFELD (DIM)	$\bar{K}_{yy}$ (DIM)	$\bar{K}_{xx}$ (DIM)	$\bar{B}_{yy}$ (DIM)	$\bar{B}_{xx}$ (DIM)	$\bar{T}$ TORQUE (DIM)	$\bar{Q}$ REQUIRED (DIM)	$\bar{Q}$ LOSS (DIM)
.050	4.60E+00	5.899	5.899	5.957	5.957	34.418	4,659	2.105
.100	2.36E+00	6.091	6.091	6.049	6.049	34.545	4.658	2.103
.150	1.56E+00	6.421	6.421	6.207	6.207	34.758	4.655	2.099
.200	1.15E+00	6.906	6.906	6.438	6.438	35.063	4.651	2.094
.250	8.92E-01	7.566	7.566	6.752	6.752	35.461	4.646	2.087
.300	7.19E-01	8.432	8.432	7.165	7.165	35.961	4.640	2.078
.350	5.92E-01	9.548	9.548	7.702	7.702	36.570	4.632	2.066
.400	4.94E-01	10.965	10.965	8.373	8.373	37.298	4.623	2.055
.450	4.16E-01	12.749	12.749	9.182	9.182	38.158	4.613	2.040
.500	3.52E-01	15.004	15.004	10.176	10.176	39.166	4.600	2.023
.550	2.99E-01	17.874	17.874	11.427	11.427	40.342	4.585	2.003
.600	2.54E-01	21.553	21.553	13.009	13.009	41.711	4.569	1.976
.650	2.15E-01	26.303	26.303	15.001	15.001	43.304	4.550	1.943
.700	1.82E-01	32.508	32.508	17.474	17.474	45.163	4.529	1.913
.725	1.67E-01	36.322	36.322	18.942	18.942	46.207	4.518	1.898
.750	1.53E-01	40.732	40.732	20.602	20.602	47.338	4.507	1.885
.775	1.40E-01	45.857	45.857	22.487	22.487	48.565	4.495	1.870
.800	1.27E-01	51.840	51.840	24.642	24.642	49.897	4.482	1.853
.825	1.16E-01	58.858	58.858	27.118	27.118	51.348	4.469	1.833
.850	1.05E-01	67.147	67.147	29.973	29.973	52.929	4.455	1.812
.875	9.52E-02	77.012	77.012	33.273	33.273	54.657	4.439	1.788
.900	8.59E-02	88.600	88.800	37.159	37.159	56.551	4.422	1.762
.925	7.72E-02	102.978	102.978	41.794	41.794	58.633	4.404	1.732
.950	6.91E-02	120.158	120.158	47.403	47.403	60.930	4.385	1.700
.975	6.16E-02	141.154	141.154	54.296	54.296	63.474	4.365	1.664
1.000	5.47E-02	167.061	167.061	62.915	62.915	66.304	4.344	1.626
1.025	4.82E-02	199.380	199.380	73.895	73.895	69.467	4.320	1.586
1.050	4.22E-02	240.211	240.211	88.170	88.170	73.020	4.294	1.545
1.075	3.67E-02	292.551	292.551	107.154	107.154	77.035	4.262	1.507
1.100	3.17E-02	360.791	360.791	133.044	133.044	81.600	4.221	1.475
1.125	2.71E-02	451.550	451.550	169.357	169.357	86.827	4.162	1.461
1.150	2.29E-02	575.155	575.155	221.954	221.954	92.858	4.069	1.482

TABLE 14

DYNAMIC DATA OF FIXED PAD (L/D = 0.50, Offset = .500, $\chi = 80^{o}$, LOAD ON PAD CENTER)

SOMERFELD	$\bar{K}_{\eta\eta}$	$-\bar{K}_{\eta\xi}$	$-\bar{K}_{\xi\eta}$	$\bar{K}_{\xi\xi}$	$\bar{B}_{\eta\eta}$	$\bar{B}_{\eta\xi}$	$\bar{B}_{\xi\eta}$	$\bar{B}_{\xi\xi}$
30.0000	.157765E-01	-.721853E-01	1.07782	.844537E-01	.144974	-.157837E-01	-.157844E-01	2.15530
10.0000	.482947E-01	-.759825E-01	1.15574	.258826	.155892	-.485433E-01	-.485456E-01	2.31195
5.00000	.101750	-.854736E-01	1.36800	.546825	.185833	-.103463	-.103468	2.73849
3.80000	.138660	-.925544E-01	1.53634	.746694	.209774	-.142179	-.142186	3.07724
3.00000	.182378	-.100698	1.74125	.984364	.239133	-.188773	-.188782	3.49014
2.50000	.226302	-.108432	1.94770	1.22405	.268936	-.236297	-.236308	3.90665
2.00000	.296240	-.119649	2.27261	1.60723	.316261	-.313234	-.313249	4.56302
1.50000	.421902	-.137370	2.84284	2.29992	.400454	-.454864	-.454886	5.71804
1.00000	.702376	-.168248	4.06009	3.86099	.584366	-.783441	-.783480	8.19402
.700000	1.10842	-.200760	5.73741	6.14926	.845626	-1.28298	-1.28304	11.6273
.550000	1.51354	-.225058	7.35222	8.45853	1.10439	-1.80392	-1.80401	14.9537
.400000	2.28993	-.259575	10.3556	12.9430	1.60164	-2.85366	-2.85380	21.1890
.350000	2.72924	-.277449	12.0254	15.5115	1.88607	-3.47424	-3.47441	24.6852
.280000	3.64968	-.304150	15.4711	20.9468	2.48850	-4.82515	-4.82537	31.9364
.200000	5.56697	-.291939	22.8093	33.2320	3.72673	-7.74515	-7.83727	47.5534
.150000	7.79168	-.108160	31.8518	49.7080	5.10022	-11.1888	-11.6261	67.0143
.900000E-01	13.5827	1.26845	57.8345	103.796	8.35870	-20.0973	-22.4578	123.634
.600000E-01	21.1860	3.65387	94.4447	188.348	12.8338	-33.1854	-38.7898	206.833
.280000E-01	47.6654	24.7911	242.645	620.724	25.0862	-75.1217	-98.2075	538.715

TABLE 15

STATIC DATA OF FIXED PAD (L/D = 0.5, Offset = .500, $\chi = 80^{\circ}$, LOAD ON PAD CENTER)

	ECC. (DIM)	ATTITUDE (DEG)	H PIVOT (DIM)	SOMMERFELD (DIM)	$\bar{T}$ORQUE (DIM)	$\bar{Q}$IN (DIM)	$\bar{Q}$AXIAL (DIM)
1	.03	83.77	.997	3.00E+01	4.401	1.585	.037
2	.09	72.49	.973	1.00E+01	4.505	1.584	.104
3	.17	60.66	.917	5.00E+00	4.768	1.540	.177
4	.21	55.65	.880	3.80E+00	4.959	1.503	.208
5	.25	51.69	.842	3.00E+00	5.172	1.462	.233
6	.29	48.67	.810	2.50E+00	5.372	1.424	.251
7	.33	45.25	.767	2.00E+00	5.659	1.371	.270
8	.39	41.33	.709	1.50E+00	6.104	1.297	.290
9	.47	36.69	.624	1.00E+00	6.889	1.184	.309
10	.54	33.36	.552	7.00E-01	7.750	1.082	.317
11	.58	31.45	.505	5.50E-01	8.436	1.013	.319
12	.63	29.26	.446	4.00E-01	9.489	.925	.317
13	.66	28.46	.423	3.50E-01	9.992	.888	.315
14	.69	27.26	.386	2.80E-01	10.903	.830	.310
15	.74	25.68	.335	2.00E-01	12.511	.745	.298
16	.78	24.49	.295	1.50E-01	14.151	.677	.295
17	.83	22.57	.232	9.00E-02	17.852	.563	.282
18	.87	21.13	.189	6.00E-02	21.748	.479	.261
19	.92	18.47	.125	2.80E-02	32.366	.339	.202

TABLE 16

FOUR SHOE TILTING PAD BEARING (L/D = 0.5, Offset = .500, m = 0.0, $\chi = 80^{\circ}$, LOAD BETWEEN PADS)
DIMENSIONLESS SYNCHRONOUS DYNAMIC DATA

ECC. (DIM)	SOMMERFELD (DIM)	$\bar{K}_{yy}$ (DIM)	$\bar{K}_{xx}$ (DIM)	$\bar{B}_{yy}$ (DIM)	$\bar{B}_{xx}$ (DIM)	$\bar{T}$ TORQUE (DIM)	$\bar{Q}$ REQUIRED (DIM)	$\bar{Q}$ LOSS (DIM)
.050	5.99E+00	.141	.141	3.211	3.211	17.567	6.333	.240
.100	3.90E+00	.248	.248	3.249	3.249	17.630	6.281	.333
.150	2.95E+00	.369	.369	3.319	3.319	17.736	6.212	.394
.200	2.34E+00	.514	.514	3.422	3.422	17.886	6.139	.446
.250	1.90E+00	.691	.691	3.565	3.565	18.082	6.060	.488
.300	1.57E+00	.905	.905	3.751	3.751	18.327	5.978	.522
.350	1.32E+00	1.169	1.169	3.989	3.989	18.626	5.892	.551
.400	1.11E+00	1.497	1.497	4.287	4.287	18.982	5.803	.575
.450	9.32E-01	1.906	1.906	4.659	4.659	19.403	5.712	.595
.500	7.87E-01	2.423	2.423	5.121	5.121	19.897	5.619	.610
.550	6.63E-01	3.083	3.083	5.695	5.695	20.473	5.523	.622
.600	5.58E-01	3.934	3.934	6.408	6.408	21.145	5.425	.631
.650	4.67E-01	5.045	5.045	7.300	7.300	21.929	5.324	.636
.700	3.89E-01	6.519	6.519	8.422	8.422	22.846	5.222	.638
.725	3.54E-01	7.436	7.436	9.091	9.091	23.363	5.170	.637
.750	3.22E-01	8.504	8.504	9.846	9.846	23.925	5.117	.636
.775	2.92E-01	9.756	9.756	10.701	10.701	24.536	5.064	.635
.800	2.65E-01	11.229	11.229	11.671	11.671	25.202	5.010	.632
.825	2.39E-01	12.974	12.974	12.776	12.776	25.931	4.955	.628
.850	2.15E-01	15.056	15.056	14.039	14.039	26.731	4.900	.624
.875	1.92E-01	17.558	17.558	15.497	15.497	27.613	4.844	.619
.900	1.72E-01	20.590	20.590	17.197	17.197	28.586	4.787	.611
.925	1.53E-01	24.287	24.287	19.196	19.196	29.666	4.729	.602
.950	1.35E-01	28.837	28.837	21.576	21.576	30.869	4.670	.595
.975	1.19E-01	34.485	34.485	24.440	24.440	32.218	4.611	.592
1.000	1.05E-01	41.551	41.551	27.921	27.921	33.736	4.550	.590
1.025	9.14E-02	50.495	50.495	32.262	32.262	35.457	4.487	.585
1.050	7.93E-02	61.927	61.927	37.640	37.640	37.420	4.423	.578
1.075	6.83E-02	76.726	76.726	44.324	44.324	39.678	4.359	.569
1.100	5.83E-02	96.187	96.187	52.520	52.520	42.298	4.292	.556
1.125	4.94E-02	122.229	122.229	62.790	62.790	45.370	4.222	.540
1.150	4.14E-02	157.797	157.797	76.233	76.233	49.018	4.153	.519
1.175	3.43E-02	207.635	207.635	94.501	94.501	53.411	4.083	.493
1.200	2.79E-02	279.704	279.704	120.499	120.499	58.791	4.013	.460
1.225	2.23E-02	388.153	388.153	159.680	159.680	65.511	3.934	.422
1.250	1.75E-02	559.954	559.954	223.178	223.178	74.095	3.820	.387
1.275	1.34E-02	851.467	851.467	336.237	336.237	85.342	3.576	.383

TABLE 17

FOUR SHOE TILTING PAD BEARING (L/D = 0.5, Offset = .500, m = 0.2, $\chi = 80^{\circ}$, LOAD BETWEEN PADS)
DIMENSIONLESS SYNCHRONOUS DYNAMIC DATA

ECC. (DIM)	SOMMERFELD (DIM)	$\bar{K}_{yy}$ (DIM)	$\bar{K}_{xx}$ (DIM)	$\bar{B}_{yy}$ (DIM)	$\bar{B}_{xx}$ (DIM)	$\bar{T}$ TORQUE (DIM)	$\bar{Q}$ REQUIRED (DIM)	$\bar{Q}$ LOSS (DIM)
.050	5.58E+00	1.682	1.682	5.233	5.233	21.764	5.646	1.018
.100	2.76E+00	1.770	1.770	5.318	5.318	21.840	5.639	1.006
.150	1.81E+00	1.921	1.921	5.464	5.464	21.968	5.628	.985
.200	1.32E+00	2.141	2.141	5.673	5.673	22.151	5.611	.953
.250	1.03E+00	2.443	2.443	5.952	5.952	22.389	5.591	.915
.300	8.18E-01	2.829	2.829	6.311	6.311	22.689	5.550	.836
.350	6.52E-01	3.310	3.310	6.761	6.761	23.054	5.475	.691
.400	5.52E-01	3.989	3.989	7.309	7.309	23.491	5.398	.631
.450	4.80E-01	4.867	4.867	7.976	7.976	24.008	5.319	.635
.500	4.15E-01	5.964	5.964	8.787	8.787	24.615	5.238	.637
.550	3.57E-01	7.351	7.351	9.775	9.775	25.325	5.156	.637
.600	3.06E-01	9.122	9.122	10.986	10.986	26.155	5.072	.636
.650	2.61E-01	11.413	11.413	12.474	12.474	27.124	4.987	.632
.700	2.21E-01	14.421	14.421	14.315	14.315	28.261	4.899	.626
.725	2.03E-01	16.283	16.283	15.403	15.403	28.904	4.855	.622
.750	1.86E-01	18.447	18.447	16.631	16.631	29.604	4.810	.617
.775	1.69E-01	20.974	20.974	18.025	18.025	30.365	4.765	.610
.800	1.54E-01	23.938	23.938	19.615	19.615	31.198	4.719	.603
.825	1.40E-01	27.433	27.433	21.443	21.443	32.109	4.673	.596
.850	1.27E-01	31.584	31.584	23.561	23.561	33.109	4.625	.593
.875	1.15E-01	36.530	36.530	26.027	26.027	34.211	4.577	.591
.900	1.03E-01	42.464	42.464	28.929	28.929	35.429	4.529	.590
.925	9.25E-02	49.635	49.635	32.399	32.399	36.779	4.479	.586
.950	8.26E-02	58.355	58.355	36.519	36.519	38.282	4.428	.581
.975	7.35E-02	69.039	69.039	41.420	41.420	39.964	4.377	.574
1.000	6.50E-02	82.252	82.252	47.261	47.261	41.856	4.325	.565
1.025	5.73E-02	98.773	98.773	54.074	54.074	43.996	4.271	.554
1.050	5.01E-02	119.657	119.657	62.297	62.297	46.433	4.216	.541
1.075	4.36E-02	146.409	146.409	72.472	72.472	49.231	4.161	.526
1.100	3.76E-02	181.215	181.215	85.354	85.354	52.470	4.105	.506
1.125	3.22E-02	227.346	227.346	102.111	102.111	56.257	4.050	.483
1.150	2.72E-02	289.847	289.847	124.615	124.615	60.736	3.993	.456
1.175	2.28E-02	376.813	376.813	156.018	156.018	66.101	3.930	.426
1.200	1.88E-02	501.843	501.843	201.907	201.907	72.621	3.848	.396
1.225	1.53E-02	689.127	689.127	272.871	272.871	80.670	3.712	.377
1.250	1.22E-02	984.884	984.884	390.668	390.668	90.767	3.422	.401

TABLE 18

FOUR SHOE TILTING PAD BEARING (L/D = 0.5, Offset = .500, m = 0.3, $\chi = 80^{o}$, LOAD BETWEEN PADS)
DIMENSIONLESS SYNCHRONOUS DYNAMIC DATA

ECC. (DIM)	SOMMERFELD (DIM)	$\bar{K}_{yy}$ (DIM)	$\bar{K}_{xx}$ (DIM)	$\bar{B}_{yy}$ (DIM)	$\bar{B}_{xx}$ (DIM)	$\bar{T}$ORQUE (DIM)	$\bar{Q}$ REQUIRED (DIM)	$\bar{Q}$ LOSS (DIM)
.050	4.25E+00	3.413	3.413	7.196	7.196	24.730	5.143	1.169
.100	2.11E+00	3.552	3.552	7.311	7.311	24.817	5.139	1.163
.150	1.38E+00	3.790	3.790	7.505	7.505	24.962	5.133	1.152
.200	1.02E+00	4.136	4.136	7.785	7.785	25.169	5.125	1.137
.250	7.91E-01	4.607	4.607	8.158	8.158	25.440	5.114	1.118
.300	6.38E-01	5.223	5.223	8.635	8.635	25.780	5.100	1.093
.350	5.25E-01	6.014	6.014	9.232	9.232	26.194	5.082	1.062
.400	4.39E-01	7.019	7.019	9.968	9.968	26.690	5.061	1.025
.450	3.69E-01	8.293	8.293	10.867	10.867	27.278	5.036	.981
.500	3.13E-01	9.909	9.909	11.962	11.962	27.967	5.007	.929
.550	2.64E-01	11.957	11.957	13.293	13.293	28.774	4.959	.840
.600	2.22E-01	14.578	14.578	14.913	14.913	29.718	4.883	.698
.650	1.89E-01	18.035	18.035	16.901	16.901	30.825	4.806	.618
.700	1.61E-01	22.607	22.607	19.386	19.386	32.124	4.727	.606
.725	1.48E-01	25.425	25.425	20.868	20.868	32.859	4.687	.599
.750	1.36E-01	28.688	28.688	22.549	22.549	33.658	4.646	.595
.775	1.25E-01	32.485	32.485	24.465	24.465	34.529	4.605	.592
.800	1.14E-01	36.917	36.917	26.658	26.658	35.481	4.563	.591
.825	1.04E-01	42.115	42.115	29.190	29.190	36.523	4.521	.590
.850	9.44E-02	48.249	48.249	32.157	32.157	37.666	4.477	.587
.875	8.55E-02	55.518	55.518	35.605	35.605	38.924	4.433	.582
.900	7.73E-02	64.183	64.183	39.619	39.619	40.313	4.389	.577
.925	6.96E-02	74.581	74.581	44.297	44.297	41.852	4.344	.570
.950	6.25E-02	87.151	87.151	49.728	49.728	43.565	4.298	.562
.975	5.56E-02	102.484	102.484	55.942	55.942	45.480	4.251	.552
1.000	4.97E-02	121.344	121.344	63.324	63.324	47.631	4.203	.540
1.025	4.39E-02	144.784	144.784	72.231	72.231	50.062	4.154	.526
1.050	3.87E-02	174.268	174.268	83.167	83.167	52.827	4.106	.510
1.075	3.38E-02	211.870	211.870	96.869	96.869	55.996	4.058	.491
1.100	2.93E-02	260.605	260.605	114.444	114.444	59.658	4.009	.468
1.125	2.52E-02	324.975	324.975	137.609	137.609	63.927	3.957	.443
1.150	2.15E-02	411.929	411.929	169.137	169.137	68.957	3.898	.416
1.175	1.81E-02	532.622	532.622	213.708	213.708	74.952	3.819	.391
1.200	1.50E-02	705.813	705.813	279.655	279.655	82.185	3.690	.377
1.225	1.24E-02	964.913	964.913	382.817	382.817	91.017	3.437	.398

TABLE 19

FOUR SHOE TILTING PAD BEARING (L/D = 0.5, Offset = .500, m = 0.5, $\chi = 80^{\circ}$, LOAD BETWEEN PADS)
DIMENSIONLESS SYNCHRONOUS DYNAMIC DATA

ECC. (DIM)	SOMMERFELD (DIM)	$\bar{K}_{yy}$ (DIM)	$\bar{K}_{xx}$ (DIM)	$\bar{B}_{yy}$ (DIM)	$\bar{B}_{xx}$ (DIM)	$\bar{T}$ TORQUE (DIM)	$\bar{Q}$ REQUIRED (DIM)	$\bar{Q}$ LOSS (DIM)
.050	2.02E+00	13.664	13.664	16.170	16.170	34.092	4.023	1.275
.100	1.00E+00	14.070	14.070	16.405	16.405	34.212	4.021	1.272
.150	6.61E-01	14.762	14.762	16.802	16.802	34.415	4.019	1.268
.200	4.87E-01	15.769	15.769	17.370	17.370	34.702	4.014	1.263
.250	3.80E-01	17.132	17.132	18.123	18.123	35.079	4.009	1.255
.300	3.07E-01	18.911	18.911	19.083	19.083	35.554	4.003	1.247
.350	2.53E-01	21.189	21.189	20.265	20.285	36.134	3.995	1.235
.400	2.12E-01	24.074	24.074	21.775	21.775	36.829	3.986	1.221
.450	1.79E-01	27.708	27.708	23.612	23.612	37.653	3.975	1.205
.500	1.53E-01	32.291	32.291	25.882	25.882	38.623	3.963	1.191
.550	1.30E-01	38.081	38.081	28.689	28.689	39.759	3.949	1.180
.600	1.11E-01	45.430	45.430	32.196	32.198	41.087	3.934	1.167
.650	9.49E-02	54.830	54.830	36.632	36.632	42.641	3.916	1.151
.700	8.08E-02	66.956	66.956	42.189	42.189	44.462	3.896	1.131
.725	7.45E-02	74.330	74.330	45.475	45.475	45.490	3.886	1.119
.750	6.85E-02	82.782	82.782	49.156	49.156	46.607	3.875	1.107
.775	6.30E-02	92.512	92.512	53.195	53.195	47.823	3.863	1.093
.800	5.76E-02	103.757	103.757	57.696	57.696	49.147	3.851	1.079
.825	5.30E-02	116.807	116.807	62.798	62.798	50.595	3.837	1.063
.850	4.84E-02	132.030	132.030	68.622	68.622	52.181	3.824	1.045
.875	4.41E-02	149.886	149.886	75.327	75.327	53.922	3.810	1.026
.900	4.01E-02	170.962	170.962	83.116	83.116	55.841	3.796	1.005
.925	3.64E-02	196.013	196.013	92.257	92.257	57.962	3.781	.982
.950	3.29E-02	226.020	226.020	103.106	103.106	60.315	3.767	.957
.975	2.96E-02	262.277	262.277	116.144	116.144	62.937	3.752	.930
1.000	2.66E-02	306.519	306.519	132.038	132.038	65.871	3.735	.902
1.025	2.37E-02	361.108	361.108	151.720	151.720	69.171	3.715	.871
1.050	2.11E-02	429.321	429.321	176.531	176.531	72.901	3.689	.840
1.075	1.86E-02	515.810	515.810	208.450	208.450	77.144	3.651	.809
1.100	1.63E-02	627.337	627.337	250.468	250.468	81.998	3.590	.782
1.125	1.43E-02	774.021	774.021	307.272	307.272	87.585	3.487	.766
1.150	1.24E-02	971.520	971.520	386.475	386.475	94.055	3.303	.771

TABLE 20

DYNAMIC DATA OF FIXED PAD (L/D = 1.00, Offset = .500, $\chi = 80^{\circ}$, LOAD ON PAD CENTER)

SOMERFELD	$\bar{K}_{\eta\eta}$	$-\bar{K}_{\eta\xi}$	$-\bar{K}_{\xi\eta}$	$\bar{K}_{\xi\xi}$	$\bar{B}_{\eta\eta}$	$\bar{B}_{\eta\xi}$	$\bar{B}_{\xi\eta}$	$\bar{B}_{\xi\xi}$
9.00000	.446229E-01	-.971322E-01	2.16846	.277880	.196387	-.447145E-01	-.447180E-01	4.33973
2.80000	.153441	-.113529	2.66765	.955250	.246456	-.156086	-.156097	5.36832
1.50000	.315522	-.141135	3.59338	1.96371	.342416	-.328667	-.328693	7.29312
1.10000	.459526	-.162871	4.40379	2.85966	.429322	-.487243	-.487281	8.99360
.850000	.633416	-.185595	5.34409	3.94169	.533146	-.683906	-.683959	10.9814
.700000	.808823	-.206400	6.25940	5.03380	.636968	-.887260	-.887328	12.9312
.540000	1.12672	-.239074	7.84794	7.01452	.822987	-1.26645	-1.26654	16.3430
.400000	1.66237	-.285112	10.3848	10.3571	1.13358	-1.93143	-1.93158	21.8544
.300000	2.42359	-.340379	13.8019	15.1197	1.57463	-2.92312	-2.92334	29.3799
.220000	3.65173	-.419509	19.0453	22.8369	2.29455	-4.61843	-4.61878	41.1117
.190000	4.43680	-.468753	22.2892	27.7920	2.76284	-5.75551	-5.75595	48.4634
.140000	6.66592	-.618119	31.2371	41.9582	4.13321	-9.18079	-9.18148	69.0519
.110000	9.12885	-.763021	41.0594	58.3175	5.68182	-13.1882	-13.2748	92.0580
.900000E-01	11.8295	-.928377	51.8224	76.8999	7.44269	-17.8520	-18.1012	117.699
.700000E-01	15.8567	-.740320	69.1883	109.916	9.88754	-24.6366	-25.8957	159.366
.550000E-01	20.8208	-.759209E-01	91.7145	156.215	12.8383	-33.1412	-36.3088	214.107
.330000E-01	36.6278	4.93884	169.827	340.324	21.9685	-61.2589	-73.4315	407.450
.270000E-01	45.7167	8.64954	218.471	467.462	27.5848	-79.5103	-97.7414	532.610
.150000E-01	88.3167	52.7276	471.760	1281.19	46.9004	-151.591	-204.014	1139.46

TABLE 21

STATIC DATA OF FIXED PAD (L/D = 1.0, Offset = .500, $\chi = 80^{\circ}$, LOAD ON PAD CENTER)

	ECC. (DIM)	ATTITUDE (DEG)	H PIVOT (DIM)	SOMMERFELD (DIM)	$\overline{\text{TORQUE}}$ (DIM)	$\overline{\text{Q}}$IN (DIM)	$\overline{\text{Q}}$AXIAL (DIM)
1	.05	77.00	.988	9.00E+00	4.437	1.569	.031
2	.16	57.62	.914	2.80E+00	4.779	1.481	.081
3	.26	46.14	.816	1.50E+00	5.320	1.347	.110
4	.33	41.35	.755	1.10E+00	5.727	1.259	.121
5	.36	37.93	.701	8.50E-01	6.145	1.179	.127
6	.42	35.65	.659	7.00E-01	6.512	1.116	.129
7	.47	32.99	.604	5.40E-01	7.077	1.031	.131
8	.53	30.36	.541	4.00E-01	7.850	.932	.130
9	.59	28.29	.483	3.00E-01	8.731	.839	.127
10	.64	26.40	.424	2.20E-01	9.858	.743	.120
11	.67	25.62	.398	1.90E-01	10.465	.699	.117
12	.72	24.22	.347	1.40E-01	11.911	.610	.108
13	.75	23.29	.310	1.10E-01	13.254	.544	.098
14	.76	22.62	.282	9.00E-02	14.536	.492	.087
15	.81	21.66	.249	7.00E-02	16.399	.429	.088
16	.84	21.17	.219	5.50E-02	18.516	.372	.085
17	.89	19.73	.165	3.30E-02	24.420	.261	.069
18	.90	19.13	.147	2.70E-02	27.433	.221	.055
19	.94	17.20	.102	1.50E-02	39.110	.120	.014

TABLE 22

FOUR SHOE TILTING PAD BEARING (L/D = 1.0, Offset = .500, m = 0.0, $\chi = 80^{\circ}$, LOAD BETWEEN PADS)
DIMENSIONLESS SYNCHRONOUS DYNAMIC DATA

ECC. (DIM)	SOMMERFELD (DIM)	$\bar{K}_{yy}$ (DIM)	$\bar{K}_{xx}$ (DIM)	$\bar{B}_{yy}$ (DIM)	$\bar{B}_{xx}$ (DIM)	$\bar{T}$ TORQUE (DIM)	$\bar{Q}$ REQUIRED (DIM)	$\bar{Q}$ LOSS (DIM)
.050	3.68E+00	.152	.152	6.279	6.279	17.568	6.320	.107
.100	2.29E+00	.308	.308	6.325	6.325	17.631	6.304	.146
.150	1.66E+00	.498	.498	6.432	6.432	17.736	6.278	.180
.200	1.33E+00	.727	.727	6.605	6.605	17.884	6.241	.203
.250	1.10E+00	1.007	1.007	6.849	6.849	18.077	6.197	.218
.300	9.14E-01	1.346	1.346	7.172	7.172	18.319	6.149	.231
.350	7.67E-01	1.762	1.762	7.586	7.586	18.613	6.096	.242
.400	6.48E-01	2.274	2.274	8.107	8.107	18.965	6.039	.250
.450	5.49E-01	2.909	2.909	8.754	8.754	19.379	5.977	.256
.500	4.66E-01	3.705	3.705	9.555	9.555	19.864	5.913	.260
.550	3.95E-01	4.710	4.710	10.544	10.544	20.429	5.844	.262
.600	3.35E-01	5.995	5.995	11.768	11.768	21.087	5.772	.262
.650	2.83E-01	7.655	7.655	13.288	13.288	21.855	5.697	.260
.700	2.37E-01	9.829	9.829	15.186	15.186	22.751	5.618	.256
.725	2.17E-01	11.168	11.168	16.311	16.311	23.256	5.578	.254
.750	1.98E-01	12.719	12.719	17.575	17.575	23.803	5.536	.251
.775	1.81E-01	14.522	14.522	19.000	19.000	24.399	5.494	.247
.800	1.64E-01	16.628	16.628	20.611	20.611	25.048	5.451	.243
.825	1.49E-01	19.103	19.103	22.437	22.437	25.758	5.407	.239
.850	1.35E-01	22.027	22.027	24.513	24.513	26.535	5.362	.233
.875	1.22E-01	25.501	25.501	26.874	26.874	27.390	5.316	.228
.900	1.10E-01	29.662	29.662	29.581	29.581	28.333	5.269	.222
.925	9.82E-02	34.687	34.687	32.709	32.709	29.379	5.221	.215
.950	8.77E-02	40.817	40.817	36.367	36.367	30.546	5.172	.206
.975	7.80E-02	48.347	48.347	40.637	40.637	31.853	5.122	.196
1.000	6.90E-02	57.679	57.679	45.591	45.591	33.327	5.070	.182
1.025	6.07E-02	69.421	69.421	51.669	51.669	35.001	5.017	.173
1.050	5.31E-02	84.391	84.391	59.369	59.369	36.918	4.963	.174
1.075	4.61E-02	103.608	103.608	68.947	68.947	39.130	4.906	.176
1.100	3.96E-02	128.599	128.599	80.910	80.910	41.707	4.849	.171
1.125	3.41E-02	161.652	161.652	96.251	96.251	44.747	4.789	.165
1.150	2.89E-02	206.303	206.303	116.007	116.007	48.377	4.728	.156
1.175	2.42E-02	268.185	268.185	141.478	141.478	52.776	4.666	.141
1.200	2.01E-02	356.727	356.727	173.949	173.949	58.198	4.602	.118
1.225	1.64E-02	487.713	487.713	219.293	219.293	65.018	4.538	.086
1.250	1.30E-02	690.257	690.257	289.562	289.562	73.800	4.473	.049
1.275	1.01E-02	1022.521	1022.521	413.568	413.568	85.394	4.395	.029

TABLE 23

FOUR SHOE TILTING PAD BEARING (L/D = 1.0, Offset = .500, m = 0.2, $\chi = 80^{\circ}$, LOAD BETWEEN PADS)
DIMENSIONLESS SYNCHRONOUS DYNAMIC DATA

ECC. (DIM)	SOMMERFELD (DIM)	$\bar{K}_{yy}$ (DIM)	$\bar{K}_{xx}$ (DIM)	$\bar{B}_{yy}$ (DIM)	$\bar{B}_{xx}$ (DIM)	$\bar{T}$ TORQUE (DIM)	$\bar{Q}$ REQUIRED (DIM)	$\bar{Q}$ LOSS (DIM)
.050	3.34E+00	2.488	2.488	9.817	9.617	21.719	5.295	.453
.100	1.66E+00	2.625	2.625	9.967	9.967	21.793	5.293	.449
.150	1.08E+00	2.859	2.859	10.224	10.224	21.919	5.286	.438
.200	7.88E-01	3.200	3.200	10.595	10.595	22.097	5.276	.419
.250	6.07E-01	3.662	3.662	11.090	11.090	22.330	5.261	.391
.300	4.84E-01	4.266	4.266	11.723	11.723	22.623	5.240	.354
.350	3.96E-01	5.035	5.035	12.503	12.503	22.979	5.215	.313
.400	3.32E-01	6.078	6.078	13.437	13.437	23.407	5.186	.279
.450	2.90E-01	7.390	7.390	14.567	14.567	23.912	5.152	.261
.500	2.52E-01	9.014	9.014	15.936	15.936	24.504	5.115	.258
.550	2.19E-01	11.045	11.045	17.595	17.595	25.197	5.074	.254
.600	1.89E-01	13.611	13.611	19.613	19.613	26.005	5.029	.249
.650	1.63E-01	16.890	16.890	22.079	22.079	26.948	4.981	.243
.700	1.39E-01	21.138	21.138	25.110	25.110	28.052	4.929	.235
.725	1.28E-01	23.735	23.735	26.882	26.882	28.675	4.901	.231
.750	1.18E-01	26.725	26.725	28.854	28.854	29.353	4.873	.226
.775	1.08E-01	30.186	30.186	31.061	31.061	30.091	4.844	.221
.800	9.92E-02	34.213	34.213	33.544	33.544	30.896	4.814	.215
.825	9.06E-02	38.934	38.934	36.364	36.364	31.778	4.783	.209
.850	8.26E-02	44.488	44.488	39.558	39.558	32.747	4.751	.201
.875	7.51E-02	51.056	51.056	43.161	43.161	33.815	4.718	.192
.900	6.80E-02	58.879	58.879	47.254	47.254	34.997	4.683	.181
.925	6.14E-02	68.292	68.292	52.103	52.103	36.311	4.648	.173
.950	5.52E-02	79.723	79.723	57.988	57.988	37.777	4.612	.173
.975	4.94E-02	93.656	93.656	65.027	65.027	39.422	4.574	.177
1.000	4.41E-02	110.735	110.735	73.372	73.372	41.278	4.535	.175
1.025	3.91E-02	131.900	131.900	83.405	83.405	43.386	4.495	.170
1.050	3.46E-02	158.405	158.405	95.700	95.700	45.797	4.454	.165
1.075	3.03E-02	192.058	192.058	110.745	110.745	48.578	4.411	.159
1.100	2.65E-02	235.465	235.465	129.181	129.181	51.813	4.368	.149
1.125	2.29E-02	292.505	292.505	151.684	151.684	55.616	4.323	.135
1.150	1.96E-02	369.092	369.092	179.169	179.169	60.137	4.277	.115
1.175	1.67E-02	474.138	474.138	215.489	215.489	65.583	4.231	.089
1.200	1.40E-02	622.373	622.373	266.567	266.567	72.243	4.185	.059
1.225	1.15E-02	839.093	839.093	344.252	344.252	80.517	4.135	.033
1.250	9.26E-03	1170.581	1170.581	474.391	474.391	90.955	4.063	.036

TABLE 24

FOUR SHOE TILTING PAD BEARING (L/D = 1.0, Offset = .500, m = 0.3, $\chi = 80^{\circ}$, LOAD BETWEEN PADS)
DIMENSIONLESS SYNCHRONOUS DYNAMIC DATA

ECC. (DIM)	SUMMERFELD (DIM)	$\bar{K}_{yy}$ (DIM)	$\bar{K}_{xx}$ (DIM)	$\bar{B}_{yy}$ (DIM)	$\bar{B}_{xx}$ (DIM)	$\bar{T}$ORQUE (DIM)	$\bar{Q}$ REQUIRED (DIM)	$\bar{Q}$ LOSS (DIM)
.050	2.58E+00	5.198	5.198	13.281	13.281	24.644	4.709	.506
.100	1.28E+00	5.405	5.405	13.477	13.477	24.728	4.707	.503
.150	8.40E-01	5.760	5.760	13.809	13.809	24.870	4.704	.497
.200	6.18E-01	6.277	6.277	14.286	14.286	25.071	4.699	.489
.250	4.83E-01	6.976	6.976	14.921	14.921	25.336	4.692	.480
.300	3.91E-01	7.886	7.886	15.731	15.731	25.667	4.685	.469
.350	3.23E-01	9.049	9.049	16.742	16.742	26.070	4.675	.454
.400	2.70E-01	10.518	10.518	17.982	17.982	26.553	4.662	.433
.450	2.28E-01	12.365	12.365	19.493	19.493	27.123	4.645	.406
.500	1.94E-01	14.689	14.689	21.323	21.323	27.793	4.624	.371
.550	1.65E-01	17.620	17.620	23.536	23.536	28.577	4.599	.330
.600	1.40E-01	21.339	21.339	26.206	26.206	29.492	4.570	.287
.650	1.20E-01	26.158	26.158	29.417	29.417	30.563	4.537	.250
.700	1.03E-01	32.410	32.410	33.335	33.335	31.820	4.500	.218
.725	9.53E-02	36.226	36.226	35.633	35.633	32.531	4.480	.213
.750	8.80E-02	40.618	40.618	38.202	38.202	33.304	4.460	.206
.775	8.11E-02	45.689	45.689	41.070	41.070	34.147	4.438	.199
.800	7.45E-02	51.567	51.567	44.252	44.252	35.069	4.415	.191
.825	6.84E-02	58.420	58.420	47.820	47.820	36.080	4.391	.181
.850	6.25E-02	66.471	66.471	51.945	51.945	37.192	4.367	.174
.875	5.70E-02	76.010	76.010	56.857	56.857	38.418	4.341	.173
.900	5.19E-02	87.335	87.335	62.610	62.610	39.775	4.314	.175
.925	4.70E-02	100.835	100.835	69.305	69.305	41.283	4.286	.176
.950	4.25E-02	117.032	117.032	77.117	77.117	42.965	4.257	.174
.975	3.82E-02	136.628	136.628	86.333	86.333	44.853	4.227	.170
1.000	3.43E-02	160.535	160.535	97.370	97.370	46.982	4.195	.165
1.025	3.06E-02	190.022	190.022	110.539	110.539	49.399	4.163	.159
1.050	2.71E-02	226.830	226.830	126.272	126.272	52.160	4.130	.151
1.075	2.39E-02	273.414	273.414	145.079	145.079	55.337	4.096	.140
1.100	2.10E-02	333.378	333.378	167.173	167.173	59.026	4.060	.124
1.125	1.83E-02	411.728	411.728	194.648	194.648	63.348	4.024	.104
1.150	1.58E-02	516.088	516.088	230.500	230.500	68.467	3.988	.080
1.175	1.35E-02	658.404	658.404	279.779	279.779	74.601	3.952	.054
1.200	1.13E-02	858.125	858.125	351.927	351.927	82.042	3.911	.032
1.225	9.37E-03	1148.562	1148.562	465.859	465.859	91.173	3.852	.034

TABLE 25

FOUR SHOE TILTING PAD BEARING (L/D = 1.0, Offset = .500, m = 0.5, $\chi = 80^{\circ}$, LOAD BETWEEN PADS)
DIMENSIONLESS SYNCHRONOUS DYNAMIC DATA

ECC. (DIM)	SOMMERFELD (DIM)	$\bar{K}_{yy}$ (DIM)	$\bar{K}_{xx}$ (DIM)	$\bar{B}_{yy}$ (DIM)	$\bar{B}_{xx}$ (DIM)	$\bar{T}$ TORQUE (DIM)	$\bar{Q}$ REQUIRED (DIM)	$\bar{Q}$ LOSS (DIM)
.050	1.30E+00	20.567	20.567	28.715	28.715	33.831	3.466	.511
.100	6.45E-01	21.133	21.133	29.095	29.095	33.947	3.466	.510
.150	4.25E-01	22.098	22.098	29.738	29.738	34.143	3.464	.507
.200	3.13E-01	23.497	23.497	30.658	30.658	34.420	3.461	.504
.250	2.45E-01	25.382	25.382	31.876	31.876	34.785	3.457	.499
.300	1.99E-01	27.627	27.627	33.420	33.420	35.242	3.452	.494
.350	1.65E-01	30.930	30.930	35.322	35.322	35.801	3.446	.488
.400	1.39E-01	34.627	34.627	37.641	37.641	36.471	3.438	.480
.450	1.18E-01	39.705	39.705	40.457	40.457	37.265	3.430	.471
.500	1.01E-01	45.811	45.811	43.866	43.866	38.201	3.421	.460
.550	8.65E-02	53.460	53.460	47.937	47.937	39.298	3.410	.446
.600	7.43E-02	63.094	63.094	52.811	52.811	40.586	3.397	.430
.650	6.39E-02	75.389	75.389	59.010	59.010	42.097	3.384	.420
.700	5.48E-02	91.197	91.197	66.930	66.930	43.875	3.368	.419
.725	5.07E-02	100.751	100.751	71.613	71.613	44.861	3.360	.417
.750	4.68E-02	111.643	111.643	76.852	76.852	45.977	3.351	.413
.775	4.32E-02	124.116	124.116	82.747	82.747	47.173	3.342	.408
.800	3.98E-02	138.451	138.451	89.418	89.418	48.460	3.333	.403
.825	3.67E-02	154.993	154.993	97.038	97.038	49.912	3.322	.396
.850	3.37E-02	174.186	174.186	105.695	105.695	51.486	3.312	.389
.875	3.09E-02	196.580	196.580	115.536	115.536	53.220	3.300	.381
.900	2.83E-02	222.873	222.873	126.729	126.729	55.137	3.289	.372
.925	2.58E-02	253.957	253.957	139.459	139.459	57.262	3.278	.362
.950	2.35E-02	291.001	291.001	153.859	153.859	59.627	3.266	.349
.975	2.13E-02	335.547	335.547	169.993	169.993	62.271	3.253	.334
1.000	1.93E-02	389.475	389.475	188.943	188.943	65.241	3.240	.316
1.025	1.74E-02	455.394	455.394	211.666	211.666	68.593	3.227	.295
1.050	1.56E-02	536.865	536.865	239.577	239.577	72.397	3.214	.272
1.075	1.39E-02	638.831	638.831	274.832	274.832	76.740	3.201	.247
1.100	1.23E-02	768.319	768.319	320.813	320.813	81.729	3.185	.224
1.125	1.08E-02	935.564	935.564	383.012	383.012	87.492	3.165	.206
1.150	9.38E-03	1155.922	1155.922	470.697	470.697	94.187	3.131	.204

TABLE 26

DYNAMIC DATA OF FIXED PAD (L/D = 0.25, Offset = .500, $\chi = 55^{o}$, LOAD ON PAD CENTER)

SOMERFELD	$\bar{K}_{\eta\eta}$	$-\bar{K}_{\eta\xi}$	$-\bar{K}_{\xi\eta}$	$\bar{K}_{\xi\xi}$	$\bar{B}_{\eta\eta}$	$\bar{B}_{\eta\xi}$	$\bar{B}_{\xi\eta}$	$\bar{B}_{\xi\xi}$
100.000	.260759E-02	-.910499E-02	.237831	.278423E-01	.183356E-01	-.260879E-02	-.260882E-02	.475580
40.0000	.668823E-02	-.962101E-02	.258043	.714691E-01	.199062E-01	-.670798E-02	-.670809E-02	.515808
20.0000	.142418E-01	-.109548E-01	.314892	.152492	.243313E-01	-.143751E-01	-.143754E-01	.628883
16.0000	.183899E-01	-.116788E-01	.349141	.197122	.270020E-01	-.186264E-01	-.186267E-01	.696954
12.0000	.258122E-01	-.128470E-01	.410881	.277178	.318248E-01	-.262930E-01	-.262935E-01	.819571
9.00000	.365823E-01	-.142682E-01	.498997	.393723	.387256E-01	-.375326E-01	-.375330E-01	.994436
7.00000	.499265E-01	-.156653E-01	.604817	.538638	.470381E-01	-.516138E-01	-.516144E-01	1.20430
5.00000	.762912E-01	-.175222E-01	.804397	.826263	.627818E-01	-.798347E-01	-.798357E-01	1.59978
3.50000	.120670	-.187539E-01	1.12061	1.31337	.878768E-01	-.128254	-.128256	2.22560
2.70000	.169150	-.183920E-01	1.44849	1.84879	.114067	-.182172	-.182175	2.87397
2.00000	.250827	-.151837E-01	1.97559	2.75681	.156479	-.274897	-.274902	3.91573
1.50000	.366907	-.698390E-02	2.69142	4.05742	.214603	-.409906	-.409913	5.33020
1.20000	.493509	.517797E-02	3.44460	5.48672	.276326	-.560630	-.560638	6.81881
1.00000	.629210	.208198E-01	4.23102	7.02903	.341317	-.725545	-.725555	8.37388
.800000	.847670	.500060E-01	5.46669	9.53066	.444432	-.997206	-.997221	10.8196
.500000	1.59069	.170966	9.51816	18.1717	.789624	-1.96565	-1.96568	18.8626
.300000	3.14728	.482608	17.7358	36.8781	1.50837	-4.14544	-4.15207	35.2872
.220000	4.67033	.868760	25.9264	56.8456	2.19449	-6.36386	-6.43376	51.7783
.100000	11.5382	3.95798	67.2299	174.759	4.95850	-16.3703	-17.7411	135.716
.600000E-01	20.2301	9.74113	125.324	366.965	8.20066	-29.4680	-33.6872	256.166

TABLE 27

STATIC DATA OF FIXED PAD (L/D = 0.25, Offset = .500, $\chi = 55^{o}$, LOAD ON PAD CENTER)

	ECC. (DIM)	ATTITUDE (DEG)	H PIVOT (DIM)	SOMMERFELD (DIM)	$\overline{\text{TORQUE}}$ (DIM)	$\overline{\text{Q}}$IN (DIM)	$\overline{\text{Q}}$AXIAL (DIM)
1	.04	81.85	.994	1.00E+02	3.034	1.583	.043
2	.10	71.36	.967	4.00E+01	3.116	1.572	.099
3	.19	59.39	.905	2.00E+01	3.328	1.511	.163
4	.22	55.38	.874	1.60E+01	3.443	1.476	.185
5	.27	50.44	.827	1.20E+01	3.633	1.421	.211
6	.32	45.90	.775	9.00E+00	3.873	1.354	.233
7	.37	42.33	.727	7.00E+00	4.126	1.291	.249
8	.43	38.15	.660	5.00E+00	4.533	1.200	.266
9	.50	34.39	.590	3.50E+00	5.055	1.102	.277
10	.54	32.02	.541	2.70E+00	5.501	1.032	.282
11	.59	29.62	.488	2.00E+00	6.092	.953	.284
12	.63	27.61	.439	1.50E+00	6.744	.880	.283
13	.66	26.21	.404	1.20E+00	7.314	.826	.281
14	.69	25.17	.377	1.00E+00	7.825	.784	.279
15	.72	24.00	.346	8.00E-01	8.514	.735	.275
16	.77	21.87	.286	5.00E-01	10.220	.641	.264
17	.82	19.99	.232	3.00E-01	12.557	.551	.251
18	.84	19.01	.203	2.20E-01	14.281	.502	.243
19	.90	16.84	.143	1.00E-01	20.122	.394	.224
20	.92	15.55	.112	6.00E-02	25.452	.335	.207

TABLE 28

FIVE SHOE TILTING PAD BEARING (L/D = 0.25, Offset = .500, m = 0.0, $\chi = 55^{o}$, LOAD ON PAD)
DIMENSIONLESS SYNCHRONOUS DYNAMIC DATA

ECC. (DIM)	SOMMERFELD (DIM)	$\bar{\bar{K}}_{yy}$ (DIM)	$\bar{\bar{K}}_{xx}$ (DIM)	$\bar{\bar{B}}_{yy}$ (DIM)	$\bar{\bar{B}}_{xx}$ (DIM)	$\bar{T}$ORQUE (DIM)	$\bar{Q}$ REQUIRED (DIM)	$\bar{Q}$ LOSS (DIM)
.050	2.35E+01	.037	.052	.876	.880	15.097	7.924	.254
.100	1.50E+01	.060	.095	.880	.899	15.153	7.886	.358
.150	1.08E+01	.082	.150	.887	.934	15.247	7.834	.438
.200	8.30E+00	.103	.223	.897	.989	15.382	7.770	.498
.250	6.51E+00	.125	.320	.910	1.069	15.561	7.697	.544
.300	5.16E+00	.148	.455	.926	1.182	15.790	7.618	.580
.350	4.09E+00	.174	.644	.945	1.340	16.074	7.536	.613
.400	3.23E+00	.202	.916	.968	1.560	16.424	7.450	.642
.450	2.53E+00	.232	1.317	.994	1.866	16.854	7.361	.666
.500	1.95E+00	.266	1.926	1.024	2.307	17.381	7.268	.686
.550	1.48E+00	.302	2.888	1.057	2.947	18.035	7.172	.702
.600	1.10E+00	.342	4.473	1.094	3.913	18.858	7.074	.714
.650	7.87E-01	.385	7.238	1.135	5.430	19.915	6.972	.723
.700	5.41E-01	.433	12.417	1.181	7.942	21.318	6.867	.727
.725	4.39E-01	.459	16.739	1.206	9.828	22.206	6.813	.728
.750	3.51E-01	.486	23.117	1.232	12.389	23.267	6.758	.727
.775	2.74E-01	.515	32.873	1.259	15.998	24.559	6.703	.726
.800	2.09E-01	.544	48.427	1.288	21.328	26.168	6.646	.724
.825	1.54E-01	.576	74.476	1.317	29.807	28.226	6.587	.722
.850	1.10E-01	.609	120.708	1.349	43.914	30.954	6.528	.718
.875	7.45E-02	.643	209.935	1.382	69.033	34.737	6.468	.713
.900	4.71E-02	.680	404.962	1.416	118.427	40.320	6.390	.695
.925	2.70E-02	.718	924.620	1.452	231.866	49.302	6.151	.603

TABLE 29

FIVE SHOE TILTING PAD BEARING (L/D = 0.25, Offset = .500, m = 0.200, $\chi = 55^{\circ}$, LOAD ON PAD)
DIMENSIONLESS SYNCHRONOUS DYNAMIC DATA

ECC. (DIM)	SOMMERFELD (DIM)	$\bar{K}_{yy}$ (DIM)	$\bar{K}_{xx}$ (DIM)	$\bar{B}_{yy}$ (DIM)	$\bar{B}_{xx}$ (DIM)	$\bar{T}$ORQUE (DIM)	$\bar{Q}$ REQUIRED (DIM)	$\bar{Q}$ LOSS (DIM)
.050	1.87E+01	.534	.544	1.489	1.498	18.797	6.930	1.112
.100	9.18E+00	.547	.592	1.501	1.541	18.865	6.923	1.098
.150	5.94E+00	.569	.679	1.522	1.618	18.981	6.911	1.075
.200	4.29E+00	.597	.814	1.549	1.733	19.148	6.895	1.044
.250	3.22E+00	.632	1.009	1.583	1.896	19.369	6.864	.983
.300	2.45E+00	.669	1.285	1.624	2.120	19.650	6.805	.864
.350	1.96E+00	.722	1.700	1.670	2.423	20.001	6.740	.789
.400	1.61E+00	.788	2.311	1.722	2.835	20.434	6.672	.797
.450	1.30E+00	.860	3.201	1.779	3.402	20.965	6.602	.802
.500	1.03E+00	.939	4.536	1.841	4.199	21.617	6.529	.805
.550	8.02E-01	1.024	6.615	1.911	5.345	22.427	6.453	.806
.600	6.07E-01	1.118	9.997	1.986	7.049	23.446	6.375	.806
.650	4.44E-01	1.221	15.820	2.069	9.676	24.757	6.295	.802
.700	3.11E-01	1.333	26.597	2.160	13.947	26.502	6.212	.797
.725	2.55E-01	1.393	35.508	2.208	17.161	27.608	6.170	.793
.750	2.06E-01	1.456	48.523	2.258	21.593	28.931	6.126	.789
.775	1.62E-01	1.523	68.176	2.311	28.032	30.543	6.081	.785
.800	1.25E-01	1.592	98.896	2.366	37.613	32.547	6.035	.780
.825	9.40E-02	1.665	149.248	2.424	52.431	35.107	5.990	.775
.850	6.80E-02	1.741	237.210	2.484	76.555	38.486	5.942	.767
.875	4.69E-02	1.822	405.082	2.547	118.692	43.147	5.879	.748
.900	3.04E-02	1.906	769.538	2.612	200.136	49.946	5.725	.688

TABLE 30

FIVE SHOE TILTING PAD BEARING (L/D = 0.25, Offset = .500, m = 0.300, $\chi = 55^{o}$, LOAD ON PAD)
DIMENSIONLESS SYNCHRONOUS DYNAMIC DATA

ECC. (DIM)	SOMMERFELD (DIM)	$\bar{K}_{yy}$ (DIM)	$\bar{K}_{xx}$ (DIM)	$\bar{B}_{yy}$ (DIM)	$\bar{B}_{xx}$ (DIM)	$\bar{T}$ORQUE (DIM)	$\bar{Q}$ REQUIRED (DIM)	$\bar{Q}$ LOSS (DIM)
.050	1.37E+01	1.106	1.123	2.101	2.114	21.425	6.273	1.281
.100	6.77E+00	1.128	1.202	2.118	2.175	21.502	6.270	1.275
.150	4.40E+00	1.163	1.343	2.147	2.283	21.634	6.264	1.264
.200	3.18E+00	1.211	1.563	2.185	2.445	21.823	6.256	1.248
.250	2.42E+00	1.270	1.884	2.233	2.674	22.074	6.245	1.227
.300	1.69E+00	1.340	2.344	2.290	2.990	22.394	6.231	1.199
.350	1.49E+00	1.421	3.000	2.356	3.419	22.793	6.213	1.164
.400	1.19E+00	1.514	3.945	2.432	4.004	23.284	6.193	1.126
.450	9.41E-01	1.618	5.330	2.516	4.807	23.887	6.162	1.066
.500	7.30E-01	1.731	7.406	2.610	5.931	24.629	6.111	.965
.550	5.67E-01	1.857	10.635	2.713	7.535	25.549	6.045	.842
.600	4.33E-01	2.011	15.904	2.826	9.892	26.709	5.980	.821
.650	3.20E-01	2.179	24.918	2.948	13.493	28.203	5.913	.815
.700	2.26E-01	2.363	41.477	3.081	19.399	30.193	5.843	.807
.725	1.86E-01	2.461	55.039	3.151	23.939	31.455	5.806	.802
.750	1.51E-01	2.564	74.686	3.225	30.284	32.965	5.769	.798
.775	1.20E-01	2.671	103.984	3.302	39.333	34.802	5.730	.793
.800	9.33E-02	2.784	149.366	3.382	52.644	37.084	5.692	.787
.825	7.06E-02	2.902	223.223	3.465	73.018	39.992	5.653	.780
.850	5.15E-02	3.027	351.566	3.553	105.874	43.821	5.604	.766
.875	3.60E-02	3.157	595.669	3.643	162.773	49.071	5.513	.730

TABLE 31

FIVE SHOE TILTING PAD BEARING (L/D = 0.25, Offset = .500, m = 0.50, $\chi = 55^{\circ}$, LOAD ON PAD)
DIMENSIONLESS SYNCHRONOUS DYNAMIC DATA

ECC. (DIM)	SOMMERFELD (DIM)	$\bar{K}_{yy}$ (DIM)	$\bar{K}_{xx}$ (DIM)	$\bar{B}_{yy}$ (DIM)	$\bar{B}_{xx}$ (DIM)	$\bar{T}$ORQUE (DIM)	$\bar{Q}$ REQUIRED (DIM)	$\bar{Q}$ LOSS (DIM)
.050	6.03E+00	4.772	4.826	5.115	5.147	29.760	4.854	1.416
.100	2.97E+00	4.844	5.084	5.157	5.292	29.867	4.853	1.414
.150	1.93E+00	4.960	5.542	5.225	5.547	30.049	4.850	1.410
.200	1.40E+00	5.116	6.248	5.317	5.931	30.310	4.847	1.404
.250	1.07E+00	5.310	7.273	5.431	6.472	30.657	4.843	1.397
.300	8.38E-01	5.540	8.730	5.567	7.211	31.099	4.838	1.388
.350	6.67E-01	5.808	10.790	5.724	8.206	31.650	4.832	1.377
.400	5.33E-01	6.112	13.727	5.903	9.552	32.330	4.824	1.364
.450	4.25E-01	6.455	17.988	6.103	11.373	33.165	4.816	1.349
.500	3.36E-01	6.838	24.322	6.325	13.881	34.194	4.806	1.333
.550	2.62E-01	7.263	34.048	6.570	17.447	35.473	4.796	1.314
.600	2.00E-01	7.733	49.586	6.839	22.744	37.089	4.783	1.293
.650	1.49E-01	8.252	75.632	7.132	31.198	39.173	4.768	1.271
.700	1.06E-01	8.824	121.872	7.452	45.288	41.944	4.751	1.246
.725	8.85E-02	9.131	158.713	7.622	55.925	43.698	4.743	1.233
.750	7.26E-02	9.453	211.120	7.800	70.399	45.789	4.734	1.218
.775	5.86E-02	9.791	288.166	7.985	90.617	48.323	4.721	1.200
.800	4.63E-02	10.146	406.179	8.178	119.792	51.453	4.698	1.175
.825	3.57E-02	10.518	596.646	8.379	163.657	55.406	4.644	1.135

TABLE 32

DYNAMIC DATA OF FIXED PAD (L/D = .50, Offset = .500, $\chi = 55^{\circ}$, LOAD ON PAD CENTER)

SOMERFELD	$\bar{K}_{\eta\eta}$	$-\bar{K}_{\eta\xi}$	$-\bar{K}_{\xi\eta}$	$\bar{K}_{\xi\xi}$	$\bar{B}_{\eta\eta}$	$\bar{B}_{\eta\xi}$	$\bar{B}_{\xi\eta}$	$\bar{B}_{\xi\xi}$
30.0000	.704416E-02	-.141660E-01	.581880	.931492E-01	.287290E-01	-.705266E-02	-.705288E-02	1.16403
10.0000	.227242E-01	-.164539E-01	.727323	.300653	.361657E-01	-.229141E-01	-.229149E-01	1.45739
5.00000	.510610E-01	-.205042E-01	1.04105	.676214	.524192E-01	-.521440E-01	-.521456E-01	2.09222
3.80000	.715342E-01	-.226762E-01	1.26008	.947871	.639137E-01	-.735924E-01	-.735945E-01	2.53670
3.00000	.961158E-01	-.247385E-01	1.51309	1.27435	.773202E-01	-.996325E-01	-.996357E-01	3.05143
2.50000	.121068	-.263054E-01	1.76006	1.60603	.905269E-01	-.126332	-.126336	3.55501
2.00000	.161263	-.278846E-01	2.14111	2.14078	.111113	-.169810	-.169816	4.33373
1.50000	.234114	-.289121E-01	2.79587	3.11133	.147003	-.249858	-.249865	5.67674
1.00000	.399109	-.252098E-01	4.17112	5.31414	.224169	-.435668	-.435681	8.51321
.700000	.641322	-.112814E-01	6.04084	8.55714	.332202	-.716978	-.717000	12.3971
.550000	.885670	.886879E-02	7.82382	11.8375	.437967	-1.00872	-1.00875	16.1248
.400000	1.35932	.583698E-01	11.1071	18.2167	.638502	-1.59213	-1.59217	23.0387
.350000	1.62767	.904550E-01	12.9000	21.8411	.750746	-1.93147	-1.93152	26.8376
.280000	2.20100	.165345	16.6220	29.6064	.989113	-2.67450	-2.67458	34.7693
.200000	3.47318	.349467	24.5460	46.9277	1.51710	-4.39644	-4.39657	51.8277
.150000	5.13344	.605901	34.4919	69.6925	2.21261	-6.76732	-6.76752	73.5122
.900000E-01	10.1957	1.45154	63.9228	141.314	4.38172	-14.5773	-14.6582	138.989
.600000E-01	16.9039	3.10777	104.398	249.901	7.19129	-25.3536	-26.3088	230.863
.280000E-01	40.9240	14.0177	264.645	755.304	16.8357	-65.8969	-75.4190	606.354

TABLE 33

STATIC DATA OF FIXED PAD (L/D = 0.5, Offset = .500, $\chi = 55^{o}$, LOAD ON PAD CENTER)

	ECC. (DIM)	ATTITUDE (DEG)	H PIVOT (DIM)	SOMMERFELD (DIM)	$\bar{T}$ORQUE (DIM)	$\bar{Q}$IN (DIM)	$\bar{Q}$AXIAL (DIM)
1	.06	75.94	.986	3.00E+01	3.059	1.567	.036
2	.16	57.61	.912	1.00E+01	3.300	1.479	.086
3	.28	45.12	.805	5.00E+00	3.729	1.332	.119
4	.33	40.98	.753	3.80E+00	3.980	1.257	.129
5	.37	37.80	.706	3.00E+00	4.237	1.189	.136
6	.41	35.60	.669	2.50E+00	4.463	1.135	.140
7	.45	33.18	.624	2.00E+00	4.773	1.068	.143
8	.50	30.44	.568	1.50E+00	5.232	.983	.146
9	.57	27.20	.492	1.00E+00	6.007	.866	.146
10	.63	24.84	.431	7.00E-01	6.830	.770	.143
11	.66	23.45	.392	5.50E-01	7.474	.708	.140
12	.71	21.83	.345	4.00E-01	8.449	.632	.134
13	.72	21.22	.327	3.50E-01	8.905	.602	.132
14	.75	20.28	.298	2.80E-01	9.738	.554	.127
15	.79	19.02	.258	2.00E-01	11.182	.486	.119
16	.81	18.09	.227	1.50E-01	12.628	.434	.112
17	.86	16.72	.180	9.00E-02	15.802	.350	.098
18	.89	15.83	.148	6.00E-02	19.048	.291	.090
19	.93	14.33	.100	2.80E-02	27.825	.197	.073

TABLE 34

FIVE SHOE TILTING PAD BEARING (L/D = 0.5, m = 0.0, $\chi = 55^{o}$, LOAD ON PAD)
DIMENSIONLESS SYNCHRONOUS DYNAMIC DATA

ECC. (DIM)	SOMMERFELD (DIM)	$\bar{K}_{yy}$ (DIM)	$\bar{K}_{xx}$ (DIM)	$\bar{B}_{yy}$ (DIM)	$\bar{B}_{xx}$ (DIM)	$\bar{T}$ORQUE (DIM)	$\bar{Q}$ REQUIRED (DIM)	$\bar{Q}$ LOSS (DIM)
.050	1.15E+01	.054	.080	2.085	2.087	15.097	7.905	.142
.100	7.10E+00	.088	.164	2.089	2.121	15.153	7.885	.189
.150	5.14E+00	.126	.273	2.099	2.193	15.247	7.853	.230
.200	3.96E+00	.166	.418	2.117	2.313	15.381	7.811	.261
.250	3.10E+00	.209	.614	2.143	2.469	15.559	7.763	.289
.300	2.45E+00	.256	.882	2.175	2.739	15.786	7.709	.312
.350	1.95E+00	.307	1.259	2.216	3.088	16.068	7.649	.332
.400	1.55E+00	.363	1.796	2.264	3.573	16.414	7.583	.347
.450	1.22E+00	.424	2.583	2.319	4.251	16.839	7.513	.359
.500	9.46E-01	.490	3.708	2.384	5.213	17.360	7.438	.367
.550	7.23E-01	.562	5.616	2.457	6.610	18.005	7.359	.372
.600	5.41E-01	.642	8.619	2.539	8.698	18.814	7.275	.375
.650	3.92E-01	.729	13.761	2.630	11.946	19.852	7.189	.376
.700	2.74E-01	.825	23.169	2.731	17.262	21.224	7.099	.375
.725	2.25E-01	.877	30.853	2.786	21.224	22.090	7.052	.373
.750	1.81E-01	.931	41.987	2.844	26.550	23.122	7.005	.371
.775	1.44E-01	.988	58.662	2.904	33.877	24.375	6.956	.368
.800	1.11E-01	1.048	84.699	2.967	44.202	25.931	6.905	.363
.825	8.39E-02	1.111	127.298	3.034	59.717	27.921	6.854	.356
.850	6.09E-02	1.177	201.360	3.104	84.823	30.564	6.800	.354
.875	4.23E-02	1.246	339.767	3.177	128.185	34.251	6.747	.350
.900	2.77E-02	1.319	629.183	3.253	211.171	39.768	6.686	.341
.925	1.67E-02	1.396	1353.957	3.334	397.245	48.972	6.517	.271

TABLE 35

FIVE SHOE TILTING PAD BEARING (L/D = 0.5, Offset = .500, m = 0.2, $\chi = 55^{o}$, LOAD ON PAD)
DIMENSIONLESS SYNCHRONOUS DYNAMIC DATA

ECC. (DIM)	SOMMERFELD (DIM)	$\bar{K}_{yy}$ (DIM)	$\bar{K}_{xx}$ (DIM)	$\bar{B}_{yy}$ (DIM)	$\bar{B}_{xx}$ (DIM)	$\bar{T}$ORQUE (DIM)	$\bar{Q}$ REQUIRED (DIM)	$\bar{Q}$ LOSS (DIM)
.050	9.06E+00	1.010	1.031	3.432	3.454	18.776	6.626	.601
.100	4.44E+00	1.037	1.128	3.461	3.551	18.843	6.623	.595
.150	2.86E+00	1.081	1.300	3.507	3.723	18.958	6.615	.579
.200	2.04E+00	1.138	1.567	3.570	3.982	19.122	6.602	.553
.250	1.54E+00	1.209	1.957	3.648	4.347	19.340	6.584	.517
.300	1.19E+00	1.293	2.514	3.741	4.845	19.618	6.559	.474
.350	9.45E-01	1.403	3.332	3.842	5.508	19.964	6.529	.438
.400	7.79E-01	1.535	4.514	3.955	6.407	20.391	6.494	.418
.450	6.34E-01	1.679	6.218	4.081	7.639	20.913	6.455	.419
.500	5.07E-01	1.835	8.745	4.219	9.358	21.555	6.411	.419
.550	3.98E-01	2.005	12.622	4.372	11.815	22.349	6.363	.417
.600	3.05E-01	2.192	18.619	4.539	15.431	23.347	6.311	.414
.650	2.26E-01	2.395	29.250	4.722	20.960	24.627	6.256	.409
.700	1.62E-01	2.617	48.006	4.922	29.809	26.322	6.196	.402
.725	1.34E-01	2.737	63.141	5.029	36.263	27.393	6.164	.398
.750	1.09E-01	2.861	84.691	5.141	44.812	28.673	6.131	.393
.775	8.77E-02	2.992	117.078	5.257	56.619	30.230	6.098	.387
.800	6.88E-02	3.129	166.703	5.379	73.844	32.171	6.062	.382
.825	5.25E-02	3.272	246.240	5.506	99.816	34.657	6.026	.378
.850	3.88E-02	3.423	381.225	5.638	141.128	37.960	5.990	.374
.875	2.75E-02	3.580	629.422	5.776	211.778	42.572	5.946	.364
.900	1.85E-02	3.746	1142.686	5.921	345.744	49.488	5.842	.320

TABLE 36

FIVE SHOE TILTING PAD BEARING (L/D = 0.5, Offset = .500, m = 0.3, $\chi = 55^{o}$, LOAD ON PAD)
DIMENSIONLESS SYNCHRONOUS DYNAMIC DATA

ECC. (DIM)	SOMMERFELD (DIM)	$\bar{K}_{yy}$ (DIM)	$\bar{K}_{xx}$ (DIM)	$\bar{B}_{yy}$ (DIM)	$\bar{B}_{xx}$ (DIM)	$\bar{T}$ORQUE (DIM)	$\bar{Q}$ REQUIRED (DIM)	$\bar{Q}$ LOSS (DIM)
.050	6.65E+00	2.154	2.188	4.799	4.829	21.384	5.902	.682
.100	3.28E+00	2.198	2.343	4.839	4.964	21.460	5.900	.678
.150	2.13E+00	2.267	2.620	4.902	5.201	21.590	5.896	.672
.200	1.54E+00	2.361	3.049	4.987	5.559	21.776	5.892	.663
.250	1.10E+00	2.478	3.673	5.094	6.063	22.023	5.886	.653
.300	9.22E-01	2.617	4.561	5.221	6.754	22.338	5.878	.638
.350	7.32E-01	2.777	5.820	5.368	7.691	22.730	5.866	.616
.400	5.84E-01	2.960	7.616	5.536	8.960	23.213	5.850	.586
.450	4.64E-01	3.166	10.219	5.725	10.694	23.804	5.830	.547
.500	3.67E-01	3.395	14.081	5.935	13.100	24.531	5.805	.501
.550	2.85E-01	3.651	19.987	6.162	16.500	25.431	5.776	.461
.600	2.20E-01	3.952	29.415	6.408	21.455	26.561	5.742	.423
.650	1.65E-01	4.281	45.142	6.677	28.935	28.013	5.704	.409
.700	1.19E-01	4.640	73.194	6.968	40.703	29.940	5.662	.400
.725	9.95E-02	4.832	95.660	7.123	49.259	31.160	5.639	.395
.750	8.17E-02	5.032	127.712	7.285	60.810	32.620	5.615	.389
.775	6.59E-02	5.242	174.875	7.453	77.003	34.399	5.589	.385
.800	5.21E-02	5.462	246.471	7.629	100.302	36.615	5.563	.381
.825	4.01E-02	5.692	360.090	7.812	135.246	39.456	5.537	.377
.850	3.00E-02	5.933	551.435	8.002	190.557	43.232	5.507	.369
.875	2.16E-02	6.185	901.296	8.201	284.712	48.510	5.450	.346

TABLE 37

FIVE SHOE TILTING PAD BEARING (L/D = 0.50, Offset = .500, m = 0.5, $\chi = 55^{o}$, LOAD ON PAD)
DIMENSIONLESS SYNCHRONOUS DYNAMIC DATA

ECC. (DIM)	SOMMERFELD (DIM)	$\bar{K}_{yy}$ (DIM)	$\bar{K}_{xx}$ (DIM)	$\bar{B}_{yy}$ (DIM)	$\bar{B}_{xx}$ (DIM)	$\bar{T}$ORQUE (DIM)	$\bar{Q}$ REQUIRED (DIM)	$\bar{Q}$ LOSS (DIM)
.050	3.01E+00	9.339	9.445	11.464	11.532	29.629	4.388	.729
.100	1.48E+00	9.477	9.927	11.555	11.844	29.734	4.387	.728
.150	9.65E-01	9.696	10.786	11.701	12.391	29.912	4.386	.725
.200	7.00E-01	9.991	12.103	11.899	13.212	30.167	4.384	.721
.250	5.36E-01	10.357	14.005	12.145	14.365	30.506	4.380	.717
.300	4.22E-01	10.794	16.685	12.438	15.934	30.937	4.377	.711
.350	3.37E-01	11.299	20.440	12.777	18.043	31.475	4.372	.704
.400	2.71E-01	11.874	25.728	13.162	20.870	32.137	4.367	.695
.450	2.16E-01	12.521	33.287	13.594	24.686	32.948	4.361	.686
.500	1.74E-01	13.243	44.327	14.072	29.693	33.947	4.354	.675
.550	1.37E-01	14.043	60.938	14.599	37.122	35.185	4.345	.663
.600	1.07E-01	14.927	86.937	15.177	47.371	36.745	4.336	.648
.650	8.05E-02	15.900	129.522	15.807	62.830	38.758	4.325	.633
.700	5.68E-02	16.970	203.593	16.493	87.897	41.442	4.312	.617
.725	4.95E-02	17.543	261.356	16.859	106.406	43.147	4.305	.609
.750	4.11E-02	18.144	342.032	17.239	131.237	45.188	4.299	.601
.775	3.37E-02	18.774	458.117	17.636	165.458	47.677	4.291	.593
.800	2.71E-02	19.434	631.501	18.049	214.217	50.781	4.279	.580
.825	2.14E-02	20.125	903.139	18.479	286.662	54.766	4.246	.556

TABLE 38

DYNAMIC DATA OF FIXED PAD (L/D = 1.00, Offset = .500, χ = 55°, LOAD ON PAD CENTER)

SOMERFELD	$\bar{K}_{\eta\eta}$	$-\bar{K}_{\eta\xi}$	$-\bar{K}_{\xi\eta}$	$\bar{K}_{\xi\xi}$	$\bar{B}_{\eta\eta}$	$\bar{B}_{\eta\xi}$	$\bar{B}_{\xi\eta}$	$\bar{B}_{\xi\xi}$
30.0000	.627178E-02	-.163553E-01	.891270	.916136E-01	.329598E-01	-.627525E-02	-.627550E-02	1.78288
10.0000	.196436E-01	-.179165E-01	1.01405	.286771	.377458E-01	-.197357E-01	-.197363E-01	2.03217
5.00000	.427805E-01	-.209992E-01	1.30608	.623742	.492866E-01	-.433501E-01	-.433517E-01	2.62684
3.80000	.593161E-01	-.234150E-01	1.52797	.864226	.581762E-01	-.604604E-01	-.604627E-01	3.08116
3.00000	.790900E-01	-.256332E-01	1.78170	1.15142	.684684E-01	-.810991E-01	-.811022E-01	3.60196
2.50000	.991340E-01	-.275439E-01	2.03071	1.44224	.786849E-01	-.102199	-.102203	4.11467
2.00000	.131344	-.299677E-01	2.41475	1.90904	.946464E-01	-.136421	-.136427	4.90806
1.50000	.189741	-.330496E-01	3.07356	2.75406	.122544	-.199305	-.199312	6.27615
1.00000	.321932	-.355992E-01	4.44499	4.66257	.182398	-.344714	-.344727	9.14670
.700000	.516238	-.329824E-01	6.28671	7.46070	.265896	-.564252	-.564273	13.0405
.550000	.712585	-.257254E-01	8.02349	10.2825	.347360	-.791515	-.791544	16.7450
.400000	1.09408	-.367948E-02	11.1844	15.7545	.501300	-1.24531	-1.24536	23.5527
.350000	1.31071	.119771E-01	12.8943	18.8573	.587241	-1.50900	-1.50906	27.2650
.280000	1.77453	.504200E-01	16.4154	25.4937	.769376	-2.08598	-2.08607	34.9656
.200000	2.80791	.150517	23.8141	40.2596	1.17157	-3.42184	-3.42198	51.3492
.150000	4.16357	.296000	32.9677	59.6165	1.69976	-5.25966	-5.25987	71.9230
.900000E-01	8.40259	.761926	59.6792	120.220	3.39216	-11.4801	-11.4805	133.365
.600000E-01	14.6447	1.37853	96.9466	210.689	6.01576	-21.5993	-21.6532	221.586
.280000E-01	38.1375	5.93232	244.272	623.757	16.0841	-63.2342	-68.1006	584.581

TABLE 39

STATIC DATA OF FIXED PAD (L/D = 1.0, Offset = .500, $\chi = 55^{o}$, LOAD ON PAD CENTER)

	ECC. (DIM)	ATTITUDE (DEG)	H PIVOT (DIM)	SOMMERFELD (DIM)	$\overline{\text{TORQUE}}$ (DIM)	$\overline{\text{Q}}$IN (DIM)	$\overline{\text{Q}}$AXIAL (DIM)
1	.04	79.15	.993	3.00E+01	3.037	1.565	.010
2	.11	62.37	.948	1.00E+01	3.176	1.503	.026
3	.20	49.12	.866	5.00E+00	3.469	1.383	.040
4	.25	43.90	.819	3.80E+00	3.665	1.311	.045
5	.29	40.16	.775	3.00E+00	3.867	1.244	.048
6	.33	37.57	.739	2.50E+00	4.049	1.190	.050
7	.37	34.74	.694	2.00E+00	4.304	1.120	.052
8	.43	31.56	.635	1.50E+00	4.687	1.030	.054
9	.50	27.66	.555	1.00E+00	5.343	.904	.054
10	.57	25.21	.486	7.00E-01	6.049	.798	.053
11	.61	23.67	.445	5.50E-01	6.604	.730	.051
12	.66	21.91	.392	4.00E-01	7.449	.646	.049
13	.67	21.25	.371	3.50E-01	7.846	.612	.047
14	.70	20.23	.339	2.80E-01	8.572	.559	.045
15	.75	18.69	.293	2.00E-01	9.835	.484	.041
16	.78	17.90	.258	1.50E-01	11.106	.425	.036
17	.83	16.45	.203	9.00E-02	13.906	.332	.028
18	.86	15.55	.167	6.00E-02	16.775	.267	.021
19	.92	14.27	.113	2.80E-02	24.561	.164	.014

TABLE 40

FIVE SHOE TILTING PAD BEARING (L/D = 1.0, Offset = .500, m = 0.0, $\chi = 55^{\circ}$, LOAD ON PAD)
DIMENSIONLESS SYNCHRONOUS DYNAMIC DATA

ECC. (DIM)	SOMMERFELD (DIM)	$\bar{K}_{yy}$ (DIM)	$\bar{K}_{xx}$ (DIM)	$\bar{B}_{yy}$ (DIM)	$\bar{B}_{xx}$ (DIM)	$\bar{T}$ TORQUE (DIM)	$\bar{Q}$ REQUIRED (DIM)	$\bar{Q}$ LOSS (DIM)
.050	7.91E+00	.041	.079	3.270	3.280	15.097	7.862	.053
.100	4.90E+00	.080	.189	3.278	3.342	15.153	7.840	.075
.150	3.60E+00	.125	.337	3.297	3.464	15.246	7.808	.091
.200	2.77E+00	.175	.534	3.328	3.655	15.379	7.769	.104
.250	2.17E+00	.232	.801	3.370	3.930	15.556	7.723	.115
.300	1.73E+00	.295	1.168	3.424	4.313	15.781	7.671	.123
.350	1.36E+00	.364	1.678	3.489	4.841	16.062	7.613	.129
.400	1.10E+00	.441	2.403	3.566	5.565	16.406	7.551	.133
.450	8.68E-01	.524	3.459	3.654	6.568	16.827	7.484	.136
.500	6.76E-01	.613	5.039	3.754	7.978	17.345	7.413	.138
.550	5.21E-01	.711	7.482	3.866	10.006	17.984	7.339	.139
.600	3.93E-01	.820	11.416	3.992	13.009	18.786	7.261	.139
.650	2.87E-01	.939	18.071	4.131	17.630	19.813	7.179	.139
.700	2.03E-01	1.071	30.073	4.286	25.101	21.169	7.094	.136
.725	1.67E-01	1.141	39.753	4.369	30.613	22.024	7.049	.135
.750	1.36E-01	1.215	53.635	4.456	37.969	23.042	7.004	.133
.775	1.09E-01	1.293	74.185	4.547	48.003	24.276	6.958	.130
.800	8.51E-02	1.375	105.804	4.643	62.013	25.806	6.911	.127
.825	6.49E-02	1.460	156.927	4.743	82.168	27.761	6.862	.123
.850	4.78E-02	1.550	244.272	4.848	113.269	30.354	6.813	.118
.875	3.37E-02	1.645	406.093	4.958	165.614	33.984	6.763	.115
.900	2.24E-02	1.745	743.787	5.073	265.544	39.497	6.681	.123
.925	1.38E-02	1.849	1594.983	5.194	498.140	49.142	6.345	.186

TABLE 41

FIVE SHOE TILTING PAD BEARING (L/D = 1.0, Offset = .500, m = 0.2, $\chi = 55^{o}$, LOAD ON PAD)
DIMENSIONLESS SYNCHRONOUS DYNAMIC DATA

ECC. (DIM)	SOMMERFELD (DIM)	$\bar{K}_{yy}$ (DIM)	$\bar{K}_{xx}$ (DIM)	$\bar{B}_{yy}$ (DIM)	$\bar{B}_{xx}$ (DIM)	$\bar{T}$ORQUE (DIM)	$\bar{Q}$ REQUIRED (DIM)	$\bar{Q}$ LOSS (DIM)
.050	6.38E+00	1.302	1.331	5.210	5.242	18.763	6.414	.231
.100	3.15E+00	1.340	1.463	5.253	5.387	18.830	6.413	.228
.150	2.05E+00	1.398	1.697	5.322	5.642	18.944	6.411	.224
.200	1.46E+00	1.478	2.060	5.416	6.026	19.106	6.406	.215
.250	1.10E+00	1.578	2.592	5.535	6.568	19.323	6.397	.199
.300	8.43E-01	1.700	3.353	5.679	7.310	19.598	6.385	.175
.350	6.76E-01	1.859	4.462	5.837	8.292	19.941	6.366	.157
.400	5.60E-01	2.039	6.033	6.013	9.609	20.364	6.341	.157
.450	4.57E-01	2.234	8.281	6.206	11.399	20.882	6.312	.156
.500	3.68E-01	2.447	11.568	6.417	13.874	21.517	6.278	.155
.550	2.91E-01	2.678	16.613	6.649	17.378	22.303	6.239	.153
.600	2.24E-01	2.930	24.560	6.901	22.486	23.289	6.196	.150
.650	1.68E-01	3.205	37.757	7.177	30.208	24.553	6.149	.147
.700	1.21E-01	3.505	61.106	7.476	42.419	26.223	6.098	.142
.725	1.01E-01	3.666	79.678	7.636	51.250	27.278	6.071	.139
.750	8.35E-02	3.834	106.064	7.802	62.826	28.537	6.042	.136
.775	6.76E-02	4.010	144.801	7.976	78.274	30.067	6.012	.132
.800	5.35E-02	4.195	203.562	8.157	99.860	31.971	5.982	.128
.825	4.14E-02	4.388	296.892	8.345	131.554	34.411	5.952	.124
.850	3.10E-02	4.590	454.496	8.542	181.230	37.671	5.918	.122
.875	2.23E-02	4.802	744.110	8.747	266.362	42.289	5.857	.129
.900	1.52E-02	5.025	1345.949	8.960	432.365	49.465	5.651	.169

TABLE 42

FIVE SHOE TILTING PAD BEARING (L/D = 1.0, Offset = .500, m = 0.3, $\chi = 55^{o}$, LOAD ON PAD)
DIMENSIONLESS SYNCHRONOUS DYNAMIC DATA

ECC. (DIM)	SOMMERFELD (DIM)	$\bar{K}_{yy}$ (DIM)	$\bar{K}_{xx}$ (DIM)	$\bar{B}_{yy}$ (DIM)	$\bar{B}_{xx}$ (DIM)	$\bar{T}$ORQUE (DIM)	$\bar{Q}$ REQUIRED (DIM)	$\bar{Q}$ LOSS (DIM)
.050	4.76E+00	2.662	2.907	7.230	7.273	21.358	5.650	.260
.100	2.35E+00	2.921	3.115	7.288	7.471	21.434	5.649	.258
.150	1.53E+00	3.015	3.486	7.381	7.618	21.563	5.647	.255
.200	1.11E+00	3.141	4.058	7.506	8.339	21.748	5.645	.251
.250	8.45E-01	3.298	4.891	7.663	9.074	21.993	5.642	.247
.300	6.64E-01	3.485	6.070	7.850	10.076	22.305	5.638	.240
.350	5.30E-01	3.701	7.730	8.067	11.428	22.693	5.633	.233
.400	4.24E-01	3.948	10.088	8.315	13.251	23.171	5.627	.222
.450	3.38E-01	4.228	13.484	8.595	15.731	23.756	5.618	.205
.500	2.68E-01	4.541	18.482	8.906	19.148	24.474	5.605	.182
.550	2.10E-01	4.897	26.060	9.247	23.946	25.363	5.588	.159
.600	1.64E-01	5.302	37.979	9.614	30.866	26.479	5.565	.148
.650	1.24E-01	5.743	57.584	10.013	41.200	27.910	5.538	.143
.700	9.07E-02	6.223	91.924	10.445	57.293	29.806	5.507	.138
.725	7.62E-02	6.479	119.104	10.674	68.715	31.005	5.489	.134
.750	6.31E-02	6.748	157.485	10.912	83.632	32.438	5.470	.131
.775	5.14E-02	7.028	213.222	11.160	103.810	34.184	5.451	.127
.800	4.10E-02	7.321	297.202	11.419	132.209	36.360	5.432	.123
.825	3.19E-02	7.627	429.886	11.687	174.248	39.161	5.409	.121
.850	2.41E-02	7.948	653.090	11.967	240.743	42.926	5.371	.124
.875	1.76E-02	8.284	1062.366	12.258	355.900	48.319	5.262	.145

TABLE 43

FIVE SHOE TILTING PAD BEARING (L/D = 1.0, Offset = .500, m = 0.5, $\chi = 55^{o}$, LOAD ON PAD)
DIMENSIONLESS SYNCHRONOUS DYNAMIC DATA

ECC. (DIM)	SOMMERFELD (DIM)	$\bar{K}_{yy}$ (DIM)	$\bar{K}_{xx}$ (DIM)	$\bar{B}_{yy}$ (DIM)	$\bar{B}_{xx}$ (DIM)	$\bar{T}$ORQUE (DIM)	$\bar{Q}$ REQUIRED (DIM)	$\bar{Q}$ LOSS (DIM)
.050	2.20E+00	12.499	12.637	16.981	17.079	29.551	4.089	.266
.100	1.09E+00	12.679	13.264	17.112	17.523	29.655	4.088	.265
.150	7.08E-01	12.965	14.381	17.321	18.300	29.831	4.087	.264
.200	5.14E-01	13.351	16.088	17.602	19.463	30.083	4.086	.262
.250	3.94E-01	13.830	18.543	17.954	21.092	30.417	4.084	.260
.300	3.11E-01	14.400	21.987	18.372	23.301	30.843	4.082	.257
.350	2.50E-01	15.061	26.782	18.857	26.257	31.374	4.079	.254
.400	2.02E-01	15.813	33.489	19.406	30.201	32.027	4.076	.250
.450	1.63E-01	16.658	42.995	20.022	35.492	32.827	4.072	.245
.500	1.31E-01	17.600	56.746	20.704	42.665	33.810	4.068	.240
.550	1.04E-01	18.642	77.203	21.455	52.548	35.028	4.063	.234
.600	8.14E-02	19.792	108.765	22.278	66.438	36.562	4.057	.227
.650	6.22E-02	21.058	159.863	23.175	86.502	38.538	4.049	.219
.700	4.61E-02	22.446	247.213	24.151	117.538	41.170	4.042	.210
.725	3.90E-02	23.190	314.859	24.670	139.983	42.845	4.039	.206
.750	3.27E-02	23.969	409.068	25.211	169.842	44.857	4.034	.202
.775	2.70E-02	24.785	544.463	25.773	210.907	47.328	4.023	.201
.800	2.19E-02	25.638	746.825	26.359	269.756	50.446	3.995	.205
.825	1.74E-02	26.532	1064.762	26.969	358.627	54.533	3.918	.220

SECTION V

BOUNDARY CONDITIONS

This section discusses the effects of the cavitation condition on bearing static and dynamic properties. An important point concerns the location of the boundary conditions during the calculation of dynamic bearing properties. Specifically -- are they fixed at the same position obtained in steady state operation or are the positions recalculated for each new coefficient. The plain journal bearing is used as an illustration of the various results. It will be seen from the results that half Sommerfeld conditions with recalculated (floating) boundary locations during dynamic analysis gives good agreement with the Reynolds condition using fixed boundary locations in dynamic analysis.

5.1 Types of Conditions

A number of different boundary or cavitation conditions are currently used in bearing analysis. These may be generally grouped under the following headings:

Full Sommerfeld Half Sommerfeld Reynolds	Boundary or Cavitation Conditions

The full Sommerfeld condition involves neglecting the effects of cavitation within the bearing. The half Sommerfeld condition consists of solving Reynolds equation (described in Section 2) and then setting the resulting negative pressures to ambient (zero) pressure. Finally Reynolds condition requires that both the pressure and the slope of the pressure normal to the boundary is zero at the trailing edge boundary.

The effects of cavitation are very important in bearings so that full Sommerfeld condition is not considered in this report. Only under very high ambient pressure such as in a nuclear water pump does this condition

apply. In a plain journal bearing the full Sommerfeld condition gives an unstable bearing.

In evaluating the half Sommerfeld condition, the steady state running conditions are determined by assuming a vertically downward load and then iterating until the equilibrium angle is obtained. The location of the leading edge boundary is at the maximum film thickness in a plain journal bearing or diverging-converging pad while it is at the leading edge of a converging-diverging pad. The trailing edge boundary is at the minimum film thicness in a plain journal bearing or converging-diverging pad but at the trailing edge of a diverging-converging pad. During the dynamic analysis, the diaplacement and velocity perturbations to determine the dynamic coefficients produce small changes in film thickness. The following analysis of a plain journal bearing shows that these small changes in film thickness do not produce small (neglectable) effects in the half Sommerfeld condition dynamic bearing coefficients. If the conditions are kept at the steady state position — both leading and trailing edges — the conditions are called fixed-fixed in this report. If they are recalculated for each dynamic coefficient — both leading and trailing edges — the conditions are called floating-floating in this report.

Reynolds condition is used to obtain the equilibrium position in a manner similar to that in the half Sommerfeld condition except that the trailing edge location is iterated over the pad surface until both the pressure and its derivative are zero. In the case of a purely converging pad, this procedure is ignored. Usually the effect of the boundary curvature is small so the angle at which Reynolds condition is applied may be considered constant. The boundary conditions may be either considered as fixed-fixed during dynamic calculations or as floating-floating.

At the leading edge θ_ℓ and the trailing edge θ_t of the positive pressure region, the boundary conditions for the half Sommerfeld condition are

$$P = 0 \quad , \quad \theta = \theta_{\ell s}$$
$$P = 0 \quad , \quad \theta = \theta_{ts}$$

while for the Reynolds condition

$$P = 0 \quad , \quad \theta = \theta_{\ell r}$$
$$P = 0 \quad , \quad \theta = \theta_{tr}$$
$$\frac{\partial P}{\partial n} = 0 \quad , \quad \theta = \theta_{tr}$$

These conditions refer to plain journal bearings but similar results can be applied to other bearings. The last equation indicates that the derivative of P normal to the trailing edge curve is zero. It may also be written as

$$\frac{\partial P}{\partial \theta} n_\theta + \frac{\partial P}{\partial z} n_z = 0$$

where n_θ and n_z are the direction cosines of the normal trailing edge curve. This is zero only if

$$\frac{\partial P}{\partial \theta} = 0 \quad , \quad \theta = \theta_{tr}$$

$$\frac{\partial P}{\partial z} = 0 \quad , \quad \theta = \theta_{tr}$$

An additional subscript has been added to the leading and trailing edge angles to denote half Sommerfeld (s) and Reynolds (r) conditions. The half Sommerfeld condition always leads to a positive pressure region of π radians and a negative pressure region of π radians so that θ_{ts} may be taken either as

$$\theta_{ts} = \theta_{\ell s} + 2\pi, \text{ and } P \geq 0$$

or

$$\theta_{ts} = \theta_{\ell s} + \pi$$

The Reynolds boundary condition calculates a value for θ_{tr} such that $\pi < \theta_{tr} - \theta_{\ell r} < 2\pi$ and neglects the pressure in the remainder of the bearing.

An alternative method of calculating the dynamic coefficients to the numerical perturbations employed in this report is the direct perturbation of the differential equation [Lund, 1966]. The film thickness is analytically perturbed and a separate differential equation is solved (numerically) for the dynamic coefficients. In applying the Reynolds condition, it can be shown that the derivative of the perturbed pressure is zero at the same location as the steady state pressure (to first order). Thus the fixed-fixed conditions are normally used with Reynolds condition.

The direct perturbation method assumes that the amplitudes of the first order perturbation pressures can be written as

$$P = P_0 + P_x \Delta x + P_y \Delta y + P_{\dot{x}} \Delta \dot{x} + P_{\dot{y}} \Delta \dot{y} \tag{17}$$

where

P_0 = Pressure Under Static Equilibrium Conditions

P_x = Pressure Perturbation Due to Δx Displacement

P_y = Pressure Perturbation Due to Δy Displacement

$P_{\dot{x}}$ = Pressure Perturbation Due to $\Delta \dot{x}$ Velocity

$P_{\dot{y}}$ = Pressure Perturbation Due to $\Delta \dot{y}$ Velocity

Applying the perturbation technique to Reynolds equation yields five equations which must each be solved for the pressure [Lund, 1966], [Lund, 1978]. The boundary conditions at the trailing edge (the other boundaries are discussed in the references and are the same for half Sommerfeld and Reynolds conditions) are subject to a first order expansion also

$$P(\theta,z) = P(\theta_0,z_0) + \left(\frac{\partial P}{\partial \theta}\right)_0 \Delta\theta + \left(\frac{\partial P}{\partial z}\right)_0 \Delta z = 0 \tag{18}$$

Rewriting Eq. (17) as

$$P = P_0 + \Delta P$$

Eq. (18)

$$P(\theta,z) = P_0(\theta_0, z_0) + \Delta P(\theta_0, z_0)$$
$$+ \left(\frac{\partial P_0}{\partial \theta}\right)_0 \Delta\theta + \left(\frac{\partial P_0}{\partial z}\right)_0 \Delta z = 0 \tag{19}$$

It is apparent from this equation that for Reynolds condition the pressure gradients vanish

$$\left(\frac{\partial P_0}{\partial \theta}\right)_0 = \left(\frac{\partial P_0}{\partial z}\right)_0 = 0$$

and the perturbation pressure must vanish at the same trailing edge as used in the static equilibrium state. However, for the half Sommerfeld condition, the derivative of P with respect to θ is always large even if $\partial P_0/\partial z$ is small so Eq. (19) becomes

$$\Delta P(\theta_0, z_0) + \left(\frac{\partial P_0}{\partial \theta}\right)_0 \Delta\theta + \left(\frac{\partial P_0}{\partial z}\right) \Delta z = 0 \tag{20}$$

(since $P_0 = 0$). The three terms of Eq. (20) are first order effects of the perturbation and therefore must all be retained. Therefore, for the half Sommerfeld solution, the boundary conditions for the perturbed pressure may not be zero at the trailing edge. An equivalent numerical result is achieved if the trailing edge boundary be allowed to float during calculation of the dynamic coefficients.

5.2 Half Sommerfeld Condition

The half Sommerfeld condition was used to determine stiffness and damping coefficients for a plain journal bearing. Both fixed-fixed and floating-floating conditions were evaluated and compared to Reynolds fixed-fixed condition [Lund, 1966] . All of the stiffness and damping coefficients in this section were calculated using a series solution to Reynolds equation [Li, Allaire, Barrett, 1977] with a large number of series terms included so that no numerical errors are involved there. The effect of numerical displacement and velocity perturbations was eliminated by varying the perturbation size until no changes in the coefficients occur for large changes in perturbation size. Thus the half Sommerfeld condition, with both bloating-floating and fixed-fixed cases, can be examined. Principal stiffnesses are plotted vs. Sommerfeld number in Fig. 8 and cross-coupled stiffnesses in Fig. 9 where eccentricities are indicated at the top of the graph. The half Sommerfeld floating-floating results agree well with the Reynolds fixed-fixed case. Figs. 10 and 11 give the damping coefficients. The principal damping coefficients half Sommerfeld floating-floating curves again are very close to the Lund data points. For the cross-coupled damping, the Reynolds condition yields equal values of $\bar{B}_{xy}$ and $\bar{B}_{yx}$ while the half Sommerfeld floating-floating curves are slightly above and below. Fig. 12 shows the stability threshold for the plain journal bearing.

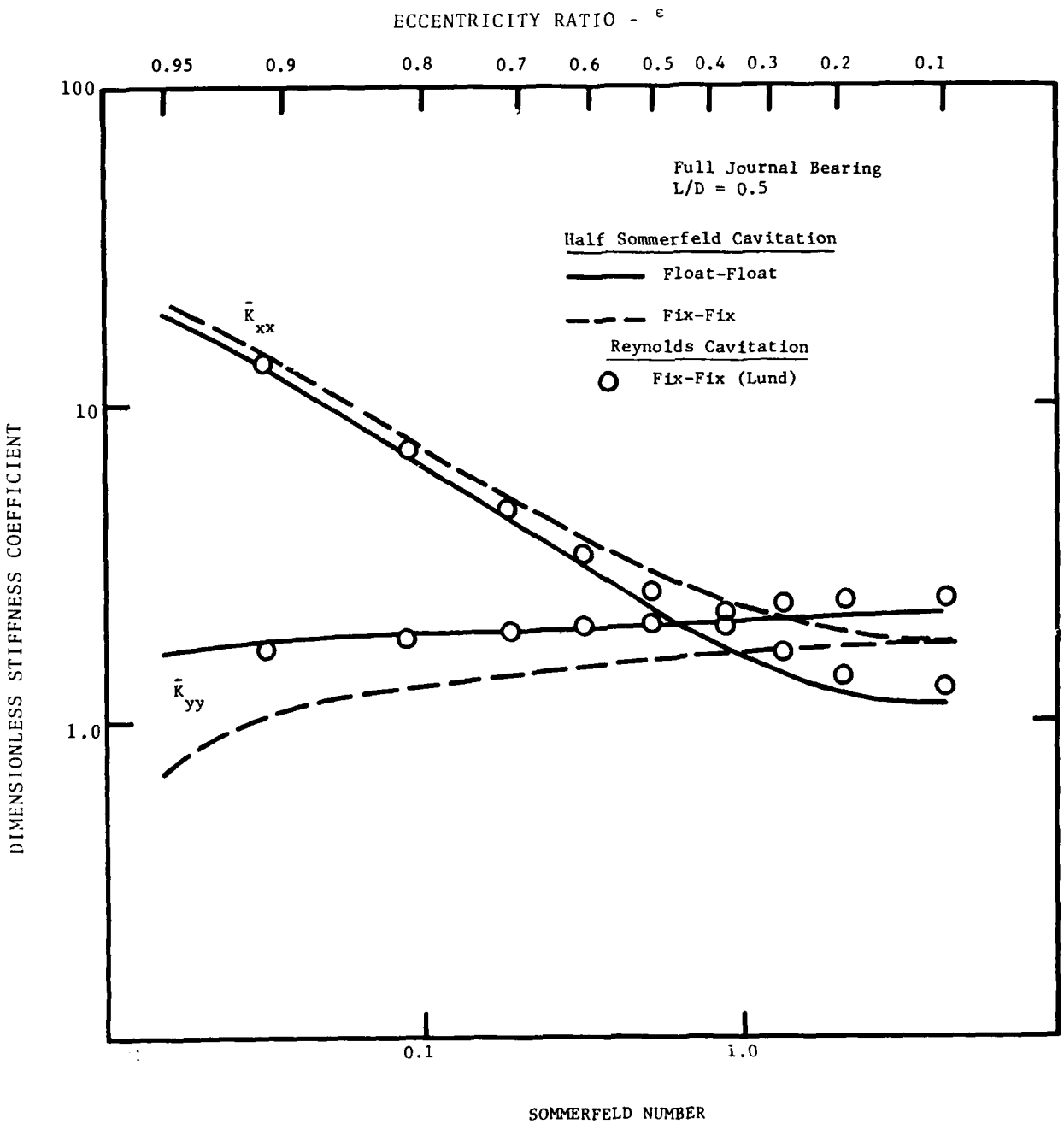

Principal Stiffnesses vs. Sommerfeld Number for Plain Journal Bearing

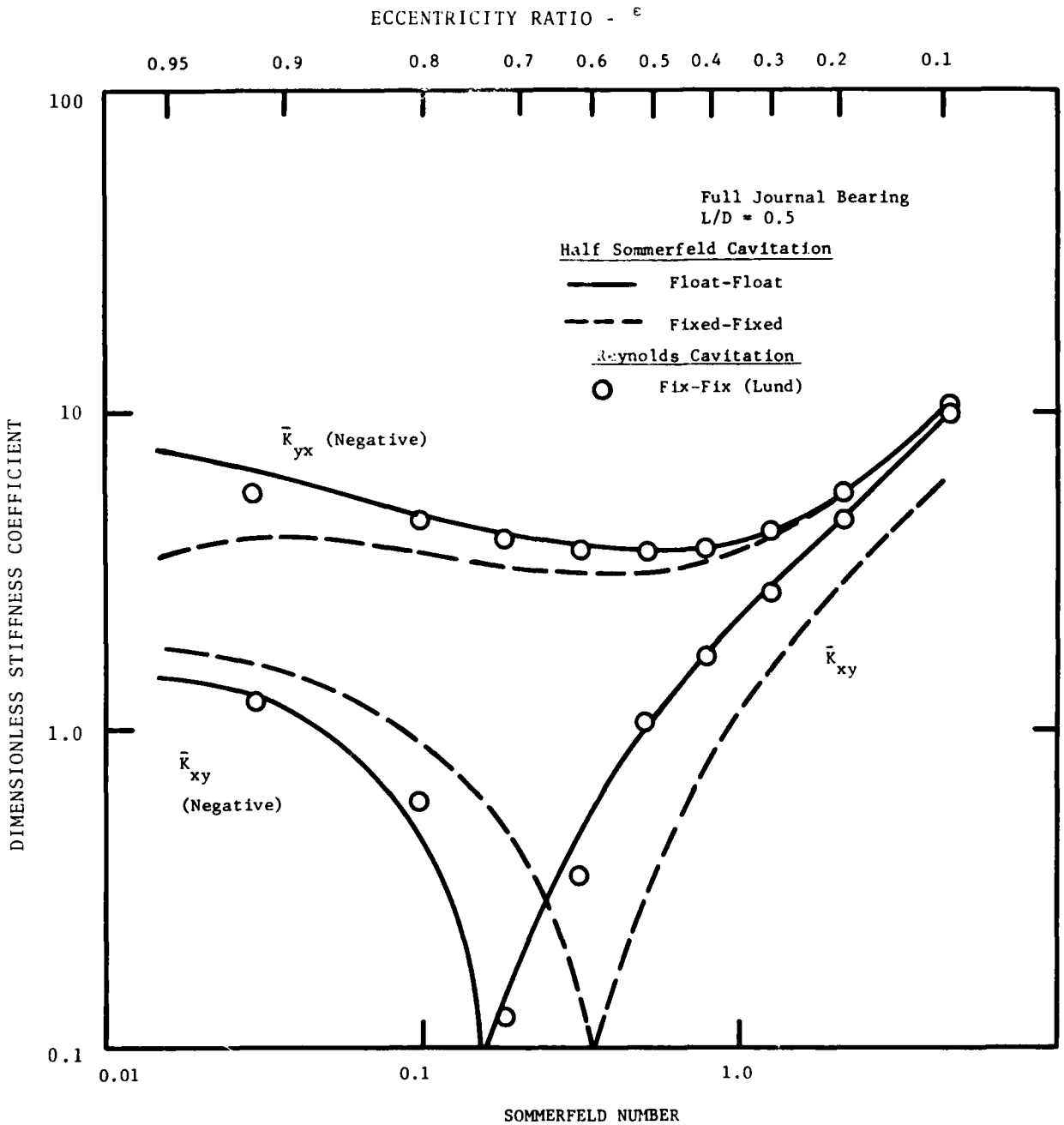

Figure 9 Cross-Coupled Stiffnesses vs. Sommerfeld Number for Plain Journal Bearing

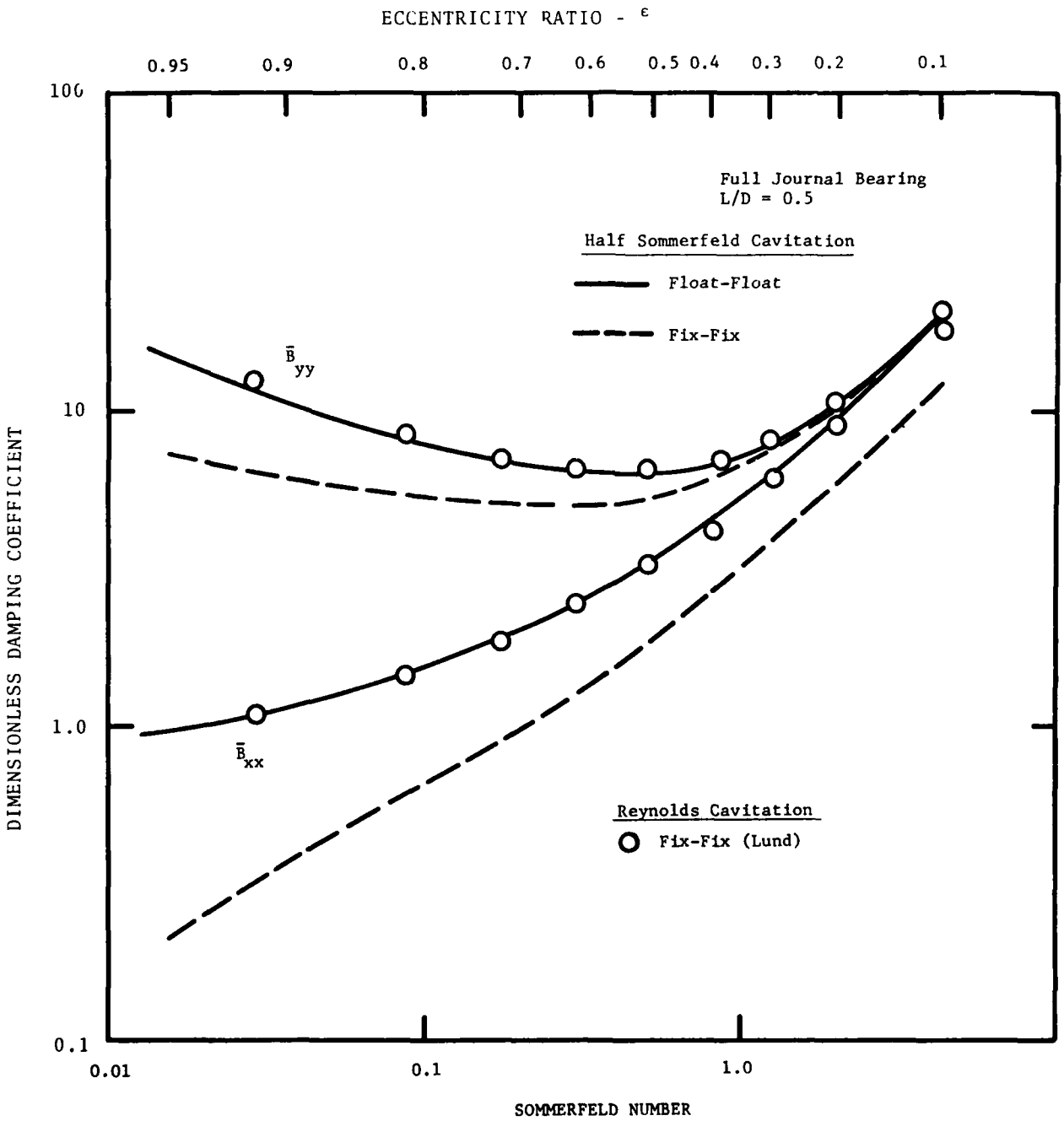

Figure 10 Principal Damping vs. Sommerfeld Number for Plain Journal Bearing

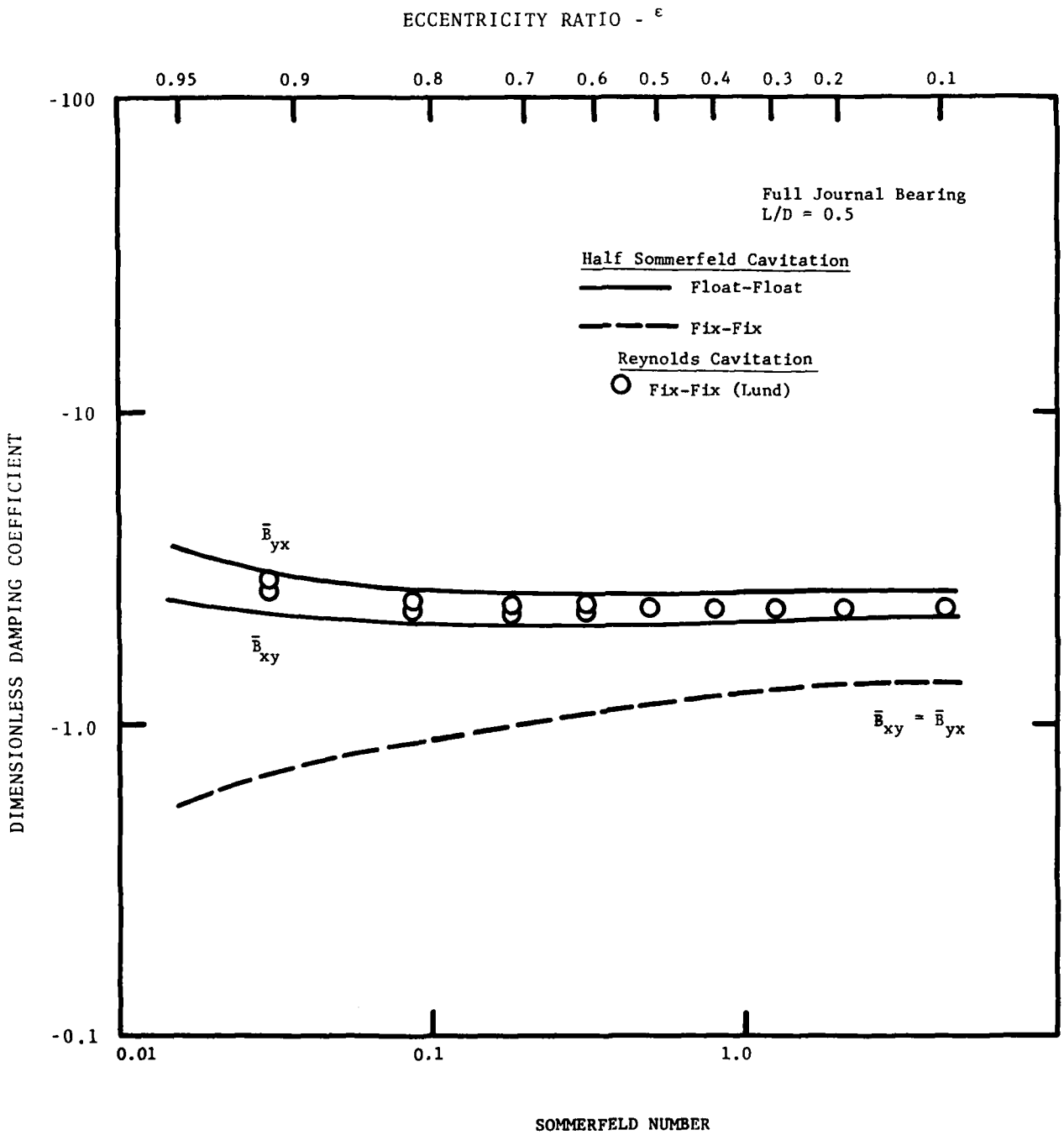

Figure 11 Cross-Coupled Damping vs. Sommerfeld Number for Plain Journal Bearing

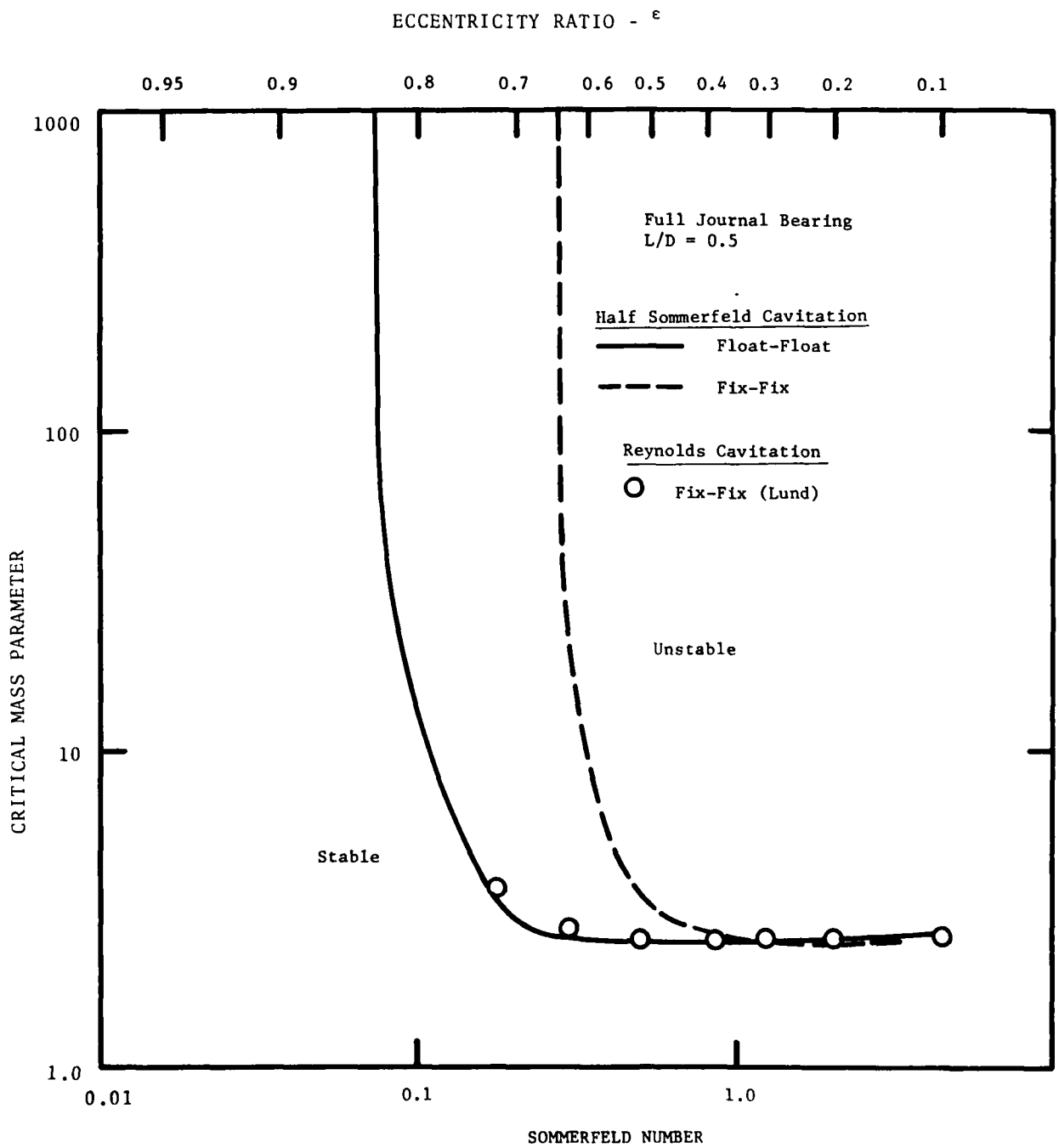

Figure 12 Stability Threshold vs. Sommerfeld Number for Plain Journal Bearing

In each case the half Sommerfeld floating-floating curves are very good agreement with the Reynolds fixed-fixed results. Only the cross-coupled damping coefficients are somewhat different but generally by less than 10%. These damping coefficients are of minimal importance in unbalance response of rotor-bearing systems and the effect on bearing stability, shown in Fig. 12, is also very small. The half Sommerfeld fixed-fixed values are not in good agreement with Lund's results. Thus, the half Sommerfeld floating-floating condition is used to obtain the dynamic coefficients in this report. The half Sommerfeld condition avoids the iteration on the boundary location and saves a great deal of computer time.

5.3 Reynolds Condition

Reynolds condition with both fixed-fixed and floating-floating boundary locations were calculated with the series solution [Li, Allaire, Barrett, 1977]. The only difference was the Reynolds boundary condition. Figs. 13 through 17 gives the results for stiffnesses, damping, and stability. For comparison, the Lund perturbation results [Lund, 1969] are given as well.

It is seen from the curves that the difference between fixed-fixed and floating-floating boundary locations is not nearly as large for Reynolds condition as it is for the half Sommerfeld condition. Some large differences occur in $\bar{K}_{yy}$ at high Sommerfeld number where the value actually becomes negative for the floating-floating case. The cross-coupled damping $\bar{B}_{yx}$ is also somewhat different at large S. The stability threshold actually has the largest difference.

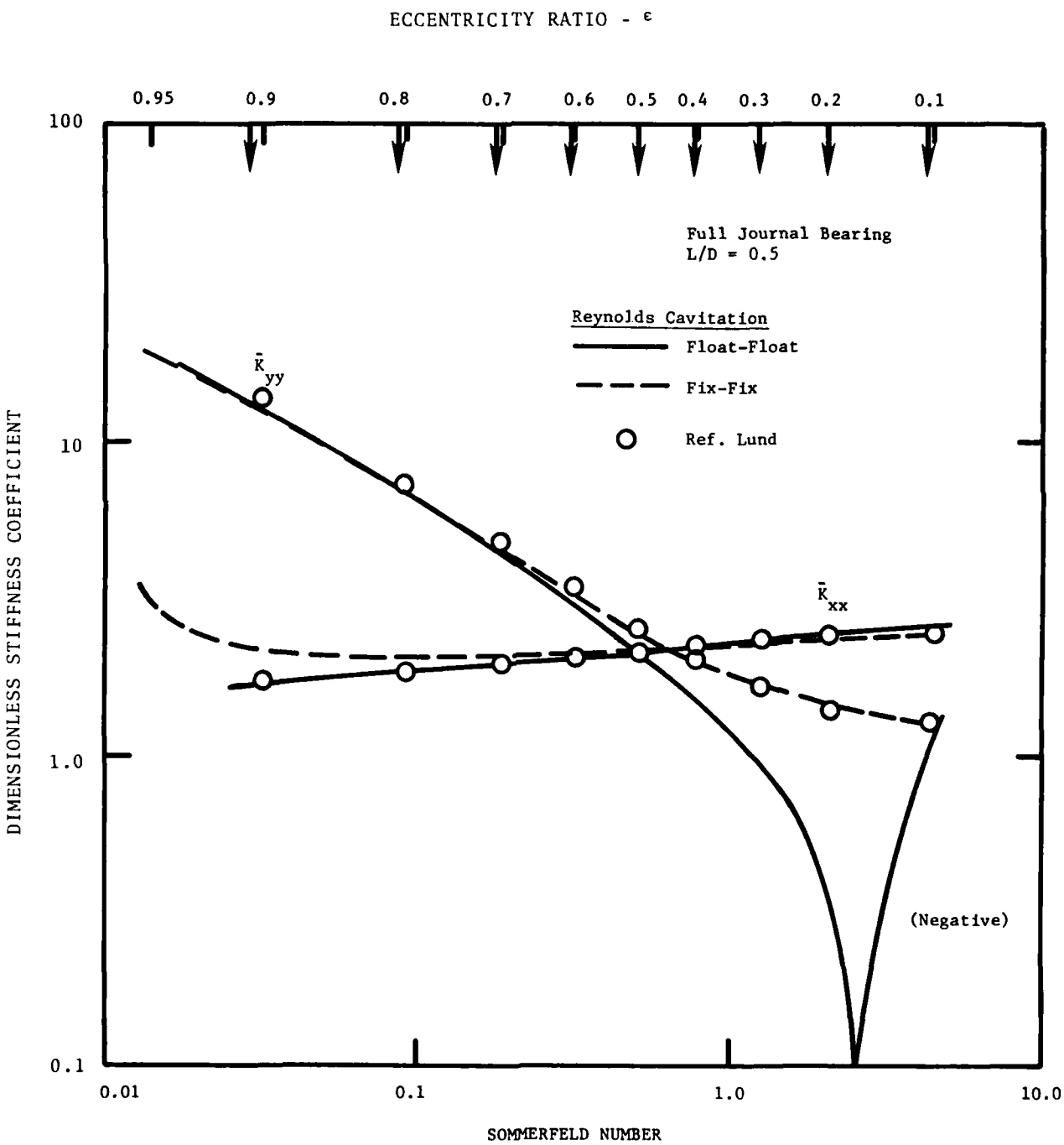

Figure 13 Principal Stiffnesses vs. Sommerfeld Number for Plain Journal Bearing

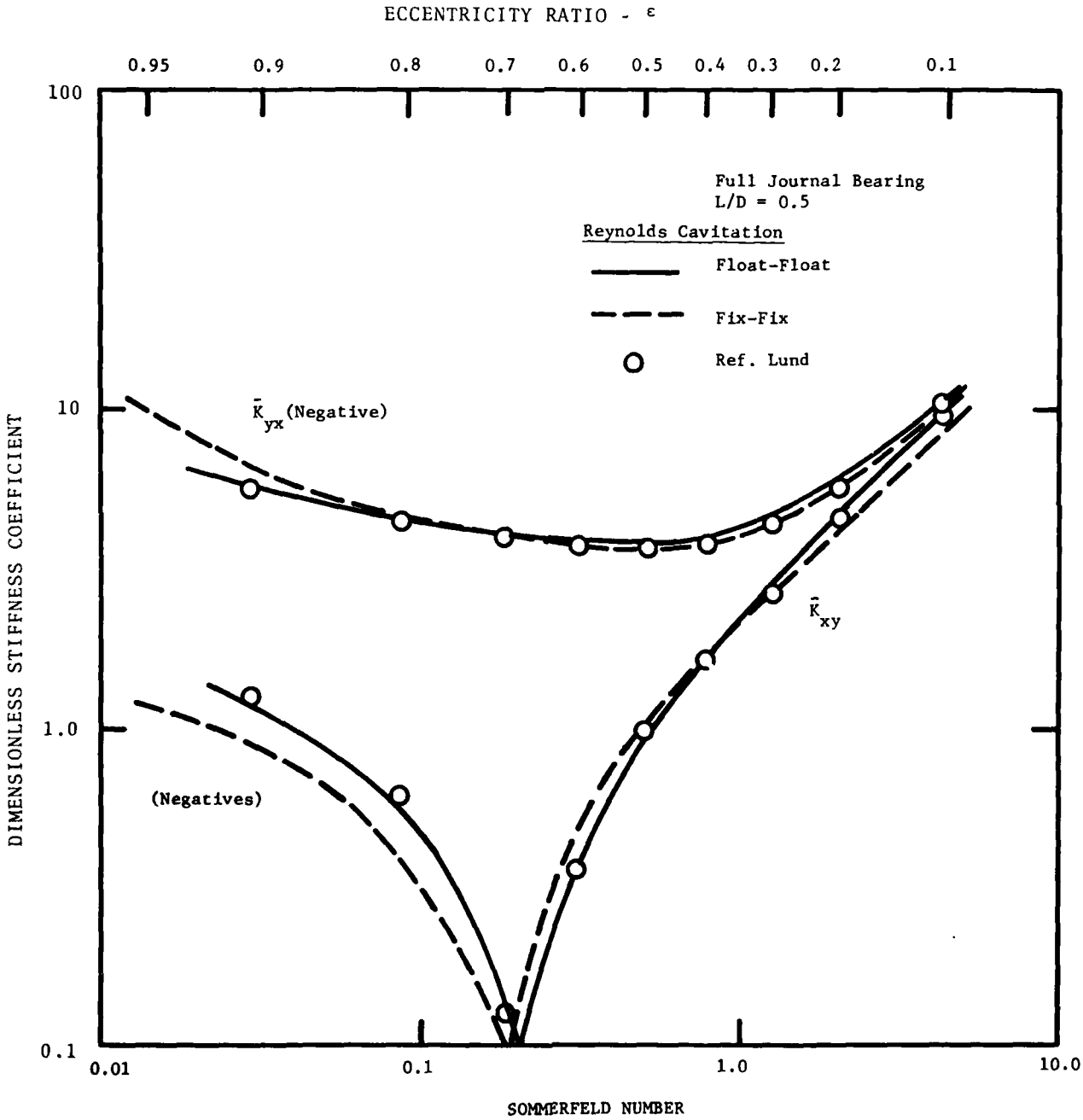

Figure 14 Cross-Coupled Stiffnesses vs. Sommerfeld Number for Plain Journal Bearing

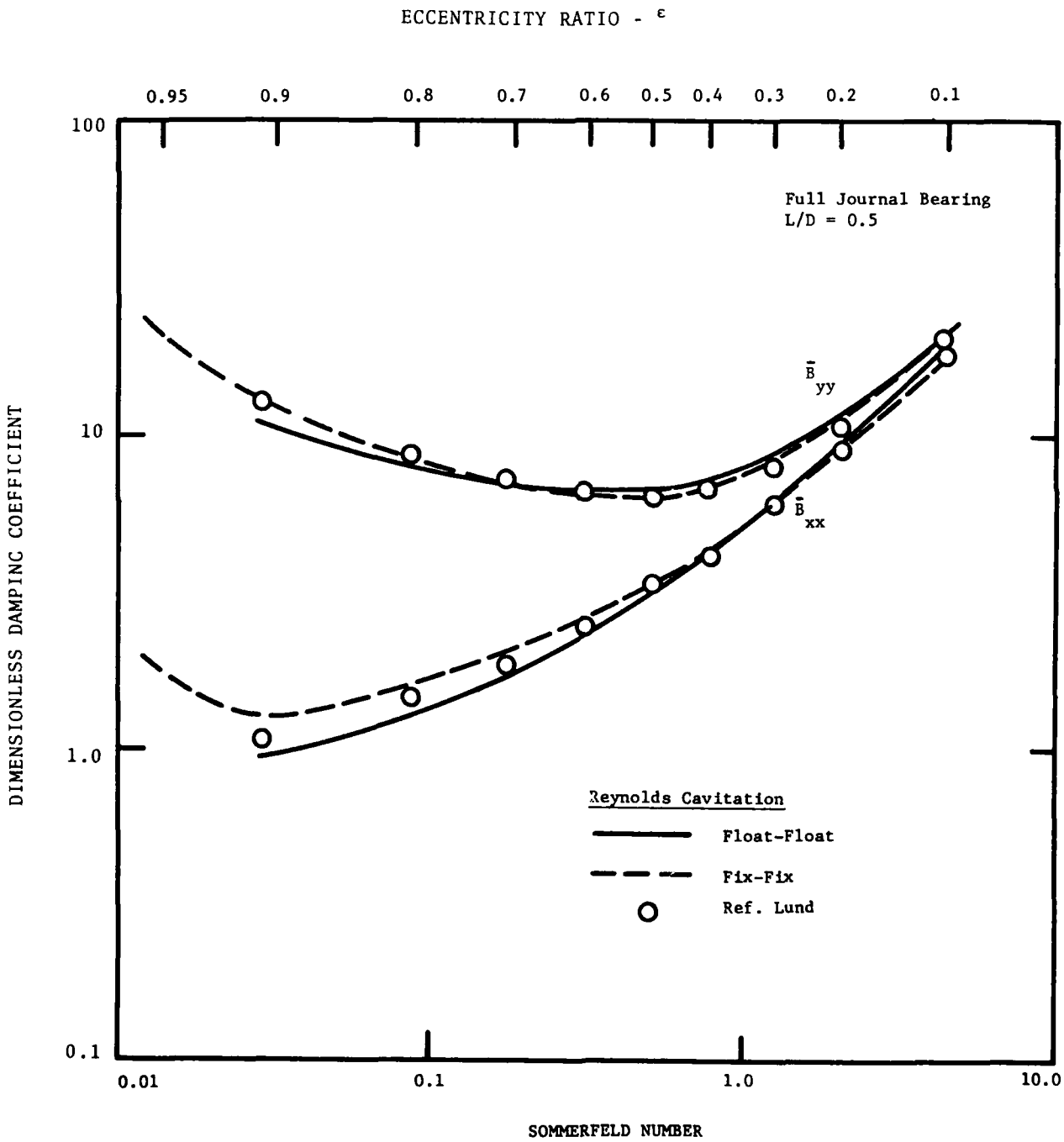

Figure 15 Principal Damping vs. Sommerfeld Number for Plain Journal Bearing

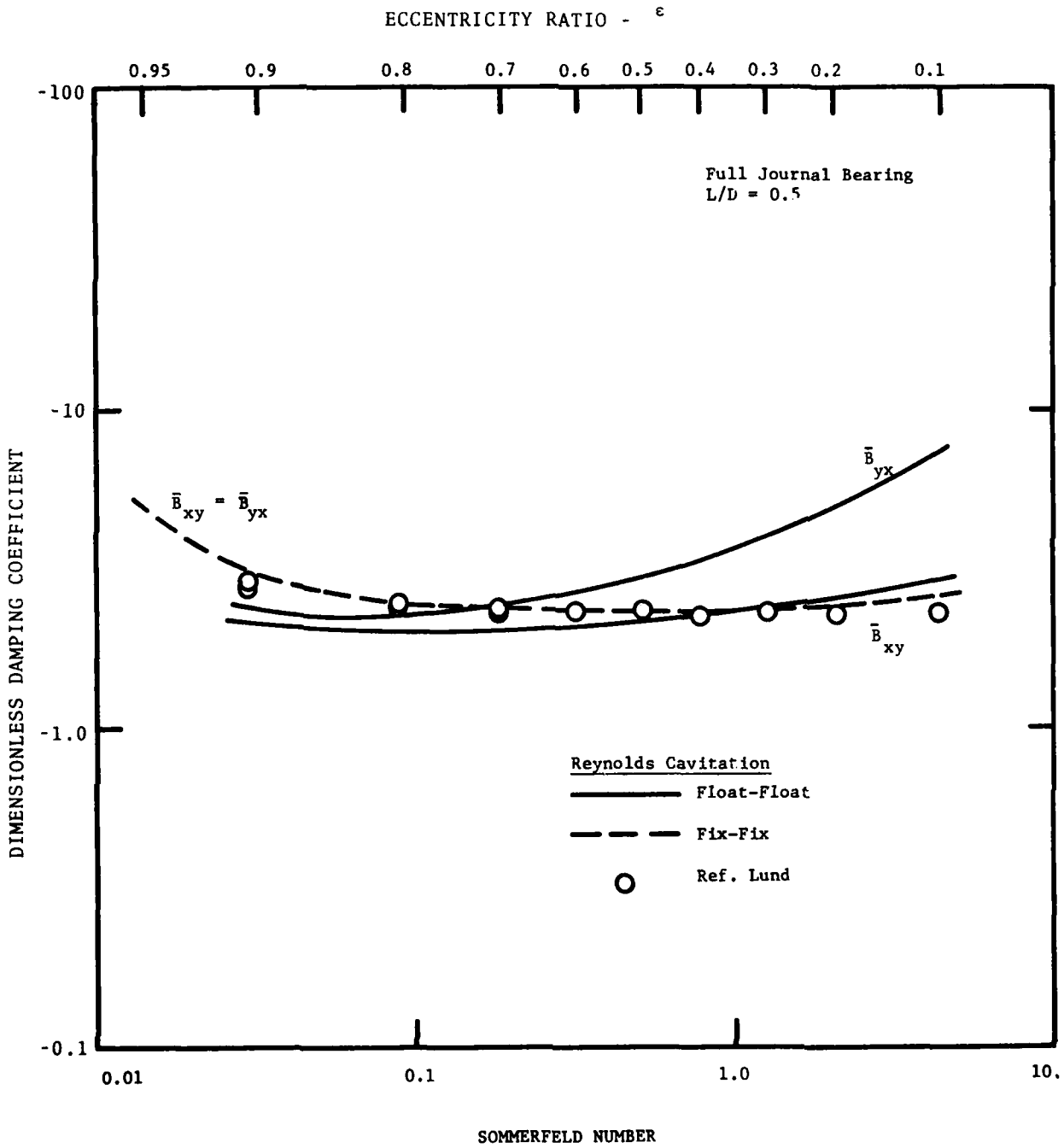

Figure 16 Cross-Coupled Damping vs. Sommerfeld Number for Plain Journal Bearing

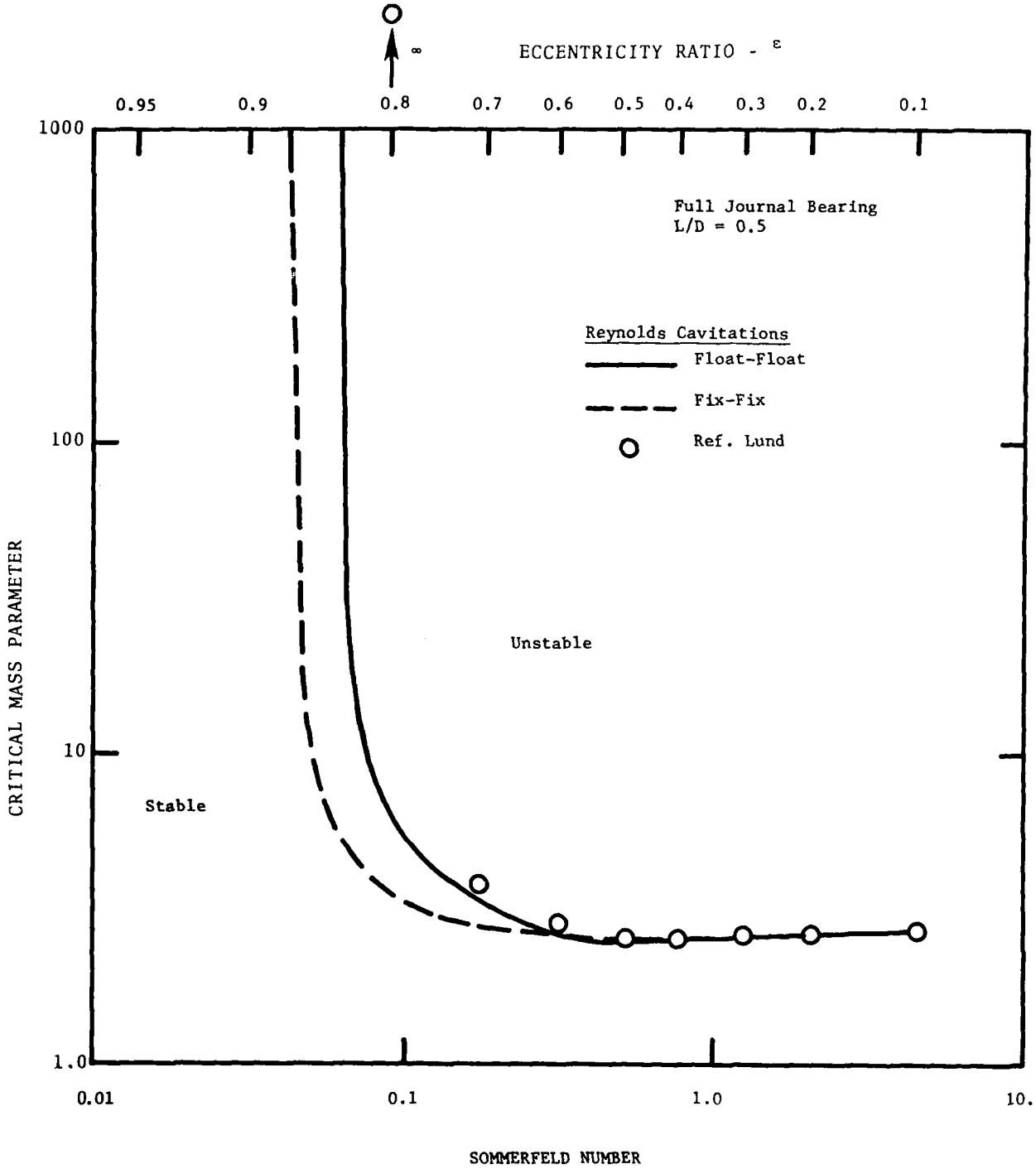

Figure 17 Stability Threshold For Plain Journal Bearing

5.4 Conclusions

This section has presented numerous comparisons for both half Sommerfeld and Reynolds boundary conditions. The results indicate that the half Sommerfeld boundary condition differs from the Reynolds boundary condition by only a few percent in most cases (when the half Sommerfeld condition is properly applied to the dynamic coefficients). Thus the half Sommerfeld boundary condition has been used in this study. Although only the plain journal bearing has been examined in this section, it is believed that these results apply to pad bearings as well. On most pad in a given bearing, the pad will have all positive pressures (due to a fully converging film thickness) or be all cavitated. Usually only one pad would even have a converging-diverging film thickness where Reynolds condition would be applied. It is thus believed that the half Sommerfeld condition is adequate and much faster (in terms of computer time) than the Reynolds condition.

REFERENCES

1. Li, D.F., Allaire, P.E., and Barrett, L.E., (1977), "Analytical Dynamics of Partial Journal Bearings with Applications. ASLE Trans., Vol. 22, No. 2, April 79, pp 99-112.

2. Lund, J.W., (1964), "Spring and Damping Coefficients for the Tilting-Pad Journal Bearing," ASLE Trans., Vol. 7, No. 4, pp 342-352.

3. Lund, J.W., (1966), "Self-Excited Stationary Whirl Orbits of a Journal in a Sleeve Bearing," Ph.D. Thesis, RPI.

4. Nicholas, J.C., Gunter, E.J., and Allaire, P.E., (1977), "Stiffness and Damping Coefficients for the Five Pad Tilting Pad Bearing," ASLE Trans., Vol. 7, No. 4, pp 113-124.

5. Lund, J.W. and Thomsen, K.K., (1978), "A Calculation Method and Data for the Dynamic Coefficients of Oil-Lubricated Journal Bearings," Topics in Fluid Film Bearing and Rotor Bearing System Design and Optimization, Editor, S. M. Rohde, P. E. Allaire, and E. J. Maday, ASME Trans., pp 1-28.

6. Pinkus, O. and Sternlicht, B., "Theory of Hydrodynamic Lubrication," McGraw-Hill Book Company, New York, 1961.

☆U.S.Government Printing Office: 1980 — 657-064/670