AD-A083 321 CONSTRUCTION ENGINEERING RESEARCH LAB (ARMY) CHAMPAIGN IL F/G 20/1
TRUE-INTEGRATING ENVIRONMENTAL NOISE MONITOR AND SOUND-EXPOSURE--ETC(U)
MAR 80 A J AVERBUCH, R BROWN
UNCLASSIFIED CERL-TR-N-41-VOL-4 NL

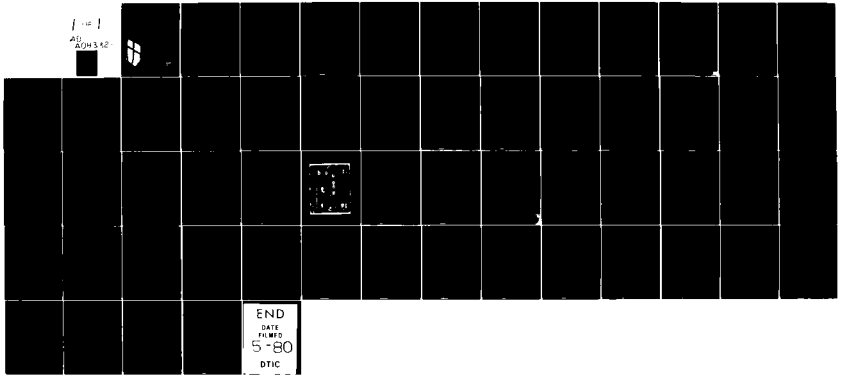

END
DATE FILMED
5-80
DTIC

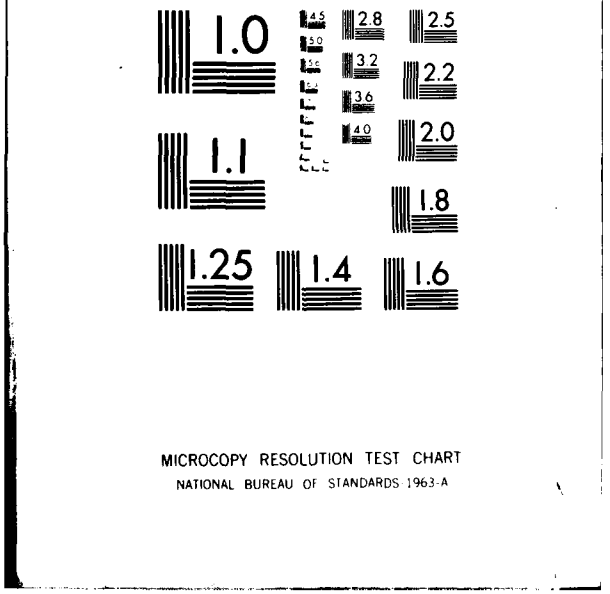
1.0
1.1
1.25
1.4
1.6
1.8
2.0
2.2
2.5
2.8
3.2
3.6
4.0
4.5
5.0
5.6
MICROCOPY RESOLUTION TEST CHART
NATIONAL BUREAU OF STANDARDS 1963-A

(13)

NW

construction
engineering
research
laboratory

United States Army
Corps of Engineers
...Serving the Army
...Serving the Nation

TECHNICAL REPORT N-41
March 1980

Prediction of Noise Impact Within and Adjacent to Army Facilities

LEVEL II

TRUE-INTEGRATING ENVIRONMENTAL NOISE MONITOR AND SOUND-EXPOSURE LEVEL METER
VOLUME IV: MECHANICAL CONSTRUCTION AND ELECTRICAL CHECK OUT

AD A083321

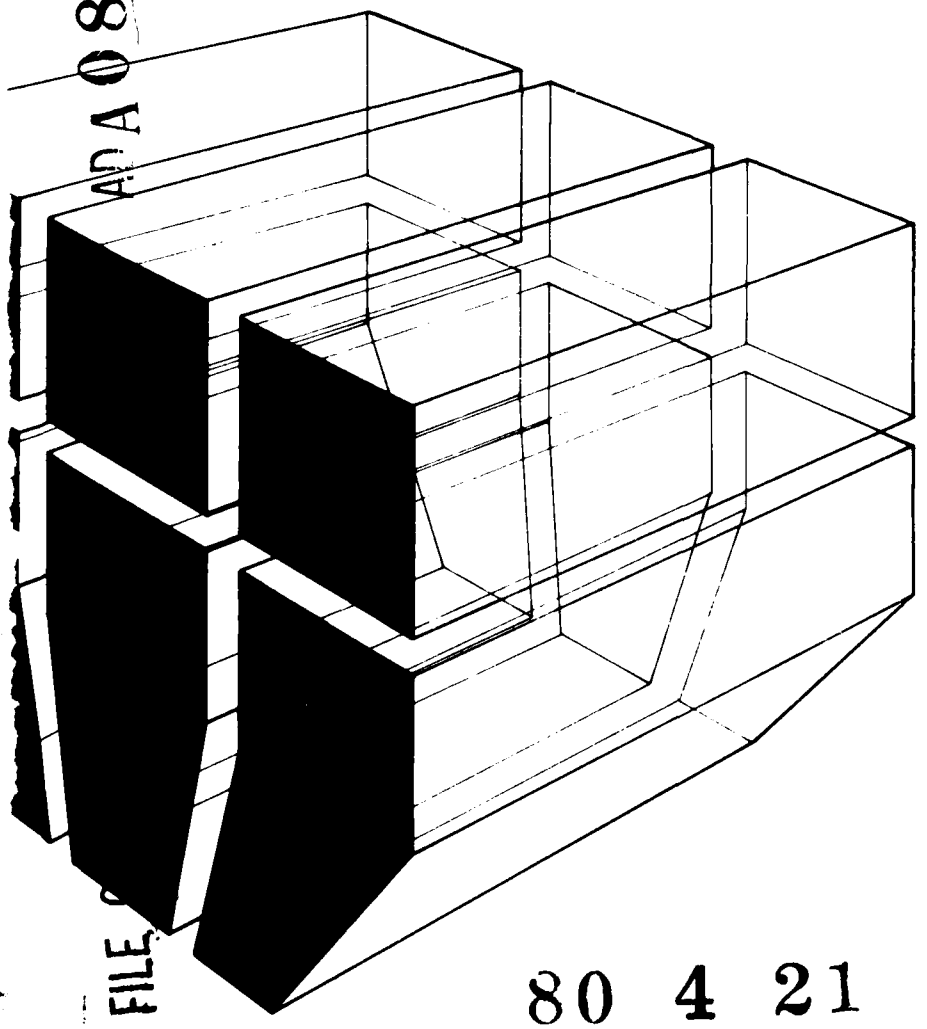

by
A. J. Averbuch
R. Brown

DTIC
ELECTE
APR 22 1980
S D
E

CERL

80 4 21 070

DDC FILE

Approved for public release; distribution unlimited.

The contents of this report are not to be used for advertising, publication, or promotional purposes. Citation of trade names does not constitute an official indorsement or approval of the use of such commercial products The findings of this report are not to be construed as an official Department of the Army position, unless so designated by other authorized documents.

DESTROY THIS REPORT WHEN IT IS NO LONGER NEEDED
DO NOT RETURN IT TO THE ORIGINATOR

USER EVALUATION OF REPORT

REFERENCE: Technical Report N-41, *True-Integrating Environmental Noise Monitor and Sound-Exposure Level Meter, Volume IV: Mechanical Construction and Electrical Check Out*

Please take a few minutes to answer the questions below, tear out this sheet, and return it to CERL. As a user of this report, your customer comments will provide CERL with information essential for improving future reports.

1. Does this report satisfy a need? (Comment on purpose, related project, or other area of interest for which report will be used.)

_____

_____

_____

2. How, specifically, is the report being used? (Information source, design data or procedure, management procedure, source of ideas, etc.)_____

_____

_____

3. Has the information in this report led to any quantitative savings as far as man-hours/contract dollars saved, operating costs avoided, efficiencies achieved, etc.? If so, please elaborate. _____

_____

_____

4. What is your evaluation of this report in the following areas?

   a. Presentation: _____

   b. Completeness: _____

   c. Easy to Understand: _____

   d. Easy to Implement: _____

i. General Comments (Indicate what you think should be changed to make this report and future reports of this type more responsive to your needs, more usable, improve readability, etc.) _____

_____

_____

_____

_____

4. If you would like to be contacted by the personnel who prepared this report to raise specific questions or discuss the topic, please fill in the following information.

Name: _____

Telephone Number: _____

Organization Address: _____

_____

_____

5. Please mail the completed form to:

Department of the Army
CONSTRUCTION ENGINEERING RESEARCH LABORATORY
ATTN: CERL-SOI
P.O. Box 4005
Champaign, IL 61820

SECURITY CLASSIFICATION OF THIS PAGE (When Data Entered)

REPORT DOCUMENTATION PAGE		READ INSTRUCTIONS BEFORE COMPLETING FORM
1. REPORT NUMBER (14) CERL-TR-N-41-Vol-4	2. GOVT ACCESSION NO. AD-A083 321	3. RECIPIENT'S CATALOG NUMBER (9)
4. TITLE (and Subtitle) (6) TRUE-INTEGRATING ENVIRONMENTAL NOISE MONITOR AND SOUND-EXPOSURE LEVEL METER, VOLUME IV: MECHANICAL CONSTRUCTION AND ELECTRICAL CHECK OUT		5. TYPE OF REPORT & PERIOD COVERED FINAL rept. 6. PERFORMING ORG. REPORT NUMBER
7. AUTHOR(s) (10) A. J. Averbuch, R. Brown		8. CONTRACT OR GRANT NUMBER(s) (17)
9. PERFORMING ORGANIZATION NAME AND ADDRESS U.S. ARMY CONSTRUCTION ENGINEERING RESEARCH LABORATORY P.O. Box 4005, Champaign, IL 61820		10. PROGRAM ELEMENT, PROJECT, TASK AREA & WORK UNIT NUMBERS (16) 4A762720A896-03-001
11. CONTROLLING OFFICE NAME AND ADDRESS (11)		12. REPORT DATE March 1980
		13. NUMBER OF PAGES 55
14. MONITORING AGENCY NAME & ADDRESS (if different from Controlling Office) (12) 57		15. SECURITY CLASS. (of this report) Unclassified
		15a. DECLASSIFICATION/DOWNGRADING SCHEDULE

16. DISTRIBUTION STATEMENT (of this Report)

Approved for public release; distribution unlimited.

17. DISTRIBUTION STATEMENT (of the abstract entered in Block 20, if different from Report)

18. SUPPLEMENTARY NOTES

Copies are obtainable from National Technical Information Service
Springfield, VA 22151

19. KEY WORDS (Continue on reverse side if necessary and identify by block number)

noise (sound)
monitors

20. ABSTRACT (Continue on reverse side if necessary and identify by block number)

This volume gives the assembly, adjustment, and checkout procedures necessary to construct a U.S. Army Construction Engineering Research Laboratory (CERL) True-Integrating Environmental Noise Monitor and Sound-Exposure Level Meter. It describes the monitor's mechanical layout, wiring guidelines, adjustments to components to bring various circuits into tolerance, and steps for verifying the correct operation of

DD FORM 1 JAN 73 1473 EDITION OF 1 NOV 65 IS OBSOLETE

405 279

UNCLASSIFIED

SECURITY CLASSIFICATION OF THIS PAGE (When Data Entered)

Block 20 continued.

the monitor. Also included are test programs to be executed by the internal microprocessor to exercise the internal circuit to help checkout or repair.

Accession For	
NTIS GRA&I	☑
DDC TAB	☐
Unannounced	☐
Justification	
By	
Distribution/	
Availability Codes	
Dist	Avail and/or special
A	

FOREWORD

This research was conducted for the Directorate of Military Programs, Office of the Chief of Engineers (OCE), under Project 4A762720A896, "Environmental Quality for Construction and Operation of Military Facilities"; Task 03, "Pollution Control Technology"; Work Unit 001, "Prediction of the Noise Impact Within and Adjacent to Army Facilities." The QCR number is 1.03.011. Mr. F. P. Beck, DAEN-MPE-I, is the OCE Technical Monitor.

The work was performed by the Environmental Division (EN), U.S. Army Construction Engineering Research Laboratory (CERL). Dr. R. K. Jain is Chief of EN.

COL Louis J. Circeo is Commander and Director of CERL, and Dr. L. R. Shaffer is Technical Director.

CONTENTS

		Page
	DD FORM 1473	1
	FOREWORD	3
	LIST OF TABLES AND FIGURES	5
1	INTRODUCTION	7
	Background	7
	Purpose	7
	Mode of Technology Transfer	7
2	ASSEMBLY AND CHECKOUT PROCEDURES	8
	System Assembly	8
	System Adjustment	8
	System Checkout	13
	Environmental Tests	16
	APPENDIX A: Mechanical Drawings	33
	APPENDIX B: Input/Output Test Program	47
	DISTRIBUTION	

TABLES

Number		Page
1	Chassis Assembly Parts List	17
2	Wiring Requirements	19
3	System Characteristics	20
4	Specifications for Power Supply	21
5	Filter Response Requirements	23
6	Deviation in Filter Response Requirements	25
7	Function and Display List	28
8	Recommended Environmental Qualification Tests	31

FIGURES

1	Noise Monitor Chassis Assembly	18
2	Frequency Response Curves of the A-, C-, and D-Weighting Networks	22
3	A-D Converter Input Signal Waveform With High-Level Signal	27
4	A-D Converter Input Signal Waveform With Low-Level Signal	27
5	Front Panel of the True-Integrating Noise Monitor and Sound-Exposure Level Meter	29
6	Wind Threshold Level Switch and Parameters	30

TRUE-INTEGRATING ENVIRONMENTAL
NOISE MONITOR AND SOUND-
EXPOSURE LEVEL METER
VOLUME IV: MECHANICAL CONSTRUCTION
AND ELECTRICAL CHECK OUT

1 INTRODUCTION

Background

This is the fourth volume in a four-volume set of reports which describe the experimental background, use, specifications, and construction of the True-Integrating Environmental Noise Monitor and Sound-Exposure Level Meter developed by the U.S. Army Construction Engineering Research Laboratory (CERL).

This volume, in conjunction with Volume I, User's Guide; Volume II, Wiring Parts Lists, Parts Layouts, and Schematics; Volume III, Microprocessor Program and Data Interface Description; and a set of contractual general provisions constitutes a purchase specification for the CERL noise monitor system.* Although this system is relatively complex and performs a variety of sound recording and analyzing functions, its construction is straightforward; the information in Volumes I through IV should enable an electronics system manufacturer or electronics laboratory to build the CERL noise monitor system.

Purpose

The purpose of this volume is to provide detailed information relative to the construction of the True-Integrating Environmental Noise Monitor and Sound-Exposure Level Meter.

Mode of Technology Transfer

This four-volume set of reports contains the necessary technical information for the purchase specification and construction of the True-Integrating Environmental Noise Monitor and Sound-Exposure Level Meter.

* Volume I published May 1978, CERL Technical Report (TR) N-41/ADA060958; Volume II published June 1979, CERL TR N-41/ADA072002; Volume III, CERL TR N-41, March 1980.

PRECEDING PAGE NOT FILMED
BLANK

2 ASSEMBLY AND CHECKOUT PROCEDURES

System Assembly

All parts for the system must be first purchased or manufactured in the quantities listed in the parts list in Volume II and the chassis hardware list (Table 1). After the basic chassis assembly has been completed, it should appear as shown in Figure 1 (the mechanical drawings are given in Appendix A). At this stage, all hardware and parts may be installed. However, printed circuits must not be inserted until preliminary wiring and power supply checks have been made. Most of the wiring of the chassis is No. 26 (wire wrap) teflon-jacketed wire; exceptions are listed in Table 2. Point-to-point definition of all wiring is contained in the wiring list in Volume II. Standard industry practices should be followed when wiring the chassis and backplane to assure neat and reliable interconnections.

Assembly of the printed circuit boards should also follow standard industry practice. Definition of the parts locations and circuit layouts are contained in the circuit diagrams and drawing sets in Volume II. Care should be taken to insure proper placement of all parts; this will minimize component damage during system checkout.

If all the instructions given in this chapter are followed, the system will exhibit the characteristics shown in Table 3.

System Adjustment

After the chassis assembly has been completed, the chassis wiring must be rechecked, the power supply plugged in (see Table 4 for power supply specifications), and all voltages checked; the backplane connectors must be checked for proper voltages, and the backplane and chassis checked for ground continuity. Board 16 must be inserted carefully, the power selector switch turned to the "AC/Battery" position, a check made to assure that direct current (dc) voltage is present when the 110-volt (V) alternating current (ac) power line is disconnected. With power off, all circuit boards should be carefully installed in their proper slots. When power is first applied, the supply voltages are rechecked to make sure there are no short circuits in the wiring or circuit boards.

The following paragraphs detail the checkout procedures required to make adjustments on the circuit boards. Where adjustments are required on the board, a board extender card should be used. If soldering is required on the board during checkout, the unit should be unplugged from the power line. With power on, the following sequence of operations should be performed (the circuit schematics from Volume II should be used as a guide):

1. Board 15. With a suitable oscilloscope (an instrument with a 20 megahertz [MHz] bandwidth will be required later), check for the presence of a 1 MHz signal at pin ϕD on Board 15 (this point is also available on the backplane). This signal is the master clock that determines the timing for the analog to digital (A-D) converter and many of the other circuits.

2. Board 11. Check for the presence of a 50 kilohertz (kHz) signal (which is divided down from the 1 MHz signal) at pin α11 on Board 11.

3. Board 9. Connect the oscilloscope trigger to the 50 kHz clock signal at pin α10 on Board 9. Adjust the pulse duration at the output of U13 by selecting a value of resistor R8. (To minimize potential damage to the circuit board foil, standoffs should be installed in the circuit boards wherever resistors are selected.) While monitoring pin 10 of U13, select R8 to obtain a positive pulse duration of 3 microseconds (μs) ($\pm$10 percent).

a. The timing sequence now depends on the A-D converter on Board 2. No adjustment is needed, but a signal should return to pin α20 on Board 9 after approximately 4 μs. A negative pulse should be present at pin 7 of U12; adjust the duration to 0.8 μs by selecting an appropriate value for resistor R6.

b. Adjust the positive pulse at pin 10 of U12 to a duration of 3 μs by selecting a resistor value for R7. (Following the second conversion on Board 2, a signal returns on α20 which results in a positive pulse at pin 6 of U11.) To adjust this pulse duration to 1.5 μs, select a value for R4. The oscilloscope should now be triggered by the signal at terminal ϕB on Board 9; this signal should trigger once every 20 μs. Adjust the negative pulse at pin 9 of U11 to a duration of 1 μs by selecting a value for R5.

c. To adjust the wind speed detector circuit, trigger the oscilloscope from the 100 hertz (Hz) signal available at pin α19 on Board 9. Depress the "Test" calibration switch on the front panel in the "Wind Speed Detector" block and hold it down while adjusting R13 to obtain a 100-millivolt (mV) pulse at pin α18 on Board 9. While watching the front panel "Windy" light-emitting diode (LED), adjust R15 until the LED turns on. Then, adjust R13 to obtain a 105 mV pulse at pin α18. Now, whenever the "Test" switch is depressed, the "Windy" LED should light.

d. Check the output at pin 10 of U23 to determine if a pulse of 1/2 to 1 second (s) duration is present. (This value is not critical and should not require adjustment.)

4. Board 4. Adjust the variable capacitor C10 to obtain a 1.8 MHz signal at pin αH on the backplane connector (adjust within ±5 percent). Then adjust the negative pulse width at pin 6 (or at pin αH on the backplane) of U9 to 1 μs by selecting an appropriate value for R5. Next, adjust the positive pulse at αS on the backplane to a 5-μs width by selecting a resistor for R4. The positive pulse at pin αB on the backplane can then be adjusted to a 1-μs width by selecting a proper value for R2. A positive pulse, occurring once every 20 μs at pin 10 of U29 (same as previous pulses), can now be adjusted to a width of 1 μs by selecting a value for R3. Adjust the value of R1 to set the width of the pulse at pin 6 of U26 to 1 μs. Adjusting the value of R8 will set the pulse width at pin 9 of U28 to 1 μs.

5. Board 11. Set all switches identified at U20 and U33 open, except for numbers 6 and 8 on U20 (bits 9 and 11 on the board). This will establish the basic timing rate of the 10 Hz clock. The fastest sampling rate in the block mode is thus limited to 10/s; changes to the microprogram would be required to approach the maximum rate of 100/s. The output pulse of U13 at pin 10 repeats every 100 milliseconds (ms) and should be adjusted to a 2 μs duration by selecting a value for R35. The second half of one-shot U13 should not require adjustment; a 1 ms pulse should be present at pin 6 when an external printer is being used.

6. Board 17. To set the single-event mode recording duration, use switch SW1 on Board 17. A two-digit binary coded decimal (BCD) number, ranging from 0.0 to 9.9, can be set to control the recording time after a predetermined threshold is exceeded. The switch contains two groups of four to set (in a BCD fashion) the two digits corresponding to the number of seconds, with a resolution of 100 ms. Bit 1 on the switch is the lowest-order bit of the least significant digit; bit 5 is the lowest-order bit of the most significant digit. Thus, with only bit 6 closed, the time is set to 2 s. The switch should be set for this standard mode of operation, i.e., recording 2 s after the threshold is exceeded.

Adjust the positive output pulse of U5 to 1 μs duration by selecting a resistor for R21. (One-shots U27 and U16 [both sections] do not require adjustment; U25 provides zeroing of the accumulators when the threshold is exceeded and should not require adjustment.) This output pulse will repeat at the rate of time set by SW1 when the threshold is exceeded.

When two systems are used in a master/slave configuration, a ground connection must be made first between the two chassis. If this is not done, U16, U26, diode 1 and/or diode 2 on Board 17 may burn out and require replacement.

7. Board 18. Provisions are available for identifying each unit with a unique serial number. A six-bit code is wired at pins αN through αU. The one's complement of the desired serial number is wired here with the lower bit on αN and the high-order bit on αU.

a. Use a frequency counter to obtain a signal frequency of 19.2 kHz (±1 percent) at pin ϕ12 on the backplane of Board 18 by adjusting R41. This sets the transmission frequency for the UART.* Connect a signal generator to the front panel connector "Digital Data Input," adjust the level to 1 volt-root-mean-squared (Vrms) at a frequency of 1 kHz. Adjust R39 to obtain a pulse duration of 625 μs at pin 6 of U6.

b. To adjust the voltage-controlled oscillator (U14), connect a +2.5-V dc voltage between pin 9 of U14 and the ground. Adjust R40 until the output frequency at pin 4 of U14 (or pin ϕ11 on the backplane) is 4.8 kHz.

8. Board 19. This slot in the card cage is reserved for memory expansion; a duplicate of Board 14 must be placed here.

9. Board 20. No adjustments are required on this extra read-only memory (ROM) board.

10. Board 21. This board is on the front panel and forms the support for the display. No adjustments are required but the Hewlett Packard display chips should be selected with the same letter or color dot so that their relative intensities match.

11. Board 22. The headphone amplifier is mounted on the front panel; it requires no adjustments.

12. Board 1. Each of the two filter boards fits in the number 1 card slot. They consist of an input buffer amplifier, filters corresponding to American National Standards Institute (ANSI) standards, and a multiplexer to allow the user to choose the desired filter. The maximum input voltage is 10 Vrms, resulting in approximately a 10-volt-peak (Vpk) at the A-D converter input.

a. Set the "Analog Input Selector" to Mic 1 to Channel 1, Mic 2 to Channel 2, and set both Channel 1 and 2 filter selectors to "Flat." Insert a 1 kHz, 1 Vrms sine wave signal to the "Analog Input" of the channel being adjusted. Connect a voltmeter to the "Filter Output" connector and read the voltage; this should be approximately 0.7 Vrms with the selector set to "Flat." Check the frequency response from 2 Hz to 20 kHz; it should be flat with ±1 decibel (dB).

* The Universal Asynchronous Receiver/Transmitter (UART) is a large-scale integrated circuit used to convert a parallel stream of data (eight bits at a time) to a serial stream with start and stop bits and a parity bit (if requested). The circuit can also simultaneously perform the reverse operation while checking for overrun (failure to retrieve data before reception of next data), and correct parity and framing (failure to receive stop bit when expected).

b. Change the filter selector to A-weighting, set the signal generator to 1 kHz, and adjust R13 to obtain the same output voltage as obtained in the "Flat" position. Switch to C-weighting and adjust R15 in the same fashion. Then switch to D-weighting and adjust R33. This completes the gain adjustments on the filter board; both boards are adjusted in the same manner.

The frequency response of each filter is illustrated by the curves shown in Figure 2 and by the tabulated values in Table 5. Tolerances required by the appropriate ANSI and International Electronics Corporation (IEC) specifications are listed in Table 6. Six to 10 frequencies in the range of 10 Hz to 20 kHz should be selected to check compliance with these requirements.

13. Board 2. First, set all positions of SW1 open and all potentiometers approximately midrange. For proper alignment, an oscilloscope with a bandwidth of at least 1 MHz (more than 20 MHz is desirable) and a 1 mV per major division sensitivity is required. Using an oscilloscope makes it possible to neglect transients on the signal lines; however, these transients do not affect system operation. For the following board adjustments, Channel 1 and 2 input selectors should be set to ground and the "Analog Input Selector" set to input Mic 1 to Channel 1.

a. Adjust R5 to obtain a 0-V offset at TP14, the output of amplifier U14 using the oscilloscope. Similarly, adjust R6 to obtain a 0-V offset from the output of U15 at TP15.

b. Trigger the oscilloscope using the negative edge of the signal called "HOLD" on pin αJ of Board 2. Next, adjust the sample and hold, U6, while watching the waveform at TP6. The oscilloscope display will show an initial transient followed by a flat level, representing the voltage being sampled. Adjust R11 to obtain a 0-V offset of this flat level. Following a second transient is a flat segment representing the hold waveform. To obtain a zero offset of this hold level, adjust the internal screw on the sample and hold amplifier, U6.

c. Adjust the gain amplifiers. R20 is adjusted to obtain a zero offset voltage from the output of U11 at TP11. At this point, the signal which was seen at TP6 should be twice as large (gain = 2). U12, a gain of 16 amplifier, has its output at TP12 adjusted to zero using R7. U5, a sample and hold amplifier, has an initial hold segment (following the second transient) set to zero using the internal adjustment screw. Adjust the gain of 32 amplifier, U8, by using R15 to set the signal at TP8 to zero. At TP9, set the output of U9 to zero using R12. (This adjustment may have little effect.) Adjust the offset of the A-D buffer, U7, monitored at TP7, to zero using R25. (This adjustment also has little effect.)

d. The gain of the A-D converter, U7, is established by the setting of R26, which should be set at midrange (a noncritical adjustment). The following adjustment requires proper operation of Boards 4 and 9:

(1) Change the Channel 1 filter selector to "Flat."

(2) Change "Analog Input Selector" to Mic 1 to Channel 1.

(3) Insert a triangle wave at the analog input at a 1-V peak level and frequency between 20 and 100 Hz. When R27 is properly adjusted, the signal at TP7 should appear as shown in Figure 3. Trigger the oscilloscope off the input signal. Varying the input to approximately a 50-mV peak will yield a waveform similar to that shown in Figure 4. Careful adjustment of R27 will insure that range changing occurs at the same level on the positive and negative excursions of the signal.

After the board adjustments are completed, the system should be placed in mode 2 and both Channel 1 and 2 input switches grounded. Set the "Function" switch to "Level" for each channel in sequence and display the equivalent continuous sound level Leq).* Adjust R5 and R6 (for Channels 1 and 2, respectively) on Board 2 to obtain the lowest noise level. If the display is less than zero, add a gain constant to allow the adjustment to be made. If the display is greater than +8 dB (gain constant = 0), there is a noise problem in the system.

System Checkout

After all circuit boards are adjusted, the system should be ready for final checkout and calibration. When the unit is first turned on, the display should show the numbers 6414. Place the "Function Shift" switch to the black position, set the "Function" switch in sequence to the following positions, and verify the indicated display (Table 7). (See Figure 5 for control locations.)

Now check the front panel LEDs. Turn the "Function" switch to "Mode of Operation" and set all data entry switches to zero. Press "Display" and "Execute"; mode 0 and the "Standby" LEDs should now be on. Depress the "Start" switch; the "Standby" light should extinguish and the "Start" light should turn on. To turn off the "Start" light, depress the "Sample" switch. To turn on the mode 1 and standby light, enter a 1 via the data entry switches. Now enter numbers 2 through 9 to check the correct operation of the remaining LEDs on the front panel. Check the remaining data entry switches by switching to "Storage Format," entering individual bits, and reading the octal codes in the display.

* The L_{eq} is the steady level, in A-weighted decibels (dBA), that would produce the same A-weighted sound energy over a stated period of time as a time-varying sound.

Set the mode of operation to 2 and insert a 1-kHz sine wave at a 1-Vrms level to the Channel 1 analog input. Check the display (switch set to Leq position) to verify that each of the three filter settings and "Flat" result in the same reading. With the filter switch set to "Ground," the display should read between a negative value and +8 dB. The "Analog Input Selector" can now be set to Mic 1 to Channel 1, Mic 2 to Channel 2, and the same checks made on Channel 2.

Accuracy of Complex Waveform

To check the accuracy of the measurement of complex waveforms, a prime feature of the system, insert a square wave at a level greater than a 10-V peak; also set the input filter selector to "Flat" and the "Mode of Operation" to 2. If the gain constant is zero, the input can be increased until the display shows the maximum displayable value of 102.3 dB; this value corresponds to an input level of between an 11- and 15-V peak. Set the input level to obtain a display of 100 dB and use an oscilloscope to measure the peak value of the input signal. Change the function generator from square wave to triangle wave and set the input signal to the same peak value. The display should show a decrease of 4.8 dB. When a sine wave with the same peak value as the square wave is inserted, the display should decrease 3.0 dB. These variations in level should be independent of frequency.

Linearity of the System

Check the linearity of the system to assure that the digital conversion of the signal is correct. The input signal, a 1-kHz sine wave, should be passed through a precision attenuator with a total range capability of 100 dB with a resolution of 1 dB. The input signal level can thus be stepped through the full range of the system; the display will verify that the system's linearity is correct.

System Frequency Response

To check the system frequency response, and to verify proper operation of the complete system (including the display), repeat the steps described in Systems Adjustment (p 8) and Figure 2 and Table 6. When operating in a dual channel mode, the signal sampling frequency is 25 kHz; thus, a noticeable beat may be observed as the input signal frequency approaches 20 kHz. The low-frequency response may be changed by closing contacts on SW1 on Board 2 to provide response down to 0.2 Hz. This response may be checked using a low-frequency oscillator.

Distortion

Check the distortion of the signal passing through the input amplifier and filter section by setting the filter selector to "Flat," inserting a sine wave near the maximum signal level at the "Analog Input," and using an oscilloscope to examine the waveshape of the "Filter Output" for distortion.

Crosstalk

Check for crosstalk between Channels 1 and 2 and for correct wiring of the "Analog Input Selector" by setting the "Function" switch to "Level, Most Recent Values" of Channel 1. With a nominal level input signal to Channel 1, set the "Analog Input Selector" to Mic 1 to Channel 1. The signal level should be displayed for the function switch set to Channel 1, but should read zero when set to Channel 2. Set the "Analog Input Selector" tc Mic 1 to the Channel 1 and Channel 2 position; the level displayed for both channels should read within 0.3 dB. (Slight differences can be caused by the input dividing networks.) Set the "Analog Input Selector" to Mic 1 to Channel 1 and Mic 2 to Channel 2. The display for Channel 1 should read the appropriate value, but when switched to Channel 2, the level should drop at least 50 dB. Insert the signal at the Channel 2 input to observe the crosstalk from Channel 2 to Channel 1.

"Speaker/Headphone" Amplifier

Check the "Speaker/Headphone" amplifier by inserting, in sequence, a signal into each channel and measuring the signal at the "8Ω" output. The response at this point should be reasonably flat from 80 Hz to 20 kHz at a signal level of approximately 2 V with an 8-ohm load. Check the "Volume" control and the channel selector switch to verify that they are wired correctly.

Wind Speed Detector

The wind speed detector circuitry has been previously adjusted and thus should be operating. The system has been designed to use a Weather Measure W200S wind speed sensor. This sensor produces an output of 0.24 Vrms/km/hr. Use the "Threshold Level" switch to check the threshold or the wind speed at which the "Windy" light will come on. The circuit and sensitivity parameters of this switch are shown in Figure 6. The wind meter is connected through either J19 or J20 (both are wired together) on the system enclosure.

General

Other features of the system, such as digital recording of data, require a cassette recorder and reference to the internal computer program in Appendix B. Also, two positions of the "Function" switch incorporate functions used for further system tests. These are also described in Appendix B.

The UART, Board 18, can be checked by connecting an oscilloscope to the "SAMPLE TIME" connector on the front panel and setting the system to mode 4. When the "Start" switch is depressed, digital information will be visible on the oscilloscope. A 2.4-kHz carrier at approximately a 1-V peak-to-peak level will be present and the digital data will cause this carrier to be modulated between 1.2 and 2.4 kHz. The program in

Appendix B will allow digital data to be written on a cassette to be reinserted at the "Digital Data Input Connector" and reanalyzed. A coaxial cable can also be used to transfer digital data between the two connectors to rough check the system function. However, the input circuitry is expecting a signal which is phase-inverted compared to the signal at the "Sample Time" connector.

External operation of the system can be checked by inserting a 12-V pulse of at least 2 μs duration into the "Start" and "Sample" BNC connectors. With the system in mode 4, sequenced input pulses will cause a block of data to be taken. To check, read the "Most Recent Values" and the "Next Block Storage Location" -- the number should increase. These two inputs ("Start" and "Sample") are also used to operate two systems in parallel or as master and slave. This mode of operation is described in Volume I.

Environmental Tests

In the event systems of the type described here are manufactured, it is desirable that they meet a set of environmental qualification criteria. During environmental testing, the frequency response, gain, and noise measurements should remain the same as previously measured under standard conditions. This will help insure a reliable noise monitoring system that will withstand most environmental extremes.

The environmental tests listed in Table 8 are derived from Military Standard (MIL STD) 810C, Environmental Test Methods (10 March 1975); MIL STD 810C contains procedures appropriate for systems of the type described here. Since formal tests performed according to the standard may be expensive, it may be desirable to modify the procedures to match the actual environment.

System performance guidelines must be established in conjunction with the environmental tests. The limits of variability and the allowable operational failure modes should be clearly established before testing. These limits should be related to the tasks planned for the monitors and the degree of precision expected.

Table 1

Chassis Assembly Parts List

Item	Drawing/Part Number	Quantity
Enclosure	Zero KU3DA39F22	1
Control panel	--	1
Top panel	--	1
Back panel	--	1
Side panel	--	1
Side plate	--	2
Shield (circuit board)	--	2
Board retainer	--	1
Hinge	--	1
Handles	--	2
Card guides	Waldom/Bivar E-800 Econ-O-Gides	18 (shorten to 6-3/4 in.)*
Power switch shield	--	1
T-bar support	--	1
Rubber bumpers	H.H. Smith 2193	4
Power supply	SCI UPS 12-2T3	1
12-V battery	Gates 0800-0008	1
Card extender	Vector 3690	2 (required for checkout)
PC card connectors	Vector R644-1	36

*171.45 mm

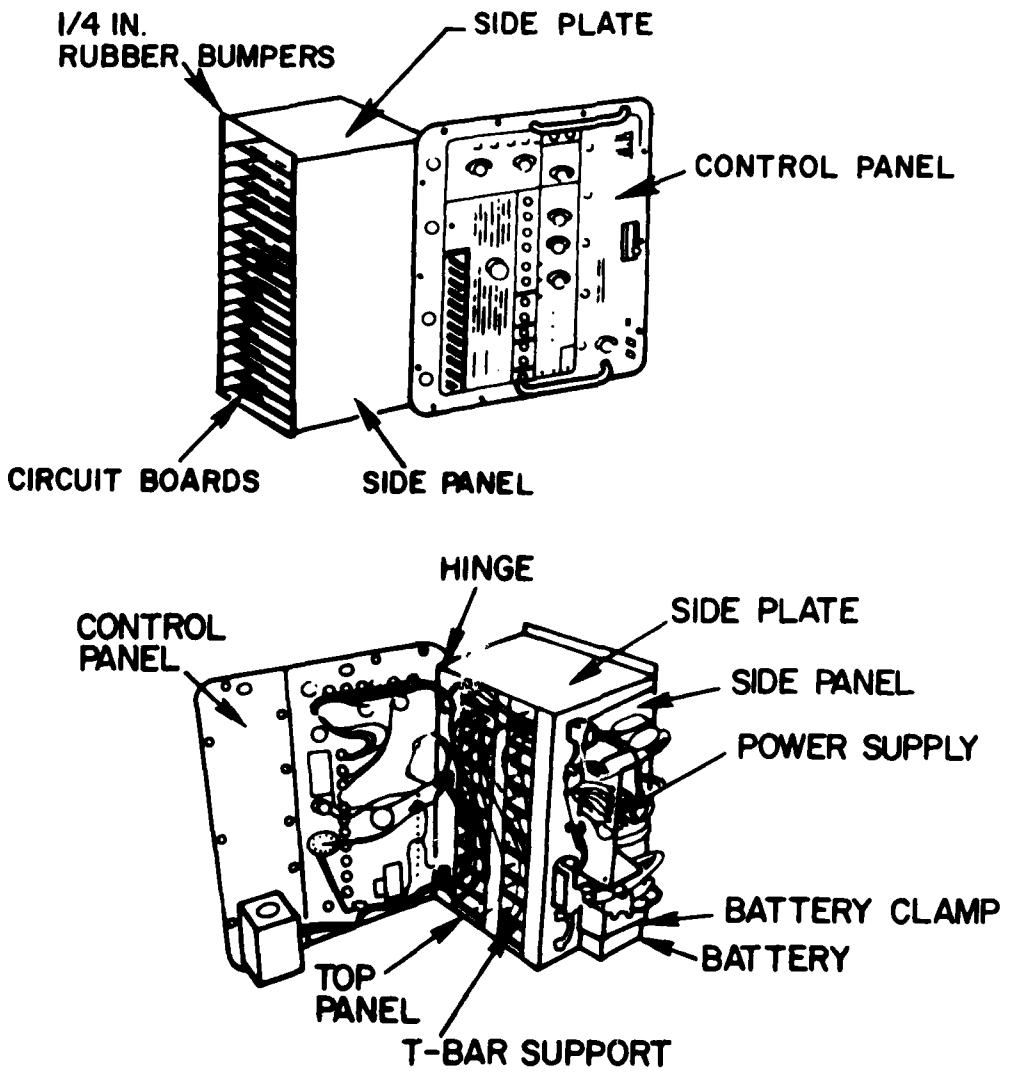

Figure 1. Noise monitor chassis assembly.

Table 2

Wiring Requirements

Chassis to Case

J15 (amphenol 14 pin) to J19 and J20 (Mic 1 and 2) on case;
2 shielded audio lines (RG174/U) + 10 lines No. 24

J16 (in-line 5 pin) to J18 (power);
three-conductor power + two-conductor zip cord (No. 14)

J14 (in-line 9 pin, four conductors used) to J21 (master/slave);
seven-conductor cable (no shield)

J13 (amphenol 50 pin) to J17 (printer);
52-conductor cable (no shield) + audio coax

Front Panel to Chassis

Data entry switches: commons wired with No. 26 tinned bus wire wipers; No. 26 wire wrap to backplane

Display: No. 26 wire wrap

Function switch: No. 26 wire wrap

Channel 1 and 2 filter select switches: No. 26 wire wrap
Digital section: No. 26 wire wrap
Input and output connectors: RG174/U coax
(all insulated binary coded decimals [BNC]);
grounds on input connectors are common;
filter output grounds are common

Mode of operation for light-emitting diodes (LEDs):
commons with bus wire; wire wrap to other pins;
RTV covering after wired

Speaker/headphone amp: ground board to audio shields;
tie to backplane ground

Control section: digital data input connector (insulated) coax to backplane; start & sample connectors grounded (ground lug added here and wired [No. 22] to battery fuse alarm switch);
switches all wire wrap

Wind speed detector: one coax line to backplane

Analog input selector: sample time BNC (grounded) coax to backplane
Tape motor control: wire wrap to backplane

Power (ac), fuses: No. 18 stranded to power supply and backplane and battery;
Sonalert and relay mounted in shield box

BP: all interboard wiring No. 26 wire wrap

Table 3

System Characteristics*

Microphone input:	designed for use with B&K 4921 outdoor microphone system
Signal input range:	100 V to 10 Vrms
Input impedance:	10 kohms
Frequency response:	flat 2 Hz to 20 kHz 0.2 Hz to 20 kHz } Selectable by switch on Board 2 A- and C-weighting per American National Standards Institute (ANSI) specification S1.4-1971 D-weighting per International Electronics Corporation (IEC) specification 537-1976
Signal sampling frequency:	50 kHz for single channel operation 25 kHz per channel for dual channel operation
Outputs:	Analog, flat, or weighted at 75 ohms Speaker/headphone: 2 V at 8 ohms (80 Hz to 20 kHz) Digital 36 lines parallel with 2 additional handshaking lines
Digital data input:	Serial, 300 baud, eight bit + parity
Power requirements:	110 V ac; 20 watts (w) or 12 V dc external 1.4 A (80 Ah marine battery recommended) A-hour-marine Internal 12 V dc 1.4 A (3-hour operation)
Enclosure:	Size -- 20-1/8 x 16-7/8 x 15-1/4 in. Complies with MIL-T-945 Sealed, automatic pressure relief at 3.5 psi vacuum and 2.5 psi pressure Gasketed inner panel
System Weight:	65 lb
Operating Temperature:	-15 to +60°C

*Metric Conversion Factors:

1 in. = 25.4 mm
2 psi = 6.895 kPa
1 lb = .4536 kg
1°F = 1.8 x °C + 32

Table 4

Specifications for Power Supply*

Output Voltage (V)	Regulation (%) Line	Load	Ripple Voltage (mV)	Output Current (A)	Function
13.5 ± 1%	0.1	0.1	2	1.5	Charger
5 ± 2%	0.2	0.5	7	2.0	Logic
15 ± 1%	0.05	0.05	1	±0.3	Analog

*Manufacturer: Semiconductor Circuits, Inc.
Model No.: UPS 12-2T3
Input: 105 to 125 V ac, 50 to 440 Hz
Operating Temperature Range: -25 to +71°C
Storage Temperature Range: -25 to +85°C

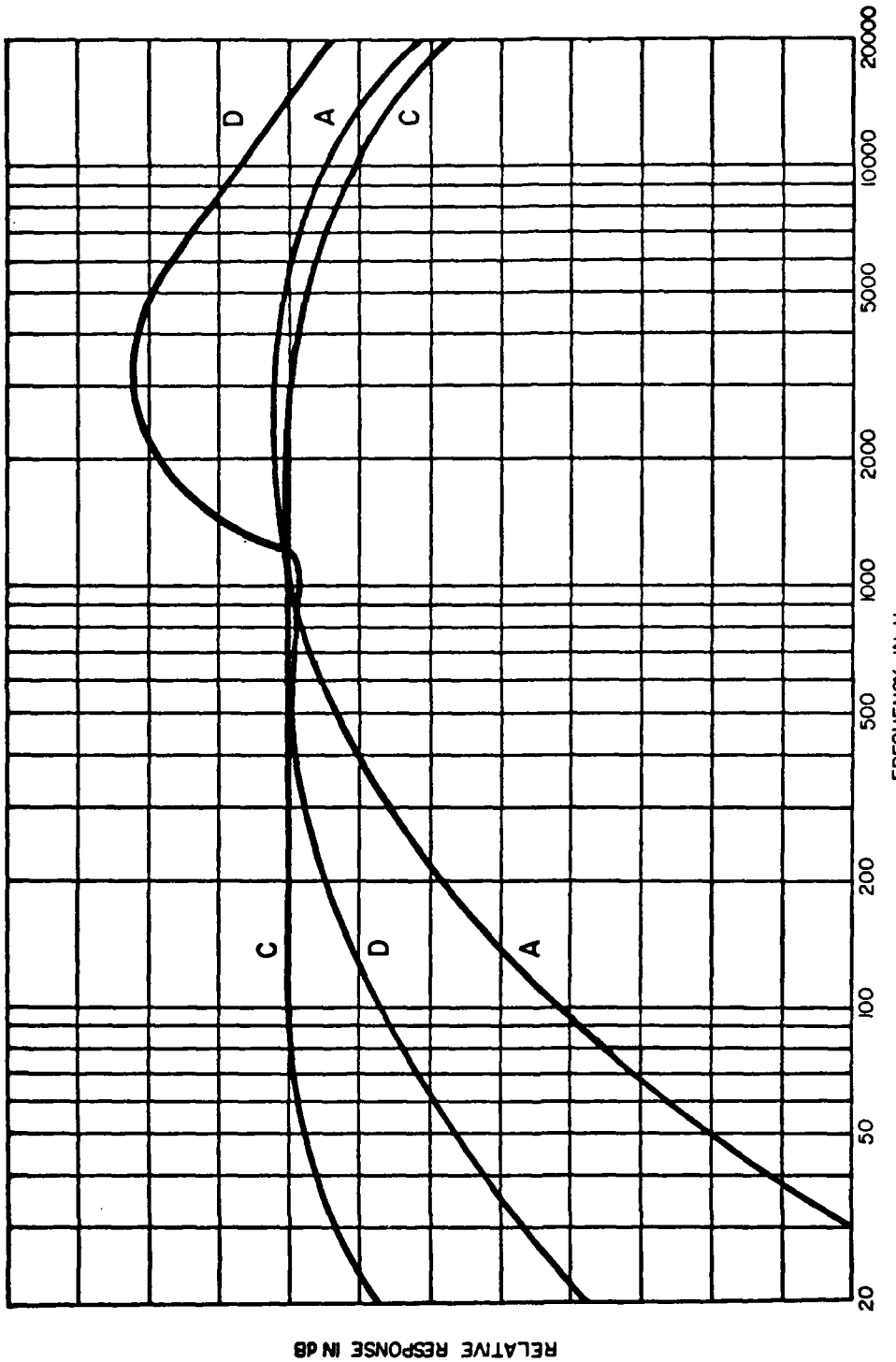

Figure 2. Frequency response curves of the A-, C-, and D-weighting networks.

Table 5

Filter Response Requirements

Frequency (Hz)	A-weighting* Relative Response (dB)	C-weighting* Relative Response (dB)	D-weighting** Relative Response (dB)
10	-70.4	-14.3	-26.6
12.5	-63.4	-11.2	-24.6
16	-56.7	- 8.5	-22.6
20	-50.5	- 6.2	-20.6
25	-44.7	- 4.4	-18.7
31.5	-39.4	- 3.0	-16.7
40	-34.6	- 2.0	-14.7
50	-30.2	- 1.3	-12.8
63	-26.2	- 0.8	-10.9
80	-22.5	- 0.5	- 9.0
100	-19.1	- 0.3	- 7.2
125	-16.1	- 0.2	- 5.5
160	-13.4	- 0.1	- 4.0
200	-10.9	0	- 2.6
250	- 8.6	0	- 1.6
315	- 6.6	0	- 0.8
400	- 4.8	0	- 0.4
500	- 3.2	0	- 0.3
630	- 1.9	0	- 0.5
800	- 0.8	0	- 0.6
1000	0	0	0.0

*According to ANSI S1.4-1971, Specification for Sound Level Meters.
**According to IEC 537-1976, Frequency Weighting for the Measurement of Aircraft Noise.

Table 5 (Cont'd)

Frequency (Hz)	A-weighting* Relative Response (dB)	C-weighting* Relative Response (dB)	D-weighting** Relative Response (dB)
1250	+ 0.6	0	+ 2.0
1600	+ 1.0	- 0.1	+ 4.9
2000	+ 1.2	- 0.2	+ 7.9
2500	+ 1.3	- 0.3	+10.4
3150	+ 1.2	- 0.5	+11.6
4000	+ 1.0	- 0.8	+11.1
5000	+ 0.5	- 1.3	+ 9.6
6300	- 0.1	- 2.0	+ 7.6
8000	- 1.1	- 3.0	+ 5.5
10000	- 2.5	- 4.4	+ 3.4
12500	- 4.3	- 6.2	+ 1.4
16000	- 6.6	- 8.5	- 0.7
20000	- 9.3	-11.2	- 2.7

*According to ANSI S1.4-1971, Specification for Sound Level Meters.
**According to IEC 537-1976, Frequency Weighting for the Measurement of Aircraft Noise.

Table 6

Deviation in Filter Response Requirements

Frequency (Hz)	A-weighting* (dB)	C-weighting* (dB)	D-weighting** (dB)
10	±4	±2.5	+3.0, -∞
12.5	±3.5	±2	+3.0, -∞
16	±3	±2	+3.0, -∞
20	±2.5	+2	±3.0
25	±2	±1.5	±2.0
31.5	±1.5	±1.5	±1.5
40	±1.5	±1	±1.5
50	±1	±1	±1.5
63	±1	±1	±1.5
80	±1	±1	±1.5
100	±1	±1	±1
125	±1	±1	±1
160	±1	±1	±1
200	±1	±1	±1
250	±1	±1	±1
315	±1	±1	±1
400	±1	±1	±1
500	±1	±1	±1
630	±1	±1	±1
800	±1	±1	±1
1000	±1	±1	±1
1250	±1	±1	±1

*According to ANSI S1.4-1971, Specification for Sound Level Meters.
**According to IEC 537-1976, Frequency Weighting for the Measurement of Aircraft Noise.

Table 6 (Cont'd)

Frequency (Hz)	A-weighting* (dB)	C-weighting* (dB)	D-weighting** (dB)
1600	±1	±1	±1
2000	±1	±1	±1
2500	±1	±1	±1
3150	±1	±1	±1
4000	±1	±1	±1
5000	+1.5, -2	+1.5, -2	+1.5, -2
6300	+1.5, -2	+1.5, -2	+1.5, -2
8000	+1.5, -3	+1.5, -3	+1.5, -3
10000	+2, -4	+2, -4	+2, -4
12500	+3, -6	+3, -6	+3, -6
16000	+3, -∞	+3, -∞	+3, -∞
20000	+3, -∞	+3, -∞	+3, -∞

*According to ANSI S1.4-1971, Specification for Sound Level Meters.
**According to IEC 537-1976, Frequency Weighting for the Measurement of Aircraft Noise.

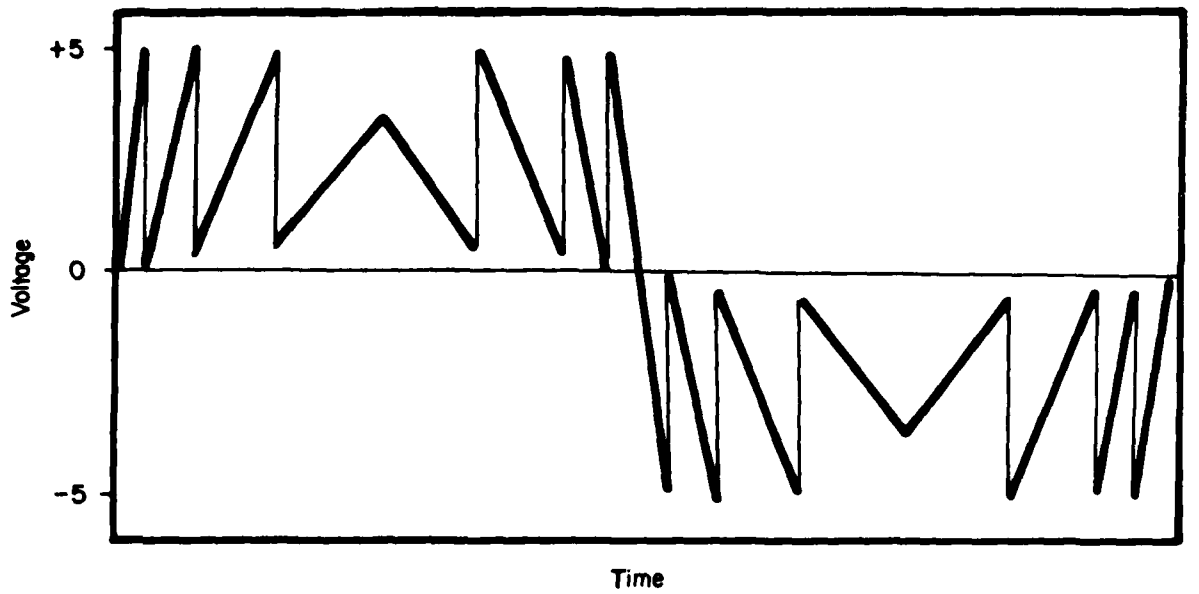

Figure 3. A-D converter input signal waveform with high-level signal.

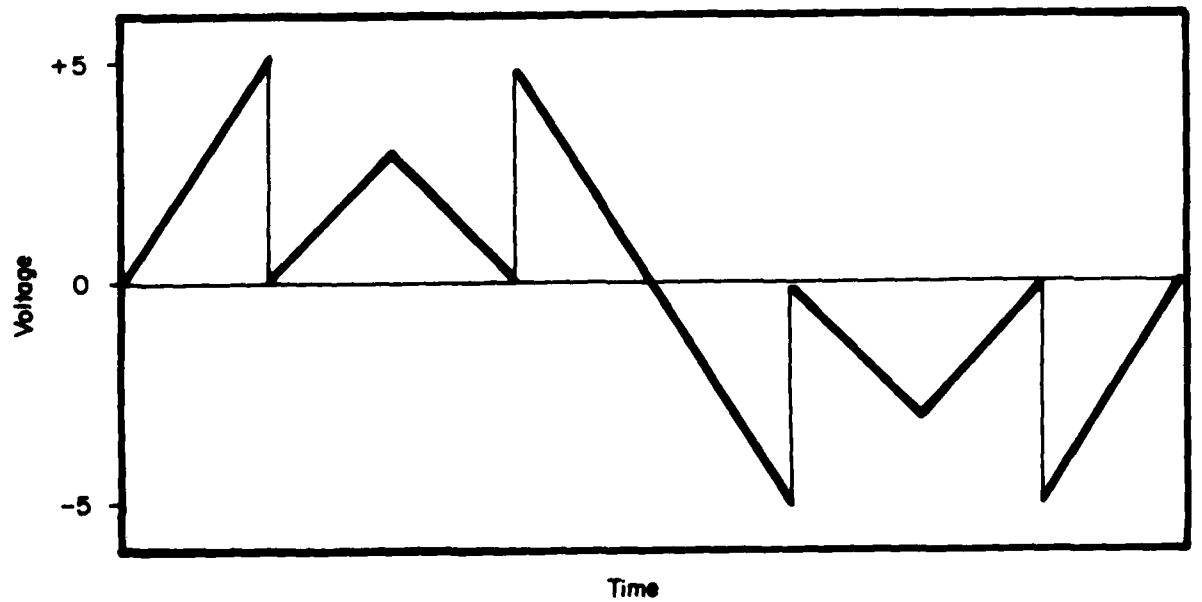

Figure 4. A-D converter input signal waveform with low-level signal (approximately 50 mV peak).

Table 7

Function and Display List

	Function	Display
1.	"Calibrator Level" and press "Display"	90.0
2.	"Mode of Operation" and press "Display"	10
3.	Enter 2 on the BCD data entry switches above "Function" switch and press "Display" and "Execute"	2
4.	"Gain Constant" and press "Display"	0
5.	"Peak Detector Channel" and press "Display"	1
6.	"Accumulation Time" and press "Display"	0
7.	"Storage Format" and press "Display"	6414
8.	"Minisample Recorder" and press "Display"	5.0
9.	Place "Function Shift" switch to white and press "Display"	15.0
10.	Place "Function Shift" switch back to black and place "Function" switch to "Days"; using the data entry switches, enter 364 and press "Execute"; set to "Hours," write or set in 23; set to "Minutes," write 59; wait 1 min and verify that all three numbers return to zero as the real time clock advances	364,23,64
11.	"Function" switch to "Level" and press "Display"	Levels at 10/s rate
12.	"Sample Length" and press "Display"; the display is 1/10 s, which is equivalent to -10 dB	-10
13.	"Visual Data Display" and hold "Display"	1, then random numbers
14.	"External Data Output Starting Location" and press "Display"	1
15.	Return to "Level"; change "Leq/SEL" switch to Leq and verify that the level decreases 10 dB	Variable

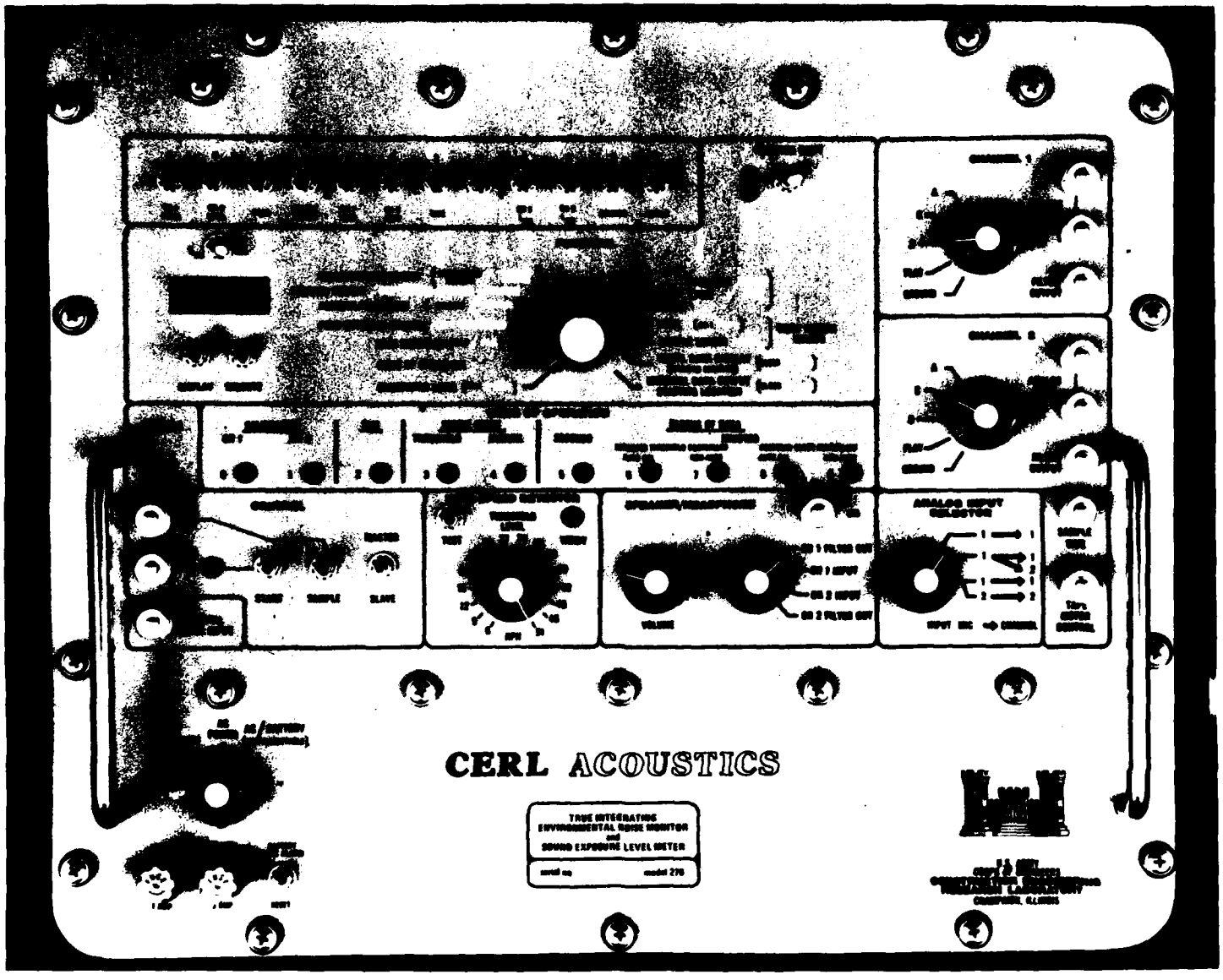

Figure 5. Front panel of the True-Integrating Noise Monitor and Sound-Exposure Level Meter.

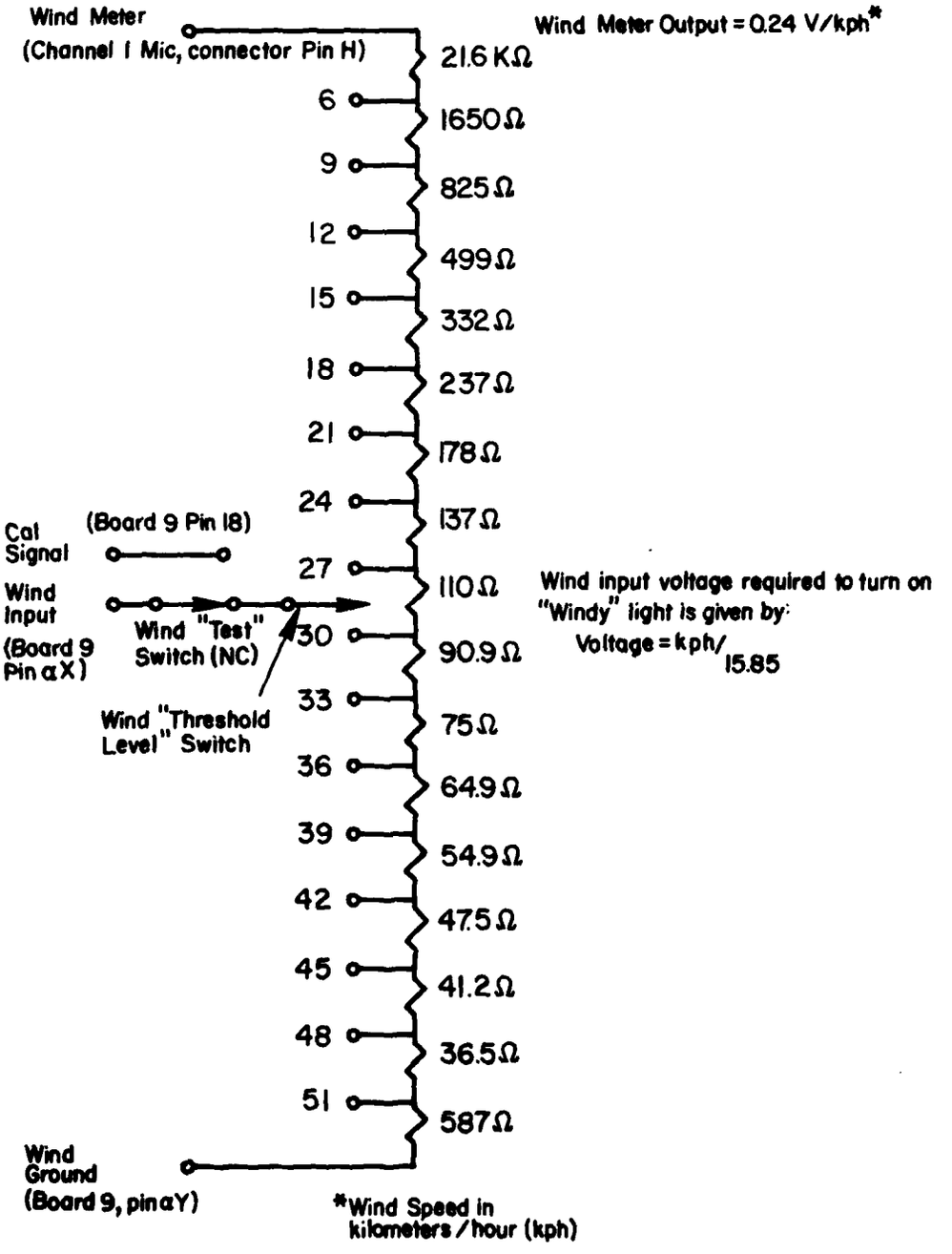

Figure 6. Wind threshold level switch and parameters.

Table 8

Recommended Environmental Qualification Tests

Shock	MIL STD 810C, Method 516.2; Procedure II, transit drop test; and Procedure V, bench handling test.
High temperature	MIL STD 810C, Method 501.1, Procedure II (The high-temperature limit should be +60°C.)
Low temperature	MIL STD 810C, Method 502.1, Procedure I (The low-temperature limit should be -15°C.)
Humidity	The system enclosure can be sealed during operation, possibly making a humidity test unnecessary. However, if the system is used in a very humid climate and must be opened often, it may be desirable to perform a humidity test with the lid open. An appropriate test would be MIL STD 810C, Method 507.1, Procedure III.
Acoustical noise	Although it is not expected that the system will be sensitive to acoustic noise stimulation (with the exception of the microphone) or vibration, an appropriate test to confirm its sensitivity would be MIL STD 810C, Method 515.2; Procedure I, Category A.
Vibration	The acoustical noise test is deemed more appropriate to determine the system's sensitivity to dynamic inputs.

APPENDIX A

MECHANICAL DRAWINGS

PRECEDING PAGE NOT FILMED
BLANK

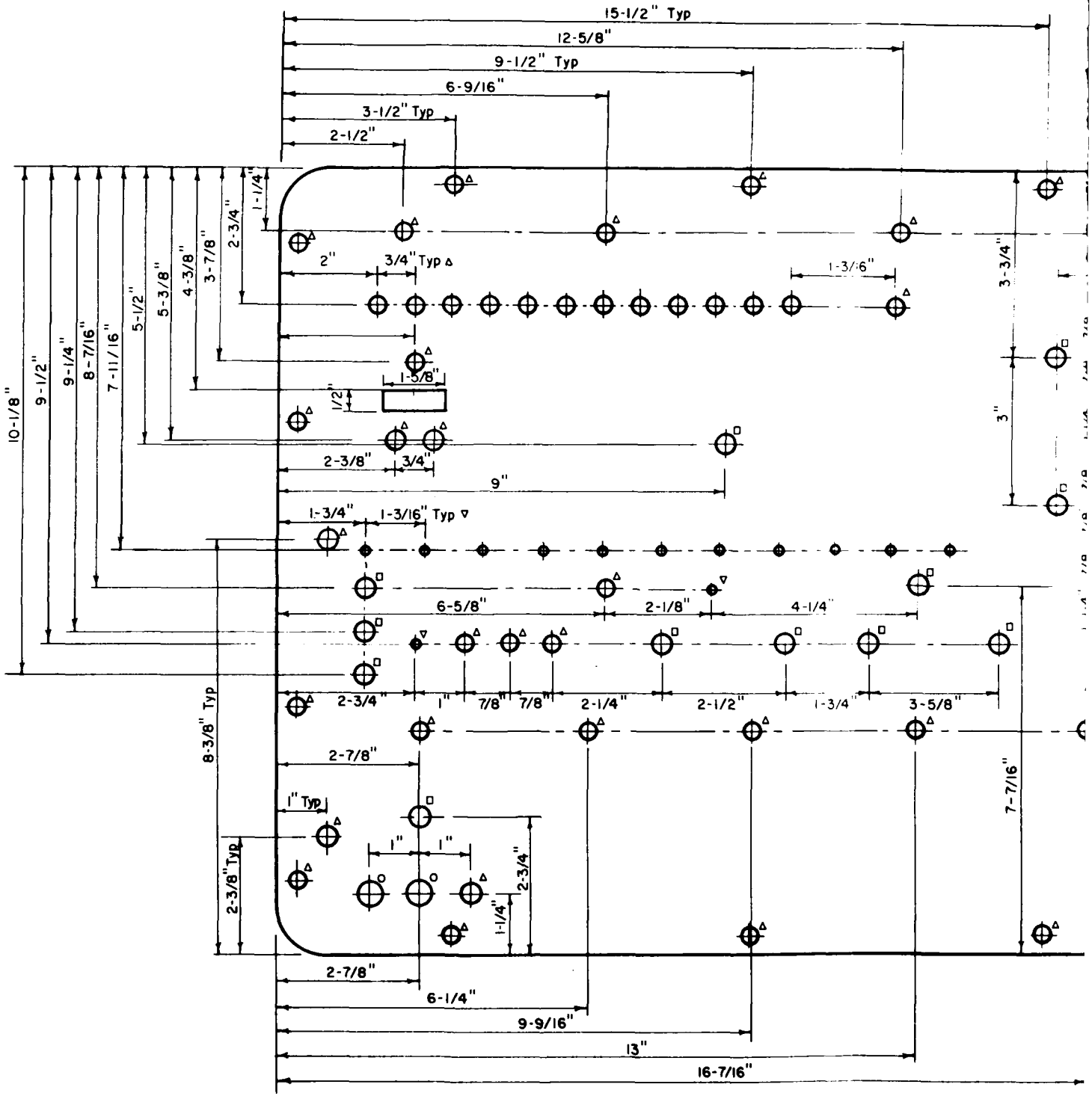
15-1/2" Typ
12-5/8"
9-1/2" Typ
6-9/16"
3-1/2" Typ
2-1/2"
1-1/4"
2-3/4"
3-7/8"
4-3/8"
5-3/8"
5-1/2"
7-11/16"
8-7/16"
9-1/4"
9-1/2"
10-1/8"
2"
3/4" Typ
1-3/16"
3-3/4"
1-5/8"
1/2"
3"
2-3/8"
3/4"
9"
1-3/4"
1-3/16" Typ
6-5/8"
2-1/8"
4-1/4"
2-3/4"
1"
7/8"
7/8"
2-1/4"
2-1/2"
1-3/4"
3-5/8"
8-3/8" Typ
2-7/8"
1" Typ
1"
1"
2-3/4"
1-1/4"
2-3/8" Typ
7-7/16"
2-7/8"
6-1/4"
9-9/16"
13"
16-7/16"

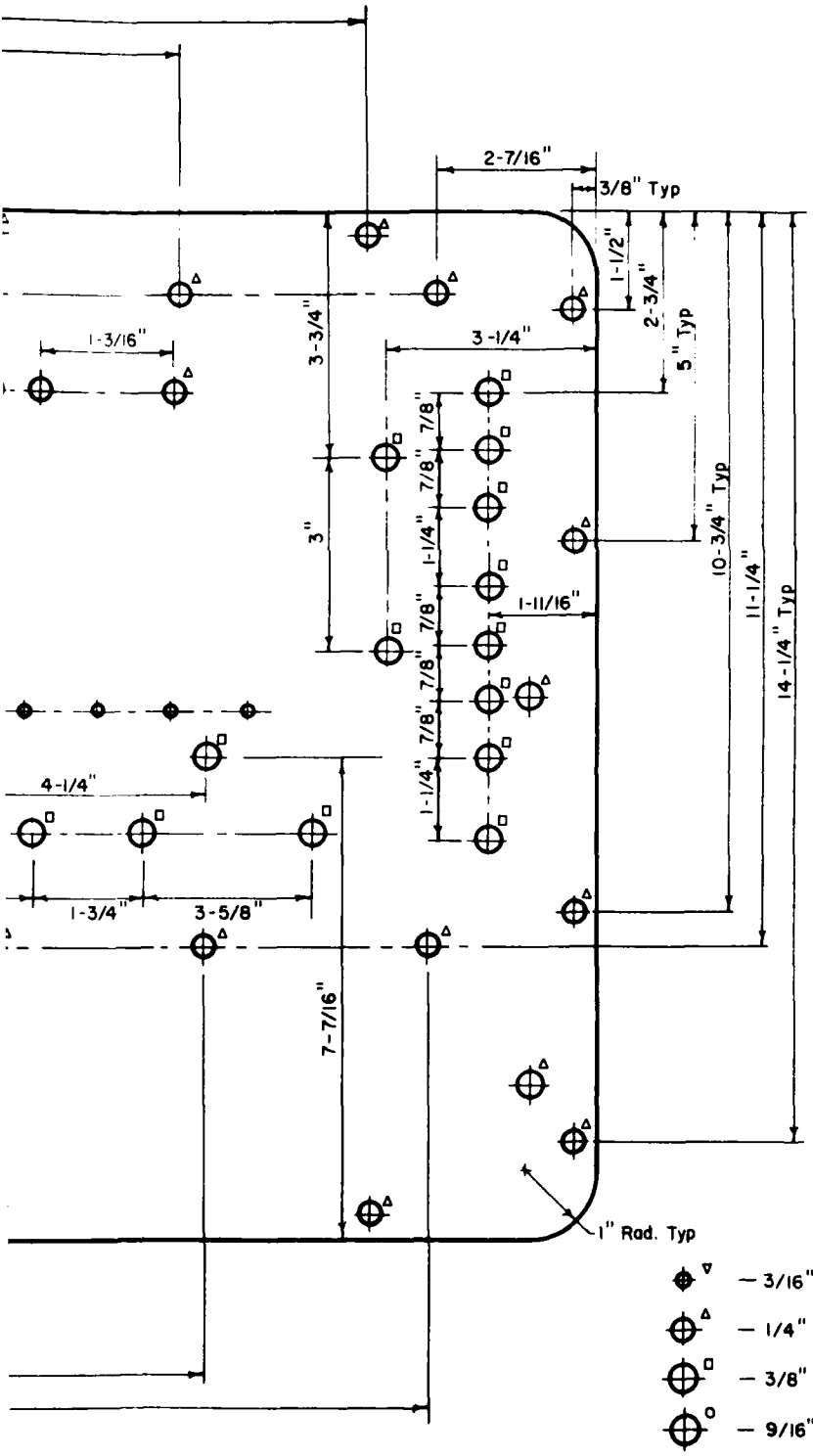

CONTROL PANEL
(1 Req'd.)
Plate Size : 3/32" x 15-3/4" x 19"

▽ — 3/16" Dia. Hole
△ — 1/4"
□ — 3/8"
○ — 9/16"

2

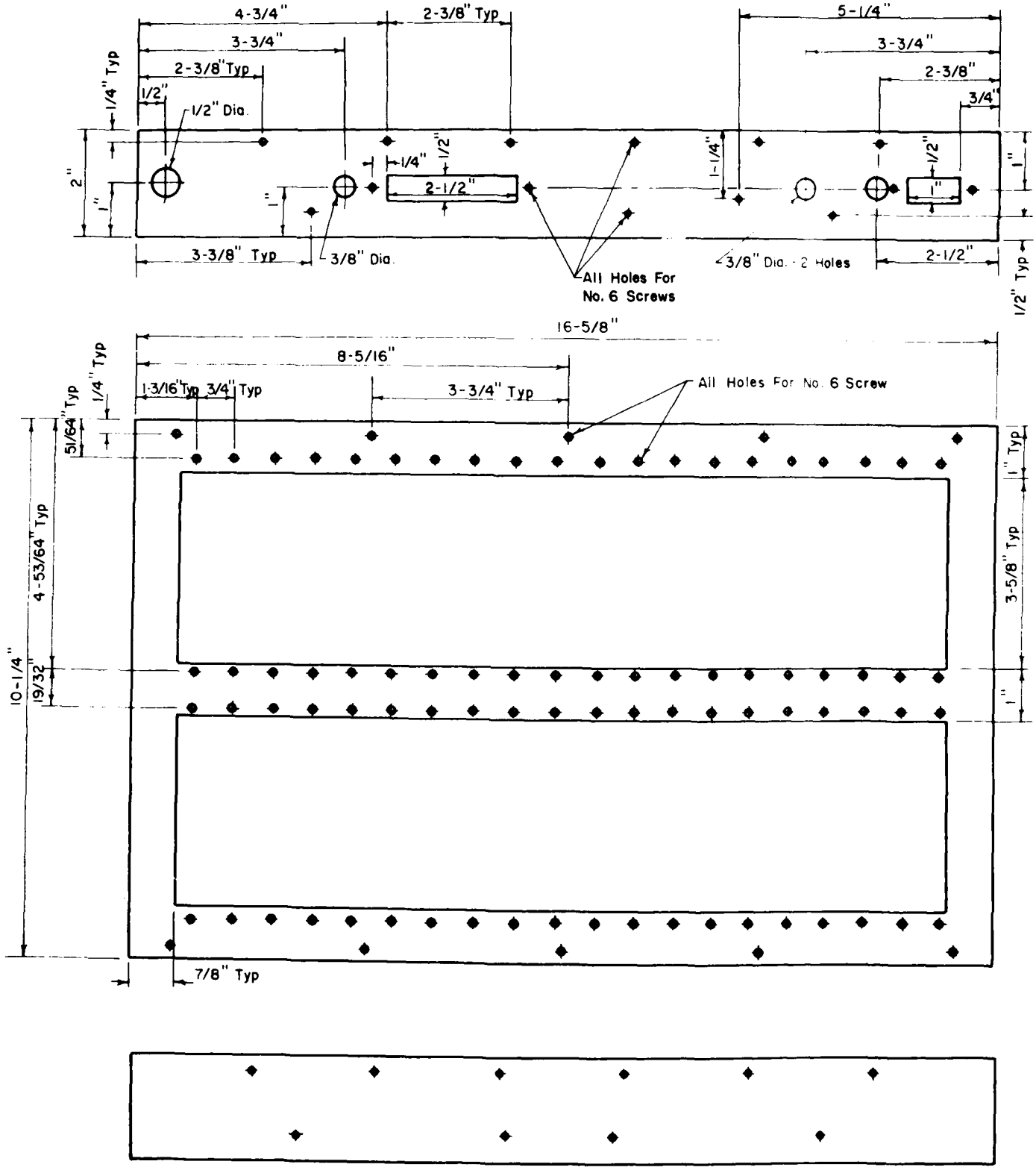
4-3/4"
2-3/8" Typ
3-3/4"
2-3/8" Typ
1/4" Typ
1/2"
1/2" Dia.
2"
1"
1/4"
1/2"
2-1/2"
3-3/8" Typ
3/8" Dia.
All Holes For
No. 6 Screws
5-1/4"
3-3/4"
2-3/8"
3/4"
1-1/4"
1/2"
1"
3/8" Dia. - 2 Holes
2-1/2"
1/2" Typ
16-5/8"
8-5/16"
1/4" Typ
1-3/16" Typ
3/4" Typ
3-3/4" Typ
All Holes For No. 6 Screw
51/64" Typ
4-53/64" Typ
10-1/4"
19/32"
1" Typ
3-5/8" Typ
1"
7/8" Typ

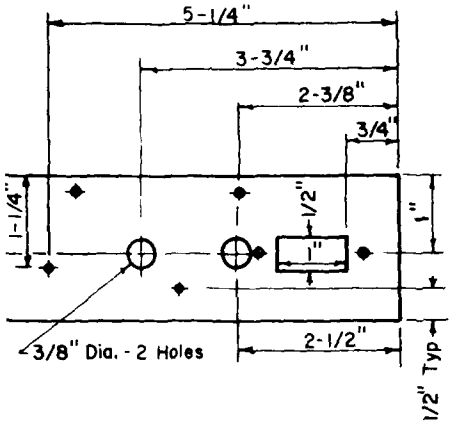

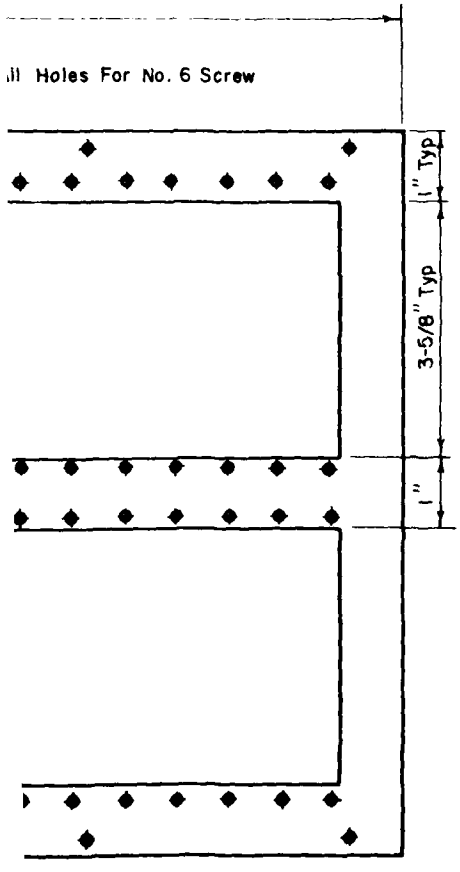

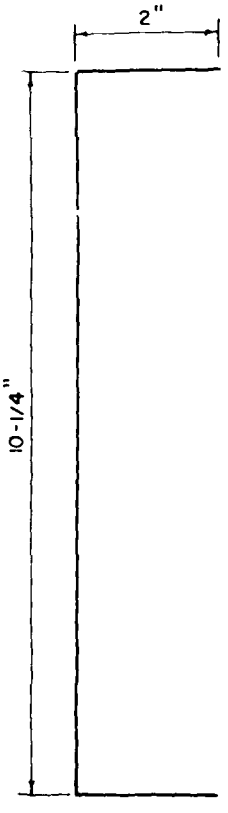

BACKPLANE MOUNTING PANEL (1 Req'd)

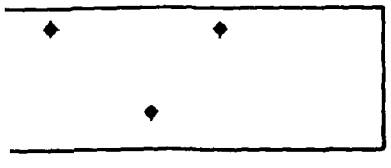

2

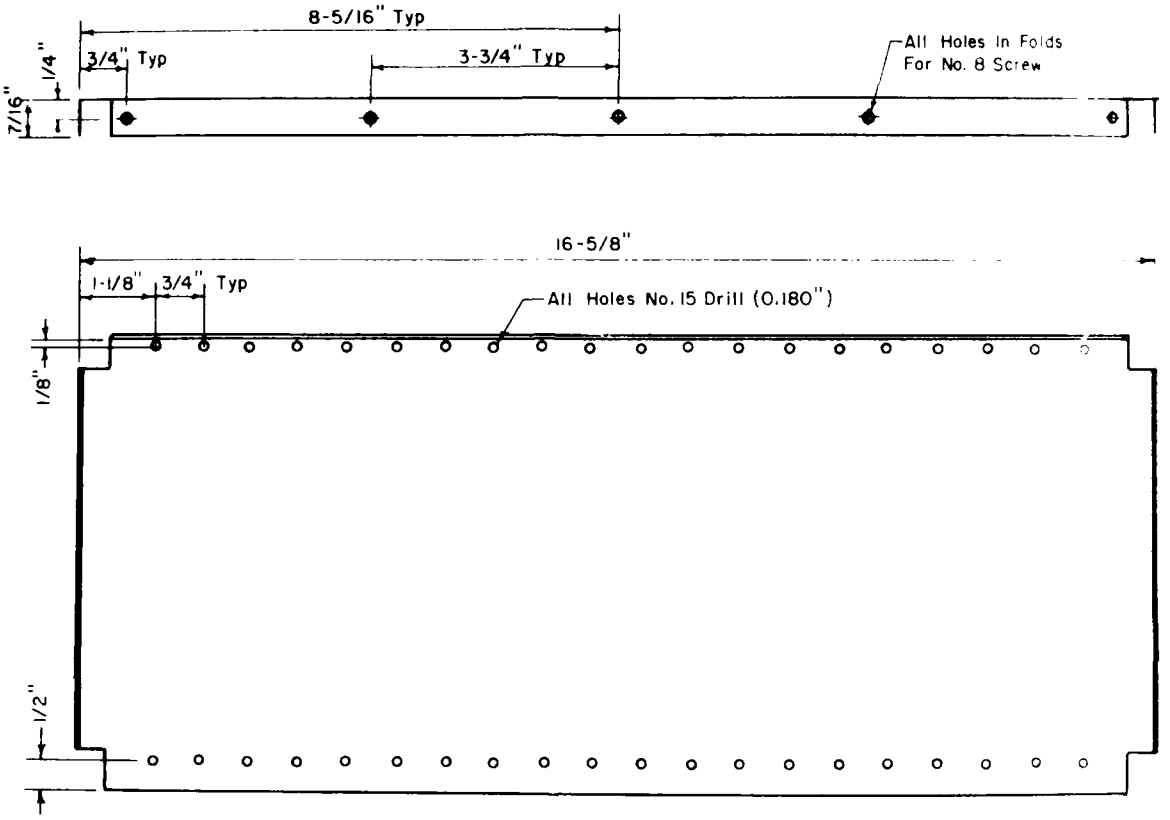

CARD GUIDE SIDE PANEL (2 Req'd)

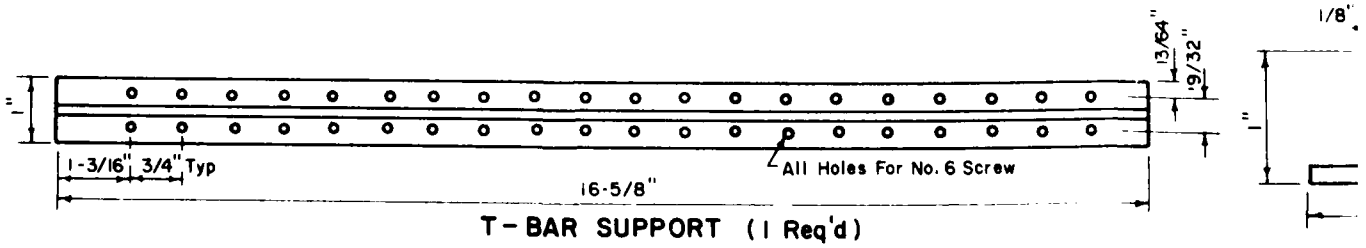

T-BAR SUPPORT (1 Req'd)

oles In Folds
lo. 8 Screw

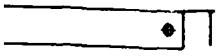

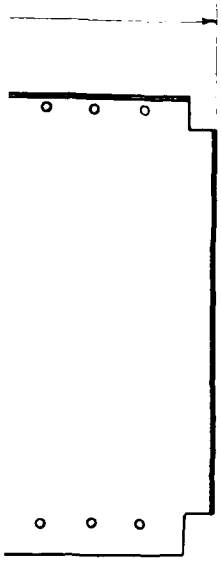

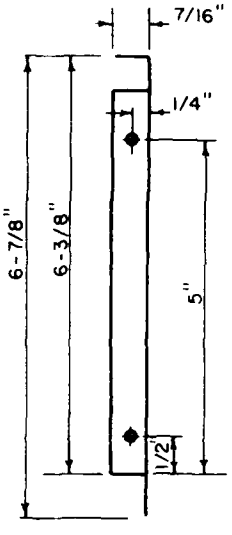

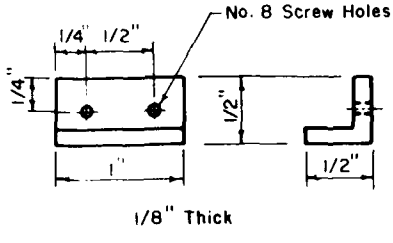

1/8" Thick

T – BAR SUPPORT BRACE (2 Req'd)

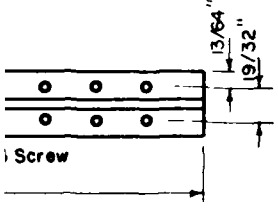

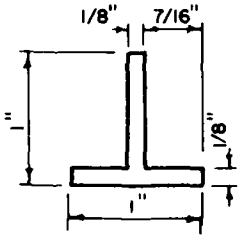

2

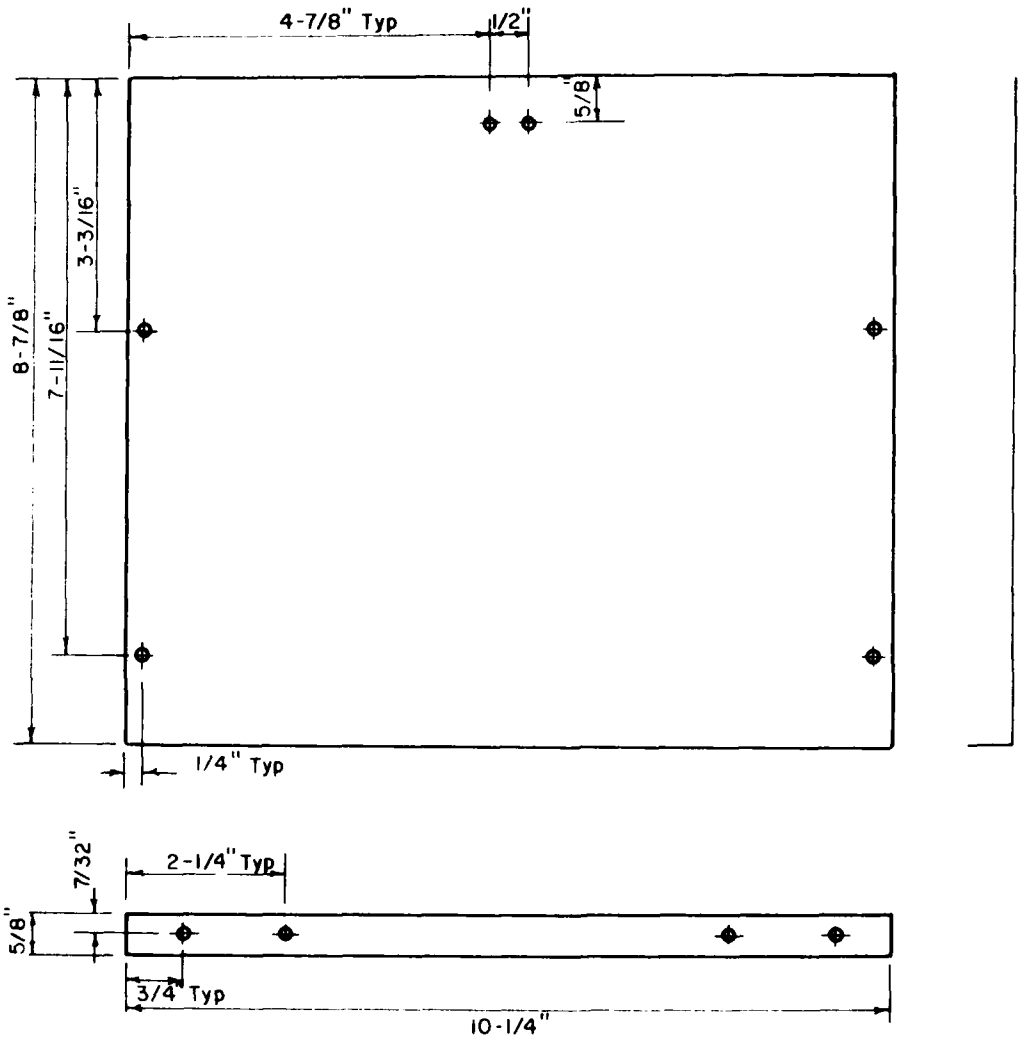

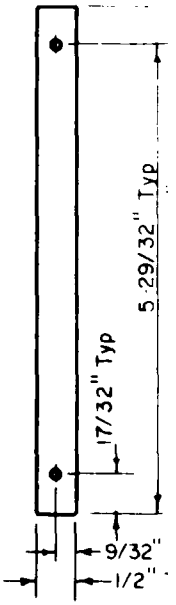

SIDE PLATE (2 Req'd)

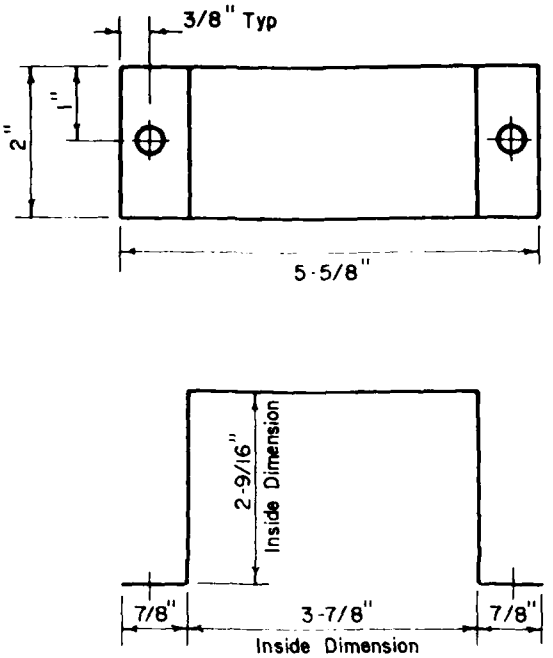

BATTERY CLAMP (1 Req'd)

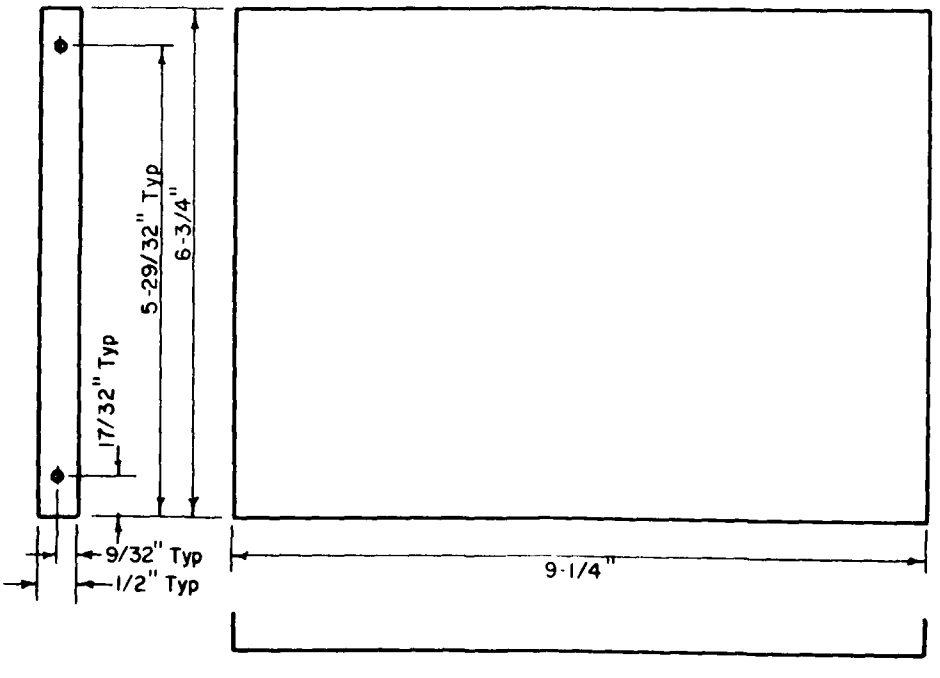

SHIELD (2 Req'd)

2

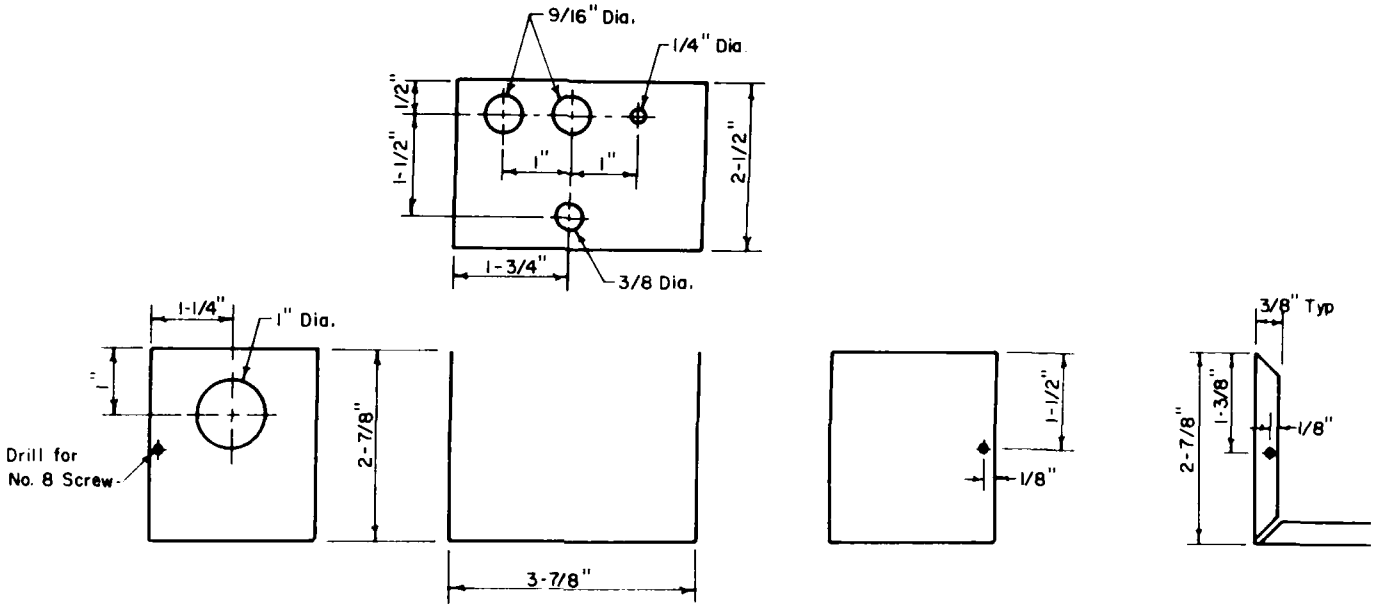

AC LINE POWER SHIELDING BOX (1 Req'd)

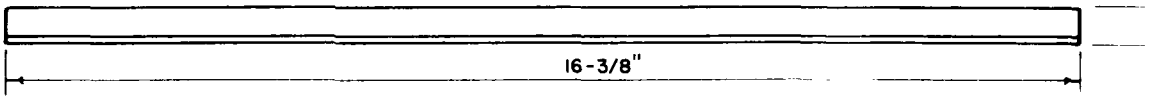

STIFFENER (2 Req'd)

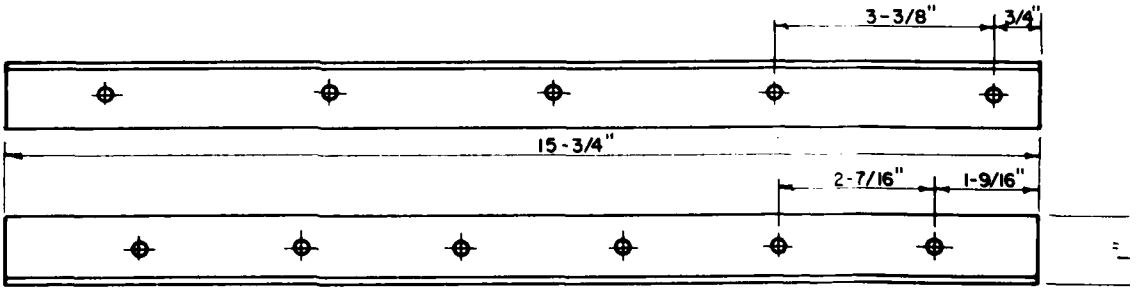

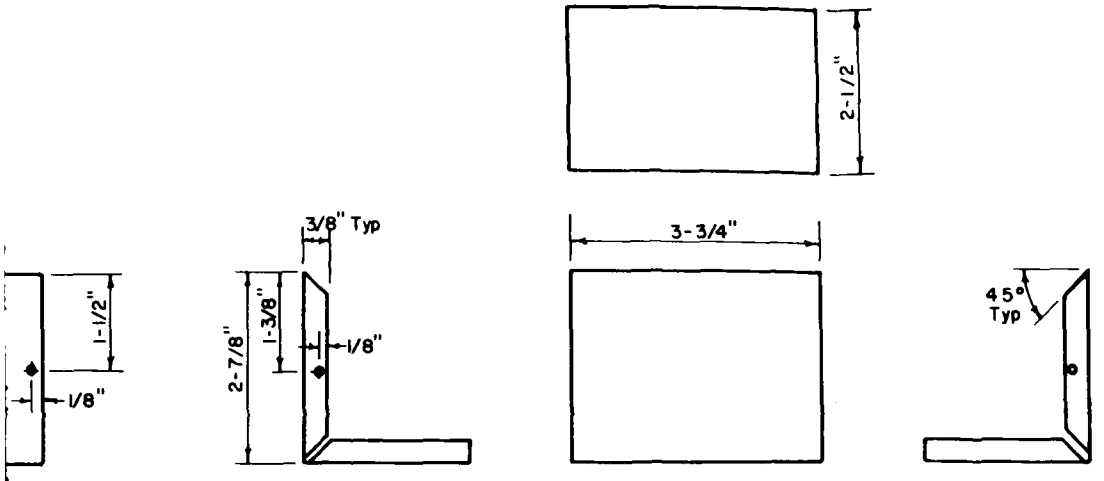

AC SHIELDING BOX COVER PLATE (1 Req'd)

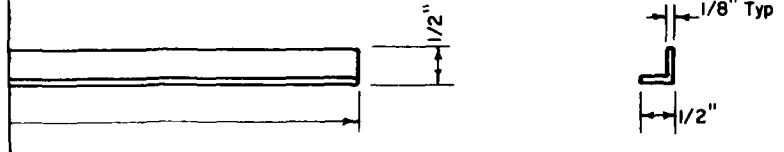

2 Req'd)

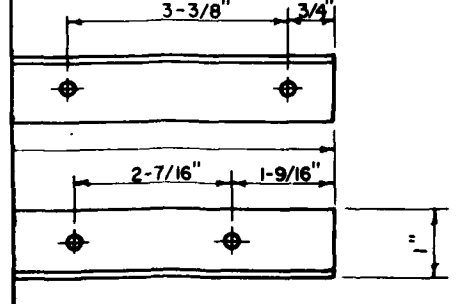

CONTROL PANEL MOUNTING BRACKET (1 Req'd)

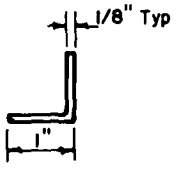

2

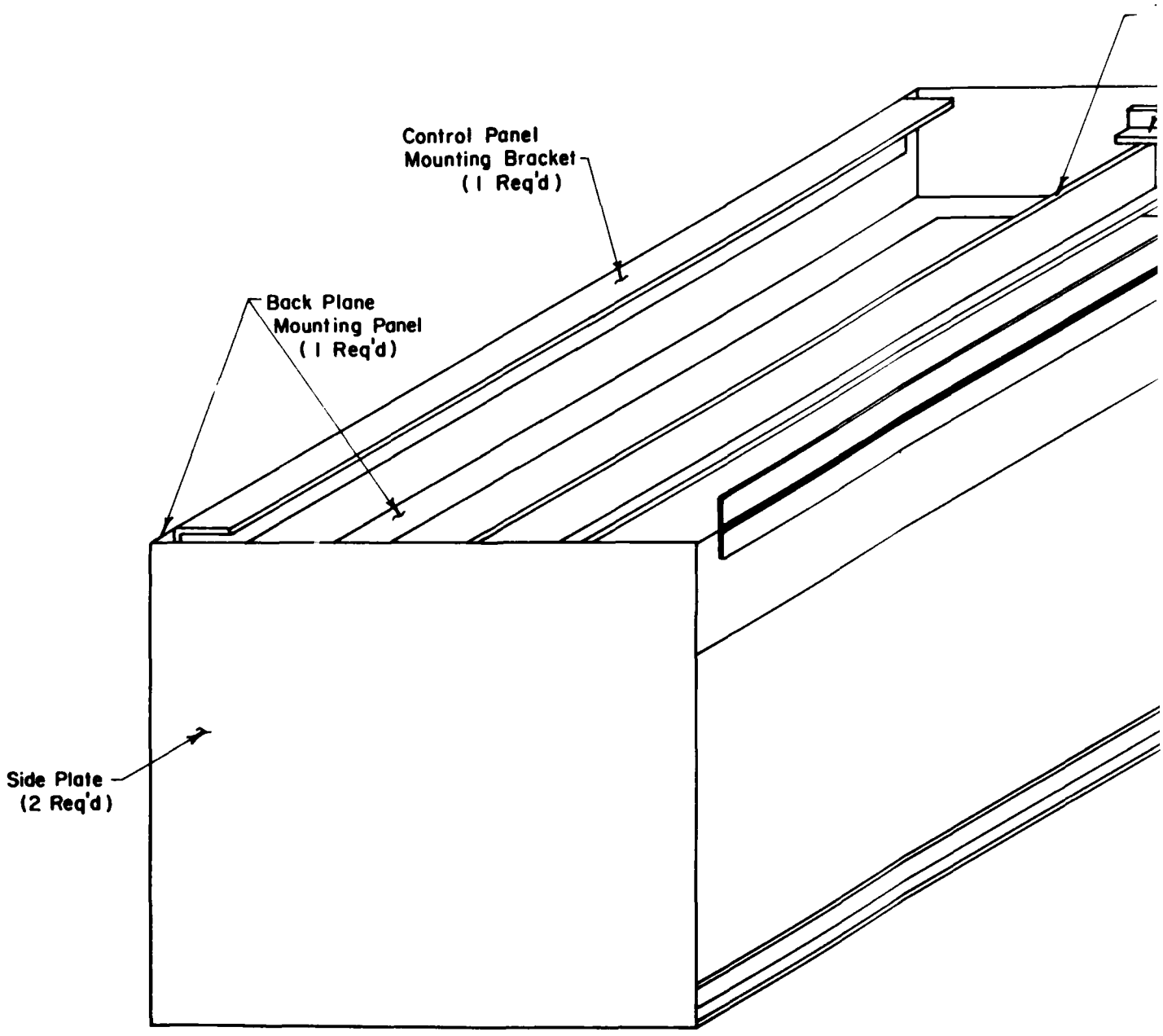
Control Panel
Mounting Bracket
(1 Req'd)
Back Plane
Mounting Panel
(1 Req'd)
Side Plate
(2 Req'd)

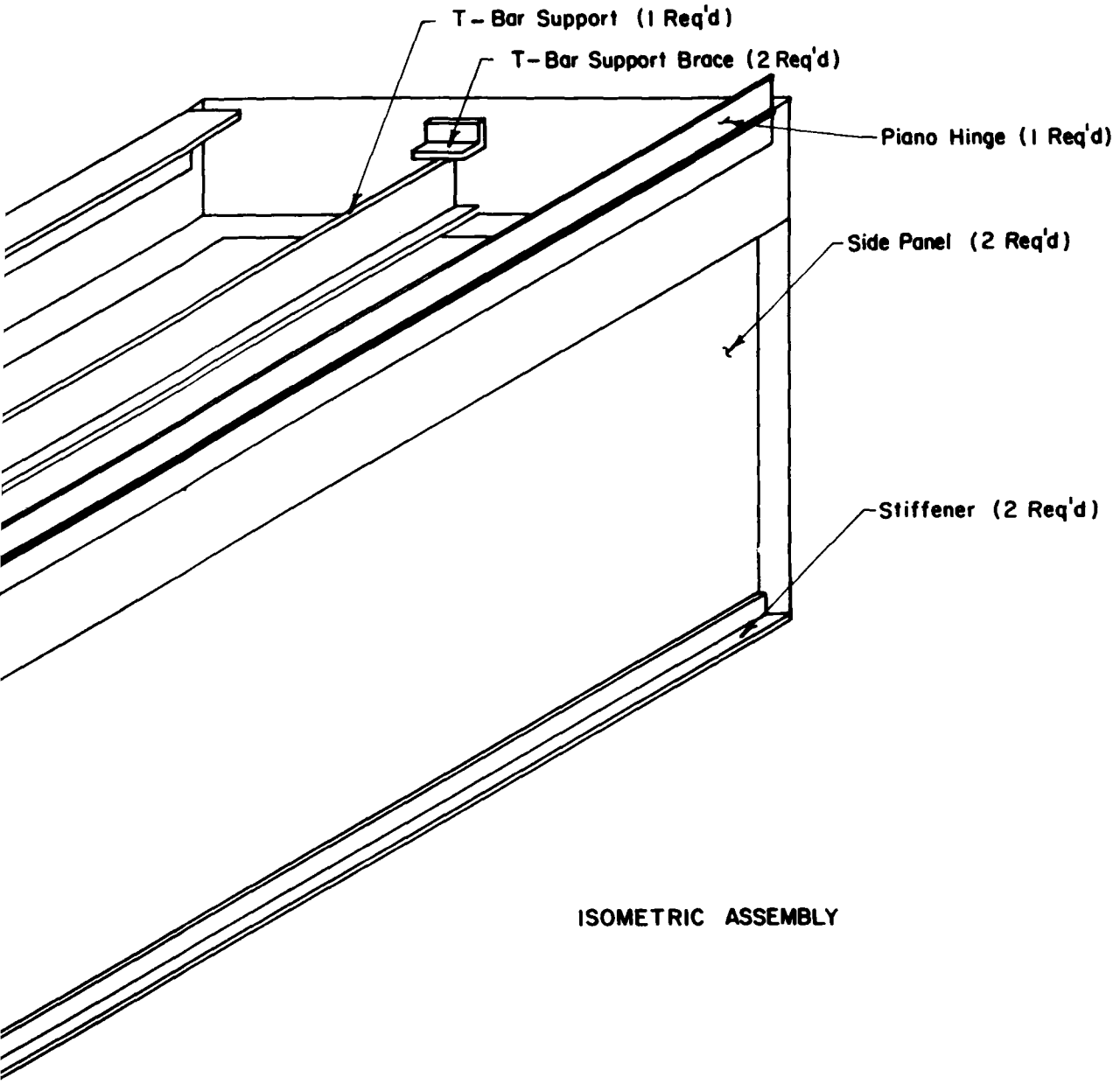

ISOMETRIC ASSEMBLY

2

APPENDIX B

INPUT/OUTPUT TEST PROGRAM

```
/
/
/
/ I/O DEFINITIONS
SEC=6600
MIN=6601
THSET=6602
SELCHN=6603
LODIS=6604
HIDIS=6605
GOTDAT=6606
SELMD=6607
/
OUTLO=6610
OUTMI=6611
OUTHI=6612
BEGIN=6613
SAMPLE=6614
OPRINT=6615
CLCF=6616
TOUT=6617
/
SWREG=6621
FUNLO=6622
FUNHI=6623
OUTREG=6624
PEAK=6625
STATIN=6626
TIN=6627
/
/GROUP 3 MICROINSTRUCTIONS
MQL=7421
MQA=7501
SWP=7521
CAM=7621
ACL=7701
/
/ADD A GROUP 1 MICROINSTRUCTION
BSW=7002
/
```

```
/
/DEFINITION TABLE
TTI=6100                /READ1  READ TTI BUFFER, RESET FLAG
TTO=6101                /WRITE1 LOAD TTO BUFFER, RESET FLAG
TTIS=6102               /SKIP1  SKIP ON TTI FLAG, DATA RECEIVED
TTOS=6103               /SKIP2  SKIP ON TTO FLAG, TRANSMIT BUFFER EMPTY
TTRA=6104               /RCRA   READ CONTROL REG A
TTWA=6105               /WCRA   WRITE CONTROL REG A
TTIRS=6106              /SFLG1  SET READER RUN RELAY
TTIRC=6107              /CFLG1  CLEAR READER RUN RELAY
/6110 NOT USED
TTOC=6111               /WRITE2 LOAD UART CONTROL BITS
TTISB=6112              /SKIP3  SKIP ON UART START BIT DETECTED
/6113 NOT USED
TTWV=6114               /WVR    WRITE VECTOR REGISTER
TTWB=6115               /WCRB   WRITE CONTROL REG B
/6116 NOT USED
/6117 NOT USED
/
/
/
/CONSTANTS
K1=CLA CLL IAC
K2=CLA CLL IAC RAL
K3=CLA CLL CML IAC RAL
K4=CLA CLL IAC RTL
K6=CLA CLL CML IAC RTL
K4000=CLA CLL CML RAR
K6000=CLA CLL CML IAC RTR
KM3=CLA CLL CMA RTL
KM2=CLA CLL CMA RAL
/
/
/MODE DEFINITIONS
VDIS=4000
MINITA=2000
CALREL=1000
STNBLD=400
STRTLD=200
PKCHN=100
FLDSEL=60
MODNUM=17
/
```

```
/
                /
                /
                /
                *600
                /
                /
                /HP DISPLAY TEST.  TAKES EACH BIT IN THE AC AND SENDS IT
                /TO THE LATCHES.  DISPLAY READS AS FOLLOWS
                /0001    0002    0004    0008
                /0010    0020    0040    0080
                /0000    0000    0000    0000
                /0100    0200    0400    0800
                /1000    2000    4000    8000
                /0000.   000.0   00.00   0.000
                /ETC.
0600  6002   HP,     IOF
0601  7301           KI                  /INITIALIZE DISPLAY
0602  3006           DCA 6
0603  3007           DCA 7
0604  3005           DCA 5               /INITIALIZE DELAY COUNTER
                /
0605  1006   HP1,    TAD 6               /THIS ACUALLY DOES THE DISPLAY
0606  6604           LODIS
0607  1007           TAD 7
0610  6605           HIDIS
                /
0611  6622           FUNLO               /TEST FOR EXIT
0612  7710           SPA CLA
0613  5777           JMP RESTRT          /LEQ SET MEANS EXIT
0614  2005           ISZ 5
0615  5214           JMP .-1             /110 MS DELAY
                /
0616  1006           TAD 6               /ADVANCE DISPLAY
0617  7104           CLL RAL
0620  3006           DCA 6
0621  1007           TAD 7
0622  7004           RAL
0623  3007           DCA 7
0624  7420           SNL
0625  5205           JMP HP1             /KEEP GOING
0626  5200           JMP HP              /LINK SET MEANS ALL DONE.  DO A RESET
                /
```

```
/
                    /THIS ROUTINE TESTS THE DATEL PRINTER
                    /THIS ROUTINE DOES NOT TEST THE FRONT PANEL SWITCH
                    /THE PRINTOUT SHOULD READ:
                    /             1
                    /             2
                    /             4
                    /             8
                    /            10
                    /            20
                    /            40
                    /            80
                    /           100
                    /           200
                    /           400
                    /           800
                    /          1000
                    /          2000
                    /          4000
                    /          8000
                    /       1  0000
                    /       2  0000
                    /       4  0000
                    /       8  0000
                    /      10  0000
                    /      20  0000
                    /      40  0000
                    /      80  0000
                    /           0.0
                    /          0.00
                    /         0.000
                    /       0 .0000
                    /     0.0  0000
                    /     .00  0000
                    /        -    0
                    /        !    0
                    /             0
                    /             0
                    /             0
                    /             0
                    /             0
                    /
                    /
0627  6002  DATEL,  IOF
0630  7330          K4000           /TURN ON PRINTER
0631  6612          OUTHI
0632  3005          DCA 5
0633  2005          ISZ 5
0634  5233          JMP .-1         /100 MS TIMER
0635  7330          K4000           /INIT SCAN AT END
0636  3004          DCA 4
0637  5256          JMP DAT2        /WAIT FOR PRINTER READY
                    /
0640  7301  DAT0,   K1
0641  3006          DCA 6           /INITIALIZE PRINTER BUFFER
0642  3005          DCA 5
0643  3004          DCA 4
                    /
0644  1006  DAT1,   TAD 6           /OUTPUT PRINTER BUFFER
0645  6610          OUTLO
0646  1005          TAD 5
```

```
0647  6611          OUTMI
0650  7330          K4000           /KEEP PRINTER ON
0651  7421          MQL
0652  1004          TAD 4
0653  7501          MQA             /INCLUSIVE OR
0654  6612          OUTHI
0655  6615          OPRINT          /PRINT IT
                /
0656  6622  DAT2,   FUNLO           /TEST FOR EXIT
0657  7710          SPA CLA
0660  5301          JMP DAT3        /FOUND IT.  LEQ IS SET
0661  6622          FUNLO           /TEST FLAG FOR DONE
0662  0376          AND (2
0663  7650          SNA CLA
0664  5256          JMP DAT2        /KEEP LOOKING
                /
0665  1006          TAD 6
0666  7104          CLL RAL         /ADVANCE DISPLAY
0667  3006          DCA 6
0670  1005          TAD 5
0671  7004          RAL
0672  3005          DCA 5
0673  1004          TAD 4
0674  7004          RAL
0675  3004          DCA 4
                /
0676  7420          SNL
0677  5244          JMP DAT1        /KEEP GOING
0700  5240          JMP DAT0        /DONE.  DO ALL OVER AGAIN
                /
0701  6612  DAT3,   OUTHI           /TURN OFF PRINTER
0702  5777          JMP RESTRT      /AND EXIT
                /
                /
                /
/               /
                /
0703  0000  DMPFLD, 0               /FIELD TO BE DUMPED
0704  0000  DMPBEG, 0               /BEGINNING OF BLOCK TO BE DUMPED
0705  0000  DMPEND, 0               /LAST LOCATION OF BLOCK TO BE DUMPED
0706  0000  DMPBG,  0
0707  0000  BUF,    0
0710  0000  DMPX,   0
0711  0000  OCT1,   0
0712  0000  OCT2,   0
                /   UART OUTPUT PROGRAM
                /
                /       OUTPUT LEADER(16 - '0377' AND 1 - '0000')
                /
0713  6002  START,  IOF
0714  1375          TAD (-20
0715  3307          DCA BUF
0716  1374  ULOOP1, TAD (377         /OUTPUT LEADER '0377'
0717  4773          JMS UOUT        /CALL UART OUTPUT SUBROUTINE
0720  2307          ISZ BUF
0721  5316          JMP ULOOP1
0722  4773          JMS UOUT        /OUTPUT '0000'
                /
                /
                /
```

```
                    /   MAIN OUTPUT ROUTINE
                    /
                    /
0723  3311  UART,    DCA OCT1          /ZERO CHECKSUM
0724  1303          TAD DMPFLD        /SEND FIELD DIGIT FIRST
0725  7421          MQL
0726  1304          TAD DMPBEG        /THEN SEND BEGINNING ADDRESS
0727  4772          JMS ULOOP2
0730  1305          TAD DMPEND        /SEND END ADDRESS
0731  7421          MQL
0732  1305          TAD DMPEND        /COMPUTE NUMBER OF WORDS TO SEND
0733  7040          CMA
0734  1304          TAD DMPBEG
0735  3307          DCA BUF
0736  1307          TAD BUF
0737  4772          JMS ULOOP2
                    /
0740  1304          TAD DMPBEG        /SET UP ADDRESS POINTER
0741  3306          DCA DMPBG
                    /
0742  1303  UDAT,    TAD DMPFLD        /GET DATA FROM DATA FIELD
0743  7106          CLL RTL
0744  7006          RTL
0745  6607          SELMD
0746  1706          TAD I DMPBG
0747  7421          MQL
0750  2306          ISZ DMPBG
0751  7000          NOP
0752  1706          TAD I DMPBG
0753  2306          ISZ DMPBG
0754  7000          NOP
0755  3312          DCA OCT2
0756  6607          SELMD
0757  1312          TAD OCT2
0760  4772          JMS ULOOP2        /SEND DATA
                    /
0761  2307          ISZ BUF           /ADVANCE COUNTER
0762  7410          SKP
0763  5366          JMP .+3
0764  2307          ISZ BUF
0765  5342          JMP UDAT
0766  1311          TAD OCT1          /DONE.  SEND CHECKSUM
0767  7041          CIA
0770  4773          JMS UOUT
0771  5777          JMP RESTRT
                    /
0772  1000          PAGE
0773  1023
0774  0377
0775  7760
0776  0002
0777  1115
                    /
```

```
1000  0000  ULOOP2, 0
1001  7521        SWP               /GET FIRST DATA INTO ACCUMULATOR
1002  3777        DCA DMPX
1003  1777        TAD DMPX          /SEND FIRST 8 BITS
1004  4223        JMS UOUT
1005  1777        TAD DMPX
1006  0376        AND (7400         /GET REMAINING
1007  3777        DCA DMPX
1010  7501        MQA               /PICK UP HIGH 8 BITS FROM SECOND WORD
1011  0376        AND (7400
1012  7112        CLL RTR
1013  7012        RTR
1014  1777        TAD DMPX          /COMBINE
1015  7112        CLL RTR           /AND ALIGN
1016  7012        RTR
1017  4223        JMS UOUT          /ALL HIGH BITS
1020  7501        MQA               /GET REMAINING BITS FROM SECOND WORD
1021  4223        JMS UOUT
1022  5600        JMP I ULOOP2
                  /
                  /
                  /
                  /
                  /
                  /
                  /          UOUT(UART OUTPUT SUBROUTINE)
                  /
1023  0000  UOUT,   0
1024  0375        AND (377          /MASK EXTRANEOUS
1025  3774        DCA OCT2          /SAVE DATA
1026  6622  LOOP3, FUNLO            /CHECK FOR SEL OR LEQ
1027  7710        SPA CLA           /SKIP ON SEL
1030  5315        JMP RESTRT        /RETURN TO SWITCH TESTING ROUTINE
1031  6626        STATIN            /GET UART STATUS
1032  0373        AND (100          /TEST FOR UART READY
1033  7650        SNA CLA           /SKIP IF UART IS READY
1034  5226        JMP LOOP3         /LOOP UNTIL UART IS READY
1035  1774        TAD OCT2          /GET DATA
1036  6617        TOUT              /OUTPUT DATA
1037  1772        TAD OCT1          /UPDATE CHECKSUM
1040  1774        TAD OCT2
1041  3772        DCA OCT1
1042  5623        JMP I UOUT
                  /
                  /
                  /
                  /
                  /
                  /
                  /
1043  0000  OCTOUT, 0
1044  4253        JMS OCTA          /OCTAL DISPLAY ROUTINE
1045  6604        LODIS
1046  1772        TAD OCT1
1047  7002        BSW               /GET HIGH ORDER
1050  4253        JMS OCTA
1051  6605        HIDIS
1052  5643        JMP I OCTOUT
                  /
1053  0000  OCTA,   0
1054  3772        DCA OCT1
1055  1772        TAD OCT1
1056  0371        AND (7
1057  3774        DCA OCT2
1060  1772        TAD OCT1
1061  7004        RAL
1062  0370        AND (160
1063  1774        TAD OCT2
1064  5653        JMP I OCTA
                  /
                  /
                  /
```

```
1065  0000  UIN,     0
1066  6622            FUNLO           /CHECK FOR SEL OR LEQ
1067  7710            SPA CLA         /SKIP ON SEL
1070  5315            JMP RESTRT      /RETURN TO SWITCH TESTING ROUTINE
1071  6626            STATIN          /GET UART STATUS
1072  0367            AND (200        /CHECK INPUT READY
1073  7650            SNA CLA         /SKIP IF UART IS READY
1074  5266            JMP UIN+1       /LOOP UNTIL UART IS READY
1075  6627            TIN             /INPUT FROM UART
1076  0375            AND (377        /MASK OUT UPPER 4 BITS
1077  5665            JMP I UIN
                /
                /
                /
                /
1100  6621  UARTST,  SWREG           /START WITH 377 IN SWITCH REGISTER
1101  4223            JMS UOUT
1102  4265            JMS UIN
1103  4243            JMS OCTOUT
1104  5300            JMP UARTST
                /
                /
                /
                /
1105  6002  FUNSW,   IOF
1106  6623            FUNHI           /TEST FUNCTION SWITCH
1107  0366            AND (77
1110  4243            JMS OCTOUT
1111  6622            FUNLO           /CHECK FOR ESCAPE
1112  7710            SPA CLA
1113  5315            JMP RESTRT
1114  5305            JMP FUNSW
                /
                /
                /
                //
                /
1115  6001  RESTRT,  ION              /RETURN TO BOX
1116  5177            JMP 177         /AT SWITCH TESTING ROUTINE
                /
1166  0077            PAGE
1167  0200
1170  0160
1171  0007
1172  0711
1173  0100
1174  0712
1175  0377
1176  7400
1177  0710
                /
                /


0600  0772  0771
1000  1117  1165
```

CERL DISTRIBUTION

HQDA (SGRD-EDE)

Chief of Engineers
ATTN: DAEN-MPE-I/F. P. Beck
ATTN: DAEN-ASI-L (2)
ATTN: DAEN-MPR
ATTN: DAEN-RDL

US Army Medical Bioengineering
R&D Laboratory
Envr Protection Res Div
ATTN: LTC L. H. Reuter
Ft. Detrick
Frederick, MD 21701

US Army Aeromedical Research Lab
ATTN: R. T. Camp, Jr.
ATTN: CPT J. Patterson
Box 577
Ft. Rucker, AL 36360

USA-WES
ATTN: Library
ATTN: J. Stoll/WESSE

Director
6570 AMRL/BBE
ATTN: Dr. H. Von Gierke
ATTN: J. Speakman
ATTN: LTC D. Johnson, BBA
Wright-Patterson AFB, OH 45433

Navy Undersea Center, Code 401
ATTN: B. Gales
ATTN: B. Young
San Diego, CA 92132

Washington, DC
ATTN: Building Research Advisory Board
ATTN: Transportation Research Board
ATTN: Library of Congress (2)
ATTN: Dept of Transportation Library

EPA Noise Office
ATTN: A. Hicks, Rm 2113
ATTN: K. Williams, Rm 109
ATTN: T. O'Hare, Rm 907G

EPA Region III Noise Program
ATTN: P. Anderson

Illinois EPA
ATTN: DNPC/G. Zak
ATTN: B. Hellweg

EPA
ATTN: AW-471/C. Caccavari
ATTN: AW-471/H. Nozick
ATTN: AW-371/A. Konheim
ATTN: R. Marrazzo
ATTN: W. Sperry
ATTN: J. Goldstein
ATTN: D. Gray
ATTN: D. Mudarri
ATTN: R. Hayman
ATTN: R. A. Simmons

Aberdeen Proving Ground, MD 21005
Human Engineering Laboratory
ATTN: J. E. Weisz/AMZHE
ATTN: G. Garinther
Ballistics Research Laboratory
ATTN: B. Taylor
Army Environmental Hygiene Agency
ATTN: Chief, Bio-Acoustics Div

Defense Documentation Center (12)

National Bureau of Standards
ATTN: D. R. Flynn

NASA
ATTN: H. Hubbard

Engineering Societies Library
New York, NY 10017

True-integrating environmental noise monitor and sound exposure level meter / by P. D. Schomer...et al. -- Champaign, IL : Construction Engineering Research Laboratory ; Springfield, VA : available from NTIS, 1978 - 1980
4 v. ; 27 cm. (Technical report ; N-41)

1. Noise-measurement. I. Schomer, Paul D. II. Averbuch, Aaron J. III. Weisberg, M. W. IV. Brown, Ronald. V. Little, Lincoln M. VI. Series: U. S. Army Construction Engineering Research Laboratory. Technical report; N-41.

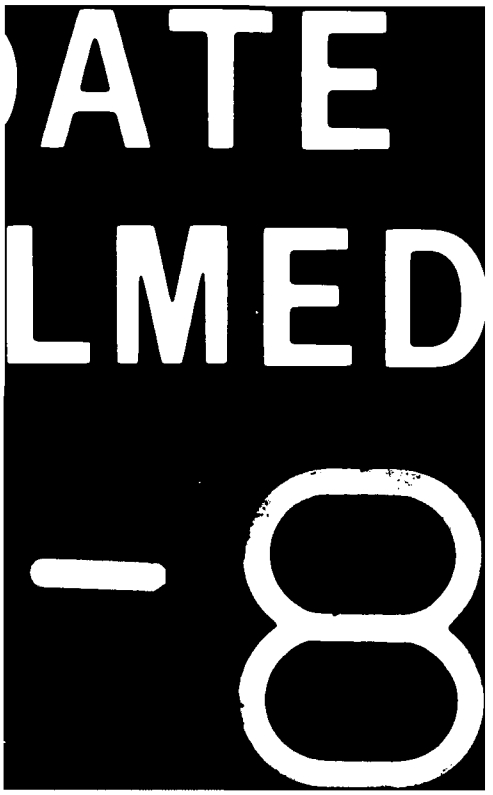
ATE
LMED
-8