1772

1449

AD-A039 901-L

TARADCOM LABORATORY

TECHNICAL REPORT

NO. 12226

U.S. ARMY TARADCOM

FLUIDIC TECHNOLOGY INVESTIGATION SUSPENSION DAMPING SIMULATIONS

JANUARY 1977

by JAMES W. GRANT
STEVEN A. YOLLICK
MEL M. STEELE

TECHNICAL LIBRARY REFERENCE COPY

Approved for public release;
distribution unlimited.

2003 1218 121

AN40714

U.S. ARMY TANK-AUTOMOTIVE
RESEARCH AND DEVELOPMENT COMMAND
Warren, Michigan 48090

The findings in this report are not to be construed as an official Department of the Army position, unless so designated by other authorized documents.

The citation of commercial products in this report does not constitute an official indorsement or approval of such products.

FLUIDIC TECHNOLOGY INVESTIGATION - SUSPENSION DAMPING SIMULATIONS

BY

JAMES W. GRANT

STEVEN A. YOLLICK

MEL M. STEELE

AMCMS 691000.11.H7300

JANUARY 1977

TABLE OF CONTENTS

	PAGE
ABSTRACT	iv
1. INTRODUCTION	1
2. OBJECTIVES	3
3. RESULTS	4
4. RECOMMENDATIONS	5
5. VEHICLE DYNAMICS MODEL	6
6. SUSPENSION DAMPING MODELS	13
CONVENTIONAL DAMPING	13
CONSTANT DAMPING	25
OPTIMAL DAMPING	25
ADAPTIVE FLUIDIC DAMPING	27
MOD I	34
MOD II	39
MOD IIB	39
MOD III	39
7. TERRAIN DEFINITION	42
8. ABSORBED POWER CRITERION	45
9. DAMPER ENERGY	46
BIBLIOGRAPHY	48
APPENDICES	
A. ANALOG COMPUTER ROAD MAPS	49
VEHICLE DYNAMICS	
ABSORBED POWER	
DAMPER ENERGY	

TABLE OF CONTENTS (CON'T)

	PAGE
B. ANALOG COMPUTER ROAD MAPS	60
CONVENTIONAL AND OPTIMAL DAMPING	
CONSTANT DAMPING	
ADAPTIVE FLUIDIC DAMPER	
MOD I	
MOD II	
MOD IIB	
MOD III	
C. FORTRAN DIGITAL/HYBRID PROGRAM	72
D. GRAPHS	84
E. DIGITAL OUTPUT DATA FOR ALL DAMPERS WITH TWO-INCH RMS TERRAIN INPUT	95
DISTRIBUTION LIST	161
1473 FORM	167

ABSTRACT

The purpose of this investigation was to evaluate adaptive suspension damping devices, specifically those which employ fluidic controls, by means of hybrid computer simulations.

The M151A2, 1/2 ton, 4 X 4, utility vehicle was first simulated to provide baseline data for comparing the adaptive dampers.

This investigation resulted in the definition of parameters which were given to the contractor who is building a "breadboard" of the Adaptive Fluidic Vibration Damper MOD IIB.

1. INTRODUCTION

In September 1974, the Simulation Testing Sub-Function, now a function of the Science and Technology Division, U.S. Army Tank-Automotive Research and Development Command, was requested by the Suspension Sub-Function to perform a computer simulation to determine optimum damping characteristics for a wheeled vehicle. The results of the simulation would then serve as inputs to a fluidic damper R&D program funded by Harry Diamond Laboratories.

The vehicle initially chosen for this study was the 1¼ ton, 4 X 4, Tactical Support Mobility, Cargo Truck. The system damping was optimized using two indices of performance: driver's absorbed power and absorbed damper energy. The absorbed power index was chosen to be a measure of system performance related to driver comfort while absorbed damper energy was chosen as the indicator of expected damper life.

It was apparent from initial computer runs that the standard vehicle chosen did not have enough mobility over the higher rms (rougher) terrains and did not have enough jounce travel at the rear axle in the loaded condition to warrant further investigation. Hence, rear wheel jounce travel was arbitrarily increased by two inches on the computer model to provide a larger damper operating stroke. Preliminary runs demonstrated that ride performance and damper energy with this modification can be adjusted by the shape of the damper curve.

As stated previously, the results of this investigation are to be used for input to a fluidic damper R&D program, thus it is imperative that the investigation be applicable to a real vehicle for which a fluidic

damper can be constructed. For this reason, the computer model was reconfigured to represent the vehicle dynamics of the M151A2, ¼ ton, 4 X 4 utility vehicle, which has sufficient mobility and wheel travel to fully investigate unconventional damping devices.

This report will discuss the types of damping control investigated, an optimum damping control curve and five types of fluidic controlled dampers.

2. OBJECTIVES

The objectives of the program concern adaptive fluidically-controlled suspension vibration dampers (shock absorbers), whose parameters may be described by the following:

1. Must be physically realizable.
2. Must decrease required rate of energy dissipation.
3. Must not degrade ride performance.

3. RESULTS/CONCLUSIONS

The computer simulation and evaluation of the eight suspension concepts presented in this report resulted in the realization of the three major objectives originally set forth: reduction in rate of energy absorbed by the damper, no degradation of ride performance, and a physically realizable damping device.

In excess of one thousand runs were made using the described damping devices over terrains varying from 1.5 inch rms to 3.5 inch rms.

The damping device, which will be manufactured under contract, will have the characteristics described by the MOD IIB concept. The breadboard of this concept will be laboratory-tested at TARADCOM to verify its performance. Prototypes will then be manufactured for further laboratory testing and for vehicle application and field testing.

4. RECOMMENDATIONS

The results of this investigation indicate that more effective suspension damping can be achieved by adaptive dampers. The subject of the current investigations is their fluidic control. In this investigation, the damping force is a function of (1) damper closing velocity for conventional, constant and optimal damping, (2) vertical wheel acceleration and damper closing velocity for the adaptive fluidic damper, (3) vertical wheel acceleration and velocity and damper closing velocity for Mod I, and (4) vertical wheel velocity and damper closing velocity for Mods II, IIB, and III.

Vehicle ride is a function of the motion of the sprung mass; therefore, if this motion is minimized,ride quality is maximized. It is recommended that an analytical (computer simulation) investigation be undertaken where suspension damping force is made to be a function of sprung mass acceleration and/or velocity and damper closing velocity. A parallel investigation should be undertaken to determine if this device can be built.

5. VEHICLE DYNAMICS MODEL

This investigation assumes a two-wheeled vehicle which can be modeled as a lumped-mass parameter system. A block diagram of the vehicle is shown in Figure 5-1.

Where:

The time dependent variables are defined by:

Y_0 = Sprung Mass Vertical Displacement.

Y_1 = Front Unsprung Mass Vertical Displacement.

Y_2 = Rear Unsprung Mass Vertical Displacement.

Y_3 = Vertical Sprung Mass Displacement Above Front Axle.

Y_4 = Vertical Sprung Mass Displacement Above Rear Axle.

θ = Sprung Mass Pitch Displacement.

Y_{tf} = Front Terrain Vertical Trajectory.

Y_{tr} = Rear Terrain Vertical Trajectory.

The constants for the M151A2 are defined by:

M_1 = Front Unsprung Mass = 3.576 Slugs.

M_2 = Rear Unsprung Mass = 2.799 Slugs.

K_f = Front Tire Spring Rate = 8,000 lb/ft.

K_r = Rear Tire Spring Rate = 11,000 lb/ft.

D_f = Front Tire Damping Coefficient = 7.9 lb-sec/ft.

D_r = Rear Tire Damping Coefficient = 8.3 lb-sec/ft.

Empty M151A2:

M_0 = Sprung Mass = 29.68 Slugs.

I_0 = Pitch Inertia = 216.47 Slug-Ft^2.

a = Center of Gravity from Front Axle = 2.27 Ft.

b = Center of Gravity from Rear Axle = 4.81 Ft.

c = Driver's Seat Aft of Center of Gravity = 0.881 Ft.

Loaded M151A2:

M_0 = Sprung Mass = 42.135 Slugs.

I_0 = Pitch Inertia = 359.5 Slug-Ft^2.

a = Center of Gravity from Front Axle = 3.692 Ft.

b = Center of Gravity from Rear Axle = 3.392 Ft.

c = Driver's Seat Forward of Center of Gravity = 0.54 Ft.

Non-linearities included in the model are the suspension dampers, which will be defined in Section 6, the suspension springs which include bump stops, shown in Figures 5-2 and 5-3 and the tire-terrain interface which allows the tires to separate from the terrain.

The two-wheeled model is further simplified by assuming small pitch angles ($S_{in}\theta = \theta$ and $C_{os}\theta = 1$), tire damping is proportional to wheel velocities $\dot{Y}_1$ and $\dot{Y}_2$ and zero friction damping in the suspension.

The equationsof motion which describe the vehicle system in Figure 5-1 including the simplifying assumptions are:

Sprung Mass Bounce Motion

$$M_o\ddot{Y}_o - D_1(\dot{Y}_1 - \dot{Y}_o + a\dot{\theta}) - D_2(\dot{Y}_2 - \dot{Y}_o - b\dot{\theta}) \tag{5-1}$$
$$- K_1(Y_1 - Y_o + a\theta) - K_2(Y_2 - Y_o - b\theta) = g$$

Sprung Mass Pitch Motion

$$I_o\ddot{\theta} + D_1a(\dot{Y}_1 - \dot{Y}_o + a\dot{\theta}) - D_2b(\dot{Y}_2 - \dot{Y}_o - b\dot{\theta}) \tag{5-2}$$
$$+ K_1a(Y_1 - Y_o + a\theta) - K_2b(Y_2 - Y_o - b\theta) = 0$$

Front Unsprung Mass Vertical Motion

$$M_1\ddot{Y}_1 + D_1(\dot{Y}_1 - \dot{Y}_o + a\dot{\theta}) + D_f(\dot{Y}_1) \tag{5-3}$$
$$+ K_1(Y_1 - Y_o + a\theta) - K_f(Y_{tf} - Y_1) = g$$

Rear Unsprung Mass Vertical Motion

$$M_2\ddot{Y}_2 + D_2(\dot{Y}_2 - \dot{Y}_o - b\dot{\theta}) + D_r(\dot{Y}_2) \tag{5-4}$$
$$+ K_2(Y_2 - Y_o - b\theta) - K_r(Y_{tr} - Y_2) = g$$

Tire-Terrain Interface Constraint Equations

$$K_f(Y_{tf} - Y_1) \geq 0 \tag{5-5}$$

$$K_r(Y_{tr} - Y_2) \geq 0 \tag{5-6}$$

The analog computer road maps for Equations (5-1) through (5-6) are presented in Appendix A, and the Digital Program to interface the hybrid system is presented in Appendix C.

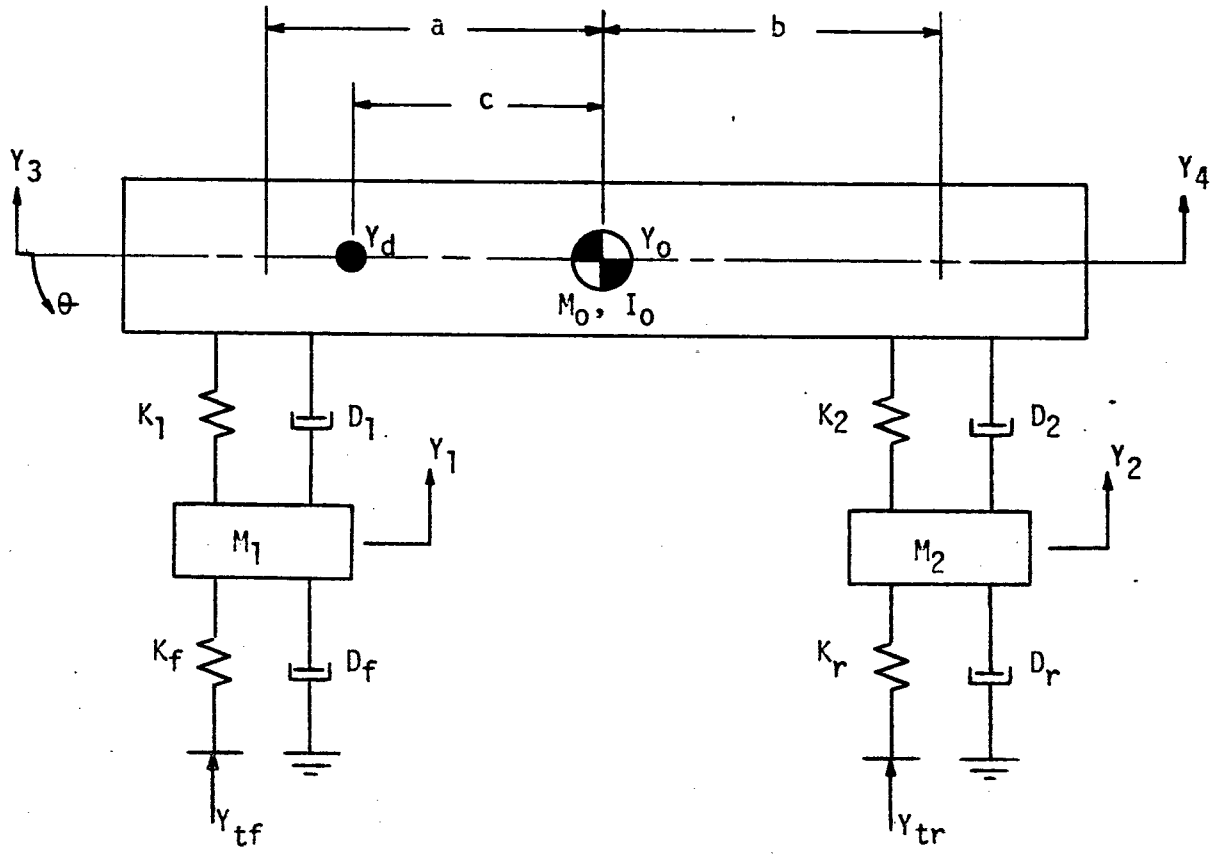

VEHICLE MODEL

FIGURE 5-1

SPRUNG MASS BOUNCE MOTION

$$M_o\ddot{Y}_o - D_1(\dot{Y}_1 - \dot{Y}_o + a\dot{\theta}) - D_2(\dot{Y}_2 - \dot{Y}_o - b\dot{\theta}) \tag{5-1}$$

$$-K_1(Y_1 - Y_o + a\theta) - K_2(Y_2 - Y_o - b\theta) = g$$

SPRUNG MASS PITCH MOTION

$$I_o\ddot{\theta} + D_1a(\dot{Y}_1 - \dot{Y}_o + a\dot{\theta}) - D_2b(\dot{Y}_2 - \dot{Y}_o - b\dot{\theta}) \tag{5-2}$$

$$+K_1a(Y_1 - Y_o + a\theta) - K_2b(Y_2 - Y_o - b\theta) = 0$$

FRONT UNSPRUNG MASS VERTICAL MOTION

$$M_1\ddot{Y}_1 + D_1(\dot{Y}_1 - \dot{Y}_o + a\theta) + D_f(\dot{Y}_1) \tag{5-3}$$

$$+K_1(Y_1 - Y_o + a\theta) - K_f(Y_{tf} - Y_1) = g$$

REAR UNSPRUNG MASS VERTICAL MOTION

$$M_2\ddot{Y}_2 + D_2(\dot{Y}_2 - \dot{Y}_o - b\dot{\theta}) + D_r(\dot{Y}_2) \tag{5-4}$$

$$+K_2(Y_2 - Y_o - b\theta) - K_r(Y_{tr} - Y_2) = g$$

TIRE-TERRAIN INTERFACE CONSTRAINT EQUATIONS

$$K_f(Y_{tf} - Y_1) \geq 0 \tag{5-5}$$

$$K_r(Y_{tr} - Y_2) \geq 0 \tag{5-6}$$

The analog computer road maps for Equations (5-1) through (5-6) are presented in Appendix A.

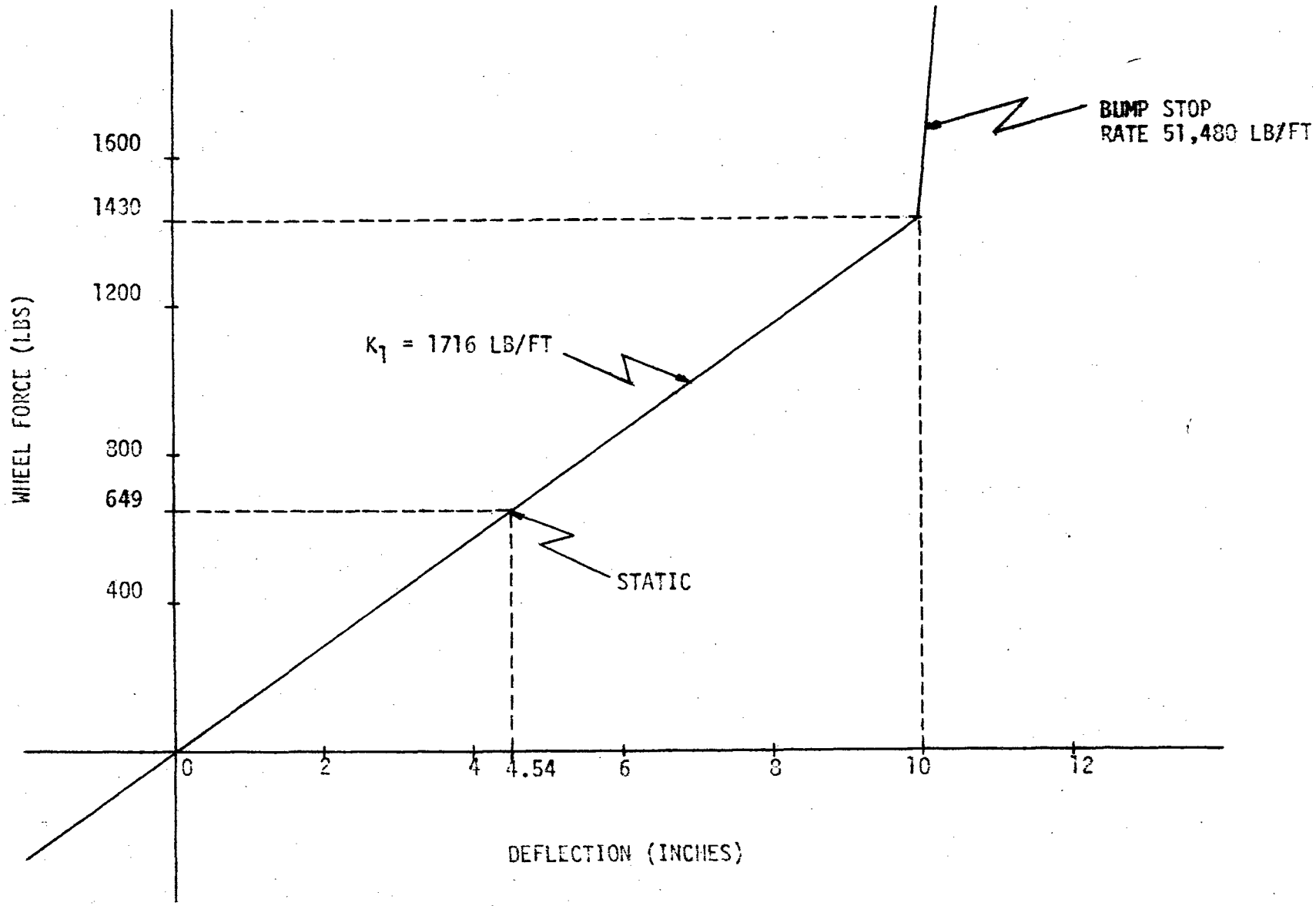

M151A2 FRONT AXLE SPRING DEFLECTION CURVE

FIGURE 5-2

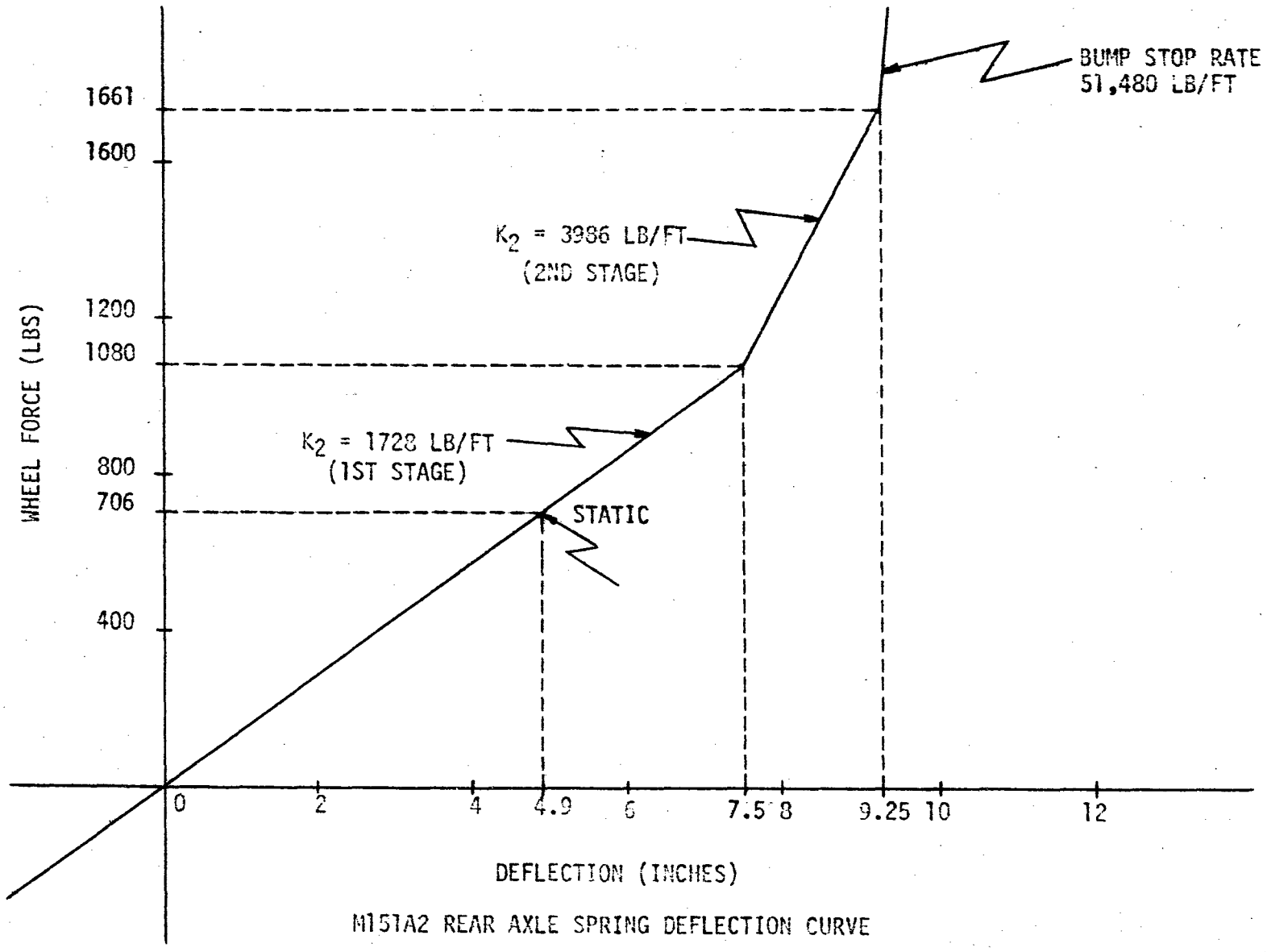

M151A2 REAR AXLE SPRING DEFLECTION CURVE

FIGURE 5-3

6. SUSPENSION DAMPING MODELS

The suspension device which attenuates undesirable sprung mass oscillations is the vibration damper (shock absorber). Four different types of damping devices were analytically modeled, interfaced with the vehicle model described in Section 5 and evaluated with respect to ride performance and absorbed damping energy.

The analysis of each type of damping device was carried out using a hybrid computer. All differential equations of motion were solved in real time using the analog portion. The terrain trajectories were input from the digital portion and data from the simulation were input to the digital portion for analysis and final printout.

This section will present each of the eight damper models, while Sections 7, 8, and 9 will present the inputs to and outputs from the analyses.

CONVENTIONAL DAMPING

Conventional damping will be defined in this report as the suspension damping provided by the standard production shock absorber. The data accumulated from the analysis of the standard shock absorber equipped M151A2 is baseline data to which the four succeeding damping devices are to be compared.

Mechanically, the conventional shock absorber consists of a piston, cylinder, rod, and reservoir. Within the piston are spring-loaded jounce and rebound valves to control damping force. Additionally, there is at the jounce end of the cylinder a spring-loaded blow-off valve to limit maximum

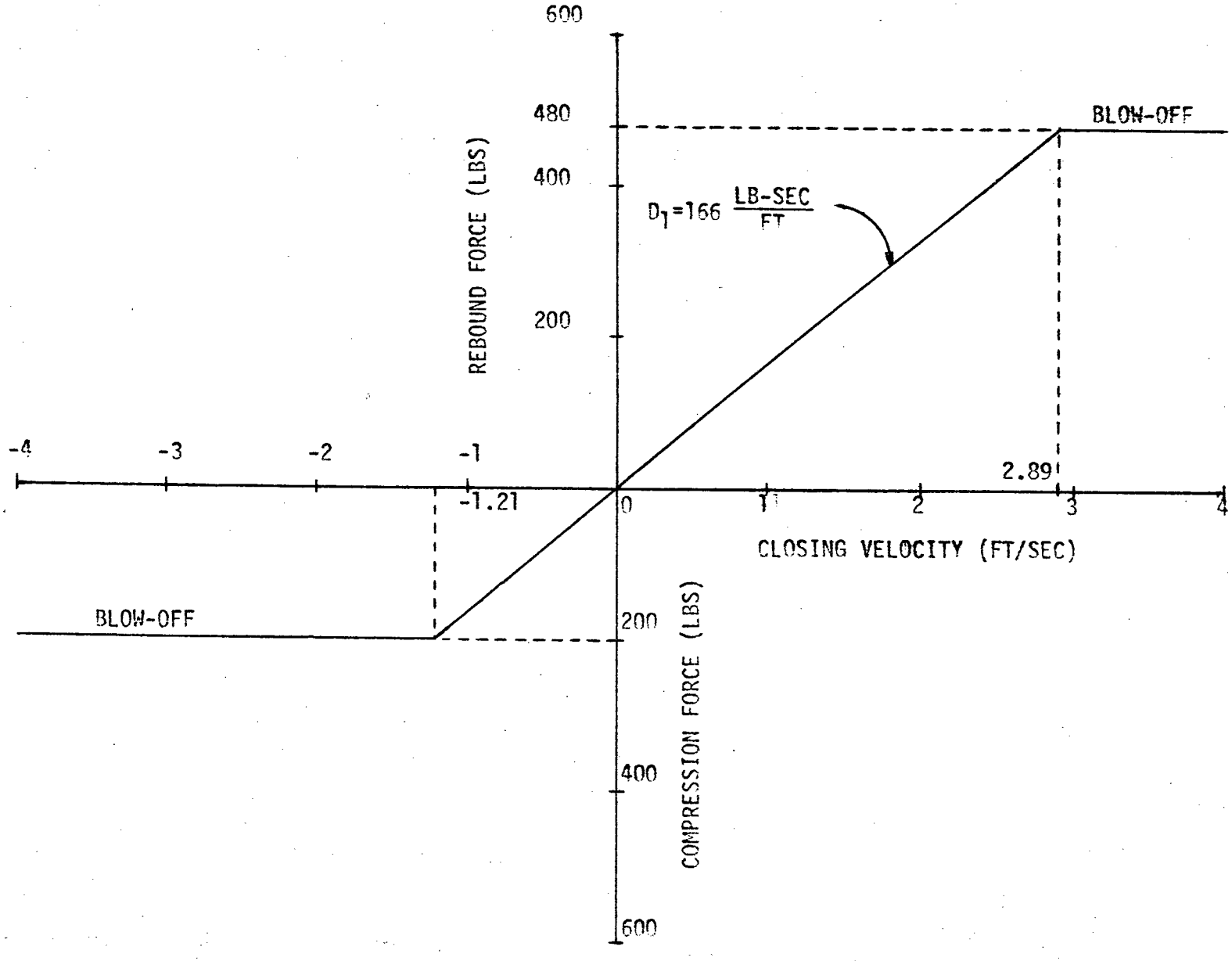

M151A2 FRONT AXLE DAMPING CURVE

FIGURE 6-1

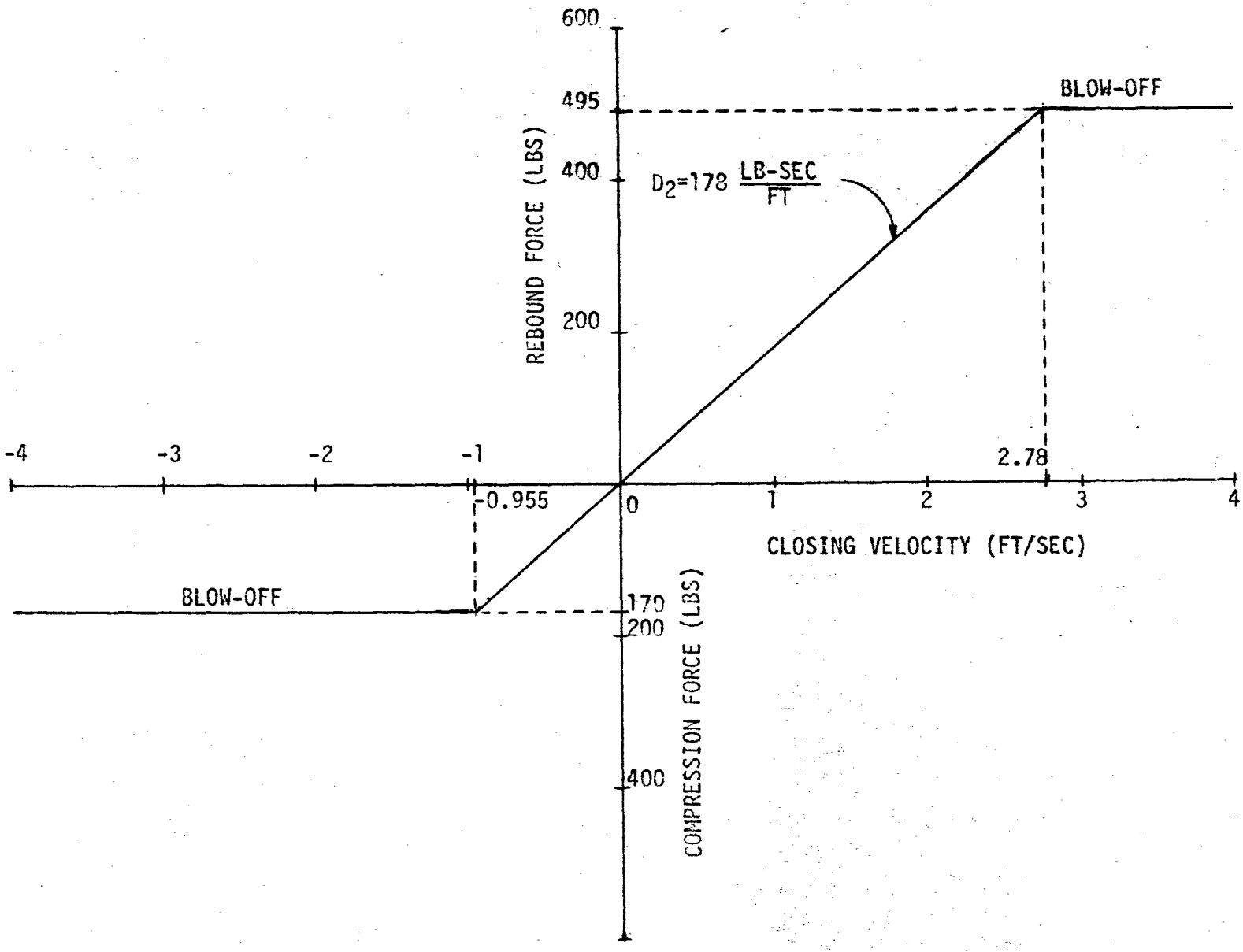

M151A2 REAR AXLE DAMPING CURVE

FIGURE 5-2

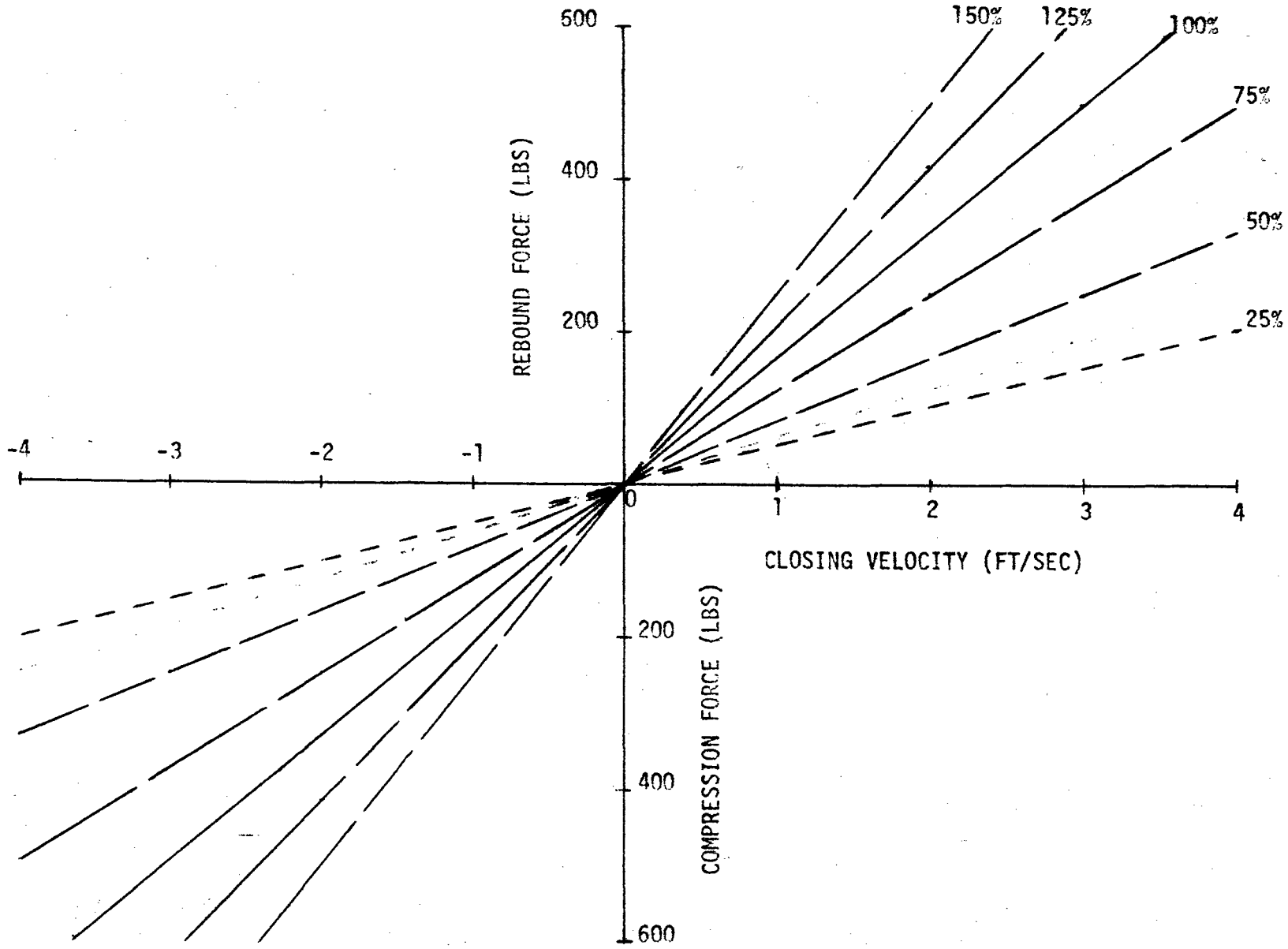

M151A2 FRONT AXLE CONSTANT DAMPING CURVES

FIGURE 6-3

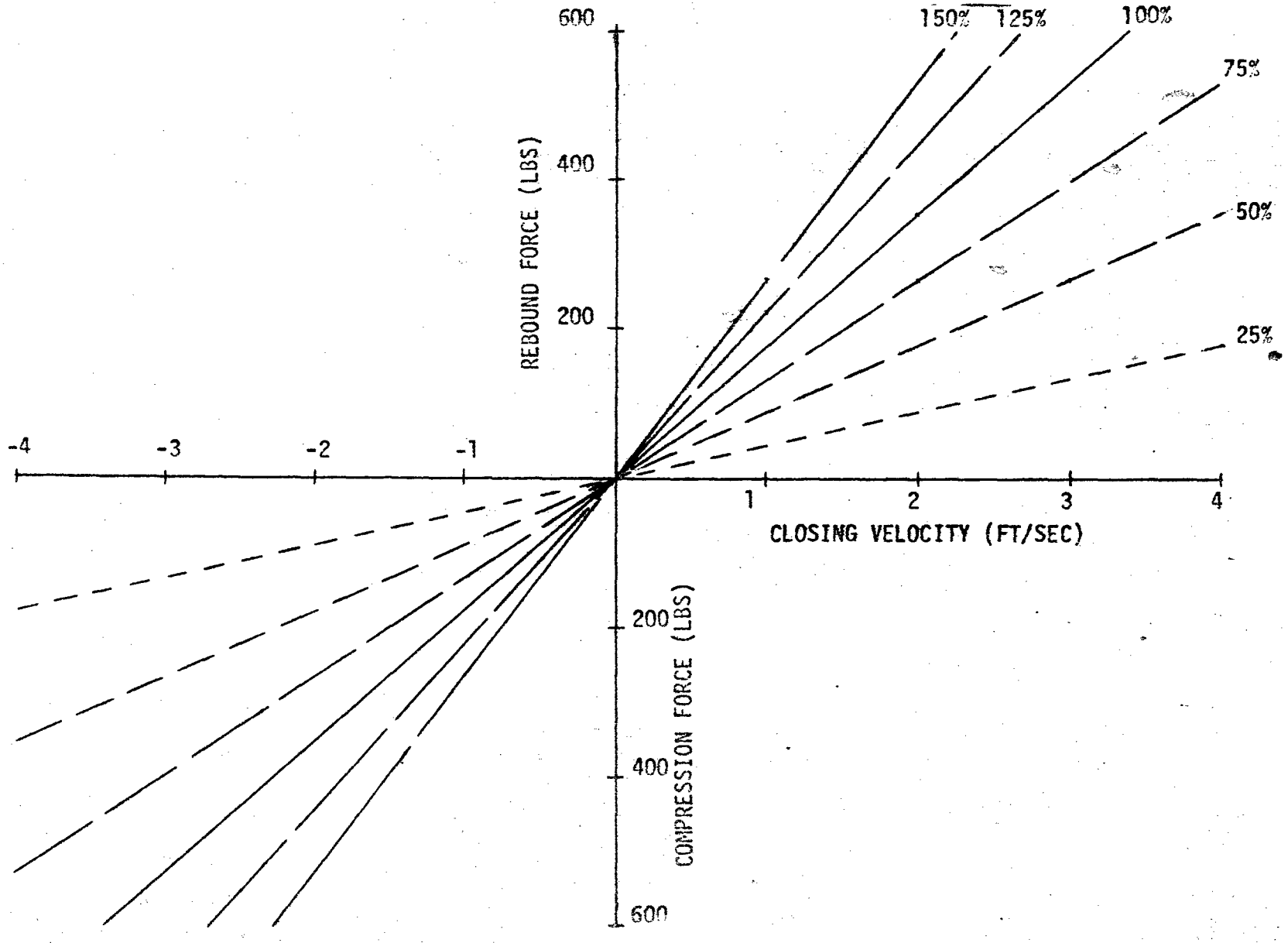

M151A2 REAR AXLE CONSTANT DAMPING CURVES

FIGURE 6-4

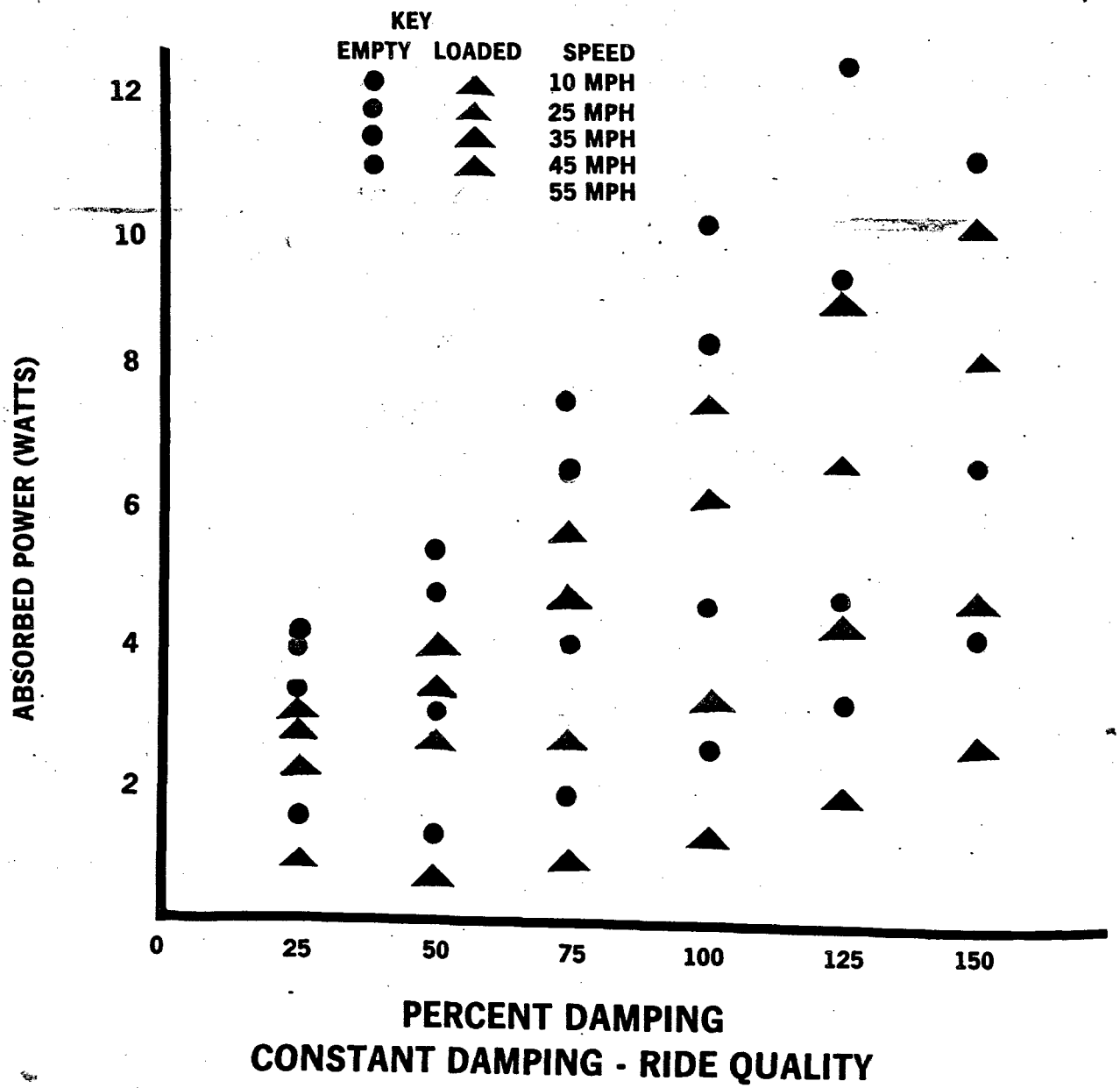
KEY
EMPTY
LOADED
SPEED
10 MPH
25 MPH
35 MPH
45 MPH
55 MPH
ABSORBED POWER (WATTS)
12
10
8
6
4
2
0
25
50
75
100
125
150
PERCENT DAMPING
CONSTANT DAMPING - RIDE QUALITY

FIGURE 6-5

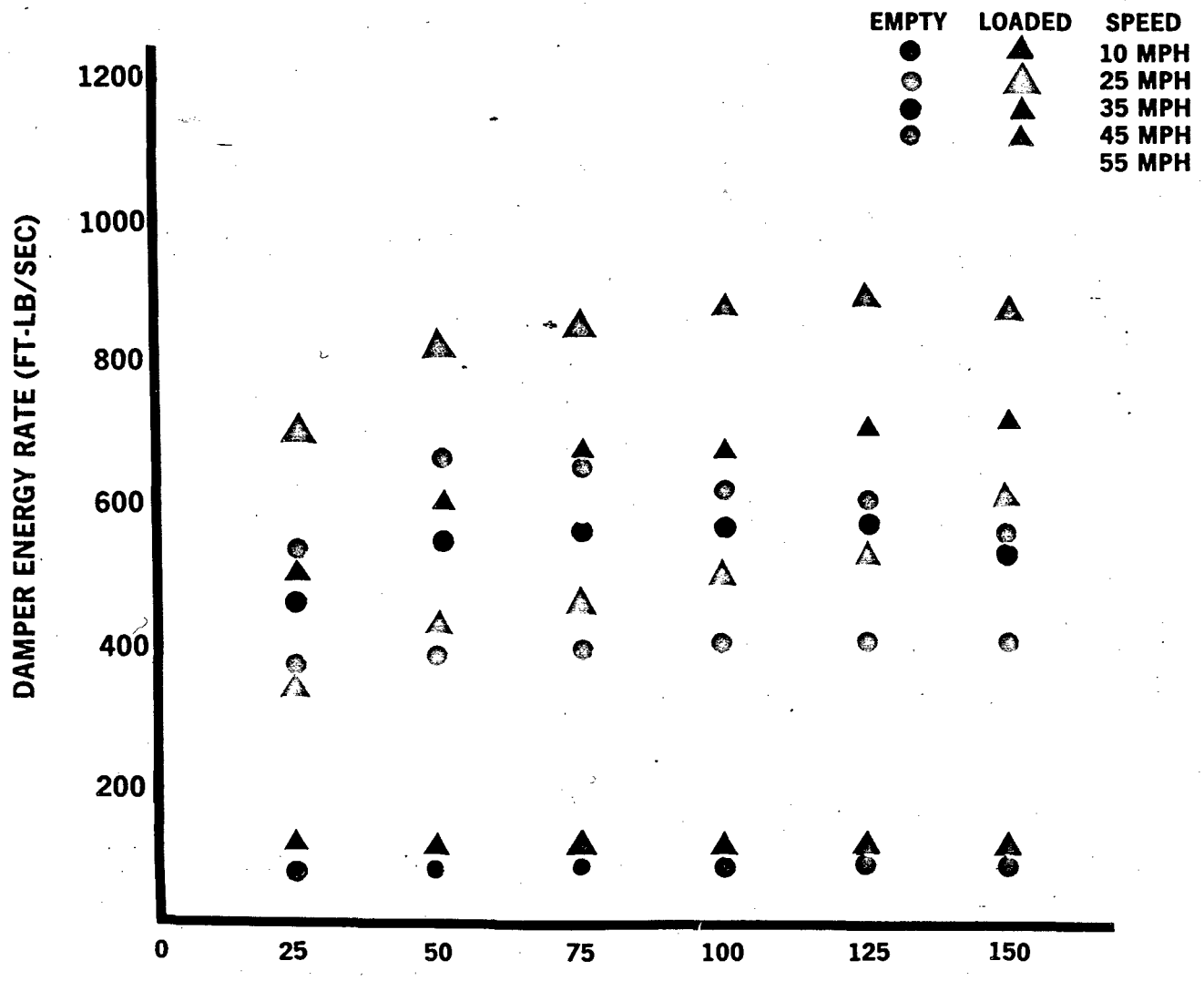

CONSTANT DAMPING - ENERGY RATES

FIGURE 6-6

TABLE 6-1

DRIVER'S ABSORBED POWER

2 INCH RMS TERRAIN

Vehicle Velocity	% DAMPING 25	50	75	100	125	150
10 mph	1.52/0.97*	1.32/0.62	1.88/0.91	2.62/1.39	3.38/1.92	4.32/2.65
25 mph	4.08/2.28	3.07/2.67	4.13/2.76	4.71/3.26	4.95/4.49	6.86/4.81
35 mph	4.05/2.91	5.51/3.45	6.67/4.85	8.59/6.31	9.53/6.81	11.32/8.37
45 mph	3.37/3.12	4.94/4.04	7.69/5.84	10.26/7.65	12.61/9.26	14.57/10.32
55 mph	9.97/3.70	6.72/7.63	30.24/21.53	39.57/28.24	46.04/34.18	28.97/14.41

* Empty/Loaded

TABLE 6-2

ABSORBED DAMPER ENERGY

2 INCH RMS TERRAIN

% DAMPING

Vehicle Velocity	25	50	75	100	125	150
10 mph	74/118	81/116	84/111	89/112	92/114	99/121
25 mph	374/348	395/422	398/463	398/505	412/538	415/574
35 mph	460/508	547/612	574/669	578/680	555/714	542/724
45 mph	535/706	643/823	663/871	622/883	586/894	556/879
55 mph	635/805	627/989	588/1058	542/1024	495/1001	465/942

* Empty/Loaded

TABLE 6-3

AVERAGE RMS CLOSING VELOCITY

2 INCH RMS TERRAIN

% DAMPING

Vehicle Velocity	25	50	75	100	125	150
10 mph	28/26	21/20	18/18	17/17	16/16	15/15
25 mph	55/54	44/43	37/36	32/32	29/28	26/26
35 mph	67/67	51/51	44/44	39/38	35/35	32/32
45 mph	74/78	57/59	49/50	44/45	39/41	35/35
55 mph	87/89	67/67	55/56	49/49	44/44	38/38

* Empty/Loaded

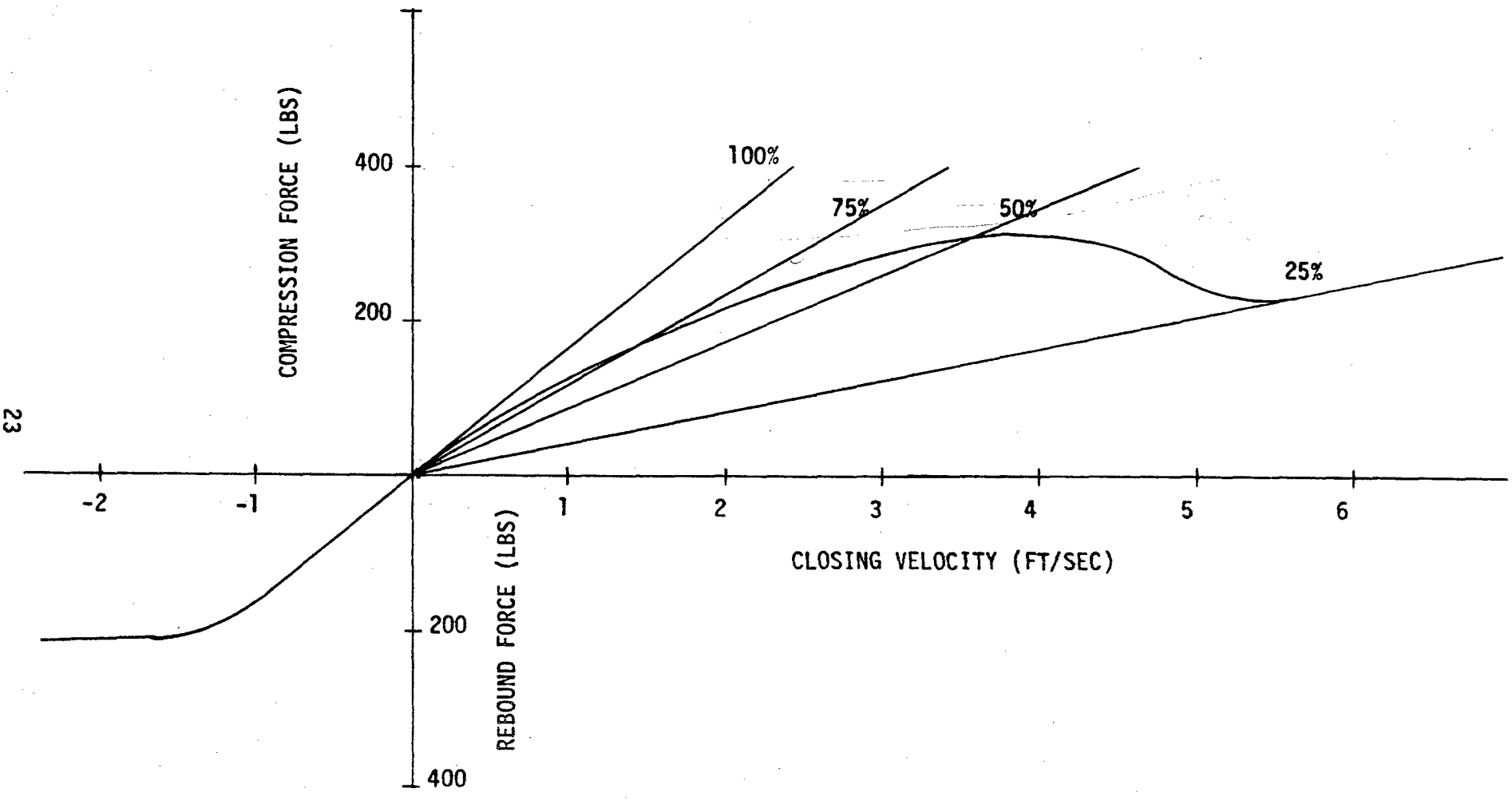

M151A2 FRONT OPTIMUM DAMPING CURVE

FIGURE 6-7

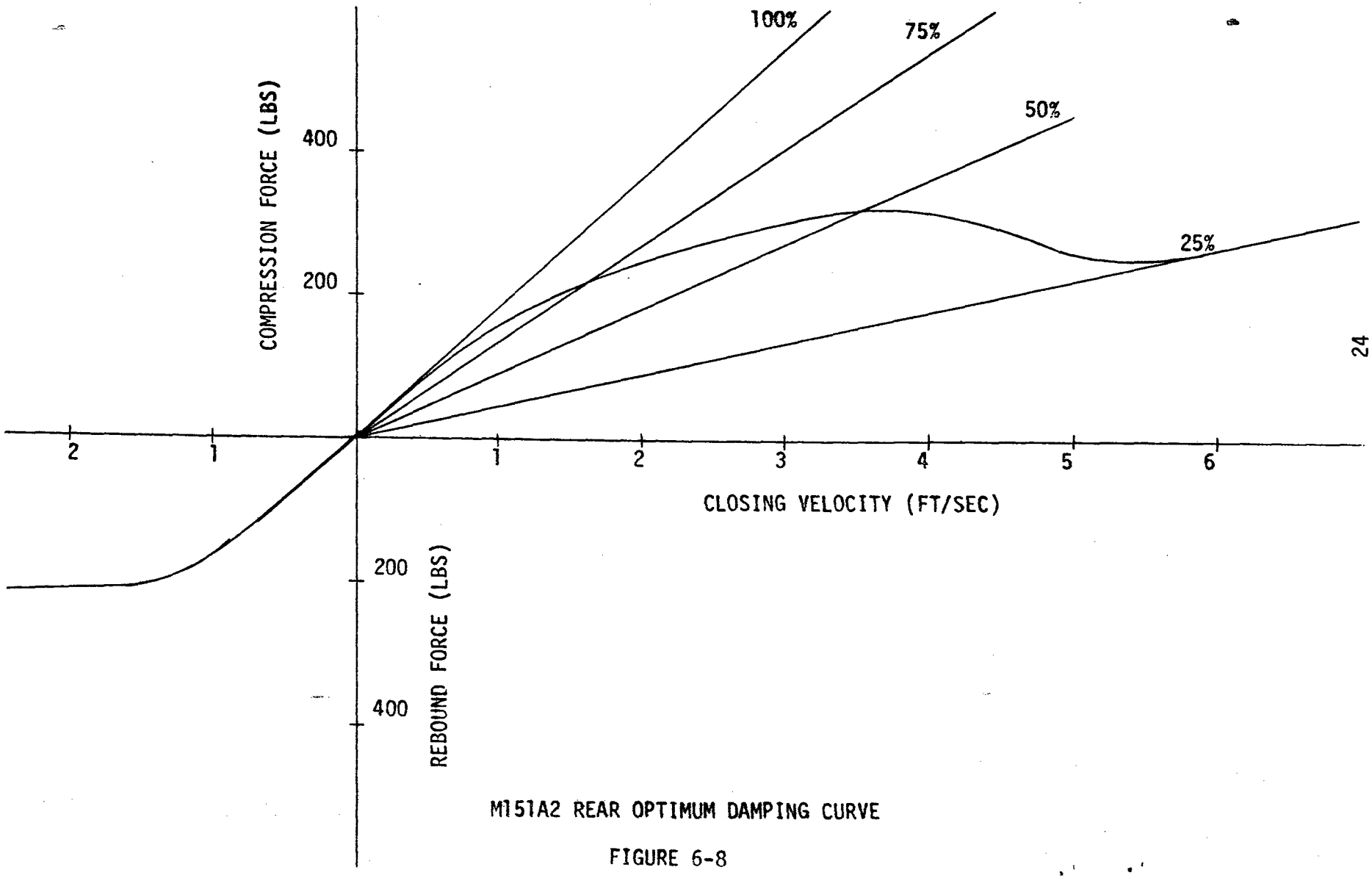

M151A2 REAR OPTIMUM DAMPING CURVE

FIGURE 6-8

jounce damping force. In lieu of a pure mathematical model of this system, which would require more computer capacity than currently available, manufacturer's damping curves for the M151A2 were programmed using multiple diode function generators available on the analog portion of the Hybrid Computer. The damping curves are shown in Figures 6-1 and 6-2 and the analog diagrams are presented in Appendix B.

CONSTANT DAMPING

Suspension damping directly proportional to the closing velocity of the sprung and unsprung masses is constant damping. This relationship is shown graphically in Figures 6-3 and 6-4. Where the 100% line represents the slope through zero of the conventional shock absorbers shown in Figures6-1 and 6-2.

The hybrid model was reconfigured with constant suspension damping to determine the relationships among vehicle velocity, damping and ride quality and among vehicle velocity, damping and absorbed damper energy for a given terrain definition.

The terrain (Section 7) chosen was a 2-inch rms stationary random process. System damping was then varied from 25% to 150% in 25% increments for each of five vehicle velocities, 10, 25, 35, 45, and 55 mph.

The resulting data are plotted on Figures 6-5 and 6-6.

OPTIMAL DAMPING

The optimal damping system, as defined in this section, produces a damping force as a function of damper closing velocity. Both conventional and constant damping produce forcing functions which increase with damper closing velocities. It has, however, been demonstrated in a previous

undocumented investigation that ride quality can be maximized and damper energy minimized by decreasing the forcing function at the higher damper closing velocities. The data presented in Figures 6-5 and 6-6 show that for a given terrain system definition both ride quality can be maximized and damper energy can be minimized as vehicle velocity increases by decreasing the percent damping force. Tables 6-1, 6-2, and 6-3 were constructed from the digital output data from the constant damping runs to provide the points necessary to plot a new damping curve which will be called the optimum damping curve. This curve is not necessarily the optimum damping curve for this vehicle, but is an optimum based upon the stated optimizing criteria and the assumptions made in modeling the vehicle.

The resulting optimum damping curves are presented in Figures 6-7 and 6-8. These curves were optimized in the jounce mode only in order to be comparable with the adaptive fluidic damper which initially will operate in the jounce mode only. Figures 6-7 and 6-8 were plotted directly from the optimum values in Tables 6-1 and 6-2 and their associated rms average closing velocities from Table 6-3.

The resulting graphs of vehicle velocity versus terrain rms at constant 6 watts and damper energy-versus-terrain rms at constant 6 watts are presented in Appendix D. Samples of the digital computer printouts are contained in Appendix E.

ADAPTIVE FLUIDIC DAMPING

BACKGROUND

An adaptive fluidic vibration damper concept was developed, (Ref. 1) under contract to the then U.S. Army-Tank Automotive Command. The damping device employs fluidic logic in its control circuit. Upon receipt of the final report (October 1975), which included the mathematics necessary to model the device, this damping device was integrated with the vehicle dynamics model of the M880 series 1¼-ton commercial truck. The results indicated no significant improvement over the standard damping device. Since the M880 vehicles are low in mobility and have small wheel travel (relative to frame) available, the investigation was shifted from the M880 to the M151A2 which is a high mobility ¼-ton 4 X 4 utility vehicle, with greater wheel travel in order to utilize the full capability of the fluidic damping device. The results of this investigation as presented in Appendix D, again show no significant improvement over the standard damper.

This section will present the adaptive fluidic vibration damper model, the investigation, and then describe how the adaptive damper concept was modified in order to achieve improved performance.

FLUIDIC DAMPER CONCEPT

The adaptive fluidic vibration damping concept is described in detail in Reference (1). This section will present only the mathematics necessary to conduct the computer evaluation of the concept. The adaptive concept in the compression (or jounce) mode consists of four components: a spring centered shuttle to sense vertical wheel acceleration, a beam

deflection amplifier to divert the flow of oil, a fluidic vortex valve to control damper force, and a spring-loaded blow-off valve to control maximum damper force. The extension (or rebound) stroke employs a conventional standard spring-loaded orifice valve to control damping force.

SHUTTLE DYNAMICS

The shuttle (acceleration sensor) is a spring-mass-damper system attached to the wheel (or lower) end of the damper housing and is represented by the following:

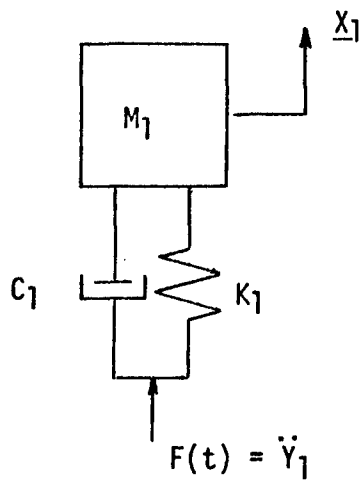

Where:

M_1 = Shuttle mass

C_1 = Sensor system damping coefficient

K_1 = Sensor system spring rate

$K(t) = Y_1$ = Vertical wheel acceleration

$\underline{X}_1$ = Shuttle position ground reference

The difference $\underline{X}_1 - Y_1$ is the position of the shuttle relative to the lower damper housing and is the output from the sensor system required for oil flow diversion to the vortex valve. Let:

$$X_1 = \underline{X}_1 - Y_1 \tag{6-1}$$

Similarily:

$$\dot{X}_1 = \dot{\underline{X}}_1 - \dot{Y}_1 \tag{6-2}$$

$$\ddot{X}_1 = \ddot{\underline{X}}_1 - \ddot{Y}_1 \tag{6-3}$$

The equation of motion for Figure 6-9 is:

$$M_1\ddot{\underline{X}}_1 + C_1(\dot{\underline{X}}_1-\dot{Y}_1) + K_1(\underline{X}_1-Y_1) = 0 \tag{6-4}$$

Substituting equations (6-1), (6-2), and (6-3) into equation (6-4) yields:

$$M_1\ddot{X}_1 + C_1\dot{X}_1 + K_1X_1 + M_1\ddot{Y}_1 = 0 \tag{6-5}$$

Rearranging equation (6-5):

$$\ddot{X}_1 + \frac{C_1}{M_1}\dot{X}_1 + \frac{K_1}{M_1}X_1 + \ddot{Y}_1 = 0 \tag{6-6}$$

The LaPlace transform of equation (6-6) yields the transfer function:

$$\frac{X_1(S)}{Y_1(S)} = \frac{1}{S^2 + \frac{C_1}{M_1}S + \frac{K_1}{M_1}} \tag{6-6a}$$

Computer simulations prior to incorporating the fluidic device have resulted in vertical wheel acceleration levels of 15 g's or less; therefore, in order to quantify $\frac{K_1}{M_1}$ and $\frac{C_1}{M_1}$, a maximum vertical wheel acceleration of

15 g's will be assumed. It is further assumed that maximum shuttle travel will be $\pm$ 0.125 inches. Maximum shuttle travel occurs at maximum wheel accelerations.

Therefore:

$$K_1 X_1 = M_1 \ddot{Y}_1 \tag{6-7}$$

where:

X_1 Max = 0.125 inches

$\ddot{Y}_1$ Max = 15g

so:

$$\frac{K_1}{M_1} = \frac{\ddot{Y}_1 \text{ Max}}{X_1 \text{ Max}} = \frac{15g}{0.125 \text{ In.}} \tag{6-8}$$

$$\frac{K_1}{M_1} = 15g \times \frac{32.2 \text{ ft.}}{\text{Sec}^2} \times \frac{1}{0.125 \text{ In.}} \times \frac{12 \text{ In.}}{\text{ft.}}$$

$$\frac{K_1}{M_1} = 46368/\text{Sec}^2 \tag{6-9}$$

For Critical Damping:

$$C_1 \text{ Critical} = 2\sqrt{K_1 M_1} \tag{6-10}$$

initially assume:

$$C_1 = \sqrt{2K_1 M_1}$$

or:

$$\frac{C_1}{M_1} = \sqrt{\frac{2K_1}{M_1}} \tag{6-11}$$

$$\frac{C_1}{M_1} = 304.5/\text{Sec} \tag{6-12}$$

Preliminary sensor response data indicated insufficient sensor response for proper damping control. Sensor system damping was gradually lowered while monitoring vehicle ride quality. As sensor damping was decreased, ride quality improved until a damping value of 1/3 critical was reached; then ride quality began to worsen. All evaluation runs were therefore made with:

$$\frac{C_1}{M_1} = \frac{1}{3}\sqrt{2K_1/M_1} = 100.0/\text{Sec} \tag{6-13}$$

$$S_1 = C_2(1-|X_1|);\ -1 \leq X_1 \leq 1,\ C_2 = 1 \tag{6-14}$$

$$\therefore\ 0 \leq S_1 \leq 1$$

However, the maximum value of X_1 is 0.125 inches and S, (the control signal) must reach 1 for full flow control thus:

$$S_1 = 1 - \frac{|X_1|}{X_1\ \text{Max}} \tag{6-15}$$

The control signal, S_1, from Equation (6-15) flows through a channel which is modeled as a low pass filter given by the following:

$$\frac{S_2(S)}{S_1(S)} = \frac{1}{C_3S+1} \tag{6-16}$$

The inverse Laplace transform of Equation (6-16) then is:

$$\dot{S}_2(t) + \frac{1}{C_3S_2(t)} = \frac{1}{C_3S_1(t)} \tag{6-17}$$

Where:

S_1 = Control signal

S_2 = Control signal after passing through the beam deflection amplifier control channel.

C_3 = Constant function of flow channel length, flow area and nozzle width = 8.7199×10^{-5} sec.

The control signal now passes into the beam deflection amplifier interaction region which causes a time delay from input S_2 to output S_3 and is given by the following:

$$\frac{S_3(S)}{S_2(S)} = e^{-C_4 S} \tag{6-18}$$

The inverse Laplace transform of Equation (6-18) is:

$$S_3(t) = S_2(t-C_4) \tag{6-19}$$

Where:

S_2 = Control signal

S_3 = Control signal after being delayed by the beam amplifier interaction region.

C_4 = Delay time in the interaction region given by Ref 1, P. 4-13, as approximately 0.4 milliseconds.

For the purpose of initial evaluation of the fluidic concept and considering computer hardware limitations, the effort required to simulate this delay is more significant than the delay itself and, therefore, is neglected in the simulation. Equation (6-19) thus becomes:

$$S_3(t) = S_2(t) \tag{6-20}$$

Upon exiting the beam deflection interaction region, the control signal passes through the beam deflection output channel delay. The transfer function through this channel is given by:

$$\frac{S_4(S)}{S_3(S)} = \frac{1}{C_5 S+1} \tag{6-21}$$

The inverse Laplace transform of Equation (6-21) is:

$$\dot{S}_4(t) + \frac{1}{C_5} S_4(t) = \frac{1}{C_5} S_3(t) \tag{6-22}$$

Where:

S_3 = Control signal

S_4 = Control signal upon exiting the beam deflection output channel.

C_5 = Constant function of flow channel length, flow area and nozzle width = 5.477×10^{-4} sec.

The control signal S_4 now enters the vortex chamber which imposes a delay given by the transfer function:

$$\frac{S_5(S)}{S_4(S)} = e^{-C_6 S} \tag{6-23}$$

The inverse Laplace transform of Equation (6-23) is:

$$S_5(t) = S_4(t-C_6) \tag{6-24}$$

Where:

S_4 = Control signal

S_5 = Control signal after being delayed by the vortex chamber.

C_6 = Delay time in the vortex chamber given by Ref 1, P. 4-13 as approximately 0.45 milliseconds.

As previously stated for this analysis, the small delay time is neglected and Equation (6-24) becomes:

$$S_5(t) = S_4(t) \tag{6-25}$$

The control signal S_5 diverts the flow of supply oil going to the vortex chamber either straight to the vortex or around the periphery or proportionally between these two extremes proportional to vertical wheel acceleration. The resulting damping force is given in Ref 1, P. 3-28 as:

$$F(t) = A_r C_7 \left[1.75 + (19.35 - 1.75)S_5\right] \tag{6-26}$$

Where:

$C_7 = 22230(\dot{Y}_3-\dot{Y}_1)^2$ Lb/Ft^2

$\dot{Y}_3-\dot{Y}_1$ = Damper stroke velocity

A_r = Vortex outlet area = 2.12031×10^{-3}Ft^2

Substituting the above values into Equation (6-26) gives:

$$F(t) = 82.959(\dot{Y}_3-\dot{Y}_1)^2 + 829.57S_5(\dot{Y}_3-\dot{Y}_1)^2 \qquad (6\text{-}27)$$

The spring loaded blow-off valve limits F(t) to some predetermined maximum damping force. The force vs velocity damping curve is shown in Figure 6-10. Appendix B contains the analog computer road maps used in the simulation of the adaptive concept. Appendix D contains the performance curves for the damping concepts considered in this report.

ADAPTIVE FLUIDIC VIBRATION DAMPER MOD I

The Adaptive Fluidic Vibration Damper Mod I was developed in an effort to improve the sensitivity of the original concept. The observed operating region of the adaptive damper shown in Figure 6-10 with acceleration control is a very narrow band depicted by the shaded portion of the damper curve. Acceleration control does not exploit the full adaptive capability of the subject damping concept. It was, therefore, concluded that wheel acceleration alone does not provide a complete control signal. It was observed that high wheel accelerations do not often occur at high damper closing velocities. Reduced damping should also be present at high wheel velocities, to transmit a reduced force to the vehicle sprung mass.

The Mod I Damper employs a summation of vertical wheel acceleration and velocity to control the flow of supply oil to the vortex, thus, broadening the operating damper force band between the maximum and minimum damping curves, shown in Figure 6-10.

In order to incorporate the velocity control into the control signal S_5 from Equation (6-25), the velocity was weighted (scaled) such that at maximum wheel velocity a unity signal is summed with the shuttle signal X_1 in Equation (6-15). The following conditions are assumed:

The new control signal S_1' will be generated by summing the weighted velocity to Equation (6-15):

$$S_1' = S_1 - S_6 \tag{6-28}$$

Where:

$$S_6 = |Y_1|/Y_1 \text{ maximum, for unity scaling} \tag{6-29}$$

or:

$$S_1' = 1 - \frac{|X_1|}{X_1 \text{ Max}} - \frac{|\dot{Y}_1|}{\dot{Y}_1 \text{ Max}} \tag{6-30}$$

where:

$$0 \leq \frac{|X_1|}{X_1 \text{ Max}} \leq 1 \tag{6-31}$$

and:

$$0 \leq \frac{|\dot{Y}_1|}{\dot{Y}_1 \text{ Max}} \leq 1 \tag{6-32}$$

Minimum damping is desirable when:

$$S_1 \longrightarrow 0 \tag{6-33}$$

or when:

$$S_6 \longrightarrow 1 \tag{6-34}$$

or when:

$$S_1' \longrightarrow 0 \tag{6-35}$$

Maximum damping is desirable only when:

$$S_1' \longrightarrow 1 \tag{6-36}$$

These conditions are represented by surfaces A and B in Figure 6-11.

In order to simulate these conditions, the following is assumed: The limit of S_1' as both $\frac{|X_1|}{X_1 \text{ Max}}$ and $\frac{|\dot{Y}_1|}{\dot{Y}_1 \text{ Max}}$ approach 1 must be 0. This is simulated by simply limiting S_1' to be positive.

The weighted wheel velocity S_6 is available directly from the computer simulation of the vehicle dynamics and was used for the initial evaluation runs. The vehicle velocity vs terrain rms, at a constant 6 watts ride index, is shown on the graph in Appendix D. These curves demonstrate a significant ride improvement incorporating Mod I.

S_6 is not directly available in the current damping device design and, therefore, must be approximated. A simple fluidic lag circuit can be designed to obtain S_6 from the sensor output signal. Mathematically, this circuit takes the form:

$$\frac{S_6(S)}{Y_1(S)} = \frac{1}{TS+1} \tag{6-37}$$

It was experimentally determined that for $T \geq .3$, no significant degradation in damper performance results.

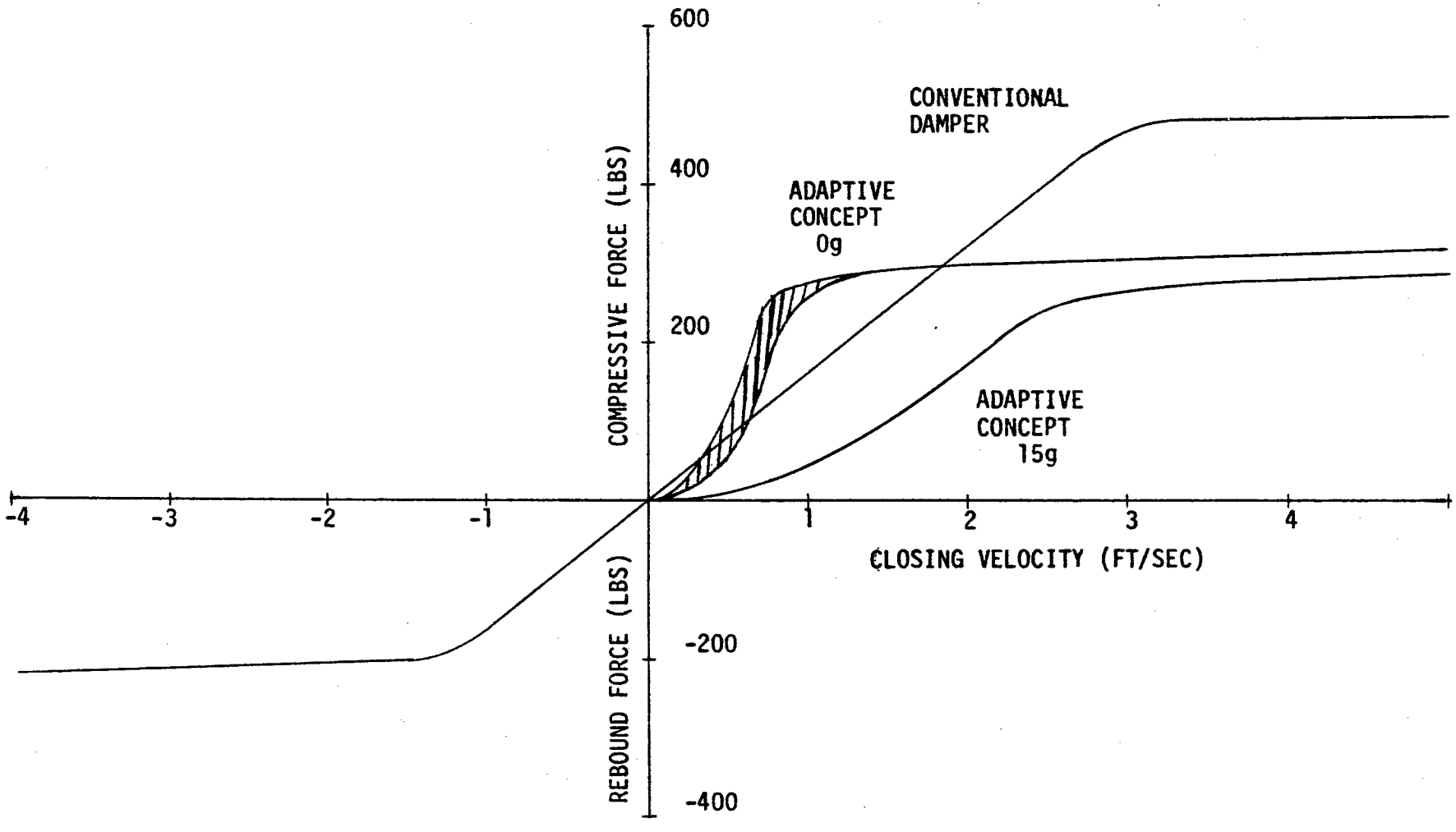

DAMPER CURVES

FIGURE 6-10

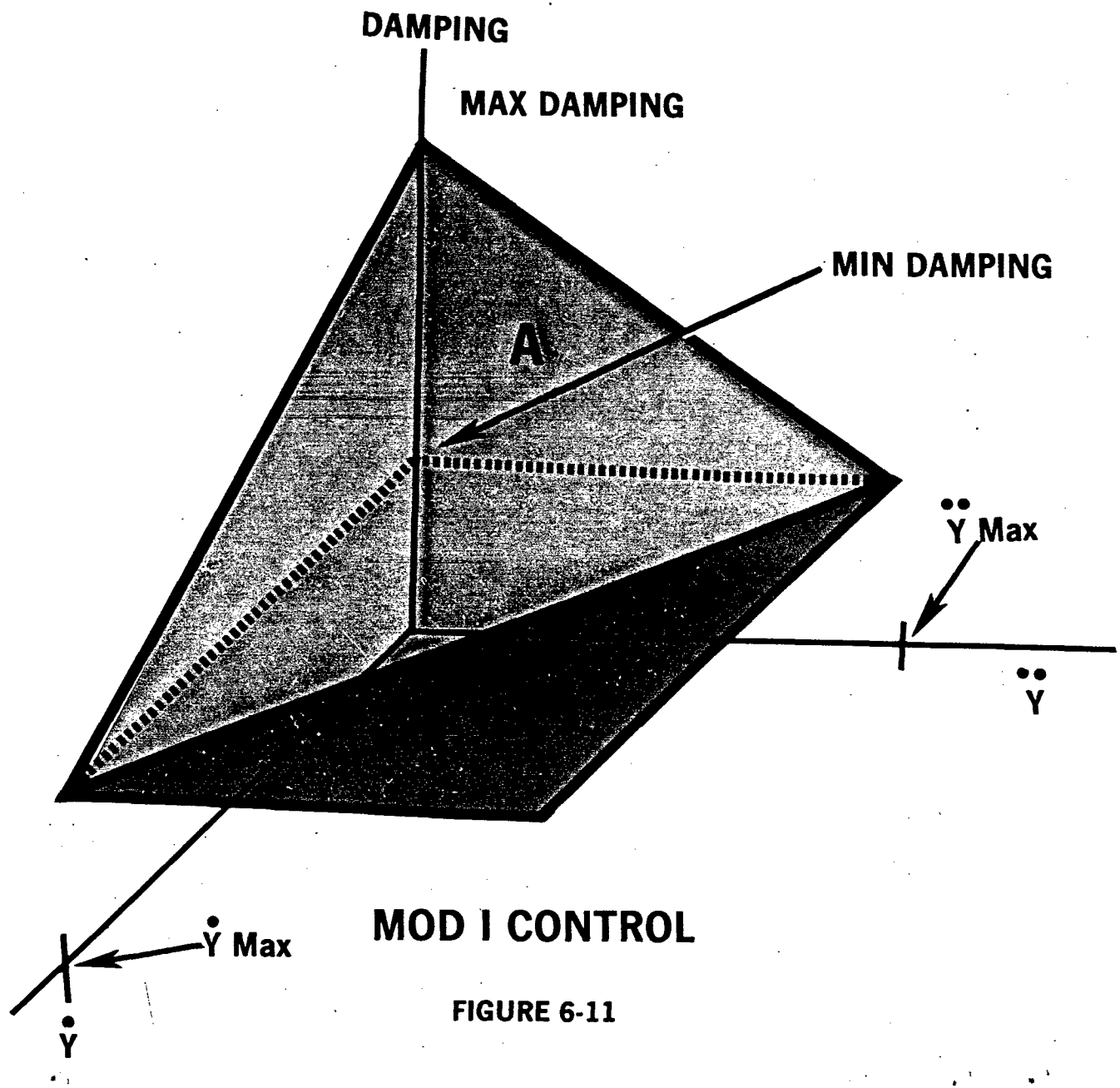

MOD I CONTROL

FIGURE 6-11

ADAPTIVE FLUIDIC VIBRATION DAMPER MOD II

The Mod II fluidic damper configuration is an attempt to simplify the Mod I concept by eliminating the acceleration control. Mathematically Equation 3-30 becomes:

$$S_1' = 1 - \frac{Y_1}{Y_1 \text{ Max}} \tag{6-38}$$

For the Mod II damper as with the Mod I damper Y_1 max is scaled to 20 ft per second. The results of the Mod II damper evaluation are found in Appendices D & E.

In an effort to increase the performance of the Mod II damper Y_1 max was rescaled to 15 feet per second. This configuration is called Mod IIB in Appendices D & E.

The force-velocity curve shown in Figure 6-10 also applies to the Mod II and Mod IIB configurations except that the variability between the maximum and minimum force curves is controlled by vertical wheel velocity instead of vertical wheel acceleration.

ADAPTIVE FLUIDIC VIBRATION DAMPER MOD III

The adaptive fluidic vibration damping device previously discussed was applied only to the front suspension and adaptively controlled only the jounce cycle. Mod III damping extends Mod II damping to include adaptive control to the rebound cycle as shown in Figures 6-12 and 6-13. Mod III damping control was also integrated at both front and rear suspensions of the vehicle dynamics model. The performance of this system is shown graphically in Appendix D and digitally in Appendix E.

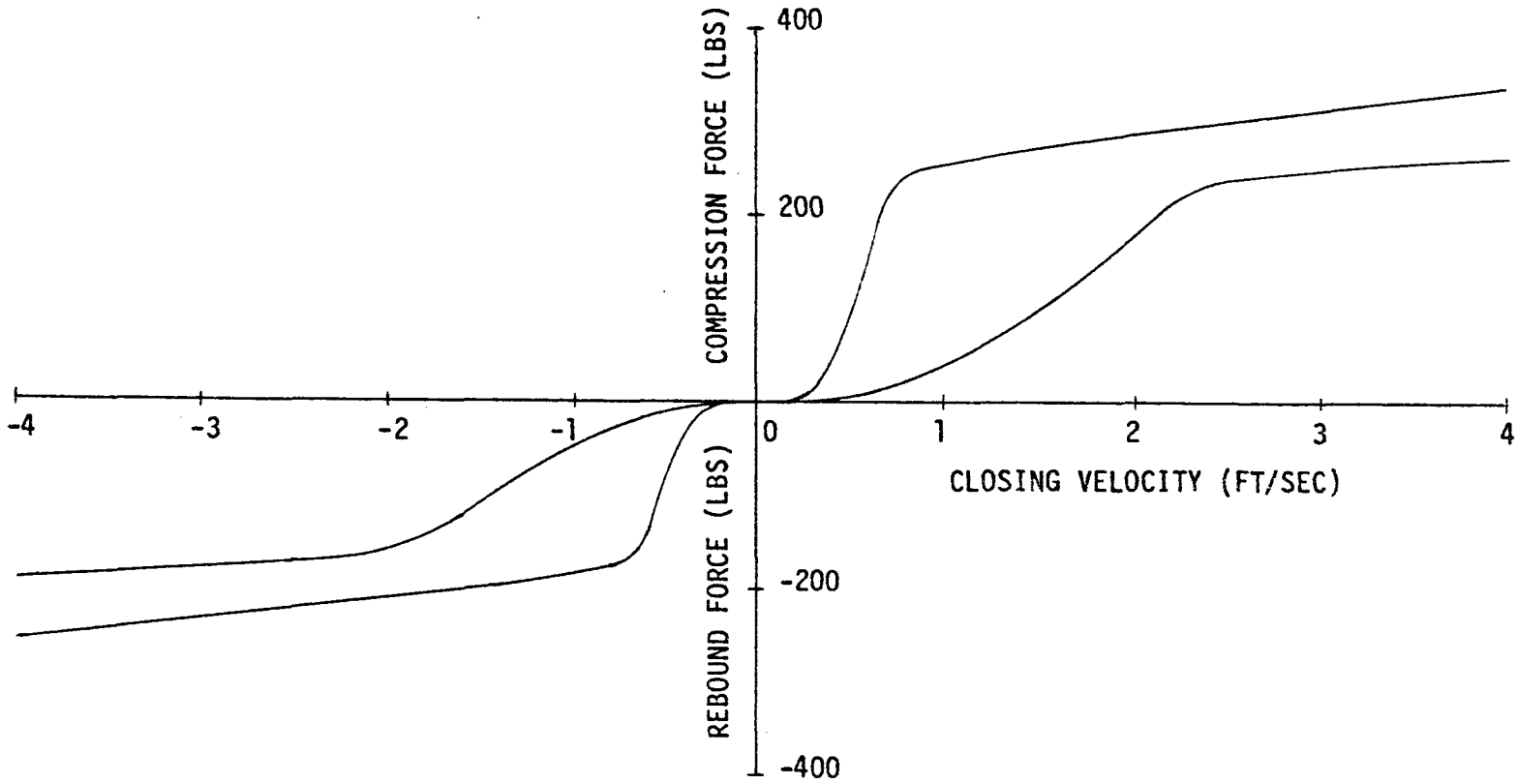

FRONT DAMPER CURVE - MOD III

FIGURE 6-12

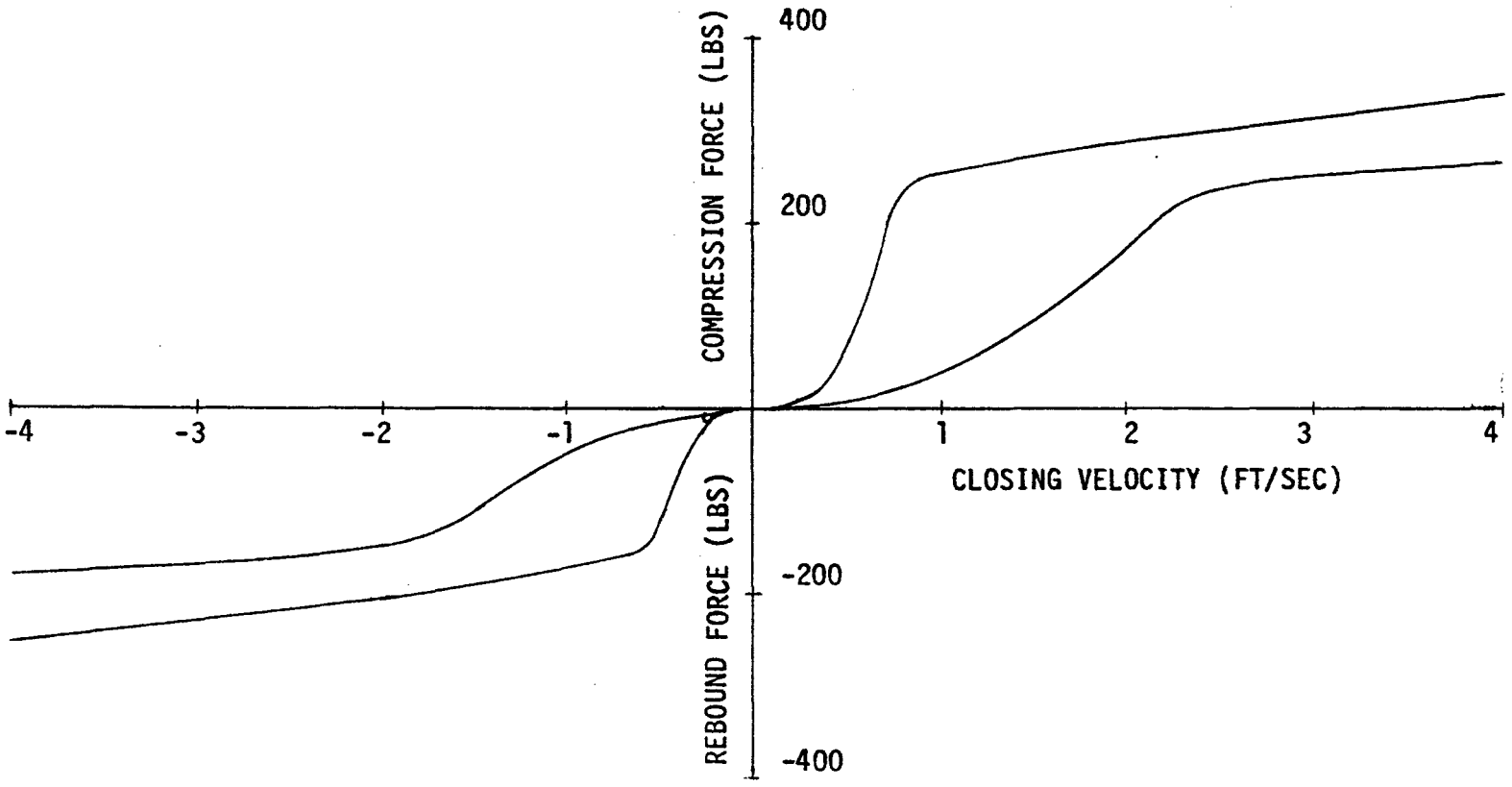

REAR DAMPER CURVE - MOD III

FIGURE 6-13

7. TERRAIN DEFINITION

The classification of terrains from smooth paved highways to extremely rough virgin cross-country fields is described in detail by Bekker in Reference 2. The terrain type used in the evaluations of the various damping devices presented in Section 6 is defined by the equation:

$$S_{yy}(\Omega) = K\Omega^{-n} \tag{7-1}$$

where $S_{yy}(\Omega)$ is power spectral density (PSD), K and n are constants and is spatial frequency in cycles per foot. The smoothness of the surface increases with the decrease of K and the decrease of n. For most terrain surfaces, it has become acceptable to let n=2. The parameter K then becomes the adjustable variable to obtain various degrees of roughness.

The mean-square of the terrain roughness is computed by the following:

$$S^2 = \int S_{yy}(\Omega)d\Omega \tag{7-2}$$

The root mean-square (rms) of the terrain roughness is then the $\sqrt{S^2}$. The terrain rms is therefore a function of K.

A 300-foot length of terrain with points every foot was generated by passing a white noise signal through a filter defined by Equation (7-1). The output was then digitized and stored on disc in the digital computer. A scale factor is used to vary terrain roughness by either gaining or attenuating each of the terrain elevation points. Terrain thus generated is called a stationary random terrain with zero mean and rms defined by Equation (7-2). A PSD plot of the terrain is shown in Figure (7-1).

A delayed description of both the point contact tire model and the rigid treadband tire models can be found in Reference 3.

The 300 terrain data points are modified by digitally computing the effect of passing a rigid band tire of appropriate diameter over the terrain at zero velocity. These calculations yield a wheel center trajectory which is held in core memory for use as the input to the point contact wheel model. Having calculated the magnitude of the points to be generated, the time interval between points is calculated as a function of the desired vehicle velocity and point spacing, which is one foot in this case. It is this calculation which allows the emulation of the effect of varying vehicle velocity. The resulting output is the variable Y_{tf} in Figure 5-1. Y_{tf} is appropriately delayed by the vehicle wheel base and vehicle velocity to produce Y_{tr}.

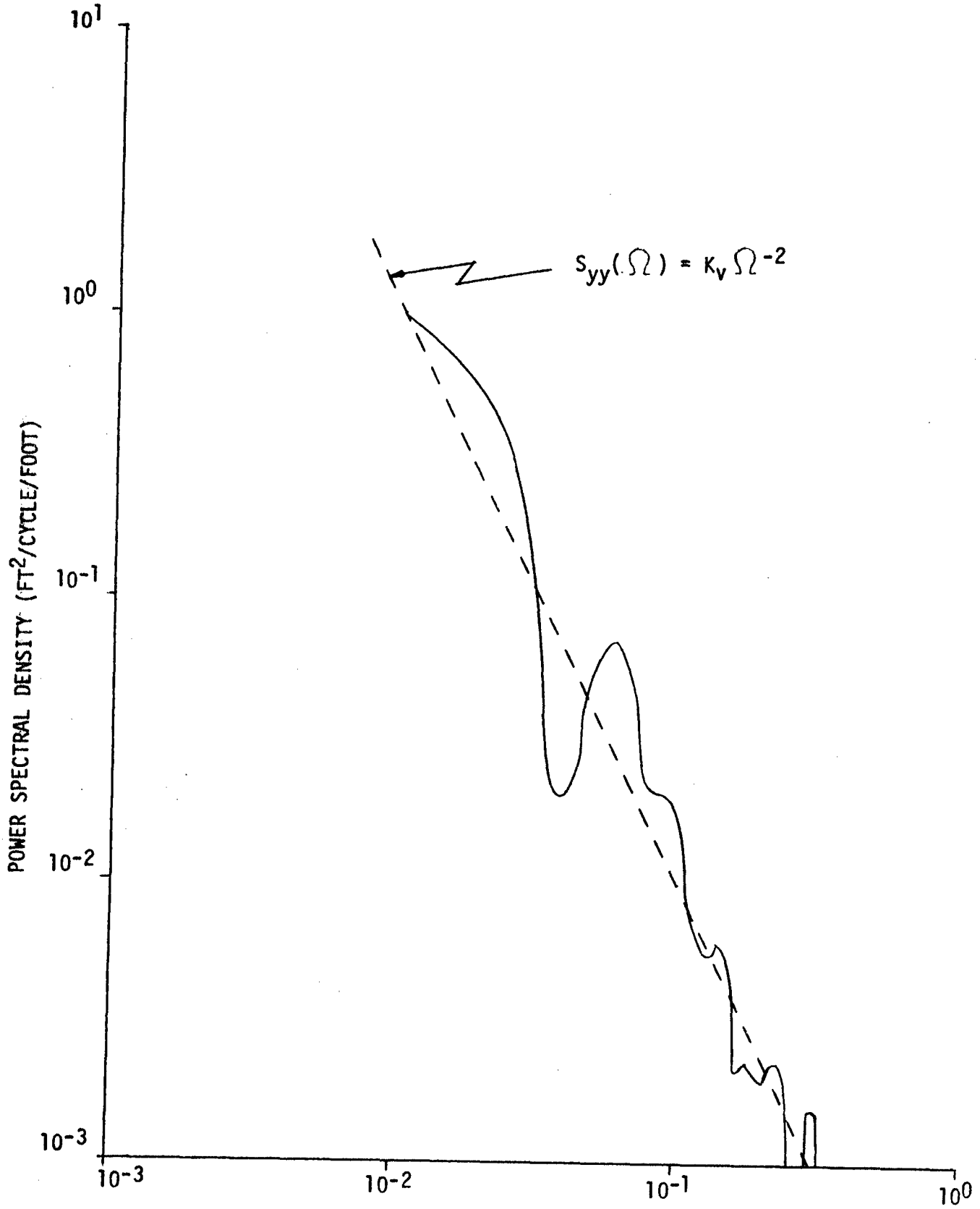

SPATIAL POWER SPECTRAL DENSITY OF TERRAIN
FIGURE 7-1

8. ABSORBED POWER CRITERION

The driver's absorbed power criterion is a means of quantifying a vehicle's ride performance. Lins in Reference 4 presents a detailed discussion of the research chronology leading functions by which driver's absorbed power can be calculated and the limit of average absorbed power which a driver should be expected to sustain. This limit for extended exposure is 6 watts.

The transfer function from vertical acceleration input to the driver to absorbed power is given by the following:

$$\frac{P(S)}{Y_d(S)} = \frac{15.453\ S(S + 5.0)(S^2 + 28.3S + 2800)(S^2 + 105.0S + 7570)}{(S + 6.0)(S^2 + 29.8S + 1000)(S^2 + 39.1S + 3800)(S^2 + 125.0S + 5180)}$$

The analog computer road map for this absorbed power computation is found in Appendix A. For the ride evaluation of the damping concepts, the absorbed power was averaged over the total length of terrain which was approximately 1/2 mile.

The graphical absorbed power results are found in Appendix D and a sample of the digital output is found in Appendix E.

9. DAMPER ENERGY

Damper energy is defined as the amount of work that the damping device must do to control the oscillatory motion of the sprung mass of the vehicle. Damper energy is a measure of the durability performance of the damping device in that-as the damper is required to absorb more energy, the temperature of the oil inside the damper rises. An extreme elevation of oil temperature can cause blown seals, due to an elevated pressure within the damper; hence loss of oil or the oil can break down causing a loss of its lubricity and viscosity characteristics. Any one of these three conditions: loss of oil, loss of lubricity, or loss of viscosity, is sufficient for damper failure.

The optimal damper, therefore, must provide only as much force as is required to minimize the motion of the sprung mass. This investigation provides data on the absorbed damper energy for the dampers evaluated under varying terrain and vehicle velocity environments.

The equation describing the damper energy is given by the following:

$$\text{Energy} = \int_0^T FVdt \qquad (9\text{-}1)$$

Where:

T = The time to traverse the terrain

F = The damping force

V = The damper closing velocity

Equation 6-1 represents the total energy absorbed by the damper. Energy per unit time is then found by dividing Equation 9-1 by T.

The energy-terrain-velocity curves for the damper concepts are found in Appendix D and the digital outputs from sample runs are found in Appendix E.

The analog computer road maps used in the computation of the damper energy are found in Appendix A.

BIBLIOGRAPHY

1. Bowles, R. E., Steele, M. M., Dziewit, R. J., "Investigation of an Adaptive Fluidic Vibration Damper", U.S. Army Tank-Automotive Command, Warren, Michigan, No. 12086, October 1975.

2. Bekker, M. G., "Introduction to Terrain-Vehicle Systems", The University of Michigan Press, Ann Arbor, Michigan, 1969.

3. Captain, K. M., Wormley, D. N. Grande, E., "The Development and Comparative Evaluation of Analytical Tire Models for Dynamic Vehicle Simulation", U.S. Army Tank-Automotive Command, Warren, Michigan, No. 11877, May 1974.

4. Lins, W. F., "Human Vibration Response Measurement", U.S. Army Tank-Automotive Command, Warren, Michigan, No. 11551, June 1972.

APPENDIX A

ANALOG COMPUTER ROAD MAPS

VEHICLE DYNAMICS

ABSORBED POWER

DAMPER ENERGY

BOUNCE DYNAMICS

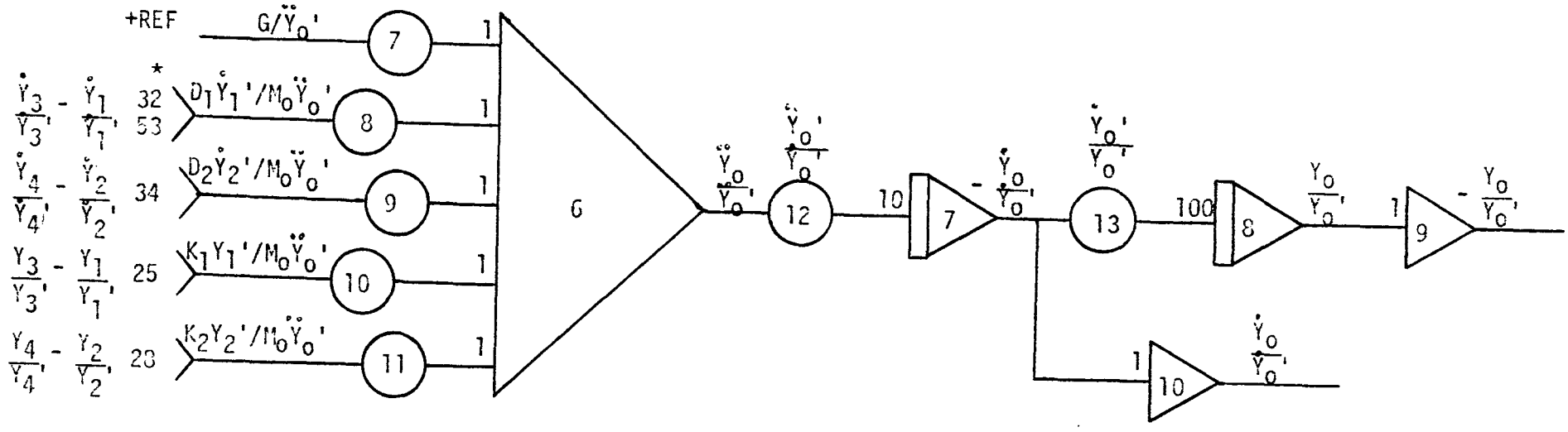

*NOTE: AMPL. 32 CONVENTIONAL DAMPER

AMPL. 53 ADAPTIVE FLUIDIC VIBRATION DAMPER CONCEPT AND MOD I

PITCH DYNAMICS

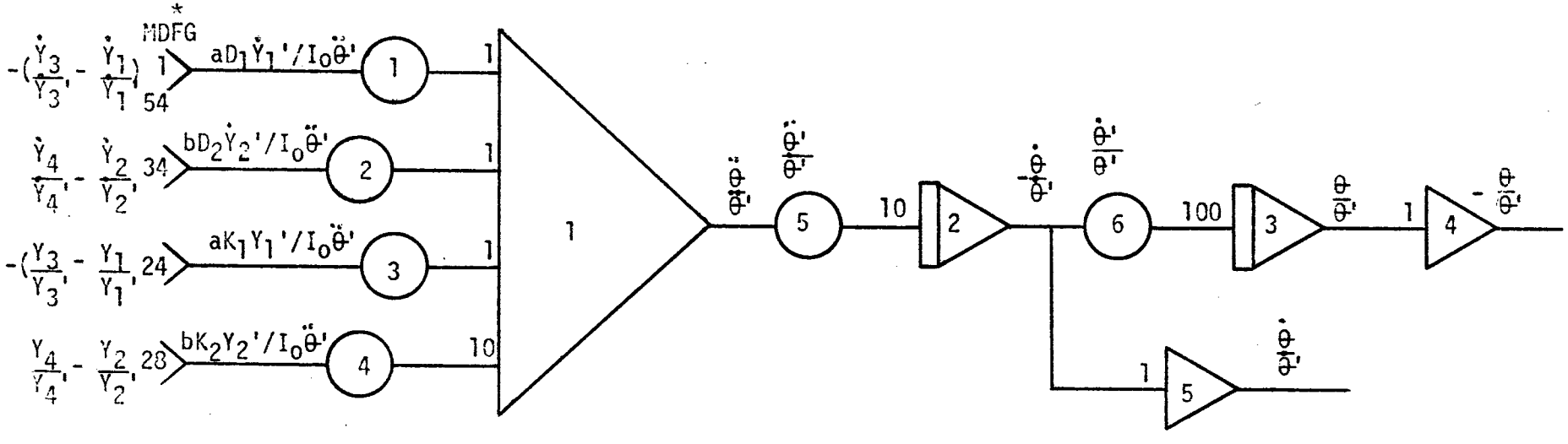

*NOTE: MDFG 1 CONVENTIONAL DAMPER

AMPL 54 ADAPTIVE FLUIDIC VIBRATION DAMPER CONCEPT AND MOD I

FRONT SPRING CURVE

(M151A2)

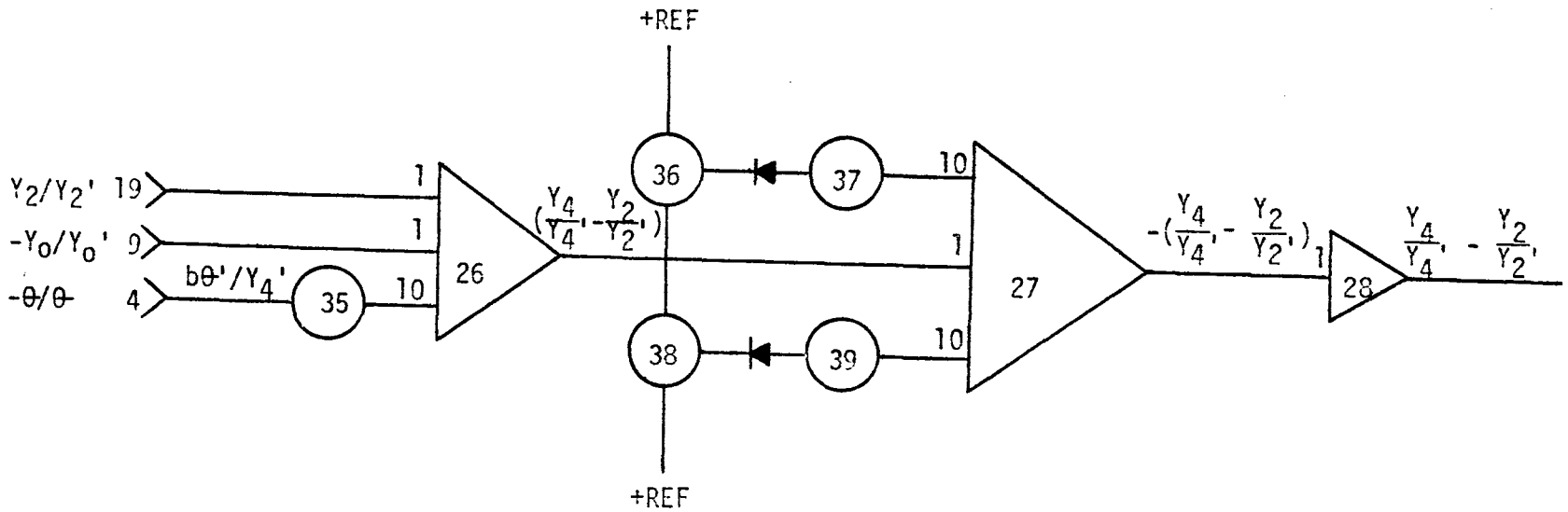

REAR SPRING CURVE

(M151A2)

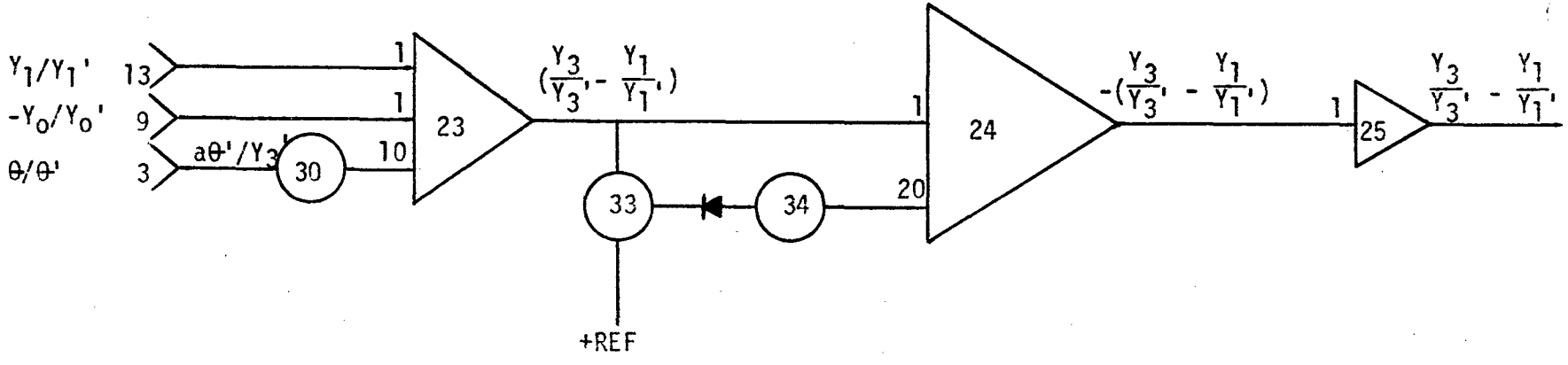

FRONT WHEEL DYNAMICS

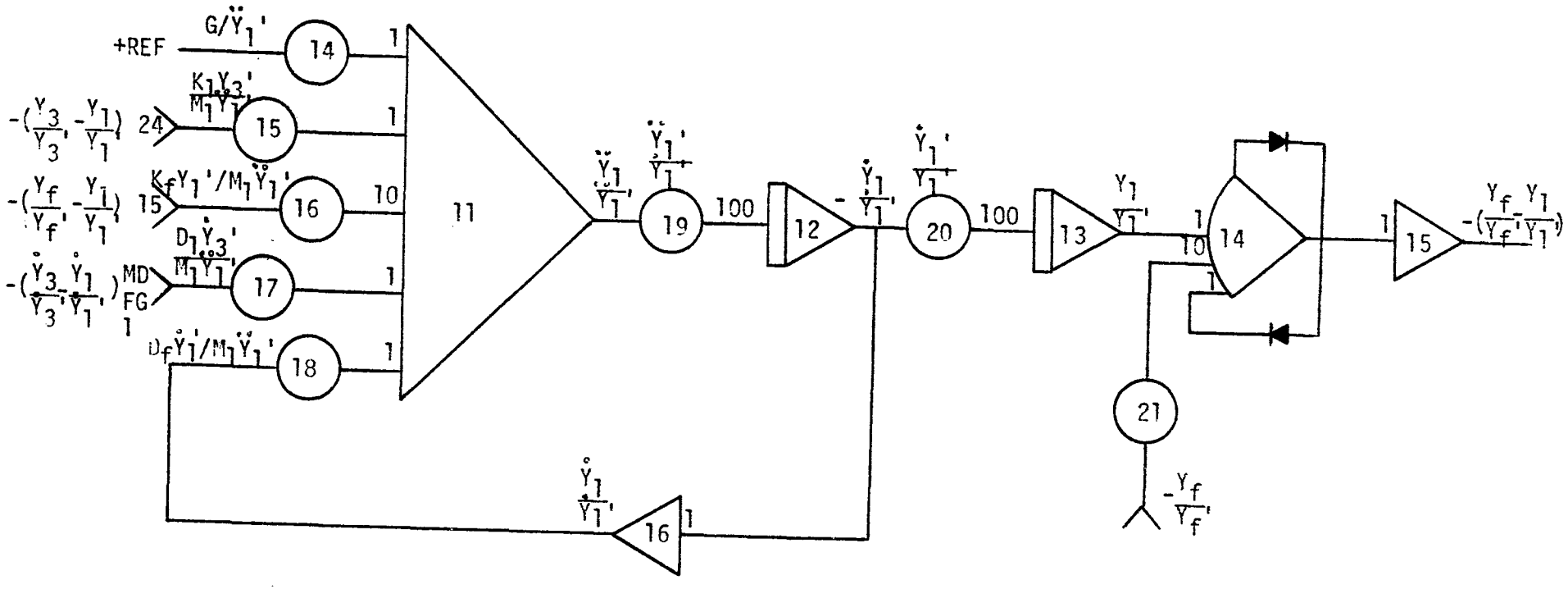

REAR WHEEL DYNAMICS

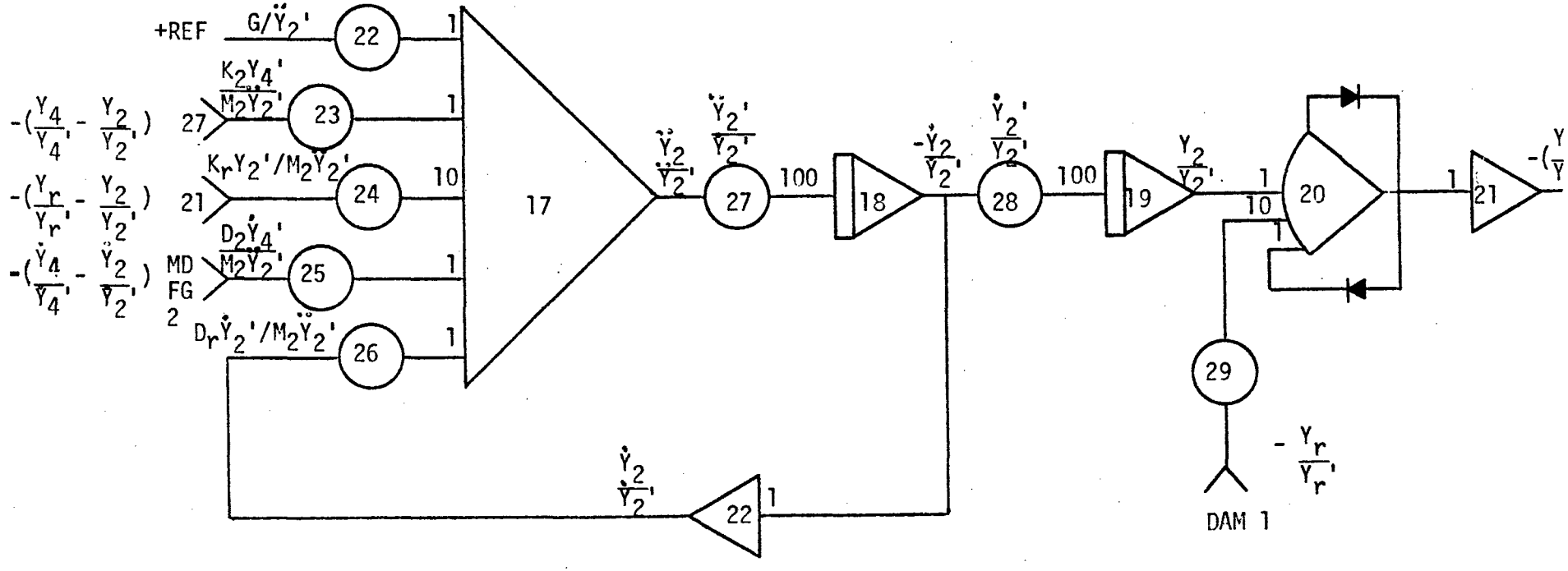

DRIVER ACCELERATION

(M151A2)

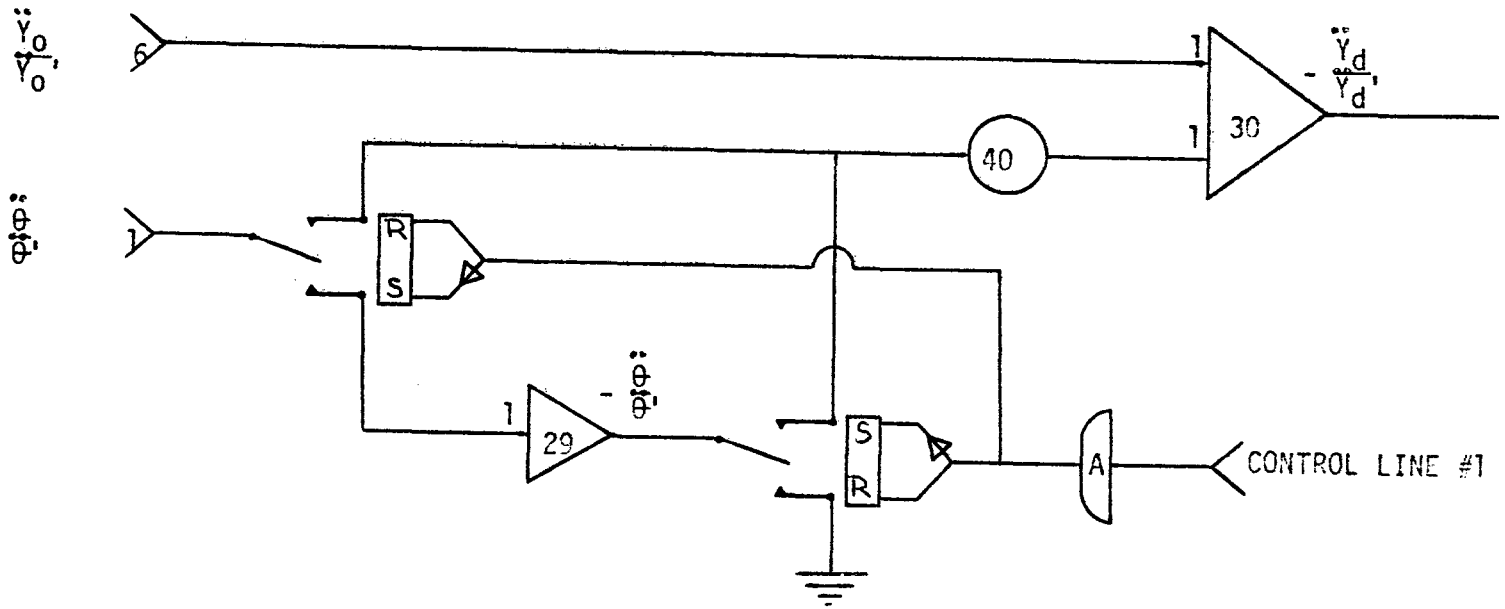

ABSORBED POWER CIRCUIT

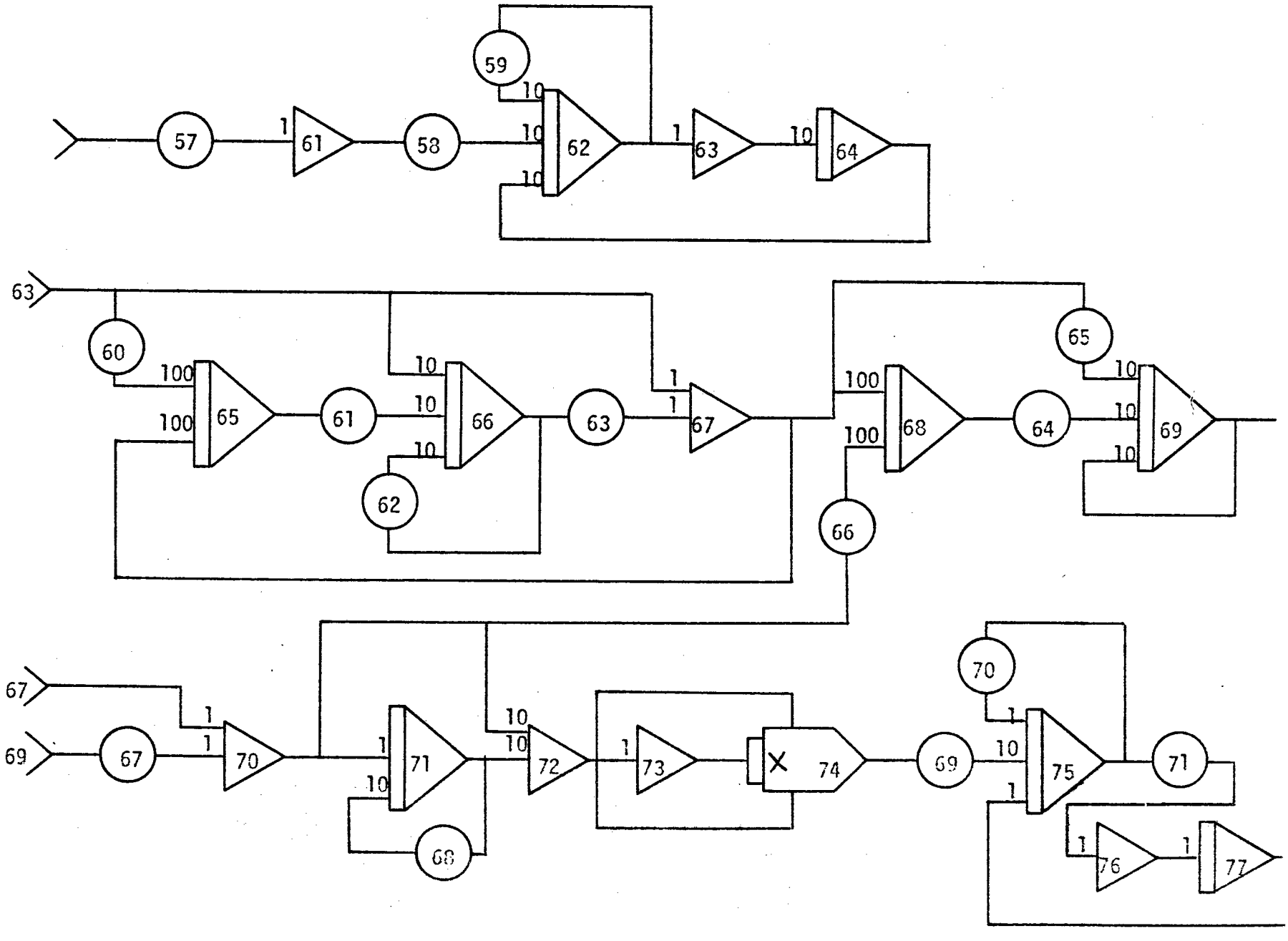

FRONT DAMPER ENERGY

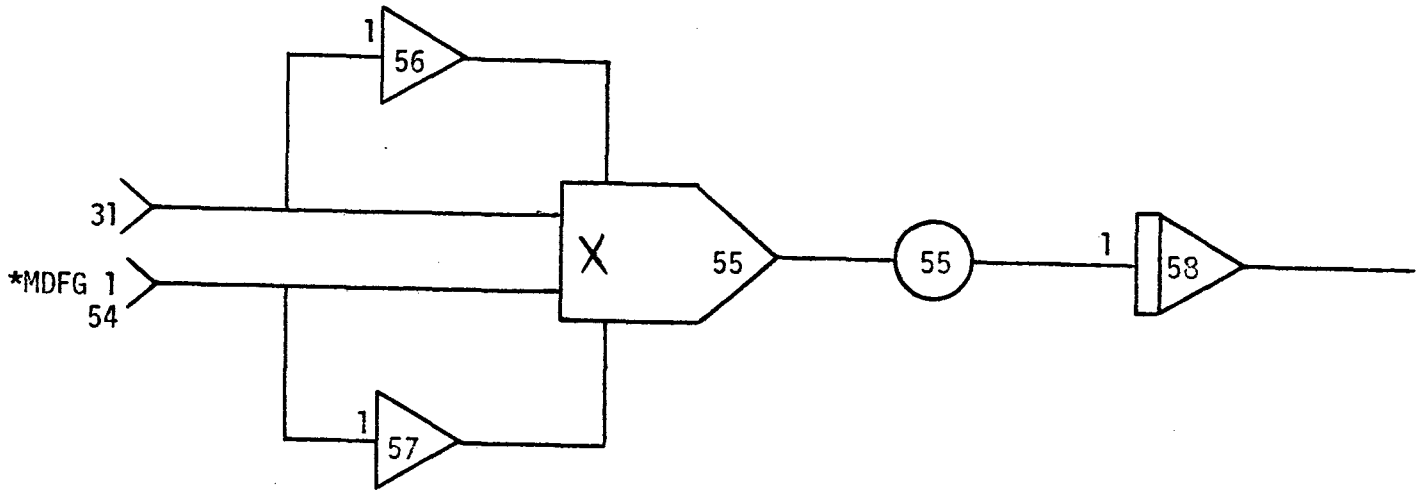

*NOTE: MDFG 1 CONVENTIONAL DAMPER

AMPL. 54 ADAPTIVE FLUIDIC VIBRATION DAMPER CONCEPT AND MOD I

REAR DAMPER ENERGY

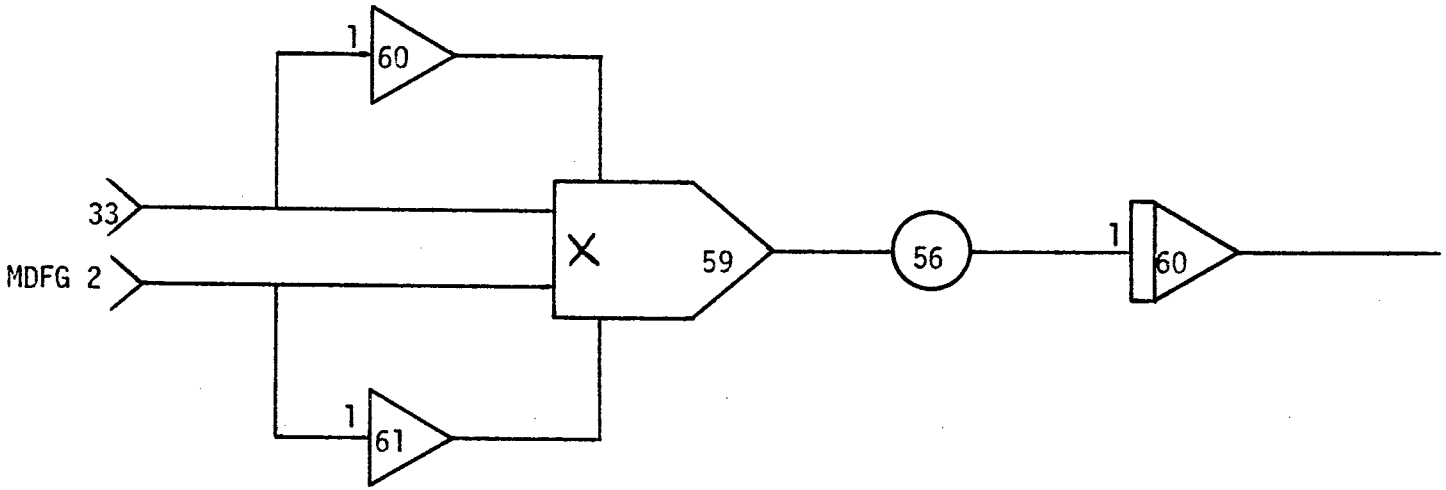

APPENDIX B

ANALOG COMPUTER ROAD MAPS

CONVENTIONAL AND OPTIMAL DAMPING

CONSTANT DAMPING

ADAPTIVE FLUIDIC DAMPER

MOD I

MOD II

MOD IIB

MOD III

CONVENTIONAL AND OPTIMUM FRONT DAMPER

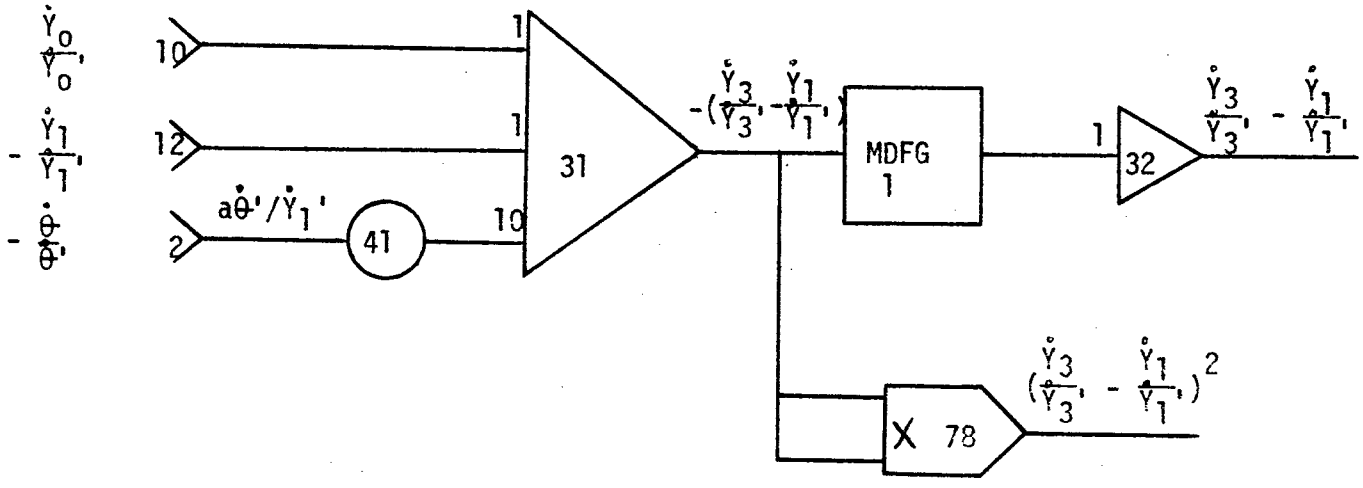

CONVENTIONAL AND OPTIMUM REAR DAMPER

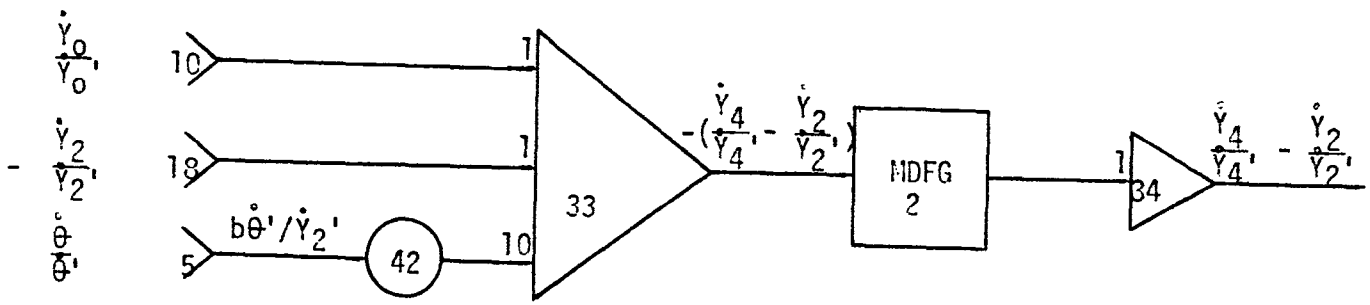

CONSTANT FRONT DAMPER

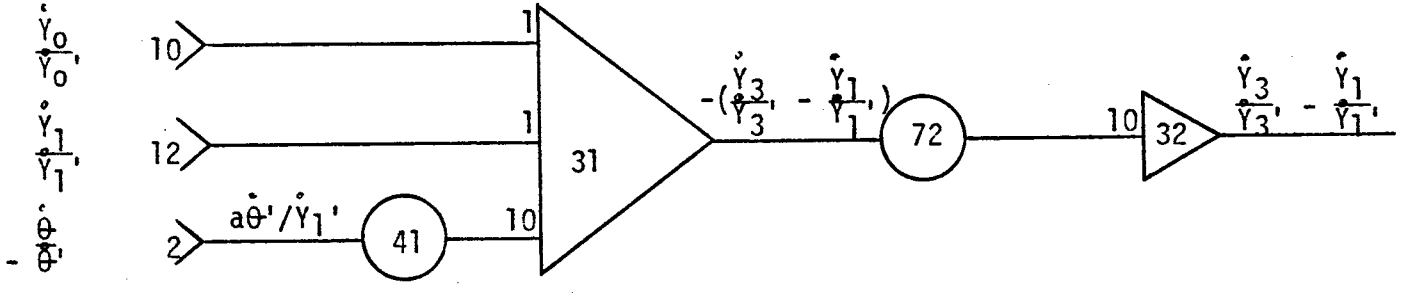

CONSTANT REAR DAMPER

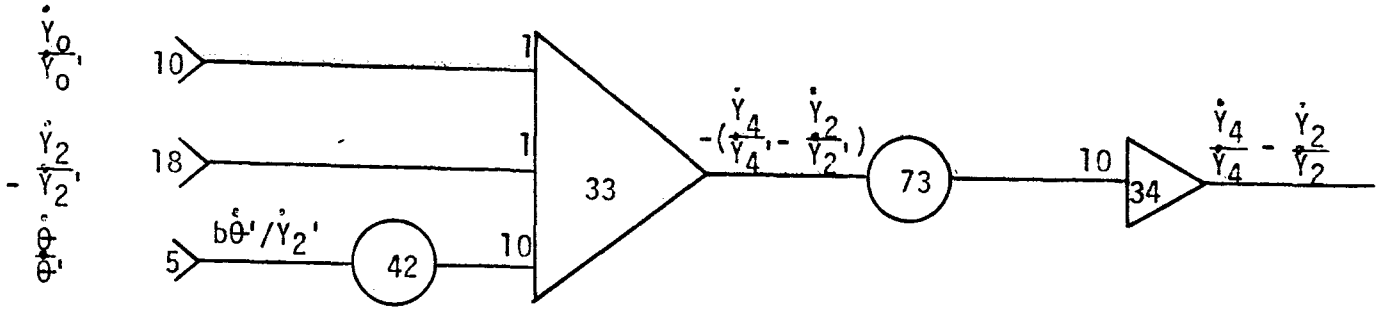

SHUTTLE DYNAMICS

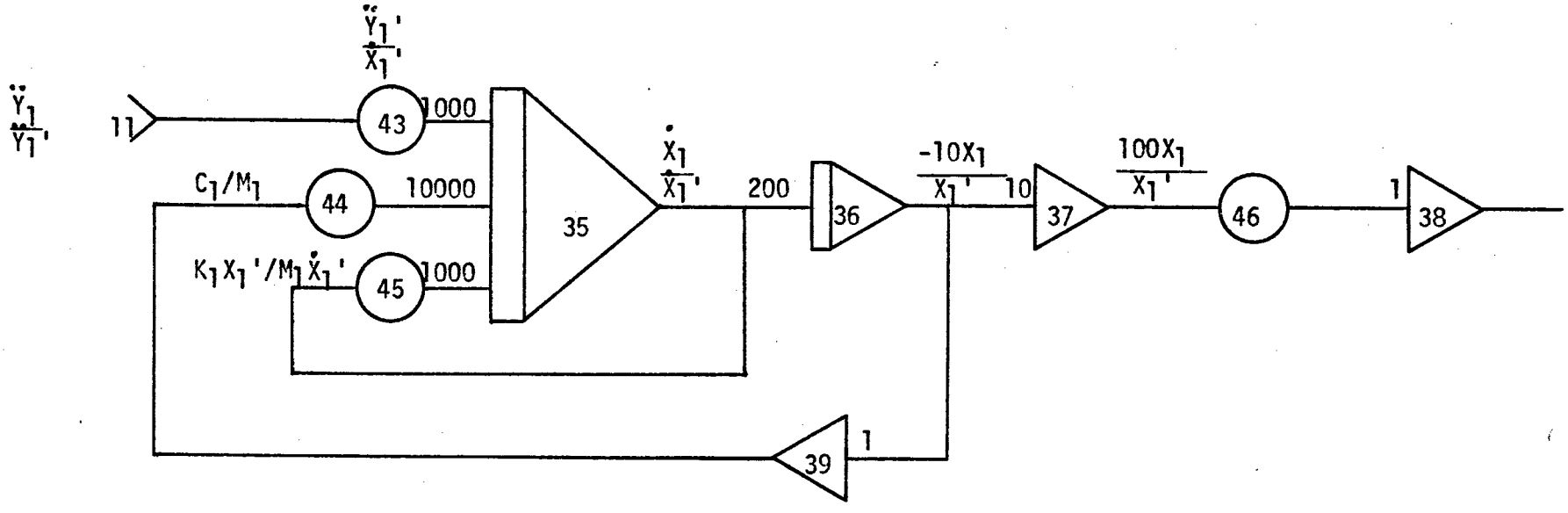

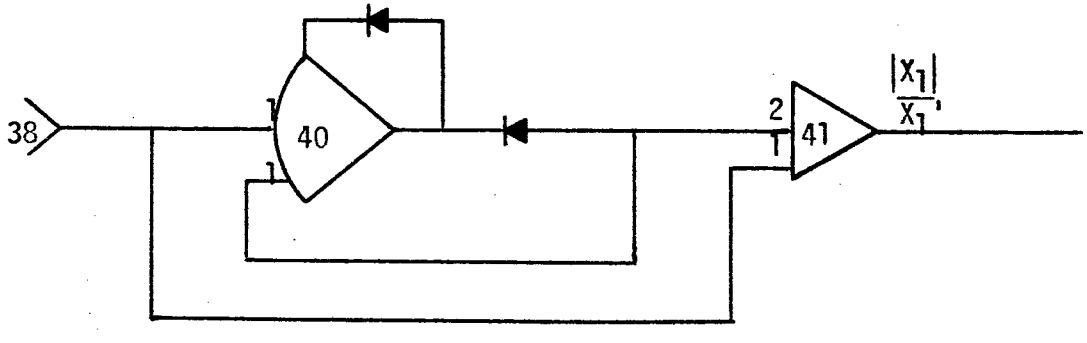

CONTROL SIGNALS

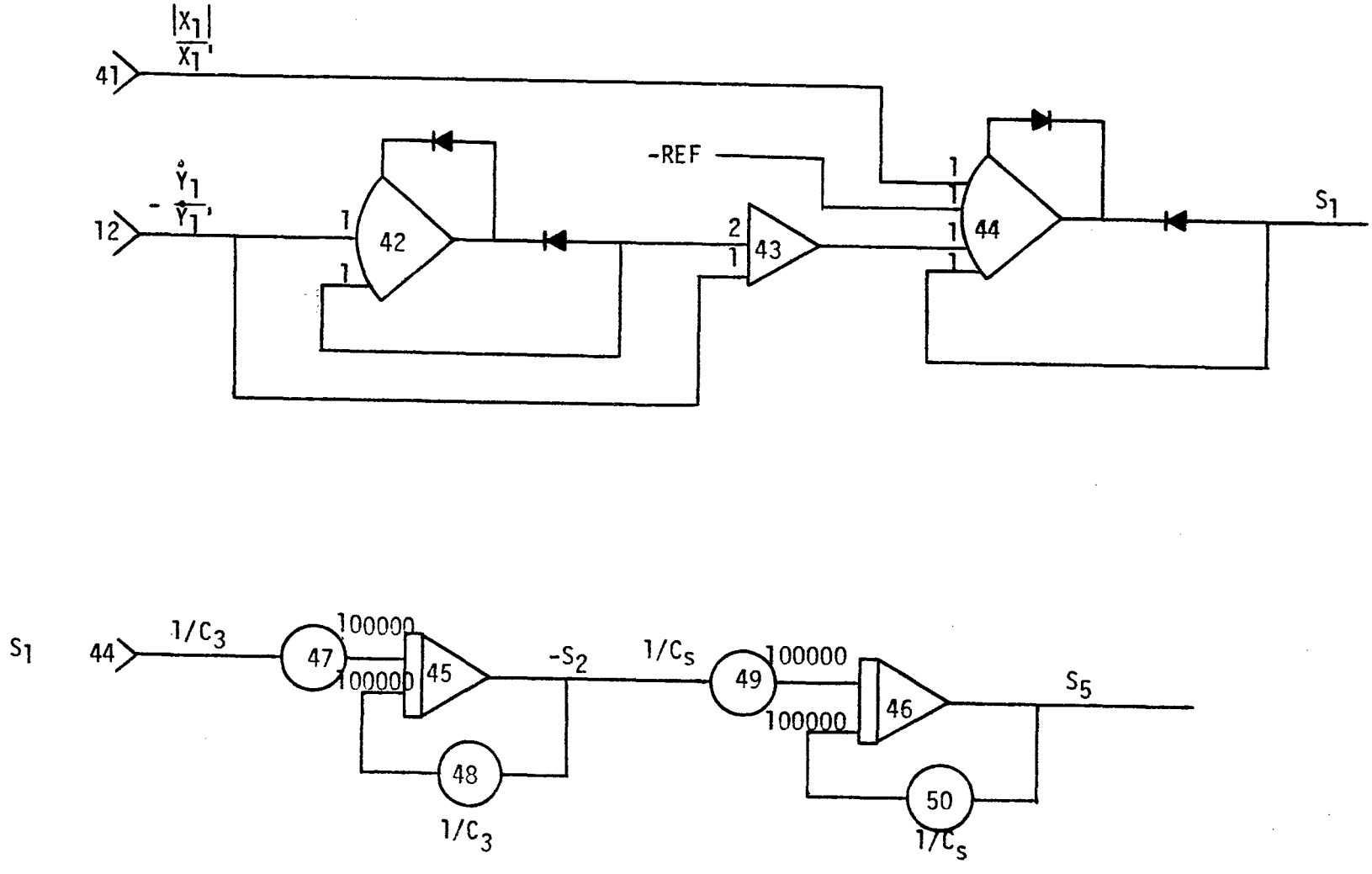

VORTEX AND SECONDARY BLOW-OFF VALVE MODELS

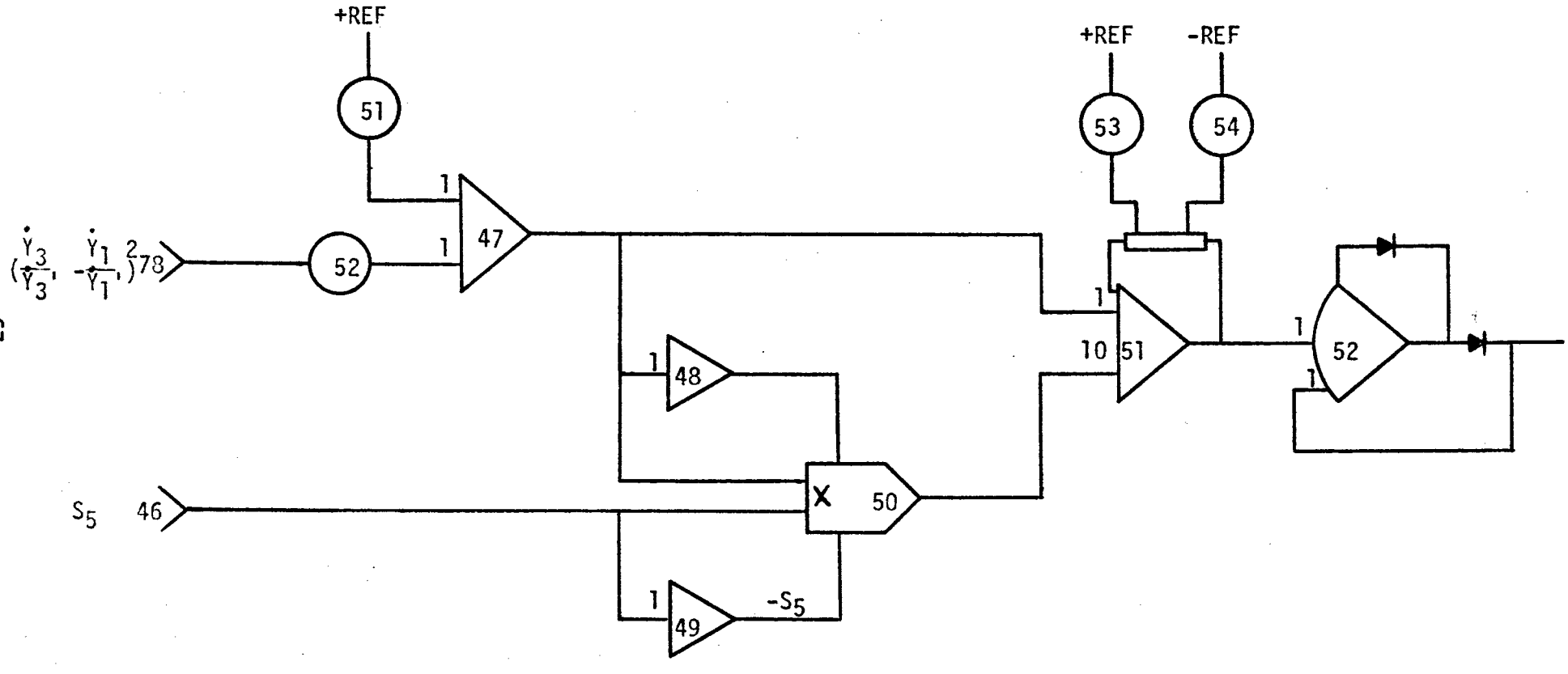

FORCE OUTPUT FROM FRONT ADAPTIVE FLUIDIC VIBRATION

DAMPER CONCEPT

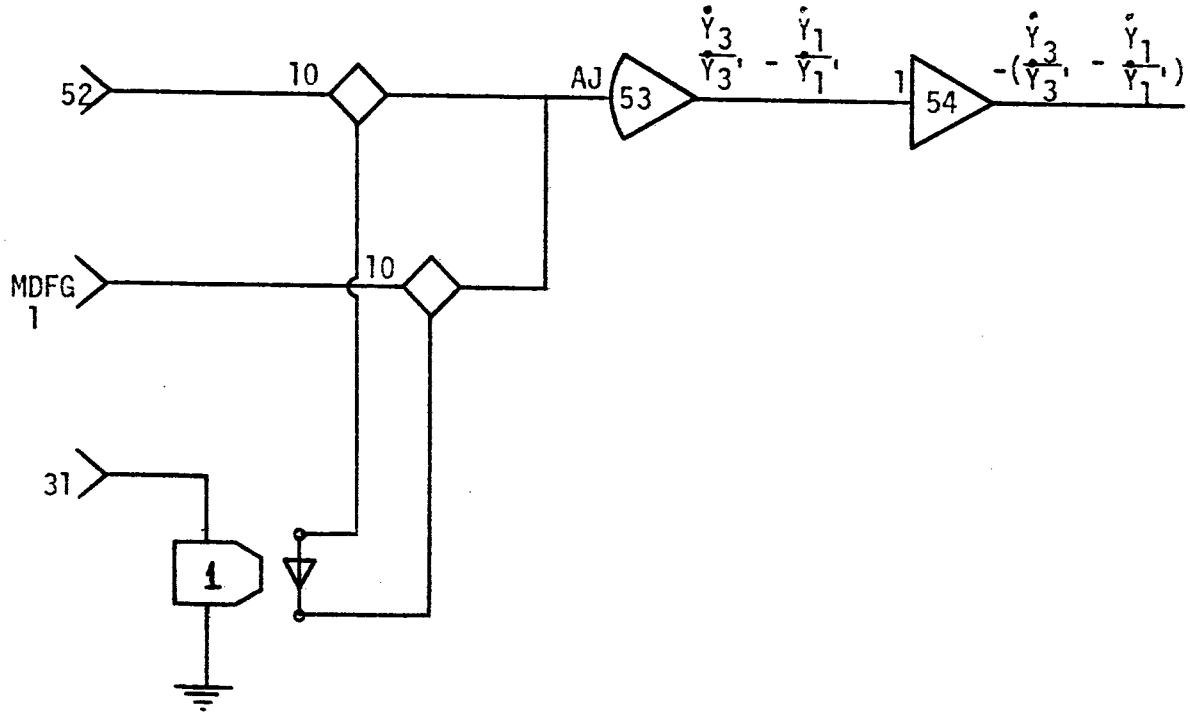

MOD II AND MOD IIB FRONT DAMPER CONTROL SIGNAL

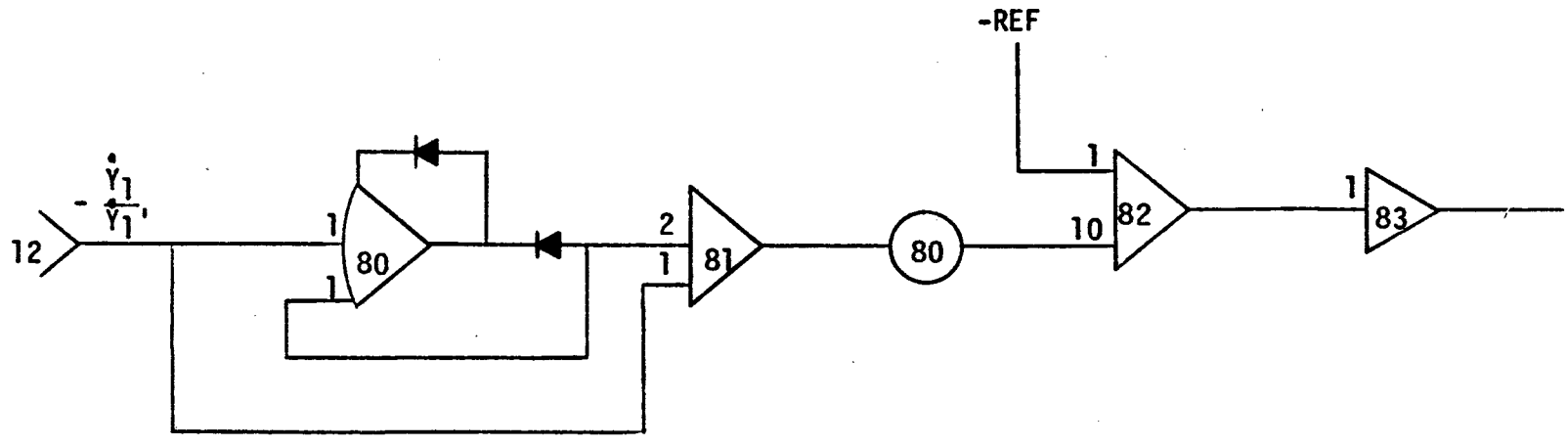

MOD III FRONT DAMPER CIRCUIT

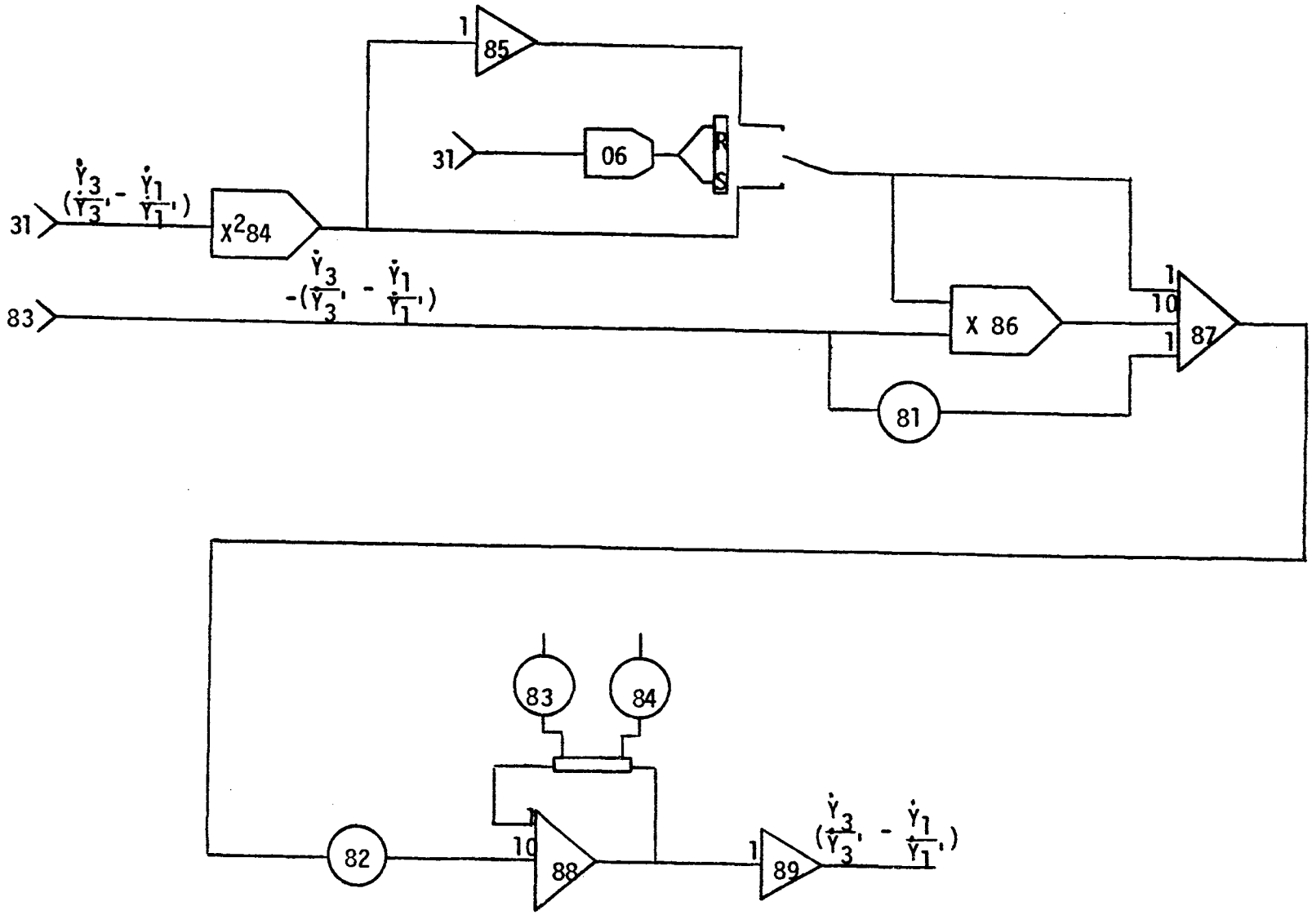

MOD III REAR DAMPER CIRCUIT

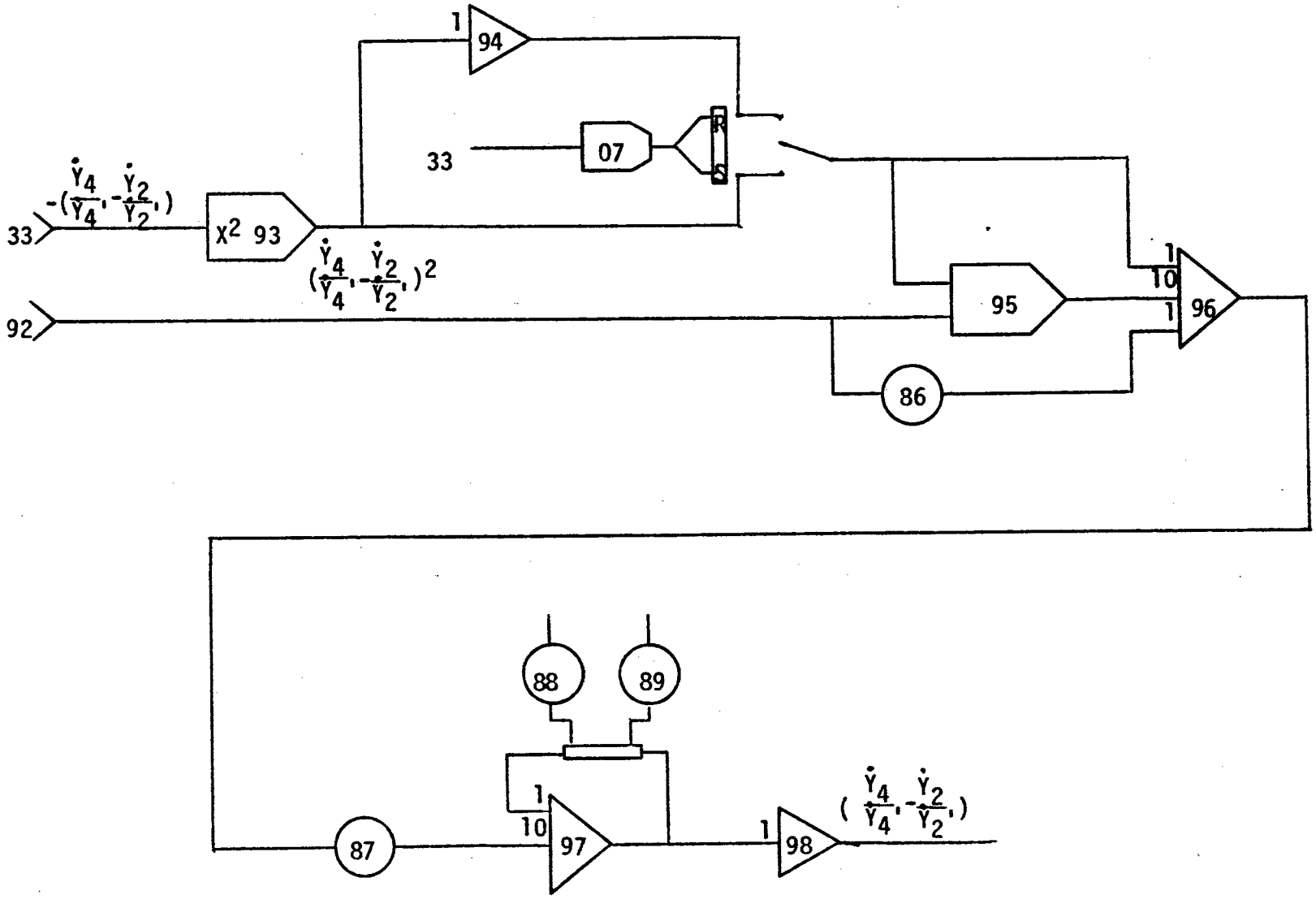

APPENDIX C

FORTRAN DIGITAL/HYBRID PROGRAM

FORTRAN DIGITAL/HYBRID PROGRAM

The analog computer simulation of this system was controlled and monitored by the digital computer through execution of a specially created FORTRAN IV program. Utilizing the Hybrid Linkage Subroutine package, the digital program controlled the analog modes, control line states and pot settings while monitoring the values of various system parameters to establish a true hybrid system. Complementing the digital and analog computers of the hybrid system were an additional digital and analog computer. The computer system configuration is illustrated in Figure C-1.

The digital program is written so it will accept the vehicle data in either an interrogative manner or though paper tape input. The first statement generated by the program to the system teletype allows the user to make this choice. If the teletype is chosen for data input, the program identifies the parameters desired and an input grid is printed to facilitate proper spacing of the input values. This mode of data input is desirable when the vehicle parameters are being continuously altered. A sample input procedure is given in Figure C-2.

If the vehicle parameters are to remain constant through several runs then the choice of paper tape as the input medium is desirable. The vehicle parameters are typed onto paper tape and loaded into the high speed reader prior to each initialization of the program. Following this procedure the test identification parameters are input via the interrogative mode as described above. (See the second page of Figure C-2).

After completion of the input process the digital portion of the hybrid system sets the appropriate pots and control lines then switches the analog mode from pot set to operate. While the analog is in the operate mode, the digital program continuously monitors the terrain signal via the analog to digital converter and then, after the appropriate delay, outputs the same signal to the rear wheel through the digital to analog converter. During each run, the absorbed power, and front and rear wheel velocities and accelerations are sampled numerous times. From these samples the average absorbed power and maximum wheel velocities and accelerations are determined.

At the completion of the initial run the damper energies are read and the analog mode is then switched to pot set. The pots are then changed from the empty vehicle configuration values to the loaded configuration and the run is made as for the empty case. Upon completion of this run the user can choose to rerun without changing any parameters, change only the terrain parameters, repeat the entire input process or terminate the test.

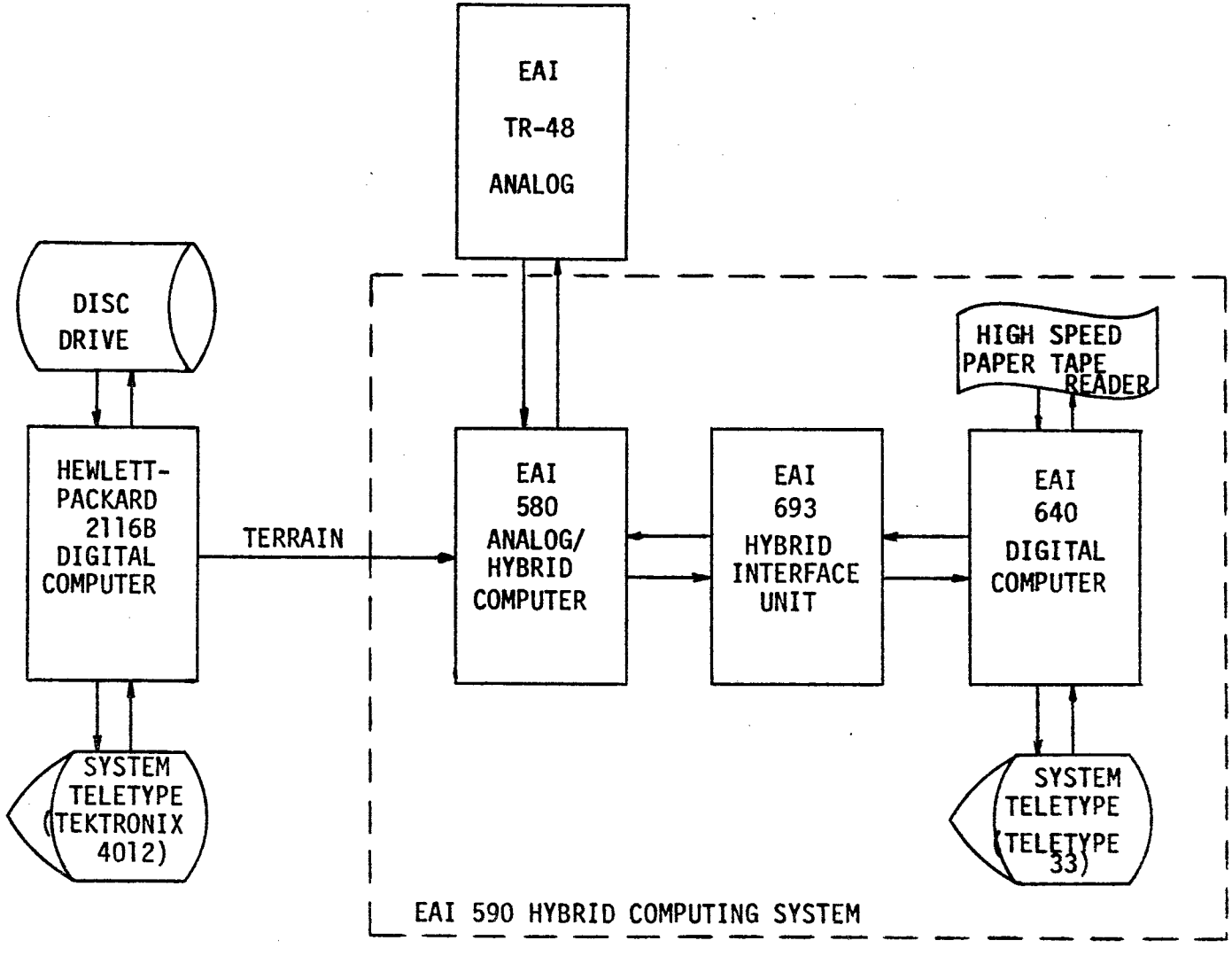

COMPUTER SYSTEM CONFIGURATION

FIGURE C-1

```
    1-TELETYPE OR 2-HS PAPER TAPE
1
 INPUT THE SCALE FACTORS FOR THE A TO D CHANNELS
  UNITS ARE FT/V, WATTS/V, FT/SEC/V, FT/SEC**2/V, LB-FT/V
-----.----X-----.----X-----.----X-----.----X-----.----X
    0.1        10.0        2.0        80.425  20000.0


 INPUT THE FOLLOWING VEHICLE PARAMETERS:

  WHEEL BASE, FRONT UNSPRUNG MASS AND REAR UNSPRUNG MASS
-----.----X-----.----X-----.----X
    7.08       3.576      2.799
  FRONT AND REAR TIRE SPRING RATES AND FRONT AND REAR
    SUSPENSION SPRING RATES
-----.----X-----.----X-----.----X-----.----X
 8000.0    11000.0     1716.0     1728.0
  FRONT AND REAR TIRE DAMPING AND FRONT AND REAR
    SUSPENSION DAMPING
-----.----X-----.----X-----.----X-----.----X
    7.9        8.3       166.0      178.0


 INPUT THE FOLLOWING MAXIMUM VALUES:

  CENTER OF GRAVITY DISPLACEMENT, VELOCITY AND ACCELERATION
-----.----X-----.----X-----.----X
    1.0       20.0       128.0
  FRONT WHEEL DISPLACEMENT, VELOCITY AND ACCELERATION
    SIMILARLY FOR THE REAR WHEEL
-----.----X-----.----X-----.----X-----.----X-----.----X-----.----X
    1.0       20.0       804.25       1.0       20.0       804.25
  PITCH DISPLACEMENT, VELOCITY AND ACCELERATION
-----.----X-----.----X-----.----X
    0.5       10.0       20.0
  FRONT HULL DISPLACEMENT AND VELOCITY
    SIMILARLY FOR REAR HULL
-----.----X-----.----X-----.----X-----.----X
    1.0       20.0        1.0       20.0
  TERRAIN DISPLACEMENTS, FRONT AND REAR
-----.----X-----.----X
    1.0        1.0


 INPUT PARAMETERS FOR AN EMPTY VEHICLE:

  SPRUNG MASS, MOMENT OF INERTIA, CENTER OF GRAVITY TO
    THE FRONT AXLE, REAR AXLE AND DRIVERS SEAT
-----.----X-----.----X-----.----X-----.----X-----.----X
   29.68     216.47       2.27       4.81       0.881


 INPUT PARAMETERS FOR A LOADED VEHICLE:

  SPRUNG MASS, MOMENT OF INERTIA, CENTER OF GRAVITY TO
    THE FRONT AXLE, REAR AXLE AND DRIVERS SEAT
-----.----X-----.----X-----.----X-----.----X-----.----X
   42.135    359.5        3.692      3.392      0.54
```

```
 INPUT THE NUMBER OF ITERATIONS DESIRED
  ONE ITERATION IS 2*(WHEEL BASE) OF TERRAIN
---
200
  ENTER RUN ID: TERRAIN ID, VELOCITY AND SCALE
AAAAAAAAAAAAX-----.----X-----.----X
SAMPLE NO. 1     30.0          0.2
```

```
      DIMENSION AM0(2),AI0(2),A(2),B(2),C(2),PN(31),PS1(13,2),
     1 PS2(18),P(500),Z(2),RM(3),W(2),DEN(2)
      DATA PN(1),PN(2),PN(3),PN(4),PN(5),PN(6),PN(7),PN(8),
     1 PN(9),PN(10),PN(11),PN(12),PN(13),PN(14),PN(15),PN(16),
     2 PN(17),PN(18),PN(19),PN(20),PN(21),PN(22),PN(23),PN(24),
     3 PN(25),PN(26),PN(27),PN(28),PN(29),PN(30),PN(31),PT3,PT4
     4 /4HP036,4HP037,4HP038,
     5 4HP039,4HP045,4HP046,4HP047,
     1 4HP048,4HP073,4HP076,4HP077,4HP078,4HP079,4HP015,4HP016,4HP035,
     2 4HP040,4HP041,4HP042,4HP043,4HP049,4HP060,4HP061,4HP062,
     3 4HP063,4HP065,4HP066,4HP067,4HP069,4HP071,4HP072,4HP020,4HP021/
      CALL QSHYIN(IERR,580)
  303 IVAL=1
      CALL QWLBB(IVAL,IERR)
      TYPE 75
   75 FORMAT(33H  CHOOSE DEVICE FOR INPUT OF DATA,/,
     1 33H     1-TELETYPE OR 2-PS PAPER TAPE,/)
      ACCEPT 76,I
   76 FORMAT(I1)
      IF(I .GT. 1)GO TO 106
      TYPE 1
    1 FORMAT(48H INPUT THE SCALE FACTORS FOR THE A TO D CHANNELS,
     1 /,57H  UNITS ARE FT/V, WATTJ/V, FT/SEC/V, FT/SEC**2/V, LB-FT/V,
     2 /,5(11H-----.----X),/)
      ACCEPT 40,SC1,SC2,SC3,SC4,SC5
      TYPE 5
    5 FORMAT(//40H  INPUT THE FOLLOWING VEHICLE PARAMETERS:,//,
     1 56H  WHEEL BASE, FRONT UNSPRUNG MASS AND REAR UNSPRUNG MASS
     2 ,/,3(11H-----.----X),/)
      ACCEPT 40,WB,AM1,AM2
      TYPE 15
   15 FORMAT(53H  FRONT AND REAR TIRE SPRING RATES AND FRONT AND REAR,
     1 /,27H     SUSPENSION SPRING RATES,/,4(11H-----.----X),/)
      ACCEPT 40,AKF,AKR,AK1,AK2
      TYPE 25
   25 FORMAT(48H  FRONT AND REAR TIRE DAMPING AND FRONT AND REAR,/,
     1 22H     SUSPENSION DAMPING,/,4(11H-----.----X),/)
      ACCEPT 40,DF,DR,D1,D2
      TYPE 30
   30 FORMAT(//36H INPUT THE FOLLOWING MAXIMUM VALUES:,//,
     1 59H  CENTER OF GRAVITY DISPLACEMENT, VELOCITY AND ACCELERATION
     2 ,/,3(11H-----.----X),/)
      ACCEPT 40,Y0M,Y0DM,Y0DDM
      TYPE 35
   35 FORMAT(53H  FRONT WHEEL DISPLACEMENT, VELOCITY AND ACCELERATION,
     1 /,32H     SIMILARLY FOR THE REAR WHEEL,/,6(11H-----.----X),/)
      ACCEPT 40,Y1M,Y1DM,Y1DDM,Y2M,Y2DM,Y2DDM
   40 FORMAT(6(F10.4,1X))
      TYPE 45
   45 FORMAT(47H  PITCH DISPLACEMENT, VELOCITY AND ACCELERATION,/,
     1 3(11H-----.----X),/)
      ACCEPT 40,TM,TDM,TDDM
      TYPE 50
   50 FORMAT(38H  FRONT HULL DISPLACEMENT AND VELOCITY,/,
     1 27H     SIMILARLY FOR REAR HULL,/,4(11H-----.----X),/)
      ACCEPT 40,Y3M,Y3DM,Y4M,Y4DM
```

```
      TYPE 55
   55 FORMAT(39H  TERRAIN DISPLACEMENTS, FRONT AND REAR,/,
     1 2(11H-----.-----X),/)
      ACCEPT 40,YTM,YRM
      TYPE 65
      K=1
   65 FORMAT(//39H INPUT PARAMETERS FOR AN EMPTY VEHICLE:,/)
   13 TYPE 70
   70 FORMAT(54H  SPRUNG MASS, MOMENT OF INERTIA, CENTER OF GRAVITY TO,
     1 /,46H  THE FRONT AXLE, REAR AXLE AND DRIVERS SEAT,/,
     2 5(11H-----.-----X),/)
      ACCEPT 40,AM0(K),AI0(K),A(K),B(K),C(K)
      IF(K .NE. 1)GO TO 3
      TYPE 80
   80 FORMAT(//39H INPUT PARAMETERS FOR A LOADED VEHICLE:,/)
      K=K+1
      GO TO 13
  100 READ(4,40)SC1,SC2,SC3,SC4,SC5
      READ(4,40)WB,AM1,AM2
      READ(4,40)AKF,AKR,AK1,AK2
      READ(4,40)DF,DR,D1,D2
      READ(4,40)Y0M,Y0DM,Y0DDM
      READ(4,40)Y1M,Y1DM,Y1DDM,Y2M,Y2DM,Y2DDM
      READ(4,40)TM,TDM,TDDM
      READ(4,40)Y3M,Y3DM,Y4M,Y4DM
      READ(4,40)YTM,YRM
      DO 10 K=1,2
   10 READ(4,40)AM0(K),AI0(K),A(K),B(K),C(K)
    3 G=32.17
      ZERO=0.0
      PS2(1)=Y0DDM/Y0DM
      PS2(2)=Y0DM/Y0M
      PS2(3)=G/Y0DDM
      PS2(4)=TDDM/TDM
      PS2(5)=TDM/TM
      PS2(6)=AK2*Y4M/(AM2*Y2DDM)
      PS2(7)=AKR*YRM/(AM2*Y2DDM)
      PS2(8)=D2*Y4DM/(AM2*Y2DDM)
      PS2(9)=AK1*Y3M/(AM1*Y1DDM)
      PS2(10)=AKF*Y1M/(AM1*Y1DDM)
      PS2(11)=D1*Y3DM/(AM1*Y1DDM)
      PS2(12)=G/Y1DDM
      PS2(13)=DF*Y1DM/(AM1*Y1DDM)
      PS2(14)=Y1DDM/Y1DM
      PS2(15)=Y1DM/Y1M
      PS2(16)=DR*Y2DM/(AM2*Y2DDM)
      PS2(17)=Y2DDM/Y2DM
      PS2(18)=Y2DM/Y2M
      DO 23 J=1,2
      PS1(1,J)=D1*Y1DM/(AM0(J)*Y0DDM)
      PS1(2,J)=D2*Y2DM/(AM0(J)*Y0DDM)
      PS1(3,J)=AK1*Y1M/(AM0(J)*Y0DDM)
      PS1(6,J)=B(J)*D2*Y2DM/(AI0(J)*TDDM)
      PS1(4,J)=AK2*Y2M/(AM0(J)*Y0DDM)
      PS1(5,J)=A(J)*D1*Y1DM/(AI0(J)*TDDM)
      PS1(7,J)=A(J)*AK1*Y1M/(AI0(J)*TDDM)
      PS1(8,J)=B(J)*AK2*Y2M/(AI0(J)*TDDM)
      PS1(9,J)=A(J)*TM/Y3M
```

```
      PS1(12,J)=A(J)*TDM/Y3DM
      PS1(10,J)=B(J)*TM/Y4M
      PS1(11,J)=B(J)*TDM/Y2DM
   23 PS1(13,J)=C(J)*TDDM/Y0DDM
      WRITE(6,2)
    2 FORMAT(1H1//7,6X,3HPOT,6X,11HCOEFFICIENT,5X,11HPOT SETTING,
     1 4X,12HGAIN (10**K),//)
      DO 33 J=1,18
      VAL=PS2(J)
      K=0
   43 VAL2=PS2(J)/10.0**K
      IF(VAL2 .LT. 1.0)GO TO 53
      K=K+1
      GO TO 43
   53 PS2(J)=VAL2
      LK=J+13
      CALL QWPR(PN(LK),PS2(J),IERR)
      GO TO (500,501,500,502,503),IERR
  500 WRITE(6,12)PN(LK),VAL,VAL2,K
   12 FORMAT(5X,A4,5X,F10.4,8X,F8.4,10X,I4,/)
   33 CONTINUE
      DO 63 J=1,13
      VAL=PS1(J,1)
      VAL1=PS1(J,2)
      DO 73 I=1,2
      K=0
   83 VAL2=PS1(J,I)/10.0**K
      IF(VAL2 .LT. 1.0)GO TO 93
      K=K+1
      GO TO 83
   93 PS1(J,I)=VAL2
      IF(I .EQ. 1)K77=K
   73 CONTINUE
      K78=K77-K
      IF(K78)109,99,119
  109 PS1(J,1)=PS1(J,1)/10.0**(-K78)
      K77=K
      GO TO 99
  119 PS1(J,2)=PS1(J,2)/10.0**K78
      K=K77
   99 WRITE(6,32)PN(J),VAL,PS1(J,1),K77
      WRITE(6,52)PN(J),VAL1,PS1(J,2),K
   52 FORMAT(5X,A4,5X,F10.4,8X,F8.4,10X,I4,8X,6HLOADED,/)
   32 FORMAT(5X,A4,5X,F10.4,8X,F8.4,10X,I4,8X,5HEMPTY,/)
   63 CONTINUE
  301 TYPE 339
  339 FORMAT(39H INPUT THE NUMBER OF ITERATIONS DESIRED,/,
     1 44H  ONE ITERATION IS 2*(WHEEL BASE) OF TERRAIN,/,
     2 3H---,/)
      ACCEPT 349,M
  349 FORMAT(I3)
      ALEN=FLOAT(M)*2.0*WB
  302 TYPE 95
   95 FORMAT(46H  ENTER RUN ID/ TERRAIN ID, VELOCITY AND SCALE
     1 ,/,13HAAAAAAAAAAAAAX,2(11H-----.----X),/)
      ACCEPT 975,RM(1),RM(2),RM(3),VEL1,SCF2
  975 FORMAT(3A4,1X,F10.4,1X,F10.4)
      GA=SCF2/YTM
```

```
      CALL QWPR(PT3,GA,IERR)
      GO TO (612,501,612,502,503),IERR
  612 CALL QWPR(PT4,GA,IERR)
      GO TO (613,501,613,502,503),IERR
  613 VEL=88.0*VEL1/50.0
      TIME=ALEN/VEL
      WRITE(6,622)RM(1),RM(2),RM(3),VEL1,ALEN,TIME
      NP=140.0*WB/VEL-1.0
      NP1=NP+1
      NP2=NP*2
      JVAL=-32767
      DO 399 JIK=1,2
      DO 389 JJJ=1,13
      CALL QWPR(PN(JJJ),PS1(JJJ,JIK),IERR)
      GO TO(389,501,389,502,503),IERR
  389 CONTINUE
      CALL QSOP(IERR)
      CALL QSDLY(2000)
      AVGP=0.0
      NMN=0
      CVMN=0.0
      CVMX=0.0
      WHAC=0.0
      CVM2=0.0
      CVMX2=0.0
      WH2=0.0
      FRIN=1.0/(480.0*SCF2*YTM)
      DO 205 J=1,NP
  205 R(J)=0.0
  391 CALL QRBADR(TERB,2,1,IERR)
      IF(ABS(TERB) .GT. FRIN)GO TO 391
      CALL QWLBB(JVAL,IERR)
      SUM=0.0
  207 DO 210 I=NP1,NP2
      I1=I-NP
      CALL QRBADR(Z,4,2,IERR)
      CALL QRBADR(W,8,2,IERR)
      IF(Z(1) .GT. CVMX)CVMX=Z(1)
      IF(Z(1) .LT. CVMN)CVMN=Z(1)
      IF(Z(2) .GT. WHAC)WHAC=Z(2)
      IF(W(1) .LT. CVM2)CVM2=W(1)
      IF(W(1) .GT. CVMX2)CVMX2=W(1)
      IF(W(2) .GT. WH2)WH2=W(2)
      CALL QWJDAR(R(I1),1,IERR)
      CALL QRBADR(R(I),2,1,IERR)
  210 CALL QSDLY(4)
      CALL QRBADR(AD,1,1,IERR)
      SUM=SUM+AD
      DO 215 I=1,NP
      I1=NP+I
      CALL QRBADR(Z,4,2,IERR)
      CALL QRBADR(W,8,2,IERR)
      IF(Z(1) .LT. CVMN)CVMN=Z(1)
      IF(Z(1) .GT. CVMX)CVMX=Z(1)
      IF(Z(2) .GT. WHAC)WHAC=Z(2)
      IF(W(1) .LT. CVM2)CVM2=W(1)
      IF(W(1) .GT. CVMX2)CVMX2=W(1)
      IF(W(2) .GT. WH2)WH2=W(2)
```

```
      CALL QWJDAR(R(I1),1,IERR)
      CALL QRBADR(R(I),2,1,IERR)
  215 CALL QSDLY(4)
      CALL QRBADR(A9,3,1,IERR)
      AVGP=AVGP+A9
      CALL QRBADR(AD,1,1,IERR)
      SUM=SUM+AD
      NMN=NMN+1
      IF(NMN .LE. M)GO TO 207
      CALL QRBADR(DEN,6,2,IERR)
      CALL QWLBB(IVAL,IERR)
      CALL QWJDAR(ZERO,1,IERR)
      CALL QSSP(IERR)
      JVAL=-16383
      RMS5=60.0*SUM*SC1/FLOAT(M)
      ABSPO=AVGP/FLOAT(M)*10.0*SC2
      DEN(1)=DEN(1)*10.0*SC5
      DEN(2)=DEN(2)*10.0*SC5
      DENT1=DEN(1)/TIME
      DENT2=DEN(2)/TIME
      CVMX=CVMX*10.0*SC3
      CVMN=CVMN*10.0*SC3
      WHAC=WHAC*10.0*SC4
      CVM2=CVM2*10.0*SC3
      CVMX2=CVMX2*10.0*SC3
      WH2=WH2*10.0*SC4
      IF(JIK .EQ. 2)GO TO 611
  622 FORMAT(1H1///,5X,24HRUN ID ---  TERRAIN ID  ,3A4,6H  VEL=,
     1 F8.3,4H MPH,/,9X,4HOVER,F9.2,19H FEET OF TERRAIN IN,F9.3,
     2 8H SECONDS,/)
      WRITE(6,666)
  666 FORMAT(///,10X,13HEMPTY VEHICLE,/)
      GO TO 337
  611 WRITE(6,621)
  621 FORMAT(///,10X,14HLOADED VEHICLE,/)
  337 WRITE(6,300)RMS5,ABSPO,DEN(1),DENT1,DEN(2),DENT2
     1 ,CVMX,CVMN,CVMX2,CVM2,WHAC,WH2
  300 FORMAT(//10X,15HCALCULATED RMS=,F15.3,7H INCHES,/,
     1 10X,15HABSORBED POWER=,F15.5,6H WATTS,/,
     2 10X,22HDAMPER ENERGY (FRONT)=,F15.5,9H FT-LB  =,F15.5,
     3 10H FT-LB/SEC,/,25X,7H(REAR)=,F15.5,
     4 9H FT-LB  =,F15.5,10H FT-LB/SEC,/,
     5 10X,35HMAXIMUM CLOSING VELOCITY (FRONT)+ =,F15.5,
     6 7H FT/SEC,/,42X,3H- =,F15.5,7H FT/SEC,/,
     7 10X,34HMAXIMUM CLOSING VELOCITY (REAR)+ =,F15.5,
     8 7H FT/SEC,/,41X,3H- =,F15.5,7H FT/SEC,/,
     9 10X,35HMAXIMUM WHEEL ACCELERATION (FRONT)=,F15.5,
     1 10H FT/SEC**2,/,38X,7H(REAR)=,F15.5,10H FT/SEC**2,/)
  399 CONTINUE
      GO TO 319
  501 TYPE 511
  511 FORMAT(19HREAL VALUE OVERFLOW,/)
      GO TO 319
  502 TYPE 512
  512 FORMAT(16HPOT NULL FAILURE,/)
      GO TO 319
  503 TYPE 513
  513 FORMAT(19HILLEGAL POT ADDRESS,/)
```

```
319 TYPE 305
305 FORMAT(38HENTER: (1)TO RUN WITH SAME PARAMETERS,,/,
   1 29H(2)TO ALTER THE TERRAIN ONLY,,/,
   2 29H(3)TO ALTER ALL PARAMETERS OR,/,15H(4)TO TERMINATE,/)
    ACCEPT 307,I2
307 FORMAT(I1)
    GO TO (301,302,303,304),I2
304 STOP
    END
```

APPENDIX D

GRAPHS

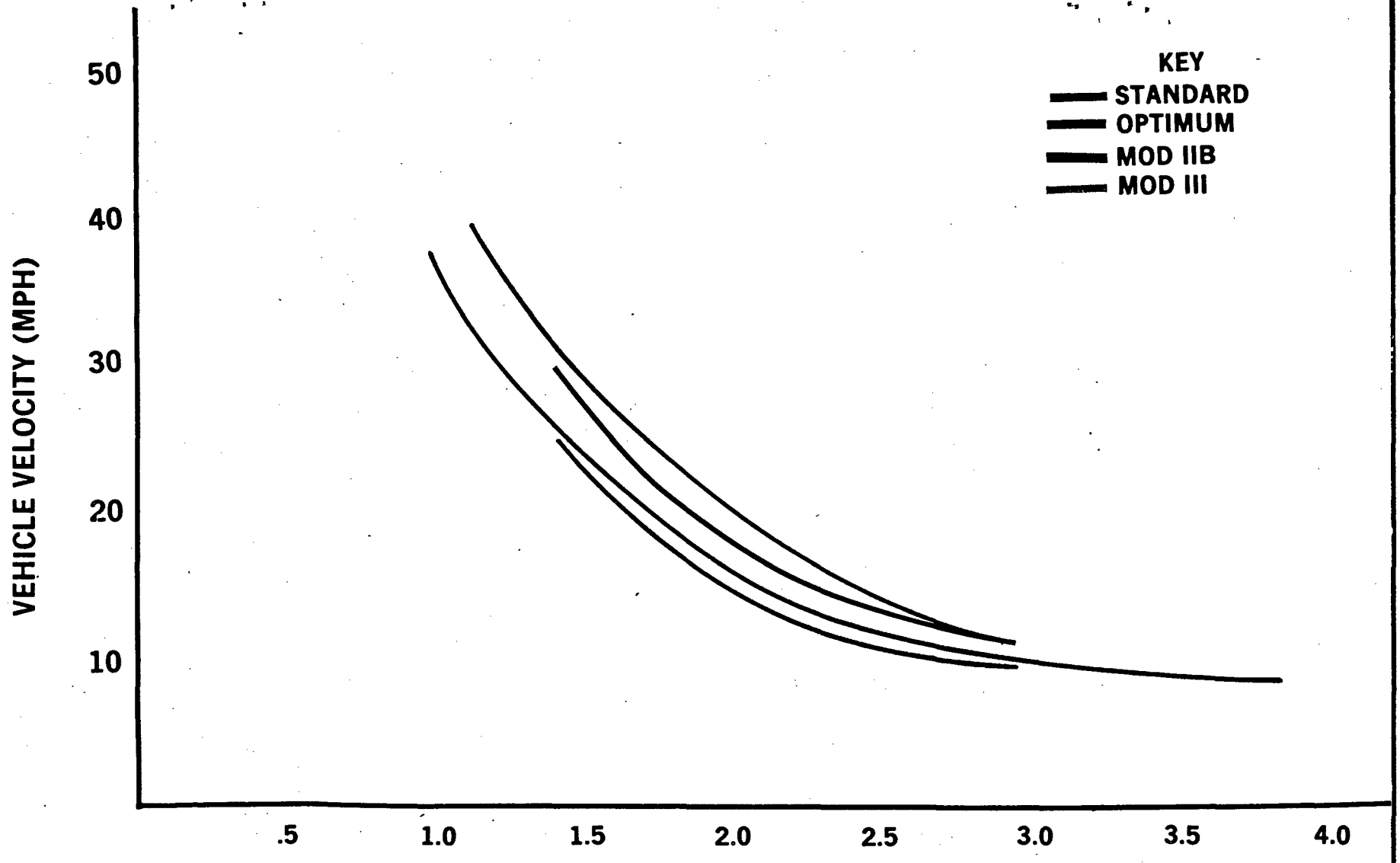

TERRAIN RMS (INCHES)

CONSTANT 6 WATT LEVEL FOR THE EMPTY VEHICLE

FIGURE D-1

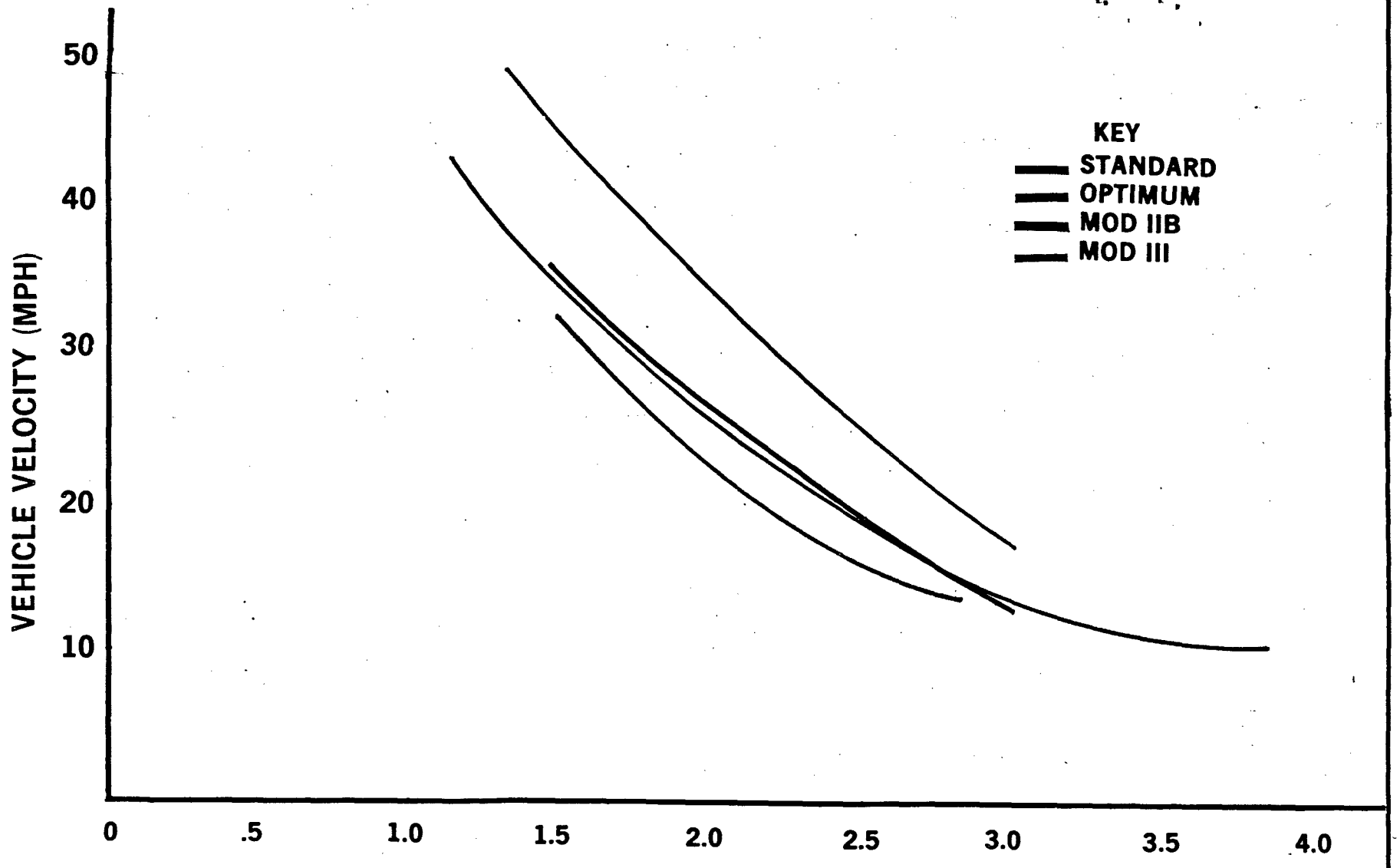

TERRAIN RMS (INCHES)

CONSTANT 6 WATT LEVEL FOR THE LOADED VEHICLE

FIGURE D-2

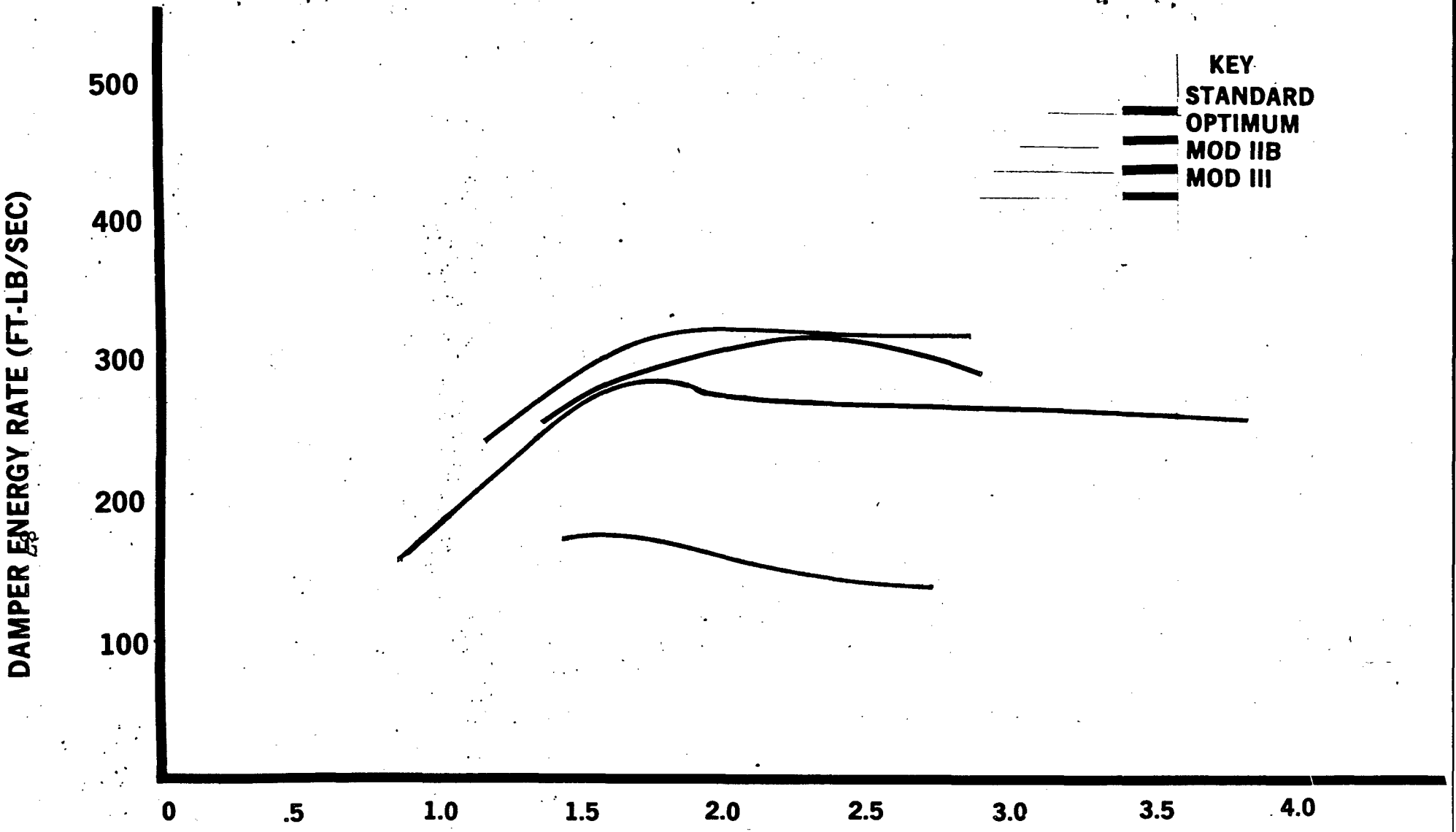

TERRAIN RMS (INCHES)
CONSTANT 6 WATT LEVEL EMPTY VEHICLE

FIGURE D-3

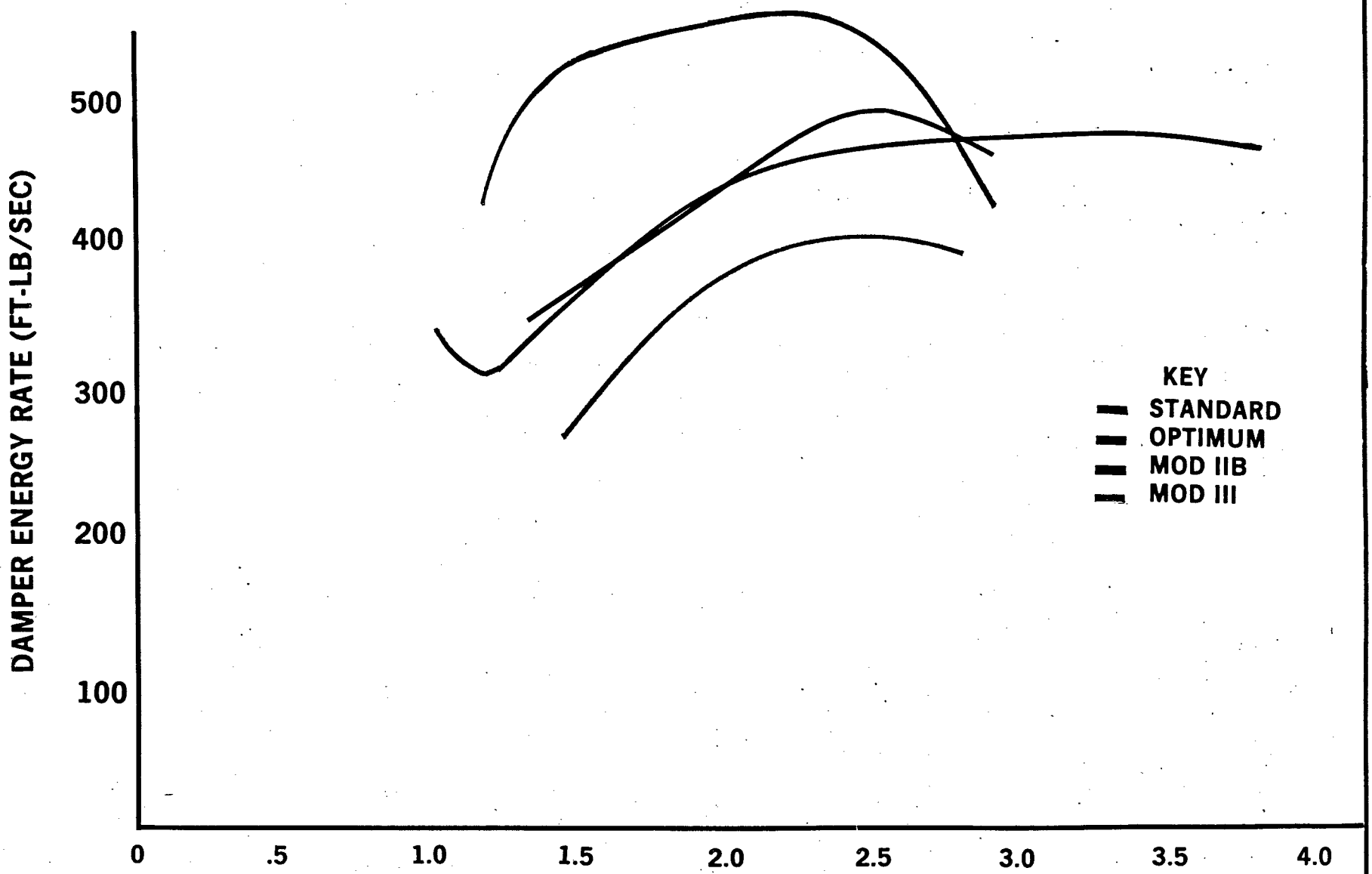

TERRAIN RMS (INCHES)
CONSTANT 6 WATT LEVEL LOADED VEHICLE

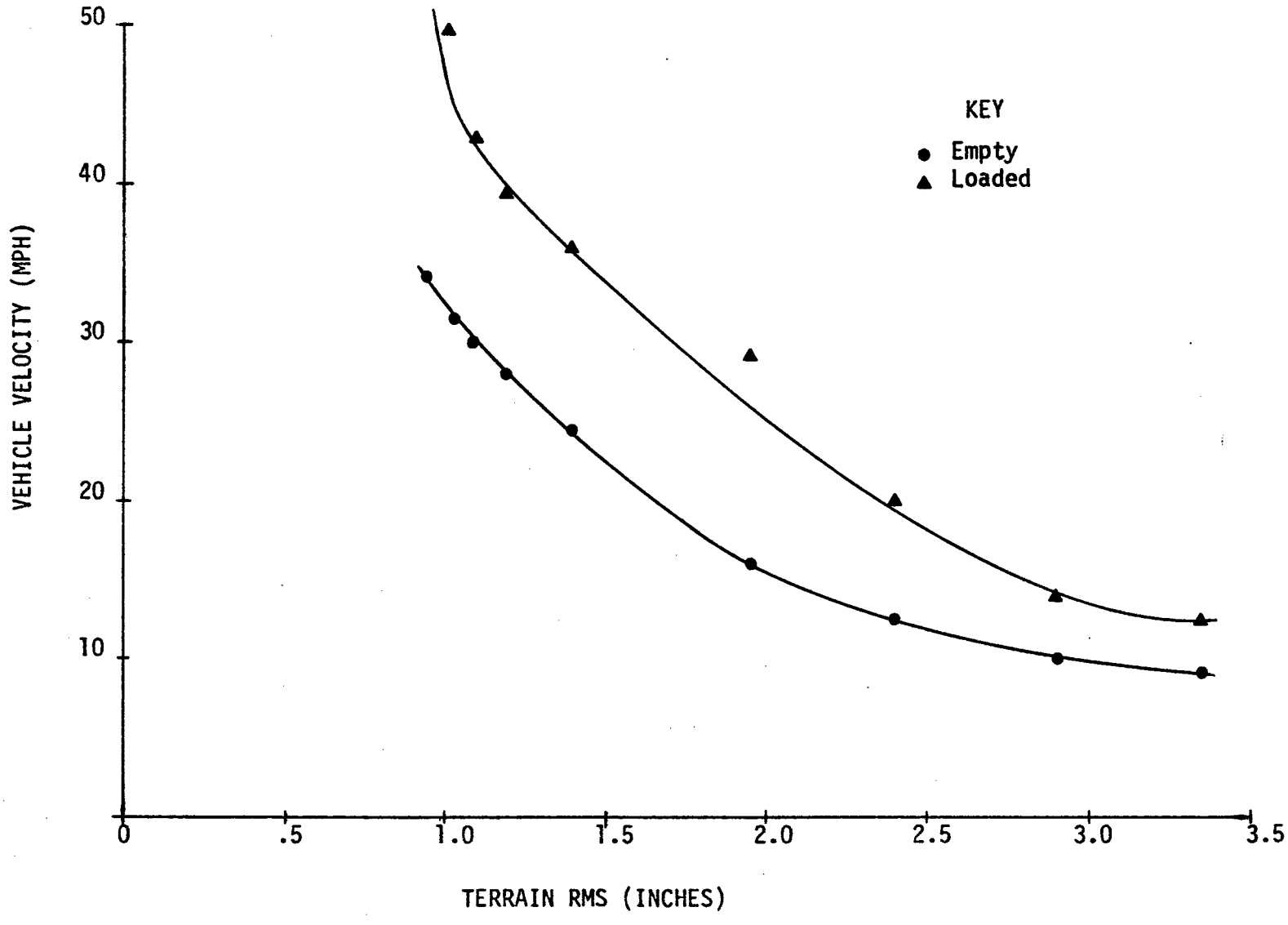

CONSTANT 6 WATT LEVEL - ADAPTIVE VIBRATION DAMPER

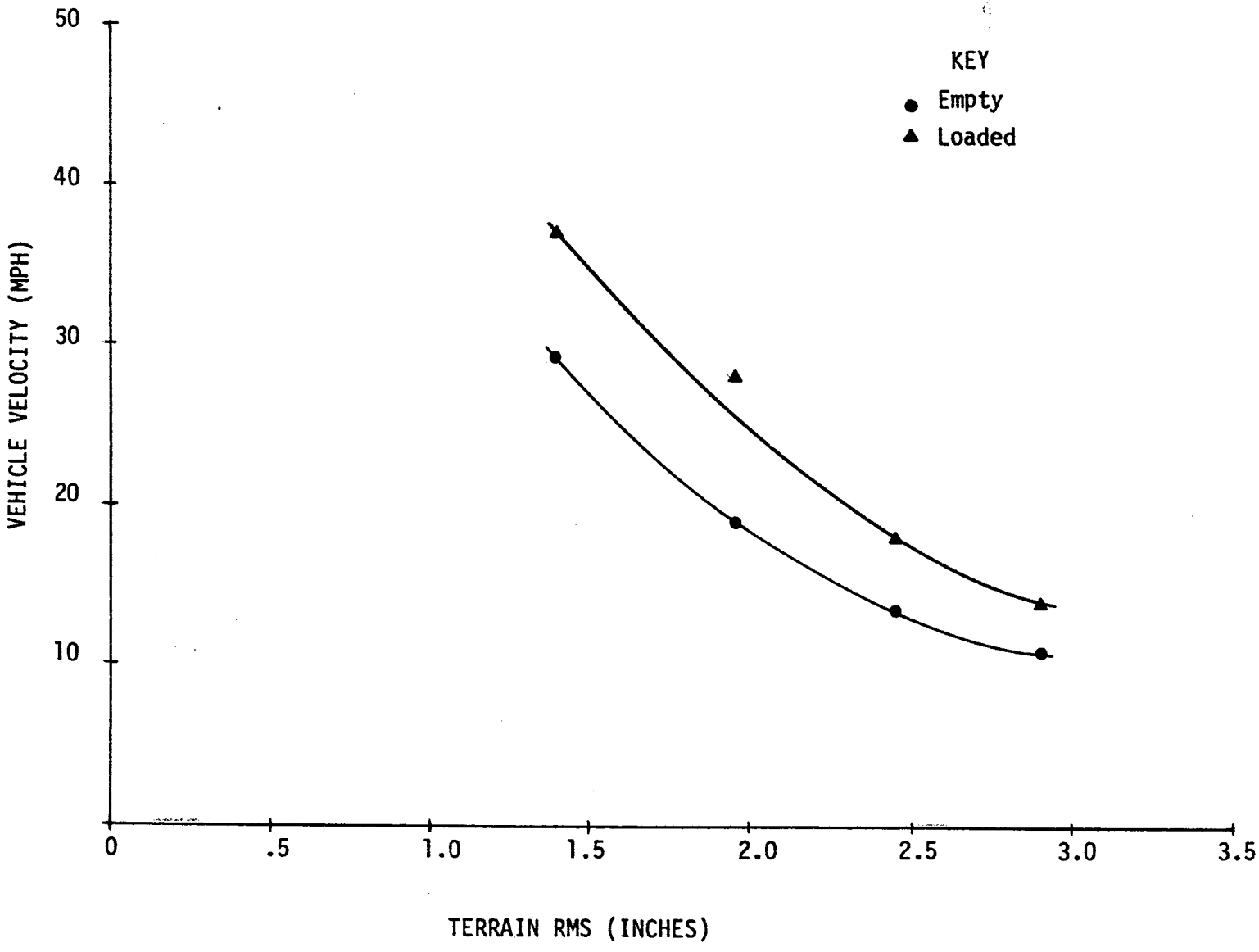

CONSTANT 6 WATT LEVEL - ADAPTIVE VIBRATION DAMPER MOD I

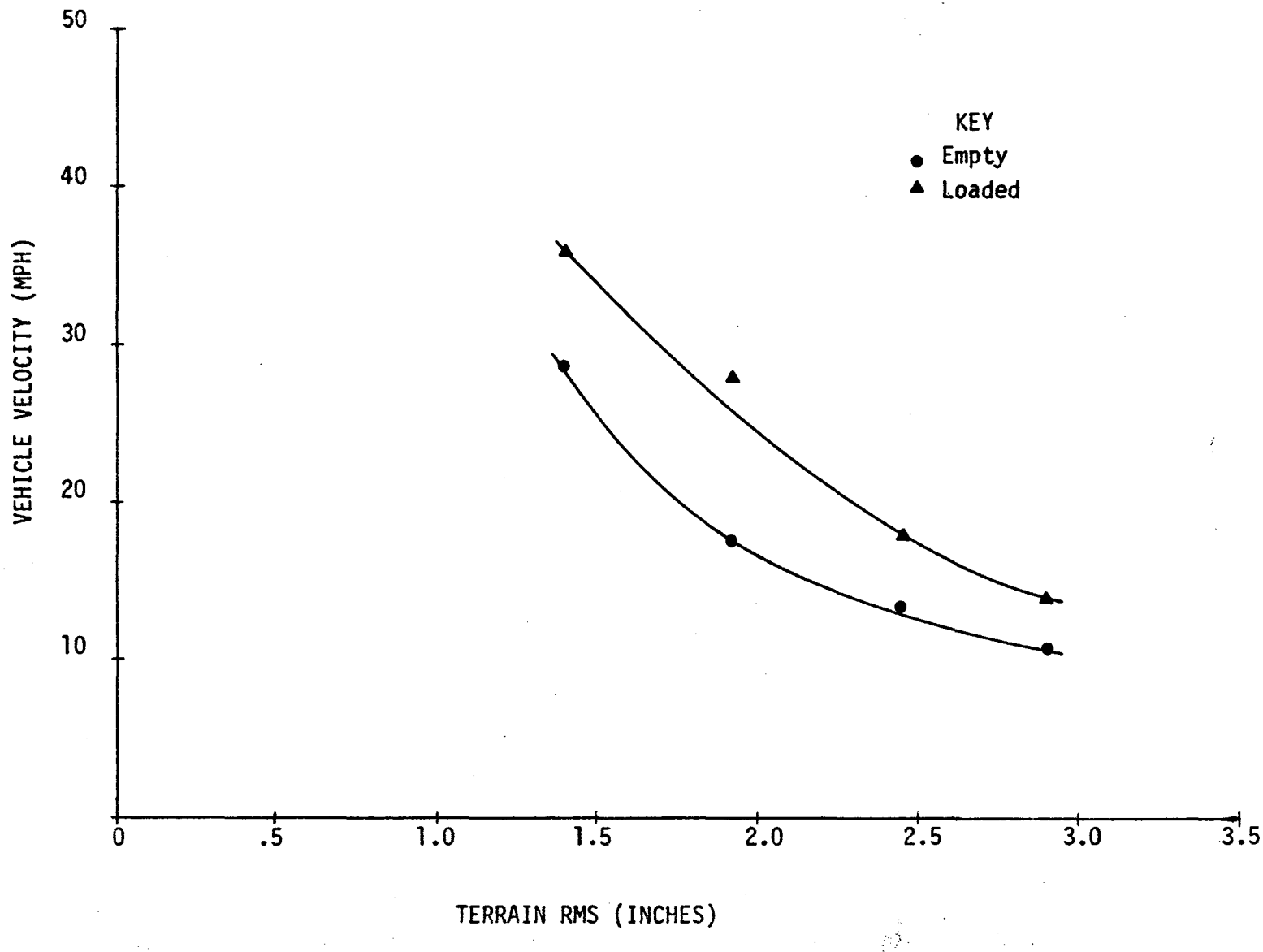

CONSTANT 6 WATT LEVEL - ADAPTIVE VIBRATION DAMPER MOD II

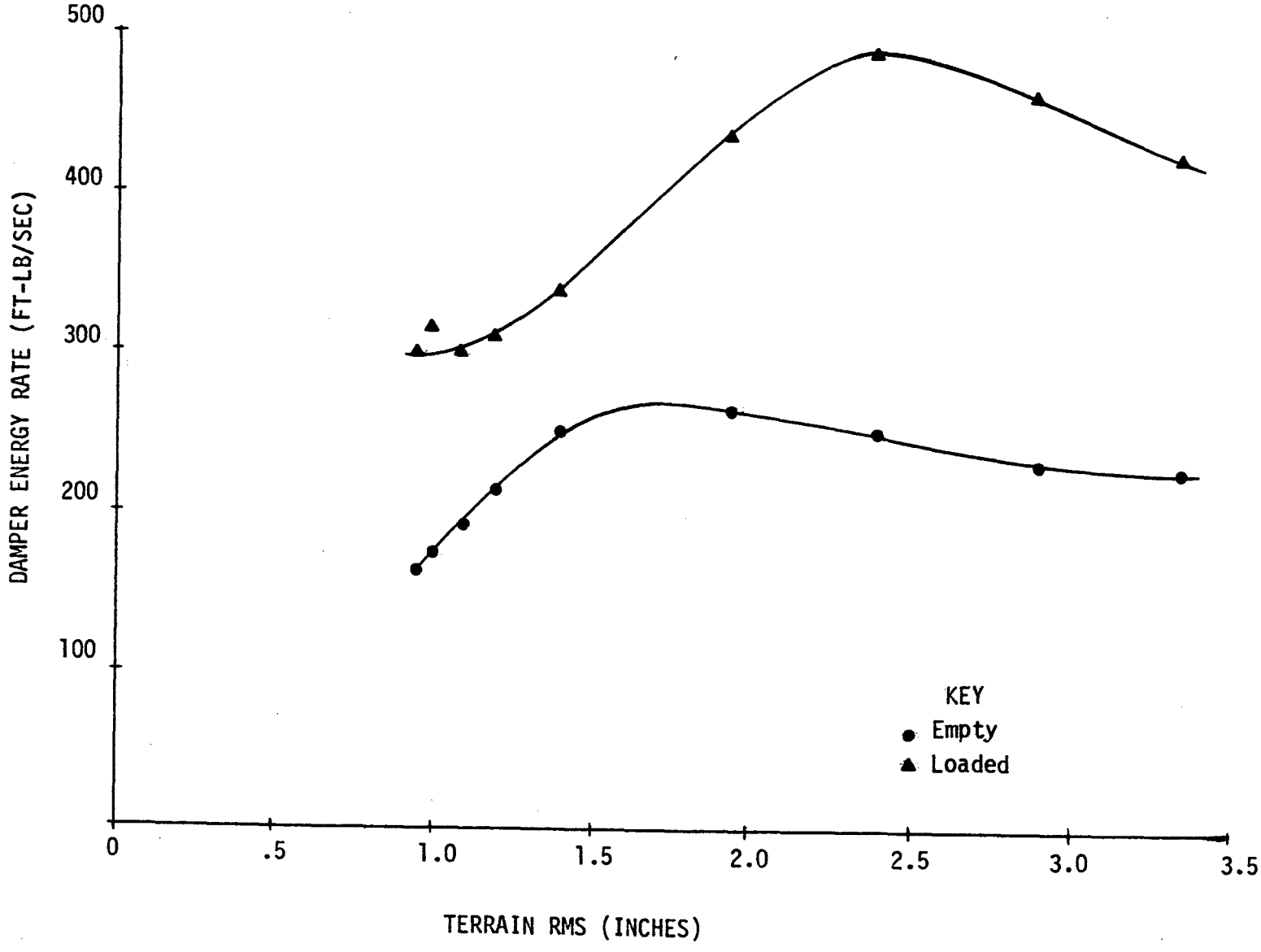

CONSTANT 6 WATT LEVEL - ADAPTIVE VIBRATION DAMPER

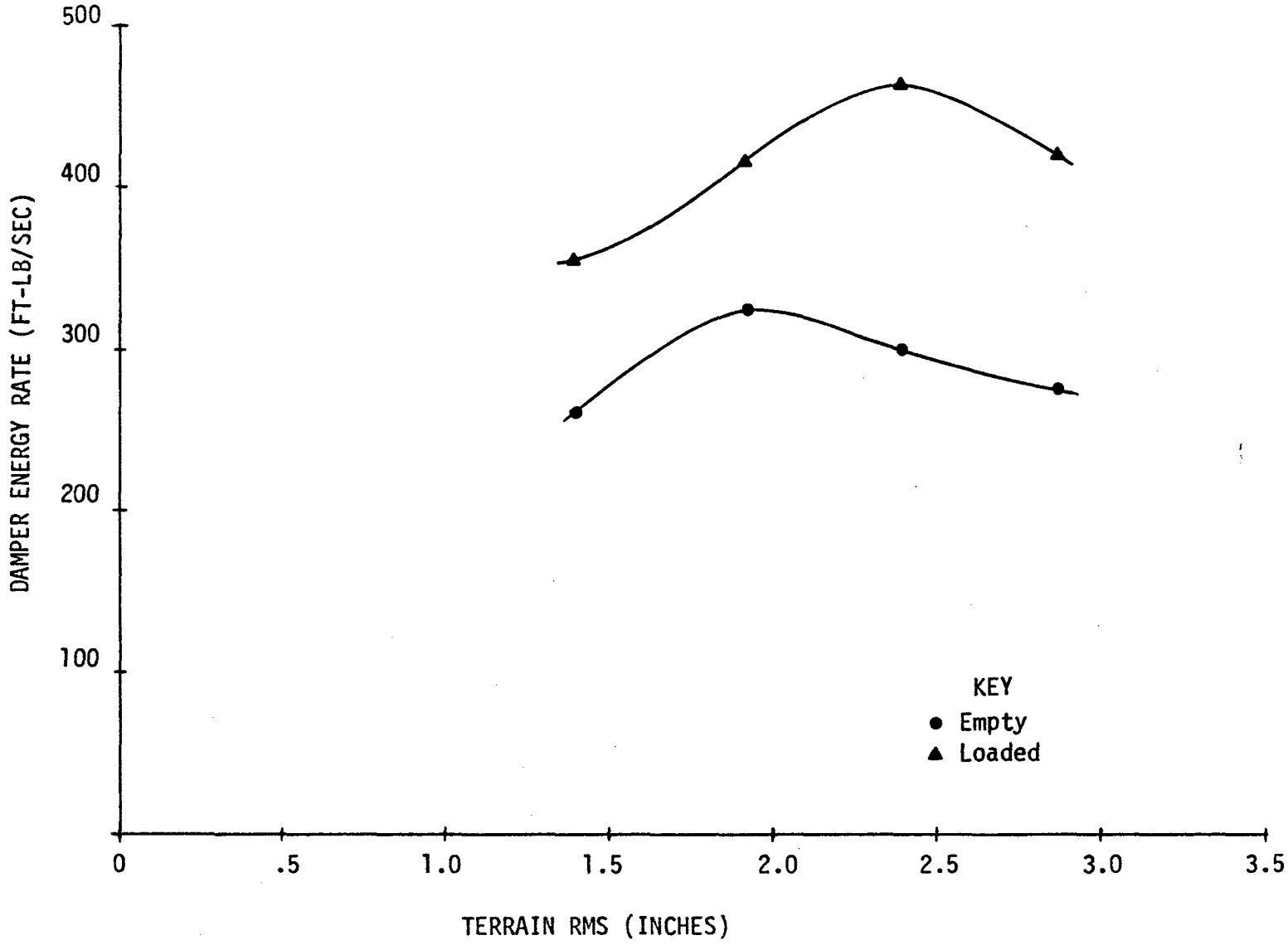

CONSTANT 6 WATT LEVEL - ADAPTIVE VIBRATION DAMPER MOD I

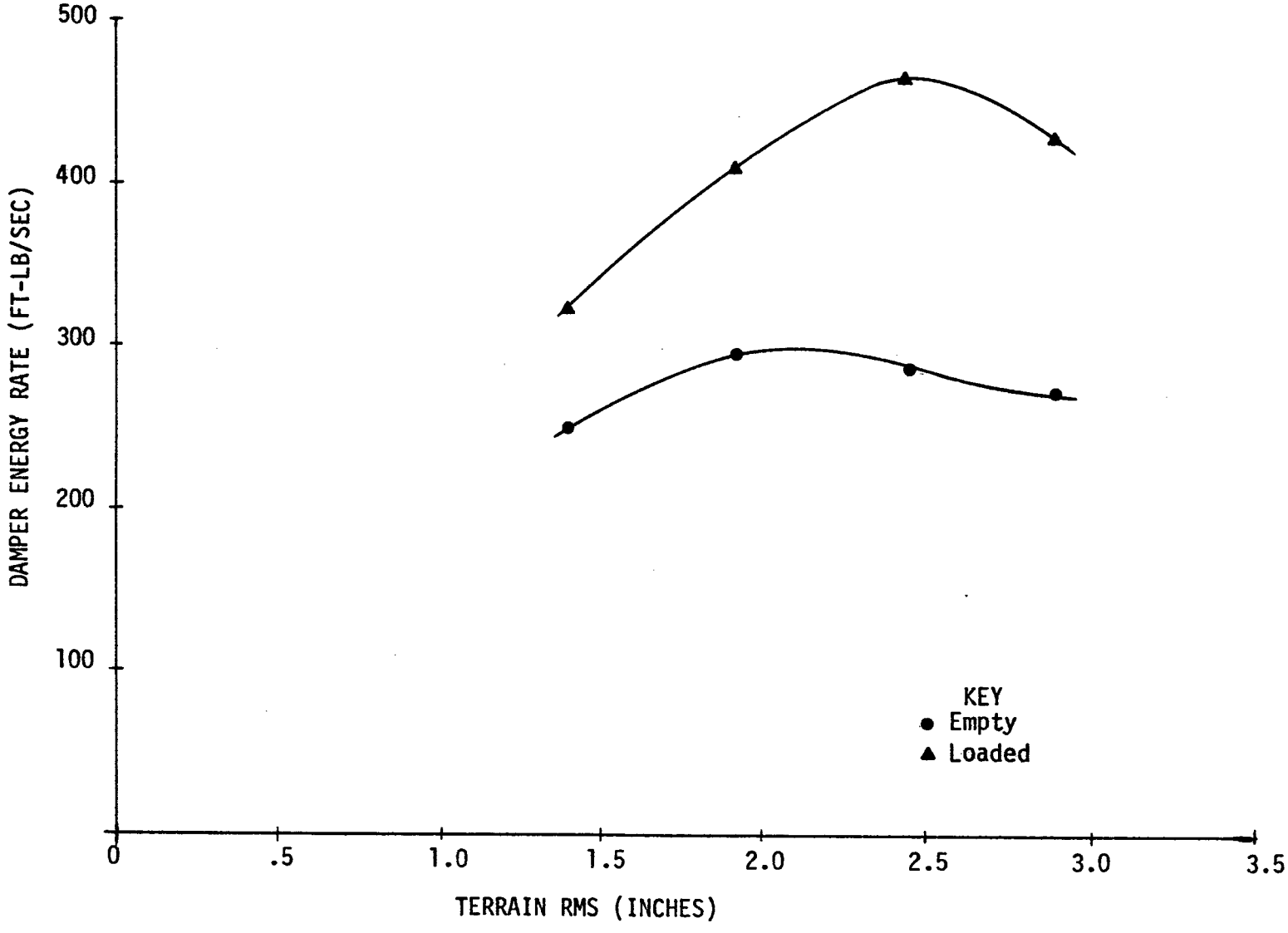

CONSTANT 6 WATT LEVEL - ADAPTIVE VIBRATION DAMPER MOD II

APPENDIX E

DIGITAL OUTPUT DATA FOR ALL DAMPERS WITH TWO-INCH RMS TERRAIN INPUT

CONVENTIONAL DAMPING

```
RUN ID ---  TERRAIN ID  RD10  TF=2.0  VEL=  16.000 MPH
    OVER  2831.90 FEET OF TERRAIN IN  120.681 SECONDS


    EMPTY VEHICLE


    CALCULATED RMS=            1.025 INCHES
    ABSORBED POWER=          5.71801 WATTS
    DAMPER ENERGY (FRONT)=     31958.00781 FT-LB   =       264.81213 FT-LB/SEC
                  (REAR)=      27441.40625 FT-LB   =       227.38641 FT-LB/SEC
    MAXIMUM CLOSING VELOCITY (FRONT)+ =          3.84033 FT/SEC
                                    - =         -6.29882 FT/SEC
    MAXIMUM CLOSING VELOCITY (REAR)+ =           4.62890 FT/SEC
                                    - =         -3.95996 FT/SEC
    MAXIMUM WHEEL ACCELERATION (FRONT)=        196.44824 FT/SEC**2
                               (REAR)=         207.83651 FT/SEC**2


    LOADED VEHICLE


    CALCULATED RMS=            1.923 INCHES
    ABSORBED POWER=          3.29492 WATTS
    DAMPER ENERGY (FRONT)=     31396.48437 FT-LB   =       260.15917 FT-LB/SEC
                  (REAR)=      33789.06250 FT-LB   =       279.98468 FT-LB/SEC
    MAXIMUM CLOSING VELOCITY (FRONT)+ =          3.63281 FT/SEC
                                    - =         -6.28906 FT/SEC
    MAXIMUM CLOSING VELOCITY (REAR)+ =           6.08886 FT/SEC
                                    - =         -5.65917 FT/SEC
    MAXIMUM WHEEL ACCELERATION (FRONT)=        202.92776 FT/SEC**2
                               (REAR)=         284.02032 FT/SEC**2
```

```
RUN ID ---   TERRAIN ID   RD10   Tr=2.0   VEL=   17.000 MPH
     OVER   2831.99 FEET OF TERRAIN IN   113.582 SECONDS


     EMPTY VEHICLE


     CALCULATED RMS=            1.942 INCHES
     ABSORBED POWER=          8.23315 WATTS
     DAMPER ENERGY (FRONT)=     33056.64062 FT-LB   =       291.03540 FT-LB/SEC
                   (REAR)=      27709.96093 FT-LB   =       243.96249 FT-LB/SEC
     MAXIMUM CLOSING VELOCITY (FRONT)+ =          4.92187 FT/SEC
                                     - =         -6.80664 FT/SEC
     MAXIMUM CLOSING VELOCITY (REAR)+ =           4.64355 FT/SEC
                                     - =         -4.00390 FT/SEC
     MAXIMUM WHEEL ACCELERATION (FRONT)=        226.19525 FT/SEC**2
                                (REAR)=         225.11532 FT/SEC**2


     LOADED VEHICLE


     CALCULATED RMS=            1.937 INCHES
     ABSORBED POWER=          8.64587 WATTS
     DAMPER ENERGY (FRONT)=     32324.21875 FT-LB   =       284.58703 FT-LB/SEC
                   (REAR)=      33789.06250 FT-LB   =       297.48376 FT-LB/SEC
     MAXIMUM CLOSING VELOCITY (FRONT)+ =          4.49707 FT/SEC
                                     - =         -6.69433 FT/SEC
     MAXIMUM CLOSING VELOCITY (REAR)+ =           6.30371 FT/SEC
                                     - =         -5.56640 FT/SEC
     MAXIMUM WHEEL ACCELERATION (FRONT)=        226.19525 FT/SEC**2
                                (REAR)=         292.26702 FT/SEC**2
```

```
RUN TO ---  TERRAIN ID  RD10  TF=2.0  VEL=  27.500 MPH
    OVER  2831.99 FEET OF TERRAIN IN   70.214 SECONDS


    EMPTY VEHICLE


    CALCULATED RMS=            1.942 INCHES
    ABSORBED POWER=        10.14141 WATTS
    DAMPER ENERGY (FRONT)=    30957.03125 FT-LB   =       440.89001 FT-LB/SEC
                  (REAR)=     30126.95312 FT-LB   =       429.06805 FT-LB/SEC
    MAXIMUM CLOSING VELOCITY (FRONT)+ =        6.66992 FT/SEC
                                    - =       -6.76513 FT/SEC
    MAXIMUM CLOSING VELOCITY (REAR)+ =        7.88330 FT/SEC
                                    - =       -6.18652 FT/SEC
    MAXIMUM WHEEL ACCELERATION (FRONT)=      263.89447 FT/SEC**2
                               (REAR)=      334.18760 FT/SEC**2


    LOADED VEHICLE


    CALCULATED RMS=            1.949 INCHES
    ABSORBED POWER=         5.82501 WATTS
    DAMPER ENERGY (FRONT)=    30322.26562 FT-LB   =       431.84967 FT-LB/SEC
                  (REAR)=     32177.73437 FT-LB   =       458.27526 FT-LB/SEC
    MAXIMUM CLOSING VELOCITY (FRONT)+ =        6.63330 FT/SEC
                                    - =       -6.75292 FT/SEC
    MAXIMUM CLOSING VELOCITY (REAR)+ =        6.91406 FT/SEC
                                    - =       -6.61621 FT/SEC
    MAXIMUM WHEEL ACCELERATION (FRONT)=      257.90576 FT/SEC**2
                               (REAR)=      358.63336 FT/SEC**2
```

```
RUN ID ---  TERRAIN ID  RD10  TF=2.0  VEL=  29.000 MPH
    OVER  2831.99 FEET OF TERRAIN IN   66.583 SECONDS


    EMPTY VEHICLE


    CALCULATED RMS=            1.938 INCHES
    ABSORBED POWER=        10.86376 WATTS
    DAMPER ENERGY (FRONT)=     30395.50781 FT-LB   =       456.50512 FT-LB/SEC
                  (REAR)=      29980.46875 FT-LB   =       450.27172 FT-LB/SEC
    MAXIMUM CLOSING VELOCITY (FRONT)+ =          7.09472 FT/SEC
                                    - =         -7.19482 FT/SEC
    MAXIMUM CLOSING VELOCITY (REAR)+ =           8.19824 FT/SEC
                                    - =         -5.88964 FT/SEC
    MAXIMUM WHEEL ACCELERATION (FRONT)=        254.46966 FT/SEC**2
                               (REAR)=         371.88702 FT/SEC**2


    LOADED VEHICLE


    CALCULATED RMS=            1.940 INCHES
    ABSORBED POWER=         6.20983 WATTS
    DAMPER ENERGY (FRONT)=     30273.43750 FT-LB   =       454.67175 FT-LB/SEC
                  (REAR)=      32861.32812 FT-LB   =       493.53887 FT-LB/SEC
    MAXIMUM CLOSING VELOCITY (FRONT)+ =          6.92382 FT/SEC
                                    - =         -7.11669 FT/SEC
    MAXIMUM CLOSING VELOCITY (REAR)+ =           6.86523 FT/SEC
                                    - =         -7.25585 FT/SEC
    MAXIMUM WHEEL ACCELERATION (FRONT)=        256.04046 FT/SEC**2
                               (REAR)=         345.77246 FT/SEC**2
```

CONSTANT DAMPING

```
RUN ID ---  TERRAIN ID  25%  TF=2.0   VEL=  10.000 MPH
   OVER  2831.99 FEET OF TERRAIN IN  193.090 SECONDS


   EMPTY VEHICLE


   CALCULATED RMS=          28.117 INCHES
   ABSORBED POWER=         1.51776 WATTS
   DAMPER ENERGY (FRONT)=    14355.46875 FT-LB   =        74.34565 FT-LB/SEC
                 (REAR)=   -17919.92187 FT-LB   =       -92.80564 FT-LB/SEC
   MAXIMUM CLOSING VELOCITY (FRONT)+ =        4.53613 FT/SEC
                                   - =       -4.12109 FT/SEC
   MAXIMUM CLOSING VELOCITY (REAR)+ =         4.14062 FT/SEC
                                   - =       -4.52148 FT/SEC
   MAXIMUM WHEEL ACCELERATION (FRONT)=      161.30157 FT/SEC**2
                              (REAR)=       159.82894 FT/SEC**2


   LOADED VEHICLE


   CALCULATED RMS=          26.214 INCHES
   ABSORBED POWER=          .96856 WATTS
   DAMPER ENERGY (FRONT)=    22875.97656 FT-LB   =       118.47257 FT-LB/SEC
                 (REAR)=   -15747.07031 FT-LB   =       -81.55264 FT-LB/SEC
   MAXIMUM CLOSING VELOCITY (FRONT)+ =        4.24316 FT/SEC
                                   - =       -3.52294 FT/SEC
   MAXIMUM CLOSING VELOCITY (REAR)+ =         4.61669 FT/SEC
                                   - =       -4.29199 FT/SEC
   MAXIMUM WHEEL ACCELERATION (FRONT)=      154.82202 FT/SEC**2
                              (REAR)=       157.47274 FT/SEC**2
```

```
RUN ID ---   TERRAIN ID  25%   2.0      VEL=  25.000 MPH
    OVER  2831.99 FEET OF TERRAIN IN   77.236 SECONDS


    EMPTY VEHICLE


    CALCULATED RMS=          54.725 INCHES
    ABSORBED POWER=         4.08032 WATTS
    DAMPER ENERGY (FRONT)=    28857.42187 FT-LB   =       373.62487 FT-LB/SEC
                  (REAR)=   -25244.14062 FT-LB   =      -326.84283 FT-LB/SEC
    MAXIMUM CLOSING VELOCITY (FRONT)+ =        6.37939 FT/SEC
                                    - =       -6.43554 FT/SEC
    MAXIMUM CLOSING VELOCITY (REAR)+ =         8.93066 FT/SEC
                                    - =       -8.38867 FT/SEC
    MAXIMUM WHEEL ACCELERATION (FRONT)=      253.19338 FT/SEC**2
                               (REAR)=      424.70513 FT/SEC**2


    LOADED VEHICLE


    CALCULATED RMS=          54.466 INCHES
    ABSORBED POWER=         2.28289 WATTS
    DAMPER ENERGY (FRONT)=    26904.29687 FT-LB   =       348.33721 FT-LB/SEC
                  (REAR)=   -24755.85937 FT-LB   =      -320.52087 FT-LB/SEC
    MAXIMUM CLOSING VELOCITY (FRONT)+ =        5.91308 FT/SEC
                                    - =       -6.32324 FT/SEC
    MAXIMUM CLOSING VELOCITY (REAR)+ =         8.35205 FT/SEC
                                    - =       -6.27685 FT/SEC
    MAXIMUM WHEEL ACCELERATION (FRONT)=      251.32806 FT/SEC**2
                               (REAR)=      521.50573 FT/SEC**2
```

```
RUN TO ---  TERRAIN ID  25%   2.0      VEL=  35.000 MPH
    OVER  2831.99 FEET OF TERRAIN IN   55.168 SECONDS


    EMPTY VEHICLE


    CALCULATED RMS=          66.828 INCHES
    ABSORBED POWER=         4.05413 WATTS
    DAMPER ENERGY (FRONT)=     25390.62500 FT-LB   =       460.23498 FT-LB/SEC
                  (REAR)=    -26562.50000 FT-LB   =      -481.47668 FT-LB/SEC
    MAXIMUM CLOSING VELOCITY (FRONT)+ =         8.52783 FT/SEC
                                    - =        -9.00390 FT/SEC
    MAXIMUM CLOSING VELOCITY (REAR)+ =          8.87451 FT/SEC
                                    - =        -6.60156 FT/SEC
    MAXIMUM WHEEL ACCELERATION (FRONT)=       327.02099 FT/SEC**2
                               (REAR)=        426.86499 FT/SEC**2


    LOADED VEHICLE


    CALCULATED RMS=          67.393 INCHES
    ABSORBED POWER=         2.91436 WATTS
    DAMPER ENERGY (FRONT)=     28027.34375 FT-LB   =       508.02862 FT-LB/SEC
                  (REAR)=    -26660.15625 FT-LB   =      -483.24682 FT-LB/SEC
    MAXIMUM CLOSING VELOCITY (FRONT)+ =         8.88671 FT/SEC
                                    - =        -8.86718 FT/SEC
    MAXIMUM CLOSING VELOCITY (REAR)+ =          8.11279 FT/SEC
                                    - =        -7.60253 FT/SEC
    MAXIMUM WHEEL ACCELERATION (FRONT)=       330.16259 FT/SEC**2
                               (REAR)=        468.49121 FT/SEC**2
```

```
RUN TO ---   TERRAIN TO  25%   2.0      VEL=  45.000 MPH
    OVER  2931.99 FEET OF TERRAIN IN   42.909 SECONDS


    EMPTY VEHICLE


    CALCULATED RMS=          74.053 INCHES
    ABSORBED POWER=         3.36553 WATTS
    DAMPER ENERGY (FRONT)=    22949.21875 FT-LB   =       534.83361 FT-LB/SEC
                  (REAR)=   -24629.10156 FT-LB   =      -578.64453 FT-LB/SEC
    MAXIMUM CLOSING VELOCITY (FRONT)+ =          8.75244 FT/SEC
                                    - =         -8.26416 FT/SEC
    MAXIMUM CLOSING VELOCITY (REAR)+ =          9.35546 FT/SEC
                                    - =         -7.15820 FT/SEC
    MAXIMUM WHEEL ACCELERATION (FRONT)=       376.89392 FT/SEC**2
                               (REAR)=       444.73284 FT/SEC**2


    LOADED VEHICLE


    CALCULATED RMS=          78.471 INCHES
    ABSORBED POWER=         3.12475 WATTS
    DAMPER ENERGY (FRONT)=    30273.43750 FT-LB   =       705.52514 FT-LB/SEC
                  (REAR)=   -28125.00000 FT-LB   =      -655.45568 FT-LB/SEC
    MAXIMUM CLOSING VELOCITY (FRONT)+ =          9.09667 FT/SEC
                                    - =         -8.20068 FT/SEC
    MAXIMUM CLOSING VELOCITY (REAR)+ =         10.26367 FT/SEC
                                    - =        -10.74951 FT/SEC
    MAXIMUM WHEEL ACCELERATION (FRONT)=       375.42132 FT/SEC**2
                               (REAR)=       680.35290 FT/SEC**2
```

```
RUN ID ---  TERRAIN ID  25%     2.0     VEL=  55.000 MPH
    OVER  2831.99 FEET OF TERRAIN IN    35.107 SECONDS


    EMPTY VEHICLE


    CALCULATED RMS=            87.091 INCHES
    ABSORBED POWER=          9.97082 WATTS
    DAMPER ENERGY (FRONT)=     22290.03906 FT-LB   =       634.90942 FT-LB/SEC
                  (REAR)=    -28466.79687 FT-LB   =      -810.84826 FT-LB/SEC
    MAXIMUM CLOSING VELOCITY (FRONT)+ =        10.49804 FT/SEC
                                    - =        -9.92919 FT/SEC
    MAXIMUM CLOSING VELOCITY (REAR)+ =        11.39648 FT/SEC
                                    - =        -7.90283 FT/SEC
    MAXIMUM WHEEL ACCELERATION (FRONT)=       419.40368 FT/SEC**2
                               (REAR)=       524.45092 FT/SEC**2


    LOADED VEHICLE


    CALCULATED RMS=            89.295 INCHES
    ABSORBED POWER=          3.69799 WATTS
    DAMPER ENERGY (FRONT)=     28271.48437 FT-LB   =       805.28491 FT-LB/SEC
                  (REAR)=    -29980.46875 FT-LB   =      -853.96374 FT-LB/SEC
    MAXIMUM CLOSING VELOCITY (FRONT)+ =        11.41113 FT/SEC
                                    - =        -9.97802 FT/SEC
    MAXIMUM CLOSING VELOCITY (REAR)+ =         9.92675 FT/SEC
                                    - =       -10.42968 FT/SEC
    MAXIMUM WHEEL ACCELERATION (FRONT)=       413.31683 FT/SEC**2
                               (REAR)=       637.94128 FT/SEC**2
```

```
RUN ID ---  TERRAIN ID  50%     TF=2.  VEL=  10.000 MPH
    OVER  2831.99 FEET OF TERRAIN IN  193.090 SECONDS


    EMPTY VEHICLE


    CALCULATED RMS=          20.583 INCHES
    ABSORBED POWER=          1.31634 WATTS
    DAMPER ENERGY (FRONT)=     15649.41406 FT-LB   =        81.04687 FT-LB/SEC
                  (REAR)=    -18286.13281 FT-LB   =       -94.70220 FT-LB/SEC
    MAXIMUM CLOSING VELOCITY (FRONT)+ =        2.98828 FT/SEC
                             - =        -3.16894 FT/SEC
    MAXIMUM CLOSING VELOCITY (REAR)+ =         3.15917 FT/SEC
                             - =        -3.06152 FT/SEC
    MAXIMUM WHEEL ACCELERATION (FRONT)=       116.53375 FT/SEC**2
                               (REAR)=       135.48153 FT/SEC**2


    LOADED VEHICLE


    CALCULATED RMS=          20.039 INCHES
    ABSORBED POWER=          .61981 WATTS
    DAMPER ENERGY (FRONT)=     22363.28125 FT-LB   =       115.81738 FT-LB/SEC
                  (REAR)=    -17089.84375 FT-LB   =       -88.50674 FT-LB/SEC
    MAXIMUM CLOSING VELOCITY (FRONT)+ =        3.03710 FT/SEC
                             - =        -3.10546 FT/SEC
    MAXIMUM CLOSING VELOCITY (REAR)+ =         3.61328 FT/SEC
                             - =        -3.37890 FT/SEC
    MAXIMUM WHEEL ACCELERATION (FRONT)=       111.03594 FT/SEC**2
                               (REAR)=       130.76913 FT/SEC**2
```

```
RUN ID ---   TERRAIN ID  50%   2.0      VEL=  25.000 MPH
    OVER  2831.99 FEET OF TERRAIN IN   77.236 SECONDS


    EMPTY VEHICLE


    CALCULATED RMS=          43.611 INCHES
    ABSORBED POWER=         3.07214 WATTS
    DAMPER ENERGY (FRONT)=    30517.57812 FT-LB   =       395.11938 FT-LB/SEC
                  (REAR)=   -30566.40625 FT-LB   =      -395.75164 FT-LB/SEC
    MAXIMUM CLOSING VELOCITY (FRONT)+ =        5.23925 FT/SEC
                                    - =       -5.64941 FT/SEC
    MAXIMUM CLOSING VELOCITY (REAR)+ =         6.61132 FT/SEC
                                    - =       -4.58984 FT/SEC
    MAXIMUM WHEEL ACCELERATION (FRONT)=      189.57598 FT/SEC**2
                               (REAR)=      326.03924 FT/SEC**2


    LOADED VEHICLE


    CALCULATED RMS=          43.275 INCHES
    ABSORBED POWER=         2.67303 WATTS
    DAMPER ENERGY (FRONT)=    32568.35937 FT-LB   =       421.67138 FT-LB/SEC
                  (REAR)=   -30249.02343 FT-LB   =      -391.64239 FT-LB/SEC
    MAXIMUM CLOSING VELOCITY (FRONT)+ =        5.16845 FT/SEC
                                    - =       -5.53710 FT/SEC
    MAXIMUM CLOSING VELOCITY (REAR)+ =         6.60156 FT/SEC
                                    - =       -5.04882 FT/SEC
    MAXIMUM WHEEL ACCELERATION (FRONT)=      185.64898 FT/SEC**2
                               (REAR)=      360.30236 FT/SEC**2
```

```
RUN ID ---   TERRAIN ID  50%   2.0      VEL=  35.000 MPH
    OVER  2831.99 FEET OF TERRAIN IN   55.168 SECONDS


    EMPTY VEHICLE


    CALCULATED RMS=          50.821 INCHES
    ABSORBED POWER=         5.53674 WATTS
    DAMPER ENERGY (FRONT)=    30200.19531 FT-LB   =       547.41406 FT-LB/SEC
                  (REAR)=   -30029.29687 FT-LB   =      -544.31652 FT-LB/SEC
    MAXIMUM CLOSING VELOCITY (FRONT)+ =          6.90917 FT/SEC
                                    - =         -6.08886 FT/SEC
    MAXIMUM CLOSING VELOCITY (REAR)+ =          6.32812 FT/SEC
                                    - =         -4.89257 FT/SEC
    MAXIMUM WHEEL ACCELERATION (FRONT)=       254.56784 FT/SEC**2
                               (REAR)=       376.40307 FT/SEC**2


    LOADED VEHICLE


    CALCULATED RMS=          50.887 INCHES
    ABSORBED POWER=         3.45019 WATTS
    DAMPER ENERGY (FRONT)=    33789.06250 FT-LB   =       612.46655 FT-LB/SEC
                  (REAR)=   -30346.67968 FT-LB   =      -550.06945 FT-LB/SEC
    MAXIMUM CLOSING VELOCITY (FRONT)+ =          7.07031 FT/SEC
                                    - =         -6.15234 FT/SEC
    MAXIMUM CLOSING VELOCITY (REAR)+ =          6.61640 FT/SEC
                                    - =         -6.18896 FT/SEC
    MAXIMUM WHEEL ACCELERATION (FRONT)=       248.18646 FT/SEC**2
                               (REAR)=       378.17022 FT/SEC**2
```

```
RUN ID ---  TERRAIN ID  50%   2.0      VEL=  45.000 MPH
    OVER  2831.99 FEET OF TERRAIN IN    42.909 SECONDS


    EMPTY VEHICLE


    CALCULATED RMS=          57.043 INCHES
    ABSORBED POWER=         4.94439 WATTS
    DAMPER ENERGY (FRONT)=     27587.89062 FT-LB   =       642.93823 FT-LB/SEC
                  (REAR)=    -30371.09375 FT-LB   =      -707.80114 FT-LB/SEC
    MAXIMUM CLOSING VELOCITY (FRONT)+ =          6.56982 FT/SEC
                                    - =         -6.81152 FT/SEC
    MAXIMUM CLOSING VELOCITY (REAR)+ =           7.96875 FT/SEC
                                    - =         -4.87548 FT/SEC
    MAXIMUM WHEEL ACCELERATION (FRONT)=        259.18206 FT/SEC**2
                               (REAR)=         389.55853 FT/SEC**2


    LOADED VEHICLE


    CALCULATED RMS=          58.504 INCHES
    ABSORBED POWER=         4.03900 WATTS
    DAMPER ENERGY (FRONT)=     35302.73437 FT-LB   =       822.73339 FT-LB/SEC
                  (REAR)=    -32470.70312 FT-LB   =      -756.73278 FT-LB/SEC
    MAXIMUM CLOSING VELOCITY (FRONT)+ =          6.68701 FT/SEC
                                    - =         -6.50878 FT/SEC
    MAXIMUM CLOSING VELOCITY (REAR)+ =           7.17285 FT/SEC
                                    - =         -7.76367 FT/SEC
    MAXIMUM WHEEL ACCELERATION (FRONT)=        264.97436 FT/SEC**2
                               (REAR)=         510.51013 FT/SEC**2
```

```
RUN ID ---   TERRAIN ID  50%     2.0     VEL=  55.000 MPH
    OVER  2931.99 FEET OF TERRAIN IN   35.107 SECONDS


    EMPTY VEHICLE


    CALCULATED RMS=          68.589 INCHES
    ABSORBED POWER=        6.71500 WATTS
    DAMPER ENERGY (FRONT)=     22021.48437 FT-LB   =       627.25988 FT-LB/SEC
                  (REAR)=    -33203.12500 FT-LB   =      -945.75781 FT-LB/SEC
    MAXIMUM CLOSING VELOCITY (FRONT)+ =          8.63769 FT/SEC
                                    - =         -7.88818 FT/SEC
    MAXIMUM CLOSING VELOCITY (REAR)+ =           9.11376 FT/SEC
                                    - =         -4.83378 FT/SEC
    MAXIMUM WHEEL ACCELERATION (FRONT)=        336.15130 FT/SEC**2
                               (REAR)=        391.32568 FT/SEC**2


    LOADED VEHICLE


    CALCULATED RMS=          67.401 INCHES
    ABSORBED POWER=        7.83787 WATTS
    DAMPER ENERGY (FRONT)=     34716.79687 FT-LB   =       988.87316 FT-LB/SEC
                  (REAR)=    -33935.54687 FT-LB   =      -966.62011 FT-LB/SEC
    MAXIMUM CLOSING VELOCITY (FRONT)+ =          8.53515 FT/SEC
                                    - =         -6.90429 FT/SEC
    MAXIMUM CLOSING VELOCITY (REAR)+ =           7.89306 FT/SEC
                                    - =         -7.24609 FT/SEC
    MAXIMUM WHEEL ACCELERATION (FRONT)=        315.23999 FT/SEC**2
                               (REAR)=        506.58312 FT/SEC**2
```

```
RUN ID ---  TERRAIN ID  75%  TF=2.0   VEL=  10.000 MPH
    OVER  2831.99 FEET OF TERRAIN IN  193.090 SECONDS


    EMPTY VEHICLE


    CALCULATED RMS=          18.054 INCHES
    ABSORBED POWER=         1.88037 WATTS
    DAMPER ENERGY (FRONT)=    16259.76562 FT-LB   =       84.20782 FT-LB/SEC
                  (REAR)=   -18310.54687 FT-LB   =      -94.82865 FT-LB/SEC
    MAXIMUM CLOSING VELOCITY (FRONT)+ =        2.53417 FT/SEC
                                    - =       -2.62207 FT/SEC
    MAXIMUM CLOSING VELOCITY (REAR)+ =         2.54882 FT/SEC
                                    - =       -2.46093 FT/SEC
    MAXIMUM WHEEL ACCELERATION (FRONT)=       100.53123 FT/SEC**2
                               (REAR)=       135.28518 FT/SEC**2


    LOADED VEHICLE


    CALCULATED RMS=          17.856 INCHES
    ABSORBED POWER=          .90881 WATTS
    DAMPER ENERGY (FRONT)=    21435.54687 FT-LB   =      111.01272 FT-LB/SEC
                  (REAR)=   -17675.78125 FT-LB   =      -91.54125 FT-LB/SEC
    MAXIMUM CLOSING VELOCITY (FRONT)+ =        2.55126 FT/SEC
                                    - =       -2.66357 FT/SEC
    MAXIMUM CLOSING VELOCITY (REAR)+ =         2.85156 FT/SEC
                                    - =       -2.81738 FT/SEC
    MAXIMUM WHEEL ACCELERATION (FRONT)=        91.40095 FT/SEC**2
                               (REAR)=       123.50418 FT/SEC**2
```

```
RUN ID ---  TERRAIN ID  75%   2.0      VEL=  25.000 MPH
    OVER  2831.99 FEET OF TERRAIN IN   77.236 SECONDS


    EMPTY VEHICLE


    CALCULATED RMS=          36.622 INCHES
    ABSORBED POWER=         4.13403 WATTS
    DAMPER ENERGY (FRONT)=    30737.30468 FT-LB   =       397.96423 FT-LB/SEC
                  (REAR)=   -33984.37500 FT-LB   =      -440.00500 FT-LB/SEC
    MAXIMUM CLOSING VELOCITY (FRONT)+ =          4.51416 FT/SEC
                                    - =         -4.96582 FT/SEC
    MAXIMUM CLOSING VELOCITY (REAR)+ =           5.23681 FT/SEC
                                    - =         -3.06152 FT/SEC
    MAXIMUM WHEEL ACCELERATION (FRONT)=        175.92965 FT/SEC**2
                               (REAR)=         259.18206 FT/SEC**2


    LOADED VEHICLE


    CALCULATED RMS=          36.261 INCHES
    ABSORBED POWER=         2.75738 WATTS
    DAMPER ENERGY (FRONT)=    35791.01562 FT-LB   =       463.39599 FT-LB/SEC
                  (REAR)=   -33447.26562 FT-LB   =      -433.05090 FT-LB/SEC
    MAXIMUM CLOSING VELOCITY (FRONT)+ =          4.58251 FT/SEC
                                    - =         -4.90234 FT/SEC
    MAXIMUM CLOSING VELOCITY (REAR)+ =           5.53955 FT/SEC
                                    - =         -4.37255 FT/SEC
    MAXIMUM WHEEL ACCELERATION (FRONT)=        170.72637 FT/SEC**2
                               (REAR)=         265.95611 FT/SEC**2
```

```
RUN ID ---  TERRAIN ID  75%   2.0      VEL=  35.000 MPH
    OVER  2831.99 FEET OF TERRAIN IN   55.168 SECONDS


    EMPTY VEHICLE


    CALCULATED RMS=          44.460 INCHES
    ABSORBED POWER=         6.67114 WATTS
    DAMPER ENERGY (FRONT)=    31689.45312 FT-LB   =       574.40869 FT-LB/SEC
                  (REAR)=   -32885.74218 FT-LB   =      -596.09289 FT-LB/SEC
    MAXIMUM CLOSING VELOCITY (FRONT)+ =        5.77392 FT/SEC
                                    - =       -5.29785 FT/SEC
    MAXIMUM CLOSING VELOCITY (REAR)+ =         5.98144 FT/SEC
                                    - =       -3.53515 FT/SEC
    MAXIMUM WHEEL ACCELERATION (FRONT)=      208.32739 FT/SEC**2
                               (REAR)=       355.98266 FT/SEC**2


    LOADED VEHICLE


    CALCULATED RMS=          44.133 INCHES
    ABSORBED POWER=         4.85058 WATTS
    DAMPER ENERGY (FRONT)=    36914.06250 FT-LB   =       669.11083 FT-LB/SEC
                  (REAR)=   -32812.50000 FT-LB   =      -594.76538 FT-LB/SEC
    MAXIMUM CLOSING VELOCITY (FRONT)+ =        5.83740 FT/SEC
                                    - =       -5.35888 FT/SEC
    MAXIMUM CLOSING VELOCITY (REAR)+ =         5.87158 FT/SEC
                                    - =       -5.22949 FT/SEC
    MAXIMUM WHEEL ACCELERATION (FRONT)=      210.78176 FT/SEC**2
                               (REAR)=       328.69000 FT/SEC**2
```

```
RUN ID ---  TERRAIN ID  75%   2.0      VEL=  45.000 MPH
    OVER  2831.96 FEET OF TERRAIN IN   42.909 SECONDS


    EMPTY VEHICLE


    CALCULATED RMS=          49.423 INCHES
    ABSORBED POWER=        7.69439 WATTS
    DAMPER ENERGY (FRONT)=    28442.38281 FT-LB   =       662.85229 FT-LB/SEC
                  (REAR)=   -33154.29687 FT-LB   =      -772.66394 FT-LB/SEC
    MAXIMUM CLOSING VELOCITY (FRONT)+ =          5.34667 FT/SEC
                                    - =         -6.01318 FT/SEC
    MAXIMUM CLOSING VELOCITY (REAR)+ =           7.20214 FT/SEC
                                    - =         -3.31542 FT/SEC
    MAXIMUM WHEEL ACCELERATION (FRONT)=        216.67227 FT/SEC**2
                               (REAR)=         357.35711 FT/SEC**2


    LOADED VEHICLE


    CALCULATED RMS=          50.061 INCHES
    ABSORBED POWER=        5.83587 WATTS
    DAMPER ENERGY (FRONT)=    37353.51562 FT-LB   =       870.52697 FT-LB/SEC
                  (REAR)=   -34667.96875 FT-LB   =      -807.94018 FT-LB/SEC
    MAXIMUM CLOSING VELOCITY (FRONT)+ =          5.50048 FT/SEC
                                    - =         -5.84228 FT/SEC
    MAXIMUM CLOSING VELOCITY (REAR)+ =           6.21582 FT/SEC
                                    - =         -5.62255 FT/SEC
    MAXIMUM WHEEL ACCELERATION (FRONT)=        220.99197 FT/SEC**2
                               (REAR)=         395.84173 FT/SEC**2
```

```
RUN ID ---  TERRAIN ID  75%   2.0      VEL=  55.000 MPH
    OVER  2831.99 FEET OF TERRAIN IN   35.107 SECONDS


    EMPTY VEHICLE


    CALCULATED RMS=          53.209 INCHES
    ABSORBED POWER=        30.24059 WATTS
    DAMPER ENERGY (FRONT)=    20554.29687 FT-LB   =       588.31699 FT-LB/SEC
                  (REAR)=   -34667.96875 FT-LB   =      -987.48242 FT-LB/SEC
    MAXIMUM CLOSING VELOCITY (FRONT)+ =         7.08251 FT/SEC
                                    - =        -6.01562 FT/SEC
    MAXIMUM CLOSING VELOCITY (REAR)+ =          7.70263 FT/SEC
                                    - =        -3.16894 FT/SEC
    MAXIMUM WHEEL ACCELERATION (FRONT)=       274.89007 FT/SEC**2
                               (REAR)=       416.85113 FT/SEC**2


    LOADED VEHICLE


    CALCULATED RMS=          55.880 INCHES
    ABSORBED POWER=        21.52984 WATTS
    DAMPER ENERGY (FRONT)=    37158.20312 FT-LB   =      1058.41406 FT-LB/SEC
                  (REAR)=   -35791.01562 FT-LB   =     -1019.47131 FT-LB/SEC
    MAXIMUM CLOSING VELOCITY (FRONT)+ =         6.85546 FT/SEC
                                    - =        -5.91064 FT/SEC
    MAXIMUM CLOSING VELOCITY (REAR)+ =          7.44140 FT/SEC
                                    - =        -5.62500 FT/SEC
    MAXIMUM WHEEL ACCELERATION (FRONT)=       260.75286 FT/SEC**2
                               (REAR)=       431.18469 FT/SEC**2
```

```
RUN ID ---   TERRAIN ID  100% TF=2.0   VEL=  10.000 MPH
    OVER  2831.99 FEET OF TERRAIN IN  193.090 SECONDS


    EMPTY VEHICLE


    CALCULATED RMS=          16.648 INCHES
    ABSORBED POWER=        2.62158 WATTS
    DAMPER ENERGY (FRONT)=    17187.50000 FT-LB   =        89.01248 FT-LB/SEC
                  (REAR)=   -18896.48437 FT-LB   =       -97.86317 FT-LB/SEC
    MAXIMUM CLOSING VELOCITY (FRONT)+ =        2.23388 FT/SEC
                                    - =       -2.24609 FT/SEC
    MAXIMUM CLOSING VELOCITY (REAR)+ =         2.40234 FT/SEC
                                    - =       -2.00927 FT/SEC
    MAXIMUM WHEEL ACCELERATION (FRONT)=        78.63819 FT/SEC**2
                               (REAR)=       115.06112 FT/SEC**2


    LOADED VEHICLE


    CALCULATED RMS=          16.600 INCHES
    ABSORBED POWER=        1.38574 WATTS
    DAMPER ENERGY (FRONT)=    21630.85937 FT-LB   =       112.02423 FT-LB/SEC
                  (REAR)=   -18481.44531 FT-LB   =       -95.71371 FT-LB/SEC
    MAXIMUM CLOSING VELOCITY (FRONT)+ =        2.25097 FT/SEC
                                    - =       -2.29980 FT/SEC
    MAXIMUM CLOSING VELOCITY (REAR)+ =         2.46093 FT/SEC
                                    - =       -2.36083 FT/SEC
    MAXIMUM WHEEL ACCELERATION (FRONT)=        78.83454 FT/SEC**2
                               (REAR)=       105.93084 FT/SEC**2
```

```
RUN ID ---  TERRAIN ID  100%   2.0     VEL=  25.000 MPH
    OVER  2831.99 FEET OF TERRAIN IN   77.236 SECONDS


    EMPTY VEHICLE


    CALCULATED RMS=          32.033 INCHES
    ABSORBED POWER=         4.71356 WATTS
    DAMPER ENERGY (FRONT)=    30761.71875 FT-LB   =      398.28033 FT-LB/SEC
                  (REAR)=   -36010.74218 FT-LB   =     -466.24090 FT-LB/SEC
    MAXIMUM CLOSING VELOCITY (FRONT)+ =        3.82080 FT/SEC
                                    - =       -4.41894 FT/SEC
    MAXIMUM CLOSING VELOCITY (REAR)+ =         4.64111 FT/SEC
                                    - =       -2.42919 FT/SEC
    MAXIMUM WHEEL ACCELERATION (FRONT)=      152.46582 FT/SEC**2
                               (REAR)=      242.09960 FT/SEC**2


    LOADED VEHICLE


    CALCULATED RMS=          31.716 INCHES
    ABSORBED POWER=         3.26251 WATTS
    DAMPER ENERGY (FRONT)=    39013.67187 FT-LB   =      505.12060 FT-LB/SEC
                  (REAR)=   -35791.01562 FT-LB   =     -463.39605 FT-LB/SEC
    MAXIMUM CLOSING VELOCITY (FRONT)+ =        3.94775 FT/SEC
                                    - =       -4.36035 FT/SEC
    MAXIMUM CLOSING VELOCITY (REAR)+ =         4.78027 FT/SEC
                                    - =       -3.72070 FT/SEC
    MAXIMUM WHEEL ACCELERATION (FRONT)=      161.20339 FT/SEC**2
                               (REAR)=      222.75912 FT/SEC**2
```

```
RUN TO ---   TERRAIN ID  100%   2.0     VEL=  35.000 MPH
    OVER  2831.99 FEET OF TERRAIN IN   55.168 SECONDS


    EMPTY VEHICLE


    CALCULATED RMS=          38.636 INCHES
    ABSORBED POWER=         8.59203 WATTS
    DAMPER ENERGY (FRONT)=    31884.76562 FT-LB   =       577.94897 FT-LB/SEC
                  (REAR)=   -34716.79687 FT-LB   =      -629.28295 FT-LB/SEC
    MAXIMUM CLOSING VELOCITY (FRONT)+ =          5.05371 FT/SEC
                             - =        -4.68750 FT/SEC
    MAXIMUM CLOSING VELOCITY (REAR)+ =          5.52001 FT/SEC
                             - =        -2.66601 FT/SEC
    MAXIMUM WHEEL ACCELERATION (FRONT)=       178.97308 FT/SEC**2
                               (REAR)=       302.37908 FT/SEC**2


    LOADED VEHICLE


    CALCULATED RMS=          38.416 INCHES
    ABSORBED POWER=         6.30657 WATTS
    DAMPER ENERGY (FRONT)=    37500.00000 FT-LB   =       679.73168 FT-LB/SEC
                  (REAR)=   -33984.37500 FT-LB   =      -616.00695 FT-LB/SEC
    MAXIMUM CLOSING VELOCITY (FRONT)+ =          5.05126 FT/SEC
                             - =        -4.62402 FT/SEC
    MAXIMUM CLOSING VELOCITY (REAR)+ =          5.02929 FT/SEC
                             - =        -4.16992 FT/SEC
    MAXIMUM WHEEL ACCELERATION (FRONT)=       187.21978 FT/SEC**2
                               (REAR)=       277.24627 FT/SEC**2
```

```
RUN TO ---   TERRAIN ID  100%   2.0     VEL=  45.000 MPH
    OVER  2831.99 FEET OF TERRAIN IN   42.909 SECONDS


    EMPTY VEHICLE


    CALCULATED RMS=          44.262 INCHES
    ABSORBED POWER=        10.26012 WATTS
    DAMPER ENERGY (FRONT)=    26708.98437 FT-LB   =       622.45520 FT-LB/SEC
                  (REAR)=   -34545.89843 FT-LB   =      -805.09533 FT-LB/SEC
    MAXIMUM CLOSING VELOCITY (FRONT)+ =          4.74853 FT/SEC
                                    - =         -5.00000 FT/SEC
    MAXIMUM CLOSING VELOCITY (REAR)+ =          6.89697 FT/SEC
                                    - =         -2.33886 FT/SEC
    MAXIMUM WHEEL ACCELERATION (FRONT)=       202.14236 FT/SEC**2
                               (REAR)=       379.74102 FT/SEC**2


    LOADED VEHICLE


    CALCULATED RMS=          45.056 INCHES
    ABSORBED POWER=         7.65087 WATTS
    DAMPER ENERGY (FRONT)=    37890.62500 FT-LB   =       883.04443 FT-LB/SEC
                  (REAR)=   -35449.21875 FT-LB   =      -826.14733 FT-LB/SEC
    MAXIMUM CLOSING VELOCITY (FRONT)+ =          5.18066 FT/SEC
                                    - =         -4.96826 FT/SEC
    MAXIMUM CLOSING VELOCITY (REAR)+ =          5.58105 FT/SEC
                                    - =         -4.30175 FT/SEC
    MAXIMUM WHEEL ACCELERATION (FRONT)=       206.75659 FT/SEC**2
                               (REAR)=       352.05566 FT/SEC**2
```

```
RUN TO ---  TERRAIN ID  100%   2.0     VEL=  55.000 MPH
    OVER  2831.99 FEET OF TERRAIN IN   35.107 SECONDS


    EMPTY VEHICLE


    CALCULATED RMS=          48.994 INCHES
    ABSORBED POWER=        39.57250 WATTS
    DAMPER ENERGY (FRONT)=    19042.96875 FT-LB   =       542.41979 FT-LB/SEC
                  (REAR)=   -35009.76562 FT-LB   =      -997.21826 FT-LB/SEC
    MAXIMUM CLOSING VELOCITY (FRONT)+ =          5.90576 FT/SEC
                                    - =         -5.09521 FT/SEC
    MAXIMUM CLOSING VELOCITY (REAR)+ =          5.71289 FT/SEC
                                    - =         -2.34375 FT/SEC
    MAXIMUM WHEEL ACCELERATION (FRONT)=        239.74340 FT/SEC**2
                               (REAR)=        345.57611 FT/SEC**2


    LOADED VEHICLE


    CALCULATED RMS=          48.948 INCHES
    ABSORBED POWER=        28.23583 WATTS
    DAMPER ENERGY (FRONT)=    35937.50000 FT-LB   =      1023.64367 FT-LB/SEC
                  (REAR)=   -34960.93750 FT-LB   =      -995.82739 FT-LB/SEC
    MAXIMUM CLOSING VELOCITY (FRONT)+ =          5.69580 FT/SEC
                                    - =         -5.05371 FT/SEC
    MAXIMUM CLOSING VELOCITY (REAR)+ =          7.00195 FT/SEC
                                    - =         -4.49707 FT/SEC
    MAXIMUM WHEEL ACCELERATION (FRONT)=        244.94668 FT/SEC**2
                               (REAR)=        358.33886 FT/SEC**2
```

```
RUN TO ---  TERRAIN ID  125%  TF=2.0  VEL=  10.000 MPH
    OVER  2831.99 FEET OF TERRAIN IN  193.090 SECONDS


    EMPTY VEHICLE


    CALCULATED RMS=          15.673 INCHES
    ABSORBED POWER=         3.38366 WATTS
    DAMPER ENERGY (FRONT)=    17822.26562 FT-LB  =        92.29988 FT-LB/SEC
                  (REAR)=   -19580.07812 FT-LB  =      -101.40344 FT-LB/SEC
    MAXIMUM CLOSING VELOCITY (FRONT)+ =        2.02148 FT/SEC
                                    - =       -2.01416 FT/SEC
    MAXIMUM CLOSING VELOCITY (REAR)+ =         2.44140 FT/SEC
                                    - =       -1.68945 FT/SEC
    MAXIMUM WHEEL ACCELERATION (FRONT)=        69.40974 FT/SEC**2
                               (REAR)=       118.79177 FT/SEC**2


    LOADED VEHICLE


    CALCULATED RMS=          15.669 INCHES
    ABSORBED POWER=         1.92333 WATTS
    DAMPER ENERGY (FRONT)=    21997.07031 FT-LB  =       113.92080 FT-LB/SEC
                  (REAR)=   -19335.93750 FT-LB  =      -100.13905 FT-LB/SEC
    MAXIMUM CLOSING VELOCITY (FRONT)+ =        2.01904 FT/SEC
                                    - =       -2.01660 FT/SEC
    MAXIMUM CLOSING VELOCITY (REAR)+ =         2.22656 FT/SEC
                                    - =       -2.08984 FT/SEC
    MAXIMUM WHEEL ACCELERATION (FRONT)=        72.45317 FT/SEC**2
                               (REAR)=        89.53562 FT/SEC**2
```

```
RUN ID ---   TERRAIN ID   125%  2.0      VEL=  25.000 MPH
    OVER  2831.99 FEET OF TERRAIN IN    77.236 SECONDS


    EMPTY VEHICLE


    CALCULATED RMS=          28.832 INCHES
    ABSORBED POWER=         4.94518 WATTS
    DAMPER ENERGY (FRONT)=    31787.10937 FT-LB   =       411.55633 FT-LB/SEC
                  (REAR)=   -37695.31250 FT-LB   =      -488.05151 FT-LB/SEC
    MAXIMUM CLOSING VELOCITY (FRONT)+ =        3.26904 FT/SEC
                                    - =       -3.74511 FT/SEC
    MAXIMUM CLOSING VELOCITY (REAR)+ =         4.16015 FT/SEC
                                    - =       -2.02636 FT/SEC
    MAXIMUM WHEEL ACCELERATION (FRONT)=      136.65963 FT/SEC**2
                               (REAR)=      208.22921 FT/SEC**2


    LOADED VEHICLE


    CALCULATED RMS=          28.452 INCHES
    ABSORBED POWER=         4.48663 WATTS
    DAMPER ENERGY (FRONT)=    41577.14843 FT-LB   =       538.31066 FT-LB/SEC
                  (REAR)=   -36962.89062 FT-LB   =      -478.56866 FT-LB/SEC
    MAXIMUM CLOSING VELOCITY (FRONT)+ =        3.38378 FT/SEC
                                    - =       -3.68652 FT/SEC
    MAXIMUM CLOSING VELOCITY (REAR)+ =         4.43847 FT/SEC
                                    - =       -3.18359 FT/SEC
    MAXIMUM WHEEL ACCELERATION (FRONT)=      135.38336 FT/SEC**2
                               (REAR)=      195.56466 FT/SEC**2
```

```
RUN TO ---  TERRAIN ID  125%   2.0     VEL=  35.000 MPH
    OVER  2831.99 FEET OF TERRAIN IN   55.168 SECONDS


    EMPTY VEHICLE


    CALCULATED RMS=          34.616 INCHES
    ABSORBED POWER=        9.52898 WATTS
    DAMPER ENERGY (FRONT)=    30615.23437 FT-LB   =       554.93713 FT-LB/SEC
                  (REAR)=   -36230.46875 FT-LB   =      -656.72009 FT-LB/SEC
    MAXIMUM CLOSING VELOCITY (FRONT)+ =         4.59716 FT/SEC
                                    - =        -3.92578 FT/SEC
    MAXIMUM CLOSING VELOCITY (REAR)+ =          5.01464 FT/SEC
                                    - =        -2.09716 FT/SEC
    MAXIMUM WHEEL ACCELERATION (FRONT)=       166.70120 FT/SEC**2
                               (REAR)=       300.41558 FT/SEC**2


    LOADED VEHICLE


    CALCULATED RMS=          34.598 INCHES
    ABSORBED POWER=        6.81207 WATTS
    DAMPER ENERGY (FRONT)=    39404.29687 FT-LB   =       714.24926 FT-LB/SEC
                  (REAR)=   -36621.09375 FT-LB   =      -663.80053 FT-LB/SEC
    MAXIMUM CLOSING VELOCITY (FRONT)+ =         4.60937 FT/SEC
                                    - =        -3.82812 FT/SEC
    MAXIMUM CLOSING VELOCITY (REAR)+ =          4.35546 FT/SEC
                                    - =        -3.40087 FT/SEC
    MAXIMUM WHEEL ACCELERATION (FRONT)=       170.72637 FT/SEC**2
                               (REAR)=       254.27331 FT/SEC**2
```

```
RUN ID ---  TERRAIN ID  125%   2.0     VEL=  45.000 MPH
    OVER  2831.99 FEET OF TERRAIN IN   42.909 SECONDS


    EMPTY VEHICLE


    CALCULATED RMS=          39.482 INCHES
    ABSORBED POWER=        12.60595 WATTS
    DAMPER ENERGY (FRONT)=    25146.48437 FT-LB   =       586.04101 FT-LB/SEC
                  (REAR)=   -35595.70312 FT-LB   =      -829.56115 FT-LB/SEC
    MAXIMUM CLOSING VELOCITY (FRONT)+ =          4.43603 FT/SEC
                                    - =         -4.22363 FT/SEC
    MAXIMUM CLOSING VELOCITY (REAR)+ =          5.46386 FT/SEC
                                    - =         -1.80419 FT/SEC
    MAXIMUM WHEEL ACCELERATION (FRONT)=       190.26321 FT/SEC**2
                               (REAR)=        304.53894 FT/SEC**2


    LOADED VEHICLE


    CALCULATED RMS=          40.626 INCHES
    ABSORBED POWER=         9.25671 WATTS
    DAMPER ENERGY (FRONT)=    38378.90625 FT-LB   =       894.42382 FT-LB/SEC
                  (REAR)=   -36791.99218 FT-LB   =      -857.44079 FT-LB/SEC
    MAXIMUM CLOSING VELOCITY (FRONT)+ =          4.96582 FT/SEC
                                    - =         -4.22363 FT/SEC
    MAXIMUM CLOSING VELOCITY (REAR)+ =          5.61767 FT/SEC
                                    - =         -3.56445 FT/SEC
    MAXIMUM WHEEL ACCELERATION (FRONT)=       183.29278 FT/SEC**2
                               (REAR)=        298.45208 FT/SEC**2
```

```
RUN ID ---   TERRAIN ID   125%    2.0      VEL=   55.000 MPH
    OVER  2831.99 FEET OF TERRAIN IN    35.107 SECONDS


    EMPTY VEHICLE


    CALCULATED RMS=          43.627 INCHES
    ABSORBED POWER=        46.04436 WATTS
    DAMPER ENERGY (FRONT)=     17382.81250 FT-LB   =       495.13201 FT-LB/SEC
                  (REAR)=    -33837.89062 FT-LB   =      -963.83850 FT-LB/SEC
    MAXIMUM CLOSING VELOCITY (FRONT)+ =          5.02929 FT/SEC
                                    - =         -4.32128 FT/SEC
    MAXIMUM CLOSING VELOCITY (REAR)+ =          4.55566 FT/SEC
                                    - =         -1.82128 FT/SEC
    MAXIMUM WHEEL ACCELERATION (FRONT)=        214.61059 FT/SEC**2
                               (REAR)=        287.16192 FT/SEC**2


    LOADED VEHICLE


    CALCULATED RMS=          44.185 INCHES
    ABSORBED POWER=        34.18224 WATTS
    DAMPER ENERGY (FRONT)=     35156.25000 FT-LB   =      1001.39050 FT-LB/SEC
                  (REAR)=    -34863.28125 FT-LB   =      -993.04577 FT-LB/SEC
    MAXIMUM CLOSING VELOCITY (FRONT)+ =          4.78515 FT/SEC
                                    - =         -4.31152 FT/SEC
    MAXIMUM CLOSING VELOCITY (REAR)+ =          6.32812 FT/SEC
                                    - =         -3.72314 FT/SEC
    MAXIMUM WHEEL ACCELERATION (FRONT)=        220.99197 FT/SEC**2
                               (REAR)=        294.52508 FT/SEC**2
```

```
RUN ID ---  TERRAIN ID  150%  TF<2.0  VEL=  10.000 MPH
    OVER  2831.99 FEET OF TERRAIN IN  193.090 SECONDS


    EMPTY VEHICLE


    CALCULATED RMS=          15.058 INCHES
    ABSORBED POWER=        4.31799 WATTS
    DAMPER ENERGY (FRONT)=     19189.45312 FT-LB   =        99.38041 FT-LB/SEC
                  (REAR)=    -20947.26562 FT-LB   =      -108.48397 FT-LB/SEC
    MAXIMUM CLOSING VELOCITY (FRONT)+ =        1.86523 FT/SEC
                                    - =       -1.91894 FT/SEC
    MAXIMUM CLOSING VELOCITY (REAR)+ =         2.55859 FT/SEC
                                    - =       -1.44531 FT/SEC
    MAXIMUM WHEEL ACCELERATION (FRONT)=       75.69294 FT/SEC**2
                               (REAR)=       122.81695 FT/SEC**2


    LOADED VEHICLE


    CALCULATED RMS=          15.033 INCHES
    ABSORBED POWER=        2.64556 WATTS
    DAMPER ENERGY (FRONT)=     23339.84375 FT-LB   =       120.87490 FT-LB/SEC
                  (REAR)=    -20581.05468 FT-LB   =      -106.58740 FT-LB/SEC
    MAXIMUM CLOSING VELOCITY (FRONT)+ =        1.85546 FT/SEC
                                    - =       -1.86035 FT/SEC
    MAXIMUM CLOSING VELOCITY (REAR)+ =         2.08007 FT/SEC
                                    - =       -1.88964 FT/SEC
    MAXIMUM WHEEL ACCELERATION (FRONT)=       87.76847 FT/SEC**2
                               (REAR)=       88.75022 FT/SEC**2
```

```
RUN TO ---  TERRAIN ID  150%  2.0      VEL=  25.000 MPH
    OVER  2831.99 FEET OF TERRAIN IN   77.236 SECONDS


    EMPTY VEHICLE


    CALCULATED RMS=          26.397 INCHES
    ABSORBED POWER=         6.85620 WATTS
    DAMPER ENERGY (FRONT)=     32031.25000 FT-LB   =       414.71728 FT-LB/SEC
                  (REAR)=    -38623.04687 FT-LB   =      -500.06317 FT-LB/SEC
    MAXIMUM CLOSING VELOCITY (FRONT)+ =         2.99560 FT/SEC
                                    - =        -3.17626 FT/SEC
    MAXIMUM CLOSING VELOCITY (REAR)+ =          3.65234 FT/SEC
                                    - =        -1.70898 FT/SEC
    MAXIMUM WHEEL ACCELERATION (FRONT)=       124.28958 FT/SEC**2
                               (REAR)=       200.08071 FT/SEC**2


    LOADED VEHICLE


    CALCULATED RMS=          26.219 INCHES
    ABSORBED POWER=         4.81329 WATTS
    DAMPER ENERGY (FRONT)=     44335.93750 FT-LB   =       574.02941 FT-LB/SEC
                  (REAR)=    -38427.73437 FT-LB   =      -497.53436 FT-LB/SEC
    MAXIMUM CLOSING VELOCITY (FRONT)+ =         2.93457 FT/SEC
                                    - =        -3.13964 FT/SEC
    MAXIMUM CLOSING VELOCITY (REAR)+ =          4.09179 FT/SEC
                                    - =        -2.74902 FT/SEC
    MAXIMUM WHEEL ACCELERATION (FRONT)=       124.38775 FT/SEC**2
                               (REAR)=       165.91580 FT/SEC**2
```

```
RUN ID ---  TERRAIN ID  150$  2.0      VEL=  35.000 MPH
    OVER  2831.99 FEET OF TERRAIN IN   55.168 SECONDS


    EMPTY VEHICLE


    CALCULATED RMS=          32.343 INCHES
    ABSORBED POWER=        11.32397 WATTS
    DAMPER ENERGY (FRONT)=     29882.81250 FT-LB   =       541.66113 FT-LB/SEC
                  (REAR)=    -39013.67187 FT-LB   =      -707.16894 FT-LB/SEC
    MAXIMUM CLOSING VELOCITY (FRONT)+ =          4.40917 FT/SEC
                                    - =         -3.33984 FT/SEC
    MAXIMUM CLOSING VELOCITY (REAR)+ =          4.07714 FT/SEC
                                    - =         -1.70898 FT/SEC
    MAXIMUM WHEEL ACCELERATION (FRONT)=        151.87677 FT/SEC**2
                               (REAR)=        289.02728 FT/SEC**2


    LOADED VEHICLE


    CALCULATED RMS=          31.935 INCHES
    ABSORBED POWER=         8.36545 WATTS
    DAMPER ENERGY (FRONT)=     39916.99218 FT-LB   =       723.54248 FT-LB/SEC
                  (REAR)=    -38793.94531 FT-LB   =      -703.18603 FT-LB/SEC
    MAXIMUM CLOSING VELOCITY (FRONT)+ =          4.46289 FT/SEC
                                    - =         -3.32031 FT/SEC
    MAXIMUM CLOSING VELOCITY (REAR)+ =          4.07226 FT/SEC
                                    - =         -2.86621 FT/SEC
    MAXIMUM WHEEL ACCELERATION (FRONT)=        154.03562 FT/SEC**2
                               (REAR)=        227.96240 FT/SEC**2
```

```
RUN ID ---  TERRAIN ID  150%   2.0     VEL=  45.000 MPH
    OVER  2831.99 FEET OF TERRAIN IN   42.909 SECONDS


    EMPTY VEHICLE


    CALCULATED RMS=          35.312 INCHES
    ABSORBED POWER=        14.57397 WATTS
    DAMPER ENERGY (FRONT)=    23852.53906 FT-LB   =      555.88549 FT-LB/SEC
                  (REAR)=   -35864.25781 FT-LB   =     -835.81982 FT-LB/SEC
    MAXIMUM CLOSING VELOCITY (FRONT)+ =        4.10400 FT/SEC
                             - =       -3.61083 FT/SEC
    MAXIMUM CLOSING VELOCITY (REAR)+ =         4.39941 FT/SEC
                             - =       -1.53076 FT/SEC
    MAXIMUM WHEEL ACCELERATION (FRONT)=      169.94097 FT/SEC**2
                               (REAR)=      265.07257 FT/SEC**2


    LOADED VEHICLE


    CALCULATED RMS=          35.496 INCHES
    ABSORBED POWER=        10.31768 WATTS
    DAMPER ENERGY (FRONT)=    37719.72656 FT-LB   =      879.06152 FT-LB/SEC
                  (REAR)=   -35888.67187 FT-LB   =     -836.38879 FT-LB/SEC
    MAXIMUM CLOSING VELOCITY (FRONT)+ =        4.37255 FT/SEC
                             - =       -3.56445 FT/SEC
    MAXIMUM CLOSING VELOCITY (REAR)+ =         5.35644 FT/SEC
                             - =       -3.00781 FT/SEC
    MAXIMUM WHEEL ACCELERATION (FRONT)=      176.22418 FT/SEC**2
                               (REAR)=      262.52001 FT/SEC**2
```

```
RUN ID ---  TERRAIN ID  150%   2.0     VEL=  55.000 MPH
    OVER  2831.99 FEET OF TERRAIN IN   35.107 SECONDS


    EMPTY VEHICLE


    CALCULATED RMS=          38.183 INCHES
    ABSORBED POWER=        28.96783 WATTS
    DAMPER ENERGY (FRONT)=    15308.59375 FT-LB   =       464.53393 FT-LB/SEC
                  (REAR)=   -32421.87500 FT-LB   =      -923.50476 FT-LB/SEC
    MAXIMUM CLOSING VELOCITY (FRONT)+ =          4.33593 FT/SEC
                                    - =         -3.70605 FT/SEC
    MAXIMUM CLOSING VELOCITY (REAR)+ =          4.16992 FT/SEC
                                    - =         -1.49414 FT/SEC
    MAXIMUM WHEEL ACCELERATION (FRONT)=        194.77926 FT/SEC**2
                               (REAR)=        262.71636 FT/SEC**2


    LOADED VEHICLE


    CALCULATED RMS=          38.277 INCHES
    ABSORBED POWER=        14.40801 WATTS
    DAMPER ENERGY (FRONT)=    33056.64062 FT-LB   =       941.58532 FT-LB/SEC
                  (REAR)=   -32983.39843 FT-LB   =      -939.49914 FT-LB/SEC
    MAXIMUM CLOSING VELOCITY (FRONT)+ =          4.08447 FT/SEC
                                    - =         -3.66699 FT/SEC
    MAXIMUM CLOSING VELOCITY (REAR)+ =          5.75683 FT/SEC
                                    - =         -3.10302 FT/SEC
    MAXIMUM WHEEL ACCELERATION (FRONT)=        207.34564 FT/SEC**2
                               (REAR)=        264.26717 FT/SEC**2
```

OPTIMAL DAMPING

```
RUN ID ---  TERRAIN ID  OPT  TF=2.0   VEL=  19.000 MPH
    OVER  2831.99 FEET OF TERRAIN IN  101.626 SECONDS


    EMPTY VEHICLE


    CALCULATED RMS=          1.940 INCHES
    ABSORBED POWER=        5.84637 WATTS
    DAMPER ENERGY (FRONT)=    33007.81250 FT-LB   =       324.79443 FT-LB/SEC
                  (REAR)=     26416.01562 FT-LB   =       259.93164 FT-LB/SEC
    MAXIMUM CLOSING VELOCITY (FRONT)+ =        6.10351 FT/SEC
                             - =              -8.74755 FT/SEC
    MAXIMUM CLOSING VELOCITY (REAR)+ =         6.29882 FT/SEC
                             - =              -5.30273 FT/SEC
    MAXIMUM WHEEL ACCELERATION (FRONT)=      268.11596 FT/SEC**2
                               (REAR)=       297.27398 FT/SEC**2


    LOADED VEHICLE


    CALCULATED RMS=          1.936 INCHES
    ABSORBED POWER=        3.06402 WATTS
    DAMPER ENERGY (FRONT)=    32177.73437 FT-LB   =       316.62652 FT-LB/SEC
                  (REAR)=     28027.34375 FT-LB   =       275.78698 FT-LB/SEC
    MAXIMUM CLOSING VELOCITY (FRONT)+ =        5.82519 FT/SEC
                             - =              -8.46679 FT/SEC
    MAXIMUM CLOSING VELOCITY (REAR)+ =         6.87988 FT/SEC
                             - =              -5.48583 FT/SEC
    MAXIMUM WHEEL ACCELERATION (FRONT)=      268.90136 FT/SEC**2
                               (REAR)=       332.02795 FT/SEC**2
```

```
RUN ID ---  TERRAIN ID  OPT   2.0      VEL=  20.000 MPH
    OVER  2831.99 FEET OF TERRAIN IN   96.545 SECONDS


    EMPTY VEHICLE


    CALCULATED RMS=          1.933 INCHES
    ABSORBED POWER=        6.04681 WATTS
    DAMPER ENERGY (FRONT)=    31958.00781 FT-LB   =       331.01513 FT-LB/SEC
                  (REAR)=     26220.70312 FT-LB   =       271.58923 FT-LB/SEC
    MAXIMUM CLOSING VELOCITY (FRONT)+ =        6.34033 FT/SEC
                             - =        -8.54736 FT/SEC
    MAXIMUM CLOSING VELOCITY (REAR)+ =         6.54541 FT/SEC
                             - =        -5.76660 FT/SEC
    MAXIMUM WHEEL ACCELERATION (FRONT)=       277.54077 FT/SEC**2
                               (REAR)=       331.63525 FT/SEC**2


    LOADED VEHICLE


    CALCULATED RMS=          1.946 INCHES
    ABSORBED POWER=        3.08752 WATTS
    DAMPER ENERGY (FRONT)=    31787.10937 FT-LB   =       329.24505 FT-LB/SEC
                  (REAR)=     27368.16406 FT-LB   =       283.47442 FT-LB/SEC
    MAXIMUM CLOSING VELOCITY (FRONT)+ =        6.16210 FT/SEC
                             - =        -8.34472 FT/SEC
    MAXIMUM CLOSING VELOCITY (REAR)+ =         7.23876 FT/SEC
                             - =        -5.52246 FT/SEC
    MAXIMUM WHEEL ACCELERATION (FRONT)=       269.39227 FT/SEC**2
                               (REAR)=       338.80200 FT/SEC**2
```

```
RUN ID ---  TERRAIN ID  OPT  TF=2.0   VEL=  19.000 MPH
    OVER  2831.99 FEET OF TERRAIN IN  101.626 SECONDS


    EMPTY VEHICLE


    CALCULATED RMS=          1.940 INCHES
    ABSORBED POWER=        5.84637 WATTS
    DAMPER ENERGY (FRONT)=     33007.81250 FT-LB   =        324.79443 FT-LB/SEC
                  (REAR)=      26416.01562 FT-LB   =        259.93164 FT-LB/SEC
    MAXIMUM CLOSING VELOCITY (FRONT)+ =        6.10351 FT/SEC
                             - =          -8.74755 FT/SEC
    MAXIMUM CLOSING VELOCITY (REAR)+ =         6.29882 FT/SEC
                             - =          -5.30273 FT/SEC
    MAXIMUM WHEEL ACCELERATION (FRONT)=      268.11596 FT/SEC**2
                               (REAR)=       297.27398 FT/SEC**2


    LOADED VEHICLE


    CALCULATED RMS=          1.938 INCHES
    ABSORBED POWER=        3.86402 WATTS
    DAMPER ENERGY (FRONT)=     32177.73437 FT-LB   =        316.62652 FT-LB/SEC
                  (REAR)=      28027.34375 FT-LB   =        275.78698 FT-LB/SEC
    MAXIMUM CLOSING VELOCITY (FRONT)+ =        5.82519 FT/SEC
                             - =          -8.46679 FT/SEC
    MAXIMUM CLOSING VELOCITY (REAR)+ =         6.87988 FT/SEC
                             - =          -5.48583 FT/SEC
    MAXIMUM WHEEL ACCELERATION (FRONT)=      268.90136 FT/SEC**2
                               (REAR)=       332.02795 FT/SEC**2
```

```
RUN ID ---  TERRAIN ID  OPT   2.0      VEL=  20.000 MPH
    OVER  2831.99 FEET OF TERRAIN IN   96.545 SECONDS


    EMPTY VEHICLE


    CALCULATED RMS=          1.933 INCHES
    ABSORBED POWER=        5.04681 WATTS
    DAMPER ENERGY (FRONT)=    31958.00781 FT-LB   =       331.01513 FT-LB/SEC
                  (REAR)=     26220.70312 FT-LB   =       271.58923 FT-LB/SEC
    MAXIMUM CLOSING VELOCITY (FRONT)+ =        6.34033 FT/SEC
                             - =          -8.54736 FT/SEC
    MAXIMUM CLOSING VELOCITY (REAR)+ =         6.54541 FT/SEC
                             - =          -5.76660 FT/SEC
    MAXIMUM WHEEL ACCELERATION (FRONT)=      277.54077 FT/SEC**2
                               (REAR)=       331.63525 FT/SEC**2


    LOADED VEHICLE


    CALCULATED RMS=          1.946 INCHES
    ABSORBED POWER=        3.08252 WATTS
    DAMPER ENERGY (FRONT)=    31787.10937 FT-LB   =       329.24505 FT-LB/SEC
                  (REAR)=     27368.16406 FT-LB   =       283.47442 FT-LB/SEC
    MAXIMUM CLOSING VELOCITY (FRONT)+ =        6.16210 FT/SEC
                             - =          -8.34472 FT/SEC
    MAXIMUM CLOSING VELOCITY (REAR)+ =         7.23876 FT/SEC
                             - =          -5.52246 FT/SEC
    MAXIMUM WHEEL ACCELERATION (FRONT)=      269.39227 FT/SEC**2
                               (REAR)=       338.80200 FT/SEC**2
```

ADAPTIVE FLUIDIC DAMPING

```
RUN ID ---  TERRAIN ID  RD10  TF=2.0  VEL=  16.000 MPH
    OVER  2831.99 FEET OF TERRAIN IN  120.681 SECONDS


    EMPTY VEHICLE


    CALCULATED RMS=            1.938 INCHES
    ABSORBED POWER=          5.99590 WATTS
    DAMPER ENERGY (FRONT)=     31884.76562 FT-LB  =       264.20520 FT-LB/SEC
                  (REAR)=      27392.57812 FT-LB  =       226.98181 FT-LB/SEC
    MAXIMUM CLOSING VELOCITY (FRONT)+ =          4.87792 FT/SEC
                                    - =         -6.38671 FT/SEC
    MAXIMUM CLOSING VELOCITY (REAR)+ =          4.56542 FT/SEC
                                    - =         -3.97460 FT/SEC
    MAXIMUM WHEEL ACCELERATION (FRONT)=        201.06246 FT/SEC**2
                               (REAR)=         232.87115 FT/SEC**2


    LOADED VEHICLE


    CALCULATED RMS=            1.941 INCHES
    ABSORBED POWER=          3.34478 WATTS
    DAMPER ENERGY (FRONT)=     31127.92968 FT-LB  =       257.93389 FT-LB/SEC
                  (REAR)=      33740.23437 FT-LB  =       279.58007 FT-LB/SEC
    MAXIMUM CLOSING VELOCITY (FRONT)+ =          4.77783 FT/SEC
                                    - =         -6.31835 FT/SEC
    MAXIMUM CLOSING VELOCITY (REAR)+ =          5.84472 FT/SEC
                                    - =         -5.51757 FT/SEC
    MAXIMUM WHEEL ACCELERATION (FRONT)=        201.16061 FT/SEC**2
                               (REAR)=         293.44512 FT/SEC**2
```

```
RUN ID ---  TERRAIN ID  RD10  TF=2.0  VEL=  29.000 MPH
    OVER  2831.99 FEET OF TERRAIN IN   66.583 SECONDS


    EMPTY VEHICLE


    CALCULATED RMS=            1.940 INCHES
    ABSORBED POWER=          9.91503 WATTS
    DAMPER ENERGY (FRONT)=    29541.01562 FT-LB  =       443.67163 FT-LB/SEC
                  (REAR)=     29785.15625 FT-LB  =       447.33837 FT-LB/SEC
    MAXIMUM CLOSING VELOCITY (FRONT)+ =         8.38378 FT/SEC
                                    - =        -7.61474 FT/SEC
    MAXIMUM CLOSING VELOCITY (REAR)+ =          8.18359 FT/SEC
                                    - =        -6.98242 FT/SEC
    MAXIMUM WHEEL ACCELERATION (FRONT)=       248.48098 FT/SEC**2
                               (REAR)=        373.94866 FT/SEC**2


    LOADED VEHICLE


    CALCULATED RMS=            1.938 INCHES
    ABSORBED POWER=          5.98156 WATTS
    DAMPER ENERGY (FRONT)=    29248.04687 FT-LB  =       439.27160 FT-LB/SEC
                  (REAR)=     32373.04687 FT-LB  =       486.20544 FT-LB/SEC
    MAXIMUM CLOSING VELOCITY (FRONT)+ =         8.26660 FT/SEC
                                    - =        -7.61474 FT/SEC
    MAXIMUM CLOSING VELOCITY (REAR)+ =          7.08007 FT/SEC
                                    - =        -7.16552 FT/SEC
    MAXIMUM WHEEL ACCELERATION (FRONT)=       263.89447 FT/SEC**2
                               (REAR)=        377.97387 FT/SEC**2
```

```
RUN ID ---  TERRAIN ID  RD10  TF=2.0  VEL=  30.000 MPH
    OVER  2831.99 FEET OF TERRAIN IN   64.363 SECONDS


    EMPTY VEHICLE


    CALCULATED RMS=            1.940 INCHES
    ABSORBED POWER=         10.33239 WATTS
    DAMPER ENERGY (FRONT)=     29174.80468 FT-LB   =       453.28094 FT-LB/SEC
                  (REAR)=      29736.32812 FT-LB   =       462.00518 FT-LB/SEC
    MAXIMUM CLOSING VELOCITY (FRONT)+ =          8.77929 FT/SEC
                                     - =         -7.87597 FT/SEC
    MAXIMUM CLOSING VELOCITY (REAR)+ =           8.38867 FT/SEC
                                     - =         -7.48291 FT/SEC
    MAXIMUM WHEEL ACCELERATION (FRONT)=        268.90136 FT/SEC**2
                               (REAR)=         389.55853 FT/SEC**2


    LOADED VEHICLE


    CALCULATED RMS=            1.936 INCHES
    ABSORBED POWER=          6.36346 WATTS
    DAMPER ENERGY (FRONT)=     28515.62500 FT-LB   =       443.03948 FT-LB/SEC
                  (REAR)=      32153.32031 FT-LB   =       499.55737 FT-LB/SEC
    MAXIMUM CLOSING VELOCITY (FRONT)+ =          8.54003 FT/SEC
                                     - =         -7.82226 FT/SEC
    MAXIMUM CLOSING VELOCITY (REAR)+ =           6.94824 FT/SEC
                                     - =         -7.41210 FT/SEC
    MAXIMUM WHEEL ACCELERATION (FRONT)=        276.55902 FT/SEC**2
                               (REAR)=         378.17022 FT/SEC**2
```

ADAPTIVE FLUIDIC DAMPING MOD I

OVER 2831.99 FEET OF TERRAIN IN 107.272 SECONDS

EMPTY VEHICLE

```
CALCULATED RMS=            1.934 INCHES
ABSORBED POWER=          5.90399 WATTS
DAMPER ENERGY (FRONT)=     33593.75000 FT-LB  =       313.16210 FT-LB/SEC
              (REAR)=     28344.72656 FT-LB  =       264.23052 FT-LB/SEC
MAXIMUM CLOSING VELOCITY (FRONT)+ =          5.93994 FT/SEC
                                - =         -8.05419 FT/SEC
MAXIMUM CLOSING VELOCITY (REAR)+ =           4.48242 FT/SEC
                                - =         -3.56201 FT/SEC
MAXIMUM WHEEL ACCELERATION (FRONT)=        270.17767 FT/SEC**2
                           (REAR)=         215.00329 FT/SEC**2
```

LOADED VEHICLE

```
CALCULATED RMS=            1.935 INCHES
ABSORBED POWER=          3.92895 WATTS
DAMPER ENERGY (FRONT)=     33496.09375 FT-LB  =       312.25177 FT-LB/SEC
              (REAR)=     33886.71875 FT-LB  =       315.89318 FT-LB/SEC
MAXIMUM CLOSING VELOCITY (FRONT)+ =          5.95947 FT/SEC
                                - =         -7.94921 FT/SEC
MAXIMUM CLOSING VELOCITY (REAR)+ =           5.63720 FT/SEC
                                - =         -5.40039 FT/SEC
MAXIMUM WHEEL ACCELERATION (FRONT)=        259.18206 FT/SEC**2
                           (REAR)=         281.76232 FT/SEC**2
```

```
RUN ID ---  TERRAIN ID  MOD I 2.0      VEL=  19.000 MPH
    OVER  2831.99 FEET OF TERRAIN IN  101.626 SECONDS


    EMPTY VEHICLE


    CALCULATED RMS=            1.935 INCHES
    ABSORBED POWER=          6.08465 WATTS
    DAMPER ENERGY (FRONT)=    33105.46875 FT-LB   =       325.75537 FT-LB/SEC
                  (REAR)=     28637.69531 FT-LB   =       281.79278 FT-LB/SEC
    MAXIMUM CLOSING VELOCITY (FRONT)+ =          5.11230 FT/SEC
                                     - =         -8.28613 FT/SEC
    MAXIMUM CLOSING VELOCITY (REAR)+ =           4.93896 FT/SEC
                                     - =         -3.67919 FT/SEC
    MAXIMUM WHEEL ACCELERATION (FRONT)=         264.18896 FT/SEC**2
                               (REAR)=          212.45074 FT/SEC**2


    LOADED VEHICLE


    CALCULATED RMS=            1.936 INCHES
    ABSORBED POWER=          4.05426 WATTS
    DAMPER ENERGY (FRONT)=    33032.22656 FT-LB   =       325.03466 FT-LB/SEC
                  (REAR)=     33349.60937 FT-LB   =       328.15771 FT-LB/SEC
    MAXIMUM CLOSING VELOCITY (FRONT)+ =          4.90234 FT/SEC
                                     - =         -8.19335 FT/SEC
    MAXIMUM CLOSING VELOCITY (REAR)+ =           5.76416 FT/SEC
                                     - =         -5.41748 FT/SEC
    MAXIMUM WHEEL ACCELERATION (FRONT)=         262.42181 FT/SEC**2
                               (REAR)=          307.09149 FT/SEC**2
```

```
RUN ID ---  TERRAIN ID  MOD I  2.0     VEL=  27.500 MPH
    OVER  2831.99 FEET OF TERRAIN IN   70.214 SECONDS


    EMPTY VEHICLE


    CALCULATED RMS=            1.939 INCHES
    ABSORBED POWER=          8.17260 WATTS
    DAMPER ENERGY (FRONT)=     28613.28125 FT-LB   =       407.51031 FT-LB/SEC
                  (REAR)=     29907.22656 FT-LB   =       425.93865 FT-LB/SEC
    MAXIMUM CLOSING VELOCITY (FRONT)+ =          7.61718 FT/SEC
                                    - =         -7.26074 FT/SEC
    MAXIMUM CLOSING VELOCITY (REAR)+ =           7.55126 FT/SEC
                                    - =         -5.40039 FT/SEC
    MAXIMUM WHEEL ACCELERATION (FRONT)=        257.70941 FT/SEC**2
                               (REAR)=        322.79949 FT/SEC**2


    LOADED VEHICLE


    CALCULATED RMS=            1.930 INCHES
    ABSORBED POWER=          5.65496 WATTS
    DAMPER ENERGY (FRONT)=     28540.03906 FT-LB   =       406.46722 FT-LB/SEC
                  (REAR)=     33129.88281 FT-LB   =       471.83575 FT-LB/SEC
    MAXIMUM CLOSING VELOCITY (FRONT)+ =          7.68798 FT/SEC
                                    - =         -7.03857 FT/SEC
    MAXIMUM CLOSING VELOCITY (REAR)+ =           6.65283 FT/SEC
                                    - =         -6.34521 FT/SEC
    MAXIMUM WHEEL ACCELERATION (FRONT)=        264.18896 FT/SEC**2
                               (REAR)=        336.54400 FT/SEC**2
```

```
RUN ID ---  TERRAIN ID  MOD I 2.0      VEL=  29.000 MPH
    OVER  2831.99 FEET OF TERRAIN IN   66.583 SECONDS


    EMPTY VEHICLE


    CALCULATED RMS=            1.931 INCHES
    ABSORBED POWER=          8.52184 WATTS
    DAMPER ENERGY (FRONT)=     28222.65625 FT-LB   =       423.87145 FT-LB/SEC
                  (REAR)=     30664.06250 FT-LB   =       460.53851 FT-LB/SEC
    MAXIMUM CLOSING VELOCITY (FRONT)+ =         8.05664 FT/SEC
                                     - =        -7.42919 FT/SEC
    MAXIMUM CLOSING VELOCITY (REAR)+ =          7.86376 FT/SEC
                                     - =        -6.30371 FT/SEC
    MAXIMUM WHEEL ACCELERATION (FRONT)=       262.42181 FT/SEC**2
                               (REAR)=        364.62207 FT/SEC**2


    LOADED VEHICLE


    CALCULATED RMS=            1.933 INCHES
    ABSORBED POWER=          6.11535 WATTS
    DAMPER ENERGY (FRONT)=     28198.24218 FT-LB   =       423.50476 FT-LB/SEC
                  (REAR)=     33715.82031 FT-LB   =       506.37237 FT-LB/SEC
    MAXIMUM CLOSING VELOCITY (FRONT)+ =         7.94189 FT/SEC
                                     - =        -7.38769 FT/SEC
    MAXIMUM CLOSING VELOCITY (REAR)+ =          6.76025 FT/SEC
                                     - =        -6.76513 FT/SEC
    MAXIMUM WHEEL ACCELERATION (FRONT)=       276.75537 FT/SEC**2
                               (REAR)=        364.32751 FT/SEC**2
```

ADAPTIVE FLUIDIC DAMPING MOD II

```
RUN ID ---  TERRAIN ID  MOD II  2.0   VEL=  17.000 MPH
    OVER  2831.99 FEET OF TERRAIN IN  113.582 SECONDS


    EMPTY VEHICLE


    CALCULATED RMS=            1.922 INCHES
    ABSORBED POWER=          5.88763 WATTS
    DAMPER ENERGY (FRONT)=    32861.32812 FT-LB  =       289.31585 FT-LB/SEC
                  (REAR)=     27343.75000 FT-LB  =       240.73831 FT-LB/SEC
    MAXIMUM CLOSING VELOCITY (FRONT)+ =          6.61132 FT/SEC
                                     - =         -7.73925 FT/SEC
    MAXIMUM CLOSING VELOCITY (REAR)+ =           4.14550 FT/SEC
                                     - =         -3.64013 FT/SEC
    MAXIMUM WHEEL ACCELERATION (FRONT)=        242.19778 FT/SEC**2
                               (REAR)=         178.28585 FT/SEC**2


    LOADED VEHICLE


    CALCULATED RMS=            1.933 INCHES
    ABSORBED POWER=          3.86498 WATTS
    DAMPER ENERGY (FRONT)=    32812.50000 FT-LB  =       288.88598 FT-LB/SEC
                  (REAR)=     33911.13281 FT-LB  =       298.55847 FT-LB/SEC
    MAXIMUM CLOSING VELOCITY (FRONT)+ =          6.45019 FT/SEC
                                     - =         -7.63183 FT/SEC
    MAXIMUM CLOSING VELOCITY (REAR)+ =           5.64453 FT/SEC
                                     - =         -5.31982 FT/SEC
    MAXIMUM WHEEL ACCELERATION (FRONT)=        243.76858 FT/SEC**2
                               (REAR)=         299.23748 FT/SEC**2
```

```
RUN ID ---  TERRAIN ID  MOD II  2.0   VEL=  18.000 MPH
    OVER  2831.99 FEET OF TERRAIN IN  107.272 SECONDS


    EMPTY VEHICLE


    CALCULATED RMS=            1.921 INCHES
    ABSORBED POWER=          6.23504 WATTS
    DAMPER ENERGY (FRONT)=    33691.40625 FT-LB   =      314.07244 FT-LB/SEC
                  (REAR)=     28320.31250 FT-LB   =      264.00292 FT-LB/SEC
    MAXIMUM CLOSING VELOCITY (FRONT)+ =        5.96679 FT/SEC
                                    - =       -8.05664 FT/SEC
    MAXIMUM CLOSING VELOCITY (REAR)+ =        4.80712 FT/SEC
                                    - =       -3.56933 FT/SEC
    MAXIMUM WHEEL ACCELERATION (FRONT)=      270.07946 FT/SEC**2
                               (REAR)=      214.61059 FT/SEC**2


    LOADED VEHICLE


    CALCULATED RMS=            1.935 INCHES
    ABSORBED POWER=          4.15246 WATTS
    DAMPER ENERGY (FRONT)=    33422.85156 FT-LB   =      311.56896 FT-LB/SEC
                  (REAR)=     33813.47656 FT-LB   =      315.21038 FT-LB/SEC
    MAXIMUM CLOSING VELOCITY (FRONT)+ =        5.98632 FT/SEC
                                    - =       -7.93457 FT/SEC
    MAXIMUM CLOSING VELOCITY (REAR)+ =        5.55175 FT/SEC
                                    - =       -5.30029 FT/SEC
    MAXIMUM WHEEL ACCELERATION (FRONT)=      257.61126 FT/SEC**2
                               (REAR)=      286.27838 FT/SEC**2
```

```
RUN ID ---  TERRAIN ID  MOD II  2.0   VEL=  27.500 MPH
    OVER  2831.99 FEET OF TERRAIN IN   70.214 SECONDS


    EMPTY VEHICLE


    CALCULATED RMS=            1.931 INCHES
    ABSORBED POWER=          8.51678 WATTS
    DAMPER ENERGY (FRONT)=    28344.72656 FT-LB  =       403.68554 FT-LB/SEC
                  (REAR)=     29833.98437 FT-LB  =       424.89556 FT-LB/SEC
    MAXIMUM CLOSING VELOCITY (FRONT)+ =         7.60742 FT/SEC
                                    - =        -7.25097 FT/SEC
    MAXIMUM CLOSING VELOCITY (REAR)+ =          7.57568 FT/SEC
                                    - =        -5.34912 FT/SEC
    MAXIMUM WHEEL ACCELERATION (FRONT)=       257.61126 FT/SEC**2
                               (REAR)=        329.18084 FT/SEC**2


    LOADED VEHICLE


    CALCULATED RMS=            1.930 INCHES
    ABSORBED POWER=          5.91870 WATTS
    DAMPER ENERGY (FRONT)=    28710.93750 FT-LB  =       408.90112 FT-LB/SEC
                  (REAR)=     33129.88281 FT-LB  =       471.83575 FT-LB/SEC
    MAXIMUM CLOSING VELOCITY (FRONT)+ =         7.70507 FT/SEC
                                    - =        -7.22167 FT/SEC
    MAXIMUM CLOSING VELOCITY (REAR)+ =          6.53564 FT/SEC
                                    - =        -6.45263 FT/SEC
    MAXIMUM WHEEL ACCELERATION (FRONT)=       262.42181 FT/SEC**2
                               (REAR)=        338.50750 FT/SEC**2
```

```
RUN ID ---  TERRAIN ID  MOD II  2.0   VEL=  29.000 MPH
    OVER  2831.99 FEET OF TERRAIN IN   66.583 SECONDS


    EMPTY VEHICLE


    CALCULATED RMS=            1.927 INCHES
    ABSORBED POWER=          9.07000 WATTS
    DAMPER ENERGY (FRONT)=     28271.48437 FT-LB  =       424.60479 FT-LB/SEC
                  (REAR)=     30761.71875 FT-LB  =       462.00518 FT-LB/SEC
    MAXIMUM CLOSING VELOCITY (FRONT)+ =         8.93554 FT/SEC
                                     - =       -8.33007 FT/SEC
    MAXIMUM CLOSING VELOCITY (REAR)+ =          8.24462 FT/SEC
                                     - =       -6.89179 FT/SEC
    MAXIMUM WHEEL ACCELERATION (FRONT)=       286.96557 FT/SEC**2
                               (REAR)=        360.10601 FT/SEC**2


    LOADED VEHICLE


    CALCULATED RMS=            1.930 INCHES
    ABSORBED POWER=          6.30389 WATTS
    DAMPER ENERGY (FRONT)=     28173.82812 FT-LB  =       423.13806 FT-LB/SEC
                  (REAR)=     33691.40625 FT-LB  =       506.00567 FT-LB/SEC
    MAXIMUM CLOSING VELOCITY (FRONT)+ =         7.94433 FT/SEC
                                     - =       -7.36328 FT/SEC
    MAXIMUM CLOSING VELOCITY (REAR)+ =          6.89208 FT/SEC
                                     - =       -6.98312 FT/SEC
    MAXIMUM WHEEL ACCELERATION (FRONT)=       271.25756 FT/SEC**2
                               (REAR)=        361.77496 FT/SEC**2
```

ADAPTIVE FLUIDIC DAMPING MOD IIB

```
RUN ID ---  TERRAIN ID  MOD IIB  2.0  VEL=  17.000 MPH
    OVER  2831.99 FEET OF TERRAIN IN  113.582 SECONDS


    EMPTY VEHICLE


    CALCULATED RMS=            1.934 INCHES
    ABSORBED POWER=          5.75323 WATTS
    DAMPER ENERGY (FRONT)=    32690.42968 FT-LB   =       287.81121 FT-LB/SEC
                  (REAR)=     27441.40625 FT-LB   =       241.59808 FT-LB/SEC
    MAXIMUM CLOSING VELOCITY (FRONT)+ =         6.53320 FT/SEC
                                     - =        -7.71728 FT/SEC
    MAXIMUM CLOSING VELOCITY (REAR)+ =          3.96240 FT/SEC
                                     - =        -3.63281 FT/SEC
    MAXIMUM WHEEL ACCELERATION (FRONT)=       241.90325 FT/SEC**2
                               (REAR)=        196.15371 FT/SEC**2


    LOADED VEHICLE


    CALCULATED RMS=            1.920 INCHES
    ABSORBED POWER=          3.82134 WATTS
    DAMPER ENERGY (FRONT)=    32470.70312 FT-LB   =       285.87670 FT-LB/SEC
                  (REAR)=     33642.87812 FT-LB   =       296.19409 FT-LB/SEC
    MAXIMUM CLOSING VELOCITY (FRONT)+ =         6.41113 FT/SEC
                                     - =        -7.60742 FT/SEC
    MAXIMUM CLOSING VELOCITY (REAR)+ =          5.75927 FT/SEC
                                     - =        -5.07812 FT/SEC
    MAXIMUM WHEEL ACCELERATION (FRONT)=       252.01528 FT/SEC**2
                               (REAR)=        271.65026 FT/SEC**2
```

```
RUN ID ---  TERRAIN ID  MOD IIB  2.0  VEL=  18.000 MPH
    OVER  2831.99 FEET OF TERRAIN IN  107.272 SECONDS


    EMPTY VEHICLE


    CALCULATED RMS=            1.934 INCHES
    ABSORBED POWER=          6.08410 WATTS
    DAMPER ENERGY (FRONT)=    33398.43750 FT-LB  =      311.34143 FT-LB/SEC
                  (REAR)=     28320.31250 FT-LB  =      264.00292 FT-LB/SEC
    MAXIMUM CLOSING VELOCITY (FRONT)+ =        5.93994 FT/SEC
                                    - =       -8.01269 FT/SEC
    MAXIMUM CLOSING VELOCITY (REAR)+ =         4.59960 FT/SEC
                                    - =       -3.54492 FT/SEC
    MAXIMUM WHEEL ACCELERATION (FRONT)=      273.22106 FT/SEC**2
                               (REAR)=       214.21789 FT/SEC**2


    LOADED VEHICLE


    CALCULATED RMS=            1.922 INCHES
    ABSORBED POWER=          4.08929 WATTS
    DAMPER ENERGY (FRONT)=    33422.85156 FT-LB  =      311.56896 FT-LB/SEC
                  (REAR)=     34057.61718 FT-LB  =      317.48632 FT-LB/SEC
    MAXIMUM CLOSING VELOCITY (FRONT)+ =        5.94726 FT/SEC
                                    - =       -7.91992 FT/SEC
    MAXIMUM CLOSING VELOCITY (REAR)+ =         5.54931 FT/SEC
                                    - =       -5.37109 FT/SEC
    MAXIMUM WHEEL ACCELERATION (FRONT)=      254.76419 FT/SEC**2
                               (REAR)=       276.06817 FT/SEC**2
```

```
RUN ID ---  TERRAIN ID  MOD IIB  2.0  VEL=  27.500 MPH
    OVER  2831.99 FEET OF TERRAIN IN   70.214 SECONDS


    EMPTY VEHICLE


    CALCULATED RMS=            1.928 INCHES
    ABSORBED POWER=          8.17657 WATTS
    DAMPER ENERGY (FRONT)=     28173.82812 FT-LB  =       401.25164 FT-LB/SEC
                  (REAR)=     29907.22656 FT-LB  =       425.93865 FT-LB/SEC
    MAXIMUM CLOSING VELOCITY (FRONT)+ =         7.55859 FT/SEC
                                     - =        -7.25341 FT/SEC
    MAXIMUM CLOSING VELOCITY (REAR)+ =          7.46337 FT/SEC
                                     - =        -5.33203 FT/SEC
    MAXIMUM WHEEL ACCELERATION (FRONT)=       261.04736 FT/SEC**2
                               (REAR)=        325.35205 FT/SEC**2


    LOADED VEHICLE


    CALCULATED RMS=            1.931 INCHES
    ABSORBED POWER=          5.71227 WATTS
    DAMPER ENERGY (FRONT)=     28369.14062 FT-LB  =       404.03326 FT-LB/SEC
                  (REAR)=     33251.95312 FT-LB  =       473.57427 FT-LB/SEC
    MAXIMUM CLOSING VELOCITY (FRONT)+ =         7.67089 FT/SEC
                                     - =        -7.02880 FT/SEC
    MAXIMUM CLOSING VELOCITY (REAR)+ =          6.60400 FT/SEC
                                     - =        -6.56250 FT/SEC
    MAXIMUM WHEEL ACCELERATION (FRONT)=       262.61816 FT/SEC**2
                               (REAR)=        333.50054 FT/SEC**2
```

```
RUN ID ---  TERRAIN ID  MOD IIB 2.0   VEL=  29.000 MPH
    OVER  2831.99 FEET OF TERRAIN IN   66.583 SECONDS


    EMPTY VEHICLE


    CALCULATED RMS=            1.933 INCHES
    ABSORBED POWER=          8.88146 WATTS
    DAMPER ENERGY (FRONT)=    28222.65625 FT-LB   =      423.87145 FT-LB/SEC
                  (REAR)=     30859.37500 FT-LB   =      463.47186 FT-LB/SEC
    MAXIMUM CLOSING VELOCITY (FRONT)+ =        8.01269 FT/SEC
                                     - =       -7.41699 FT/SEC
    MAXIMUM CLOSING VELOCITY (REAR)+ =         7.90283 FT/SEC
                                     - =       -6.28662 FT/SEC
    MAXIMUM WHEEL ACCELERATION (FRONT)=      259.28021 FT/SEC**2
                               (REAR)=       363.05126 FT/SEC**2


    LOADED VEHICLE


    CALCULATED RMS=            1.929 INCHES
    ABSORBED POWER=          6.04455 WATTS
    DAMPER ENERGY (FRONT)=    28173.82812 FT-LB   =      423.13806 FT-LB/SEC
                  (REAR)=     33886.71875 FT-LB   =      508.93908 FT-LB/SEC
    MAXIMUM CLOSING VELOCITY (FRONT)+ =        7.90527 FT/SEC
                                     - =       -7.40234 FT/SEC
    MAXIMUM CLOSING VELOCITY (REAR)+ =         6.84814 FT/SEC
                                     - =       -6.90185 FT/SEC
    MAXIMUM WHEEL ACCELERATION (FRONT)=      278.32617 FT/SEC**2
                               (REAR)=       362.75671 FT/SEC**2
```

ADAPTIVE FLUIDIC DAMPING MOD III

```
RUN ID ---  TERRAIN ID  MOD HII  2.0  VEL=  15.000 MPH
    OVER  2831.99 FEET OF TERRAIN IN  128.727 SECONDS


    EMPTY VEHICLE


    CALCULATED RMS=            1.880 INCHES
    ABSORBED POWER=          5.77899 WATTS
    DAMPER ENERGY (FRONT)=    20312.50000 FT-LB  =       157.79489 FT-LB/SEC
                  (REAR)=     17700.19531 FT-LB  =       137.50155 FT-LB/SEC
    MAXIMUM CLOSING VELOCITY (FRONT)+ =        4.43847 FT/SEC
                                    - =       -5.39062 FT/SEC
    MAXIMUM CLOSING VELOCITY (REAR)+ =         5.57128 FT/SEC
                                    - =       -3.43261 FT/SEC
    MAXIMUM WHEEL ACCELERATION (FRONT)=      169.94097 FT/SEC**2
                               (REAR)=       207.73834 FT/SEC**2


    LOADED VEHICLE


    CALCULATED RMS=            1.879 INCHES
    ABSORBED POWER=          3.24676 WATTS
    DAMPER ENERGY (FRONT)=    20312.50000 FT-LB  =       157.79489 FT-LB/SEC
                  (REAR)=     25390.62500 FT-LB  =       197.24359 FT-LB/SEC
    MAXIMUM CLOSING VELOCITY (FRONT)+ =        4.43359 FT/SEC
                                    - =       -5.43457 FT/SEC
    MAXIMUM CLOSING VELOCITY (REAR)+ =         6.03515 FT/SEC
                                    - =       -5.20996 FT/SEC
    MAXIMUM WHEEL ACCELERATION (FRONT)=      167.38842 FT/SEC**2
                               (REAR)=       261.73461 FT/SEC**2
```

```
RUN ID ---  TERRAIN ID  MOD III 2.0   VEL=  16.000 MPH
    OVER  2831.99 FEET OF TERRAIN IN  120.681 SECONDS


    EMPTY VEHICLE


    CALCULATED RMS=            1.873 INCHES
    ABSORBED POWER=          6.20898 WATTS
    DAMPER ENERGY (FRONT)=    23437.50000 FT-LB  =      194.20904 FT-LB/SEC
                  (REAR)=     19238.28125 FT-LB  =      159.41323 FT-LB/SEC
    MAXIMUM CLOSING VELOCITY (FRONT)+ =        4.48730 FT/SEC
                                    - =       -6.01074 FT/SEC
    MAXIMUM CLOSING VELOCITY (REAR)+ =         5.74951 FT/SEC
                                    - =       -3.66699 FT/SEC
    MAXIMUM WHEEL ACCELERATION (FRONT)=      191.93218 FT/SEC**2
                               (REAR)=       217.55584 FT/SEC**2


    LOADED VEHICLE


    CALCULATED RMS=            1.872 INCHES
    ABSORBED POWER=          3.71105 WATTS
    DAMPER ENERGY (FRONT)=    22631.83593 FT-LB  =      187.53311 FT-LB/SEC
                  (REAR)=     27319.33593 FT-LB  =      226.37490 FT-LB/SEC
    MAXIMUM CLOSING VELOCITY (FRONT)+ =        4.42382 FT/SEC
                                    - =       -5.97900 FT/SEC
    MAXIMUM CLOSING VELOCITY (REAR)+ =         6.52099 FT/SEC
                                    - =       -5.36621 FT/SEC
    MAXIMUM WHEEL ACCELERATION (FRONT)=      193.50299 FT/SEC**2
                               (REAR)=       265.95611 FT/SEC**2
```

```
RUN ID ---  TERRAIN ID  MOD III  2.0  VEL=  26.000 MPH
    OVER  2831.99 FEET OF TERRAIN IN   74.265 SECONDS


    EMPTY VEHICLE


    CALCULATED RMS=            1.912 INCHES
    ABSORBED POWER=          9.54052 WATTS
    DAMPER ENERGY (FRONT)=     26684.57031 FT-LB  =       359.31207 FT-LB/SEC
                  (REAR)=     24145.50781 FT-LB  =       325.12316 FT-LB/SEC
    MAXIMUM CLOSING VELOCITY (FRONT)+ =         6.97753 FT/SEC
                                    - =        -6.64062 FT/SEC
    MAXIMUM CLOSING VELOCITY (REAR)+ =          8.00292 FT/SEC
                                    - =        -4.76562 FT/SEC
    MAXIMUM WHEEL ACCELERATION (FRONT)=       238.66348 FT/SEC**2
                               (REAR)=       326.72650 FT/SEC**2


    LOADED VEHICLE


    CALCULATED RMS=            1.913 INCHES
    ABSORBED POWER=          5.80688 WATTS
    DAMPER ENERGY (FRONT)=     25683.59375 FT-LB  =       345.83374 FT-LB/SEC
                  (REAR)=     28613.28125 FT-LB  =       385.28247 FT-LB/SEC
    MAXIMUM CLOSING VELOCITY (FRONT)+ =         7.09960 FT/SEC
                                    - =        -6.41113 FT/SEC
    MAXIMUM CLOSING VELOCITY (REAR)+ =          7.02636 FT/SEC
                                    - =        -6.12792 FT/SEC
    MAXIMUM WHEEL ACCELERATION (FRONT)=       235.91458 FT/SEC**2
                               (REAR)=       344.79071 FT/SEC**2
```

```
RUN ID ---  TERRAIN ID  MOD III  2.0  VEL=  27.000 MPH
    OVER  2831.99 FEET OF TERRAIN IN   71.515 SECONDS


    EMPTY VEHICLE


    CALCULATED RMS=            1.918 INCHES
    ABSORBED POWER=          9.90936 WATTS
    DAMPER ENERGY (FRONT)=    27319.33593 FT-LB  =       382.00769 FT-LB/SEC
                  (REAR)=     26562.50000 FT-LB  =       371.42486 FT-LB/SEC
    MAXIMUM CLOSING VELOCITY (FRONT)+ =         7.32421 FT/SEC
                                    - =        -6.67480 FT/SEC
    MAXIMUM CLOSING VELOCITY (REAR)+ =          8.17871 FT/SEC
                                    - =        -5.20996 FT/SEC
    MAXIMUM WHEEL ACCELERATION (FRONT)=       234.73648 FT/SEC**2
                               (REAR)=        339.68560 FT/SEC**2


    LOADED VEHICLE


    CALCULATED RMS=            1.910 INCHES
    ABSORBED POWER=          6.13043 WATTS
    DAMPER ENERGY (FRONT)=    27099.60937 FT-LB  =       378.93524 FT-LB/SEC
                  (REAR)=     30200.19531 FT-LB  =       422.29095 FT-LB/SEC
    MAXIMUM CLOSING VELOCITY (FRONT)+ =         8.18847 FT/SEC
                                    - =        -7.65136 FT/SEC
    MAXIMUM CLOSING VELOCITY (REAR)+ =          7.20703 FT/SEC
                                    - =        -6.52832 FT/SEC
    MAXIMUM WHEEL ACCELERATION (FRONT)=       240.62698 FT/SEC**2
                               (REAR)=        314.65093 FT/SEC**2
```

DISTRIBUTION LIST

	No. of Copies
Commander U.S. Army Tank-Automotive Research & Development Command	
ATTN: Chief Scientist, DRDTA-NS	1
Dir, TARAD Lab, DRDTA-R	1
Systems Development Div, DRDTA-RE	1
Foreign Intelligence Office, DRDTA-NF	1
Technical Library, DRDTA-UL	2
Armor & Comp Div, DRDTA-RK	1
Track & Susp Func, DRDTA-RKT	10
Science & Tech Div, DRDTA-RH	1
Test Meth Sub-Func, DRDTA-RHMT	10
Project Manager, Improved TOW Vehicle, DRCPM-FV	1
Systems Project Office-M551 PIP, ZM551	1
Warren, MI 48090	
U.S. Army Tank-Automotive Materiel Readiness Command	
ATTN: Commanding General, DRSTA-CG	1
Project Manager, Mechanized Infantry Combat Vehicle Systems, XM723, DRCPM-MCV	1
Project Manager, M-60 Tank Development, DRCPM-M60TD	1
Project Manager, XM1 Tank System, DRCPM-GCM	1
Federal Republic of Germany Liaison Office, FRG-LNO	1
Product Manager, M113/M113A1, Family of Vehicles, DRCPM-M113	1
Directorate for Weapons Systems Management, DRSTA-W	1
Product Manager, Heavy Equipment Transporter Systems, DRCPM-HT	1
Product Manager, 1-¼ Ton Commercial Truck Systems, XM880, DRCPM-CT	1
U.S. Marine Corps Liaison Office, USMC-LNO	1
Canadian Forces Liaison Office, CDLS-(D)	1
Warren, MI 48090	

	No. of Copies
Commanding Officer U.S. Army Foreign Science & Technical Center Munitions Building, AMSTA-CR-ME Washington, DC 20315	1
Commander U.S. Army Materiel Development & Readiness Command ATTN: DRCRD-DM-G 5001 Eisenhower Avenue Alexandria, VA 22333	2
Commander Defense Documentation Center Cameron Station Alexandria, VA 22314	20
Harry Diamond Laboratories ATTN: Technical Reports Group Washington, DC 21438	1
U.S. Naval Civil Engineer Research & Engineering Laboratory Construction Batallion Center Port Hueneme, CA 93041	1
Commanding General U.S. Army Test and Evaluation Command Aberdeen Proving Ground, MD 21005	2
Commanding Officer Yuma Proving Ground ATTN: STEYP-TE Yuma, Arizona 85364	2
Commander National Defence Headquarters ATTN: Scientific Advisor Ottawa, Ontario Canada KIA OK2	1
Chief Office of Naval Research Washington, DC 20390	1
Superintendent U.S. Military Academy ATTN: Professor of Ordnance West Point, NY 10996	3

	No. of Copies
Superintendent U.S. Naval Academy Annapolis, MD 21402	1
U.S. Army Natick Laboratories Technical Library Natick, MA 01760	1
U.S. Army Deputy Chief of Staff for Operations Washington, DC 20310	2
National Tillage Machinery Laboratory U.S. Department of Agriculture Auburn, AL 36830	1
Commander Naval Ship Systems Command PMS 384-2;DWA Washington, DC 20360	1
Commanding General U.S. Army Engineer Research and Development Center Fort Belvoir, VA 22060	1
President U.S. Army Armor Board Fort Knox, KY 40121	1
President U.S. Army Artillery Board Fort Sill, OK 73503	1
President U.S. Army Infantry Board Fort Benning, GA 31905	1
President U.S. Army Airborne Electronic and Special Warfare Board Fort Bragg, NC 26307	1
President U.S. Army Arctic Test Center APO Seattle, Washington 98733	1

	No. of Copies
President U.S. Army Maintenance Board Fort Knox, KY 40121	1
Commanding General U.S. Marine Corps Landing Forces Development Center Quantico, VA 22134	2
Commanding General Headquarters USARAL ATTN: ARAOD Seattle, Washington 98749	2
Commanding General U.S. Army Supply and Maintenance Command ATTN: AMSSM-MR Washington, DC 20310	1
Commanding General U.S. Army Alaska APO 409 Seattle, Washington 98749	1
Office, Chief of Research & Development Department of the Army Washington, DC 20310	2
U.S. Army Deputy Chief of Staff for Logistics Washington, DC 20310	2
Commanding General U.S. Army Weapons Command ATTN: AMSWE Rock Island, IL 61201	1
Commandant of the Marines U.S. Marine Corps ATTN: AO-4H Washington, DC 20380	1
Commanding Officer U.S. Army Aviation Material Laboratories Fort Eustis, VA 23604	1

	No. of Copies
Commanding Officer U.S. Army General Equipment Test Activity ATTN: Transportation Logistics Test Directorate Fort Lee, VA 23801	1
Commanding Officer ATTN: STEAP-TL Aberdeen Proving Ground, MD 21005	1
Commanding General U.S. Army Aviation School Office of the Librarian ATTN: AASPI-L Fort Rucker, AL 36360	1
Canadian Army Staff 2450 Massachusetts Avenue Washington, DC 20008	4
Commanding General Office of the Chief of Research and Development Department of the Army Washington, DC 20310	1
Director U.S. Army Engineer Waterways Experiment Station Corps of Engineers P.O. Box 631 Vicksburg, MS 39181	3
United States Navy Industrial College of the Armed Forces ATTN: Vice Deputy Commandant Washington, DC 20315	2
Chairman Joint Technical Coordinating Group on Fluidics ATTN: Richard N. Gottron, AMXDO-RCD Harry Diamond Laboratories 2800 Powder Mill Road Adelphi, MD 20783	75

	No. of Copies
HQ Department of the Army Office, Director of Defense Res & Engr ATTN: OSD/ODDR&E, Dr. D. Charvonia Washington, DC 20301	1
HQ Department of the Army Deputy Chief of Staff for Research Development & Acquisition ATTN: DAMA-ARZ-E, Dr. C. Church Washington, DC 20310	1
HQ Department of the Army Deputy Chief of Staff for Research Development & Acquisition ATTN: DAMA-CSS, LTC Hadjis Washington, DC 20310	1
HQ Department of the Army Deputy Chief of Staff for Research Development & Acquisition ATTN: DAMA-CSZ-C, Dr. R. L. Haley Washington, DC 20310	1

UNCLASSIFIED
SECURITY CLASSIFICATION OF THIS PAGE (When Data Entered)

REPORT DOCUMENTATION PAGE

READ INSTRUCTIONS BEFORE COMPLETING FORM

1. REPORT NUMBER: 12226
2. GOVT ACCESSION NO.: AD-A039901
3. RECIPIENT'S CATALOG NUMBER:
4. TITLE (and Subtitle): Fluidic Technology Investigation - Suspension Damping Simulations
5. TYPE OF REPORT & PERIOD COVERED: FINAL January 1977
6. PERFORMING ORG. REPORT NUMBER:
7. AUTHOR(s): James W. Grant, Steven A. Yollick, Mel M. Steele
8. CONTRACT OR GRANT NUMBER(s):
9. PERFORMING ORGANIZATION NAME AND ADDRESS: U.S. Army Tank Automotive Research & Development Command, ATTN: DRDTA-RHMT, Warren, MI 48090
10. PROGRAM ELEMENT, PROJECT, TASK AREA & WORK UNIT NUMBERS:
11. CONTROLLING OFFICE NAME AND ADDRESS: U.S. Army Tank Automotive Research & Development Command, ATTN: DRDTA-RK, Warren, MI 48090
12. REPORT DATE: January 1977
13. NUMBER OF PAGES: 166
14. MONITORING AGENCY NAME & ADDRESS (if different from Controlling Office):
15. SECURITY CLASS. (of this report): Unclassified
15a. DECLASSIFICATION/DOWNGRADING SCHEDULE:
16. DISTRIBUTION STATEMENT (of this Report): Approved for public release, distribution unlimited.
17. DISTRIBUTION STATEMENT (of the abstract entered in Block 20, if different from Report):
18. SUPPLEMENTARY NOTES:
19. KEY WORDS (Continue on reverse side if necessary and identify by block number):

Vibration Damper	Hybrid Computer Simulation
Adaptive Damper	Mathematical Modeling
Adaptive Vibration Damper	Damping Devices
Suspension Systems	Shock Absorbers
Adaptive Suspension Systems	Hydro-Fluidics

20. ABSTRACT (Continue on reverse side if necessary and identify by block number)

The purpose of this investigation is to evaluate adaptive suspension damping devices, specifically those which employ fluidic controls, by means of hybrid computer simulations.

The M151A2, ½ ton, 4 X 4, utility vehicle was first simulated to provide baseline data with which to compare the adaptive dampers.

(Continued)

DD FORM 1 JAN 73 1473 EDITION OF 1 NOV 65 IS OBSOLETE

UNCLASSIFIED
SECURITY CLASSIFICATION OF THIS PAGE (When Data Entered)

This investigation resulted in the definition of parameters which were given to the contractor who is building a "breadboard" of the Adaptive Fluidic Vibration Damper MOD IIB.

Best Available Copy

Best Available Copy