(12)

TECHNICAL REPORT P-54
November 1975
Consolidation of RPMA at Fayetteville, NC

STRUCTURAL FIRE PROTECTION/PREVENTION CONSOLIDATION STUDY FOR FAYETTEVILLE, NC AREA

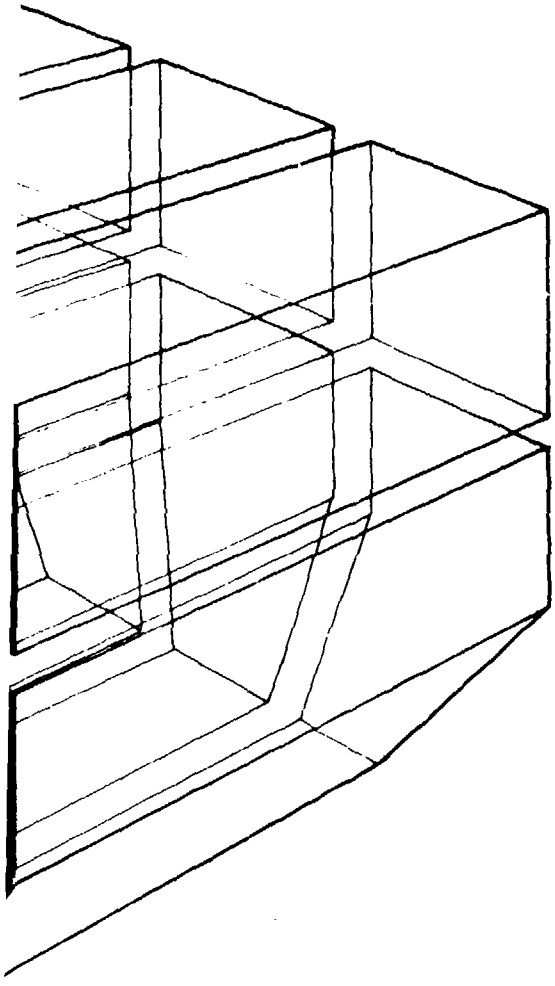

by
David W. Brown

D D C
RECEIVED

CERL

Approved for public release; distribution unlimited.

The contents of this report are not to be used for advertising, publication, or promotional purposes. Citation of trade names does not constitute an official indorsement or approval of the use of such commercial products. The findings of this report are not to be construed as an official Department of the Army position, unless so designated by other authorized documents.

DESTROY THIS REPORT WHEN IT IS NO LONGER NEEDED
DO NOT RETURN IT TO THE ORIGINATOR

UNCLASSIFIED

SECURITY CLASSIFICATION OF THIS PAGE (When Data Entered)

REPORT DOCUMENTATION PAGE

READ INSTRUCTIONS BEFORE COMPLETING FORM

1. REPORT NUMBER: CERL-TR-P-54

2. GOVT ACCESSION NO.

3. RECIPIENT'S CATALOG NUMBER

4. TITLE (and Subtitle): STRUCTURAL FIRE PROTECTION/PREVENTION CONSOLIDATION STUDY FOR FAYETTEVILLE, NC AREA

5. TYPE OF REPORT & PERIOD COVERED: FINAL rept.,

6. PERFORMING ORG. REPORT NUMBER

7. AUTHOR(s): David W. Brown

8. CONTRACT OR GRANT NUMBER(s)

9. PERFORMING ORGANIZATION NAME AND ADDRESS
CONSTRUCTION ENGINEERING RESEARCH LABORATORY
P.O. Box 4005
Champaign, IL 61820

10. PROGRAM ELEMENT, PROJECT, TASK AREA & WORK UNIT NUMBERS
U.S. Army Project Order
ENG-CERL-75-2

11. CONTROLLING OFFICE NAME AND ADDRESS

12. REPORT DATE: Nov [redacted] 75

13. NUMBER OF PAGES: 27 (12) 28p.

14. MONITORING AGENCY NAME & ADDRESS(if different from Controlling Office): CERL [redacted] -75-2

15. SECURITY CLASS. (of this report): Unclassified

15a. DECLASSIFICATION/DOWNGRADING SCHEDULE

16. DISTRIBUTION STATEMENT (of this Report)

Approved for public release; distribution unlimited.

DDC DEC 8 1975 C

17. DISTRIBUTION STATEMENT (of the abstract entered in Block 20, if different from Report)

18. SUPPLEMENTARY NOTES

Copies are obtainable from National Technical Information Service
Springfield, VA 22151

19. KEY WORDS (Continue on reverse side if necessary and identify by block number)

firefighting requirements
fire prevention manpower
fire protection consolidation

20. ABSTRACT (Continue on reverse side if necessary and identify by block number)

This study analyzed the structural firefighting requirements at Fort Bragg and Pope Air Force Base, located at Fayetteville, NC.

The study requirements were (1) to evaluate present resources and requirements for structural fire protection and prevention, and (2) to determine if consolidation would result in substantial manpower or equipment reductions. Fire prevention/protection consolidation was to

DD FORM 1 JAN 73 1473 EDITION OF 1 NOV 65 IS OBSOLETE

UNCLASSIFIED 405 279

SECURITY CLASSIFICATION OF THIS PAGE (When Data Entered)

Block 20 continued.

be evaluated both as an integral part of a joint facilities engineering consolidation organization and as a stand-alone consolidation organization.

The results of the study indicate that because of the widespread locations of the Air Force and Army airfields and mission-essential facilities, both installations are manned at the minimum acceptable level of structural firefighting companies. The number of fire companies cannot be reduced and still meet the minimum DOD response requirements.

Relocation of the temporary Fire Station Number 3 at Fort Bragg will provide coverage for areas at Fort Bragg which do not now meet the DOD response requirements and will reduce the current overlapping of the Bragg-Pope response coverages. An expansion of the Bragg-Pope mutual aid agreement to have Pope AFB assume responsibility for some of the structural protection in the northwest section of Fort Bragg is recommended. This will allow the most advantageous relocation of Fort Bragg Station Number 3.

Consolidation of the individual fire protection/prevention activities will not significantly reduce required equipment, manpower, or facilities. At most, anticipated annual savings of $88,801, or 4.6 percent, would result from the reduction of five supervisory positions after consolidation. However, these savings do not appear to warrant consolidation at this time, since command and reporting requirements will remain distinct until the entire RPMA organization at Ft Bragg and Pope AFB might be consolidated. This is pending the final result of the ongoing RPMA Consolidation Study.

FOREWORD

The research was conducted for the Directorate of Facilities Engineering, Office of the Chief of Engineers, under U.S. Army Project Order ENG-CERL-75-2, dated 25 June 1975, for Phase II of RPMA Consolidation at Fayetteville, NC. The work was performed by the Data Systems Branch, Facilities Operations and Maintenance Division (FM), Construction Engineering Research Laboratory (CERL), Champaign, IL.

Mr. Jeffrey G. Kirby, Data Systems Branch, CERL, was the Principal Investigator for this study. The OCE Technical Monitor was LTC John Burt, DAEN-FEP. The study was conducted under the general supervision of Mr. Richard J. Colver, Chief, Data Systems Branch, and Mr. E. A. Lotz, Acting Chief, FM.

Appreciation is expressed to Chief H. Engle at Fort Bragg and Chief J. Robinson at Pope Air Force Base for their support in the collection of the required data.

COL Melvyn D. Remus is Commander and Director of CERL and Dr. L. R. Shaffer is Deputy Director.

CONTENTS

DD FORM 1473 1
FOREWORD 3

1 INTRODUCTION 5
Background
Purpose
Approach

2 FORT BRAGG ANALYSIS 7
Existing Operations
Work Requirements
Fire Company Responses
Available Firefighting Resources

3 POPE AFB ANALYSIS 11
Existing Operations
Work Requirements
Fire Company Responses
Available Firefighting Resources

4 FIRE FLOW ANALYSIS 14
Fire Flow Required
Pumpers Required

5 INTERSERVICE SUPPORT AGREEMENT ANALYSIS 17
Mutual Aid Agreement
Reciprocal Agreement

6 CONSOLIDATION EVALUATION 18
Fire Station Requirements
Resource Requirements
Reporting Requirements of Consolidated Fire Departments

7 CONCLUSIONS AND RECOMMENDATIONS 21

APPENDIX A: DOD Fire Response Requirements 23
APPENDIX B: Existing Response Coverages for the Fort Bragg Fire Department 24
APPENDIX C: Overlap of Response Coverages for Fort Bragg and Pope AFB 26
APPENDIX D: Existing Response Coverages for Pope AFB Fire Department 27

DISTRIBUTION

STRUCTURAL FIRE PROTECTION/
PREVENTION CONSOLIDATION STUDY
FOR FAYETTEVILLE, NC AREA

1 INTRODUCTION

Background. In a memorandum dated 13 May 1975, the Deputy Assistant Secretary of Defense (Installations and Housing) expanded the requirements of the lead service conducting the Consolidation of Real Property Maintenance Activities (RPMA) Survey to include the functional area of structural fire protection.[1] The established guidelines for Consolidation of RPMA Surveys at Military Installations were directed to be used.

The Acting Deputy Director, Directorate of Facilities Engineering, Office of the Chief of Engineers, requested the Construction Engineering Research Laboratory (CERL) to include the Fire Consolidation Study for the Fayetteville, NC area in the on-going RPMA Consolidation study for that area.[2]

CERL conducted a survey of the Fayetteville area (Fort Bragg and Pope AFB) from August through October 1975 to collect the required data for the economic evaluation of fire services. (See Figure 1 for a map of the area.)

Purpose. The purpose of this report is to present an analysis of structural firefighting services in the Fayetteville, NC area--including available and required resource requirements and responsiveness of existing Interservice Support Agreements--in order to evaluate the possibilities and economies of consolidating such services.

Approach. A detailed survey was made of the structural fire protection in the Fayetteville area. The data collected included:

a. An inventory of the existing mobile firefighting apparatus and associated personnel.

b. Fire prevention inspection requirements for each installation.

---

[1] Memorandum, Deputy Assistant Secretary of Defense (I&H), 13 May 1975, Subject: Consolidation of Real Property Maintenance Activities (RPMA) at Military Installations.

[2] Letter, Acting Deputy Director, Facilities Engineering, OCE, 17 June 1975, Subject: Consolidation of Real Property Maintenance Activities (RPMA) at Military Installations.

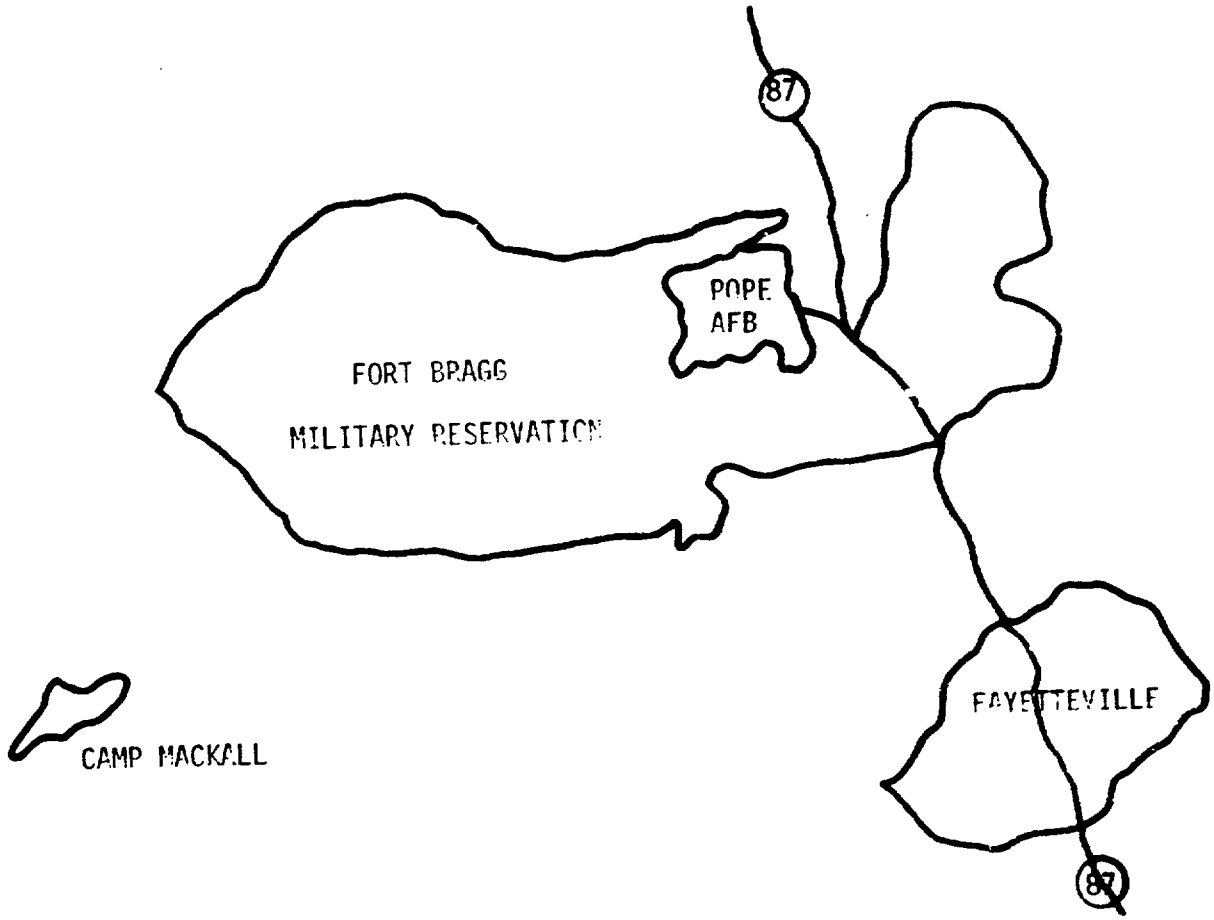

Figure 1. Map of Fayetteville, North Carolina area.

c. The maximum fire flow* requirement and fire flow available for the principal risk facility on each installation. (These figures were used to determine the required number of fire companies for each area in accordance with the DOD guidelines presented in Appendix A.)

The study also included the following:

a. An evaluation of the number of fire companies and locations (stations) according to the DOD response (distance and time) requirement.

b. An evaluation of the possibility of firefighting assistance from outside the installations and the effectiveness of such assistance.

c. An investigation of the feasible alternatives for consolidation, based on an evaluation of requirements for mobile apparatus/personnel and fire protection coverage.

d. Determination of the manpower and cost savings resulting from expanded cooperation or consolidation.

2 FORT BRAGG ANALYSIS

Existing Operations. Fort Bragg operates five fire companies at three station locations. The installation's fire risk is considered high because of its high-rise hospital, large commissary, mission-essential facilities, and high volume of air traffic.

Fire Station Number 1. Fire Station Number 1 is the main structural fire station and has two fire companies which operate two 750 pumpers and a standby 750 pumper used for maintenance rotation. Both active pumpers are manned with four firefighters. The station also houses the Central Communications Center which is operated by the firefighters on a 2-hour rotational shift basis. The center monitors the alarms, plus anti-intrusion and sprinkler systems. Four personnel spaces are allotted to this function. Station Number 1 also has an extinguisher repair shop which performs repairing and recharging services for the installation. The firefighters service approximately 3,500 extinguishers each month, and one personnel space is authorized for this function. The fire prevention inspectors are located at this station.

SAAF Fire Station. Simmons Army Airfield (SAAF) Fire Station has two

* The fire flow is the quantity of water required through the distribution system for domestic use and for firefighting which includes hose stream and sprinkler requirements.

cross-manned fire companies operating two P-4 vehicles and a standby 530 crash vehicle. One P-4 vehicle is manned with four firefighters and the second is manned with three firefighters. The SAAF Fire Station is required to provide both structural and crash protection; the P-4 vehicles can function for either requirement. SAAF has 38 buildings, a 5,000 foot (1524 m) runway, and over 370 aircraft stationed, with an average of 700 takeoffs and landings every 24 hours.

Fire Station Number 3. This temporary Fire Station has one cross-manned fire company to operate one 750 pumper, manned with four firefighters, and one 530 crash vehicle. This company provides structural protection to the east side of the post and standby support to Womack Army Hospital's Medi-vac and Gabriel Field's aerial demonstrations. In addition to the 11 firefighters required for one fire company, three firefighters have been recognized to augment the crash requirement. Master planning requirements call for this station to be relocated.

Camp MacKall. Field troops stationed at Camp MacKall, located near the Fort Bragg reservation, provide local fire protection. Their training is provided by the Fort Bragg Fire Chief.

Ranger Stations. Three isolated ranger stations on the Fort Bragg reservation are protected by mutual aid agreements to provide the first response. Ranger Station Number 1 is covered by the Raeford Fire Department, distance 18.2 miles (29.3 km); Ranger Station Number 2 is covered by the Southern Pine Fire Department, distance 21 miles (33.8 km); and Ranger Station Number 3 is covered by the Voss Fire Department, distance 11.6 miles (18.7 km).

Work Requirements

Firefighters. The firefighters work a rotating, 24-hour shift, 7 days a week, performing 10 hours of productive work per day with 14 hours on standby. The firefighters work 72 hours per week and are required to receive four hours of proficiency training each week. They are responsible for daily maintenance of fire equipment, semi-annual tests of fire hoses, semi-annual maintenance and water flow tests of 1,440 fire hydrants, monthly service and/or repair of over 3,500 fire extinguishers, and updating of pre-plans for over 5,000 facilities. The firefighters augment the fire inspectors for the annual family housing inspection and for periodic checks of theaters, clubs, and other gathering places. They also augment the alarm maintenance personnel who test and inspect alarm and sprinkler systems.

Inspection. Fire inspectors' duties include administering the fire prevention program and instructing installation personnel in the use of first aid and fire extinguishers. Inspection responsibility covers 20,253,905 sq ft (1,881,649 m^2) of building space, which includes 4,212 family housing units (not counting the 150 units under construction), approximately 4,000,000 sq ft (372,000 m^2) of open storage, and 184

range buildings. Since the 1974 manpower survey team interpreted the DA and FORSCOM policy as not recognizing fire protection inspectors for inspection of installations which have fire companies, only one such position has been allotted--for the inspection of Camp MacKall and 30 U.S. Army Reserve Centers, which depend entirely on civilian fire protection. However, since the fire chief assigns firefighters to perform alarm room and extinguisher repair duties, three additional spaces have been made available for fire inspectors in an attempt to meet the installations' inspection requirements. Specific inspection duties are listed below:

a. Approximately two-thirds of one fire inspector's time is required by the Inspector General teams (1,356 hours).

b. Fort Bragg's fire department inspects 30 U.S. Army Reserve Units and Camp MacKall annually, requiring approximately 170 hours of inspection and travel time.

c. All family housing units are inspected annually and newcomers are briefed. The firefighters assist with the family housing inspections.

d. The administrative buildings, warehouses, service buildings, troop housing, hospital complex, outside storage, and recreation buildings require quarterly inspection.

e Food service facilities such as clubs, post exchanges, and bowling alleys require weekly inspection.

These inspection requirements total over 14,000 hours for just the quarterly and weekly inspections. Since the fire department has only four inspectors, all the requirements cannot be satisfied. See Table 1.

Alarm Maintenance. The alarm maintenance section, which repairs and maintains the fire alarm and anti-intrusion systems, has two personnel assigned to the Fire Chief from the DFAE Interior Electrical Systems Maintenance Section. This section is also supported by firefighter labor.

Extinguisher Repair. As mentioned earlier, 3,500 extinguishers are repaired and/or charged monthly. One fire extinguisher repairman is authorized for this duty; however, the firefighters rotate the duty.

This service is performed without charge, except for the cost of the CO_2. Fort Bragg stores 10,000 gal (38 m^3) of CO_2 to meet the requirements of both Bragg and Pope AFB.

Fire Company Responses. Fire Stations Number 1 and Number 3 respond to the main cantonment area; the SAAF Fire Station is responsible for the airfield, including all of the buildings. A small area in the southern section of Fort Bragg, consisting of warehousing, operational buildings,

Table 1

Fire Prevention and Protection Division, Fort Bragg, North Carolina

Fire Inspection Work Schedule FY 76

Description	Frequency of Insp.	Allowed Time Each Inspection	Total Time Required	Units or Bldgs.	Totals hours	Remarks
Family Housing	Annually	½ hrs	½ hrs	4,459	2,229½	
Family Housing	Newcomers	½ hrs	½ hrs	2,821	1,410½	3,640
US Army Reserve Units & Camp MacKall	Annually	5 ½ hrs	5½ hrs	31	168	168
Administration Bldg	Quarterly	1½ hrs	6 hrs	190	1,140	
Warehouses, Services Buildings	Quarterly	2 hrs	8 hrs	127	1,016	
Troop Housing	Quarterly	1 hr	4 hrs	2,301	9,204	
Hospital Temp-Clinic	Quarterly	1 hr	4 hrs	173	692	
Hospital Perm	Quarterly	6 hrs	24 hrs	1	24	
Outside Storage	Quarterly	2 hrs	8 hrs	5	40	
Recreation Bldgs	Quarterly	1 hr	4 hrs	8	32	12,184*
Clubs, PX, Bowling Alleys where food is served	Weekly	1 hr	52 hrs	36	1,872*	1,872*

* This includes 1,356 hours required by Inspector General team.

etc., is not within the required 2 miles (3.2 km) and 4 1/2 minutes from any fire station. Appendix A gives the DOD requirements for a fire company's response. Master planning requirements established by the Fort Bragg Planning Board call for relocating the temporary Fire Station Number 3 to a permanent location which will reduce the above deficiency. See Appendix B for a map of Fort Bragg and the response coverages attained from existing fire station locations. The overlap of coverage between Fort Bragg and Pope AFB is shown in Appendix C.

Available Firefighting Resources. Table 2 summarizes available firefighting resources in terms of personnel and equipment.

3 POPE AFB ANALYSIS

Existing Operations. Pope AFB operates five fire companies at two station locations. However, the two stations are within half a mile (.8 km) of each other and therefore can be considered as one location. Pope AFB has a high fire risk due to industrial areas, aircraft maintenance hangars, POL proximity to the pump house, and large volume of air traffic, including C5 aircraft.

Fire Station Number 1. Station Number 1, the airfield's crash rescue station, has four fire companies which operate the five major aircraft-firefighting vehicles and are cross-trained for the one structural pumper. Station 1 also houses the alarm room, the fire extinguisher maintenance activity, and the inspection team.

Fire Station Number 2. Station Number 2 houses two structural pumpers, one of which is used for rotational maintenance. Neither pumper is authorized a personnel slot; however, one fire company consisting of four cross-trained firefighters and one extra man to monitor the phone has been stationed at this location. The men are cross-manned for the structural pumper and crash vehicles. These spaces were obtained from the crash requirement authorized for the airfield.

Work Requirements

Firefighters. The operational personnel (firefighters) work a rotating 24-hour shift, 7 days a week. They are responsible for maintaining proficiency in firefighting techniques and performing daily equipment maintenance. The firefighters perform fire flow tests on 175 fire hydrants and keep the hydrants painted. They also supplement the Technical Services Section for the annual family housing inspection, and inspect assembly areas during peak times. Duties also include crash requirements such as ramp patrols and standby.

Table 2

Available Firefighting Resources, Fort Bragg

Personnel

Quantity	Description	Grade Level
1	Fire Chief	GS/11
3	Assistant Fire Chief	GS/9
1	Chief, Fire Prevention Inspector	GS/8
5	Station Captain	GS/7
7	Crew Chief	GS/6
3	Fire Prevention Inspector	GS/6
12	Firefighter (Driver-Operator)	GS/5
24	Firefighter	GS/4
5	Firefighter (Trainee)	GS/3
61	Total	
2	Communication Installer--detailed from Interior Electrical Shop, DFAE	WG/11

Equipment

4	750 - Pumper (one for rotational maintenance)
2	530 - Crash Vehicle (one for rotational maintenance at SAAF and one for hospital medi-vac)
2	P-4 Crash Vehicle
1	Sedan
4	Pickup Truck
1	Panel Truck
1	Light Utility Truck

Inspection. Air Force Manual 26-3 provides for four fire inspectors for Pope AFB.[3] The Pope AFB Fire Department has the four inspectors plus a Chief of Technical Services who is not one of the recognized Assistant Fire Chiefs, but has been recognized as a special local requirement. Inspection responsibility of these five personnel includes 340 buildings with 2,547,000 sq ft (236,600 m^2) of building space and open storage.* The 461 family housing units are inspected annually with aid from the firefighters. An orientation briefing is given to newcomers within 30 days after their arrival.

Other routine duties include: (1) weekly inspections of recreational facilities such as the 10 service clubs and bowling alleys, (2) monthly inspections of 108 facilities including maintenance hangers and technical facilities, (3) quarterly inspections of 53 facilities such as administrative buildings and barracks.

Fire prevention inspections are adequately covered by the Technical Services Section and all requirements are currently being met. The fire inspectors spend approximately 5 hours in the field each day, 2 to 2 1/2 hours studying technical publications, and the remainder performing office work. Each fire inspector is spending between 10 and 12 hours a week studying, which appears to be at least twice the time usually available to this type of personnel. The study time allowed for the four inspectors is greater than 2,000 hours per year.

Alarm Maintenance. Technical Services performs minor maintenance on alarm systems, and the Base Civil Engineer does the major maintenance or contracts the work. Alarm maintenance is performed under contract on 20 facilities.

Alarm Room and Extinguisher Maintenance. Manpower evaluations do not recognize spaces for the alarm room or for extinguisher maintenance. The fire chief rotates four military firefighters to serve as dispatchers for the central alarm center. Extinguisher maintenance is also performed by a military firefighter. CO_2 is obtained from Fort Bragg for the fire extinguishers.

Prime Beef. Pope AFB has a special requirement for a 12-man Prime Beef Team. This team can be called up at any time, but is backed up by a reserve team. The total Prime Beef manpower requirement is 20.

---

[3] Air Force Manpower Standards, Direct Support, AFM 26-3, Vol IV, 2 February 1973.

* The square footage for buildings and open storage given here was the figure used to determine the number of inspectors and supervisors by Pope AFB on the last manpower survey. However, this study only revealed 1,773,578 sq ft (164,770 m^2) as determined by Real Estate Management Section, BCE. This would reduce the requirement for inspectors to three.

Fire Company Responses. The Pope AFB fire companies are within the specified response requirements (Appendix A). Appendix D shows a map of the response coverage attained for the existing fire stations at Pope AFB. The overlap of coverage between Pope AFB and Fort Bragg, shown in Appendix C, will be reduced when Fort Bragg Station Number 3 is relocated.

Available Firefighting Resources. Table 3 summarizes available firefighting resources in terms of personnel and equipment. The Prime Beef Team has an additional supervisory requirement of two spaces.

4 FIRE FLOW ANALYSIS

Fire Flow Required. The maximum fire flow requirements were determined for both Fort Bragg and Pope AFB, based on the facility with the principal fire risk at each installation. The fire risks are considered high at both areas.

Fort Bragg Requirements. Fort Bragg's principal risk, the commissary (52,942 sq ft[4918.5 m^2]), is within the 2 mile (3.2 km), 4 1/2 minute response requirement from Station Number 1. The building is noncombustible and has a sprinkler system. The maximum fire flow requirement as specified in TM 5-813-6[4] is 1,500 gpm (.0946 m^3/sec) plus the sprinkler requirement of 1,000 gpm (.06309 m^3/sec); a total facility requirement of 2,500 gpm (.1577 m^3/sec). The available fire flow is 2,440 gpm (.1539 m^3/sec), as determined from the water flow test performed by the Fort Bragg Fire Department.

Pope AFB Requirements. Pope AFB's principal risk, the general technical building (32,832 sq ft [3050 m^2]), is within the 2 mile (3.2 km), 4 1/2 minute response requirement. The building is noncombustible and has a sprinkler system.

The maximum fire flow requirement as specified in AFM 88-10[5] is 1,500 gpm (.0946 m^3/sec) plus the sprinkler requirement of 600 gpm (.038 m^3/sec); a total facility requirement of 2,100 gpm (.1325 m^3/sec). The fire flow available is 1,769 gpm (.1116 m^3/sec) as determined from the water flow test performed by the Pope AFB Fire Department.

Pumpers Required. The required number of pumpers is predicted based on 75 percent of the largest single fire flow requirement using a 750 gpm

---

[4] *Water Supply for Fire Protection,* TM 5-813-6 (Department of the Army, October 1965).

[5] *Water Supply for Fire Protection,* AFM 88-10, Chap 6 (Department of the Air Force, 2 July 1958).

Table 3

Available Firefighting Resources, Pope AFB

Civilian Personnel

Quantity	Description	Grade Level
1	Fire Chief	GS/11
3	Assistant Fire Chief	GS/9
1	Assistant Fire Chief	GS/7
1	Chief, Technical Services	GS/8
4	Crew Chief	GS/6
1	Fire Prevention Inspector	GS/6
3	Fire Prevention Inspector	GS/5
10	Driver	GS/5
5	Firefighter	GS/5
11	Firefighter	GS/4
4	Firefighter	GS/3
1	Administrative Clerk-Typist	GS/2
45	Total	

Military Personnel

1	Deputy Fire Chief	MSgt
1	Assistant Chief, Training	TSgt
2	Station Captain	TSgt
3	Assistant Station Captain	TSgt
7	Crew Chief	SSgt
1	Extinguisher Repairman (firefighter)	Sgt
1	Rescue man	Sgt
4	Dispatcher (firefighter	Sgt
6	Driver	Sgt
1	Firefighter	Sgt
7	Firefighter	A/1C
16	Firefighter	Amn
50	Total	

Total Civilian and Military manpower is 95.

Table 3 (cont'd)

Equipment

1	P-4	Crash Vehicle
2	P-2	Crash Vehicle
2	F-7	R/W Foamer
2	W/D	Water Disburser
1	P-6	Ramp patrol vehicle
1	P-13	Ramp patrol vehicle
1	P-10	Rescue vehicle
1	P-8	Pumper
1	P-12	Pumper (750)
1	530-B	Pumper
2	750-A	Pumper (in storage)
1	C/A	Carry-all, Fire Chief Vehicle
2	P/U	Pickup, Ass't. Chief Vehicle and Extinguisher Maintenance Vehicle

(.047 m^3/sec) capacity pumper as the standard. The actual water flow available for each facility discussed above is greater than two-thirds of the estimated requirement.

Table 4 provides the number of pumpers required based on the fire flow analysis, and the number of pumpers actually available at each installation.

Table 4

Number of Pumpers Required Based on Fire Flow Analysis

	Pope AFB	Fort Bragg
Fire flow required/available (gpm) (within .66 requirement)	2,100 (.1325 m^3/sec)	2,500 (.1577 m^3/sec)
Required capacity (gpm) (75% of fire flow)	1,575 (.09937 m^3/sec)	1,875 (.1183 m^3/sec)
Number of pumps required (750 gpm capacity [.047 m^3/sec])	2	3
Number of pumpers now manned	2 (cross-manned)	3

5 INTERSERVICE SUPPORT AGREEMENT ANALYSIS

The Interservice Support Agreements (ISSAs) in the Fayetteville area were analyzed to determine if response time requirements could be met by fire departments outside the installations.

Mutual Aid Agreement. Pope AFB and Fort Bragg have a mutual aid agreement to provide firefighting assistance. Pope AFB has agreed to respond to and assist the Fort Bragg Fire Department with fires in the eight Army facilities located on Pope AFB. The fire departments provide each other with direct response when all fire companies of the responsible fire department have responded to previous alarms, or when backup support is requested for major fires. The departments also assist each other for aircraft crashes.

The overlap in response coverage between Fort Bragg and Pope AFB will no longer exist when the Fort Bragg Fire Station Number 3 is relocated. Cooperation in establishing the proper response coverage when the station is relocated can be achieved either by consolidating the fire departments under one chief or by expanding the ISSA.

Reciprocal Agreement. Fort Bragg has emergency reciprocal agreements with the Fayetteville Fire Department, Spring Lake Fire Department, and all the volunteer fire departments within Cumberland County. All the agreements call for the maximum assistance that can be spared without endangering fire protection at the fire department called, and will be furnished without charge or claims.

The Fayetteville Fire Department provides Fort Bragg with a ladder truck on request but requires approximately 30 minutes to respond from a distance of 14 miles (22.5 km). The other fire departments require in excess of 30 minutes to respond to a call from Fort Bragg from distances ranging from 3 (4.8 km) to over 30 miles (48.3 km). The volunteer fire departments surrounding the two installations can provide backup support but cannot provide the required response coverage.

6 CONSOLIDATION EVALUATION

Fire Station Requirements. The two fire stations at Pope AFB in effect operate as one station. The base's master plan provides for enlargement of the main station so that Station Number Two can be eliminated. Since Pope AFB Fire Department is cross-manned for crash and structural fire-fighting and the only manpower spaces are authorized for crash vehicles, there appears to be no justification to remove or reduce the structural capability. Pope AFB currently can meet all its fire protection requirements.

Fort Bragg requires the three stations that now exist to meet the time and distance response requirements. Simmons Army Airfield (SAAF) is located on the far east edge of the geographical area under consideration, which eliminates a consolidation between the SAAF Fire Station and the other two Fort Bragg fire stations. The SAAF fire station is now cross-manned to handle both the structural and crash requirements at the airfield.

Because of the widely scattered operational, industrial, and warehouse facilities, the main cantonment area at Fort Bragg needs two stations to meet required time and distance responses. At present, the southeast edge of the cantoment area is not within the required 2 mile (3.2 km), 4 1/2 minute response requirement (see Appendix C).

Due to the location and requirements of the Air Force and Army airfields, the long reaction times for outside fire departments, and the DOD response and distance requirements, the combined area of Fort Bragg and Pope AFB requires the existing four fire stations. However, Fort Bragg's relocation plans for Fire Station Number 3 will facilitate meeting all the response requirements. A consolidation of the fire departments at the two installations would aid in relocating the fire station at the most advantageous site. The present overlap in response coverage between the Pope AFB fire station and Fort Bragg Station Number 3 could be

eliminated or at least reduced by having the Pope AFB fire station assume responsibility for this overlap area.

Resource Requirements. The manpower and cost savings that would result from consolidating the fire departments would come from a reduction in the supervisory levels. The Fort Bragg supervisory level now consists of five personnel; the Pope AFB level consists of eight personnel. The consolidated fire department would require four fire stations and eight supervisory personnel as shown in Table 5. This elimination of five supervisors (one Fire Chief, three Assistant Fire Chiefs, and one Chief Fire Prevention Inspector [Technical Services]) would effect savings of approximately $88,801, including upgrading the Fire Chief from GS 11 to GS 12 and the Assistant Fire Chiefs from GS 9 to GS 10. A Deputy Fire Chief with Prime Beef responsibilities, as now exists at Pope AFB, would be included.

As a result of consolidation, the two communication centers would be centralized at one location to serve both installations, which would reduce the personnel requirement from eight to four. However, since the Pope AFB Fire Department does not have spaces recognized for dispatchers and must use firefighters, and since Fort Bragg is recognized for four alarm room operators, this consolidation, although desirable, would not produce monetary savings. Some labor time would become available for other tasks, however. The consolidation of the communication centers will require a study to determine the operations plan and the one-time conversion costs.

The fire extinguisher maintenance could be centralized at one location, which would reduce the requirement from two repairmen to one. Again, the cost savings would not be apparent, since the Pope AFB Fire Department has not been recognized for a repairman. It is possible, however, that some labor time would become available for other tasks.

Although consolidation is not expected to reduce the requirement for fire inspectors except at the supervisory level, a more efficient inspection program could be developed. The Fort Bragg Fire Department staffing crieria do not allow fire inspectors for on-post duties. As a consequence all of the on-post inspection cannot be performed by firefighters. Pope AFB Fire Department, however, has been allowed five inspectors, based upon square footage of installation facilities. Pope AFB just barely exceeds the square footage requirement for four inspectors. (See footnote on page 13.) This allows each inspector a generous study period of 2 to 2 1/2 hours per day. Under consolidated activities, a reduction of one half of the study time allowed for Pope inspectors would produce a half-time inspector who could be used to fill the inspection deficiency at Fort Bragg. Fort Bragg has been allowed one inspector to inspect facilities outside the installation, such as USAR Centers and Camp MacKall. The consolidation of fire inspection for the two fire departments can result in the reduction of one inspection supervisor.

Table 5

Consolidated Fire Department--Supervisors

Quantity	Description	Grade Level
1	Fire Chief	GS/12
1	Deputy Fire Chief	M Sgt
3	Assistant Fire Chiefs	GS/10
1	Chief, Fire Prevention Inspector	GS/8
1	Assistant Chief for local Air Force crash requirement	GS/7
1	Air Force Prime Beef Supervisor	T Sgt
8	Total	

Reporting Requirements of Consolidated Fire Departments. For an RPMA consolidation, the Fire Chief of the consolidated fire department could report to the head of the joint facilities engineering consolidation organization. For a stand-alone consolidation, the Fire Chief could be independent of any other consolidation effort and report to a representative of both installation commanders.

In either case, the structure of the consolidated fire department would be unaffected. Thus, the evaluation of the feasibility of consolidated fire prevention/protection is independent of the consideration of RPMA consolidation.

Consolidation would offer no savings in terms of a reduction of operational personnel. The number of fire companies and required operational personnel spaces are justified by the DOD requirements for structural fire protection.

7 CONCLUSIONS AND RECOMMENDATIONS

Consolidating the fire departments at Fort Bragg and Pope AFB will not result in a reduction in the existing fire companies. Consolidation could, however, save approximately $88,801 per year, a 4.6 percent savings, through reduction in supervisory personnel requirements. In addition, some efficiencies in operation and use of resources could be achieved by centralizing the communication centers, fire extinguisher repair shops, and inspection sections; and by relocating Fort Bragg Fire Station Number 3. Efficiencies resulting from centralization of repair shops and inspection sections can also be realized through expansion of existing ISSAs. The relocation of Fort Bragg Fire Station Number 3 will take place in any case, but expansion of Pope AFB coverage to include the northern portion of Fort Bragg can also be handled by ISSA. If either consolidation or ISSA expansion is pursued, an operations plan must be developed along with a detailed analysis of one-time costs.

The apparent savings from reduction of supervisory requirements do not seem to justify a separate stand-alone consolidation at this time, since command responsibilities and reporting requirements will remain distinct until such time as the entire RPMA organization is consolidated. If and when this happens, the fire protection/prevention services could be considered within the RPMA consolidation plan. Until such time, it is recommended that the existing ISSAs be expanded to improve response coverage and use of existing personnel.

APPENDIX A:

DOD FIRE RESPONSE REQUIREMENTS[6]

Fire Companies Response Distances/Times. Where property at risk involves operational, industrial, technical school, warehousing, and hospital facilities, fire companies shall be located within 2 miles (3.2 km) and time for fire company response shall not exceed 4.5 minutes.

Where property at risk involves administrative, training, community, commercial, dormitory, BOQ/VOQ, multi-family housing, and like facilities, fire companies shall be located within 3 miles (4.8 km) and time required for fire company response shall not exceed 6 minutes.

Where property at risk involves individual or duplex family housing (compact build-up area), trailer courts, and like facilities, fire companies shall be located within 5 miles (8 km) and time required for fire company response shall not exceed 8.5 minutes.

Where property at risk involves isolated single family housing and/or incidential structures, fire companies shall be located within 7 miles (11.3 km) and time required for fire company response shall not exceed 10 minutes.

[6] Memorandum, Deputy Assistant Secretary of Defense (I&H), 13 May 1975, Subject: Consolidation of Real Property Maintenance Activities (RPMA) at Military Installations.

APPENDIX B:
EXISTING RESPONSE COVERAGE FOR THE FORT BRAGG FIRE DEPARTMENT

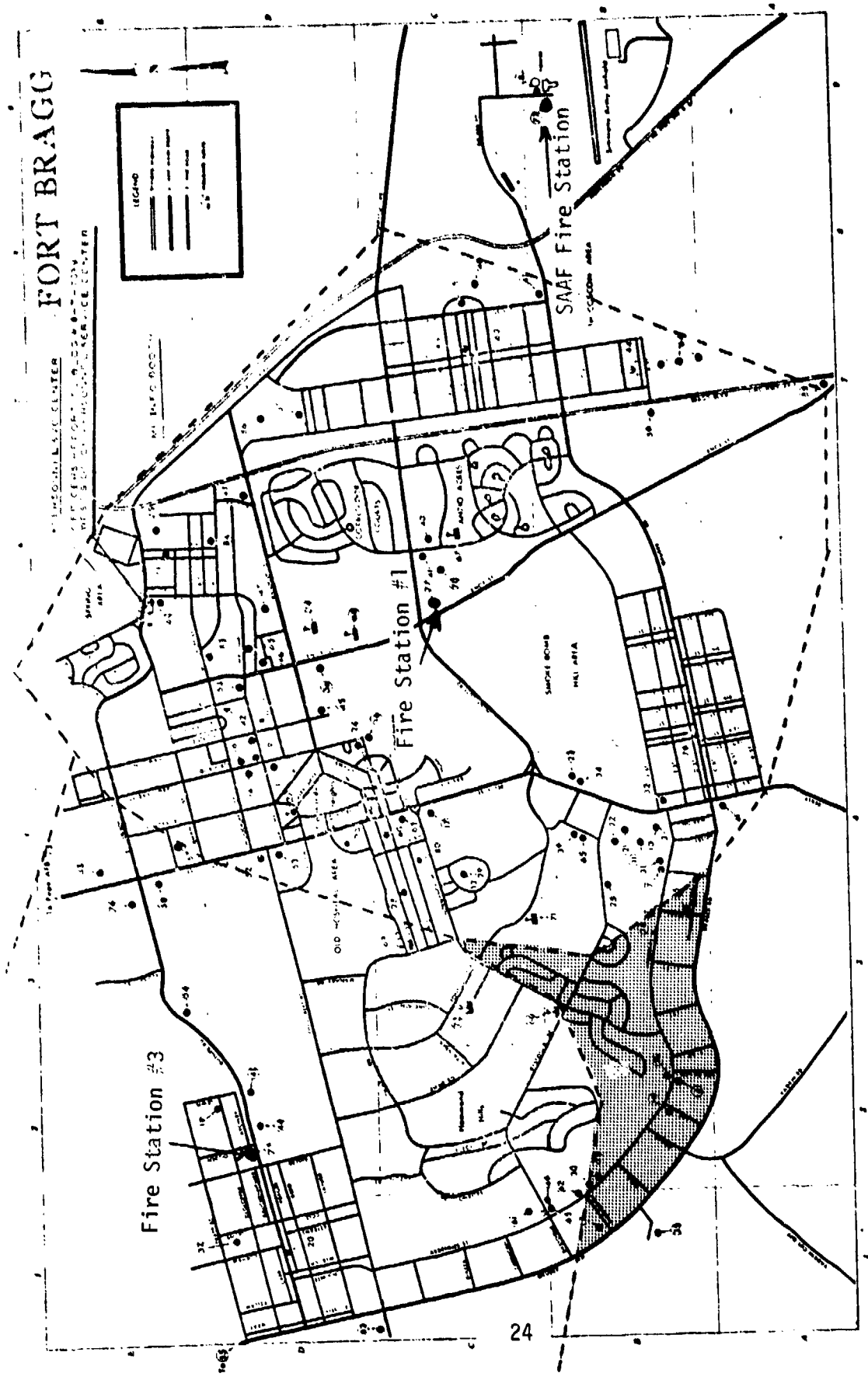

Dotted line is the boundary of the 2 mile (3.2 km), 4.5 min response requirement for each station.
Shaded area contains some facilities requiring this response but not obtaining it from any station.

FORT BRAGG
NORTH CAROLINA

MAJOR UNIT HEADQUARTERS

1.	XVIII Abn Corps & Ft Bragg	4D
2.	82d Abn Div	1B
3.	JFK Cen for Mil Asst	4B
4.	XVIII Abn Corps Arty	2B
5.	1st COSCOM	8C
6.	16th MP Group	4D
7.	35th Signal Group	4B
8.	12th Combat Avn Group	9B
9.	HQ Command	5D
10.	USAIMA	4B
11.	First ROTC Region	4B
12.	MEDDAC (Womack Army Hosp)	4C
13.	FORSIC	5E
14.	USAACEBD	4D
15.	USA Readiness Group	3B
16.	504th ASA Bde	2B
17.	USA Parachute Team	4C
18.	USACC Agency	5D
19.	USA NCO Academy	2D
20.	USACID (Field Ofc)	1D

BILLETING, TRANSIENT

21.	Office (Moon Hall)	4B
22.	Hardy Hall	4B
23.	Leal House	4B
24.	Normandy House	5D
25.	Delmont House	4B

CHAPLAIN ACTIVITIES

26.	JFK Memorial Chapel	3B
27.	Main Post Chapel	4D
28.	Religious Educ Center	4C

MEDICAL ACTIVITIES

29.	Womack Army Hosp	4C
30.	LaFlamme Dental Clinic	2B
31.	Rohde Dental Clinic	4B
32.	Dependent Dental Clinics	4B
33.	Veterinary Activities	4E

NCO OPEN MESSES

34.	Main NCOOM & Pool	4B
35.	82d NCOOM & Pool	1B

OFFICERS OPEN MESSES

[illegible]	Pool & Golf Course	5C
3.	Annex	7D
38.	Airborne Annex	4D

POST EXCHANGE ACTIVITIES

39.	Main PX (Incl Post Ofc, Banks, Cafeteria, Etc)	4B
40.	Mallonee Village	6C
41.	Service Stations	4A,8B,6C,2D
42.	Admin Offices	5D

PROVOST MARSHAL ACTIVITIES

43.	Information Booth	6D
44.	Area Confinement Facility	2D
45	PM Office	5D
46.	Registration Vehicles, Firearms and NC Driver Testing	5D
47.	Vehicle Inspection	6D

RECREATION SERVICES

48.	Allen Pool	8C
49.	Atchley Pool	1C
50.	Hedrick Stadium	4D
51.	Hoskins Fish House	2B
52.	Lee Field House	4D
53.	Main Post Library	5D
54	McFayden Pond Picnic Area	3E
55.	McKellars Lodge	1D
56.	Playhouse	5D
57.	Recreation Equipment Rental	4E
58.	Riding Stables	4E
59.	Stryker Golf Course	7B
60.	Tennis Courts	4C,7C,6E
61.	Towle Stadium	1C
62.	Tucker Field House & Pool	1B
63.	Youth Center	4C
64.	Youth Activities Rec Area	7B,7A
65.	Bowling Alleys	1B,4B,5D

SCHOOLS, DEPENDENTS

66.	Butner	3B
67.	Holbrook	6C
68.	Irwin Jr High	5D
69.	Kindergarten & Nursery	3C
70.	Mallonee Village Nursery	6C
71.	McNair	3C
72.	Murray	3C
73.	Pope AFB	4E
74.	Bowley	5D

MISCELLANEOUS

75.	Commissary	6E
76.	Facilities Engineering	4E
77.	Fire Station	6C,2D,9B
78.	Museum, 82d Abn Div	2B
79.	Museum, Special Forces	5B
80.	Operation Awareness Rap House	4C,7C
81	Personnel Services Center	6E
82.	Range Control HQ	7D
83	Recycling Center	5D
84.	Retirement Services	6D
85.	Statue (Iron Mike)	7A
86.	Cemetery	7D

APPENDIX C:

OVERLAP OF RESPONSE COVERAGES FOR FORT BRAGG AND POPE AIR FORCE BASE

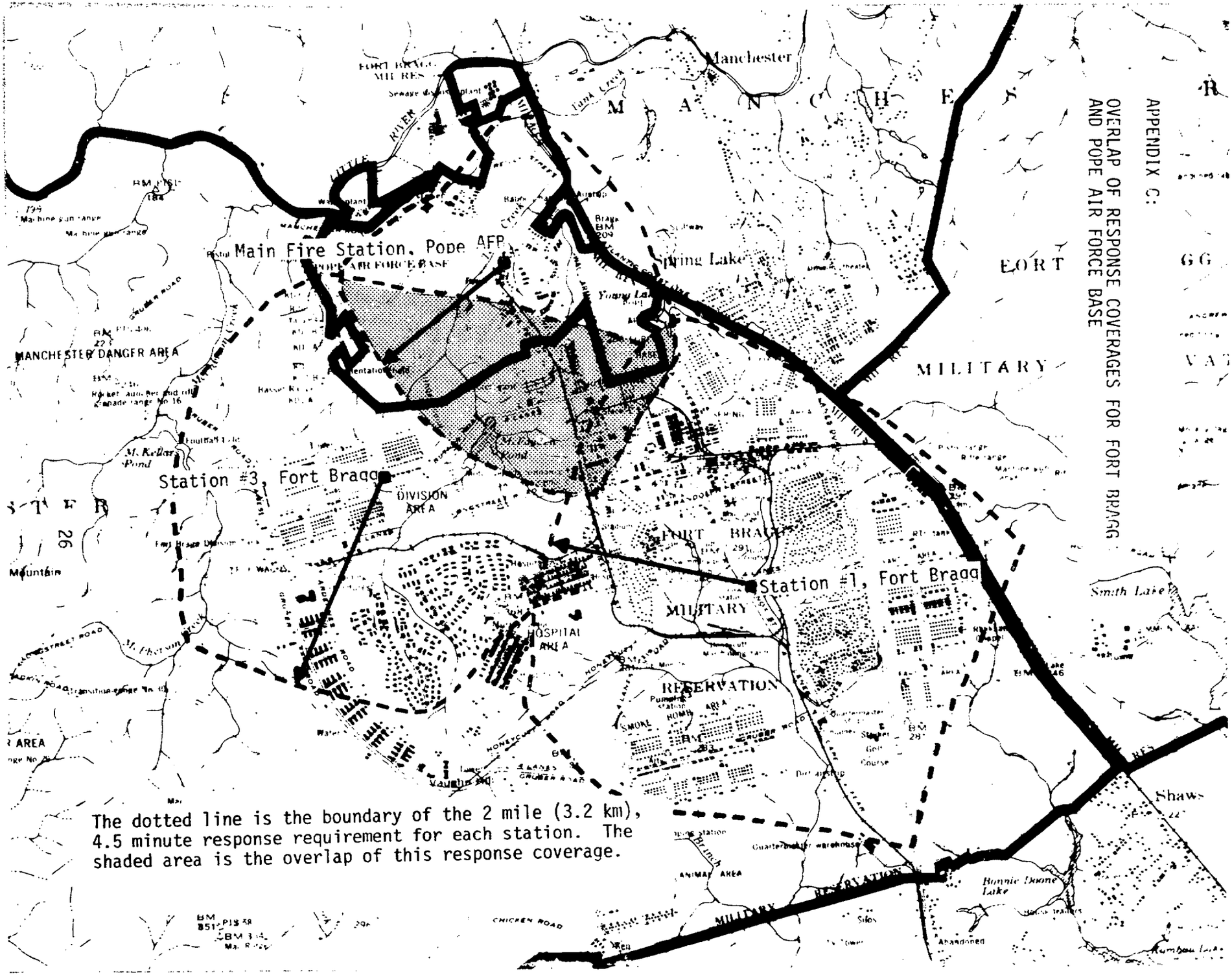

The dotted line is the boundary of the 2 mile (3.2 km), 4.5 minute response requirement for each station. The shaded area is the overlap of this response coverage.

APPENDIX D:

EXISTING RESPONSE COVERAGE FOR THE POPE AIR FORCE BASE FIRE DEPARTMENT

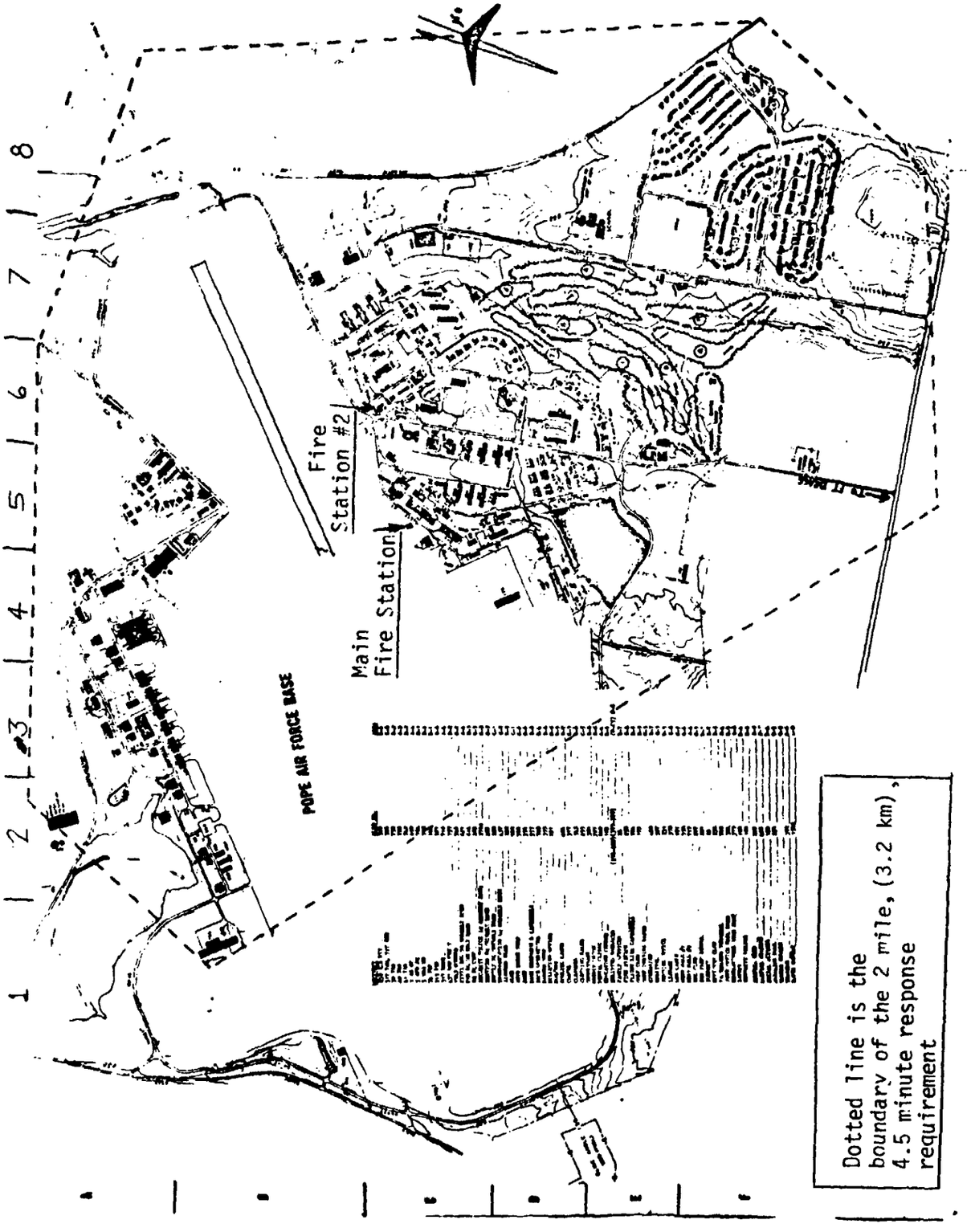

CERL DISTRIBUTION

Chief of Engineers
ATTN: DAEN-RDM
ATTN: DAEN-FEP
ATTN: DAEN-FEF (5)
Department of the Army
WASH DC 20314

Commander
317 Combat Support Group (MAC)
ATTN: DE (2)
Pope AFB, NC 28308

Commander
Headquarters-18th Airborne Corps
and Fort Bragg
ATTN: AFZA-FE (2)
Fayetteville, NC 28307

Directorate of Civil Engineering
ATTN: AF-PREMA/LTC C. Medlock
WASH DC 20330

Defense Documentation Center
ATTN: TCA
Cameron Station
Alexandria, VA 22314

Library of Congress (2)
Exchange and Gift Div
ATTN: American & British
WASH DC 20540

Defense Logistics Studies Information
Exchange (2)
U.S. Army Logistics Management Center
ATTN: AMXMC-D
Ft. Lee, VA 23801

Commander
Headquarters MAC, AF (2)
ATTN: DEMM/LTC E. F. Lednicky
Scott AFB, IL 62225

Commander
Headquarters USA Forces Command (2)
ATTN: AFEN-EA/H. A. Logan
Ft McPherson, GA 30330