AD/A-002 867

A STRUCTURAL WEIGHT ESTIMATION PROGRAM (SWEEP) FOR AIRCRAFT. VOLUME VII - FUSELAGE MODULE

R. Hiyama

Rockwell International Corporation

Prepared for:

Aeronautical Systems Division

June 1974

DISTRIBUTED BY:

NTIS

National Technical Information Service
U. S. DEPARTMENT OF COMMERCE

SECURITY CLASSIFICATION OF THIS PAGE (When Data Entered)

REPORT DOCUMENTATION PAGE

READ INSTRUCTIONS BEFORE COMPLETING FORM

1. REPORT NUMBER: ASD/XR 74-10

2. GOVT ACCESSION NO.:

3. RECIPIENT'S CATALOG NUMBER: AD/A-002867

4. TITLE (and Subtitle): A Structural Weight Estimation Program (SWEEP) for Aircraft
Volume VII - Fuselage Module

5. TYPE OF REPORT & PERIOD COVERED:

6. PERFORMING ORG. REPORT NUMBER:

7. AUTHOR(s): R. Hiyama

8. CONTRACT OR GRANT NUMBER(s): F33615-71-C-1922

9. PERFORMING ORGANIZATION NAME AND ADDRESS:
Rockwell International Corp, L.A. Aircraft Div
Los Angeles International Airport
Los Angeles, California 90009

10. PROGRAM ELEMENT, PROJECT, TASK AREA & WORK UNIT NUMBERS: FX2826-71-01876/C093

11. CONTROLLING OFFICE NAME AND ADDRESS:
Deputy for Development Planning
Air Force Systems Command
Wright-Patterson Air Force Base, Ohio

12. REPORT DATE: June 1974

13. NUMBER OF PAGES: 438

14. MONITORING AGENCY NAME & ADDRESS (if different from Controlling Office):

15. SECURITY CLASS. (of this report): Unclassified

15a. DECLASSIFICATION/DOWNGRADING SCHEDULE:

16. DISTRIBUTION STATEMENT (of this Report):
Approved for public release; distribution unlimited.

DDC
RECEIVED
JAN 7 1975
C

17. DISTRIBUTION STATEMENT (of the abstract entered in Block 20, if different from Report):

18. SUPPLEMENTARY NOTES:

19. KEY WORDS (Continue on reverse side if necessary and identify by block number):
weight estimation, structural weights, integrated computer programs, preliminary weight estimation, first-order weight estimations, aircraft structure weights, aircraft structural weight optimization, flutter optimization program, structural synthesis

20. ABSTRACT (Continue on reverse side if necessary and identify by block number):
Three computer programs were written with the objective of predicting the structural weight of aircraft through analytical methods. The first program, the structural weight estimation program (SWEEP), is a completely integrated program including routines for airloads, loads spectra, skin temperatures, material properties, flutter stiffness requirements, fatigue life, structural sizing, and for weight estimation of each of the major aircraft structural components. The program produces first-order weight estimates

DD FORM 1 JAN 73 1473 EDITION

Reproduced by
NATIONAL TECHNICAL INFORMATION SERVICE
US Department of Commerce
Springfield, VA. 22151

SECURITY CLASSIFICATION OF THIS PAGE (When Data Entered)

and indicates trends when parameters are varied. Fighters, bombers, and cargo aircraft can be analyzed by the program. The program operates within 100,000 octal units on the Control Data Corporation 6600 computer. Two stand-alone programs operating within 100,000 octal units were also developed to provide optional data sources for SWEEP. These include (1) the flexible airloads program to assess the effects of flexibility on lifting surface airloads, and (2) the flutter optimization program to optimize the stiffness distribution required for lifting surface flutter prevention.

The final report is composed of 11 volumes. This volume (volume VII) contains the methodology, program description, and user's information for the fuselage module of SWEEP.

PREFACE

This report was prepared by Rockwell International Corporation, Los Angeles Aircraft Division, Los Angeles, California, under Contract F33615-71-C-1922, No. FX2826-71-01876/C093. The work was performed for the Deputy for Development Planning, Air Force System Command, Wright-Patterson Air Force Base, Ohio, and extended from September 1971 to June 1974.

Eugene L. Bahns, ASD/XRHD, was the Air Force program manager. Leonard Ascani was the program manager for Rockwell International. Other Rockwell personnel contributing to the project included:

G. Hayase	- Mass Properties
R. Hiyama	- Mass Properties
D. Chaloff	- Mass Properties
C. Martindale	- Mass Properties
H. Rockwell	- Mass Properties
R. Allen	- Mass Properties
P. Wildermuth	- Airloads
G. Rothamer	- Airloads
T. Byar	- Airloads
S. Siegel	- Structural Dynamics
S. Mellin	- Structure and Fatigue
H. Haroldson	- Thermodynamics
D. Konishi	- Advanced Composites
C. Hodson	- Structural Dynamics

The final report was published in 11 volumes; the complete list is as follows:

Volume	
I	"Executive Summary"
II	"Program Integration and Data Management Module"
III	"Airloads Estimation Module"
IV	"Material Properties, Structure Temperature, Flutter, and Fatigue"
V	"Air Induction System and Landing Gear Modules"
VI	"Wing and Empennage Module"
VII	"Fuselage Module"
VIII	"Programmer's Manual"
IX	"User's Manual"
X	"Flutter Optimization Stand-Alone Program"
XI	"Flexible Airloads Stand-Alone Program"

TABLE OF CONTENTS

Section		Page
I	INTRODUCTION AND SUMMARY	9
	Program Objectives	9
	Background	9
	Approach to Weight Estimation	10
	Summary of Analysis Capabilities and Limitations	14
	Basic Structure Weight Estimation	14
	Geometry	14
	Loads	14
	Stiffness Requirements	15
	Materials	16
	Synthesis	16
	Major Frames	16
	Bulkheads	18
	Shell Structure	18
	Miscellaneous Basic Structure Weight Estimation	19
	Secondary Structure Weight Estimation	20
	Module Operation	21
	Module Input	21
	Module Output	24
	Module Structure	24
II	METHODS AND FORMULATIONS	30
	General Discussion of Methodology	30
	Basic Structure Synthesis	30
	Geometry Derivation	30
	External Geometry	31
	Unit Weight Moment of Inertia Calculations	38
	Internal Geometry	40
	Structural Geometry	45

Preceding page blank

Section	Page

Loads Derivation 50

Subroutine Usage 50
Definition of Variables 51
Input Error Handling 56
Ground Loads 57
Major Frame Coordinates 59
Major Frame External Loads 62
Body Airloads 75
Net Shell Loads 78
Critical Shell Design Loads 79

Material Properties 80
Shell Synthesis 87

Cover 88

Cover Model 89
Shear Strength 89
Cover Pressure Design 94
Local Panel Flutter 99
Acoustic Fatigue 103

Minor Frames 119

Minor Frame Model 119
General Instability 121
Forced Crippling 122

Longerons, Stringers 135

Longeron Model 135
Forced Crippling 136
Bending Strength 137
Bending Stiffness 141

Bulkheads 142

Geometry 142
Pressure and Design Criteria 143
Synthesis 144
Weight 148

Section		Page
	Major Frames	148
	Geometry	150
	Loads	152
	Synthesis	156
	Weight Estimation	159
	Basic Structure Weight	159
	Bulkheads and Frames	159
	Cover, Minor Frames, Longerons	163
	Miscellaneous Basic Structure	164
	Secondary Structure Weight	165
	Canopy	167
	Windshield, Windows, and Ports	167
	Flooring and Supports	170
	Stairway and Ladders	171
	Radomes	171
	Speed Brakes	172
	Doors, Panels, and Miscellaneous	172
III	PROGRAM DESCRIPTION	176
	General Discussion	176
	General Logic Flow	176
	General Maps	176
	Common	183
	Labeled Common	183
	Mass Storage Files	183
	Subroutine Descriptions	322
	Program FUS01	322
	General Description	322
	Arrays and Variables Used	322
	Arrays and Variables Calculated	322
	Labeled Common Arrays	322
	Mass Storage File Records	322
	Error Messages	322
	Subroutine GEOMF1	323
	Subroutine INERT1	325

Section		Page

	Subroutine GEOMF2	326
	Subroutine INERT2	326
	Subroutine FUSLD	327
	Subroutine FRMEG	339
	Subroutine FLDIN	342
	Subroutine FLDDT	344
	Subroutine DUMMY1	348
	Subroutine FARLD	350
	Subroutine FLDNT	352
	Subroutine MFCNTL	354
	Subroutine MATLF	355
	Subroutine MATLP1	356
	Subroutine QCRIT	357
	Subroutine FFRME	359
	Subroutine FRMND1	361
	Subroutine FRMND2	363
	Subroutine FRMLD	363
	Subroutine SFOAWE	365
	Program FUS02	367
	Subroutine FUSSHL	368
	Subroutine CUTOUT	388
	Subroutine LDCHK	389
	Subroutine GJ1GEO	391
	Subroutine GJ2GEO	393
	Subroutine LONGS	393
	Subroutine I1LONG	395
	Subroutine 12LONG	397
	Subroutine FPANEL	397
	Subroutine FHCMB	399
	Subroutine FCOVER	399
	Subroutine CVPRES	401
	Subroutine MINFR	403
	Subroutine FBEND	412
	Subroutine BLKHDS	416
	Subroutine DBLKHD	418
	Subroutine MINMUM	420
	Subroutine FWEIGH	421
	Subroutine PARTIT	425
	Subroutine MISCWT	426
	Subroutine SECOST	428
	Subroutine WTDIST	430
	Subroutine SUMMRY	430
	Subroutine SPRINT	431
	REFERENCES	435
APPENDIX A	MODULE FLOW CHARTS AND FORTRAN LISTS	441
APPENDIX B	FUSELAGE MODULE SAMPLE OUTPUT	830

LIST OF ILLUSTRATIONS

Figure	Title	Page
1	Detail weight report format for basic structure.	11
2	Detail weight report format for secondary structure.	12
3	Detail weight report format for doors, panels, and miscellaneous secondary structure.	13
4	Fuselage general functional flow diagram	25
5	Programmed shapes and correction factors	33
6	Internal structural geometry	43
7	Structural arrangement	49
8	Vehicle force system	52
9	Wing force system.	68
10	Stress-strain curve and curve fit control points	83
11	Material stress-strain curve evaluation for elastic and plastic properties	84
12	Shear buckling coefficient	91
13	Diaphragm stresses and deflections	97
14	Panel flutter mach number correction factor	101
15	Panel flutter parameter versus aspect ratio	102
16	Design chart skin and rib construction	105
17	Design chart skin and rib with bonded doubler.	106
18	Relative fatigue strengths of materials under random excitation	107
19	Random fatigue life aluminum clad 2024 and 7075 sheet. . . .	109
20	Structural sizing to acoustic fatigue for various arrangements	111
21	S-N diagram for Ti-6Al-4V annealed sheet	116
22	S-N diagram for 17-7PH CRES sheet	117
23	Curvature correction for acoustic fatigue.	118
24	First approximation of the angle of folds.	125
25	Maximum stress versus average stress for stiffeners.	130
26	Allowable stiffener stress factor.	132
27	Fuselage program output summary.	160
28	Subroutine flow diagram.	177
29	Fuselage general functional flow diagram	181

LIST OF TABLES

Table	Title	Page
1	Secondary Structure Weight Estimation	22
2	Subroutine List	27
3	List of Symbols in Loads Routines	53
4	Material Library Data	86
5	Skin and Rib Construction	113
6	Milled Skin and Rib Construction	114
7	Skin and Rib Construction 6Al-4V Titanium and 17-7PH Steel	115
8	Secondary Structure Weight Estimating Options	166
9	Common Arrangement	184
10	Common Region Variable List	185
11	CIND Array Variables	214
12	D Array Constants and Equation Parameters	218
13	EQUA Array Constants and Equation Parameters	223
14	FFLD Array Variables	236
15	FMP Array Variables	241
16	FMWT Array Variables	255
17	SCDT Array Variables	260
18	SCST Array Variables	264
19	SCWT Array Variables	269
20	SUMM Array Variables	272
21	S21 Array Variables	275
22	S22 Array Variables	278
23	S6 Array Variables	283
24	TM Array Variables	298
25	TMD Array Variables	306
26	TMS Array Variables	310
27	TOT Array Variables	316
28	TT Array Variables	317
29	IP Array Variables (IPRINT Block)	319
30	FDAT Array Variables (FDATT Block)	320
31	Mass Storage File Records	321
32	Load and Inertia Data Combinations When Component Airloads are Input	330
33	FUS Array Arrangement Input Component Loads	331
34	FUS Array Arrangement Input Net Loads	334
35	FUSDWI Array Arrangement	336
36	Scratch Arrays S1, S2, S3, and S4 as Used in the Synthesis Loop	370
37	T Array Variables Printed by Subroutine FUSSHL	375
38	T Array Variables Printed by Subroutine FUSSHL When Bulkhead Exists at Cut	385
39	T Array Variables Printed by Subroutine MINFR	404

Section I

INTRODUCTION AND SUMMARY

PROGRAM OBJECTIVES

The fuselage weight estimation program provides the weight analyst with a tool suitable for use in the preliminary design phase of system development. In this environment, the vehicle selection and search studies require rapid response in the development of comprehensive weight trade-off data. Program utility in the design cycle requires an approach that:

1. Evaluates fighter, bomber, and transport vehicle categories

2. Provides rational evaluation of the different vehicle design variables and criteria

3. Provides flexible inputs to allow handling of design options, local effects, and variables not built into the program

4. Minimizes user inputs, program size, and computer execution time

5. Provides sufficient output for user evaluation

6. Provides error handling capabilities to avoid catastrophic program aborts and to identify problems that require user corrective measures

These factors were prominent considerations in the planning, development, and organization of this program.

BACKGROUND

The need for rapid and accurate structural weight prediction methods has led to the expansion of statistical methods and to the adaptation of analytical procedures. A first-generation weight estimation program provided analytical capability for estimating the basic shell structure weights. Secondary structure component weight estimates were manually derived by using various statistical and empirical methods. The system required extensive peripheral data manipulations and exposed shortcomings which led to investigations into diverse areas of analysis.

The derivation of pounds, the primary product of an analytical weight estimating procedure, is dependent on sizing to a given set of requirements.

Most published analysis procedures check structure of known size for adequacy under a given set of constraints and criteria. The development of synthesis methods for structures of initially unknown size required the inversion of these conventional analysis procedures. The length and complexity of certain analytical methods used in detail design were not suited to the synthesis and optimization requirements of advanced conceptual studies. Procedures were developed to approximate these analytical methods. Certain design methods are based on empirical formulations and, therefore, were adaptable for use in this type of program.

Fuselage structure is composed of a large number of components which serve various functions. In the analytical approach, the pieces are estimated and then summed to obtain the total. Limited sensitivity to local perturbations and criteria is a shortcoming of the statistical method. The analytical approach presents the danger of error by omission. This latter factor has been a significant consideration in the development of an approach that estimates both the visible components and the unknowns in the preliminary design vehicle definitions. Compartments, partitions, and access doors and panels are examples of components which are not readily identifiable in the conceptual phase. This program, a product of these considerations, is a system which employs the composite merits of analytical, empirical, and statistical methods.

APPROACH TO WEIGHT ESTIMATION

The fuselage structural components serve a wide range of functions. For the purposes of weight estimating and accounting, these structural components are categorized as either basic or secondary structure according to the definitions in MIL-STD-1374. The weight estimating approach is based on calculating weights at the line item level of the detail weight statement report form. (See Figures 1, 2, and 3.)

The program estimates basic structure weight by sizing structural members to strength, stiffness, fatigue, and manufacturing requirements. These requirements are established through the analysis of design criteria, engineering data, and vehicle geometry.

The approach to sizing shell structure (cover, minor frames, longerons, or stringers) is that of a multistation analysis. Bulkheads and major frames are sized to their individual load requirements. The weights of these basic structure elements are sensitive to factors such as geometry, type of construction, material properties, temperature, loads (and loading criteria), acoustic fatigue, local panel flutter, cutout size and location, stiffness requirements, and manufacturing limitations. The method accounts for the differences between the theoretical program solutions and actual hardware weight by the application of user input factors to adjust the weights.

AN-9102-D

NAME _____

DATE _____

BODY GROUP
BASIC STRUCTURE

MODEL _____

REPORT _____

1						Fuselage or Hull				Booms
2				CODE NO.						
3				SECTION						
*4 BULKHEADS & FRAMES	Stations									
5										
6										
7										
8										
9										
10										
11										
12										
13										
14										
15										
16										
17										
18										
19										
20										
21										
22										
23										
24 MINOR FRAMES										
25 JOINTS, SPLICES & FASTENERS										
26 OVERTURN STRUCTURE										
27										
28 COVERING - UPPER BETWEEN LONGERONS										
29 - SIDE BETWEEN LONGERONS										
30 - LOWER BETWEEN LONGERONS										
31										
32 COVERING LONGITUDINAL STIFFENERS - UPPER BETW. LONG.										
33 - SIDE BETW. LONG.										
34 - LOWER BETW. LONG.										
35										
36										
37 LONGERONS - UPPER										
38 - LOWER										
39										
40										
41 LONGITUDINAL PARTITIONS - (STRUCTURAL)										
42										
43 FLOORING & SUPPORTS - (BASIC STRUCTURE)										
44										
45										
46										
47 FIREWALL - (STRUCTURAL)										
48										
49 KEELSONS										
50 KEEL										
51										
52 CHINE & SPRAY STRIPS										
53 STEP ASSEMBLY										
54 STAIRWAY - (STRUCTURAL)										
55 TOTALS										
56 TOTALS - BASIC STRUCTURE										
57 TOTAL (TO BE BROUGHT FORWARD)										

*List all main & watertight bulkheads & frames individually. Minor frames may be combined.

8

Figure 1. Detail weight report format for basic structure.

AN-9102-D
NAME _____
DATE _____

BODY GROUP
SECONDARY STRUCTURE

PAGE _____
MODEL _____
REPORT _____

		Fuselage or Hull				Boom	Speed Brakes
1							
2	CODE NO.						
3	SECTION						
4							
5	ENCLOSURES (EXCLUDING TURRET ENCLOSURES)						
6	CANOPY						
7	CANOPY-OPERATING MECHANISM						
8	-RAILS						
* 9	-CYLINDERS, PLUMBING, FLUID						
10							
11	GUNNER - TAIL						
12							
13	BOMBARDIER						
14	SIGHTING BLISTERS						
15							
16	WINDSHIELD (EXCLUDING BULLET PROTECTION)						
17							
18	WINDOWS & PORTS INCL. FRAMES						
19							
20							
21							
22							
23							
24							
25							
26							
27							
28	FLOORING & SUPPORTS (SECONDARY STRUCTURE)						
29							
30							
31	STAIRWAYS & LADDERS (FIXED)						
32							
33							
34	STERNPOST & FITTINGS						
35	NOSE BUMPER (HULL)						
36	RUBBING STRIPS						
37							
38							
39							
40	TAIL CONE						
41							
42							
43	SPEED BRAKES - STRUCTURE						
44	- SUPPORTS						
45							
46							
47							
48							
49							
50							
51							
52							
53							
54							
55	TOTALS						
56	TOTALS - SECONDARY STRUCTURE						
57	TOTAL (TO BE BROUGHT FORWARD)						

*From main distribution point to actuating unit.

9

Figure 2. Detail weight report format for secondary structure.

AN-9102-D

NAME _____

DATE _____

BODY GROUP
SECONDARY STRUCTURE
(DOORS, PANELS & MISCELLANEOUS)

PAGE _____

MODEL _____

REPORT _____

1 / 2 / 3	* Location	** Type Power	Area Sq. Ft.	Structure	Operating Mechanism: Mechanism & Controls	Power Trans.	Actuator	Lock Mech.	Emerg.
4 CODE NO.									
5 DOORS & FRAMES									
6 - LANDING									
7									
8									
9									
10 - BOMB									
11									
12									
13 - GUN									
14									
15 - AMMUNITION									
16									
17 - ROCKET									
18									
19 - LIFE RAFT									
20									
21 - ESCAPE									
22									
23									
24 - WATER TIGHT									
25									
26 - COMPARTMENT									
27									
28 - ENTRANCE									
29									
30									
31 - ACCESS									
32									
33									
34									
35 - ENGINE									
36									
37 - CAMERA									
38									
39 PANELS - (NON STRUCTURAL)									
40									
41									
42									
43									
44									
45									
46									
47									
48									
49 WALKWAYS, STEPS, GRIPS									
50									
51 FAIRING & FILLETS									
52 EXTERIOR FINISH									
53									
54 TOTALS									
55 TOTAL - SECONDARY STRUCTURE (DOORS, PANELS, MISC.)									
56 TOTALS FROM PGS. 8 & 9									
57 TOTAL - BODY GROUP									

*Indicate location for major doors by B - Booms, F or H for Fuselage or Hull.

**H - Hydraulic, E - Electrical, P - Pneumatic; power transmission from main distribution point to actuating unit.

10

Figure 3. Detail weight report format for doors, panels, and miscellaneous secondary structure.

Secondary-structure component weights are estimated by rule-of-thumb and empirical methods or by direct user input. The weights of these items are sensitive to factors such as vehicle type and usage, design criteria, specific item function, and dimensional and descriptive data input by the user.

SUMMARY OF ANALYSIS CAPABILITIES AND LIMITATIONS

BASIC STRUCTURE WEIGHT ESTIMATION

Geometry

The external shell sectional geometry is represented as a family of shapes (rounded rectangles) that may be defined by straight lines and circular arcs. The shape may vary from fully circular to fully rectangular. External geometry is described at the nose, tail, and eight intermediate stations. Shell structure is evaluated at a maximum of 19 synthesis cuts for which geometry is determined by interpolation between the described stations.

Internal geometry is defined by the location of decks and shrouds which, in conjunction with cutout definitions, are used to determine the shell torsional geometry and the shell and bulkhead geometry needed for the design of pressurized cabins and fuel compartments.

Certain fuselage shell shapes do not lend themselves to the programmed approximations. In this case, the program solution retains perimeter, the most significant geometry (weight) parameter, and adjusts depth and width to obtain a shape defined within the family of rounded rectangles.

Loads

The fuselage loads are determined for a free body in equilibrium. The external forces and inertia forces form a statically determinate balanced system. The balanced force system and the net fuselage loads are calculated for as many as 23 different flight and ground load conditions. Net shears and bending moments at the synthesis cuts are calculated for the conditions that induce vertical bending. Torsional loads, lateral shears, and lateral bending moments are not calculated. External forces used in the load computations are:

1. Nose airload (forebody lift)
2. Wing-body carryover airload (wing carryover lift)
3. Reactions at the interface of the fuselage with the wing, tails, landing gears, and nacelles

Net reactions from lifting surfaces, landing gear, and fuselage-mounted nacelles and stores are introduced to the fuselage at major frame locations. Lifting surface reactions are the result of combining airloads and lifting surface inertias. Vertical tail side airloads are used to determine reactions at vertical tail attach frames. These reactions are used only in the frame synthesis, since lateral bending of the fuselage is not analyzed. Fuselage inertia forces are determined from the distribution of:

1. Fuselage structure weight
2. Fuselage content weight

Although lateral and torsion loads are not calculated, the shell elements can be sized to user input bending and torsional stiffness requirements.

Internal pressure loads are defined for personnel, equipment, and fuel compartments. Pressure due to fuel or liquids is determined by combining vent pressure with the hydraulic forces due to vertical accelerations. Personnel and equipment compartment pressurization is directly related to the vehicle altitude spectrum. The cyclic nature of these forces affects structure life. Material static strength and fatigue allowables are used in the sizing of the compartment structure (covers and bulkheads). The evaluation of fuel cyclic pressure spectrum is not within the current program capabilities and, therefore, fuel compartment structure is sized to static strength requirements.

Prediction of acoustic pressures is not within the program capability. Procedures for sizing structure to prevent acoustic fatigue have been programmed and are actuated when acoustic pressures in decibels overall (db_{oa}) are input by the user.

Stiffness Requirements

Skin panel gages are increased as necessary to prevent local panel flutter. The critical speed-altitude point is selected by examining the vehicle supersonic flight envelope. Mach number and dynamic pressure are the parameters which are evaluated in making this determination.

Bending and torsional stiffness requirements are evaluated only when they are defined by user input. Stiffness available from sizing for strength and other criteria is compared against each stiffness requirement to determine whether additional material is required. Should available stiffness be less than that required, the program sizes structure to satisfy vertical stiffness prior to examining lateral bending stiffness.

Materials

Material properties in the form of stress-strain diagrams, strength and fatigue characteristics, and physical properties are stored in a permanent data bank. Elevated-temperature properties are obtained by interpolation of the permanent file data. Properties for covers, longerons, major frames, and minor frames are independently derived such that different materials may be selected for these structural members. Only one material may be specified for each structural member. It is not within the programmed capability, for example, to designate different materials for different cover panels. Strain compatibility between structural members determines allowable stress and the interaction between members under load.

Since temperature may vary with load condition, separate sets of materials data are calculated for each load condition. The critical loads and load conditions at each synthesis cut are determined by comparing the ratio of load to the appropriate material property for each of the selected load conditions. Cover ultimate shear strength is used to determine the critical shear load. Longeron (stringer) compression yield strength is used in the determination of critical up-and-down bending moments.

Synthesis

Major Frames

Major frames are designed for the redistribution of in-plane loading. Loads for some of these frames are defined in the course of calculating the vehicle flight and ground loads. Frames for which the program calculates loads, frame element sizes, and weights are:

1. Nose gear
    a. Trunnion frame
    b. Drag strut frame
2. Main gear
    a. Trunnion frame
    b. Drag strut frame

3. Wing

   a. Front spar frame

   b. Intermediate spar frame

   c. Rear spar frame

4. Horizontal tail

   a. Front spar frame

   b. Rear spar frame

5. Vertical tail

   a. Front spar frame

   b. Rear spar frame

6. Nacelle

   a. Forward support frame

   b. Aft support frame

7. Other external components

   a. Forward support frame

   b. Aft support frame

All of the foregoing listed frames may be discrete frames, may not exist on a specific configuration, or may be common frames. Common frames, those which occur at the same fuselage station, are designed for the combined loads from as many as three sources. An example of this condition is a frame which is used for reacting the wing rear spar, main landing gear trunnion, and forward nacelle support loads.

The program calculates the internal loads and frame element sizes at a maximum of 60 frame synthesis segments for each frame. The internal loads and frame geometry for each of the vehicle load conditions are evaluated to determine the requirement at each frame synthesis segment.

In addition to the 15 major frames synthesized by this program, there may be other major frames which are designed for local load occurrences that are not defined by the normal vehicle load conditions. Crew ejection and cargo loading ramp frames are special frames of this type. These two type of frames are estimated by statistical methods. Vehicle jacking frames,

required for redistributing jacking loads, are not evaluated by the program. Jacking points are normally located at existing major frames (nose gear, main gear, ramp, wing) to minimize any weight penalty. Correlation factors applied to the weights of calculated frames are assumed to provide for this condition.

Bulkheads

Pressure bulkheads may be located at any of the shell synthesis cuts. Geometry (external and internal) and pressure (personnel, equipment, fuel) at the shell cut are used to calculate the sizing and weight. Sizing procedures are based on stiffened sheet construction simply supported at the periphery. Curved bulkheads are not within the programmed capability. Minor frame material properties are used for bulkhead synthesis.

Shell Structure

The program evaluates either longeron or stringer construction semi-monocoque fuselages. Search procedures provide the capability for optimizing frame spacing and stringer spacing. The frame spacing control is such that either fixed spacing or optimization searches may be specified at each synthesis cut.

Stringer spacing or longeron position, frame spacing, and structural member sizing form a network of interdependent relationships which are used to evaluate cover, minor frame, and longeron or stringer requirements. Minimum gages and areas and spacing constraints are limiting factors in the sizing and optimization of the shell structural members.

Cover. The cover is designed for either milled or unmilled construction. The sizing for the upper, lower, and two side sectors is based on the individual design requirements. The sizing procedure consists of systematic evaluation for shear strength, local panel flutter, acoustic fatigue, and pressure. The side sector panels are designed to accommodate shear loads. If fuel loading is the pressure source, panels in different sectors may have different design pressures. Sizing for pressure accounts for differences in curvature, when side sector curvature is not the same as that of the upper and lower sectors. The pressure evaluation checks bending and diaphragming action between supports (frames, stringers, or longerons) versus hoop stress to determine the primary design mode. Hoop stress calculations are based on the nominal radius of curvature of each sector. The nominal radius of curvature is the true radius for circular shell shapes and is infinite for rectangular shapes, and is estimated via special procedures for cross sections of rounded rectangle shape.

The nominal radius of curvature is also used to calculate curvature corrections for acoustic fatigue and the shear and compression buckling coefficients.

Should a required torsional stiffness be specified, the required cover thickness is calculated. Two values for required cover thickness are calculated to distinguish the difference in geometry (cutouts and decks) immediately forward and aft of the synthesis cut.

Minor Frames. Minor frame sizing is determined for each of the four shell sectors. Frame sizing is calculated to satisfy general shell stability and acoustic fatigue. The side sector is also checked to resist forced crippling loads from the side cover panel.

Longerons/Stringers. The longerons or stringers are sized to provide bending strength and, if specified, stiffness requirements.

For longeron construction, bending strength and stiffness is provided by the primary longerons. The sizing procedure evaluates bending strength and stiffness of the cover, secondary longitudinal members, and cutout longerons to determine the primary longeron requirements. If cutouts or their effects (reduced panel effectiveness) exist at a synthesis cut, minimum area members (cutout longerons) are located at the edges of the cutout. The longeron compression sizing check combines the compression - induced load from the cover in diagonal tension with the load due to shell bending moment. Since the induced compression load is the maximum value between frames, it is not used in the sizing of tension longerons.

For stringer construction, primary bending strength is provided by the upper and lower sector stringers. Side sector stringers are sized to resist forced crippling loads from the side panel. The procedure evaluates the bending load reacted by the cover and side stringers to determine upper and lower sector stringer sizing. If cutouts or their effects exist at a synthesis cut, cutout longerons are located at the edges of the cutout. Cutout longeron area is sized to replace the capability of the stringers that are deleted or ineffective. Incremental vertical bending stiffness in excess of strength is provided by the upper and lower stringers or, if they exist, by the cutout longerons. Incremental side bending stiffness is provided by the side stringers.

MISCELLANEOUS BASIC STRUCTURE WEIGHT ESTIMATION

Fitting weights are estimated for the transfer of loads at the interface of the wing, horizontal tail, vertical tail, nacelle, and any other fuselage-mounted component. Landing gear fittings are not calculated, since they are included as part of the gear weight estimate. The fitting weights are derived by a statistical equation based on loads and major frame material properties.

A weight estimate for engine drag beams is made on buried-engine concepts. The statistical approach for this item is based on engine thrust.

The estimate for joints, splices, and fastener weights is based on a fraction of the cover and longitudinal member weights.

The longitudinal partition and deck weight estimate is based on a fraction of the cover and minor frame weights. This method has been selected, since the location of these items is not readily identifiable in the vehicle conceptual phase.

Flooring and supports in the cabin area of transport vehicles are considered to be basic structure. The weight estimate for these components is based on unit weights dependent on the type of floor used and the floor width and surface area.

SECONDARY STRUCTURE WEIGHT ESTIMATION

The programmed methods estimate the weight of secondary structure components that are usually present on fighter, bomber, or transport class vehicles. Three different estimating procedures have been programmed. In the initial conceptual phase, when detail geometric descriptions are not available, a checklist approach may be used. This approach uses rule-of-thumb estimates for certain secondary structure components. When further information becomes available, the component weight may be based on description of geometry, function, and flight environment. The third approach is to provide for user input of component weights. All three approaches may be used in any one computer run. The secondary structure components and the applicable estimating options for each are shown in Table 1.

Most line items that appear on the detail weight report form (see Figures 2 and 3) are individually estimated. However, the programmed procedure for estimating miscellaneous access door weight includes access provisions which usually are not defined in the vehicle conceptual phase. The doors that are consolidated into this grouping provide access for:

- Fuel tanks
- Equipment compartments
- Batteries
- Camera
- Horizontal tail

- Inspection
- Miscellaneous

Item 12 in Table 1 is allocated for user input of any unusual component that is not within the program capability.

MODULE OPERATION

The program is written in FORTRAN extended programming language for operation on the CDC6600 computer and is structured to operate within 50,000 octal core locations. Execution time varies with design option, number of shell synthesis cuts, and number of major frame synthesis cuts. Normal execution time is approximately 10 system seconds per case. For a stringer construction case exercising the search options, core time should not exceed 60 system seconds.

The Fuselage module operates within SWEEP either as a stand-alone program or in conjunction with other modules. The mode of operation is controlled by the SWEEP control program.

In the stand-alone mode, the SWEEP control program calls only the Input Data Processing module (READ), the Fuselage module, and, if designated, the Final Output module (OUTPUT). All input data required by the Fuselage module are initially set up by the user, read into SWEEP by the Input Data Processing module, and set up in labeled common and mass storage file records for use by the Fuselage module.

When the Fuselage module is operated in conjunction with other SWEEP modules, input data required by the Fuselage module are set up partly by the user, and partly by other modules in the form of calculated data. As in the case of stand-alone operation, these data are written to mass storage and labeled common, and made available when the Fuselage module is called into execution.

Specific input data requirements and deck arrangement instructions for the SWEEP program are discussed in the Users' manual.

MODULE INPUT

Specific inputs to the Fuselage module are discussed in the maps and program descriptions contained in Section III of this volume. As previously mentioned, these are obtained directly from mass storage records and labeled common.

TABLE 1. SECONDARY STRUCTURE WEIGHT ESTIMATION

Item	Secondary Structure Components	Weight Estimate Options		
		Rule-of-Thumb	Descriptive Data	Input Weight
1.	Pilot's canopy and mechanisms	x	x	x
2	Navigator/strike officer canopy and mechanisms	x	x	x
3	Windshield and framing	x	x	x
4	Cockpit windows and ports		x	x
5	Cabin windows and ports		x	x
6	Cockpit flooring and supports - secondary structure	x	x	x
7	Stairway and ladder	x		x
8	Nose radome and mechanisms	x	x	x
9	Aft radome and mechanisms	x	x	x
10	Miscellaneous radomes		x	x
11	Speed brakes		x	x
12	Weight of secondary structure not within program capability			x
13	Main landing gear door and mechanisms		x	x
14	Nose landing gear door and mechanisms		x	x
15	Aft cargo doors and mechanisms		x	x
16	Side cargo doors and mechanisms		x	x
17	Forward loading ramp and mechanisms		x	x
18	Forward ramp toe/extension		x	x
19.	Aft ramp and mechanisms		x	x

TABLE 1. SECONDARY STRUCTURE WEIGHT ESTIMATION (CONCL)

Item	Secondary Structure Components	Weight Estimate Options		
		Rule-of-Thumb	Descriptive Data	Input Weight
20	Aft ramp toe/extension		x	x
21	Internal pressure door		x	x
22	Weapons bay doors and mechanisms		x	x
23	Gun access doors		x	x
24	Ammunition access doors		x	x
25	Emergency exits - flight	x	x	x
26	Emergency exits - ground	x	x	x
27	Paratroop doors	x	x	x
28	Spoilers, deflectors, paratroop doors	x	x	x
29	Entrance doors	x	x	x
30	Miscellaneous access doors	x		x
31	In-flight refueling		x	x
32	Ram-air turbine doors		x	x
33	Engine removal doors	x	x	x
34	Accessory access doors	x	x	x
35	Thermal protection panels		x	x
36	Main landing gear pod		x	x
37	Miscellaneous fairings	x	x	x
38	Dorsal fin panels		x	x
39	Walkways, steps, and grips		x	x
40	Antiskid protection		x	x
41	Exterior finish	x		x
42	Interior finish	x		x

The following is a summary of the types of inputs required by the module for program execution:

1. Basic constants used in fuselage synthesis equations: ≤ 240 inputs

2. Fuselage configuration-dependent design data: typically 175 to 200 inputs

3. Loading condition and airloads data: 28 inputs per loading condition

4. Mass properties data (weights and inertias): approximately 70 inputs per weight/wing-sweep combination

5. Mach-altitude profile data: 20 inputs

6. Materials data: ≤ 300 inputs per material used

7. Program print indicators.

MODULE OUTPUT

Module output is controlled by user specifications. The output consists of input data tables, loads and sizing data tables, weight summary and balance, and intermediate calculation arrays. Sample output tables are shown in Appendix B. Warning and error messages are printed when erroneous or incompatible data are encountered. The program default procedure appears as part of the message.

MODULE STRUCTURE

The Fuselage module is structured into two overlays. The first overlay consists of one control program and 20 subroutines. This link develops external shell geometry, calculates net loads, processes material properties, and calculates major frame sizing and weight. The second overlay consists of one control program and 25 subroutines. This link sizes shell structure members and pressure bulkheads, and calculates shell, bulkhead, miscellaneous component, and secondary structure weights. The link also processes the weight data to determine fuselage center of gravity and performs the primary output function.

Figure 4 is the functional flow diagram of overlays which form the fuselage weight estimation program. The diagram depicts the major data manipulation and search operations of the program. Table 2 shows the routines for each of the functional groupings.

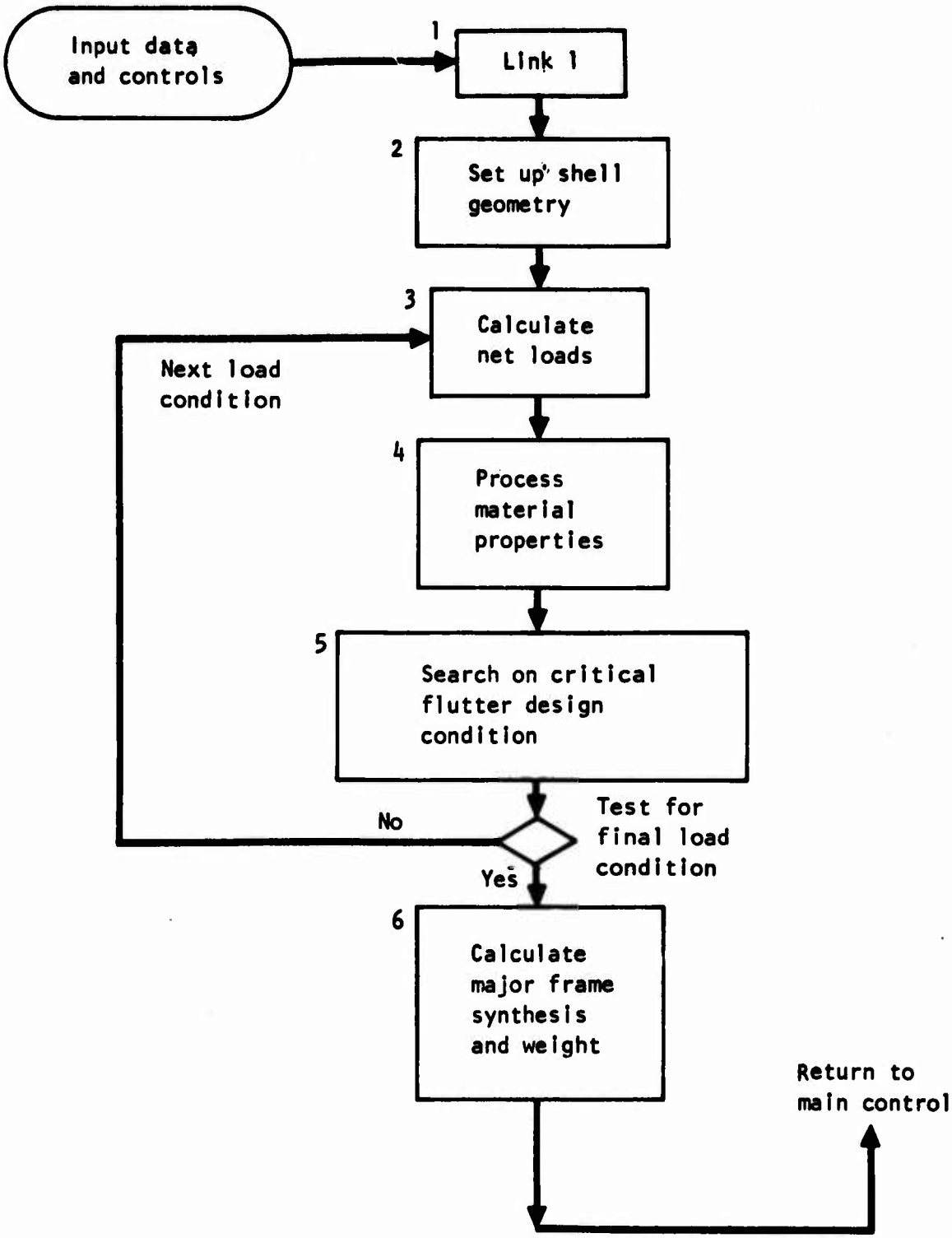

Figure 4. Fuselage general functional flow diagram.

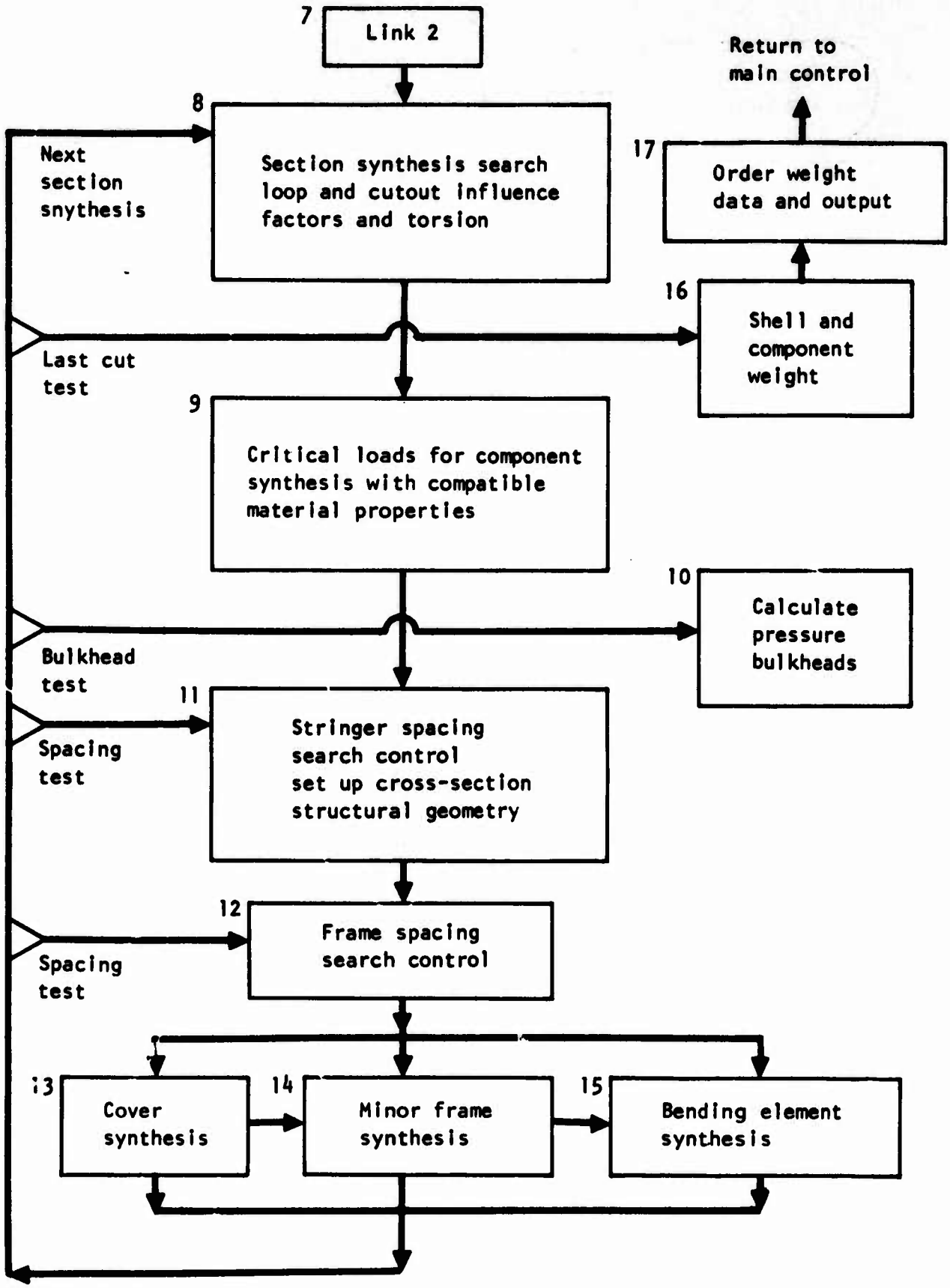

Figure 4. Fuselage general functional flow diagram (concl).

TABLE 2. SUBROUTINE LIST

FUSELAGE WEIGHT ESTIMATION SUBROUTINES
BY FUNCTIONAL GROUPINGS

1. LINK 1 CONTROL AND DATA MANIPULATION
   PROG. FUS01 - PROGRAM FOR FIRST FUSELAGE OVERLAY

2. SHELL EXTERNAL GEOMETRY AND COORDINATES
   SUBR. GEOMF1 - FUSELAGE EXTERNAL SHELL GEOMETRY FOR ROUNDED RECTANGLE
   SUBR. INERT1 - UNIT PITCH, ROLL, YAW INERTIAS FOR ROUNDED RECTANGLES
   SUBR. GEOMF2 - DUMMY - POTENTIAL FOR ELLIPTICAL SHAPES FOR SHELL GEOM
   SUBR. INERT2 - DUMMY - POTENTIAL USE FOR ELLIPTICAL UNIT INERTIAS

3. FUSELAGE NET LOAD CALCULATIONS
   SUBR. FUSLD - FUSELAGE LOADS CONTROL
   SUBR. FRMEG - LOCATE EXTERNAL SUPPORT POINTS FOR WING, TAILS, L.G., ETC
   SUBR. DUMMY1 - CHECK COMPATIBILITY OF DATA AND FORCE STAT. OR DYN. BAL.
   SUBR. FLDIN - REORDER INPUT NET LOADS
   SUBR. FLDDT - SETUP EXTERNAL LOADS BY CONDITION TYPE
   SUBR. FARLD - DISTRIBUTE LIFT LOADS OF FUS. NOSE AND WING CARRYOVER
   SUBR. FLDNT - CALC. NET FUSELAGE SHEAR AND MOMENT DIAGRAMS

4. MATERIAL PROPERTY DATA BY CURVE FIT AND INTERPOLATION
   SUBR. MFCNTL - DEVELOP MATERIAL PROPERTIES FROM LIBRARY DATA
   SUBR. MATLF - INTERPOLATION FOR DESIRED TEMPERATURE ON MATERIAL DATA
   SUBR. MATLP1 - MATERIAL PRINT - FUSELAGE COVER, LONGERONS, FRAMES

5. SEARCH ON CRITICAL LOCAL PANEL FLUTTER DESIGN PARAMETERS
   SUBR. QCRIT - DETERMINE CRITICAL DYNAMIC PRESSURE FOR PANEL FLUTTER

TABLE 2. SUBROUTINE LIST (CONT)

FUSELAGE WEIGHT ESTIMATION SUBROUTINES
BY FUNCTIONAL GROUPINGS (CONT)

6. MAJOR FRAME STRUCTURAL SYNTHESIS AND WEIGHTS
SUBR. FFRME - MAJOR FRAME SYNTHESIS CONTROL,
SUBR. FRMND1 - DEVELOP FRAME NODES FOR ROUNDED RECTANGULAR GEOMETRY
SUBR. FRMND2 - DUMMY - POTENTIAL FOR FRAME NODES FOR ELLIPTICAL GEOM.
SUBR. FRMLD - ELASTIC CENTER APPROACH TO INTERNAL RING LOADS
SUBR. SFOAWE - FRAME SYNTHS. FOR COMPOSITE INTERN. LOADS AND MATERIAL

7. LINK 2 CONTROL
PROG. FUSO2 - PROGRAM FOR SECOND FUSELAGE OVERLAY

8. SECTION SYNTHESIS CONTROL, INTERNAL SHELL GEOMETRY AND CUTOUT INFLUENCE PARAMETERS
SUBR. FUSSHL - SHELL SYNTHESIS CONTROL
SUBR. CUTOUT - DEVELOP PANEL NET EFFECTIVENESS DUE TO CUTOUTS
SUBR. GJ1GEO - SECTION TORQUE GEOMETRY DUE TO CUTOUTS, DECKS, SHROUDS
SUBR. GJ2GEO - DUMMY - POTENTIAL FOR ELLIPTICAL GJ1GEO

9. CRITICAL DESIGN LOAD SEARCH
SUBR. LDCHK - SELECT CRITICAL DESIGN LOADS FOR SECTION SYNTHESIS

10. PRESSURE BULKHEAD DESIGN
SUBR. BLKHDS - LOCATE BULKHEADS - GEOM., - WEIGHT, PRESSURE LOADING
SUBR. DBLKHD - BULKHEAD SYNTHESIS
SUBR. MINMUM - OPTIMIZE BULKHEAD STIFFENER SPACING

11. LONGERON AND STRINGER SPACING CONTROL AND ARRANGEMENT
SUBR. LONGS - CONTROL FOR STRINGER SEARCH AND LONGERON LOCATION
SUBR. I1LONG - SECTION PROPERTIES FOR COVER, LONGERON/UNIT THICK, AREA
SUBR. I2LONG - DUMMY - POTENTIAL FOR ELLIPTICAL I1LONG

TABLE 2. SUBROUTINE LIST (CONCL)

FUSELAGE WEIGHT ESTIMATION SUBROUTINES
BY FUNCTIONAL GROUPINGS (CONT)

12. FRAME SPACING SEARCH CONTROL
SUBR. FPANEL - CONTROL FOR MINOR FRAME SPACING SEARCH

13. COVER SYNTHESIS
SUBR. FCOVER - COVER SYNTHESIS, STRENGTH, FLUTTER, ACOUSTICS
SUBR. CVPRES - COVER SYNTHESIS, PRESSURE FOR CABIN, FUEL OR COMPARTM.
SUBR. FHCMB - DUMMY - POTENTIAL FOR HONEYCOMB

14. MINOR FRAME SYNTHESIS
SUBR. MINFR - MINOR FRAMES - GENERAL STABILITY, FORCED CRIPPL, ACOUST.

15. BENDING ELEMENT SYNTHESIS
SUBR. FBEND - LONGERON - STRINGER, BENDING, FORCED CRIPPLING, STIFFNESS

16. SHELL AND COMPONENT WEIGHT CALCULATIONS
SUBR. FWEIGH - WEIGHT OF COVERS, LONGERONS, MINOR FRAMES, JOINTS, SPLICES, AND FASTENERS
SUBR. PARTIT - PARTITIONS - STATISTICAL WEIGHT ESTIMATE
SUBR. MISCWT - MISC. WEIGHTS - FITTINGS, ENGINE DRAG BEAM, EJEC. FRAME
SUBR. SECOST - WEIGHT OF SECONDARY STRUCTURE
SUBR. DBLKHD - BULKHEAD SYNTHESIS
SUBR. MINMUM - OPTIMIZE BULKHEAD STIFFENER SPACING

17. WEIGHT AND BALANCE SUMMARY AND OUTPUT
SUBR. SPRINT - FUSELAGE PRINT
SUBR. SUMMRY - SUMMARIZE WEIGHTS AND DETERMINE C.G. DATA
SUBR. WTDIST - DUMMY - POTENTIAL REDIST. WEIGHT FOR ITERATION

Section II

METHODS AND FORMULATIONS

GENERAL DISCUSSION OF METHODOLOGY

The methods and formulations adapted for use in this program treat various engineering principles encompassing many disciplines. Expertise in these disciplines was provided by specialists in each discipline. It is not the purpose nor is it within the scope of this documentation to explain the fundamentals associated with these disciplines. Discussions are based on the assumption that the reader is familiar with the theory and analysis procedures and, therefore, is oriented toward unique approaches, approximations, assumptions, and deviations from rigorous engineering methods.

This manual discusses methods and derivation of procedures as they affect each structural member. However, certain shell analysis methods are used to evaluate requirements which affect several structural members. In this situation, derivations are discussed in the order in which they are used in the program. As an example, discussion of forced crippling solutions for minor frames and longitudinal members are presented in detail with the minor frame analysis procedures.

BASIC STRUCTURE SYNTHESIS

GEOMETRY DERIVATION

The analytical sizing procedures are dependent on detail descriptions of structural geometry. In order to provide the required data and to minimize user input requirements, the programmed approach is based on a generalized approximation of shell shapes. This definition provides the information for modeling structural element arrangement and contour data.

Shell structural sizing is evaluated at a maximum of 19 synthesis cuts. These synthesis cuts are taken along the longitudinal axis and are located by the user to provide load and geometry sensitivity. Major frame sizing is calculated at a maximum of 60 frame synthesis segments located by equal spacing. In the discussions that follow, the term "cut" refers to those locations at which structure details (loads, sizing, geometry, etc) are evaluated, and the term "segment" refers to that portion of structure bounded by adjacent cuts.

External Geometry

Shell contour data at synthesis cuts are calculated in subroutine GEOMF1. Calculations in this routine determine the depth, width, vertical centroid, perimeter, shape parameters, and curvature at the cuts. Segment data in this routine consists of length, longitudinal centroid, surface area, and calculated volume.

The standard stability axis definitions following are used to define the vehicle coordinate system.

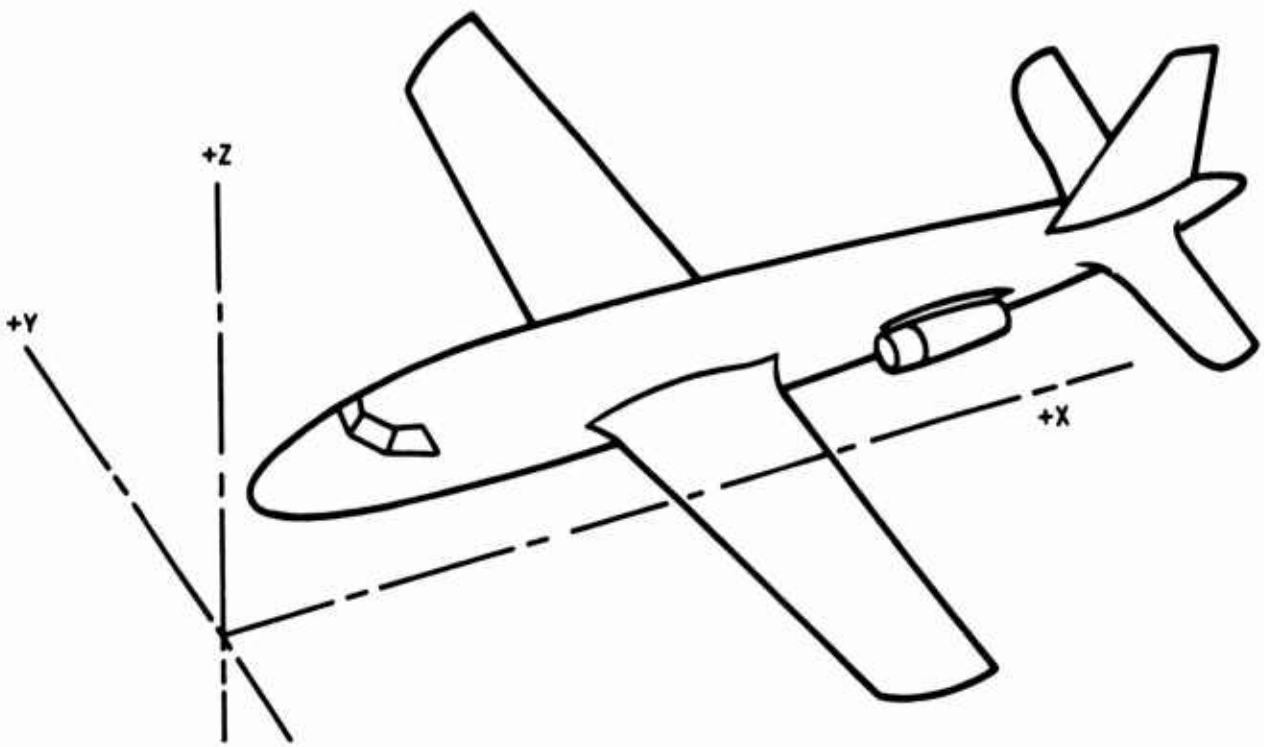

External shell geometry is initially defined as rounded rectangles at 10 longitudinal locations on the fuselage. The program subsequently develops cross-section geometries at the synthesis cuts through a process of interpolation between these 10 input geometry cuts. These input geometry cuts are located at the nose, tail, and eight intermediate stations. Sharp geometric changes, such as occur at the start of duct inlets, are described by double cuts immediately forward and aft of the shape transition. A sketch of the general shape and parameters at a cut follows.

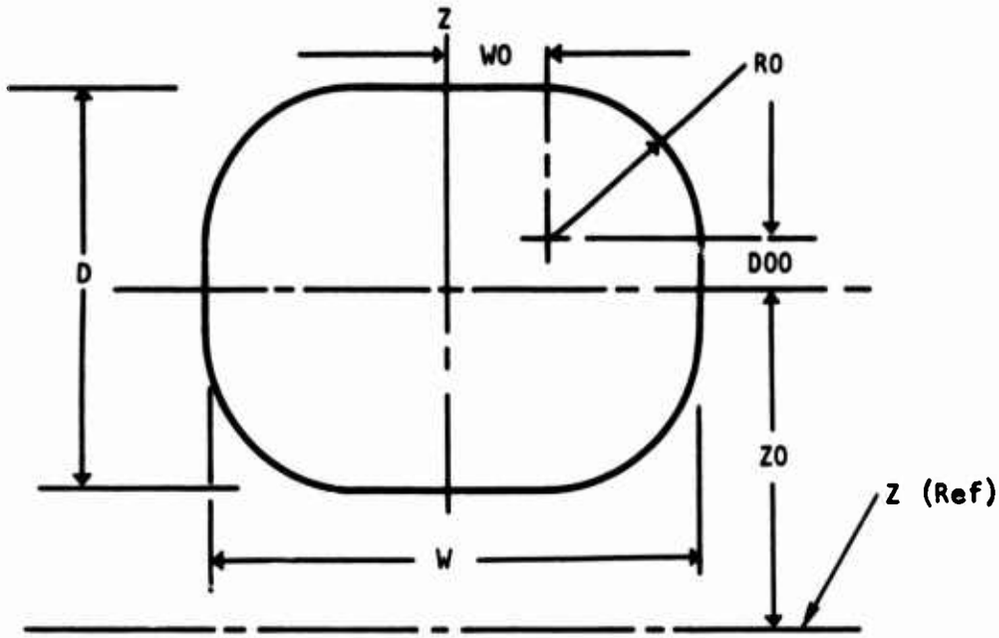

Either of two input formats may be used to define the geometry at the geometry cuts (XI):

1. Width (WI), depth (DI), vertical centroid (ZI), and perimeter (PI)

2. Width (WI), depth (DI), vertical centroid (ZI), and perimeter correlation factor (Kc)

If the perimeter is not readily available, perimeter correction factor (Kc) may be used to describe the shape. Figure 5 depicts the significance of Kc. The family of rounded rectangle shapes is defined within the region bounded by the curves for rectangular, vertical oval, and horizontal oval shapes. The intersection point of the curves for horizontal and vertical ovals represents a circular cross section. The perimeter is defined by the relationship:

$$PI = Kc \frac{\pi}{2} (DI + WI)$$

where

Kc = 1.0 indicates a circular shape

Kc = 1.273 indicates a rectangular shape

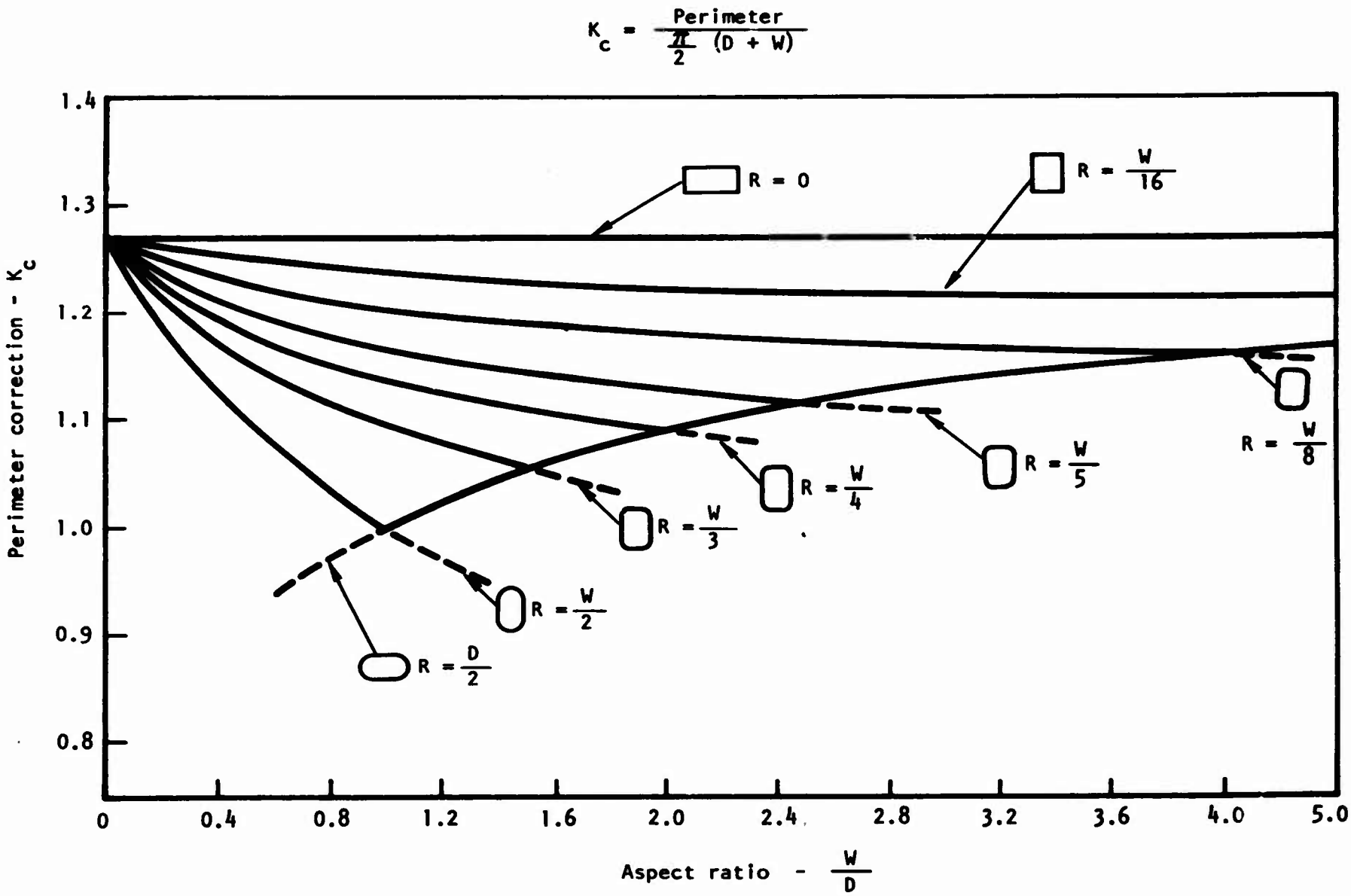

Figure 5. Programmed shapes and correction factors.

Depth (D), width (W), perimeter (PER), and vertical centroid (ZO) at the synthesis cuts (XO) are obtained by interpolating between the input geometry cuts.

The interpolated data are then used to obtain the other shape parameters. The perimeter is defined as:

$$PER = 4(DOO + WO) + 2\pi RO$$

and

$$WO = (W - 2RO)/2$$

$$DOO = (D - 2RO)/2$$

substituting and solving for the corner radius:

$$RO = \frac{2D + 2W - PER}{8 - 2\pi}$$

If the input parameters result in $RO<0$ or $2RO>W$ or D, the perimeter is maintained and the parameters RO, DOO, and WO are adjusted by a factor K.

If $RO<0$, the shape is adjusted to represent a rectangle in the following manner:

$$RO = 0$$

$$PER = K(2D + 2W)$$

$$K = \frac{PER}{2D + 2W}$$

If $2RO > W$ or D, the shape is adjusted to represent a horizontal or vertical oval in the following manner:

$$RO = \text{minimum of } W/2 \text{ or } D/2$$

$$X = \text{maximum of } W \text{ or } D$$

$$PER = K(2\pi RO + 2(X - 2RO))$$

$$K = \frac{PER}{2\pi RO + 2(X - 2RO)}$$

Then the adjusted values for DOO, WO, and RO are:

$$WO = K(W - 2RO)/2$$

$$DOO = K(D - 2RO)/2$$

$$RO = K(RO)$$

Should the geometry require adjustment by "K," a warning message is printed to indicate the amount of adjustment made to the depth and width at the section.

Structural sizing is accomplished for four shell sectors representing the upper, lower, and two sides. A 45-degree angle is used to define the limits of these sectors.

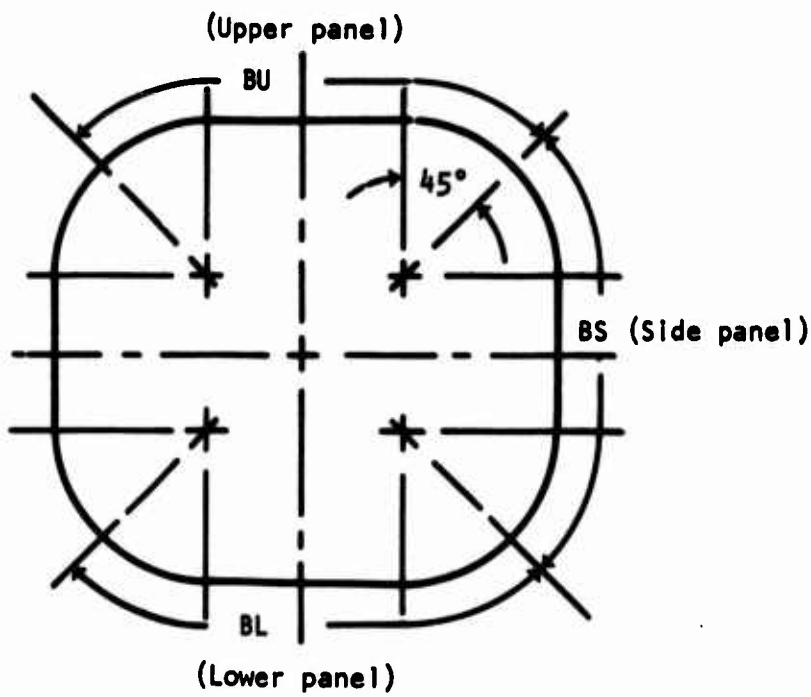

The peripheral length of the cover elements in these sectors are:

$$BU = BL = 2WO + \frac{\pi}{2} RO$$

$$BS = 2DOO + \frac{\pi}{2} RO$$

Curvature of the panels in the different sectors are also pertinent to the analytical procedures. The radius of curvature for circular fuselages is clearly defined. However, in the case of noncircular shapes, there is no true radius of curvature. Therefore, a nominal (weighted average) radius of curvature is defined in the following manner:

$$RCS^2 = [RCS - RO(1 - \cos 45^\circ)]^2 + (RO \sin 45^\circ + DOO)^2$$

Let

$$a = RO\,(1 - \cos 45^\circ)$$

$$b = RO \sin 45^\circ + DOO$$

then

$$RCS = \frac{a^2 + b^2}{2a}$$

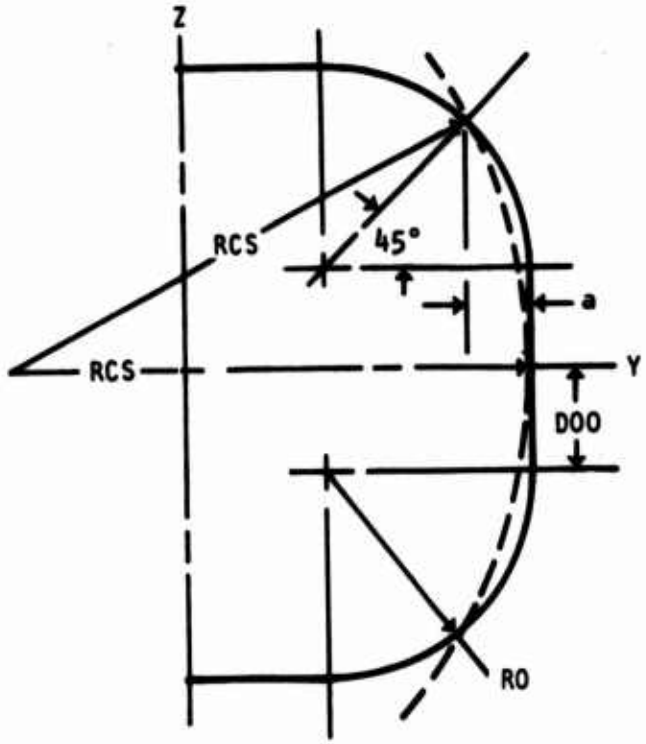

The nominal radius of curvature for the upper (RCU) and lower (RCL) sectors are calculated in the same manner. If the corner radius is less than 2 inches, the nominal radius of curvature is assumed to be infinite. A value of zero for curvature is used to designate the flat panel.

Segment geometric data are calculated from the cut data. The subscript n is used in the discussion that follows to denote the shell segment bounded by cuts j-1 and j.

Segment length (DELX) is determined by taking the difference between adjacent cuts. Surface area and volume are calculated by idealizing the segment as a truncated cone.

The radius ($\bar{R}$) of the end of the cone is:

$$\bar{R}_j = \frac{PER_j}{2\pi}$$

then the surface area (SF) is

$$SF_n = \pi(\bar{R}_j + \bar{R}_{j-1})\sqrt{DELX_n^2 + (\bar{R}_j - \bar{R}_{j-1})^2}$$

The cross-section area (A) at any cut is:

$$A_j = \pi RO_j^2 + 4DOO_j(WO_j + RO_j) + 4WO_j\ RO_j$$

and the volume (VOL) is:

$$VOL_n = \frac{DELX_n}{3}\left[A_j + A_{j-1}) + (A_j\ A_{j-1})^{1/2}\right]$$

The surface area and volume for the nose and tail segments are calculated in the same manner except the input nose and tail station geometry are used to define one end of the truncated cone. Area and volume of segments less than 2 inches in length, indicating sharp geometric transitions, are calculated by using geometry data at the aft end of the segment.

Intermediate segment centroids (XBAR) are assumed to be midway between the bounding cuts. The centroid of the nose and tail segments are calculated for the truncated cone. The nose segment centroid calculation is shown:

$$XBAR_1 = XO_1 - \frac{DELX_1}{3}\frac{(2\bar{R}_1 + \bar{R}_2)}{(\bar{R}_1 + \bar{R}_2)}$$

Unit Weight Moment of Inertia Calculations

Unit inertia due to fuselage and contents are calculated in subroutine INERT1. These unit inertias, when multiplied by the distributed weights in the load calculation routines (FFLDT, DUMMY1), define the local weight moment of inertia. Pitch (UIY), roll (UIX), and yaw (UIZ) unit inertia calculations are based on the following assumptions:

1. The weight of fuselage and contents are uniformly distributed within the volume of the segment; i.e., a homogeneous distribution.

2. The center of gravity of the weights is at the centroid of the segment.

Inertia about the centroid per pound of weight is defined as a function of the average segment geometry as follows:

where

$$D'_n = (DOO_j + DOO_{j-1})/2$$

$$W'_n = (WO_j + WO_{j-1})/2$$

$$R'_n = (RO_j + RO_{j-1})/2$$

$$A_n = \pi R'^2_n + 4D'_n(W'_n + R'_n) + 4W'_n R'_n$$

$$UIY_n = \frac{4/3\ W'_n(D'_n + R'_n)^3 + 4/3\ R'_n D'^3_n + \pi/4\ R'^4_n + \pi R'^2_n D'^2_n}{A_n}$$

$$+ DELX^2_n/12$$

$$UIZ_n = \frac{4/3\ D'_n(W'_n + R'_n)^3 + 4/3\ R'_n W'^3_n + \pi/4\ R'^4_n + \pi R'^2_n W'^2_n}{A_n}$$

$$+ DELX^2_n/12$$

$$UIX_n = [4/3\ W'_n(D'_n + R'_n)^3 + 4/3\ D'_n(W'_n + R'_n)^3 + 4/3\ R'_n(D'^3_n + W'^3_n)$$

$$+ \pi/2\ R'^4_n + \pi R'^2_n(D'^2_n + W'^2_n)]\ /A_n$$

For segments less than 2 inches in length, unit inertia calculations are based on geometry at the aft end of the segment. For the nose and tail segments, equivalent section radius is used to calculate the inertia. The nose segment calculations are as follows:

$$UIX_1 = \frac{3(\bar{R}_2^{\,5} - \bar{R}_1^{\,5})}{10(\bar{R}_2^{\,3} - \bar{R}_1^{\,3})}$$

$$UIY_1 = UIZ_1 = \frac{UIX_1}{2} + \frac{27}{80}(XO_1 - XBAR_1)^2$$

Internal Geometry

Subroutine GJ1GEO evaluates the internal structural arrangement in order to calculate a cover thickness to satisfy any input torsional rigidity (GJ) requirement at the synthesis cuts. Values calculated in this routine are also used in the evaluation of pressure bulkheads.

Evaluation of torsional capability is based on the presence of a single torque cell; and does not consider open sections which are inefficient relative to torsional deflections. Twist per unit length is:

$$\theta = \frac{T}{GJ}$$

where

θ = twist per unit length in radians per inch

T = torque in inch-pounds

G = panel shear modulus in pounds per square inch

J = the parameter in torsion theory which replaces the polar moment of inertia when the shape of the section is noncircular

For a thin-walled closed section of general shape, J is defined as follows:

$$J = \frac{4A^2}{\int \frac{ds}{t}}$$

where

A = enclosed cross-section area

ds = incremental peripheral length

t = panel thickness

If the thickness is assumed to be constant, J is:

$$J = \frac{4A^2 t}{P}$$

where

P = peripheral length

The thickness required to satisfy a given torsional rigidity is then:

$$t = \frac{(GJ)_{reqd} P}{4A^2 G}$$

Enclosed area and peripheral length of the cell are the only geometric definitions required to solve for thickness. These definitions are determined from the relationship between decking or shrouds, cutouts, and external geometry. Decks are horizontal partitions which are assumed to extend from mold line to mold line. They are defined at a vertical distance from the lower mold line and are located by input of a fraction of the total fuselage depth. Shrouds, which exist for buried-engine concepts and certain weapon bay arrangements, are defined by a radius and a vertical location

of the center of revolution. The presence of a cutout, inherent with engine removal and weapon bay door requirements, defines the orientation of the shroud and torque cell.

Boundary limits for decks, shrouds, and upper and lower cutouts are located at synthesis cuts. Therefore, at any synthesis cut, there may be two different conditions defining structure immediately forward and aft of the cut and two corresponding required thickness values. Section geometry evaluation accounts for this difference by calculating cross-section data on both sides of each synthesis cut.

Certain geometric combinations are not compatible with the assumption of a single closed section. The program approach for these arrangements is as follows:

1. Should decks or shrouds exist without any cutouts, the external section geometry is used to define the torque cell. The influence of the deck or shroud upon torsional stiffness will be ignored.
2. Should cutouts exist without any decks or shrouds, the external section geometry is used to define the torque cell, and the loss of torsional stiffness due to cutouts will be ignored.
3. Should both upper and lower panel cutouts exist in the presence of a deck or shroud, the section above the deck is used to define the torque cell, and the loss of torsional stiffness due to the upper panel cutout will be ignored.

Figure 6 depicts the different internal arrangements and the corresponding calculations immediately forward of a cut. Variables in the calculations are:

ACRS	Total shell cross-section area at cut
PER	Shell external perimeter at cut
ANTF, ANTA	Torque cell cross-section area immediately forward and aft of the cut, respectively
PERF, PERA	Torque cell peripheral length immediately forward and aft of the cut
PRDF, PRDA	Deck or shroud peripheral length immediately forward and aft of the cut
DEPF, DEPA	Depth of the torque cell immediately forward and aft of the cut
WIDF, WIDA	Width of cell between two walls (beaming distance) immediately forward and aft of the cut

a. Deck occurring within corner radius area

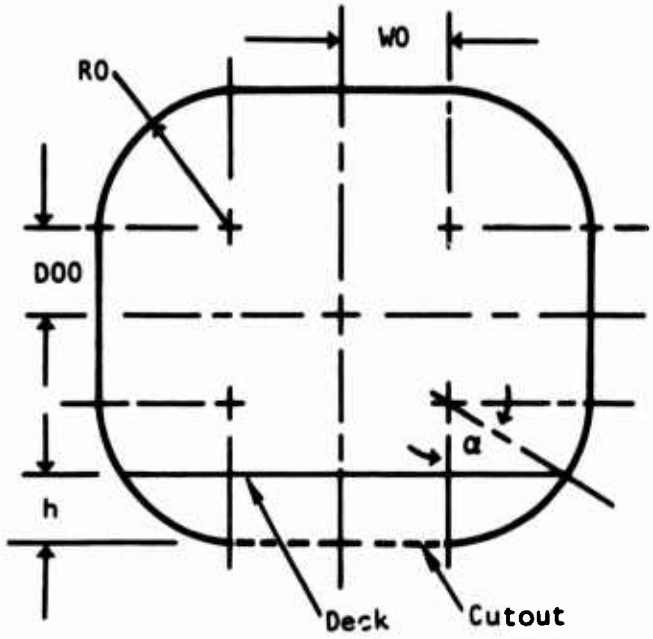

$$\alpha = \cos^{-1}\left(\frac{RO-h}{RO}\right)$$

$$PERF = PER + 2RO\ (\sin\alpha - \alpha)$$

$$PRDF = 2WO + 2RO \sin\alpha$$

$$ANTF = ACRS - 2hWO - RO^2\alpha + (RO-h)\ RO \sin\alpha$$

$$WIDF = 2\ (WO + RO)$$

$$DEPF = 2\ (DOO + RO) - h$$

b. Deck occurring in central section

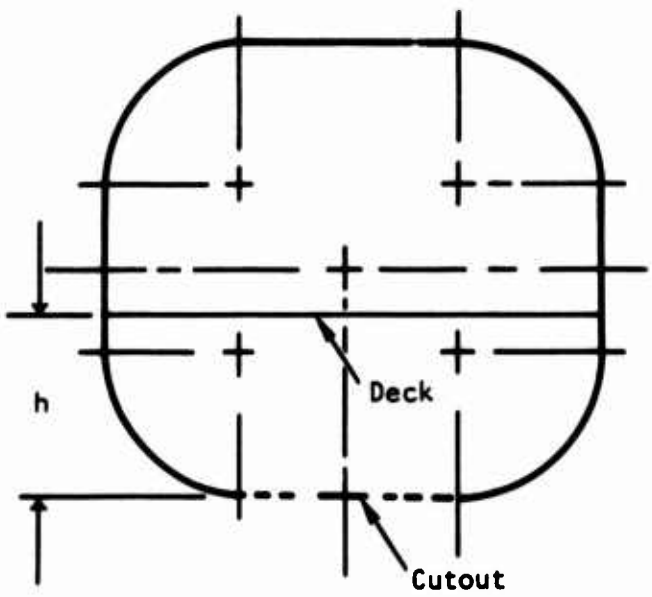

$$PERF = PER - \pi RO - 2h + 2\ RO$$

$$PRDF = 2\ (WO + RO)$$

$$ANTF = ACRS - 2(WO + RO)\ h + RO^2\left(\frac{\pi}{2} - 2\right)$$

$$WIDF = 2\ (WO + RO)$$

$$DEPF = 2\ (DOO + RO) - h$$

Figure 6. Internal structural geometry.

c. Single shroud

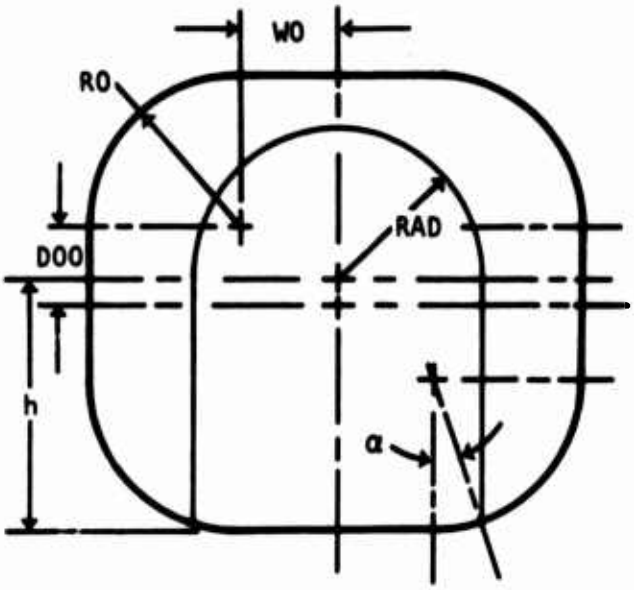

$$\alpha = \sin^{-1}\left(\frac{RAD-WO}{RO}\right)$$

$$PERF = PER - 2WO - 2RO\,\alpha + \pi RAD + 2h = 2RO\,(\cos\alpha - 1)$$

$$PRDF = \pi RAD + 2h + 2RO\,(\cos\alpha - 1)$$

$$ANTF = ACRS - \frac{\pi}{2}\,RAD^2 - 2h\,RAD + 2RO\,(RAD-WO) - RO^2\alpha - RO\cos\alpha\,(RAD-WO)$$

$$WIDF = WO + RO - RAD$$

$$DEPF = Z\,(DOO + RO) - RO\,(1 - \cos\alpha)$$

d. Double shroud

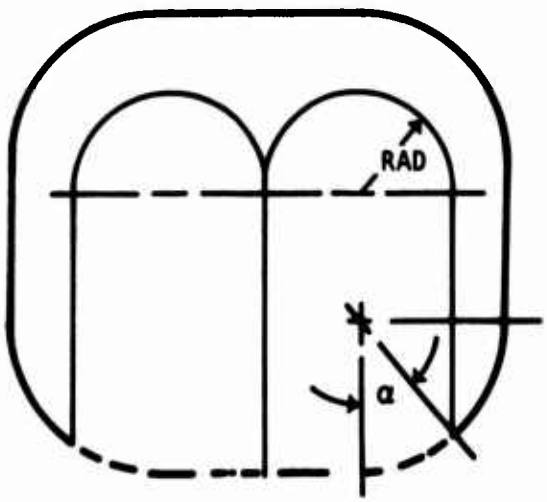

$$\alpha = \sin^{-1}\left(\frac{2\,RAD-WO}{RO}\right)$$

$$PERF = PER - 2WO - 2\,RO\,\alpha + 2\pi RAD + 4h + 2RO\,(\cos\alpha - 1)$$

$$PRDF = 2\pi RAD + 4h + 2RO\,(\cos\alpha - 1)$$

$$ANTF = ACRS - \pi RAD^2 - 4h\,RAD + 2RO\,(2RAD - WO) - RO^2\alpha - RO\cos\alpha\,(2\,RAD - WO)$$

$$WIDF = WO + RO - 2\,RAD$$

$$DEPF = 2\,(DOO + RO) - RO\,(1 - \cos\alpha)$$

Figure 6. Internal structural geometry (concl).

A pressurized section of the fuselage is normally the cellular portion of the shell. Therefore, the torque cell geometry is also representative of the pressurized compartment which can be used in the evaluation of pressure bulkheads. In this instance, the calculated geometric variables take on a different meaning:

ANTF, ANTA	Surface area of bulkhead enclosing compartments forward and aft of the cut, respectively
PERF, PERA	Perpheral edge of bulkhead immediately forward and aft of the cut
PRDF, PRDA	Peripheral edge of bulkhead at the junction with decks or shrouds immediately forward and aft of the cut

Structural Geometry

The arrangement of bending elements (covers, longerons, stringers) and their area moments and area moments of inertia exclusive of sizing (thickness, area) are calculated in subroutine I1LONG. These geometric data are used to approximate internal shell loads.

Precise internal load solutions are not within the scope of this program. However, if certain assumptions are made, internal loads can be approximated solely on structural arrangement. Structural arrangements for the rounded rectangle geometry idealization are shown in Figure 7. Maximum shear flow occurs at the midpoint of the side sector cover panel and is:

$$q = \frac{VQ}{I}$$

where

V = vertical shear at the synthesis cut

q = shear flow in pounds per inch

Q = area moment of the axial elements in one quadrant

I = total area moment of inertia of all the bending elements

Sizing of elements within any structural sector is assumed to be constant; i.e., all the stringers within a sector are of equal area.

If the structure is assumed to be symmetrical about the y-axis, the term Q is defined by the following summation for the upper quadrant.

$$Q = \int Z da = ALU\sum Z + ALS\sum Z + AIT\sum Z + TCU\int Z ds + TCS\int Z ds$$

where

ALU = area of each upper longeron or stringer

ALS = area of each side stringer

AIT = area of each secondary longitudinal member

TCU = thickness of upper sector cover

TCS = thickness of side sector cover

ds = incremental panel length

$\sum Z$ = summation of vertical coordinates of elements

The area moment of inertia is:

$$I = \int Z^2 dA = ALU\sum Z^2 + ALS\sum Z^2 + AIT\sum Z^2 + ALL\sum Z^2 + TCU\int Z^2 ds + TCS\int Z^2 ds + TCL\int Z^2 ds$$

where

ALL = area of each lower longeron

TCL = thickness of lower sector cover

Assuming that the major portions of the section masses are concentrated at the longerons or stringers and that the areas are equal, the equation

for shear flow may be simplified to an equation dependent only on element location.

$$A = ALU \approx ALS \approx ALL$$

$$Q \approx A\sum Z \text{ for one quadrant}$$

$$I \approx A\sum Z^2 \text{ for the total shell section}$$

and

$$q \approx \frac{VQ}{I} \approx V\frac{\sum Z}{\sum Z^2}$$

Shell bending stress at any vertical coordinate is:

$$\sigma = \frac{MZ}{I}$$

where

M = bending moment at the synthesis cut

Z = vertical coordinate of the member

I = total area moment of inertia as previously defined

Solving the foregoing equation for area:

$$A = \frac{MZ}{\sigma\sum Z^2}$$

The significant geometric variables used in these shell analysis procedures are calculated for each of the structural members. Area moment of inertia per unit thickness in the vertical and lateral modes are calculated for the cover panels in each of the structural sectors. The vertical area moment of inertia calculations are:

$$\left(\frac{I}{TCU}\right)_V = \left(\frac{I}{TCL}\right)_V = \int Z^2 ds$$

$$= 2WO(RO + DOO)^2 + 2RO\left[\frac{RO^2}{8}(\pi + 2) + RO\ DOO\sqrt{2} + \frac{\pi DOO^2}{4}\right]$$

$$\left(\frac{I}{TCS}\right)_v = \int z^2 ds$$

$$= \frac{4DOO^3}{3} + 4RO\left[\frac{RO^2}{8}(\pi-2) + RO\ DOO(2-\sqrt{2}) + \frac{\pi DOO^2}{4}\right]$$

The lateral area moment of inertia per unit thickness calculations are:

$$\left(\frac{I}{TCU}\right)_s = \left(\frac{I}{TCL}\right)_s = \int y^2 ds$$

$$= \frac{2WO^3}{3} + 2RO\left[\frac{RO^2}{8}(\pi-2) + RO\ WO(2-\sqrt{2}) + \frac{\pi WO^2}{4}\right]$$

$$\left(\frac{I}{TCS}\right)_s = \int y^2 ds$$

$$= 4DOO(RO + WO)^2 + 4RO\left[\frac{RO^2}{8}(\pi + 2) + RO\ WO\sqrt{2} + \frac{\pi WO^2}{4}\right]$$

Four primary longerons are assumed for longeron construction fuselages. These elements may be located either by angular definition or as a fraction of the total fuselage section depth as shown in Figure 7. Lateral location is determined by the intersection of the vertical coordinate and the shell mold line. Should the vertical coordinate be equal to the extreme contour coordinate, longerons are located at the furthest outboard position consistent with the contour parameters. Secondary longitudinal elements, should they be specified, are located at half the vertical and lateral coordinates of the primary longerons. The number of secondary longerons is designated by the user as any multiple of four. Longeron area moment of inertia per unit area is simply the square of the vertical and lateral coordinates.

Stringers are equally spaced starting with a half spacing at the top centerline. Systematic positioning of each stringer provides an accounting of the vertical and lateral coordinates in each of the structural quadrants. Stringer contribution to bending inertia as a function of the stringer area

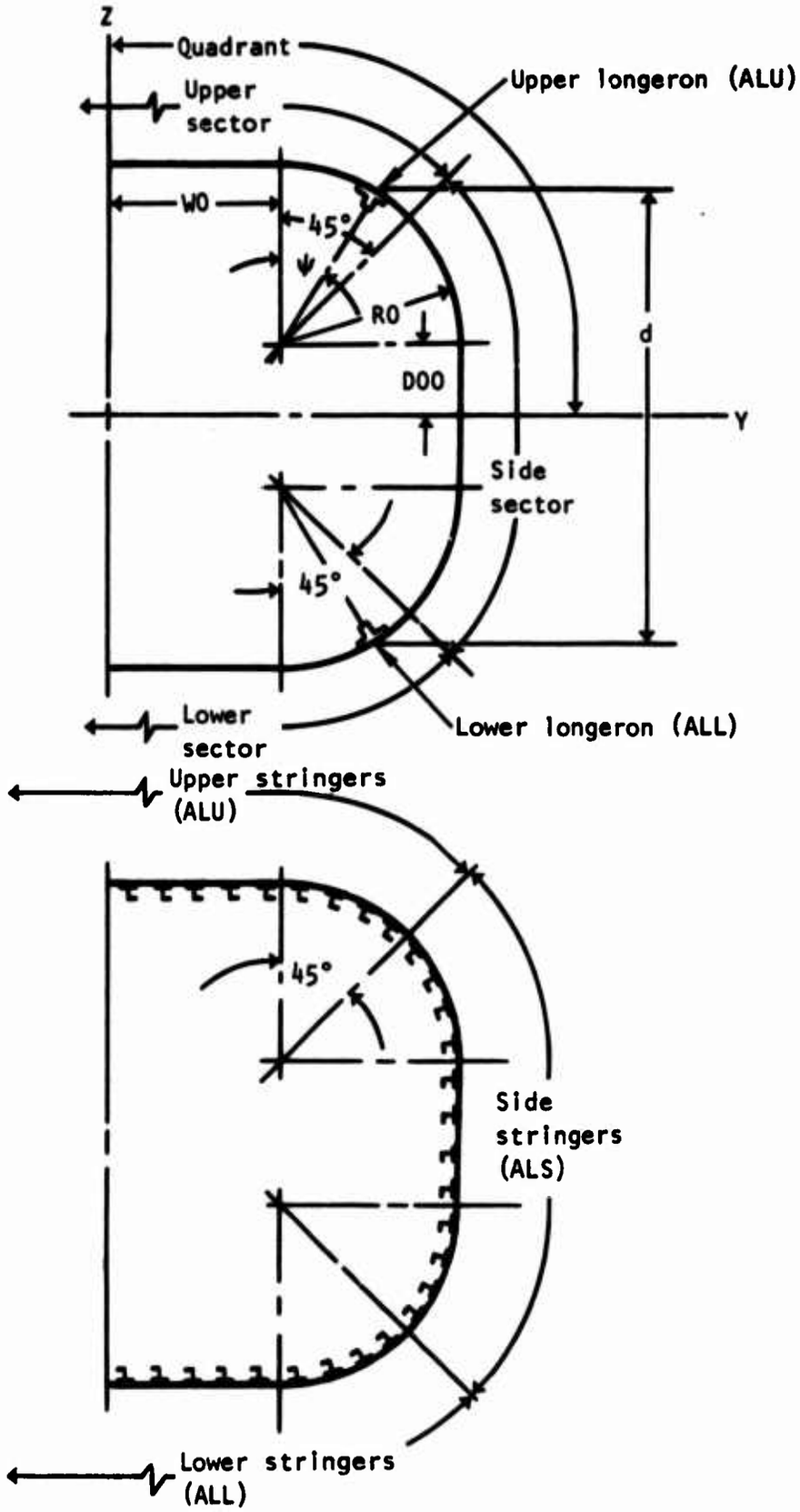

Figure 7. Structural arrangement.

is calculated for each quadrant. The area unit inertias for the upper quadrant stringers are determined by the following summations:

$$\left(\frac{I}{ALU}\right)_V = \sum Z_i^2$$

$$\left(\frac{I}{ALU}\right)_S = \sum Y_i^2$$

where

ALU = individual stringer area in the upper sector

Z_i = vertical coordinate of a specific stringer

Y_i = lateral coordinate of a specific stringer

The area unit inertias for stringers in the other quadrants are calculated by using the same approach.

The area moments (Q) of the primary bending elements are also determined as a function of area. These are simply the summations of elemental vertical and lateral coordinates.

LOAD DERIVATION

Subroutine Usage

Net fuselage loads are calculated for a maximum of 23 flight and ground conditions. These loads are calculated in the following grouping of subroutines:

1. FUSLD — Reads the airload, inertia, maneuver criteria, temperature, and speed-altitude data from mass storage files and controls calculating process by calling the appropriate subroutines. This routine also calls subroutine MFCNTL to calculate material properties at each design condition.

2. FLDIN — Processes input net loads data. This routine is currently inactive due to the organization of input data and program control logic.

3. DUMMY1 — Checks input component loads, inertia, and criteria data for compatibility, and makes corrections as required.

4. FRMEG — Calculates the coordinates of the interface between the fuselage and the externally supported components (frame reaction points) and any discrepancy which might exist due to geometric idealization.

5. FLDDT — Calculates gear loads for taxi and two-wheeled landing conditions, and the reactions introduced at the frames from the gears and other externally supported components, for all loading conditions.

6. FARLD — Distributes the forebody lift and body lift in the presence of the wing on the appropriate fuselage segments.

7. FLDNT — Calculates net (ultimate) vertical shear and bending moment at each of the shell synthesis cuts by integrating the distributed force system.

Load derivations are limited to calculation of vertical shear and bending moments for symmetrical conditions. The only effects of unsymmetrical conditions are the derivation of vertical tail support loads. Lateral load on the vertical tails from lateral gust and yawing conditions are introduced at the support frames.

Load calculations perform the following systematic procedure:

1. Insure that the equations of equilibrium are satisfied

2. Define the fuselage force system

3. Integrate to obtain shear and bending moments

Definition of Variables

Figure 8 illustrates the aerodynamic forces and the vehicle mass distributions used to calculate net fuselage loads. Definitions of these and other symbols are presented in Table 3. Symbols that are capitalized are also FORTRAN names of the variables as they appear in the program.

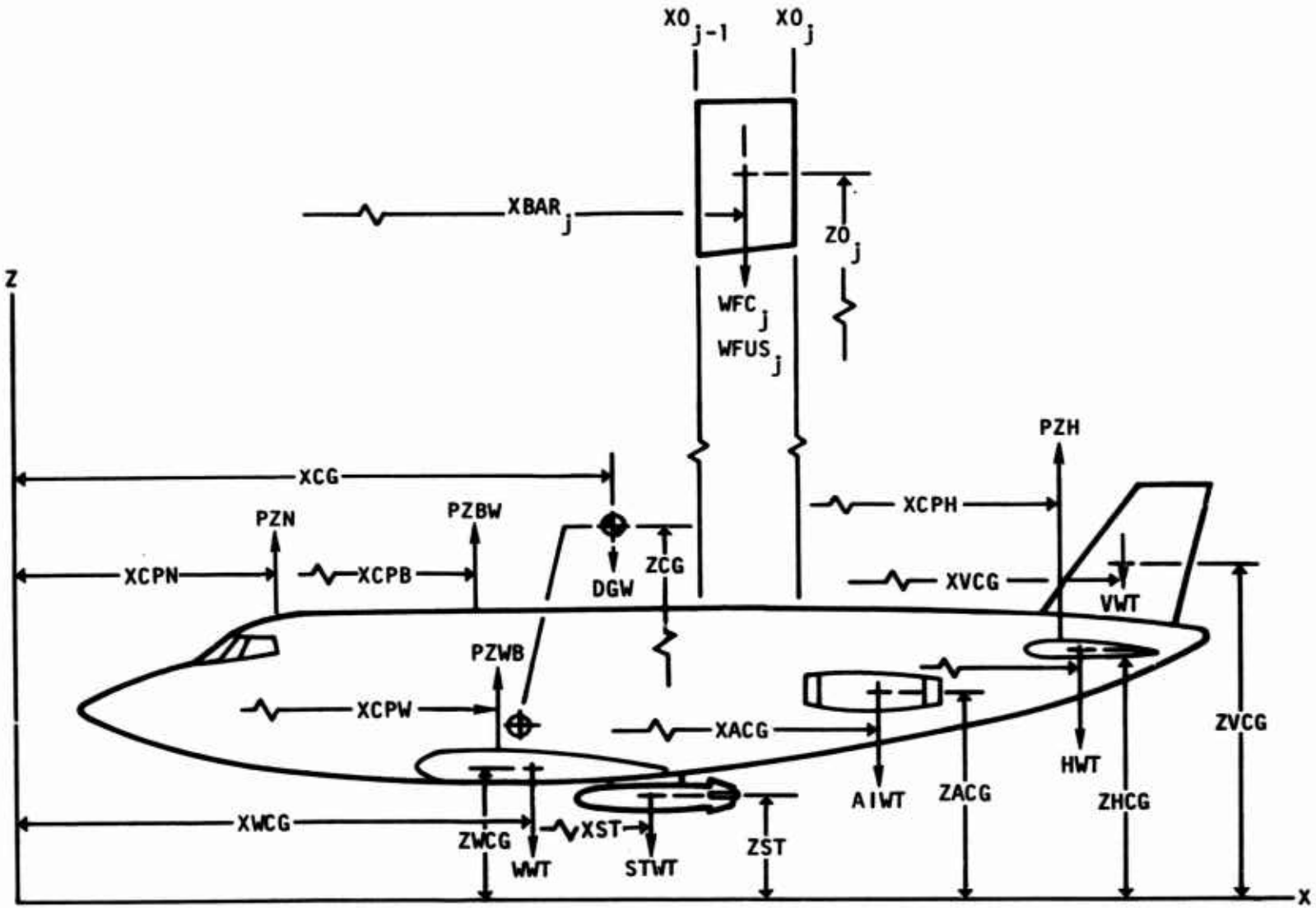

Figure 8. Vehicle force system.

TABLE 3. LIST OF SYMBOLS IN LOADS ROUTINES

FORTRAN Name	Engrg Symbol	Description
	a	Acceleration
AIOY		Pitch inertia of nacelle and contents about nacelle CG
AIWT		Nacelle and contents weight
CRV	C_R	Root chord of vertical tail
DELX		Fuselage segment length (array)
DGW		Vehicle gross weight
EY		Y-coordinate at interface with external component (array)
EZ		Z-coordinate at interface with external component (array)
FAC1		Limit load to ultimate load factor
FNZO	N_z	Limit design load factor
	F_z	Forces in the vertical direction
	g	Acceleration of gravity
HCT		Horizontal tail attach-type indicator: 0 = shear and moment tie; 2 = spindle mounted
HIOY		Pitch inertia of horizontal tail and contents about CG
HWT		Horizontal tail and content weight
	L	Lateral load at frame
	m	Vehicle mass
	M	Moment
	M_x	Lateral moment
	M_y	Pitch moment
	P	Fuselage distributed lift (array)
PYV		Vertical tail lateral airload
PZBW		Body lift in presence of wing
PZH		Horizontal tail lift
PZN		Nose lift
PZWB		Wing outer panel lift
QDOT		Vehicle pitching acceleration
	R	Vertical reaction
SIOY		Other component (store) pitch inertia about CG
SSPD		Vehicle sink speed at landing
STKE		Landing gear stroke
STWT		Other component (store) weight
TIYY		Vehicle pitch inertia
TOC	t/c	Vertical tail thickness ratio
TY		Transfer term between fuselage mold line and external component interface y-coordinate (array)
TZ		Transfer term between fuselage mold line and external component interface Z-coordinate (array)
UIY		Unit pitch inertia of fuselage and contents about segment centroid (array)

TABLE 3. LIST OF SYMBOLS IN LOADS ROUTINES (CONT)

FORTRAN Name	Engrg Symbol	Description
	V	Shear at fuselage cut
VCT		Vertical tail attach-type indicator: 0 = shear tie; 1 = shear and moment tie; 2 = spindle mounted
VIOY		Pitch inertia of vertical tail and contents about CG
VWT		Vertical tail and content weight
WCT		Wing attach-type indicator: 0 = shear tie; 1 = shear and moment tie
WFC		Weight of fuselage contents within segment (array)
WFUS		Weight of fuselage within segment (array)
WIOY		Pitch inertia of wing and contents about CG
WWT		Wing and content weight
XACG		X-coordinate of other component (store) CG
XAPX		X-coordinate of wing leading edge apex
	X_c	X centroid of support frames
XBAR		X centroid of fuselage segment (array)
XCG		X-coordinate of vehicle CG
XCPB		X-coordinate of body lift in presence of wing
XCPH		X-coordinate of horizontal tail lift
XCPN		X-coordinate of nose lift
XCPV		X-coordinate of vertical tail lateral airload
XCPW		X-coordinate of wing outer panel lift
XHCG		X-coordinate of horizontal tail and content CG
XHFS		X-coordinate of horizontal tail front spar support frame
XHRS		X-coordinate of horizontal tail rear spar support frame
XMGD		X-coordinate of main gear drag strut frame
XMGG		X-coordinate of main gear tires
XMGT		X-coordinate of main gear trunnion frame
XNFS		X-coordinate of nacelle forward support frame
XNGD		X-coordinate of nose gear drag strut frame
XNGG		X-coordinate of nose gear tires
XNGT		X-coordinate of nose gear trunnion frame
XNRS		X-coordinate of nacelle rear support frame
XO		X-coordinate of fuselage cut (array)
XOFS		X-coordinate of other component (store) forward support frame
XORS		X-coordinate of other component (store) aft support frame
XST		X-coordinate of other component (store) CG
XVCG		X-coordinate of vertical tail and content CG
XVFS		X-coordinate of vertical tail front spar support frame

TABLE 3. LIST OF SYMBOLS IN LOADS ROUTINES (CONCL)

FORTRAN Name	Engrg Symbol	Description
XVRS		X-coordinate of vertical tail rear spar support frame
XWCG		X-coordinate of wing and content CG
XWFS		X-coordinate of wing front spar support frame
XWIS		X-coordinate of wing intermediate spar support frame
XWRS		X-coordinate of wing rear spar support frame
YACG		Y-coordinate of nacelle and content CG
YCPH		Y-coordinate of horizontal tail panel CP
YCPW		Y-coordinate of wing panel CP
YHCG		Y-coordinate of horizontal tail and content CG
YHSF		Y-coordinate of horizontal tail-fuselage interface
YMGG		Y-coordinate of main gear tires
YMGS		Y-coordinate of main gear-fuselage interface
YNGS		Y-coordinate of nose gear-fuselage interface
YNSF		Y-coordinate of nacelle-fuselage interface
YOSF		Y-coordinate of other component-fuselage interface
YST		Y-coordinate of other component (store) CG
YVSF		Y-coordinate of vertical tail-fuselage interface
YWCG		Y-coordinate of wing and content CG
YWSF		Y-coordinate of wing-fuselage interface
ZACG		Z-coordinate of nacelle and content CG
ZCG		Z-coordinate of vehicle CG
ZCPV		Z-coordinate of vertical tail CP
ZGRD		Z-coordinate of ground line
ZHCG		Z-coordinate of horizontal tail and content CG
ZHSF		Z-coordinate of horizontal tail-fuselage interface
ZMGS		Z-coordinate of main gear-fuselage interface
ZNGS		Z-coordinate of nose gear-fuselage interface
ZNSF		Z-coordinate of nacelle-fuselage interface
ZO		Z-coordinate of fuselage centroid at cut (array)
ZOSF		Z-coordinate of other component-fuselage interface
ZST		Z-coordinate of other component (store) CG
ZVCG		Z-coordinate of vertical tail and content CG
ZVSF		Z-coordinate of vertical tail-fuselage interface
ZWCG		Z-coordinate of wing and content CG
ZWSF		Z-coordinate of wing-fuselage interface

Input Error Handling

Subroutine DUMMY1 serves the function of insuring compatibility of the input loads and inertia data. When this program is operated with user loads and inertia input, errors could exist which would result in incorrect net load calculations. To provide for this possibility, data sets are tested to insure that the sum of distributed masses is in agreement with the totals and that equations of equilibrium are not violated.

$$\sum F_z = 0 \text{ (vertical force equilibrium)}$$

$$\sum M_y = 0 \text{ (moment equilibrium)}$$

Tests on mass distribution assume that, if errors exist, the component details are correct.

$$DGW = \sum \text{component weight}$$

$$XCG = \frac{\sum (\text{component weight})\ (\text{component x-cg})}{\sum (\text{component weight})}$$

$$ZCG = \frac{\sum (\text{component weight})\ (\text{component z-cg})}{\sum (\text{component weight})}$$

$$TIYY = \sum (\text{component inertia about component centroid}) + \sum (\text{component weight})\ \left[(XCG - \text{component x-cg})^2 + (ZCG - \text{component z-cg})^2\right]$$

Tests on equations of equilibrium are made for three different types of load conditions:

1. Accelerated flight involving vertical acceleration

2. Accelerated flight involving both vertical and rotational acceleration.

3. Two-wheeled level landing

Tests on conditions involving only vertical acceleration assume that, if errors exist, the input wing lift and center of pressure are incorrect.

$$\sum F_Z = 0;\ PZWB = FNZO\ DGW - PZN - PZBW - PZH$$

$$\sum M_y = 0;\ XCPW = \frac{FNZO\ DGW\ XCG - PZN\ XCPN - PZBW\ XCPB - PZN\ XCPH}{PZWB}$$

Tests on conditions involving both vertical and rotational acceleration assume that any unbalance is attributed to input wing lift and pitching acceleration.

$$\sum F_Z = 0; \; PZWB = FNZO\ DGW - PZN - PZBW - PZH$$

$$\sum M_y = 0; \; QDOT = [PZN(XCG - XCPN) + PZBW(XCG - XCPB) + PZWB(XCG - XCPW) + PZH(XCG - XCPH)]\ 12g/TIYY$$

Vehicle trim in the landing configuration is checked prior to tire contact with the ground. The conditions of equilibrium at that instant are identical to steady-flight conditions. The sum of the lift forces are assumed to be equal to the weight of the vehicle acting through the vehicle center of gravity.

Ground Loads

All flight condition component loads are specified input which are verified in subroutine DUMMY1. Ground reaction loads for taxi and two-wheeled landing are calculated in subroutine FLDDT.

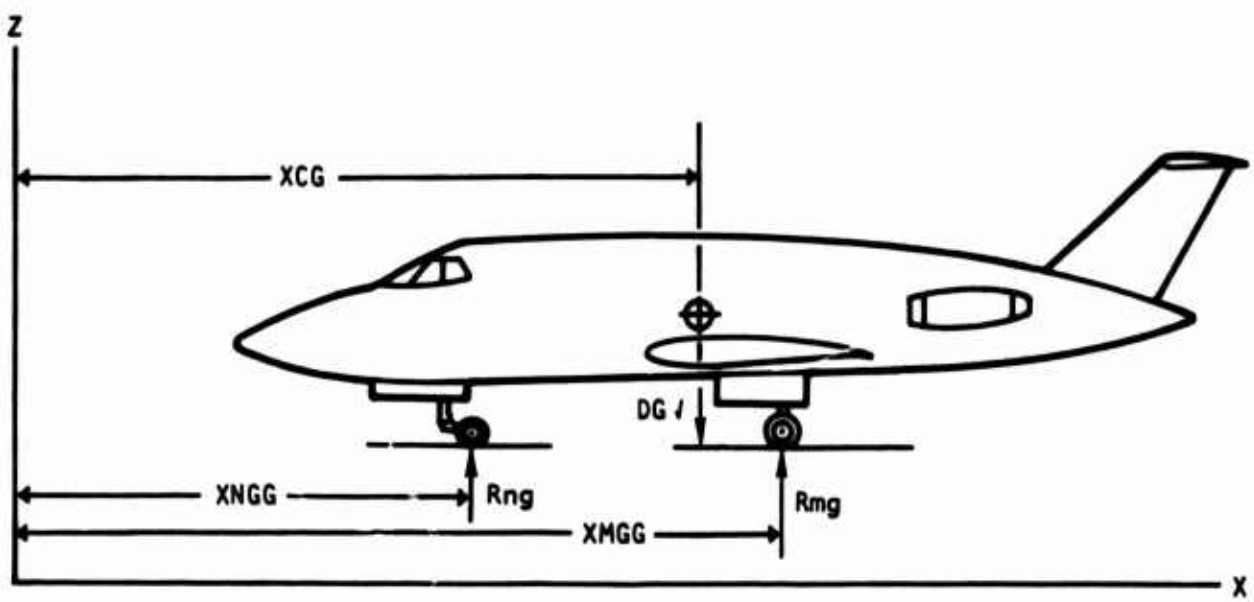

Reaction loads at the nose gear (Rng) and main gear (Rmg) for the taxi condition are calculated for static balance. Aerodynamic forces are assumed to be negligible. Equations of equilibrium are:

$$\sum F_Z = 0 = -FNZO\ DGW + Rng + Rmg$$

$$\sum M_y = 0 = -FNZO\ DGW\ XCG + Rng\ XNGG + Rmg\ XMGG$$

Solving for the reactions,

$$Rmg = \frac{FNZO\ DGW\ (XCG - XNGG)}{(XMGG - XNGG)}$$

$$Rng = FNZO\ DGW - Rmg$$

For the two-wheeled landing condition, vehicle kinetic energy due to sink speed is absorbed by the main landing gear shock strut. Aerodynamic lift is assumed to be equal to the vehicle weight.

$$\text{Kinetic energy} = 1/2\ mv^2 = 1/2\ \frac{DGW}{12g}\ SSPD^2$$

$$\text{Main gear reaction} = Rmg = ma = \frac{DGW}{12g}\ a$$

where

a = vehicle deceleration (inches per second squared)

$$\text{Potential energy} = Rmg\ STKE = \frac{DGW}{12g}\ a\ STKE$$

Equating kinetic energy to potential energy and solving for deceleration,

$$a = \frac{SSPD^2}{2\ STKE}$$

$$Rmg = \frac{DGW\ SSPD^2}{24\ g\ STKE}$$

The foregoing solutions are approximations which do not account for strut efficiency and tire deflections. Total vehicle load factor is the sum of deceleration and gravitational force.

$$FNZO = \frac{a}{12g} + 1$$

The main landing gear reaction vector does not pass through the vehicle center of gravity and, therefore, the vehicle is subjected to a rotational acceleration. This acceleration is determined from the equation of moment equilibrium.

$$\sum M_y = 0$$

$$\begin{aligned} QDOT = \big[& Rmg(XCG - XMGG) + PZN(XCG - XCPN) \\ & + PZWB(XCG - XCPW) + PZBW(XCG - XCPB) \\ & + PZH(XCG - XCPH) \big] \, 12g/TIYY \end{aligned}$$

Major Frame Coordinates

Coordinates of frame load reaction points are calculated in subroutine FRMEG from input fuselage and external component geometric definitions. External components are generally present in pairs; i.e., two wing panels, two horizontal tail panels, etc. This approach locates two reaction points on each frame that supports these components. Nose landing gears and vertical tails are generally located on the vehicle centerline. Although load vectors from these members are either normal to or pass through the Z-axis, suggesting a single support point, they are reacted by left and right side load points. The angle ϕ and its complement (360 degrees - ϕ) are calculated from the interface coordinates and the vertical centroid of the frame.

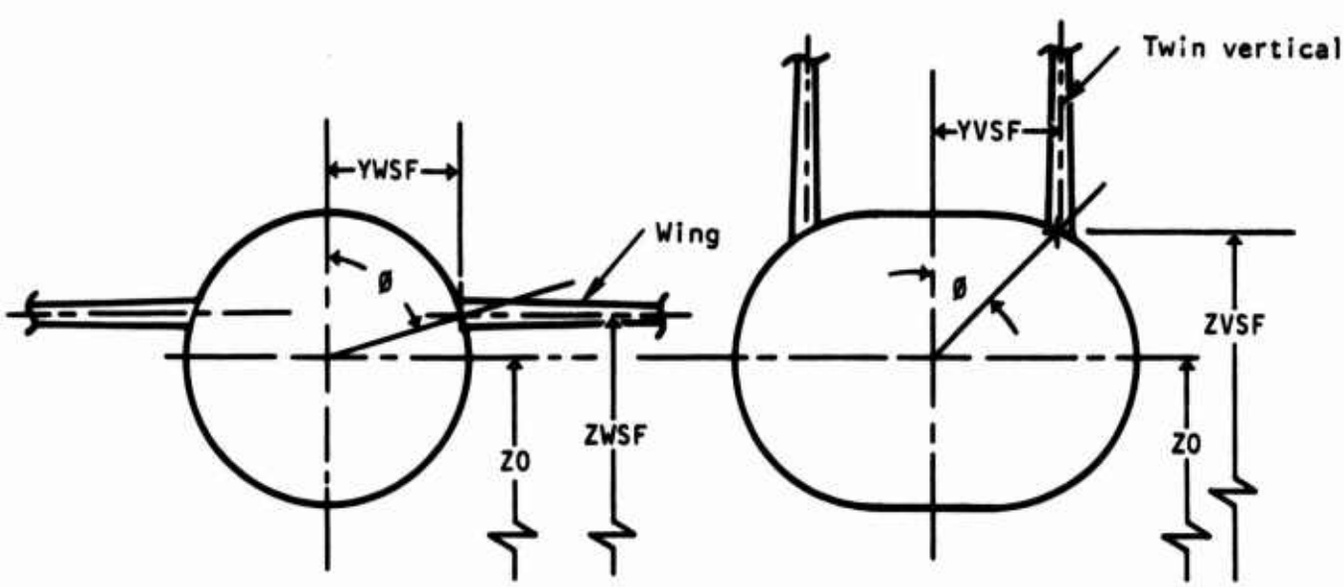

For single vertical tail configurations, YVSF is zero. The angular locations of the load points are approximated in the following manner:

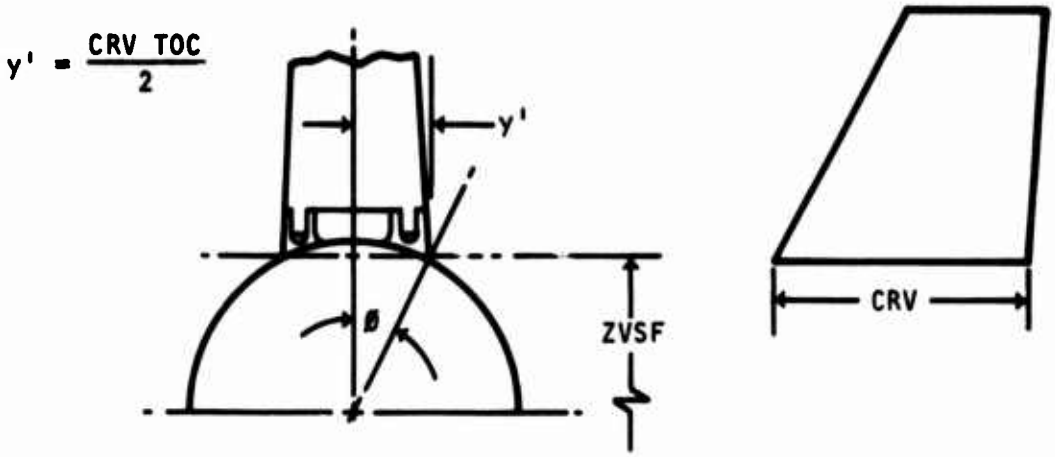

For nose landing gear, the lateral position of the load point, YNGT, is the trunnion bearing point.

The angular location ϕ can then be used to determine the actual fuselage coordinates. Due to structural idealization, inconsistency in geometry may be encountered. Situations which may cause this condition and the programmed approach are discussed in following paragraphs.

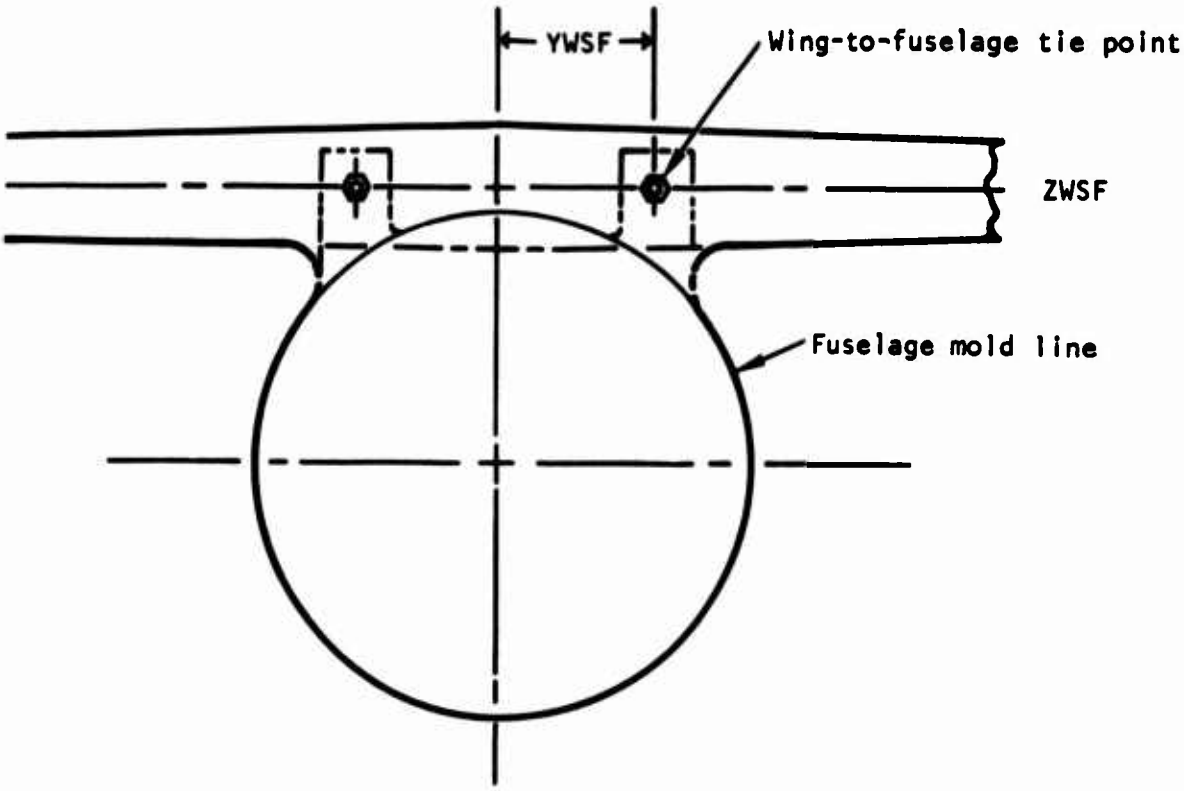

In the sample sketch, the wing shear forces are reacted outside of the idealized fuselage mold line. Fuselage ring analyses assume that these loads are introduced on the idealized mold line and, therefore, correction terms TY and TZ are calculated for use in determining loads at the assumed reaction point coordinates (EY, EZ).

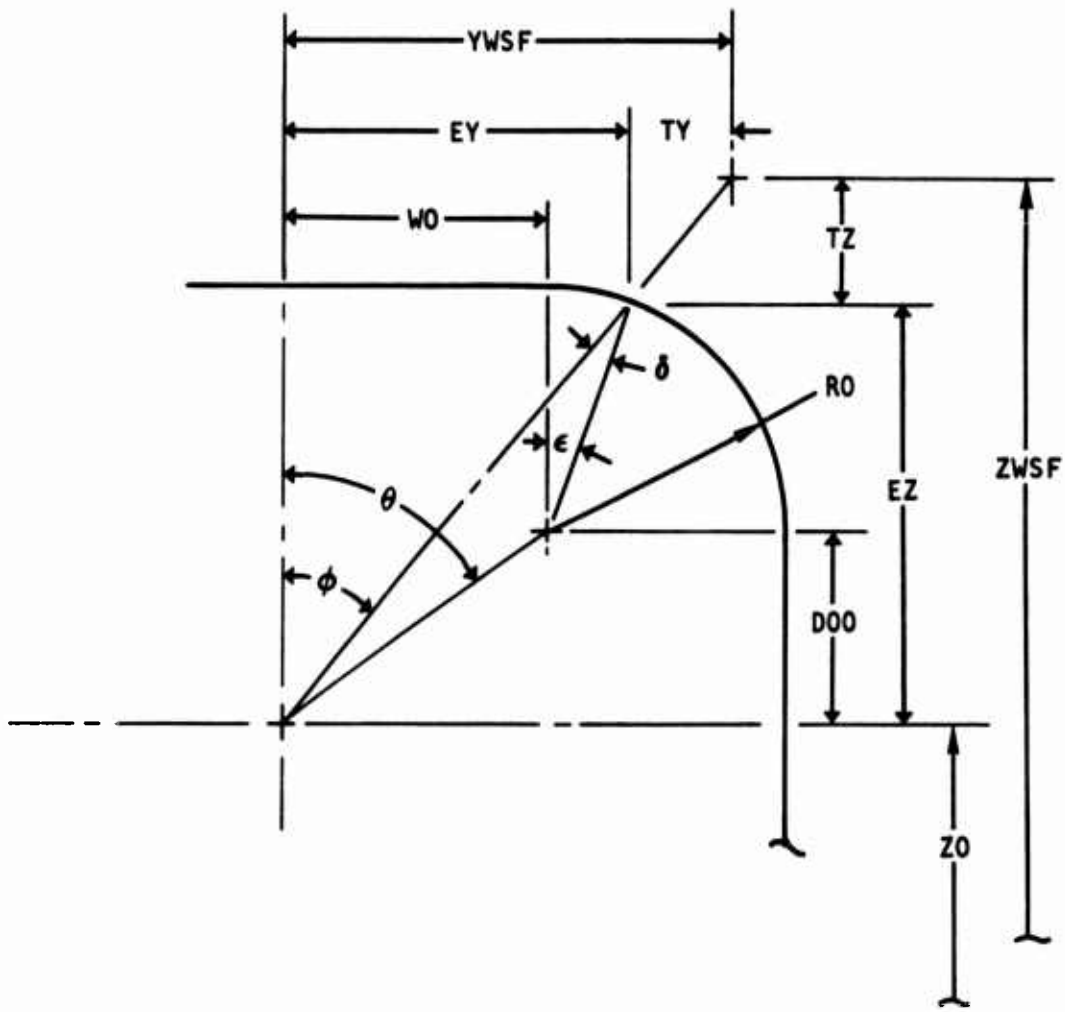

For the general case, a rounded rectangle, correction terms TY and TZ are determined as follows:

$$EY = WO + RO \sin\varepsilon$$

where

$$\varepsilon = \phi - \delta$$

$$\delta = \sin^{-1}\left[\frac{\sqrt{WO^2 + DOO^2}\ \sin(\theta - \phi)}{RO}\right]$$

$$TY = YWSF - EY$$

$$EZ = DOO + RO \cos\varepsilon$$

$$TZ = ZWSF - EZ - ZO$$

Major Frame External Loads

Major frame loads are calculated in subroutine FLDDT. These loads are introduced at the interface of the fuselage with the major components. Different frames which may exist on a given configuration are:

1. XNGT - Nose landing gear trunnion frame
2. XNGD - Nose landing gear drag strut frame
3. XMGT - Main landing gear trunnion frame
4. XMGD - Main landing gear drag strut frame
5. XWFS - Wing front spar frame
6. XWIS - Wing intermediate spar frame
7. XWRS - Wing rear spar frame
8. XHFS - Horizontal tail front spar frame

9. XHRS - Horizontal tail rear spar frame

10. XVFS - Vertical tail front spar frame

11. XVRS - Vertical tail rear spar frame

12. XNFS - Nacelle front spar frame

13. XNRS - Nacelle rear spar frame

14. XOFS - Other component forward support frame

15. XORS - Other component aft support frame

Loads at the different frames are calculated for each of the design conditions. These calculations are based on specific function and type of structural interface.

Nose gear loads (Rng) for the taxi condition are normally reacted at the trunnion (XNGT) and drag strut (XNGD) frames. Only the vertical components of the reactions at the trunnion and drag strut support points require calculation. Horizontal forces are not calculated since this program does not evaluate fore and aft frame loads.

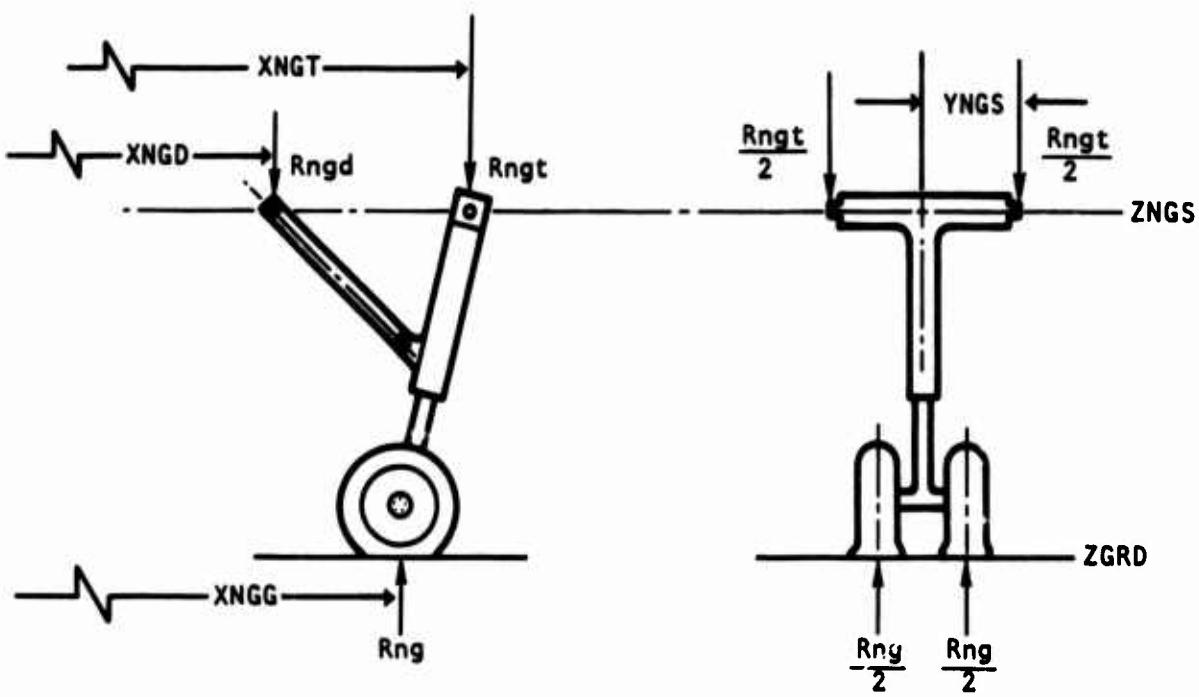

$$Rngt = Rng \frac{(XNGG - XNGD)}{(XNGT - XNGD)}$$

$$Rngd = Rng - Rngt$$

Half of the vertical loads are reacted at the two points on the respective frames and are located as shown:

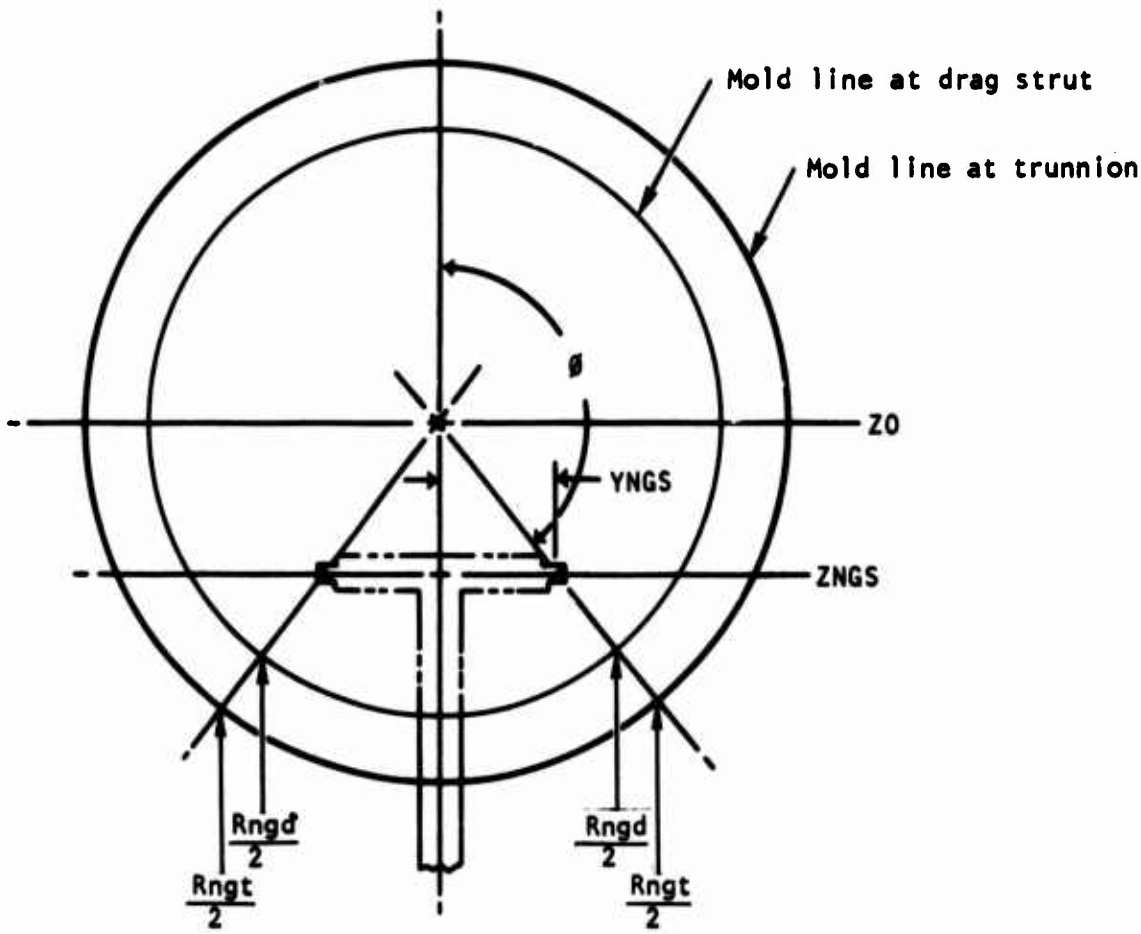

On certain configurations, a separate drag strut frame does not exist.

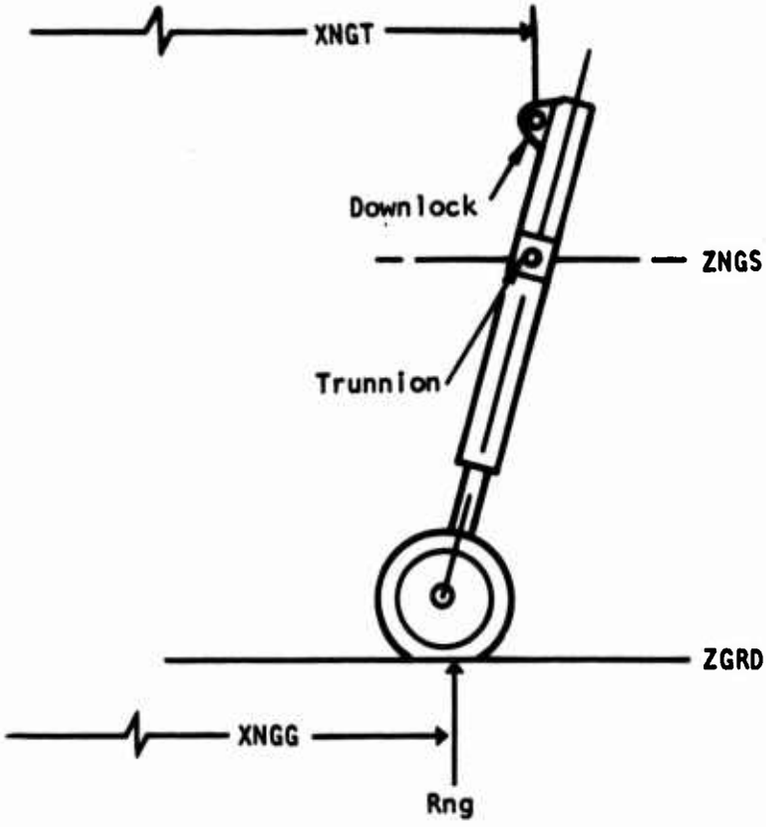

All of the vertical load is reacted at the trunnion. Longitudinal moment (My) unbalance is reacted as a couple force between the downlock and trunnion points. This unbalanced moment is used in the calculation of net fuselage bending moment.

$$Rngt = Rng$$

$$My = Rng\ (XNGG - XNGT)$$

Main landing gear tire loads are determined for the taxi and two-wheeled landing condition. If the gear is mounted on the wing, these loads are used in the wing reaction calculations. Vertical reactions at the trunnion (Rmgt) and drag strut (Rmgd) are calculated in the same manner as used for the nose gear.

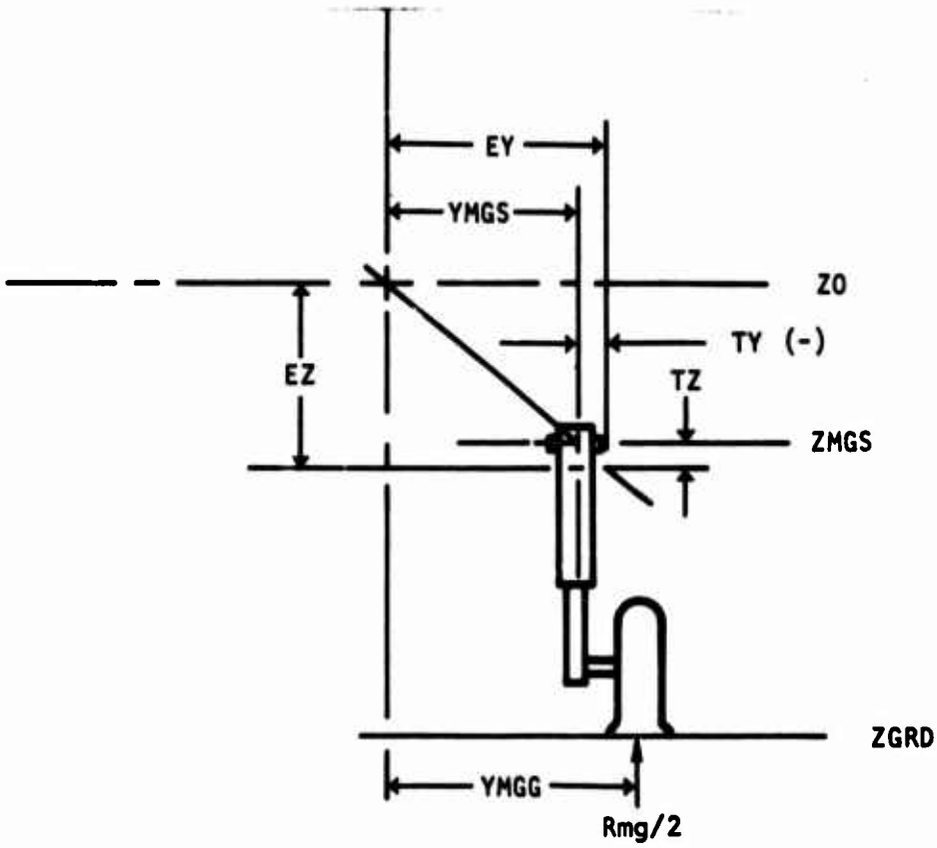

The cross-ship moment is reacted at the trunnion and, therefore, the couple due to eccentricity is calculated. This moment (Mmg) is:

$$Mmg = Rmg/2\ (YMGG - YMGS + TY)$$

Should no drag strut frame exist, all of the vertical load is reacted at the trunnion, and the calculations are made in the same manner as discussed for nose gear loads.

Vertical loads on the wing are due to aerodynamic forces (lift), inertia forces, and on some configurations, landing gear loads. Wing structure can be continuous with a center section connecting the two panels or could stop at the side of the fuselage.

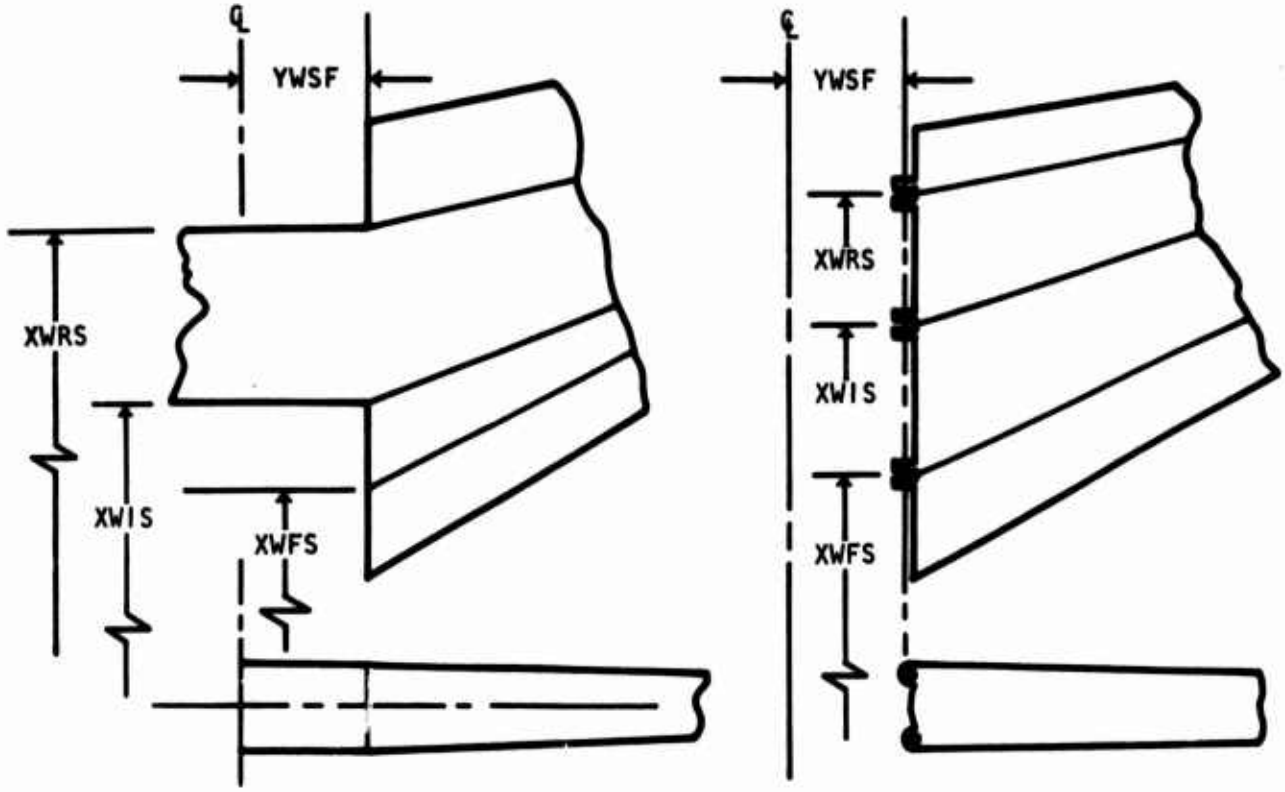

For wings with center sections, only vertical loads are reacted at the frames. Both vertical loads and cross-ship moments are reacted by fuselage frames supporting wings without any center section. Either two or three fuselage frames may be used to react these loads. The load derivations that follow are for a three-frame system. Two-frame solutions are identical except for the deletion of intermediate spar (XWIS) terms.

For the force system shown in Figure 9, the vertical frame reactions are assumed to be that which would be obtained with an infinitely rigid root rib. The centroid of the reaction points (X_c) is:

$$X_c = (XWFS + XWIS + XWRS)/\text{number of frames}$$

$$\Sigma F_Z = \frac{PZWB}{2} + \frac{Rmg}{2} + \frac{WWT}{2}\left[-FNZO + \frac{QDOT}{12g}(XWCG - XCG)\right]$$

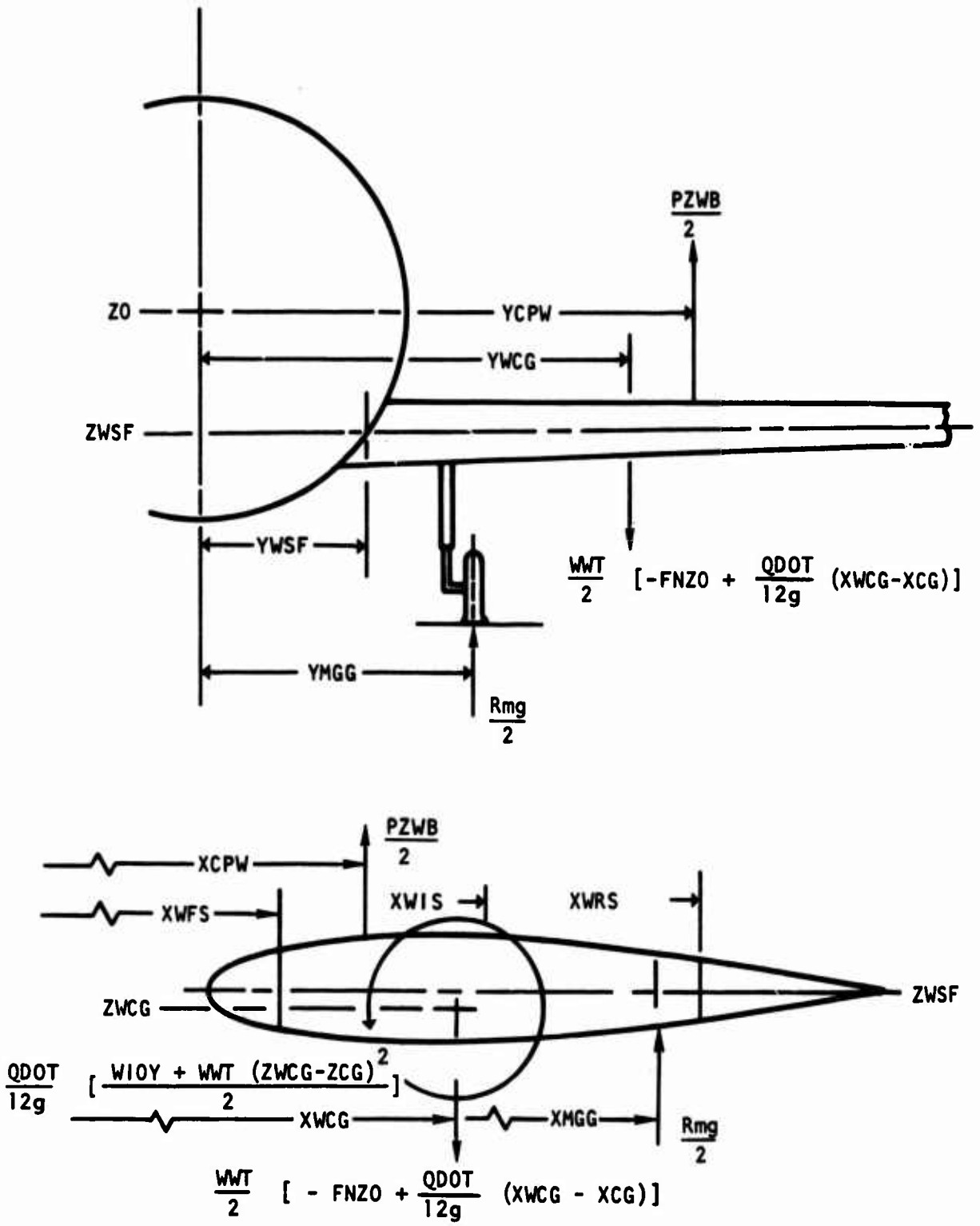

Figure 9. Wing force system.

The moment of the forces about X_c is:

$$\sum M_y = \frac{PZWB}{2}(X_c - XCPW) + \frac{Rmg}{2}[X_c - XMGG]$$

$$+ \frac{WWT}{2}\left[- FNZO + \frac{QDOT}{12g}(XWCG - XCG)\right](X_c - XWCG)$$

$$- \left(\frac{QDOT}{12g}\right)\left[\frac{WIOY + WWT\ (ZWCG - ZCG)^2}{2}\right]$$

The sum of the distances from the centroid of the reaction system squared is:

$$\sum X^2 = (X_c - XWFS)^2 + (X_c - XWIS)^2 + (X_c - XWRS)^2$$

The vertical reaction at the front spar is then:

$$R_{fs} = \frac{\sum F_Z}{\text{number of frames}} + \frac{\sum My\ (X_c - XWFS)}{\sum X^2}$$

Vertical reactions at the other frames are calculated by substituting XWIS and XWRS in the equation. This method is similar to the solution for rivet loads when the rivets are in a single row pattern.

For wings with no center section, the cross-ship moments (M_x) at each of the frames are estimated. Only the airload lift term contributions are shown. Inertia and landing gear contributions are determined in the same manner and added to the airload effect.

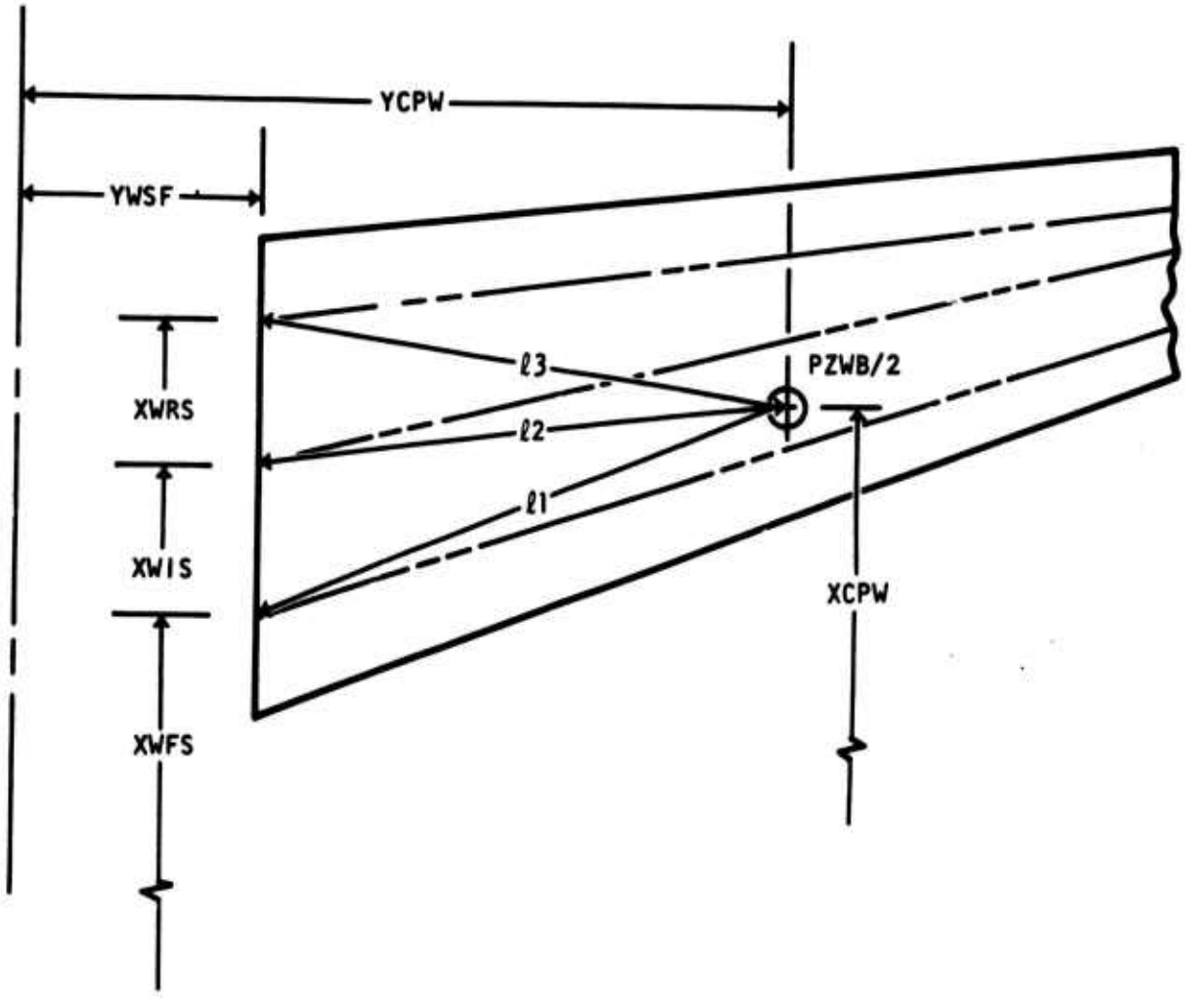
YCPW
YWSF
XWRS
XWIS
XWFS
ℓ3
ℓ2
ℓ1
PZWB/2
XCPW

The cross-ship moment at the side of fuselage is:

$$M_x = \frac{PZWB}{2} (YWCP - YWSF)$$

The basic assumptions are that the cross-ship moment follows the three load paths, ℓ_1, ℓ_2, and ℓ_3, as shown in the preceding sketch, and that the rotation (θ) of the center-of-pressure point is constant. The rotation is defined by the equation:

$$\theta = \int \frac{M d\ell}{EI}$$

If it is further assumed that the flexibility (EI) is constant for the three paths,

$$\theta \sim M_1 \ell_1 = M_2 \ell_2 = M_3 \ell_3$$

where

$$M_x = M_1 + M_2 + M_3$$

Solving for the cross-ship moment (M_1) at the front spar,

$$M_1 = M_x - M_2 - M_3$$

$$= M_x - M_1 \frac{\ell_1}{\ell_2} - M_1 \frac{\ell_1}{\ell_3}$$

$$M_1 = \frac{M_x \, 1/\ell_1}{1/\ell_1 + 1/\ell_2 + 1/\ell_3}$$

Similarly, the moments at the other reaction points are calculated. An inconsistency may exist due to geometry coordinates as discussed previously, where the calculated frame loads are not on the theoretical moldline.

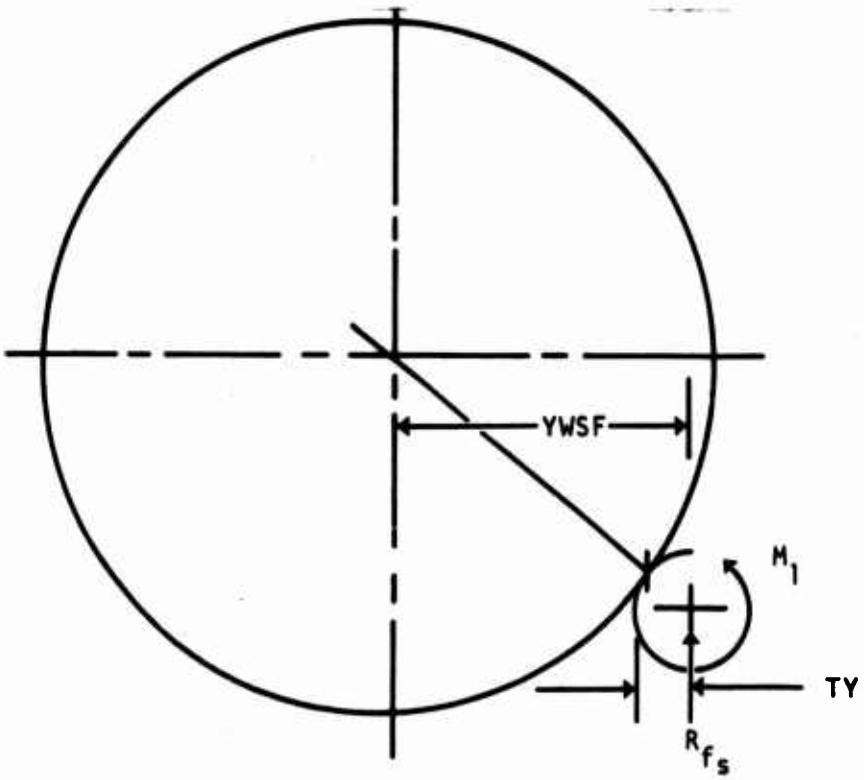

The corrected moment (M_{fs}) is :

$$M_{fs} = M_1 + R_{fs}\ TY$$

Loads from horizontal tail surfaces are due to aerodynamic forces and inertia forces. The tail may be supported on the fuselage or on the vertical tail. In the case where the horizontal is supported by the fuselage, two frames react the loads. Tail structure may be either center-section type, no center section, or spindle-mounted design. Frame load calculations for the first two types are identical to that used for wings with two support frames. On spindle-mounted horizontal tails, all of the cross-ship moment is reacted at the rear spar frame.

A single vertical tail, t-tail, or twin verticals may exist on a configuration. The following sketch depicts the forces on a t-tail arrangement.

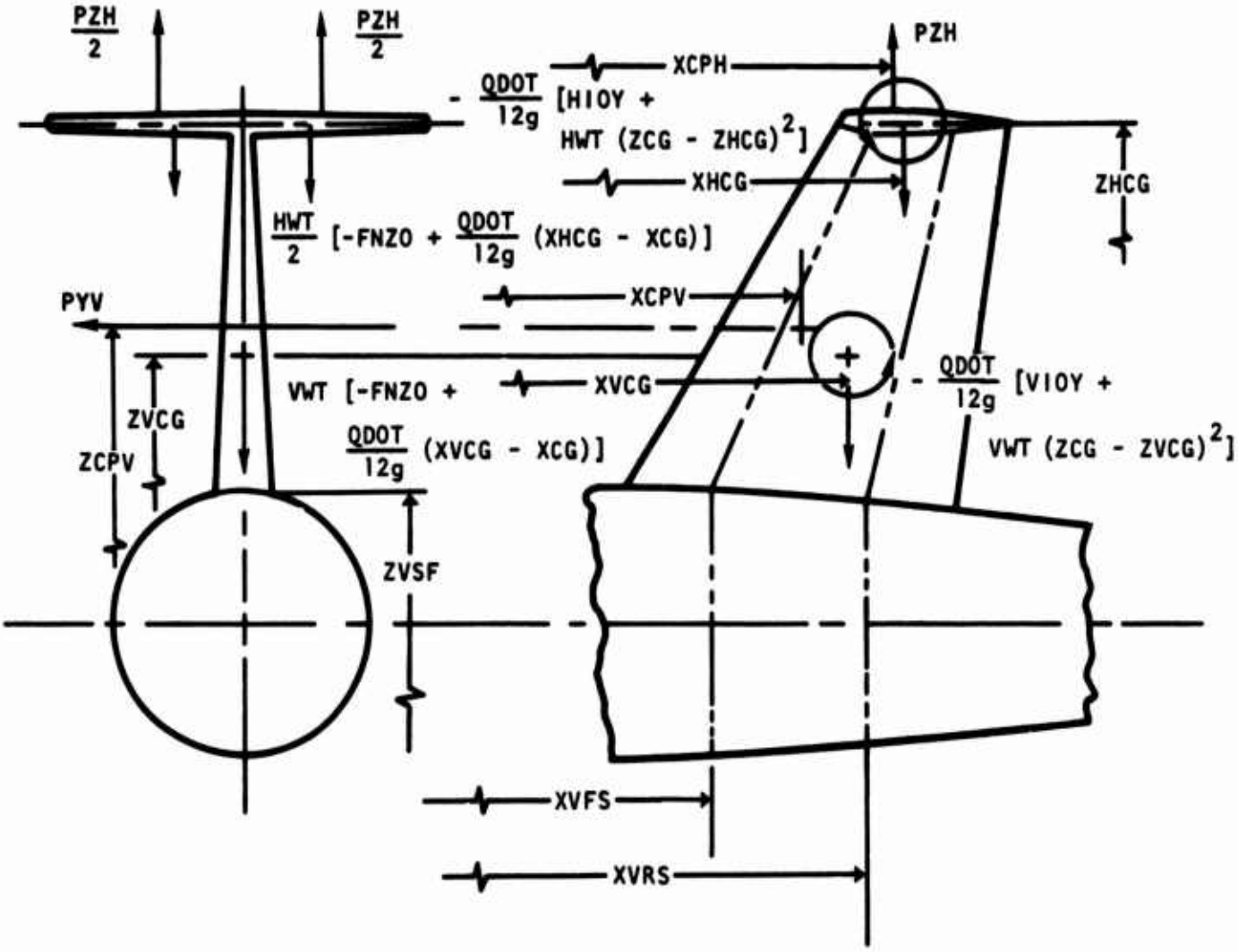

The centroid of the reaction points (X_c) is:

$$X_c = (XVFS + XVRS)/2$$

The total of the vertical forces and the moment about X_c are:

$$\sum F_Z = PZH + HWT\left[-FNZO + \frac{QDOT}{12g}(XHCG - XCG)\right]$$

$$+ VWT\left[-FNZO + \frac{QDOT}{12g}(XVCG - XCG)\right]$$

$$\sum M_y = PZH(X_c - XCPH) + HWT\left[-FNZO + \frac{QDOT}{12g}(XHCG - XCG)\right](X_c - XHCG)$$

$$- \frac{QDOT}{12g}\left[HIOY + HWT\ (ZHCG - ZCG)^2\right]$$

$$+ VWT\ \left[-FNZO + \frac{QDOT}{12g}\ (XVCG - XCG)\right](X_c - XVCG)$$

$$- \frac{QDOT}{12g}\left[VIOY + VWT(ZVCG - \dot{Z}CG)^2\right]$$

If $\sum X^2 = (X_c - XVFS)^2 + (X_c - XVRS)^2$

The vertical reaction at the front spar is:

$$R_{fs} = \frac{\sum FZ}{2} + \frac{\sum M_y\ (X_c - XVFS)}{\sum X^2}$$

The reaction at the rear spar is obtained by substituting XVRS for XVFS in the foregoing equation.

The lateral load (PYV) on the vertical tail is also reacted at the frames. No moment is introduced by the horizontal tail due to the assumption of load symmetry. The lateral force and moment are:

$$L_{fs} = PYV\frac{(XCPV - XVRS)}{(XVRS - XVFS)}$$

$$L_{rs} = PYV - L_{fs}$$

$$M_x = PYV(ZCPV - ZVSF)$$

This moment is distributed between the front and rear spar frames by the same method as for loads normal to the wing surface.

These loads are distributed between the two frame interface points. Front spar details are shown in the following example:

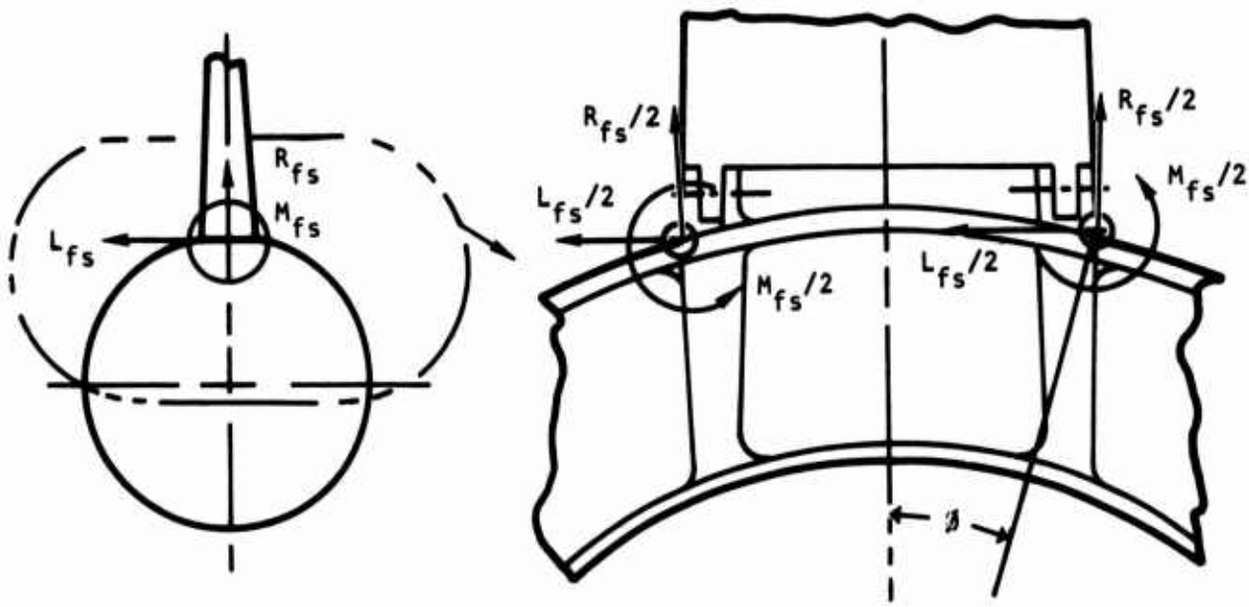

On spindle-mounted vertical tails, all of the rolling moment is introduced at the rear spar frame.

Load calculations for a single vertical are identical to that for a t-tail arrangement if the horizontal tail contribution terms are deleted. Calculations for twin vertical arrangements are also similar except for the accounting of external forces and the assumption that loads from each vertical tail are introduced at the lateral centroids.

Loads introduced by nacelles and other items mounted outside of the mold line are calculated for two support frames reacting both vertical load and cross-ship moments. These loads are calculated in the same manner as for a two-spar wing without any center section. Only inertia terms are pertinent in these calculations. The SWEEP program in its current form is set up for fuselage-mounted nacelles. It is capable of accepting other user-designated external stores only when the Fuselage module is operated in the stand-alone mode.

Body Airloads

Subroutine FARLD distributes body airload on the appropriate fuselage segments. Forebody lift (PZN) is located at a center of pressure (XCPN). This lift is assumed to be distributed according to an isoceles triangle shape as shown in the following sketch. The apex of the triangle is placed at the center of pressure.

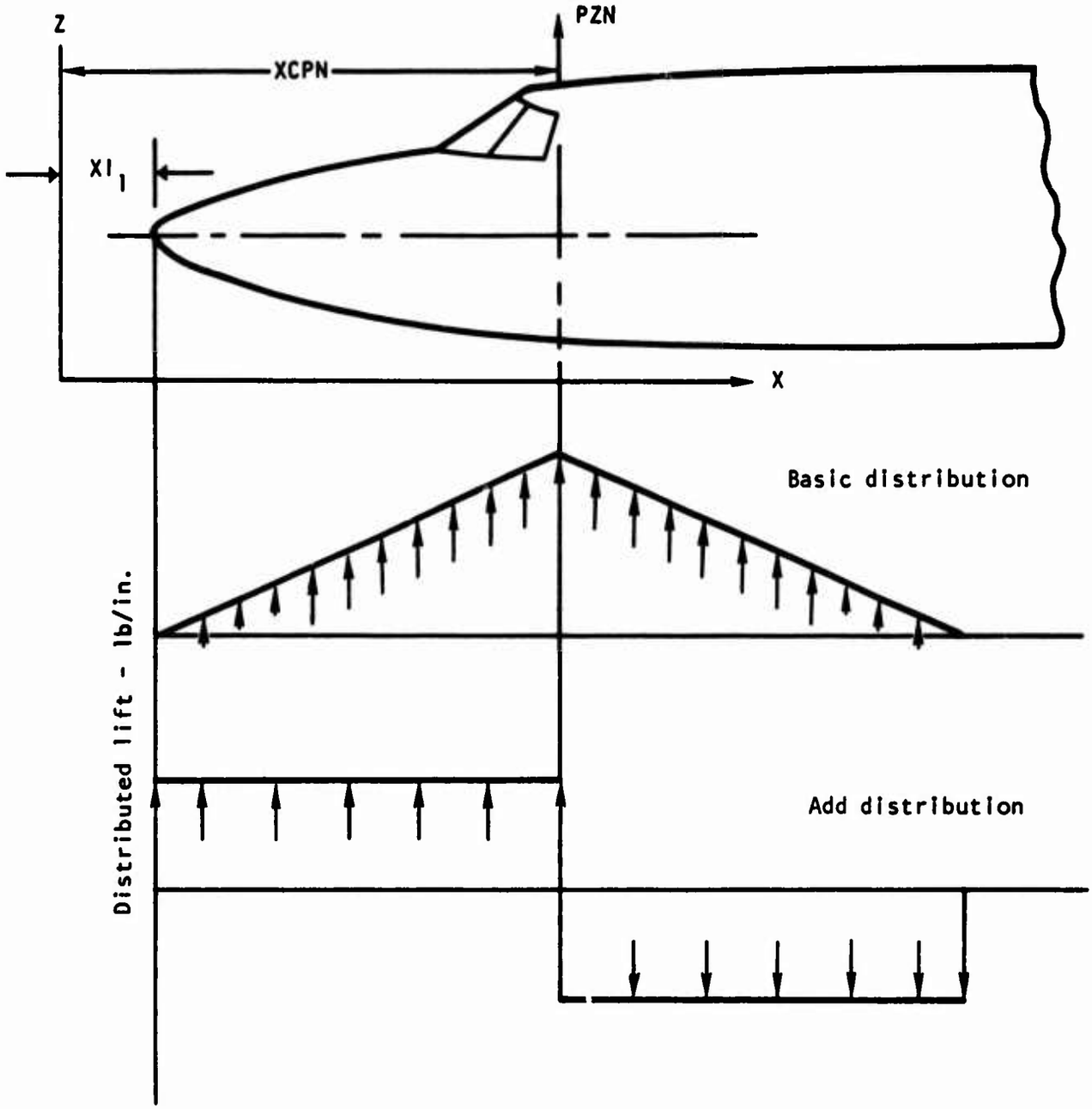
Z
PZN
XCPN
XI1
X
Basic distribution
Distributed lift - lb/in.
Add distribution

The basic distribution is used to calculate the amount of lift acting on each of the affected fuselage segments. However, the lift within a segment is assumed to act at the centroid of the segment and, therefore, an error in center of pressure is introduced. Depending upon the manner in which synthesis cuts are input, this can result in an unbalanced airload moment about the longitudinal center of pressure.

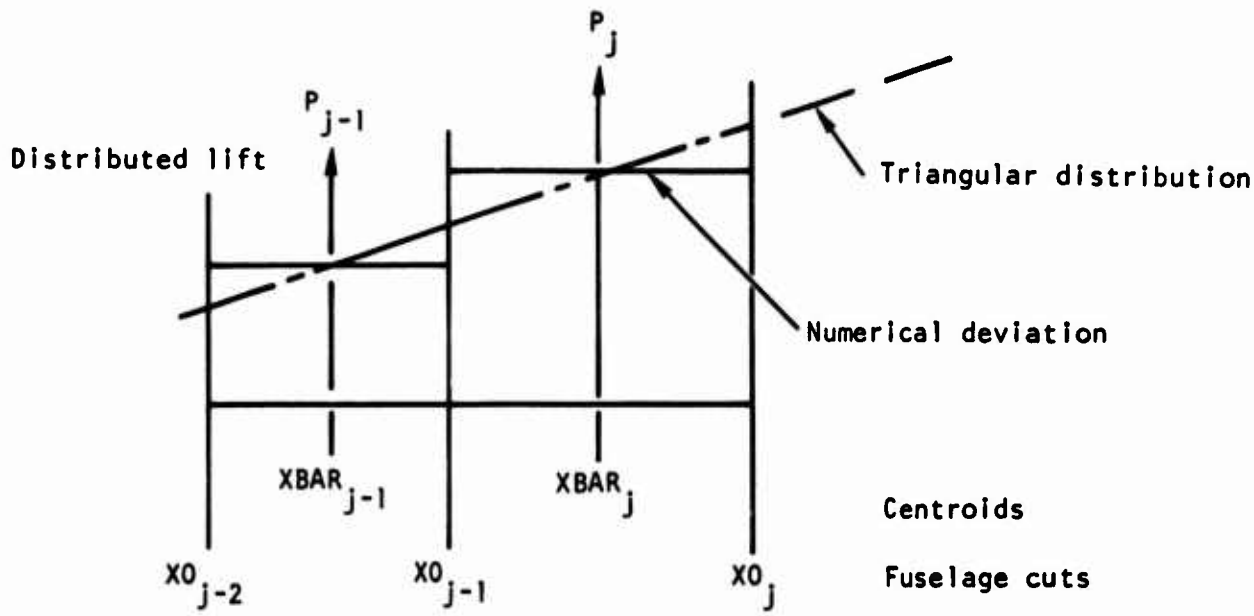

An adjustment is made such that the assumed distribution matches both the total lift and the overall center of pressure. This is done by using the add distribution. The airload then acting upon any one fuselage segment becomes the sum of that determined from the triangular distribution plus the added distribution. The direction of the add distribution vector is dependent upon whether a pitchup or a pitchdown moment correction is required for balance.

Body lift in the presence of the wing (PZBW) is distributed in the same manner as the forebody lift. The forward edge of the lift distribution is located at the intersection of the wing leading edge with the centerline of the body (XAPX). On variable sweep configurations, the apex (XAPX) varies with wing sweep position.

The airload is assumed to act at the centroid (defined in subroutine GEOMF1) of each synthesis segment. No attempt is made to maintain exact CP locations from trapezoidal airload distributions within individual segments; this segment CP error does not have a significant impact upon loads at synthesis cuts in the region of the vehicle nose.

Net Shell Loads

Subroutine FLDNT calculates the net vertical shear and longitudinal bending moment at each synthesis cut by integrating the effects of:

1. WFUS - Distributed fuselage weights
2. WFC - Distributed fuselage content weights
3. P - Distributed body airloads
4. R - External forces introduced at the support frames

The following sketch depicts forces acting within a shell segment bounded by cuts j-1 and j.

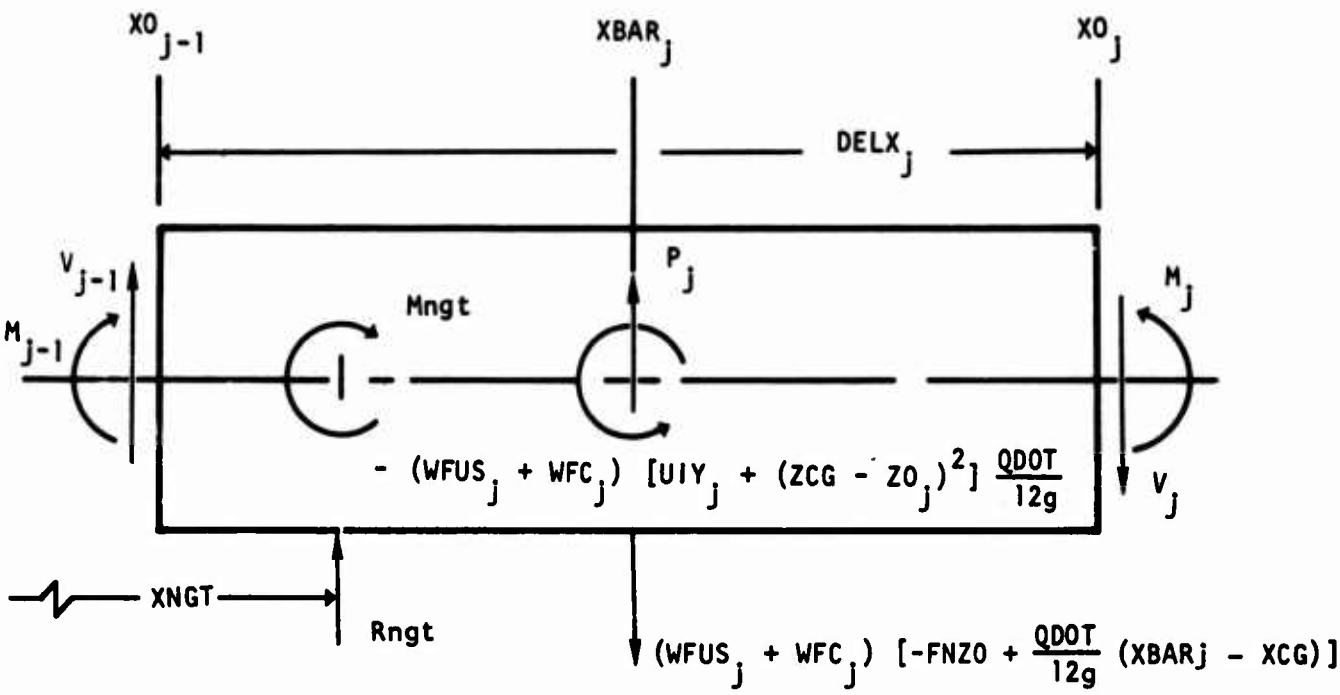

In the example, nose gear trunnion reactions are shown:

Mngt = couple introduced from nose gear loads (no drag strut frame)

Rngt = vertical load introduced at nose gear trunnion frame

Numerical summations are initialized at the first cut and proceed through subsequent cuts. Shear and bending moment at cut j are obtained by adding the effect of loads within the segment to the loads at the previous cut.

$$V_j = V_{j-1} + Rngt + P_j + (WFUS_j + WFC_j)\left[-FNZO + \frac{QDOT}{12g}(XBAR_j - XCG)\right]$$

$$M_j = M_{j-1} + V_{j-1}\,DELX_j + Mngt + Rngt\,(XO_j - XNGT)$$

$$+ \left\{P_j + (WFUS_j + WFC_j)\left[-FNZO + \frac{QDOT}{12g}(XBAR_j - XCG)\right]\right\}(XO_j - XBAR_j)$$

Incremental vertical force due to contents is also calculated. This force is indicative of the contents as well as the local vertical load factor at the segment centroid and is used to determine critical fuel pressure criteria in subroutine LDCHK.

$$\delta V_j = WFC_j - \left[FNZO + \frac{QDOT}{12g}(XBAR_j - XCG)\right]$$

Critical Shell Design Loads

A maximum of 23 load conditions are investigated for critical design loads. In order to minimize program execution time, subroutine LDCHK selects the critical loads prior to shell synthesis. Each time this routine is called the design loads at one synthesis cut are evaluated.

Structural temperatures and corresponding material properties vary with loading condition. The procedure for selecting design loads is as follows:

1. At a given synthesis cut, the ratio (M/F_{cy}) of bending moment to longeron or stringer compressive yield strength, and the ratio (V/F_{su}) of vertical shear load to ultimate shearing strength, are calculated for each loading condition.

2. For all loading conditions with positive bending at the specified synthesis cut, M/F_{cy} values are compared, and the bending moment attendent with the largest value of this parameter is selected as the design value of positive bending moment at that station.

3. Similarly, all loading conditions with negative bending at the specified synthesis cut are evaluated for the maximum negative value of M/F_{cy}, and a design value for negative bending moment is established.

4. Design values of shearing load are similarly established by selecting the loading condition that produces the greatest absolute value of V/F_{su}, and storing the appropriated value of V for that condition.

5. The critical positive bending moment, negative bending moment, and shear load thus determined are stored along with the appropriate material properties for use in sizing routines.

6. Conditions which produce maximum positive and negative loading from fuselage contents are determined. The vertical and pitching accelerations from these conditions are stored for use in determining the internal design pressures for fuselage sections containing fuel.

7. The first time LDCHK is called, vertical reactions from lifting surface components, fuselage-mounted nacelles, and fuselage-mounted stores are checked for each loading condition. Maximum reaction load from each of these components are determined and stored for later use in estimating attachment fitting weights. This operation is not repeated on subsequent calls of subroutine LDCHK.

MATERIAL PROPERTIES

Structural synthesis procedures are dependent on the modeling of physical and mechanical properties of the materials selected for structural design. Material descriptions must be in a form that can be used to reflect their behavior under load so that structures can be synthesized to satisfy conditions of strength, stiffness, and stability.

Subroutines MFCNTL, MATLF, and MATLP1 provide these data by processing properties stored in a material data file. This file consists of 20 records which describe physical and mechanical properties of different aluminum, titanium, and steel alloys. Each record consists of the following data:

1. Material identification number and descriptive title

2. Density

3. Modulus of elasticity at room temperature (80° F)

4. Shear modulus of rigidity at room temperature

5. Fatigue characteristic (reduction of area)

6. Stress-strain and strength data at different operating temperatures (a maximum of five sets of data)

Properties at temperatures other than those described in the data sets are determined by an interpolation or extrapolation procedure. Most of these properties are discrete allowables and characteristics.

Inelastic instability solutions require information given by the compressive stress-strain diagram. Stress-strain diagrams of isotropic materials consist of straight-line portions reflecting elastic behavior and curved portions reflecting plastic deformations. Material file data consist of the definition of key points on the stress-strain plot. Proportional limit defines that point on the curve at which the stress-strain diagram departs from the straight line that defines the modulus of elasticity. Figure 10 shows a typical diagram depicting the proportional limit and the yield stress defined by the 0.002 strain offset method. The true yield stress would be used for materials which have a definite yield point. Three other points at equal strain increments define the curved portion of the diagram.

A mathematical representation is used to provide a continuous description of the elastic and plastic properties through the yield stress-point and values for strain, tangent modulus, and secant modulus (Figure 11). The general form of the equation used to approximate the stress-strain curve is:

$$\epsilon = \frac{\sigma}{E} + Ae^{B\sigma}$$

where

ϵ = strain, in./in

σ = stress, psi

E = modulus of elasticity, psi

A = constant, function of material, in./in.

B = constant, function of material, 1/psi

e = base of the natural logarithm

The first term of the equation approximates the linear region of the curve where:

$$E = \frac{\sigma_{pl}}{\epsilon_{pl}} = \frac{\sigma_1}{\epsilon_1}$$

The second term fits the plastic region of the stress strain curve. If the curve passes through points 2 and 5, the constant B can be determined by substitution of the stress-strain data.

$$B = \frac{\log_e \left(\dfrac{\epsilon_5 - \dfrac{\sigma_5}{E}}{\epsilon_2 - \dfrac{\sigma_2}{E}} \right)}{\left(\sigma_5 - \sigma_2 \right)}$$

and

$$A = \frac{\epsilon_2 - \dfrac{\sigma_2}{E}}{e^{B\sigma_2}} = e^{\left[\log_e \left(\epsilon_2 - \frac{\sigma_2}{E} \right) - B\sigma_2 \right]}$$

Similarly, the constants A and B can be derived for curves passing through points 3 and 5 and points 4 and 5. All of the data points are evaluated for the least squares selection. The slope of the curve provides the values of the tangent modulus of the material, the key parameter in stability equations. Tangent modulus is obtained by differentiating the equation.

$$E_T = \frac{d\sigma}{d\epsilon} = \frac{1}{\dfrac{d\epsilon}{d\sigma}} = \frac{1}{\dfrac{1}{E} + ABe^{B\sigma}}$$

By definition, tangent modulus is equal to the modulus of elasticity at the proportional limit and, therefore, deviation at this point is also evaluated in the least square fit.

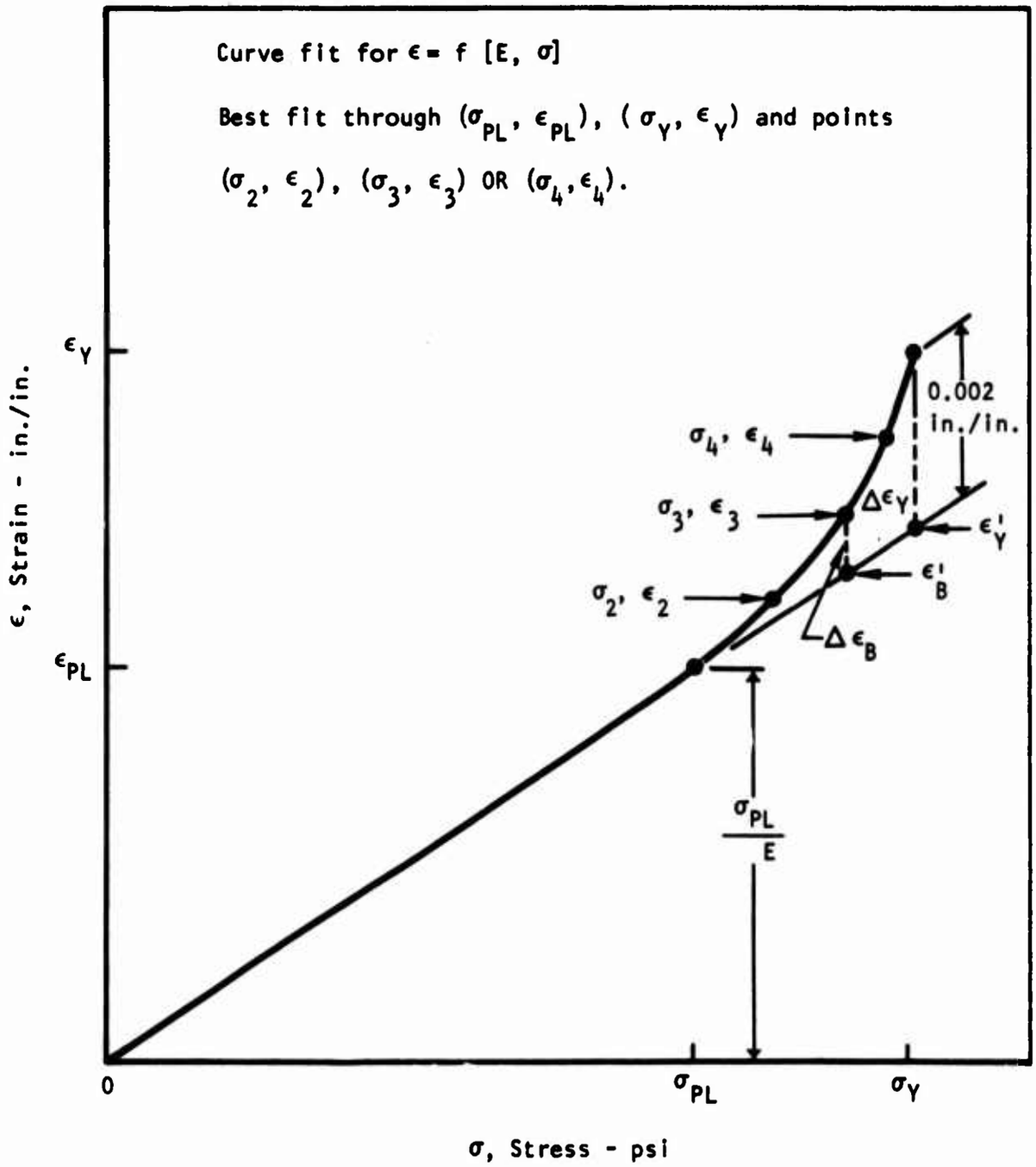

Figure 10. Stress-strain curve and curve fit control points.

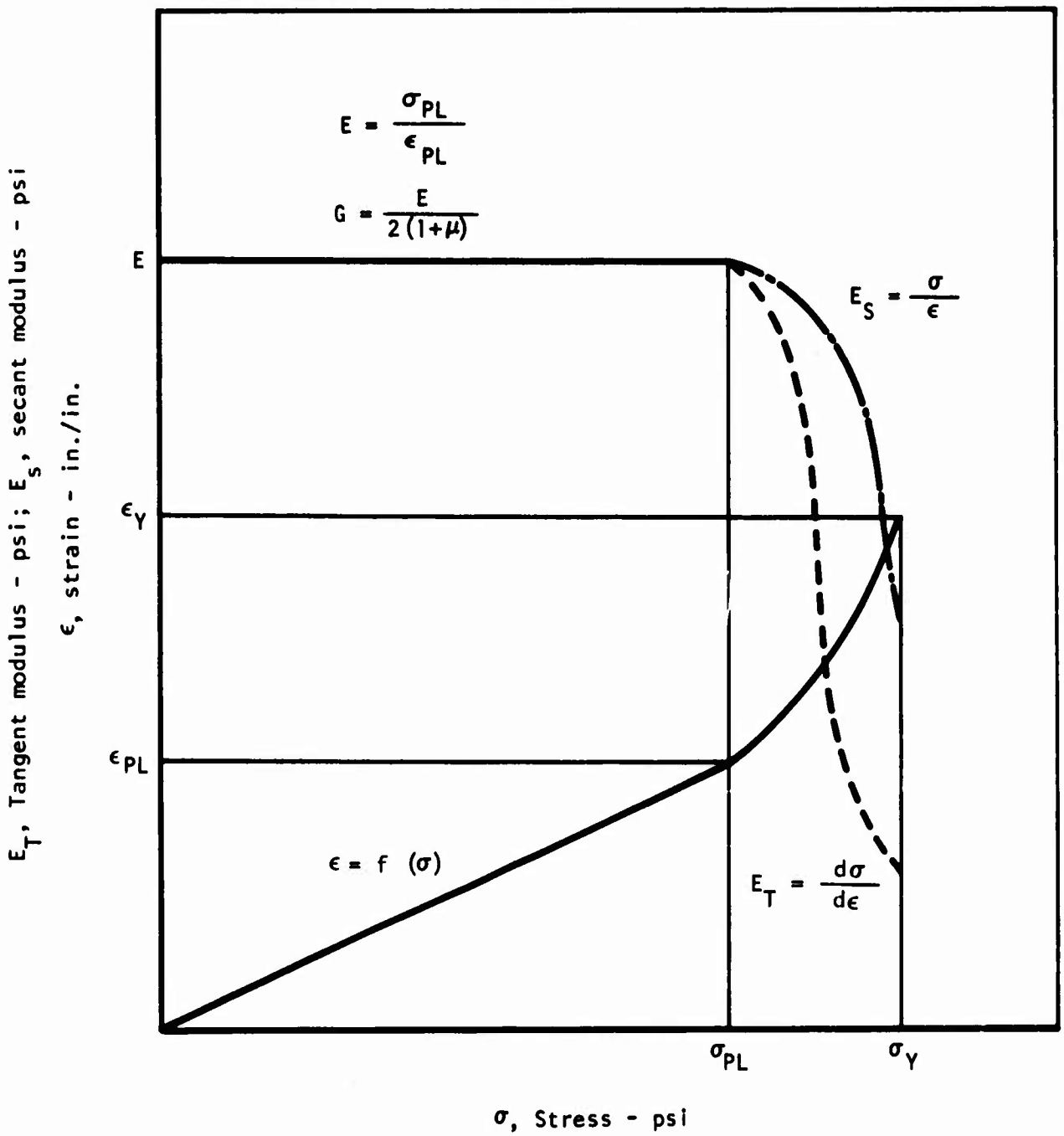

Figure 11. Material stress-strain curve evaluation for elastic and plastic properties.

Other design properties obtained from the library are:

1. Poisson's ratio

2. Ultimate tensile strength

3. Ultimate shear strength

4. Ultimate bearing strength

5. Fatigue factors, fraction of ultimate tensile strength

Material ultimate tensile strength is an allowable or not-to-exceed stress level in static strength analysis. Design for repetitive loading, fatigue life can also be defined in terms of an allowable stress. Fatigue allowable stresses are defined by fatigue factors stored in the material data file. Allowable stresses to prevent fatigue failure are presented as fractions of the material ultimate tensile stress, fatigue factors. Two fatigue factors are used in the fuselage weight estimation module - one defining allowable stress under pressure loading, and the other defining material endurance limit for acoustic fatigue design.

Cabin pressurization is a cyclic occurrence that subjects the cover to possible fatigue failure. The predefined fatigue factor defines an allowable stress for a loading from zero to limit pressure 20,000 times with a stress concentration factor of 4.0. Endurance limit is defined as the failure stress of a polished specimen (K_t = 1) under fully reversing load for an infinite number of cycles. This parameter is used in the empirical formulations for the prevention of acoustic fatigue.

Fatigue factors can be revised to reflect the actual vehicle loading spectrum by user revisions to the material properties library data or by executing the fatigue module. Details on fatigue methods and program descriptions are presented in Volume IV.

Table 4 lists the materials and alloys found in the initial compilation of the material data bank. To allow for ease in identification, each material is identified by record number and descriptive title. This title is always included in the output data set describing the selected structural material for the individual vehicle components being analyzed. This identification of the material used is necessary because material alloy and form, along with the source of the data, must be easily related to the solution of each problem. Data reflecting properties at several operating temperatures after specific exposure at temperatures are included in this file. These properties can be selected when similar requirements are specified for a problem.

For additional discussion of the manner in which materials properties are established, refer to Volume IV.

TABLE 4. MATERIAL LIBRARY DATA

Material ID No.	Material Description	Density (lb/in.^{3})	Basis[1]	Thickness (in.)	Temperature Range (°F)	Room Temp Properties (psi) FCY	FSU
1	2024-T81 Al clad sheet	0.100	S	0.063-0.250	80	57,000	39,000
2	2024-T851 Al bare plate	0.100	S[2]	0.500-1.000	80-300	58,500	38,000
3	2024-T851 Al bare plate	0.100	S[3]	1.000-3.000	80-350	54,500	37,500
4	7075-T6 Al clad sheet	0.101	B	0.040-0.062	80	65,000	44,000
5	7075-T6 Al bare plate	0.101	B	0.250-0.500	80	71,000	47,000
6	7075-T6511 Al extrusion	0.101	A	3.000-4.000	80	66,000	45,000
7	7075-T7351 Al bare plate	0.101	S	0.250-0.500	80	56,000	39,000
8	7050-T7351 Al bare plate	0.102	Est	—	80	66,000	42,200
9	2219-T851 Al bare sheet/plate	0.102	Est	0.250-2.000	80	48,000	36,000
10	7178-T6 Al clad sheet	0.102	B	0.045-0.249	80	75,000	48,000
11	7178-T6 Al bare sheet	0.102	B[4]	0.045-0.249	80-280	75,000	49,000
12	7079-T651 Al bare plate	0.099	A	0.250-1.500	80	63,000	42,000
13	6Al-4V Ti annealed sheet/plate	0.160	B	-0.250	80-500	138,000	81,000
14	6Al-4V Ti annealed plate	0.160	S	0.187-4.000	80-350	126,000	76,000
15	9Ni-4CO-0.2C steel sheet/plate	0.283	Est	—	80	188,000	118,000
16	17-4PH (H900)	0.282	Est	—	80	165,000	120,000

(1) The basis A, B, and S are as defined in MIL-HDBK-5A.

(2) After exposure to 290° F for 120 hours.

(3) After exposure to 265° F for 390 hours.

(4) After exposure to 280° F for 120 hours.

SHELL SYNTHESIS

Geometric definitions and constraints, loads, and design criteria are parameters evaluated in the synthesis of shell members. Covers, minor frames, and longitudinal members form the basic structural grid work that resists vehicle shear and bending loads. Covers are thin sheets which are efficient in resisting shear and tension loads, but inefficient in resisting compression loads. Stiffening members, minor frames, and stringers or longerons are used to provide the capability for resisting compression loads.

Major frames, required for the redistribution of concentrated external loads, are only dependent on these loads and the path of balancing forces and, therefore, are synthesized independently. Pressure bulkhead design criteria and sizing are also evaluated independently for local considerations.

Several assumptions have been made to minimize the multiplicity of variables and thus simplify the synthesis process. The shell is assumed to be composed of four unique sectors - the upper, lower, and two sides - for which design requirements would differ. The cover and minor frame design for the upper and lower sectors are dependent on material minimum thicknesses, local panel flutter, acoustics, pressure, stiffness, and stability. In addition to these requirements, the side sector is designed to resist vertical shear load. Cover and longitudinal members resist the bending load while minor frames provide the required stability. In the case of stringer construction, all stringers within a sector are assumed to be of equal cross-sectional area. Stringers in the side sectors are sized to satisfy minimum area and cover support requirements. Upper and lower sector stringers (longerons) are sized to resist that part of the bending load which is not reacted by the cover and side sector stringers.

Practical considerations, primarily computer central core time, have led to sizing procedures with few iterative loops. Basic shell synthesis is controlled by subroutine FUSSHL. This routine controls the evaluation of loads and sizing at each of the synthesis cuts. There are two basic searching operations at each cut. Subroutine LONGS controls the stringer spacing search procedure. Frame spacing search is controlled by subroutine FPANEL. This procedure is nested within the stringer spacing search loop. Initial spacing in either search is a predefined minimum spacing. Should stringer spacing dictate four or less stringers, the search is abbreviated at four

stringers. Frame spacing search is limited by a predetermined maximum which is defined as a fraction of shell diameter.

At the specified synthesis cut, spacing is increased until the lumped weight of covers, minor frames, and longitudinal members indicates an upward trend. An increase of weight with increase in spacing or an optimum less than the initial spacing abbreviates the search. A final sizing pass is made at the spacing prior to the upward weight trend. Spacings are evaluated at fixed increments such that the derived optimum spacing could be in error by a maximum of half the increment. Weight-spacing variations are, in general, flat in the region of practical design limits such that a more precise solution is not consistent with the scope of this program. If required, spacing increment may be decreased by the user to obtain refined solutions. Controls are also provided such that both stringer and frame spacings may be restricted to user-determined input constraints. Another program feature is the capability of predefining frame spacing or searching separately at each cut.

Since all geometric constraints are established within the control routines (FUSSHL, LONGS, FPANEL), synthesis routines are configured for point design solutions. Component sizing methods and formulations are, therefore, oriented toward application of criteria on a predefined geometric model.

Cover

Subroutine FCOVER establishes cover thickness to satisfy strength, flutter, acoustic fatigue, and minimum thickness. Should the shell section be pressurized or contain fuel, subroutine CVPRES evaluates pressure requirements. The cover sizing procedure starts at minimum thicknesses and proceeds through a systematic check of the different criteria.

Cover Model

The program model of the cover is shown in the following sketch. Programmed methods provide the capability for evaluating both milled and unmilled designs. The approach for milled concepts differentiates between edges, where degradation exists due to fastener holes, and the field, where net sections are not disturbed. In normal design practice, rivet spacing is four rivet hole diameters apart. Degradation due to this hole spacing is mathematically represented by a rivet factor (C_R) of 0.75.

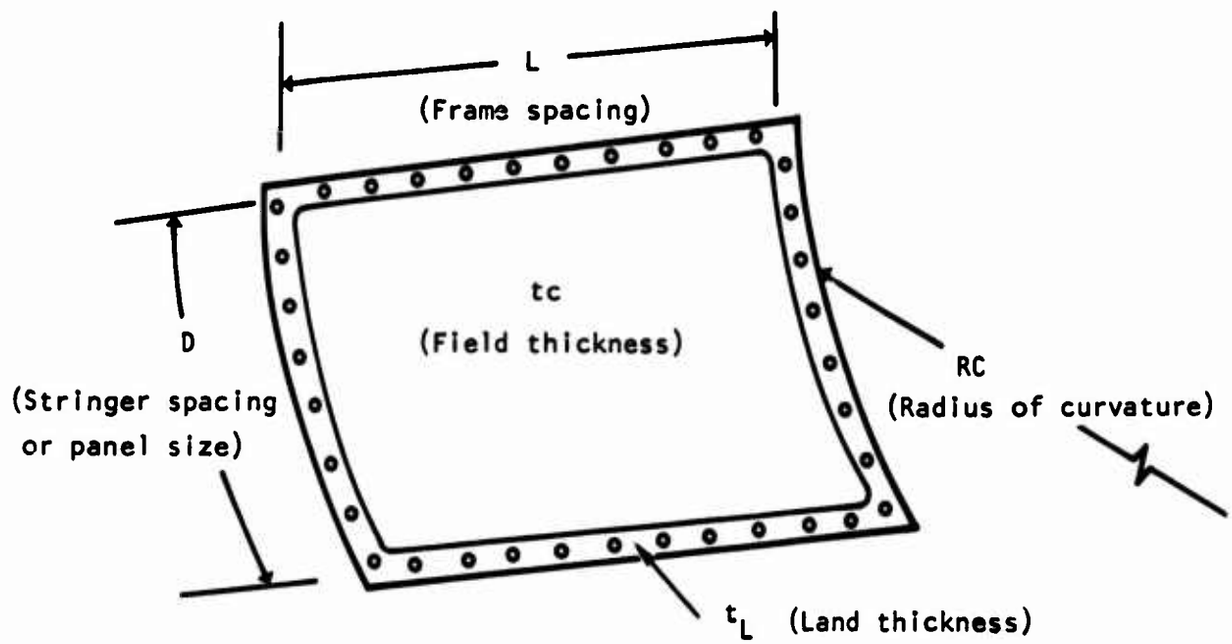

Shear Strength

The side sector cover panel is designed to satisfy shear strength. Shear flow (q) is determined in the following manner.

$$q = \frac{V\,Q}{I}$$

where

V = total vertical shear at the cut

Q = area moment of the bending elements

I = area moment of inertia of the bending elements

Assuming that the section masses are concentrated at the longerons or stringers and that the areas are equal, the equation for shear flow may be reduced to an equation dependent only on element location.

$$q = \frac{VQ}{I} = \frac{V\sum AZ}{\sum AZ^2} = \frac{V\sum Z}{\sum Z^2}$$

The maximum shear flow occurs at the midpoint of the side panel where Q is determined for the quadrant from the top centerline to the horizontal neutral axis, and I is determined for the total section.

Cover thickness to satisfy block shear strength is

$$t_c = \frac{q}{C_R F_{SU}} \quad \text{for unmilled riveted panels}$$

and

$$t_c = \frac{q}{F_{SU}} \quad \text{for milled panels}$$

This thickness is compared against minimum gage, the greater of which is used as a first approximation to determine the shear buckling coefficient (k_s). The value for k_s is assumed to be 7.5 for flat panels. The program approximation of the buckling coefficient for curved panels is superimposed on design curves for critical buckling coefficients in Figure 12. The equations are as follows:

$$b = \text{minimum of D or L}$$

$$Z = \frac{b^2}{RCt_c} \sqrt{1 - \mu^2}$$

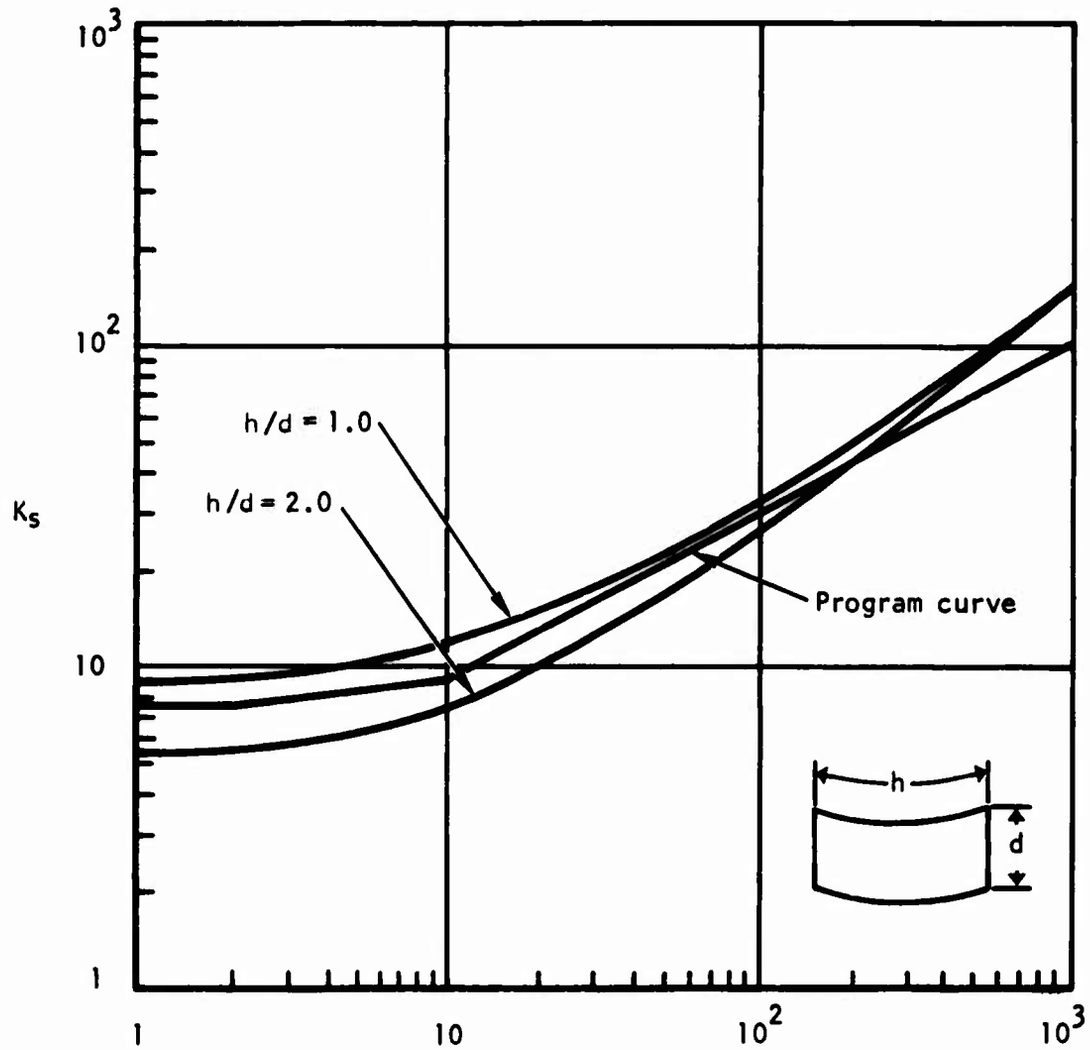

$$Z = \frac{d^2}{Rt}\sqrt{1 - \mu^2}$$

(b) $h \geq d$

Figure 12. Shear buckling coefficient.

for

$RC = \infty$ (flat panel), $K_S = 7.5$

$Z < 2$, $K_S = 7.5$

$2 < Z < 10$, $K_S = 7.5\left(\frac{Z}{2}\right)^{0.113}$

$10 < Z$, $K_S = 9\left(\frac{Z}{10}\right)^{0.522}$

Having determined the buckling coefficient, a check can be made on the postbuckled strength.

$$F_{SCR} = \frac{K_S \pi^2 E}{12 (1 - \mu^2)} \left(\frac{t_c}{b}\right)^2$$

If the critical buckling stress (F_{SCR}) is greater than the block shear stress, strength conditions are satisfied. If critical stress is less than the block shear stress, cover is sized for postbuckled strength. The allowable shear stress is:

$$F_{Sallow} = F_{SCR} + \sin\alpha \cos\alpha \, (C_R F_{TU} - F_{SCR})$$

where

C_R = 1.0 on milled panels

= 0.75 on unmilled panels

Substituting into the foregoing equation

$$F_{Sallow} = q/t_c = \frac{K_S \pi^2 E}{12(1 - \mu^2)} \left(\frac{t_c}{b}\right)^2 (1 - \sin\alpha \cos\alpha)$$

$$+ C_R F_{TU} \sin\alpha \cos\alpha$$

and

$$\left(\frac{K_S \pi^2 E}{12(1 - \mu^2)b^2}\right) t_c^3 + \left(\frac{C_R F_{TU} \sin\alpha \cos\alpha}{1 - \sin\alpha \cos\alpha}\right) t_c$$

$$- \frac{q}{(1 - \sin\alpha \cos\alpha)} = 0$$

At this stage in the sizing procedure, nothing is known about the diagonal tension angle because intermediate frame and stringer sizing is not known. However, if an initial estimate of 45 degrees is used for the diagonal tension angle, the foregoing cubic equation for thickness may be solved. This equation has one real positive root.

Let

$$K_1 = \frac{K_S \pi^2 E}{12(1 - \mu^2)\, b^2}$$

$$K_2 = \frac{C_R F_{Tu} \sin\alpha \cos\alpha}{1 - \sin\alpha \cos\alpha}$$

$$K_3 = \frac{q}{1 - \sin\alpha \cos\alpha}$$

then:

$$t_c = \left\{\frac{K_3}{2K_1} + \left[\left(\frac{K_3}{2K_1}\right)^2 + \left(\frac{K_2}{3K_1}\right)^3\right]^{1/2}\right\}^{1/3}$$

$$- \left\{\left[\left(\frac{K_3}{2K_1}\right)^2 + \left(\frac{K_2}{3K_1}\right)^3\right]^{1/2} - \frac{K_3}{2K_1}\right\}^{1/3}$$

On milled panels, the edges are checked against the net section allowable.

$$t_L = \frac{q}{C_R F_{SU}}$$

Cover Pressure Design

The fuselage shell structure is subjected to pressure from various sources. Some of these sources are cabin pressurization, fuel, water, aerodynamics, acoustics, and nuclear burst. The effects of acoustic overpressures are discussed in the section on the prevention of acoustic fatigue. Aerodynamic and nuclear burst pressures are not evaluated, but can be defined to the program as hypothetical internal pressure.

Cabin pressurization is a cyclic occurrence that subjects the cover to possible fatigue failure. The maximum allowable stress to prevent fatigue is represented as a fraction of the material ultimate tensile strength. The preprogrammed allowable represents a change from zero to peak pressure 20,000 times during the vehicles useful life and a stress concentration factor of 4.0. This allowable can be revised to reflect the true spectrum by executing the fatigue module. The margin of safety for strength design of manned compartments is 2.0 as opposed to 1.5 in unmanned sections. The human environment pressure is designated by a negative value of pressure (does not indicate a vacuum). Strength and fatigue requirements are investigated to determine the design.

Pressure due to fuel or liquids in compartments is also cyclic in nature. However, the dependency on usage, location, tank size, and vehicle maneuver spectrum makes fatigue evaluation a complicated analysis that is only investigated in the final vehicle design. The pressure due to longitudinal head is not evaluated. For the purpose of determining hydraulic pressure, the tank is assumed to be full for the vehicle maneuver condition which produces the maximum positive and negative load factors. The load factor at the synthesis cut is:

$$N_{Z_i} = N_{Z_v} + \frac{\dot{Q}R}{12g}$$

where

N_{Z_v} = vehicle vertical load factor at the center of gravity

$\dot{Q}$ = pitch acceleration

R = the distance from the CG to the synthesis cut

g = acceleration of gravity

Positive load factor is used to determine the maximum pressure at the bottom of the tank.

$$P_i = P_o + \rho N_{Zi} h$$

where

P_o = vent space pressure

ρ = liquid density

h = vertical depth of the tank

Conversely, the negative load factor is used to determine the maximum pressure which would occur at the top of the tank. The presence of decks and the location of fuel above and below the deck determines the design pressure for the upper, side, and lower quadrant panels. Should the tank encompass the total section, the upper cover is designed to the pressure due to negative load factor, and the side and lower cover panels are designed to pressure due to the maximum positive load factor. Should fuel be above a deck, the lower cover does not experience pressure. The side panel is designed for pressure due to negative load factor if fuel is below the deck.

The shell internal pressure is reacted by the cover panels in either hoop tension, bending and diaphragm action, or by the combination of both. The covers on circular fuselage go into hoop tension. Flat fuselage panels resist the pressure forces by combined bending and diaphragm action in beaming the forces to the frames. Transports generally have circular fuselages; however, the majority of vehicles have shapes that are neither circular nor flat. Iterative methods or Fourier solutions, which are means for determining cover stress on such irregular shapes, require more design definition and computer time than practical for a program of this nature. The assumption that the cover panel would support pressure either by hoop or by bending-diaphragm action gives reasonable results for the shape extremes. Further, if it can be assumed that one of these is the predominant load path, the intermediate shape requirements can be approximated. The path of least energy, that which requires the thinnest structure, is used to synthesize the structure.

The required cover thickness for hoop stress is based on the approximation of the radius of curvature.

$$t = \frac{P R_c}{\sigma}$$

where

σ = allowable stress

R_c = radius of curvature

Strip theory is used to evaluate the combined bending diaphragm action. The maximum cover stress occurs at the supports. The bending moment is maximum at the edges, goes through an inflection point, and is smaller at the midspan. Combined bending and diaphragm action result in the second highest stresses occurring at the midspan. Therefore, single-thickness covers are design by the stress at the edges. Land thickness for milled cover panels is determined by the edge stress, and the field thickness is determined by the stress at the midspan. The analytical solutions are expressed by numerical values of dimensionless coefficients in Reference 2. This same information is presented as curves in the Royal Aeronautical Society notes. The log log plot of these curves (Figure 15) suggests a numerical approximation. The derivation of thickness as an explicit function of these variables is obtained by a curve fit approach.

The curve fit approximation at the edge of the panel is:

$$\frac{\sigma}{E}\left(\frac{b}{t}\right)^2 \approx 1.4725\left[\frac{P}{E}\left(\frac{b}{t}\right)^4\right]^{0.69412}$$

or

$$t = \frac{1.646\ b\ P^{0.894}\ E^{0.394}}{\sigma^{1.288}}$$

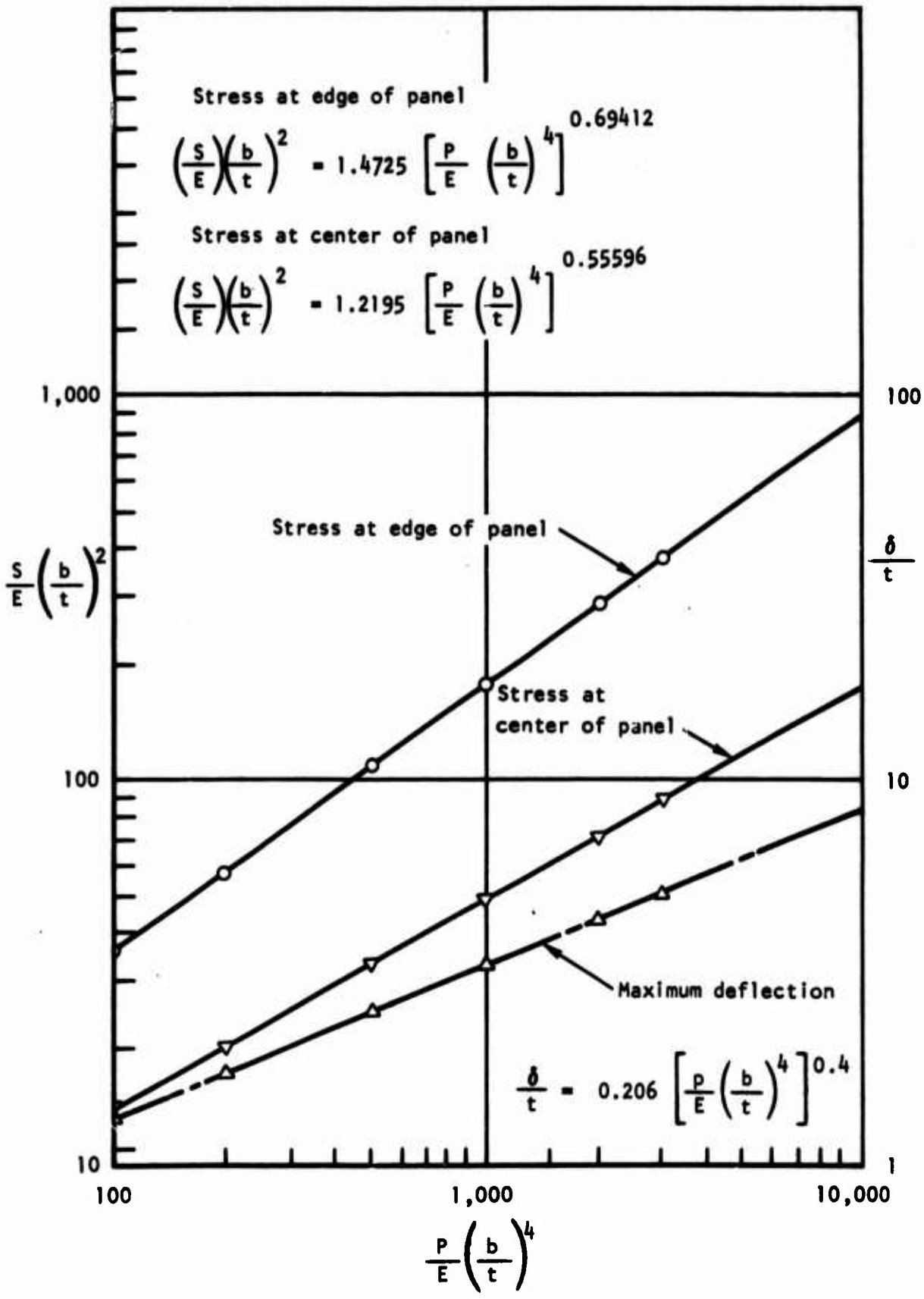

Figure 13. Diaphragm stresses and deflections.

The midspan thickness and deflections are:

$$\frac{\sigma}{E}\left(\frac{b}{t}\right)^2 \approx 1.2195\left[\frac{P}{E}\left(\frac{b}{t}\right)^4\right]^{0.55596}$$

or

$$t = \frac{1.3769\ b\ P^{2.484}}{\sigma^{4.467}} E^{1.984}$$

and

$$\frac{\delta}{t} \approx 0.206\left[\frac{P}{E}\left(\frac{b}{t}\right)^4\right]^{0.4}$$

or

$$t = \frac{0.071853\left(\frac{P}{E}\right)^{2/3} b^{8/3}}{\delta^{5/3}}$$

The deflection (δ) is not used in fuselage shell synthesis, but is examined in duct design.

In the foregoing equations, stress and pressure are in terms of limit rather than ultimate design. This is a normal design practice when internal loads are dependent on deflected shape.

The stabilizing effect of pressure on cover elements increases strength capability and flutter resistance. The occurrence of design pressure and critical loads or flutter speed simultaneously is a question of probability and, therefore, this effect is not evaluated for cover design.

Local Panel Flutter

Critical panel flutter requirements are derived by the program through a process of checking mach-altitude points for each of the 23 possible flight loading conditions, and nine additional points on the limit speed envelope. The user has the option of inputing his own estimates of critical panel flutter parameters. These user inputs are checked against program-derived values to insure that all reasonably probable panel flutter conditions are adequately surveyed. This process does not evaluate subsonic flight conditions.

The approach used to insure the prevention of local panel flutter is based on methods described in Reference 6. This approach consists of the determination of the mach number parameter and the baseline design parameter. The baseline panel thickness obtained by this approach can then be revised by correction factors. These correction factors are independently derived to account for in-plane loaded panels, pressure differentials, curvature, and other parameters that influence flutter design.

The two significant parameters (in-plane stress and curvature) are not evaluated in SWEEP. The effect due to neglecting panel loading could introduce optimistic panel sizing, while the omission of curvature effects introduces conservatism in the analysis.

Dynamic pressures and critical flutter parameters for flight conditions analyzed are derived in subroutine QCRIT.

Dynamic pressures are derived using a curve-fit of standard day atmospheric properties as follows:

- For altitudes ≤ 20,000 ft:

$$Q = (M)^2 \left[1479.757 - 52.187(H) + 0.619868(H)^2\right]$$

- For 20,000 ft < altitude ≤ 70,000 ft:

$$Q = (M)^2 \left[1465.175 - 50.76695(H) + 0.6434412(H)^2 - 0.002907194(H)^3\right]$$

- For altitudes > 70,000 ft:

$$Q = (M)^2 \left(\frac{199.659}{H}\right)^4$$

where

Q = dynamic pressure, psf

M = mach number

H = altitude, ft

The mach number effects are derived by a curve-fit approximation of Figure 14[6]. The curve-fit equations are as follows:

- For mach 1.0 to 1.4:

$$F(M) = 0.4851674 + 1.66456\,(M-1)^3$$

- For mach 1.4 to 2.0:

$$F(M) = 0.488412 - 0.4037203 \cos\left(\frac{M - 1.4}{0.6}\,\pi\right)$$

$$+ 0.4849271\sqrt{M^2 - 1}$$

- For mach > 2.0:

$$F(M) = \beta = \sqrt{M^2 - 1}$$

The baseline panel design curve [6] is shown in Figure 15. The curve used in SWEEP (subroutine FCOVER) deviates from the proposed baseline curve for values of L/W less than 2. This difference, although less than the curve presented in NACA TN D-451 which Reference 6 states as "excessive over design for some applications," reflects the current design practice.

The curve-fit approximation for this parameter is as follows:

$$\left(\frac{F(M)E}{q}\right)^{1/3} t/L = \phi_B = 0.5551841 -$$

$$0.1686944\,(L/W) + 0.02169992\,(L/W)^2 -$$

$$0.000963694\,(L/W)^3$$

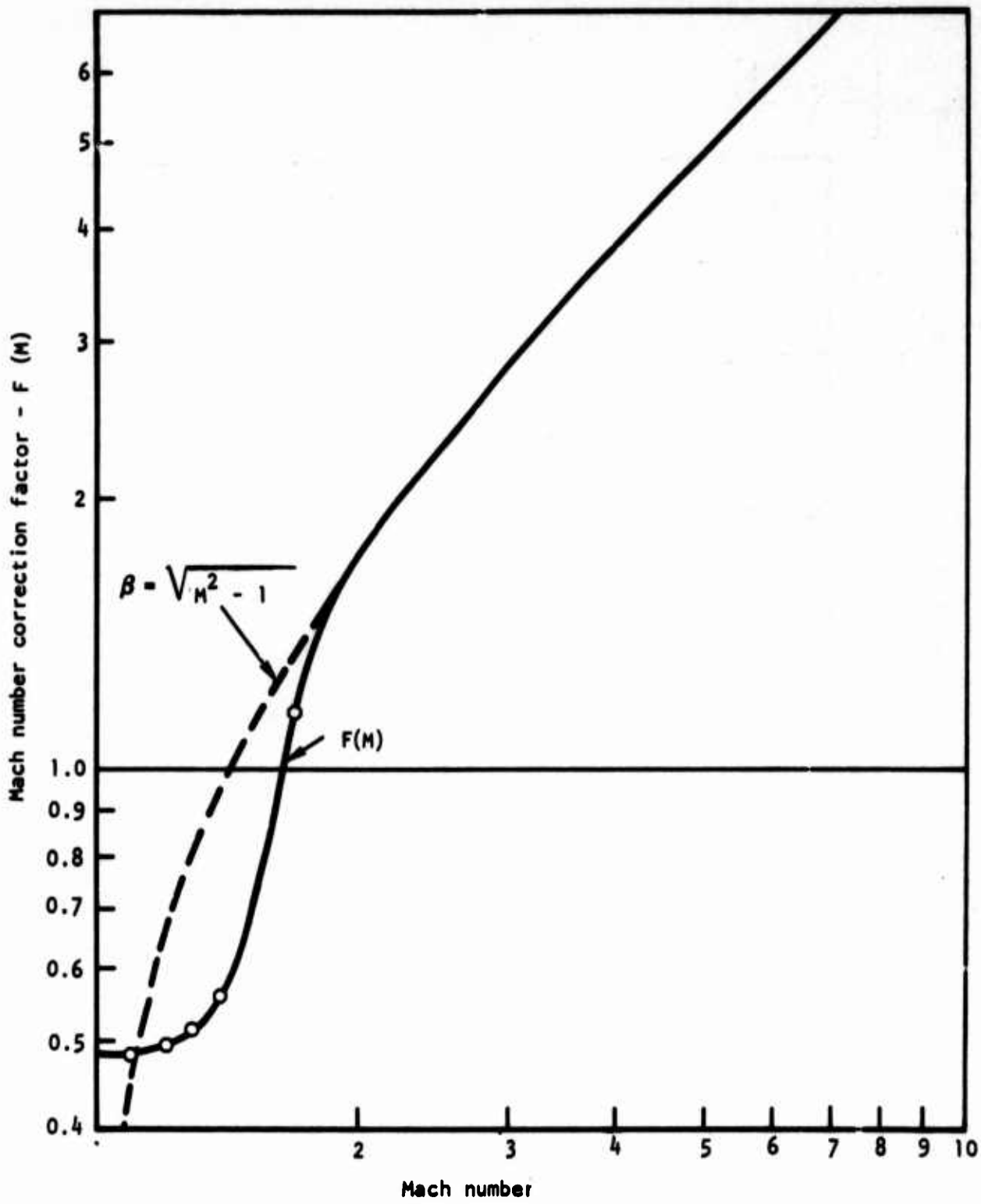

Figure 14. Panel flutter mach number correction factor.

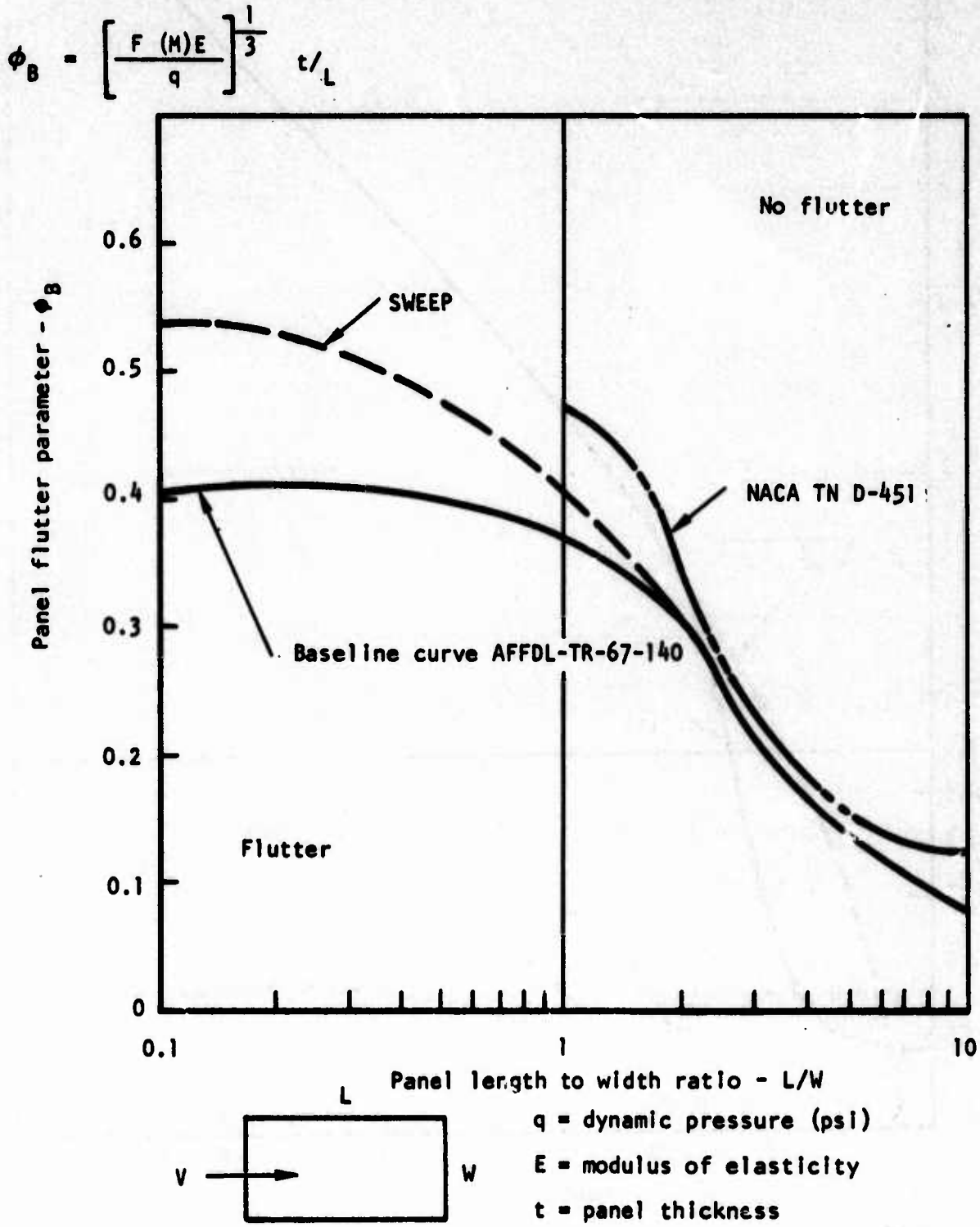

Figure 15. Panel flutter parameter versus aspect ratio.

For values of L/W greater than 10, this curve-fit approach is not valid. The value 10 is substituted for L/W should this condition occur. Although this assumption seems questionable, panels with aspect ratios greater than 10 rarely exist on fuselage structures.

The baseline thickness is then determined

$$t_b = \frac{\phi_B L}{\left[\frac{F(M)\ E}{q}\right]^{1/3}}$$

A single value for boundary layer growth length correction factor is currently used in this estimating procedure. This approach, although not applicable near the leading edges, is reasonably representative for the major portions of the fuselage.

The critical panel flutter speed is determine by investigating the vehicle flight envelope in terms of mach number and altitude. The flutter design point occurs when q/F(M) E is maximum.

Acoustic Fatigue

The acoustic environment on aircraft structures occurs from propulsion systems and from turbulent boundary layer. Jet engine exhaust is considered to be the primary contributor of detrimental noise and, as a consequence, programmed methods are oriented toward the prevention of structural failure due to engine noise.

Jet engine noise is generated by turbulent mixing of the exhaust gas with the ambient atmosphere. This noise is generally maximum on a conic surface of approximately 40 degrees off the nozzle centerline. In the conceptual phase of vehicle synthesis, the prevention of this noise impingement is as important a consideration as the structural requirements. The prediction of acoustic isobars is not within the capability of this program. The method requires prior knowledge of acoustic pressure in decibels overall (db_{oa}), and approaches the structural synthesis on an empirical basis.

Noise measurement is a relative term based on a reference pressure, P_o, of 0.0002 dyne per square centimeter, as defined in equation 1.

$$db = 20 \log_{10}\left(\frac{P}{Po}\right) \qquad (1)$$

The pressure is obtained by rearranging this equation as shown in equation 2.

$$P_{oa} = Po\ 10^{\left(\frac{db_{oa}}{20}\right)} \tag{2}$$

where

$Po = 2.9 \times 10^{-9}$ psi (0.0002 dyne/cm^2)

P_{oa} = overall pressure (psi)

Sound in air is a propagated pressure phenomenon. The pitch is determined by the vibration frequency of the source, and loudness is determined by its vibration amplitude. A pure tone produces a sinusoidal disturbance having equal positive and negative differential pressures about an atmospheric pressure level. Engine noise is random with a wide frequency range. One measure of pressure level is random spectrum decibels, db_r. Another measure of pressure level is overall decibels, db_{oa}, which for jet noise, can be represented by the approximate relationship shown in equation 3.

$$db_{oa} \approx db_r + 30 \tag{3}$$

The frequency spectrum shape of engine noise and the high-frequency cyclic nature of the structural response suggest designing to the material endurance limit under fully reversing load. The approach then becomes a single-life approximation as opposed to a more rigorous solution for variable life.

Reference 7 presents the relationship between various factors in the form of design nomographs. The programmed approach provides a numerical correlation between acoustic pressure, material property data, geometry, and construction with the design data presented in Figures 16, 17, and 18. These charts, for the specific configurations tested, are considered to be adequate to predict an allowable sound pressure level for a given life within a ±6 db range. The 6 db range in the foregoing represents approximately 100-percent deviation in pressure level. On the basis of structural sizing, this deviation represents approximately 41-percent variation in skin thickness. A significant contributor to this variance is the difficulty of measuring or predicting sound intensity. Calculation of dynamic stress at

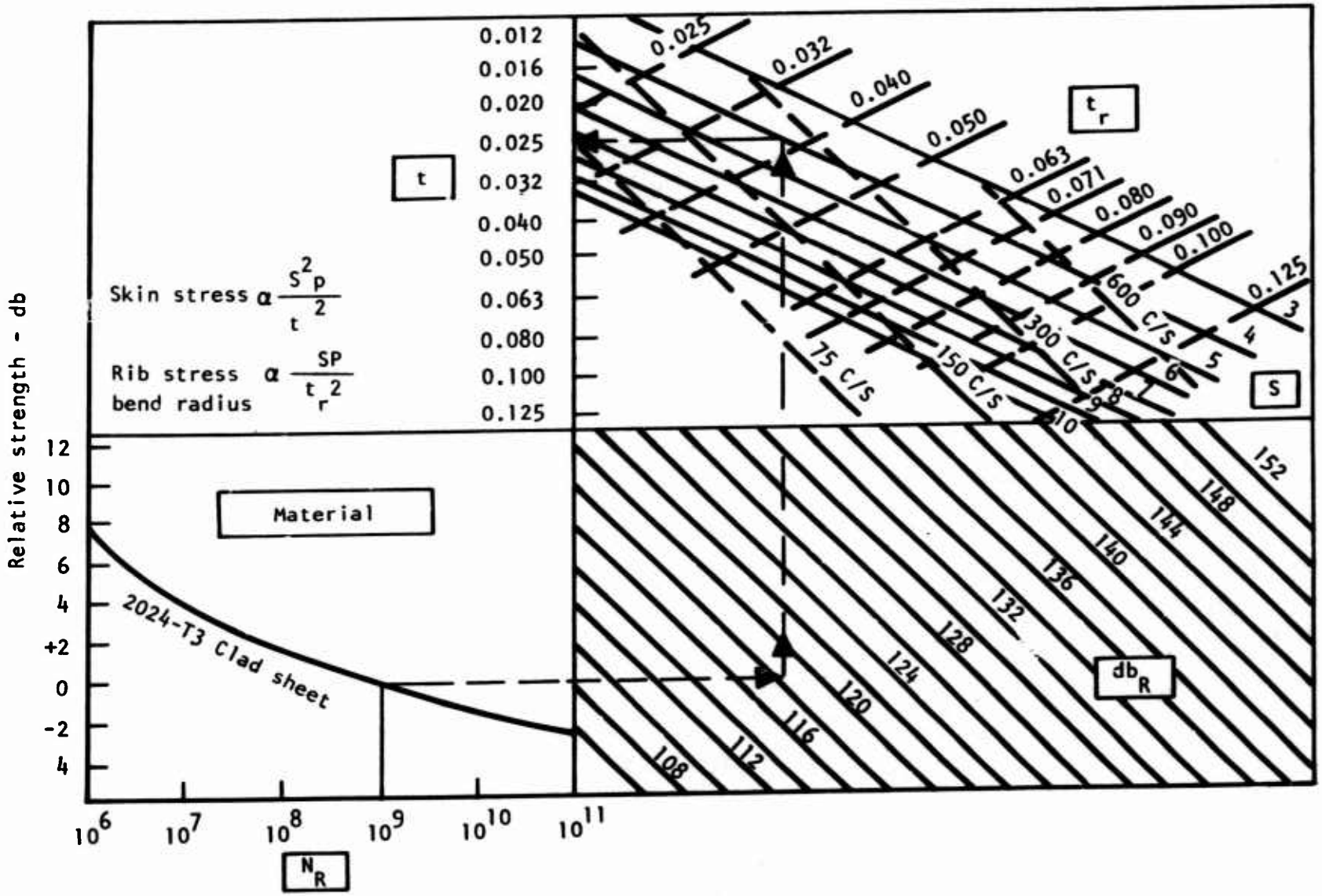

Figure 16. Design chart skin and rib construction.

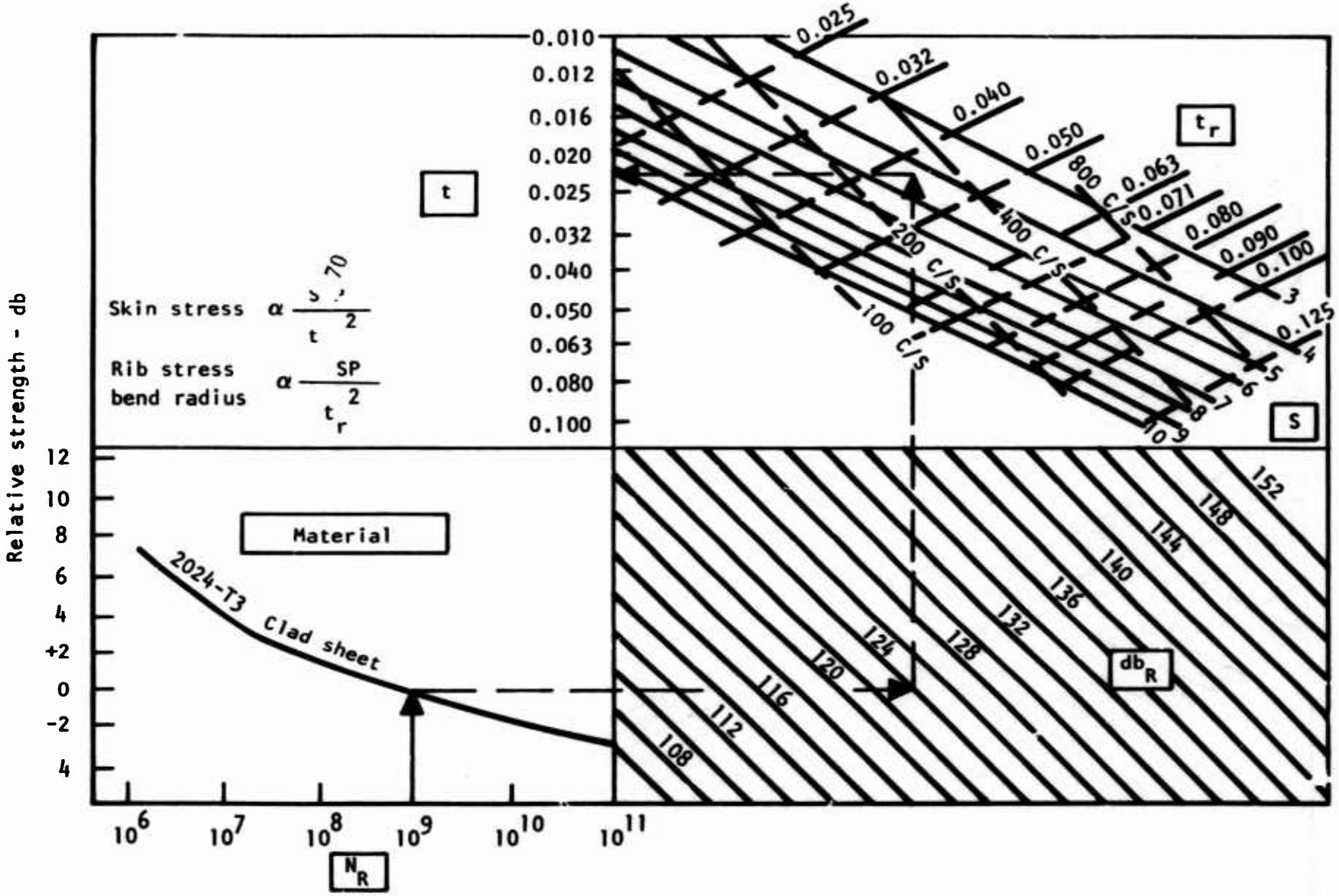

Figure 17. Design chart skin and rib with bonded doubler.

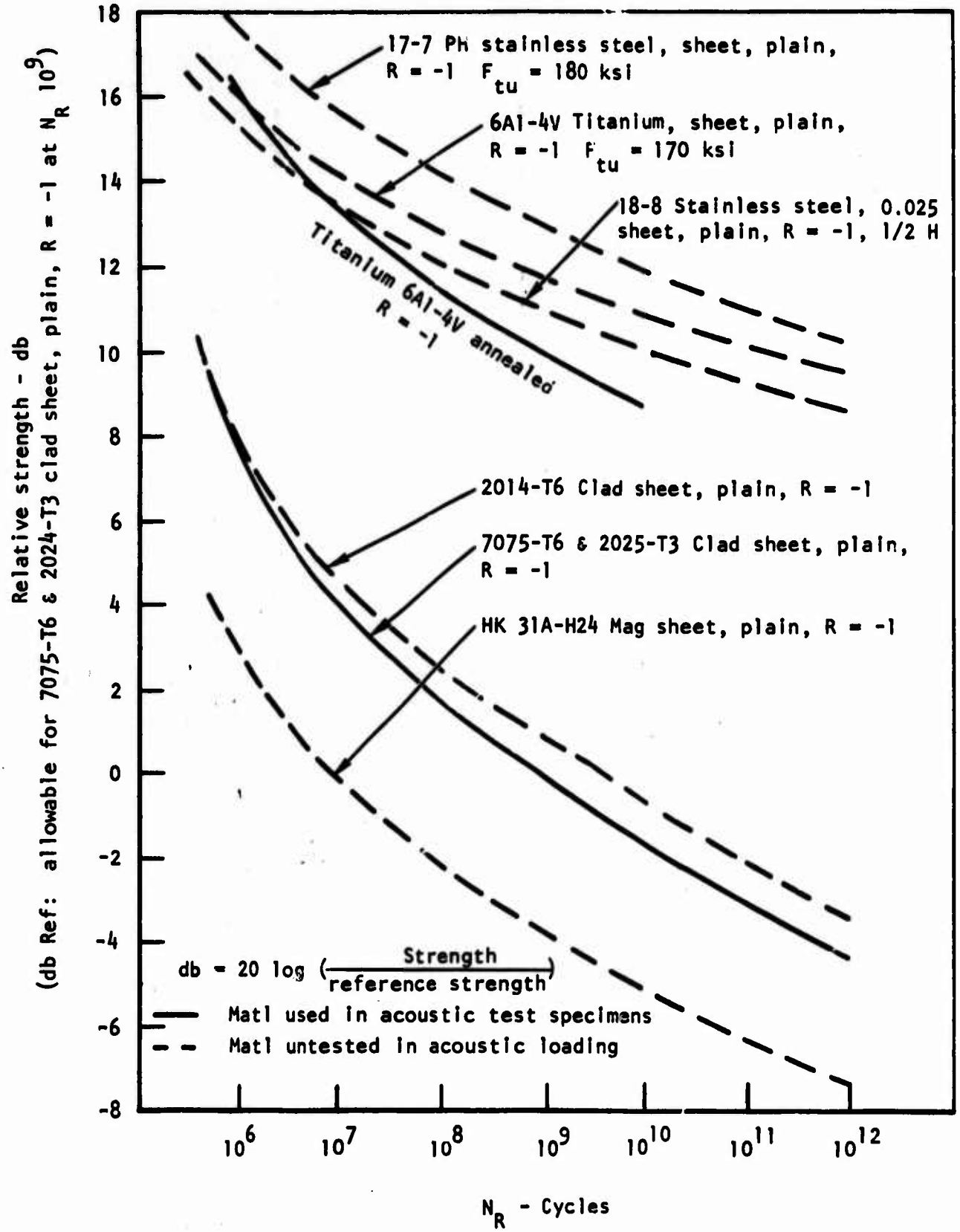

Figure 18. Relative fatigue strengths of materials under random excitation.

localized, fatigue-critical sites is at best a poor approximate procedure. Dependence on bodies of measured data, when available, is far preferable. The variation between computed and measured stress ratios are on the order of ±3 db. Although confronted with these limitations, the solutions presented in the form of design charts are useful for preliminary design trend data development.

The correlation approach is based on approximating the chart results at 10^9 cycles. Examination of standard s-n data, and the random s-n curve from Figure 19[7], indicate 10^9 cycles approximates the material endurance limit.

The shell structure can be modeled as shown in the following sketch resisting pressure load.

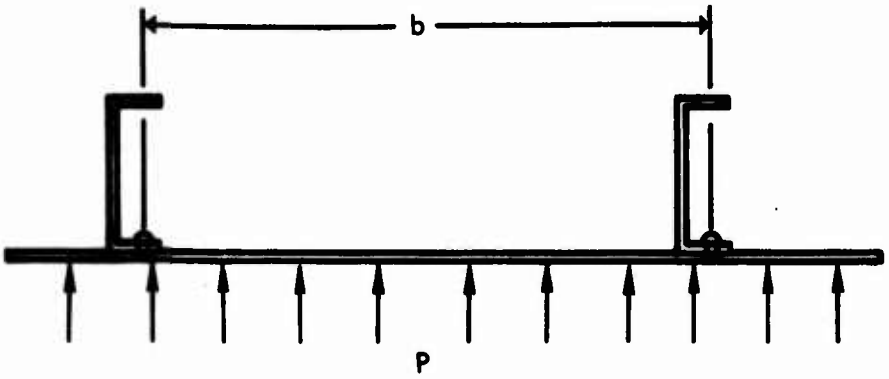

Assuming strip load distribution and pure bending theory, the maximum panel bending moment occurs at the supports.

$$M_{max} = \frac{Pb^2}{12} \tag{4}$$

The panel maximum bending stress is shown in equation 5.

$$\sigma = \frac{Pb^2}{2t^2} \tag{5}$$

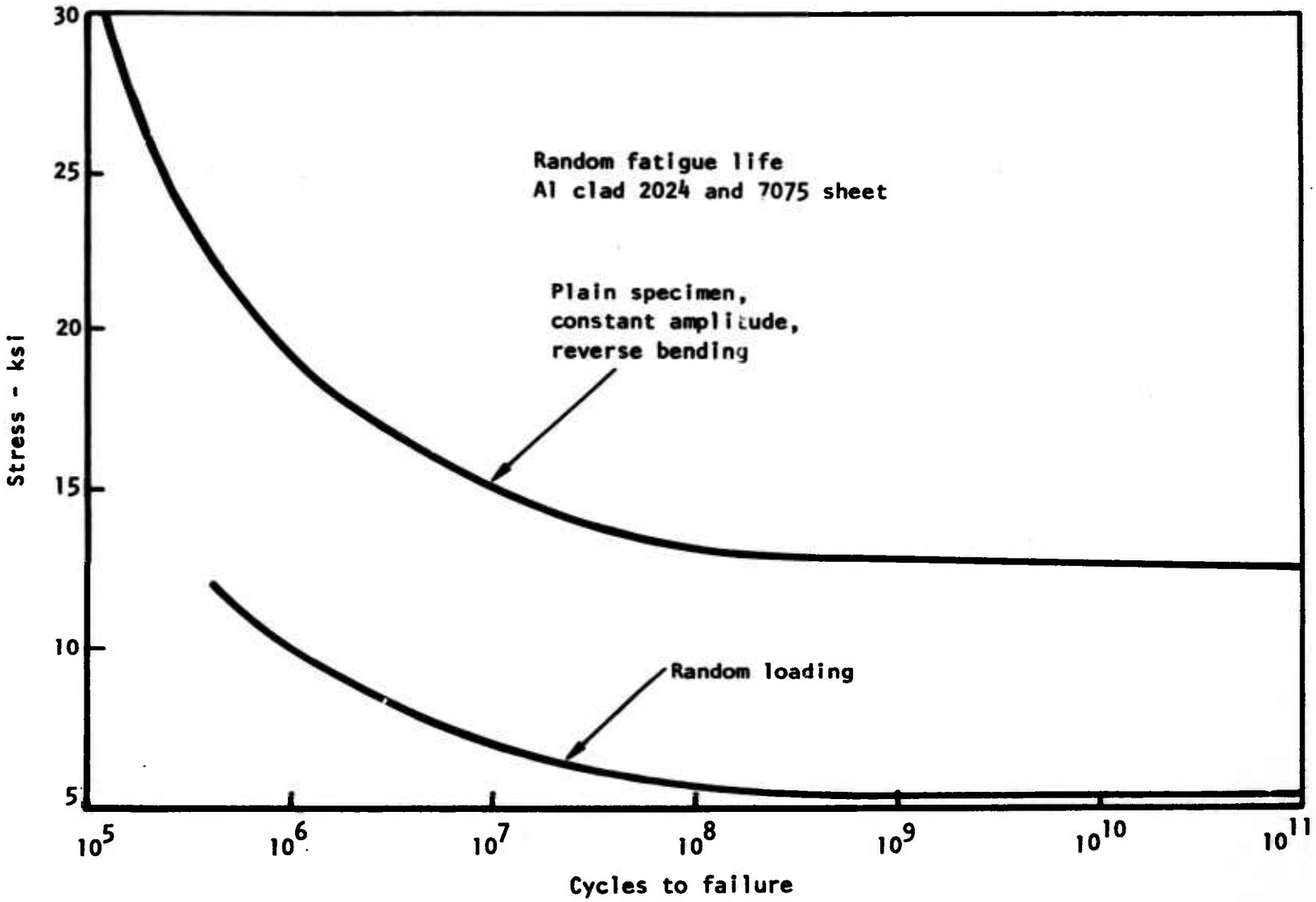

Figure 19. Random fatigue life aluminum clad 2024 and 7075 sheet.

If the allowable stress, σ, is considered to be the endurance limit of the material, the thickness required can be correlated with test data as shown in equation 6.

$$t^2 \sim \frac{Pb^2}{\sigma}$$

$$t_c = K_c b \sqrt{P/\sigma} \tag{6}$$

where

K_c - cover correlation constant

By similar analogy, the frame reaction, R, can be defined as shown in equation 7, and the frame thickness required takes the form shown in equation 8.

$$R = \frac{Pb}{2} \tag{7}$$

$$t^2 \sim \frac{Pb}{\sigma}$$

$$t_f = K_f \sqrt{bP/\sigma} \tag{8}$$

where

K_f - frame correlation constant

The correlation constants, K_c and K_f, for different structural arrangements are shown in Figure 20. Figures 20a and 20b show formed frame arrangement thickness requirements corresponding to the nomographs[7]. Figures 20(c) and 20(d) show the requirements with extruded angle arrangement which is used by SWEEP in the synthesis of minor frames. The difference between the formed frame and the extruded frame cap thickness correlation factors is due to the difference in the rotational fixity and extra material at the radius. Similarly, the factors for T-section frame caps is 6.272 with single thickness panels and 5.018 with milled panel concepts.

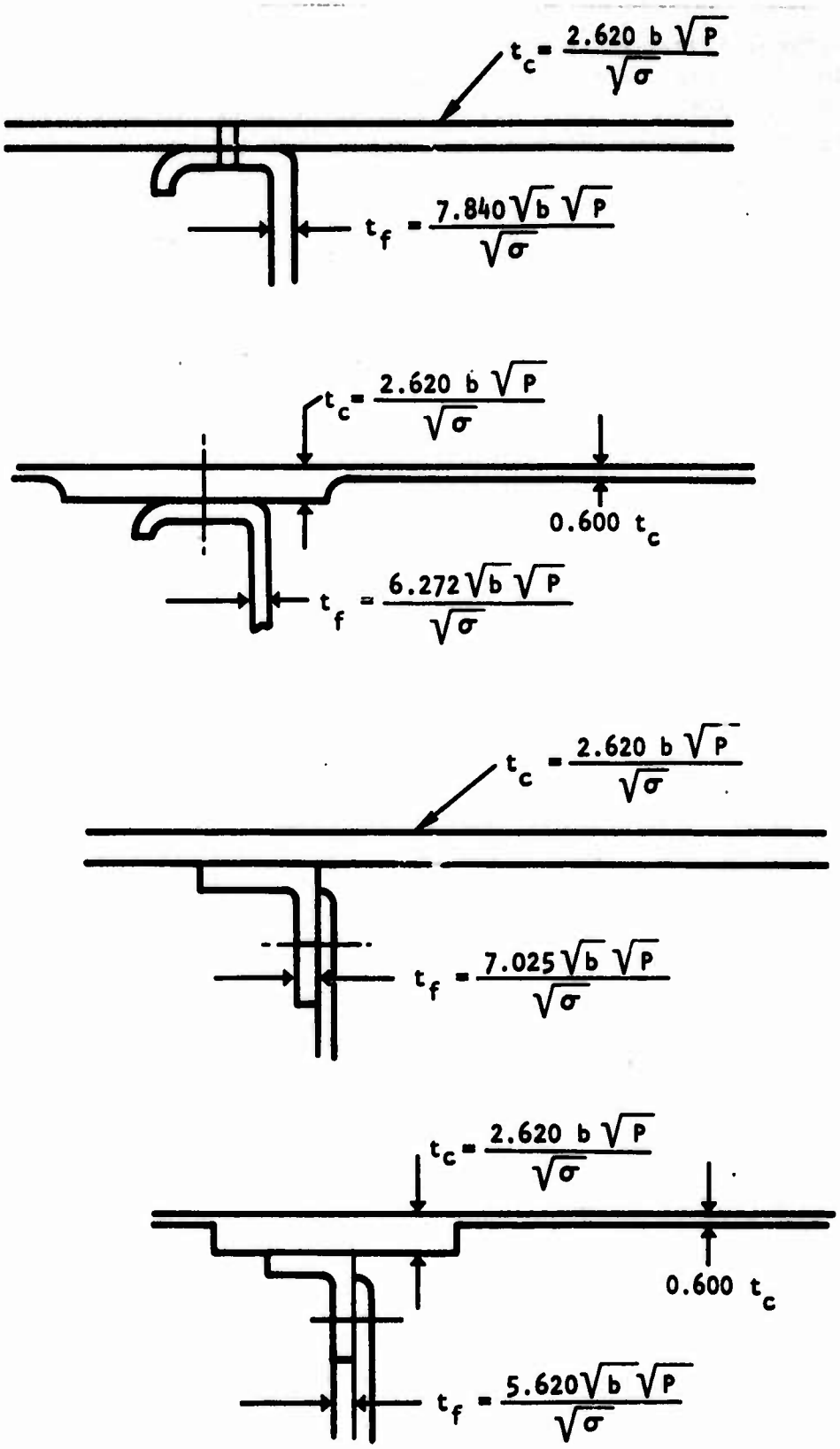

Figure 20. Structural sizing to acoustic fatigue for various arrangements.

The structural requirements predicted by this approach are compared with the sizing from the design charts in Tables 5 and 6 for 2024-T3 clad aluminum sheet. Comparisons for annealed 6Al-4V titanium and 180 ksi 17-7 stainless sheet are shown in Table 7. Figures 21 and 22 show the S-N diagrams for these materials.

The method discussed accounts for flat panel designs. Curvature correction is approximated by a curve-fit approximation of Figure 23.

$$\frac{t_c}{t_f} = 1.0794 + 0.000143(X) - 0.076475\left(\frac{1}{X}\right)$$

$$- 0.29969\,(\log X)$$

$$X = \frac{b^2}{t_L R}$$

where

b = support spacing

R = cover radius of curvature

t_L = cover land thickness (flat)

t_c = curved panel cover or frame cap thickness

t_f = flat panel cover or frame cap thickness

TABLE 5. SKIN AND RIB CONSTRUCTION

2024-T3 Al clad

$K_t = 1$

$R = -1$

$n = \infty$

$\sigma = 12400$

db_R	db_{oa}	P_{oa} (psi)	b (in.)	t_c (in.)		t_f (in.)	
				SWEEP	Ref (7)	SWEEP*	Ref (7)
118	148	0.0728	4	0.025	0.024	0.038	0.038
			6	0.038	0.036	0.046	0.046
			8	0.051	0.049	0.054	0.053
124	154	0.1453	4	0.036	0.034	0.054	0.052
			6	0.054	0.052	0.066	0.063
			8	0.072	0.068	0.076	0.074
130	160	0.290	4	0.051	0.049	0.076	0.075
			6	0.076	0.072	0.093	0.090
			8	0.101	0.097	0.107	0.105
134	164	0.4596	4	0.064	0.061	0.097	0.092
			6	0.096	0.091	0.117	0.113
			8	0.128	0.124	0.135	0.130
140	170	0.917	4	0.090	0.087	0.135	–
			6	0.135	0.127	0.165	–
			8	0.180	–	0.191	–

*Using formed frame factors

TABLE 6. MILLED SKIN AND RIB CONSTRUCTION

2024-T3 Al clad

$K_t = 1$

$R = -1$

$n = \infty$

$\sigma = 12400$

db_R	db_{oa}	P_{oa} (psi)	b (in.)	t_c (in.)		t_f (in.)	
				SWEEP	Ref (7)	SWEEP*	Ref (7)
118	148	0.0728	4	0.015	0.015	0.030	0.030
			6	0.023	0.023	0.037	0.037
			8	0.030	0.030	0.043	0.043
124	154	0.1453	4	0.022	0.022	0.043	0.042
			6	0.032	0.032	0.053	0.051
			8	0.043	0.042	0.061	0.060
130	160	0.290	4	0.030	0.030	0.061	0.060
			6	0.046	0.044	0.074	0.073
			8	0.061	0.060	0.086	0.083
134	164	0.4596	4	0.038	0.038	0.076	0.075
			6	0.057	0.055	0.094	0.090
			8	0.077	0.074	0.108	0.105
140	170	0.917	4	0.054	0.052	0.108	0.107
			6	0.081	0.078	0.132	0.126
			8	0.108	0.105	0.153	—

*Using formed frame factors

TABLE 5. SKIN AND RIB CONSTRUCTION

2024-T3 Al clad

$K_t = 1$

$R = -1$

$n = \infty$

$\sigma = 12400$

db_R	db_{oa}	P_{oa} (psi)	b (in.)	t_c (in.)		t_f (in.)	
				SWEEP	Ref (7)	SWEEP*	Ref (7)
			4	0.025	0.024	0.038	0.038
118	148	0.0728	6	0.038	0.036	0.046	0.046
			8	0.051	0.049	0.054	0.053
			4	0.036	0.034	0.054	0.052
124	154	0.1453	6	0.054	0.052	0.066	0.063
			8	0.072	0.068	0.076	0.074
			4	0.051	0.049	0.076	0.075
130	160	0.290	6	0.076	0.072	0.093	0.090
			8	0.101	0.097	0.107	0.105
			4	0.064	0.061	0.095	0.092
134	164	0.4596	6	0.096	0.091	0.117	0.113
			8	0.128	0.124	0.135	0.130
			4	0.090	0.087	0.135	–
140	170	0.917	6	0.135	0.127	0.165	–
			8	0.180	–	0.191	–

*Using formed frame factors

TABLE 6. MILLED SKIN AND RIB CONSTRUCTION

2024-T3 Al clad

$K_t = 1$

$R = -1$

$n = \infty$

$\sigma = 12400$

db_R	db_{oa}	P_{oa} (psi)	b (in.)	t_c (in.)		t_f (in.)	
				SWEEP	Ref (7)	SWEEP*	Ref (7)
118	148	0.0728	4	0.015	0.015	0.030	0.030
			6	0.023	0.023	0.037	0.037
			8	0.030	0.030	0.043	0.043
124	154	0.1453	4	0.022	0.022	0.043	0.042
			6	0.032	0.032	0.053	0.051
			8	0.043	0.042	0.061	0.060
130	160	0.290	4	0.030	0.030	0.061	0.060
			6	0.046	0.044	0.074	0.073
			8	0.061	0.060	0.086	0.083
134	164	0.4596	4	0.038	0.038	0.076	0.075
			6	0.057	0.055	0.094	0.090
			8	0.077	0.074	0.108	0.105
140	170	0.917	4	0.054	0.052	0.108	0.107
			6	0.081	0.078	0.132	0.126
			8	0.108	0.105	0.153	–

*Using formed frame factors

TABLE 7. SKIN AND RIB CONSTRUCTION 6Al-4V TITANIUM AND 17-7PH STEEL

6Al-4V annealed titanium

F_{tu} = 139,000

K_t = 1

R = -1

n = ∞

σ = 0.34 x 139,000 = 47,260 (Figure 22)

Relative Strength Index = 10db [7]

db_r	db_{oa}	P_{oa} (psi)	b (in.)	t_c (in.)		t_f (in.)	
				SWEEP	Ref (7)	SWEEP*	Ref (7)
130	160	0.290	4	0.026	0.026	0.039	0.039
			6	0.039	0.038	0.048	0.047
			8	0.052	0.052	0.055	0.055

17-7PH stainless steel

F_{tu} = 180,000

K_t = 1

R = -1

n = ∞

σ = 0.36 x 180,000 = 64800 (Figure 23)

Relative strength index = 13 db [7]

db_R	db_{oa}	P_{oa} (psi)	b (in.)	t_c (in.)		t_f (in.)	
				SWEEP	Ref (7)	SWEEP*	Ref (7)
130	160	0.290	4	0.022	0.023	0.033	0.035
			6	0.033	0.034	0.041	0.043
			8	0.044	0.047	0.047	0.049

*Using formed frame factors

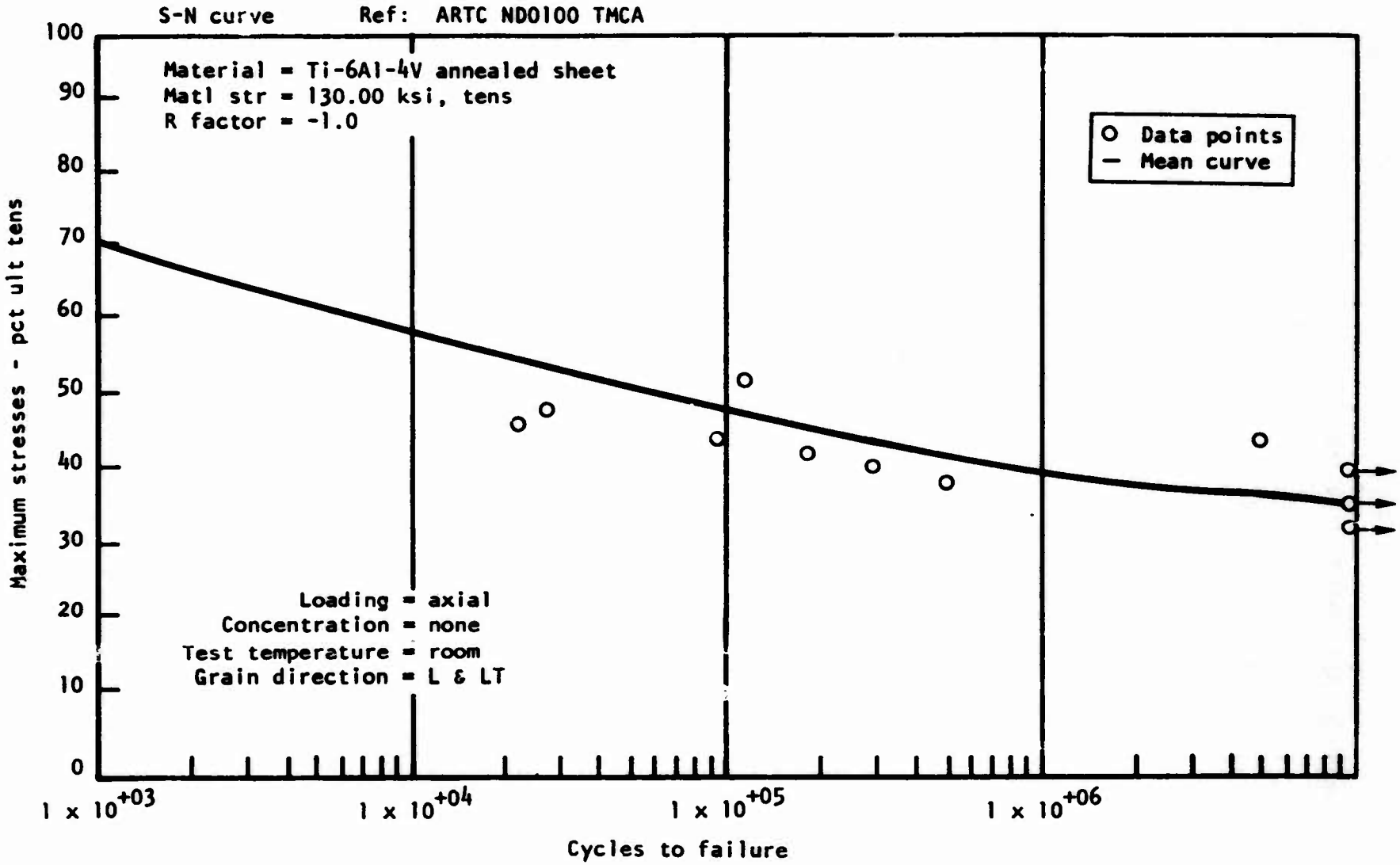

Figure 21. S-N diagram for Ti-6Al-4V annealed sheet.

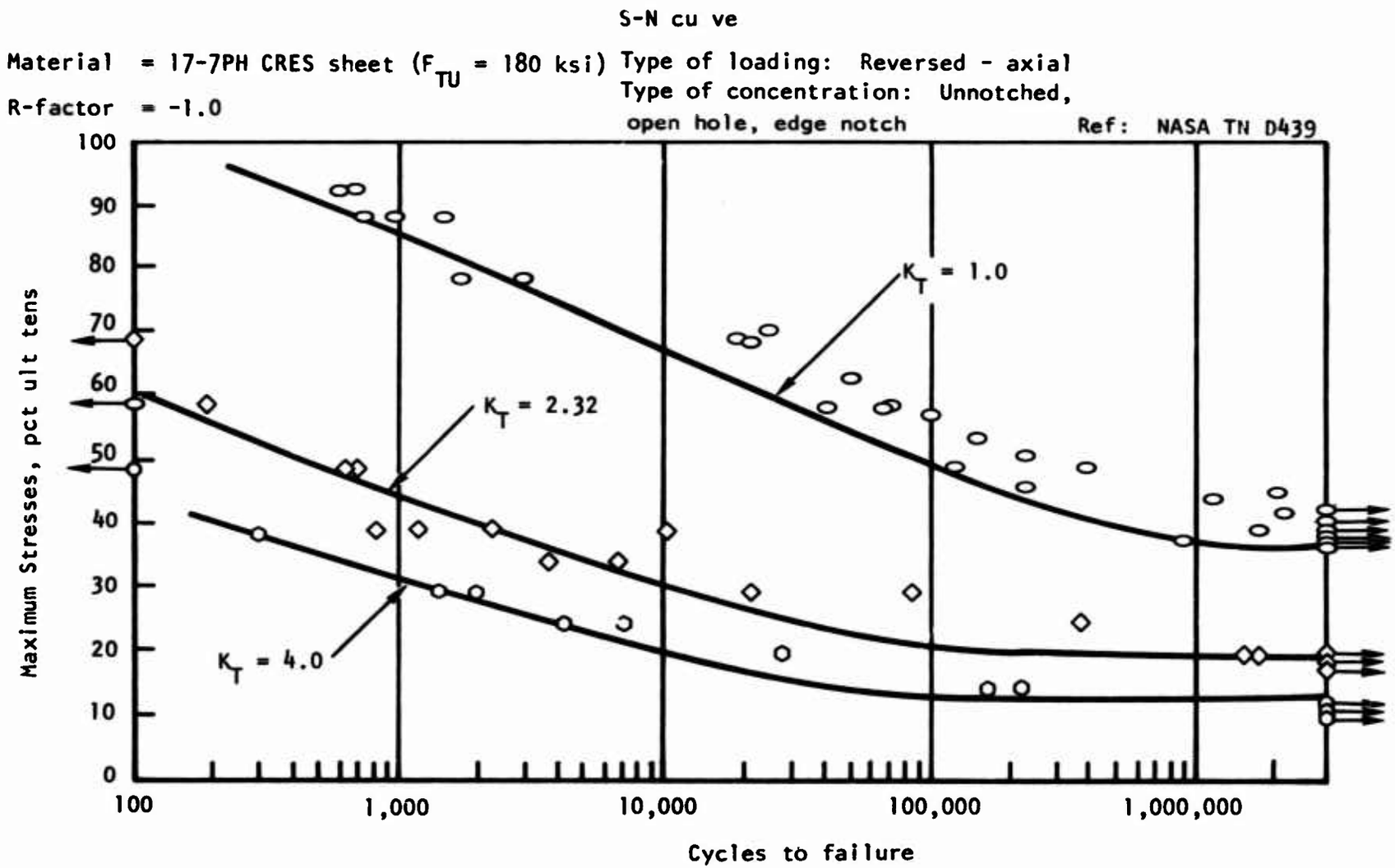

Figure 22. S-N diagram for 17-7PH CRES sheet.

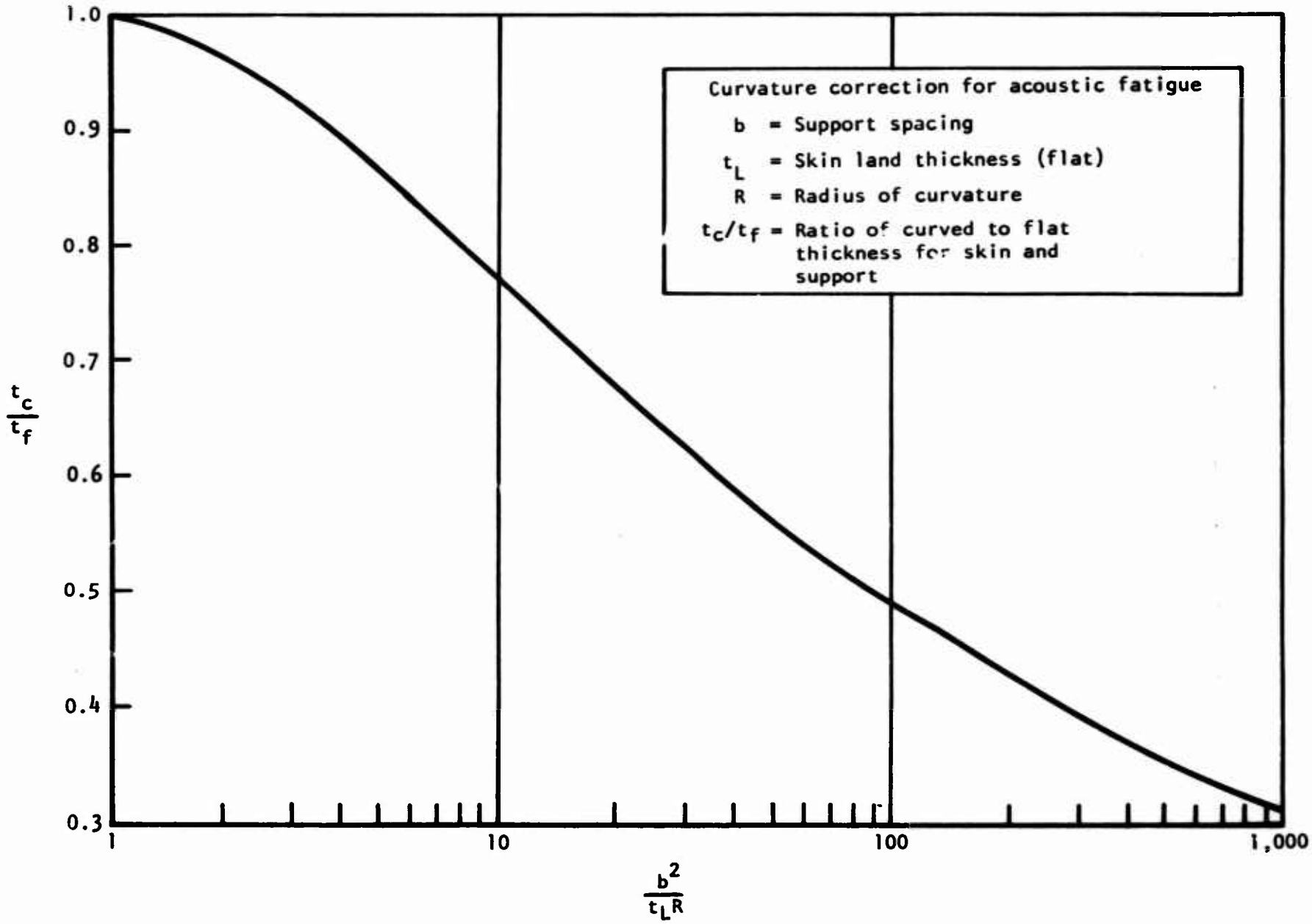

Figure 23. Currative correction for acoustic fatigue.

A summary of some of the assumptions and limitations of this method is as follows:

1. The overall pressure level from jet engine noise is approximately 30 db higher than the random spectrum pressure level.

2. The accuracy of noise intensity prediction is on the order of ±3 db.

3. Beam theory is a satisfactory approach for modeling the shell elements.

4. The design to repetitive pressure intensity from jet engine noise can be correlated to the material endurance limit. Polish specimen s-n data, $K_t = 1$, is a sufficiently representative strength index.

5. The method is based on a limited amount of testing.

6. The method does not consider panel aspect ratio, and is, therefore, conservative when aspect ratios approach 1.

Minor Frames

Subroutine MINFR calculates the minor frame sizing required for general shell stability, acoustic fatigue, and forced crippling due to postbuckled cover design. Methods for sizing to prevent acoustic fatigue are included in the discussion of cover requirements. Initial sizing is set at minimum thickness, which is checked against thicknesses required to satisfy the other criteria.

Minor Frame Model

The minor frames are assumed to be constructed as shown in the following sketch. The geometry variables, frame depth (c) and cap flange width (b), are user input parameters. Thickness is the parameter determined by sizing calculations.

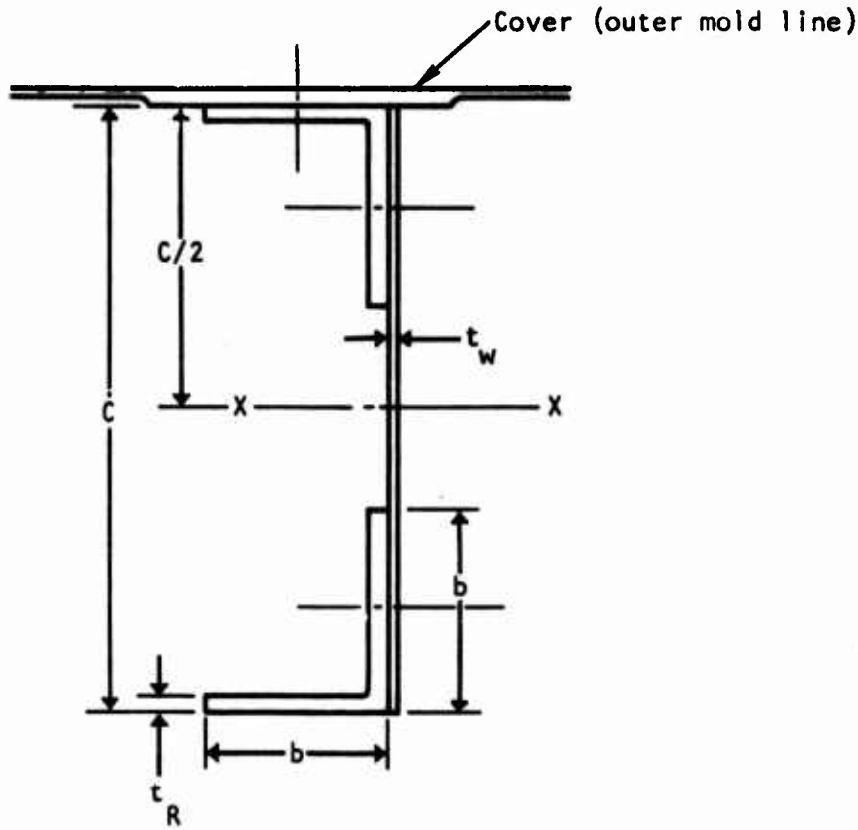

Given the foregoing frame geometry, the ring properties are as follows:

$$\text{Area} = 4\,bt_R + Ct_W$$

$$I_{X-X} = 2\left(\frac{bt_R^{\,3}}{12}\right) + 2\,(bt_R)\left(\frac{C}{2}\right)^2 + 2\left(\frac{bt_R^{\,3}}{12}\right)$$

$$+ 2\,bt_R\left(\frac{C}{2} - \frac{b}{2}\right)^2 + \frac{t_W C^3}{12}$$

$$= t_R\left(bC^2 + \frac{2b^3}{3} - b^2C\right) + t_R^{\,3}\,\frac{b}{6} + \frac{t_W C^3}{12}$$

since $t_R \ll b$

$$I_{X-X} \approx t_R\left(bC^2 + \frac{2b^3}{3} - b^2C\right) + \frac{t_W C^3}{24}$$

If the simplifying assumption $t_W = t_R/2$ is made, the area and inertia equations may be reduced to a function of a single thickness.

$$\text{Area} = A_R = t_R\left(4b + \frac{C}{2}\right)$$

$$I_{X-X} = t_R\left(bC^2 + \frac{2b^3}{3} - b^2C + \frac{C^3}{24}\right)$$

The eccentricity of the ring about the cover is: $e = C/2$.

The radius of gyration of the ring about its neutral axis is:

$$\rho_R = \sqrt{\frac{bC^2 + \frac{2b^3}{3} - b^2C + \frac{C^3}{24}}{4b + \frac{C}{2}}}$$

General Instability

Tests are made to determine the required frame stiffness to prevent general instability failure. Shanley[3] suggests the use of the following equation:

$$C_f = \frac{(EI)_f L}{MD^2}$$

where

C_f = 1/16000

L = frame spacing

M = bending moment at the cut

D = fuselage diameter

Substituting and solving for ring thickness,

$$t_R = \frac{C_f M D^2}{E L \left(bC^2 + \frac{2b^3C}{3} - b^2 + \frac{C^3}{24}\right)}$$

Forced Crippling

Covers on fuselage structures subjected to shear load are allowed to buckle. In the buckled state, these loads are supported by diagonal tension stresses. Axial loads produced by cover tension field are reacted by stiffening elements (minor frames, stringers) that bound the panel. Since shear loads are maximum at the midpoint of the side panel, this condition is evaluated for elements on the side sectors of the shell.

Basic formulations for the prevention of forced crippling failure due to postbuckled design are taken directly from Kuhn(4) and Bruhn(1). These methods have been modified to account for the condition where different materials are selected for cover, longeron, and minor frame design.

Cover sizing is established in subroutine FCOVER to satisfy strength and other criteria. Shear stress based on this thickness is compared against the critical shear stress to determine whether the panel is designed to a postbuckled condition; in which case, postbuckled design is evaluated. At this point in the sizing process, longeron (stringer) area has not been established. The longitudinal member area is required to define panel boundary support constraints. A first approximation is made for longeron area based on vehicle bending loads.

$$F_{cy} = \frac{MZ}{I} = \frac{MZ}{A_S \sum Z^2}$$

$$A_S = \frac{MZ}{F_{cy} \sum Z^2}$$

where

Z = coordinate of the extreme fiber (fuselage half-depth at cut)

$\sum Z^2$ = sum of longeron coordinates squared

F_{cy} = longeron material compression yield stress

On stringer construction fuselages, the side sector stringers, particularly the stringer nearest the horizontal neutral axis is subjected to forced crippling loads. Minimum area is used as the initial estimate for the side stringers.

The degree to which diagonal tension is developed is specified by the fraction K. This fraction is determined by the empirical formula;

$$K = \tanh \left[\left(0.5 + 300 \frac{t_c D}{RC\ L} \right) \log_{10} \frac{f_s}{f_{scr}} \right]$$

with the rules that:

1. If $D/L > 2$, use $D/L = 2$.

2. If $L > D$, replace D/L with L/D.

where

t_c = cover thickness

f_s = cover shear stress

f_{scr} = cover critical buckling stress

D = stringer spacing or distance between longerons ($\approx$ side panel circumferential length)

L = frame spacing

RC = side panel radius of curvature

An initial approximation is made for the diagonal tension angle α. For longeron type construction,

$$\alpha \approx \frac{\pi}{4}$$

For stringer construction, the initial estimate is based on curve fit approximations of Figure 24, from reference 4.

$$\alpha = \alpha_{PDT}\left(\frac{\alpha}{\alpha_{PDT}}\right)$$

where

$$\alpha/\alpha_{PDT} \approx K^{0.250}$$

and

$$\alpha_{PDT} \approx \frac{\frac{\pi}{4} + 0.1443A}{1 + 0.175622A + 0.013411A^2}$$

$$A = \frac{\frac{D}{RC}\sqrt{\frac{E_c}{f_s}}}{\sqrt{1 + \frac{1}{2}\left(\frac{Dt_cE_c}{A_sE_s} + \frac{Lt_cE_c}{A_RE_R}\right)}}$$

where

E_c = cover modulus of elasticity

E_s = stringer modulus of elasticity

E_R = minor frame (ring) modulus of elasticity

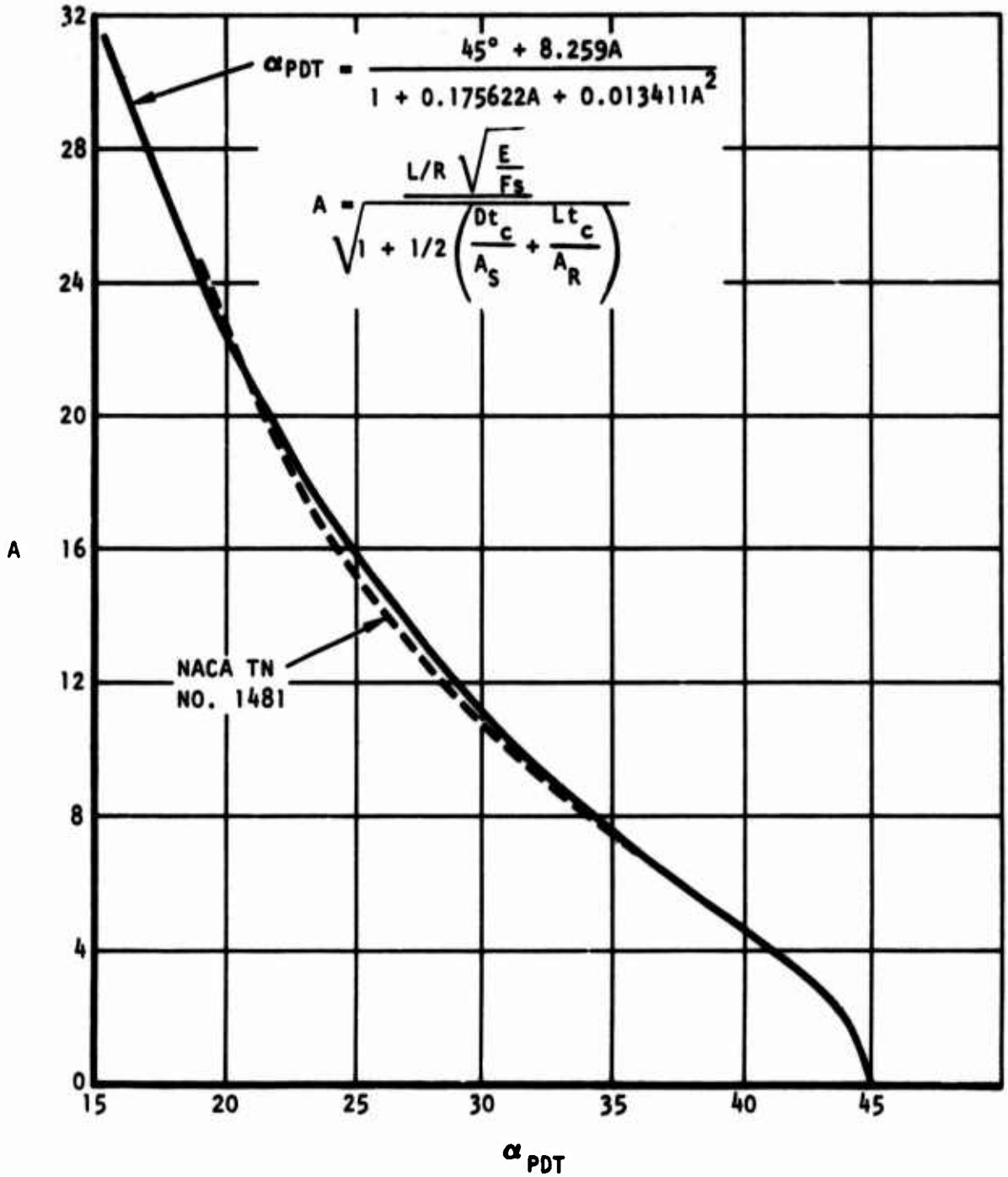

Figure 24. First approximation of the angle of folds.

The modulus of elasticity ratios are included in parameter A to account for material differences. This first approximation for the angle α is the initial value in an iteration procedure that converges on a value for α and A_R.

Total axial load in the ring due to equal shear stresses on both sides of the ring is:

$$P_{RG} = f_s K t_c L \tan \alpha$$

This load is supported equally by the ring and effective cover. Due to eccentricity, the total ring area is not fully effective such that effective ring area is:

$$A_{e_{RG}} = \frac{A_R}{1 + \left(\frac{e}{\rho}\right)^2}$$

where

e = eccentricity of ring about cover

ρ = radius of gyration of ring about its neutral axis

The effective ring and cover area is then

$$A_{e_{DT}} = A_{e_{RG}} + 0.5 L t_c (1-K)$$

However, since cover material can differ from ring material, effective cover area is represented in terms of ring material and

$$A_{e_{DT}} = A_{e_{RG}} + 0.5 L t_c (1-K) \frac{E_c}{E_R}.$$

The stress in the ring is then

$$f_{RG} = \frac{P_{RG}}{A_{e_{DT}}} = \frac{f_s\ K\ t_c\ L \tan \alpha}{A_{e_{RG}} + 0.5\ L\ t_c\ (1-K)\ \frac{E_c}{E_R}} = \frac{f_s\ K \tan \alpha}{\frac{A_{e_{RG}}}{L\ t_c} + 0.5\ (1-K)\ \frac{E_c}{E_R}}$$

Similarly, for stringer construction the stringer stress is

$$f_{ST} = \frac{P_{ST}}{A_{e_{DT}}} = \frac{f_s\ K \cot \alpha}{\frac{A_{e_{ST}}}{D\ t_c} + 0.5\ (1-K)\ \frac{E_c}{E_s}}$$

The foregoing equation is based on the assumption that shear flow is approximately equal across the stringer nearest the horizontal neutral axis. On longeron construction, all of the vertical shear is reacted between the upper and lower longerons such that the shear flow in the upper panel is negligible. In this case, the axial load in the longeron is

$$P_{ST} = f_s\ K\ t_c\ \frac{D}{2} \cot \alpha$$

and the effective material reacting this load is

$$A_{e_{DT}} = A_{e_{ST}} + 0.25\ D\ t_c\ (1-K)\ \frac{E_c}{E_s}$$

The longeron stress is

$$f_{ST} = \frac{P_{ST}}{A_{e_{DT}}} = \frac{f_s\ K \cot \alpha}{\frac{2A_{e_{ST}}}{Dt_c} + 0.5\ (1-K)\ \frac{E_c}{E_s}}$$

Effective stringer area is defined in the same manner as effective frame area

$$A_{e_{ST}} = \frac{A_s}{1 + \left(\frac{e}{\rho}\right)^2}$$

The initial approximation of stringer/longeron area is assumed to be sufficiently representative of the effective area for the sizing procedure in subroutine MINFR. However, the stringer sizing procedure in subroutine FBEND does take into account this effective area.

Strain in the cover ϵ_c, ring ϵ_R, and stringer ϵ_s are defined as

$$\epsilon_c = \frac{f_s}{E_c}\left[\frac{2K}{\sin 2\alpha} + \sin 2\alpha\,(1-K)(1+\mu)\right]$$

$$\epsilon_R = \frac{f_{RG}}{E_R}$$

$$\epsilon_s = \frac{f_{ST}}{E_s}$$

where

μ = Poisson's ratio of cover material

The angle α is related to these strains according to the following equations:

For stringer construction,

$$\tan^2 \alpha = \frac{\epsilon_c - \epsilon_s}{\epsilon_c - \epsilon_R + \frac{1}{24}\left(\frac{D}{RC}\right)^2}$$

for longeron construction,

$$\tan^2 \alpha = \frac{\epsilon_c - \epsilon_s}{\epsilon_c - \epsilon_R + \frac{1}{8}\left(\frac{L}{RC}\right)^2 \tan^2 \alpha}$$

Since the equations for loads, stress, and strain are interdependent, the initial estimate for the diagonal tension angle is used to obtain a new approximation. Three iterations are assumed to be adequate to converge on the angle α. This angle can then be used to determine ring requirements.

The previous equation for ring stress gives an average value; to evaluate the ring requirements, the maximum induced stress is required. Figure 25[4] provides plots of maximum stress versus average stress for different panel aspect ratios and degrees of diagonal tension. The mathematical approximation of these design curves is

when $L/D \leq 1.2$,

$$\frac{f_{RG\ MAX}}{f_{RG}} = 1.0 + 0.78\ (1-K) - 0.65\ \frac{L}{D}\ (1-K)$$

and when $L/D > 1.2$,

$$\frac{f_{RG\ MAX}}{f_{RG}} = 1.0$$

The maximum ring stress is then

$$f_{RG\ MAX} = \left(\frac{f_{RG\ MAX}}{f_{RG}}\right) f_{RG}$$

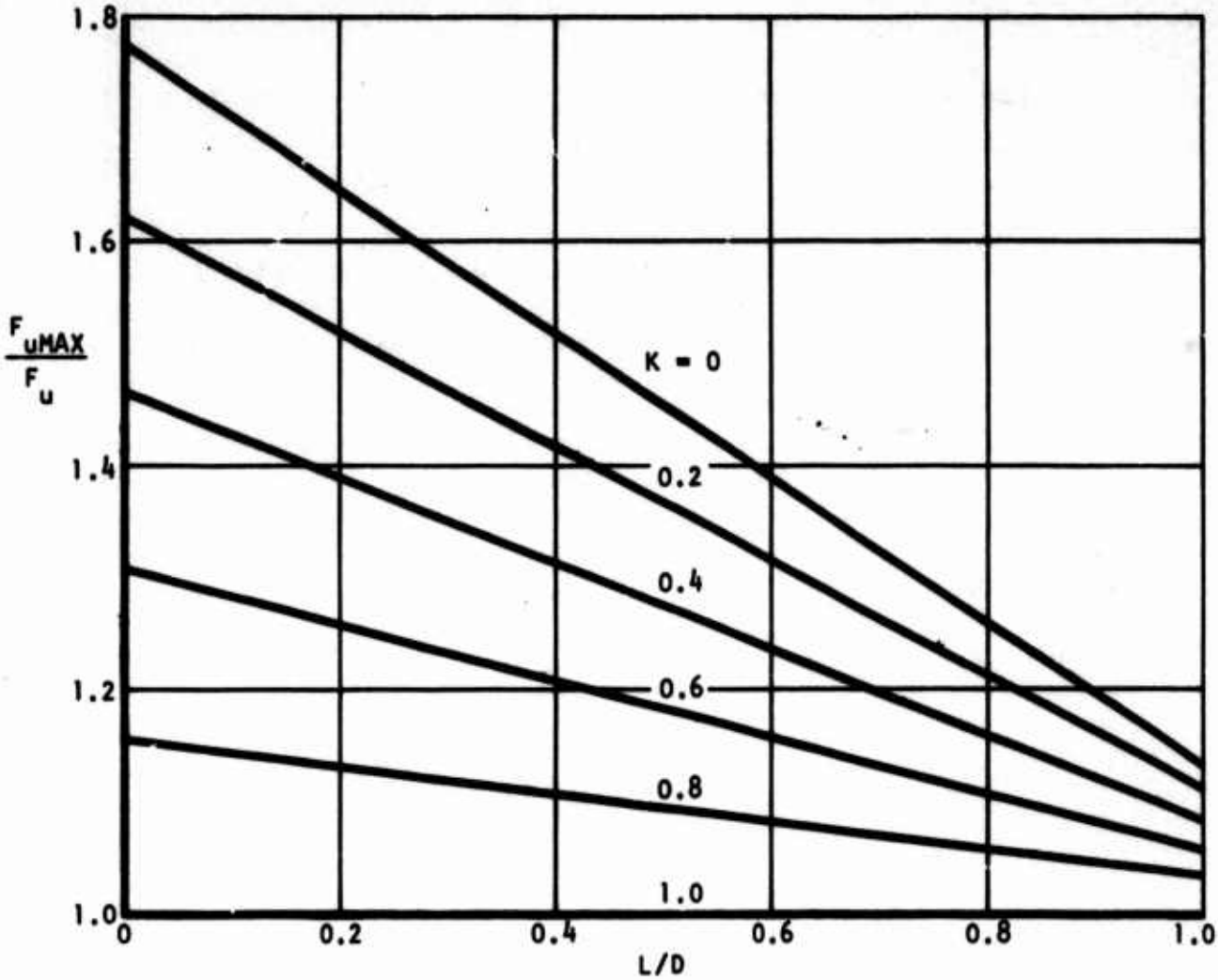

$$\frac{F_{uMAX}}{F_u} = 1.0 + 0.78\ (1-K) - 0.650\ L/D\ (1-K)$$

Where $L/D \leq 1.2$

$$\frac{F_{uMAX}}{F_u} = 1.0$$

Where $L/D > 1.2$

When F_u refers to rings

L = frame spacing
D = stringer spacing or distance between longerons

Figure 25. Maximum stress versus average stress for stiffeners.

Shear wrinkles in the cover tend to buckle the ring leg attached to the cover which, in turn, induces buckling in the outstanding leg. Allowable ring stress for this failure mode (forced crippling) is presented as a series of design curves (Figure 26) and a material property constant. In order to apply these curves to constructions with dissimilar isotropic materials, plate flexural rigidity is considered.

$$\text{flexural rigidity} = Et^3$$

The mathematical approximation of the design curves which includes the effects of material differences is

when $0 < RC \leq 151.586$,

$$N = (18695 + 75.238\ RC)\ K^{2/3} \left(\frac{t_R}{t_c}\right)^{1/3} \left(\frac{E_R}{E_c}\right)^{1/9} = A\ K^{2/3} \left(\frac{t_R}{t_c}\right)^{1/3}$$

and when $RC > 151.586$,

$$N = 30100\ K^{2/3} \left(\frac{t_R}{t_c}\right)^{1/3} \left(\frac{E_R}{E_c}\right)^{1/9} = A\ K^{2/3} \left(\frac{t_R}{t_c}\right)^{1/3}$$

The allowable ring stress is

$$f_{RC_{Allow}} = NG = A\ K^{2/3} \left(\frac{t_R}{t_c}\right)^{1/3} G$$

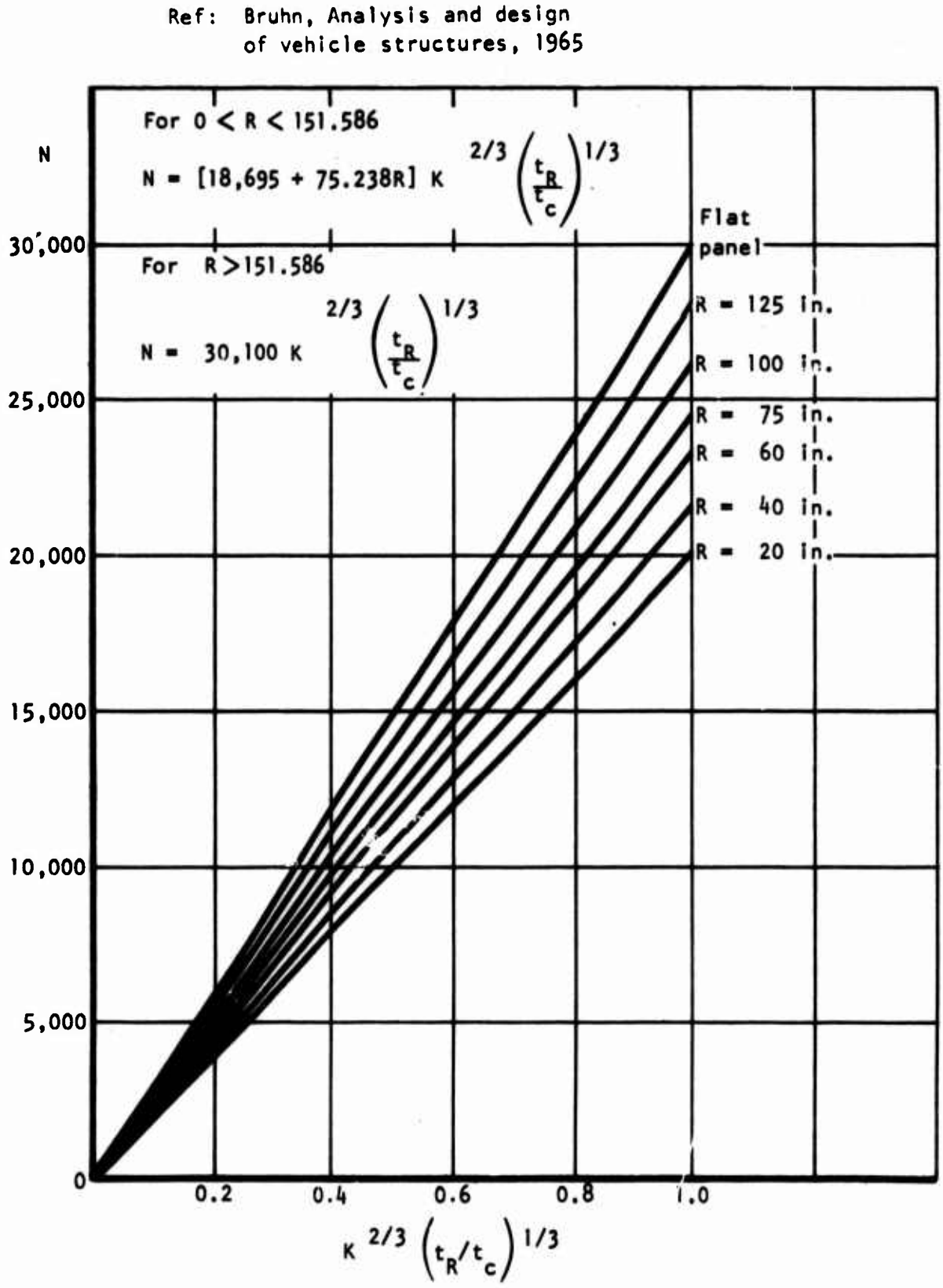

Figure 26. Allowable stiffener stress factor.

where

$$G = \frac{F_{cy} \times 10^{-5}}{5.88\left(\frac{F_{cy}}{E_R} + 0.002\right)^{1/2}}$$

F_{cy} = Ring material compression yield stress.

If H = AG, and equating the allowable stress to the maximum ring stress,

$$F_{RG\ Allow} = F_{RG\ MAX}$$

$$H\ K^{2/3}\left(\frac{t_R}{t_c}\right)^{1/3} = \left(\frac{F_{RG\ MAX}}{F_{RG}}\right)\frac{K\ f_s \tan\alpha}{\dfrac{t_R\left(4b + \frac{c}{2}\right)}{\left[1 + \left(\frac{e}{\rho}\right)^2\right] L\ t_c} + 0.5\ (1-k)\ \dfrac{E_c}{E_R}}$$

If

$$X_a = \left[\left(\frac{f_s \tan\alpha}{H}\right)\left(\frac{F_{RG\ MAX}}{F_{RG}}\right)\right]^3 t_c\ K$$

$$X_b = \frac{\left(4b + \frac{c}{2}\right)}{\left[1 + \left(\frac{e}{\rho}\right)^2\right] Lt_c}$$

$$X_c = 0.5\ (1-K)\ \frac{E_c}{E_R}$$

The equation may be written in terms of ring thickness

$$X_a = t_R \left(t_R X_b + X_c\right)^3$$

or

$$t_R \left(t_R X_b + X_c\right)^3 - X_a = 0$$

The solution for ring thickness can then be obtained by the use of Newton's method of iteration,

$$\partial t_R = 3 X_b t_R \left(t_R X_b + X_c\right)^2 + \left(t_R X_b + X_c\right)^3$$

and

$$t_{R2} = t_{R1} - \frac{t_{R1} \left(t_{R1} X_b + X_c\right)^3 - X_a}{3 X_b t_{R1} \left(t_{R1} X_b + X_c\right)^2 + \left(t_{R1} X_b + X_c\right)^3}$$

where

t_{R1} = initial approximation of ring thickness

t_{R2} = iterated value for ring thickness

When the difference $|t_{R2} - t_{R1}|$ has converged sufficiently, the resultant thickness may be tested against that dictated by minimums or general shell stability. If this value is greater than the initial thickness value, the new frame area is used to determine a new value for α, and the procedure is repeated.

The foregoing procedure is repeated for the longeron to determine the induced compressive load. The procedure uses the values of t_R, α, and K determined in the ring solution.

Longerons, Stringers

The longitudinal member sizing is determined in subroutine FBEND to satisfy minimum area, forced crippling, bending strength, and stiffness requirements. This method accounts for the differences in cover, longeron, and minor frame materials, and the effects of cutouts.

Longeron Model

The longitudinal member model shown in the following sketch is used in the evaluation of forced crippling loads due to postbuckled cover design. Stiffener (longeron) geometry is set up with flange width equal to web height. The programmed default value for height is 0.875 inch. This may be overridden by user input.

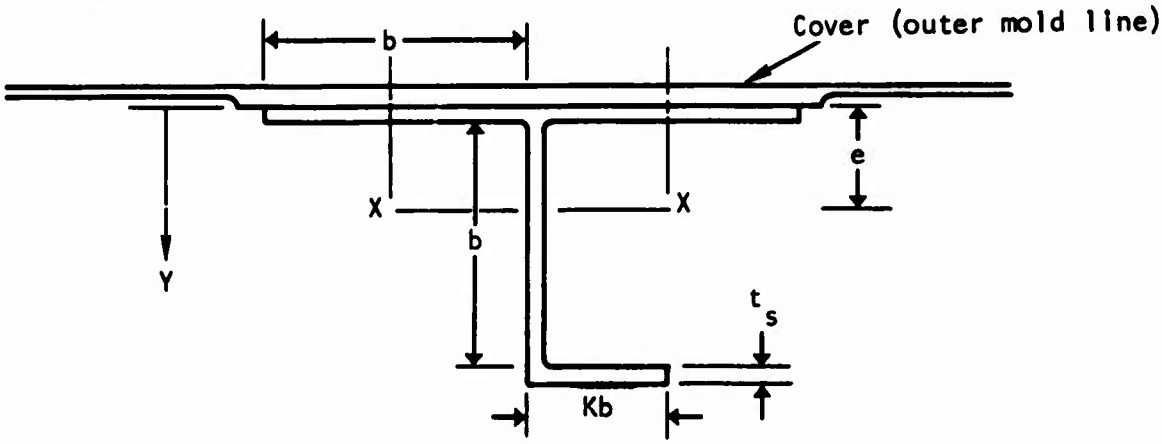

$$\text{Area} = A_S = t_S\,(3b + Kb) = t_S b\,(3 + K)$$

$$A_S\,Y = t_S b\,\frac{b}{2} + t_S bKb = t_S b^2\,(0.5 + K)$$

$$e = b\left(\frac{0.5 + K}{3 + K}\right)$$

$$I_{X-X} = 2t_S be^2 + \frac{t_S b^3}{12} + t_S b\left(\frac{b}{2} - e\right)^2 + t_S Kb\,(b - e)^2$$

$$= t_S b\left[2e^2 + \frac{b^2}{12} + \left(\frac{b}{2} - e\right)^2 + K\,(b - e)^2\right]$$

$$\rho_S = \sqrt{\frac{I_{X-X}}{A_S}}$$

$$A_{e_{ST}} = \frac{A_S}{1 + (e/\rho)^2}$$

Forced Crippling

Induced compressive loads from postbuckled shear panels are calculated by the procedures discussed for minor frame forced crippling design. Since minor frame sizing precedes longitudinal member sizing, the following information is available.

t_c = cover thickness

f_s = cover shear stresss

f_{scr} = cover critical crippling stress

K = degree to which diagonal tension is developed

α = diagonal tension angle

The stress, as previously defined for stringer construction, is

$$f_{ST} = \frac{f_s \, K \cot \alpha}{\frac{A_{e_{ST}}}{D \, t_c} + 0.5 \, (1-K) \, \frac{E_c}{E_s}}$$

and, for longeron construction,

$$f_{ST} = \frac{f_s \, K \cot \alpha}{\frac{2 \, A_{e_{ST}}}{D \, t_c} + 0.5 \, (1-K) \, \frac{E_c}{E_s}}$$

where

D = stringer spacing or distance between longerons

E_c = cover material modulus of elasticity

E_s = longeron material modulus of elasticity

Sizing to allowable stress is accomplished by the iteration procedure described for minor frames. The maximum induced axial compressive load can then be obtained.

$$P_{max} = \left(f_{ST_{MAX}}\right)\left(A_s\right)$$

Stringers on the side sector are sized to satisfy this condition. Stringers on the upper and lower sectors are not affected since this load is based on shear at the midpoint of the side panel. For longeron construction, the shear flow is nearly constant between the upper and lower longerons; the compressive load is reacted by the longerons.

Bending Strength

Longitudinal member sizing is dependent on the contribution of all components that resist bending loads. This method accounts for the difference in behavior of cover elements under tension load versus the behavior in compression. Cover material, should it differ from longeron material, can also have different strength and elastic properties.

The assumption that plane sections remain plane simplifies the estimating approach. The practice of using a margin of safety of 1.5 in analysis and metal deformation characteristics results in stresses at limit load occurring in the elastic range.

The stress at any point on the shell is then proportional to the extreme fiber stress according to the relationship of vertical coordinate versus extreme fiber coordinate. The maximum allowable extreme fiber stress for the longeron and covers are established as follows:

Longeron = σ_{max_ℓ} = 0.9 Fcy (long)

Cover = σ_{max_c} = 0.76 Ftu (cover)

The cover limit is set to account for the presence of rivet holes. The extreme fiber stress for longeron material is established as previously noted. Due to elastic behavior differences, the cover stress at the same strain is determined by the ratio of modulus of elasticity.

$$\sigma_{max_c} = \sigma_{max_\ell}\left(\frac{E_c}{E_L}\right)$$

Should this maximum cover stress exceed the allowable for the cover, the limiting factor is cover stress, and the maximum longeron stress is modified according to the strain relationships.

Bending moment is assumed to be reacted by an internal coupled force system. Thus, in the case of down-bending, the upper half of the shell sustains tension loads and the lower half, compression loads; half of the moment is reacted in each half. The discussions that follow are indicative of the down-bending synthesis. Up-bending is investigated by using the same approach with the exception of a reversal of loads in the elements.

The cover is totally effective in the tension sector of the fuselage. Cutouts eliminate cover contribution; proximity to cutouts degrade the effectiveness of covers. The width of cutouts at other synthesis cuts combined with the longitudinal displacement and a shear lag slope of 2 to 1 is used to determine the apparent effective width. The moment reacted by the upper cover in tension is:

$$M_c = \Sigma\sigma_i Z\, t ds = \frac{t\,\sigma_{max_c}}{d/2}\,\Sigma Z^2 ds = t\left(\frac{\sigma_{max_c}}{d/2}\right)\left(\frac{I}{t}\right)_v\left(\frac{BU - RTU}{BU}\right)$$

where

d = fuselage depth

$(I/t)_v$ = cover moment of inertia as a function of thickness

BU = upper panel peripheral length

RTU = apparent panel degradation due to proximity of cutout

The side cover panel contribution to bending is considered to be insignificant. The moment reacted by the upper half of the side panel stringers, sizing for which is determined by induced compressive load or minimum area, is:

$$M_s = \Sigma \sigma_i Z A_s = \frac{A_s \sigma_{max_\ell}}{d/2} \Sigma Z^2 = \frac{A_s \sigma_{max_\ell}}{d/2} \left(\frac{I}{A_s}\right)_v$$

where

$(I/A_s)_v$ = side stringer moment of inertia as a function of area

The moment reacted by secondary longitudinal members (M_{SL}) is calculated in the same manner as used for side stringers.

The moment to be resisted by the primary longerons or upper stringers is then the difference between the total moment and that resisted by the cover, side stringers, and secondary longerons.

$$M_L = \frac{M_{EXT}}{2} - M_c - M_s - M_{SL}$$

The longeron or stringer area (A_L) to resist this moment is then determined as follows:

$$M_L = \frac{A_L \sigma_{max}}{d/2} \left(\frac{I}{A_L}\right)_v$$

$$A_L = \frac{M_L \, d/2}{\sigma_{max_\ell} \left(\frac{I}{A_L}\right)_v}$$

For stringer construction in the presence of cutouts, some of the stringers are not present or are not effective. The moment that these stringers should have reacted are assumed to be resisted by cutout longerons which bound the cutout. These elements are located at the lateral edge of the cutout. The moment to be resisted by these longerons are

$$M_{co} = M_L \left(\frac{RTU}{BU}\right)$$

and the area of these elements is:

$$A_{co} = \frac{M_{co}\ d/2}{\sigma_{max_\ell}\ 2(Z)^2}$$

where

Z = vertical coordinate of cutout longeron

The compression sector synthesis is similar to the tension sector evaluation. One major difference is the effectiveness of the cover in compression. Peery[5] suggests the use of the following equation for determining the critical buckling stress for thin-walled curved sections.

$$F_{CCR} = \left[9\left(\frac{t}{R}\right)^{5/3} + 0.16\left(\frac{t}{L}\right)^{1.3} + \frac{K_c\,\pi^2}{12(1-\mu^2)}\left(\frac{t}{b}\right)^2\right] E$$

If the critical stress calculated by the foregoing equation is greater than the maximum allowable cover stress, the compression cover is totally effective. The moment carried by the cover is then calculated in the same manner as used for the tension cover. A critical stress less than the allowable cover stress indicates a buckled sheet. In this instance, Peery suggests the following approximation for effective cover width at each stringer or longeron:

$$\omega = 1.7\ t\sqrt{\frac{E_c}{F_{CCR}}}$$

For stringer construction, this width is tested against stringer spacing which is not to be exceeded. The effective area of cover can then be assumed to be located at the stringer coordinates. The moment carried by the cover is then equal to:

$$M_C = \frac{t\,\omega\,\sigma_{max_c}}{d/2}\left(\frac{I}{A_L}\right)_v$$

Should cutouts affect the stringers, the equation takes the following form:

$$M_C = \frac{t\,\omega\,\sigma_{max_c}}{d/2}\left(\frac{I}{A_L}\right)_v\left(\frac{BL-RTL}{BL}\right)$$

where

BL = lower panel peripheral length

RTL = apparent panel degradation due to proximity of cutout

For longeron construction, another difference is evaluated. The induced compressive load due to postbuckled shear panels is combined with the axial load due to bending. Should the stress level due to the combined loads be greater than 0.9 Fcy, the synthesized area is revised to satisfy this constraint.

Bending Stiffness

Bending stiffness of fuselages is both load and direction dependent. Fuselage shell structures, unlike lifting surfaces, are designed to post-buckled strength, such that stiffness is dependent on the condition of the structure under load. Stiffness is highest under low load, and decreases as structure goes into the buckled state. Up-bending stiffness is usually less than down-bending stiffness due to the greater number of holes in the lower fuselage. The method taken in assessing bending stiffness requirements is to assume the buckled state.

The down-bending stiffness of the synthesized structure is tested against vertical bending stiffness requirements. For longeron construction, incremental stiffness is provided equally by the upper and lower longerons. The stringers in the upper and lower sectors are treated in the same manner. Should cutouts or their effects exist in the upper or lower sectors, the incremental stiffness required is provided by the cutout longerons rather than the stringers.

Side-bending stiffness is tested after vertical bending stiffness has been evaluated. For longeron construction, the incremental stiffness is provided equally by the upper and lower longerons. Side stringers provide the additional stiffness for stringer construction fuselages.

Bulkheads

Pressure bulkheads are located at structural synthesis cuts by user determined input. Design parameters for these bulkheads are determined in subroutine BLKHDS which calls subroutine DBLKHD to calculate the structural sizing. Assumptions used in this approach are:

1. Construction is stiffened sheet design simply supported around the periphery

2. Strip theory provides an adequate definition of maximum bending moment.

3. Stiffeners are of constant cross section based on the maximum bending moment, at equal spacings, and oriented parallel to the shortest bulkhead dimension.

4. Web thickness based on maximum pressure is constant throughout the bulkhead surface.

5. Minor frame material is used for bulkhead construction.

Geometry

Geometric parameters are calculated in subroutine GJ1GEO by methods described in the internal geometry discussions. Data provided by subroutine GJ1GEO are:

ANTF, ANTA Surface area of bulkhead enclosing compartments forward and aft of the cut, respectively.

PERF, PERA Peripheral edge of bulkhead immediately forward and aft of the cut.

PRDF, PRDA Peripheral edge of bulkhead at juncture with decks or shrouds immediately forward and aft of cut.

DEPF, DEPA Vertical beaming distance between bulkhead edges.

WIDF, WIDA Lateral beaming distance between bulkhead edges.

Bulkheads may encompass the total cross section at the cut, that part of the section above a deck, or that part below a deck. These bulkheads can also serve the purpose of separating two pressurized compartments.

Pressure and Design Criteria

Pressure may result from cabin pressurization or fuel (hydraulic) head. The types of pressure loading that can be encountered are shown in the following sketch.

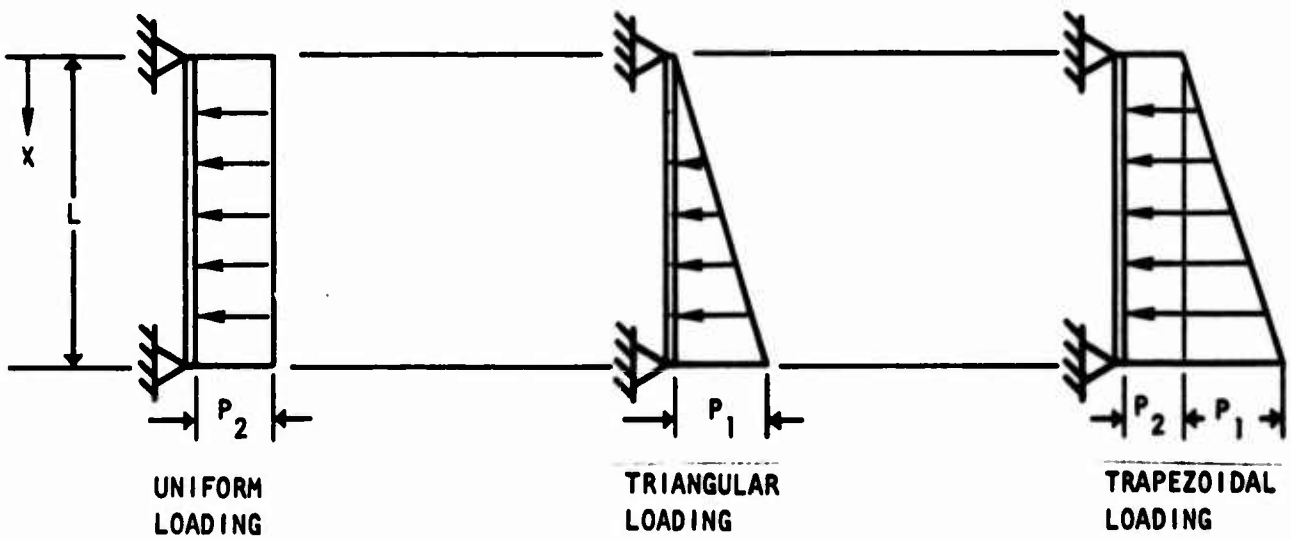

Uniform loading occurs from cabin or equipment compartment pressurization. If the source is due to cabin pressure (personnel environment), the limit to ultimate design factor is 2.0. For equipment compartment pressure, the factor is 1.5. When the bulkhead is designed for either loading, the allowable stress may be limited by fatigue. Design tensile stress under limit load is the minimum value of:

1. $f_t = \dfrac{F_{TU}}{\text{limit to ultimate factor}}$

2. $f_t = K_R F_{TU}$

where

F_{TU} = material ultimate tensile strength

K_R = reduction in allowable due to fatigue

Triangular loadings occur from fuel head. Trapezoidal loadings result from the combination of fuel head and vent pressure. Fuel pressure results from vehicle maneuver such that both positive and negative maneuver load factor conditions are examined.

Subroutine DBLKHD is called to calculate sizing to these design parameters. In the case of fuel loading, sizing for minimum gage, pressure from maximum positive load factor, and pressure from maximum negative load factor are compared to determine the design condition. Should the bulkhead separate two pressurized compartments, sizing is determined by evaluating each loading separately while assuming that the other is nonexistent.

Synthesis

Bending moment per unit width for the pressure loading is

$$M = \frac{P_2 LX}{2} - \frac{P_2 X^2}{2} + \frac{P_1 LX}{6} - \frac{P_1 X^3}{6L}$$

The solution for X that determines the maximum moment is

$$X = \frac{-L P_2 + L \sqrt{P_2^2 + P_2 P_1 + \frac{P_1^2}{3}}}{P_1}$$

If K is used to represent the value of X obtained from the binomial solution in the following manner,

$$K = X/L$$

and is substituted into the moment equation, the maximum moment is

$$M_{max} = P_2 L^2 \left(\frac{K - K^2}{2}\right) + P_1 L^2 \left(\frac{K - K^3}{6}\right)$$

The model of the assumed structure is shown in the following sketch

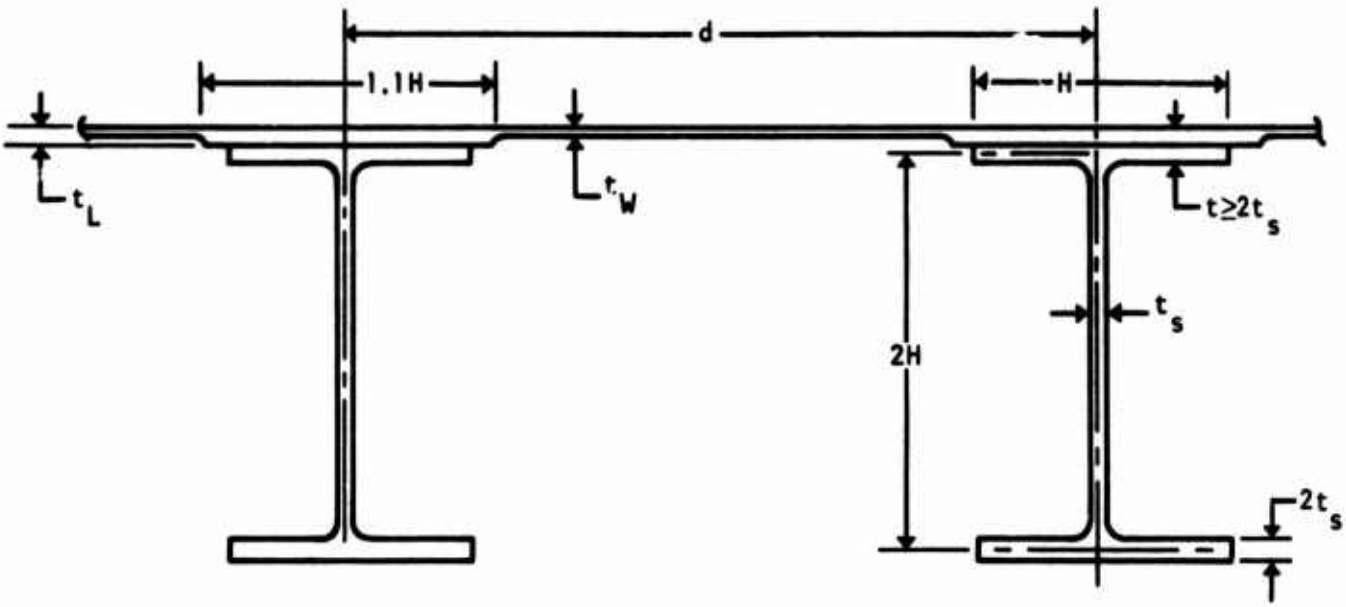

Area and inertia of the stiffener including effective skin are:

$$A = 4\, t_s\, H + 2\, t_s\, H = 6\, t_s\, H$$

$$I = 4\, t_s\, H^3 + \frac{2}{3}\, t_s\, H^3 = \frac{14}{3}\, t_s\, H^3$$

Second-order terms of thickness are assumed to be negligible in the inertia calculation.

The sizing approach searches on stiffener spacing for minimum effective thickness within the following constraints.

$$2 \le d \le 12$$

$$1 \le H \le 5$$

$$0.025 \le t_s$$

$$0.025 \le t\omega \ge t_L/2.5$$

All of the foregoing constraints can be controlled by user input parameters. Stiffener spacing search is initiated at minimum spacing (2 inches) and continued at fixed increments where three values of effective thickness are obtained. A three-point curve fit solution is used to determine optimum spacing.

Web sizing is based on combined bending and diaphragm action between stiffeners. Webs are assumed to be milled between supports. Thicknesses are derived by the curve-fit approximation of theoretical plots (Figure 13) presented in the discussions of cover pressure design.

$$t\omega = \frac{1.3769\ d\left(P_1 + P_2\right)^{2.484}\ E^{0.394}}{f_t^{\ 4.467}}$$

$$t_L = \frac{1.646\ d\left(P_1 + P_2\right)^{0.894}\ E^{1.984}}{f_t^{\ 1.288}}$$

Stiffener sizing is based on defining a geometry that satisfies flange crippling at compression yield stress. The flange crippling equation is:

$$f_{cc} = C_e \sqrt{Fcy\ E}\left(\frac{t}{b}\right)^{3/4}$$

where

$b = H/2$

$t = 2t_s$

E = modulus of elasticity

Fcy = compression yield stress

C_e = 0.312, flange crippling coefficient for one edge free

Equating crippling stress to yield stress

$$f_{cc} = Fcy = C_e \sqrt{Fcy\ E} \left(\frac{4t_s}{H}\right)^{3/4}$$

and letting

$$B = \frac{Fcy}{C_e \sqrt{Fcy\ E}}$$

$$H = \frac{4t_s}{B^{4/3}}$$

Having established the relationship between flange width and thickness, the actual stiffener, sizing can be determined. Flange stress in bending is

$$Fcy = \frac{My}{I} = \frac{MH}{\frac{14}{3}\ t_s H^3} = \frac{3M}{14 t_s H^2}$$

Substituting for H and solving for thickness,

$$Fcy = \frac{3MB^{8/3}}{224\ t_s^{\ 3}}$$

$$t_s = \left(\frac{3MB^{8/3}}{224Fcy}\right)^{1/3}$$

and, as defined initially,

$$H = \frac{4t_s}{B^{4/3}}$$

In the case where the design is within all constraints, the equivalent thickness is

$$\bar{t} = t\omega + \frac{1.1\ H(t_L - t\omega)}{d} + \frac{4Ht_s + H(2t_s - t_L)}{d}$$

This procedure is repeated for three different spacings to determine the optimum; then a final pass is made using the optimum spacing (d).

Weight

The weight of the bulkhead is then obtained by multiplying area, effective thickness, and material density. An edge member in the form of an angle with 1.5-inch legs and the thickness equal to the equivalent thickness is also added to the weight calculation.

Major Frames

Major frames are sized to edistribute loads from external components supported by the fuselage. These loads are calculated and stored by subroutine FLDDT for use by the frame evaluation routines.

Frame weight estimating procedure consists of determining the external forces, defining the geometry, calculating the internal ring loads, sizing the ring elements, and then calculating weight. These operations are organized in the following grouping of subroutines:

1. FFRME — Controls the frame weight estimating process by organizing load data and calling the geometry and internal load routines to calculate sizing and weight.

2. FRMND1 — Calculates the coordinates of synthesis cuts around the periphery of the frame.

3. FRMLD — Calculates the internal loads at the midpoint of each ring segment.

4. SFOAWE — Calculates sizing at each ring segment based on loads and ring weight from this sizing.

Fifteen different frames may exist on a given configuration. Presence of these frames are indicated by the actual fuselage stations at which they occur. Should loads from different sources be specified at the same station, they are combined to form a composite loading on a single frame. Loads from three different sources may be introduced on a single frame as may occur if the landing gear, wing, and nacelle were supported at the same fuselage station. Loads from external components are provided in pairs of left and right side loads. Therefore, three sets of loads may be introduced at six different points on the ring. These load sets, in the form of vertical loads, lateral loads, and bending moment, are calculated for each vehicle design condition. Magnitude and direction variations of these loads are such that parts of the ring may be designed by different load conditions.

The elastic center method[1] is used to derive internal ring loads at as many as 60 peripheral segments. In this approach, ring distortions due to axial and shear forces are neglected, based on the premise that these distortions are small compared to bending distortions. Another assumption is that unbalanced external forces are reacted by a continuous outer cover. Iteration on internal loads, sizing, and flexibility are not included in this approach. Computer central core time for a typical fuselage run is approximately 12 seconds; frame evaluation without any iteration on flexibility accounts for 85 percent of this time to estimate approximately 15 percent of the fuselage weight. Refinement provided by iteration cycles would not be commensurate with the overall estimating philosophy.

Geometry

Shell geometry at the frame station is determined by interpolating between shell synthesis cut geometric data. This geometry defines the outer cap contour as well as the cover shear path. The contour data is then used to determine the coordinates of the synthesis cuts. Cuts are located at equal angular displacements about the axes of symmetry with the first and last cut at the top centerline of the ring. Since ring structure is within the mold line, the neutral axis is then defined to be inward a distance equal to half the frame depth. In the following sketch and discussions, the subscript i designates a cut, j designates a segment, and jj the total number of segments. The program divides the periphery of the frame into segments of equal length (DLS_j).

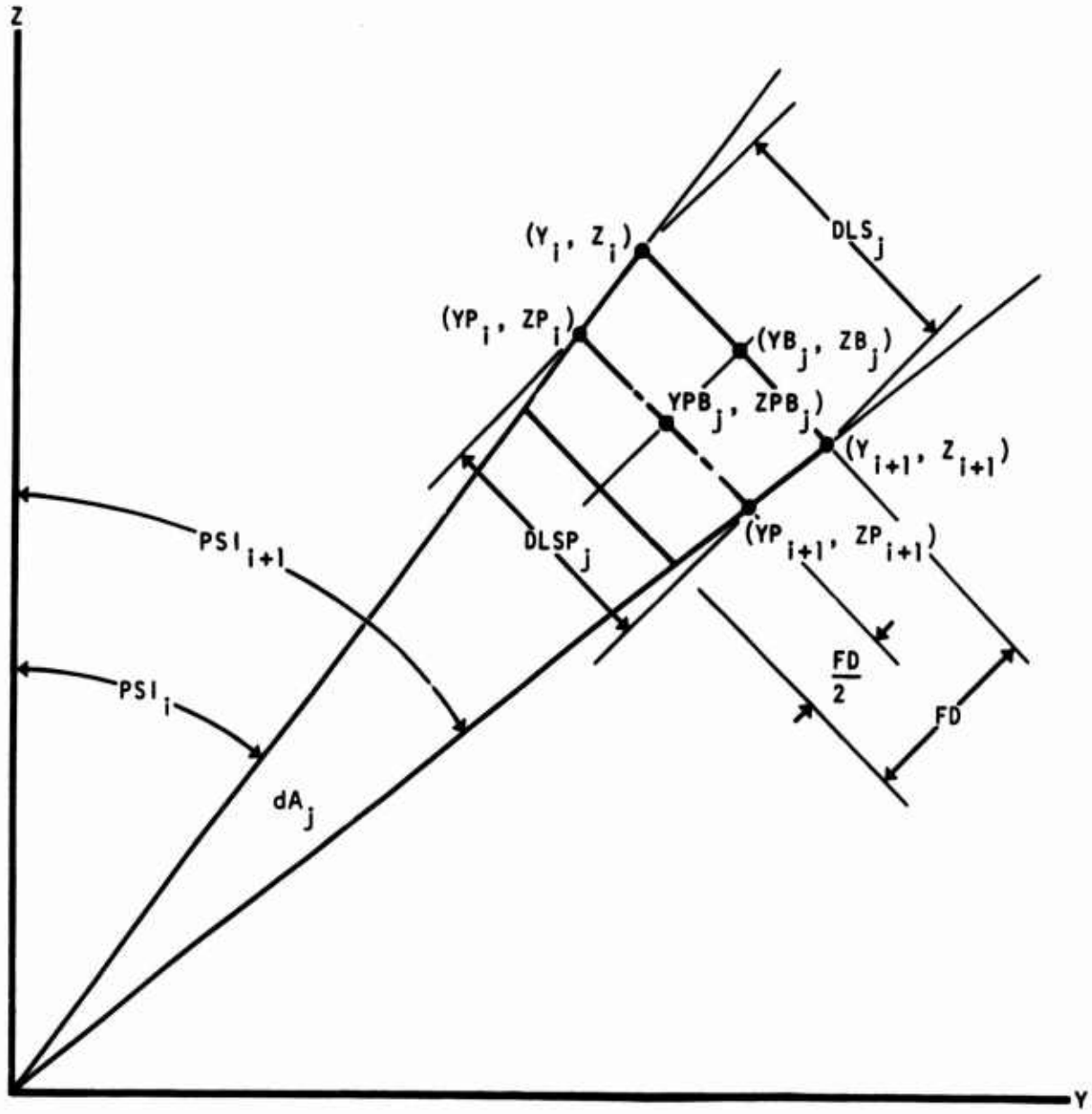

Perimeter of the outer cap (P), perimeter of the ring (PP), and the enclosed area (AREA) are calculated by the following summations

$$P = \sum DLS_j$$

$$PP = \sum DLSP_j$$

$$dA_j = \left| \frac{(Y_{i+1})\ (Z_i)}{2} - \frac{(Y_i)\ (Z_{i+1})}{2} \right|$$

$$AREA = \sum dA_j$$

For most fuselage rings, the Z-axis is the axis of symmetry for both ring geometry and flexibility. Therefore, the rigid arm in the elastic center method is assumed to be attached to the top centerline of the ring. The positive sign convention and location of redundants, external forces, and shear flow are shown in the following sketch.

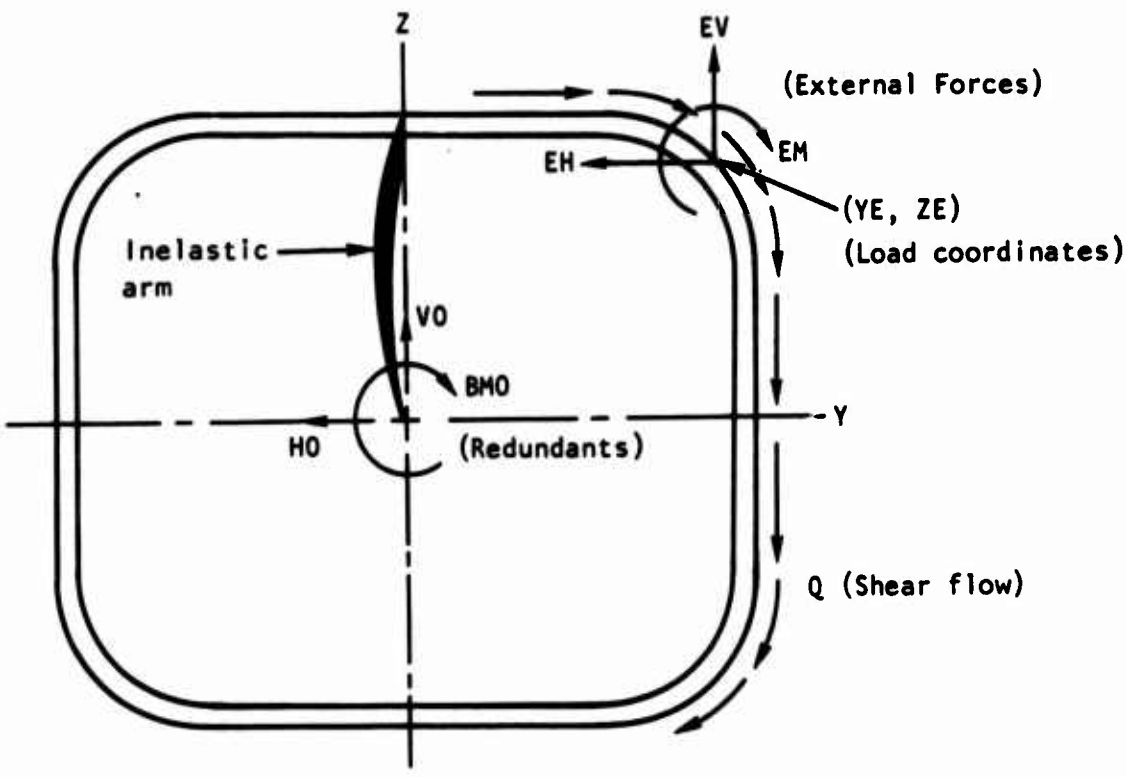

Since one of the assumptions is that frame flexibility is constant, unity may be used for stiffness (Ij), and the elastic center and the geometric neutral axis are identical. The elastic center (ZZF) is determined by:

$$ZZF = \frac{\sum \frac{ZPB_j \; DLSP_j}{I_j}}{\sum \frac{DLSP_j}{I_j}} = \frac{\Sigma ZB_j \; DLS_j}{\Sigma DLS_j}$$

The section inertia about the two reference axes are:

$$IOZ_s = \Sigma YB_j^2 \; DLS_j$$

$$IOY_s = \Sigma \left(ZB_j - ZZF \right)^2 \; DLS_j$$

$$IOZ_F = \Sigma YPB_j^2 \; DLSP_j$$

$$IOY_F = \Sigma \left(ZPB_j - ZZF \right)^2 \; DLSP_j$$

The subscripts s and F are used to designate shell and frame, respectively.

Loads

Summation of the external forces on the ring determines the unbalanced forces which are reacted by shell shear flow.

$$V = \Sigma EV$$

$$H = \Sigma EH$$

$$T = \Sigma \; EM - \Sigma (EV) \; (YE) - \Sigma EH \; (ZE - ZZF)$$

Shear flow at each cut due to unbalanced forces is calculated in the following manner:

$$Q_i' = \sum_{n=2}^{n=i} \frac{V \; DLS_{n-1} \; (ZB_{n-1} - ZZF)}{IOY_s} - \sum_{n=2}^{n=i} \frac{H \; DLS_{n-1} \; YB_{n-1}}{IOZ_s}$$

Since the foregoing calculation of shear flow due to horizontal unbalance is in error by a scalar quantity, an additional unbalance is introduced. This torque is

$$T' = \sum_{i=1}^{jj} \frac{Q_i' + Q_{i+1}'}{2} \left[(Y_{i+1} - Y_i)(ZB_i - ZZF) - (Z_{i+1} - Z_i)\, YB_i \right]$$

The correct shear flow at each cut is then obtained by adding a constant shear flow that satisfies torque balance to the initial calculated value.

$$Q_i = Q_i' - \frac{(T + T')}{2\ AREA}$$

Static ring loads, assuming the ring cut at the top centerline and fixed at the other end, are calculated by combining the effects of the external forces. The static moment at any cut is:

$$M_i = \sum_{n=2}^{i} \left(\frac{Q_n + Q_{n-1}}{2} \right) \left[(Z_n - Z_{n-1})(YP_i - YB_{n-1}) - (Y_n - Y_{n-1})(ZP_i - ZB_{n-1}) \right]$$

$$+ \sum_{\alpha=0}^{PSI_i} \left[-EM_\alpha + EV_\alpha\, (YP_i - YE_\alpha) + EV_\alpha (ZP_i - ZE_\alpha) \right]$$

The static vertical force at a cut is

$$V_i = \sum_{n=2}^{i} \left(\frac{Q_n + Q_{n-1}}{2} \right) (Z_n - Z_{n-1}) + \sum_{\alpha=0}^{PSI_i} EV_\alpha$$

The static horizontal force at a cut is

$$A_i = -\sum_{n=2}^{i} \left(\frac{Q_n + Q_{n-1}}{2}\right)\left(Y_n - Y_{n-1}\right) + \sum_{\alpha=0}^{PSI_i} EH_\alpha$$

Due to ring symmetry about the Z-axis, the redundants at the elastic center are calculated by the three independent equations. These equations are further simplified by the assumption that ring flexibility (EI) is constant.

$$BMO = -\frac{\sum \frac{M\ DLSP}{EI}}{\sum \frac{DLSP}{EI}} = -\frac{\Sigma M\ DLSP}{PP}$$

$$HO = -\frac{\sum \frac{M\ (ZPB-ZZF)DLSP}{EI}}{\sum \frac{(ZPB-ZZF)^2\ DLSP}{EI}} = -\frac{\Sigma M\ (ZPB-ZZF)\ DLSP}{IOY_F}$$

$$VO = -\frac{\sum \frac{M\ YPB\ DLSP}{EI}}{\sum \frac{YPB^2\ DLSP}{EI}} = -\frac{\Sigma M\ YPB\ DLSP}{IOZ_F}$$

The net internal ring bending moment, shear, and axial loads at any segment are obtained by taking the average of the loads at bounding cuts and the loads due to the redundants.

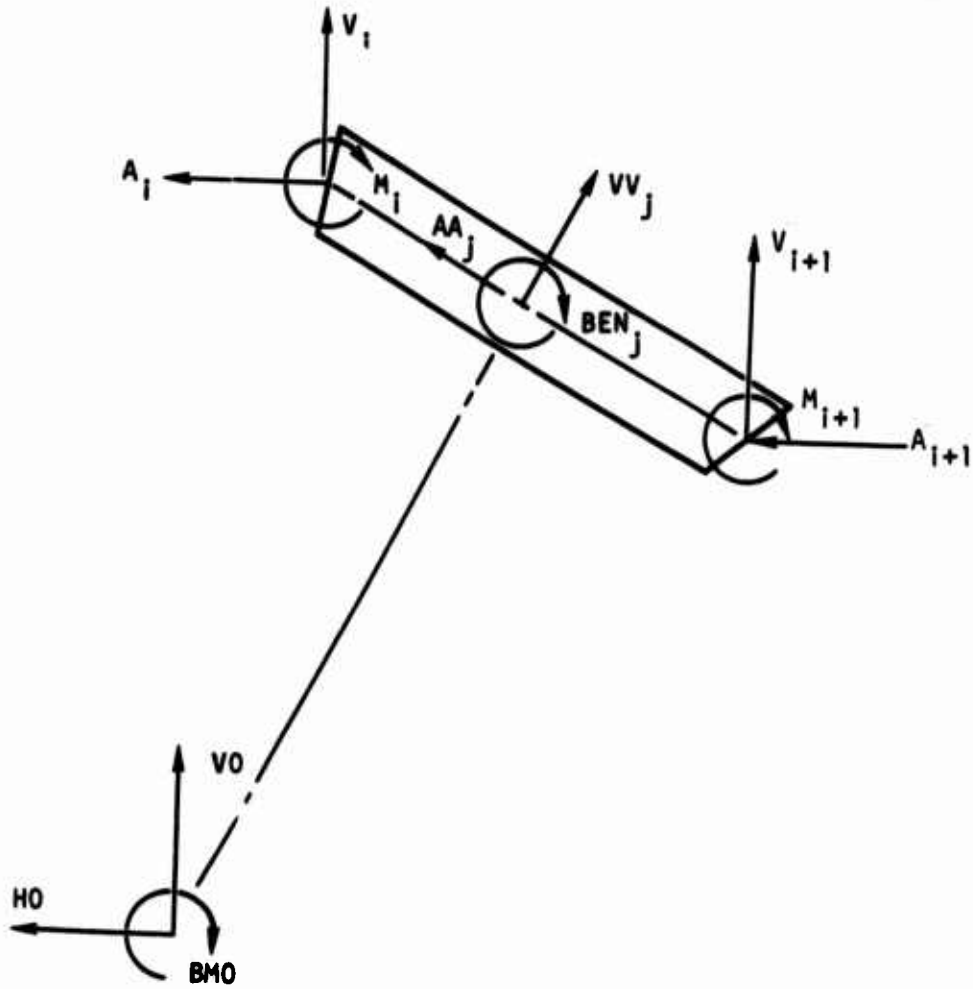

$$BEN_j = BMO + VO\ YPB_j + HO\ (ZPB_j - ZZF) + \left(\frac{M_i + M_{i+1}}{2}\right)$$

$$VV_j = \frac{\left[VO + \left(\frac{V_i+V_{i+1}}{2}\right)\right](Y_{i+1}-Y_i) + \left[HO + \left(\frac{A_i+A_{i+1}}{2}\right)\right](Z_{i+1}-Z_i)}{DLS_j}$$

$$AA_j = \frac{\left[VO + \left(\frac{V_i+V_{i+1}}{2}\right)\right](Z_{i+1}-Z_i) + \left[HO + \left(\frac{A_i+A_{i+1}}{2}\right)\right](Y_{i+1}-Y_i)}{DLS_j}$$

Synthesis

The sizing approach assumes shear resistant webs with the caps determined by material allowable and flange crippling. Frame stiffeners are assumed to be one gage greater than the web gage. The structure model and geometric constraints are shown in the following sketch.

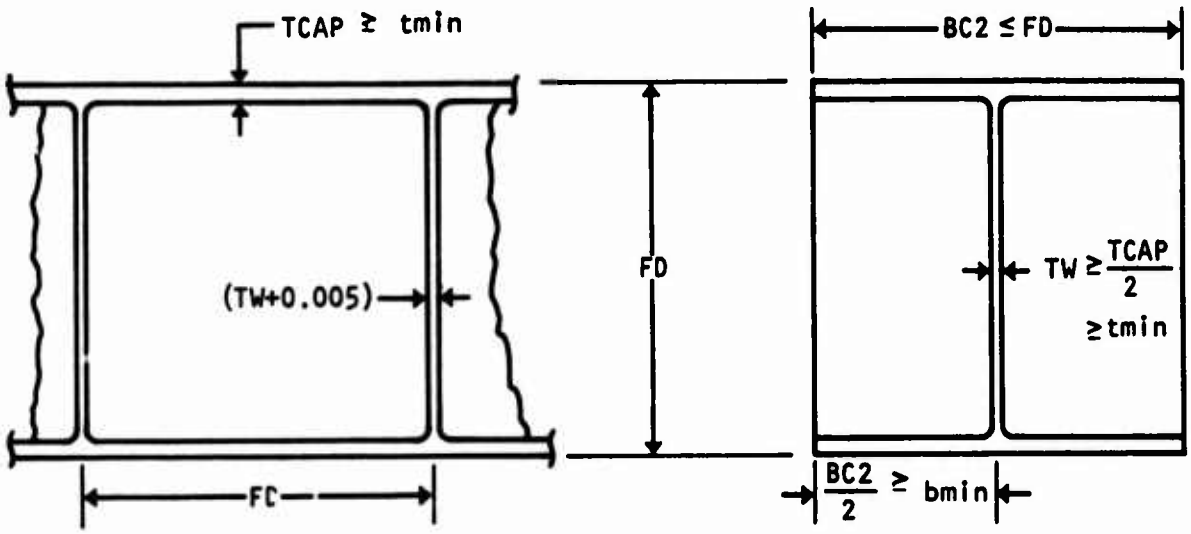

Ring segments are sized for each external load condition and compared with minimums and sizing from the previous load condition. Since each load condition may be at a different structure design temperature, material properties at the appropriate condition are used. The maximum cap load at a segment is

$$FA_j = \left| \frac{BEN_j}{FD} \right| + \left| \frac{AA_j}{2} \right|$$

Cap area that satisfies strength is

$$A_c = \frac{FA_j}{K\ Fcy}$$

where

K = reduction factor on allowable stress (0.9)

Fcy = frame material compression yield stress

Flange crippling allowable is

$$F_{CCR} = \frac{K_c \pi^2 E}{12\ (1-\mu^2)} \left(\frac{2\ TCAP}{BC2}\right)^2$$

where

K_c = flange crippling coefficient (0.426)

Equating strength and crippling stress and solving for cap thickness,

$$K\ Fcy = F_{CCR} = \frac{K_c \pi^2 E}{12\ (1-\mu^2)} \left(\frac{2\ TCAP}{BC2}\right)^2$$

$$\frac{2TCAP}{BC2} = \sqrt{\frac{K\ Fcy\ 12(1-\mu^2)}{K_c \pi^2 E}}$$

$$TCAP = \sqrt{\frac{A_c}{2} \sqrt{\frac{KFcy\ 12(1-\mu^2)}{K_c \pi^2 E}}}$$

Web shear strength is

$$F_{su} = \frac{\left|VV_j\right|}{FD\ TW}$$

where

F_{su} = frame material ultimate shear strength

Making the web shear resistant and equating shear stress and crippling stress, the web thickness is

$$F_{SCR} = \frac{K_s \pi^2 E}{12(1-\mu^2)} \left(\frac{TW}{FD}\right)^2 = \frac{\left|VV_j\right|}{FD\ TW}$$

where

K_s = shear crippling coefficient (7.5)

$$TW = \left(\frac{\left|VV_j\right|\ FD\ 12\ (1-\mu^2)}{K_s \pi^2 E}\right)^{1/3}$$

The final web thickness is the maximum of that required for shear resistance, shear strength, or half the cap thickness.

After all load conditions have been evaluated, the frame weight is calculated by the summation of cap web and stiffener volume.

$$TWT = \sum \left[BB2_j\ (TWW_j + 0.005) + TCC_j\ 2\ BB2_j + TWW_j\ FD\right] DLSP_j RHO$$

where

$BB2_j$ = BC2, cap width at a frame segment

TWW_j = TW, web thickness at a frame segment

TCC_j = TCAP, cap thickness at a frame segment

RHO = frame material density

WEIGHT ESTIMATION

Weights of individual components are calculated in various functional routines at the detail weight level. Figure 27 shows the output summary of a typical transport fuselage run. This table presents the component weights in the AN-9102-D reporting format.

BASIC STRUCTURE WEIGHT

Sizing of the primary load-carrying members are calculated according to individual requirements as previously discussed. However, due to the complexity of certain component design requirements, statistical and empirical formulations are used to estimate the weight of these items.

Bulkheads and Frames

Bulkhead and frame weight estimates are made for primary flight and ground load redistribution members, pressure bulkheads, pilot ejection frames, and ramp redistribution structures. Load redistribution frame weights are calculated in subroutine SFOAWE from peripheral sizing of caps, web, and stiffeners at as many as 60 ring segments. Bulkhead weights are calculated in subroutine BLKHDS for an equivalent thickness established by pressure requirements. The applicable bulkhead surface area is determined by compartment definitions.

Fighter, attack, and bomber aircraft in which emergency escape is provided by seat ejection require rail support frames. The weight estimate of a 20-pound frame for each crewmember is a statistical approximation. Should an improved estimate be available, this weight can be modified by user prescribed input data. This calculation is accomplished in subroutine MISCWT.

Cargo loading ramps on transport vehicles are hinged off a support frame. The critical loads for the design of these frames occurs in the process of cargo loading when tracked vehicles crest at the hinge line and all of the weight is supported by the single ramp frame. The weight estimating approach assumes that the weight of the tracked vehicle that is to be carried by the transport is a function of the fuselage cross section. The statistically derived value of 0.77 pound per inch of ring periphery is used to estimate this item. This unit weight can be revised by user input data.

*** BODY GROUP ***
BASIC STRUCTURE

BULKHEADS AND FRAMES			
	351.00	168.3	
	998.00	1531.9	
	1058.00	105.9	
	734.00	368.4	
	958.00	842.7	
	1641.00	98.8	
	1728.00	70.9	
	1314.00	402.1	
	272.00	42.6	
	452.00	526.9	
	1398.00	141.7	
MINOR FRAMES		1885.4	
JOINTS, SPLICES AND FASTENERS		609.6	
COVERING - UPPER BETWEEN LONGERONS		903.3	
- SIDE BETWEEN LONGERONS		2234.4	
- LOWER BETWEEN LONGERONS		797.8	
COVERING LONGITUDINAL STIFFENERS - UPPER BETW. LONG.		539.0	
- SIDE BETW. LONG.		1179.2	
- LOWER BETW. LONG.		713.3	
LONGERONS - UPPER		524.2	
- LOWER		453.7	
ENGINE DRAG		0.0	
LONGITUDINAL PARTITIONS - (STRUCTURAL)		1164.2	
FLOORING AND SUPPORTS - (BASIC STRUCTURE)		3421.1	
FITTINGS		130.8	
TOTAL - BASIC STRUCTURE			18855.9

Figure 27. Fuselage program output summ

SECONDARY STRUCTURE

ENCLOSURES (EXCLUDING TURRET ENCLOSURES) CANOPY - PILOT	0.0	
WINDSHIELD (EXCLUDING BULLET PROTECTION)	298.6	
WINDOWS AND PORTS INCL. FRAMES	300.5	
WINDOWS AND PORTS - CABIN	6.3	
FLOORING AND SUPPORTS (SECONDARY STRUCTURE)	404.4	
STAIRWAYS AND LADDERS (FIXED)	32.4	
NOSE RADOME	96.3	
SPEED BRAKES - STRUCTURE AND SUPPORTS	0.0	
TOTAL SECONDARY STRUCTURE		1138.6

(DOORS, PANELS AND MISCELLANEOUS)

	AREA-SQ. FT	
DOORS AND FRAMES		
- MAIN GEAR	163.0	863.9
- NOSE GEAR	32.9	164.5
- AFT CARGO	385.3	1117.4
- AFT RAMP	108.5	1071.4
- PRESSURE	65.7	427.8
- BOMB	0.0	0.0
- GUN		0.0
- AMMO		0.0
- ESCAPE	24.2	471.9
- ESCAPE	18.5	185.0
- PARATROOP	42.4	466.4

Figure 27. Fuselage program output summary (cont).

	AREA-SQ. FT.		
- ENTRANCE	12.2	122.0	
- ACCESS		133.3	
PANELS (NON STRUCTURAL)			
- SPOILER DEFLECTOR		20.0	
- MAIN GEAR POD	700.0	1181.4	
WALKWAYS, STEPS, GRIPS		168.2	
ANTI-SKID PROTECTION		58.9	
FAIRING AND FILLETS		0.0	
EXTERIOR FINISH		0.0	
INTERIOR FINISH		248.6	
TOTAL SECONDARY STRUCTURE (DOORS, PANELS, MISC.)			6680.6
TOTAL - BASIC STRUCTURE			18855.9
TOTAL SECONDARY STRUCTURE			1138.6
TOTAL - BODY GROUP			26675.1

Figure 27. Fuselage program output summary (concl).

Cover, Minor Frames, Longerons

Cover panels, minor frames, and longerons (stringers) are sized for strength, stiffness, and other design requirements in the shell analysis design loop. Cover thickness to satisfy torsional stiffness requirements are calculated separately in subroutine GJ1GEO. The weight calculations for these structural elements are performed in subroutine FWEIGH. The weight calculations differ according to segment location, cutouts, and sharp or normal geometric transitions.

The nose and tail segment weight calculations assume constant cover thickness, minor frame size, and stringer area from the first and last synthesis cuts, respectively. To avoid weight duplication, a check for the presence of nose or tail radome dictates the need for these segments.

The segment in which a sharp geometric transition, such as at the start of duct inlets, is specified as segments less than or equal to 2.0 inches in length. Weight, in this instance, is calculated using structural sizing data and geometry for the aft edge of the segment. Covers and stringers in the upper, side, and lower quadrants are sized and weighed separately. Should cover panels be milled, weight per linear inch calculated at the bounding synthesis cuts is based on stringer spacing, frame spacing, land widths, and the difference between land and field thicknesses.

Cover thickness to satisfy torsional stiffness requirements can take a radical step at the synthesis cut due to the presence of cutouts; this difference is provided as two thickness values at each cut. Should cutouts exist in the upper or lower quadrants, weight calculations are based on the remaining panel geometry. Side panel cutout penalties are not evaluated in this program. However, should side cutouts be defined, a rule-of-thumb side cutout penalty equal to four times the material removed is added to the cover weight calculation. This penalty accounts for additional material required to beam the loads around the hole.

The weight of primary longerons, secondary longerons, and cutout longerons are calculated on the basis of linear taper between synthesis cuts. Stringer weights are also based on linear taper except in the presence of upper or lower cutouts; the actual number of stringers that traverse the segment are then used in the weight calculations. Strength integrity is provided by the cutout longerons which support the load that would normally be resisted by the missing stringers.

The weight of a single minor frame for the final frame spacing is calculated in subroutine MINFR. Minor frame weight within the segment is calculated from the frame weight per linear inch at the bounding cuts.

The final estimated weights for each of the analytically calculated elements are derived by applying indexing factors. These factors are considered to be calibration factors as well as incremental weight factors for design parameters and unique conditions not considered in the analysis.

Index factors are determined by program calibration runs on existing hardware.

Miscellaneous Basic Structure

Weights of joints, splices, and fasteners are estimated as a function of cover, and longeron weights in subroutine FWEIGH, and longitudinal partitions are calculated in subroutine PARTIT.

- Joints, splices, and fasteners = 0.1 (weight of cover + longerons)
- Partitions = 0.2 (weight of cover + minor frames)

Beams for redistributing engine thrust loads and support fitting weights are calculated in subroutine MISCWT. Engine drag beams are estimated by the following equation:

$$\text{Drag beam} = 0.00038 \text{ (total thrust)}$$

Fittings at the load introduction points of the wing, horizontal, and nacelle are calculated according to maximum load and major frame material properties.

$$\text{Fitting} = \text{maximum load} \left[\frac{141.3125\rho}{F_{T_U} + F_{CY}} + \frac{78.20\rho}{F_{SU} + F_{BRU}} + 2.5\text{x}10^{-5} \right]$$

where

ρ = material density

F_{T_U} = ultimate tensile strength

F_{CY} = compression yield strength

F_{SU} = ultimate shear strength

F_{BRU} = ultimate bearing strength

Cargo flooring and supports are considered to be basic structure. The approach, however, is similar to most secondary structure weight estimating methods and, therefore, the weight calculations are performed in subroutine SECOST.

Cargo flooring and support requirements have been standardized by the 463L military specification for threadway design, loading capability, and tiedown receptacle pitch. Wear resistance and design application lead to a unit weight approach. However, support loads increase as a function of beaming distance between the shell side walls.

Maximum bending moment increases as the square of the beam length, and since support structure is only part of the total floor, the following equations are used to estimate floor weight.

1. Floor designed for wheeled vehicles:

$$\text{floor and supports} = \text{floor area } (4.8) \left(\frac{W}{14.16}\right)^{0.66}$$

2. Floor designed for bulk cargo:

$$\text{floor and supports} = \text{floor area } (3.3) \left(\frac{W}{14.16}\right)^{0.66}$$

3. Floor designed for passengers only:

$$\text{floor and supports} = \text{floor area } (2.27) \left(\frac{W}{14.16}\right)^{0.66}$$

where

W = maximum fuselage width

SECONDARY STRUCTURE WEIGHT

Fuselage secondary structure is a category of weight items that serve a wide range of purposes. These items are function-dependent and, therefore, orientation, presence, and requirements can be predicted according to vehicle class. Although this program estimates the secondary structure elements in Table 8, this list may not include certain items which may be peculiar to a specific configuration. Item 12 on the secondary structure list would be used for unique secondary structure components.

The primary objective of this program is utility and, therefore, the number of input data parameters have been minimized. This procedure, subroutine SECOST, consists of three different approaches. A check list approach is programmed for use in the initial conceptual phase when detail geometric descriptions are not readily available. The method provides rule-of-thumb weights or weights which may be derived from other vehicle considerations. A second approach estimates weights based on geometric description function

TABLE 8. SECONDARY STRUCTURE WEIGHT ESTIMATING OPTIONS

Secondary Structure Components	Wt Est Options			Vehicle Category		
	1	2	3	F	B	T
1. Pilot's canopy and mechanisms	●	●	●	●	●	
2. Navigator/strike officer's canopy	●	●	●	●	●	
3. Windshield and framing	●	●	●	●	●	●
4. Cockpit windows and ports	●		●	●	●	●
5. Cabin windows and ports	●	●	●	●	●	●
6. Cockpit flooring and supports - secondary	●	●	●	●	●	●
7. Stairway and ladder	●	●		●	●	●
8. Nose radome and mechanisms	●	●	●	●	●	●
9. Aft radome and mechanisms	●	●	●	●	●	●
10. Miscellaneous radomes	●		●	●	●	●
11. Speed brakes	●		●	●	●	●
12. Weight of other secondary structure	●			●	●	●
13. Main landing gear door and mechanisms	●		●	●	●	●
14. Nose landing gear door and mechanisms	●		●	●	●	●
15. Aft cargo doors and mechanisms	●		●	●	●	●
16. Side cargo doors and mechanisms	●		●	●	●	●
17. Forward loading ramp and mechanisms	●		●	●	●	●
18. Forward ramp toe/extension	●		●	●	●	●
19. Aft ramp and mechanisms	●		●	●	●	●
20. Aft ramp toe/extension	●		●	●	●	●
21. Internal pressure door	●		●	●	●	●
22. Weapons bay doors and mechanisms	●		●	●	●	●
23. Gun access doors	●		●	●	●	●
24. Ammunition access doors	●		●	●	●	●
25. Emergency exits - flight	●	●	●	●	●	●
26. Emergency exits - ground	●	●	●		●	●
27. Paratroop doors	●	●	●	●	●	●
28. Spoilers-deflectors-paratroop doors	●	●	●	●	●	●
29. Entrance doors	●	●	●	●	●	●
30. Miscellaneous access doors	●	●		●	●	●
31. In-flight refueling doors	●		●	●	●	●
32. Ram-air turbine doors	●		●	●	●	●
33. Engine removal doors	●	●	●	●	●	●
34. Accessory access doors	●	●	●	●	●	●
35. Thermal protection panels	●		●	●	●	●
36. Main landing gear pod	●		●	●	●	●
37. Miscellaneous fairings	●	●	●	●	●	●
38. Dorsal fin panels	●		●	●	●	●
39. Walkways, steps, and grips	●		●	●	●	●
40. Antiskid protection	●		●	●	●	●
41. Exterior finish	●	●		●	●	●
42. Interior finish	●	●		●	●	●

Weight estimating options:
1. Input weights
2. Rule-of-thumb estimate
3. Weight based on descriptive data

Vehicle categories:
F Fighters and attack
B Bombers
T Transports
* Grouped according to estimating methods

and flight environment. The basic assumption governing this approach is that secondary structure items may be estimated based on geometric considerations with a minimum of loads data, if any. Thus, the major portion of this procedure is written as a weight per unit area calculation. The third capability is to override the program with input weights. This last method would be used when detail weight data are available for any specific component. The methods used for each of the secondary structure elements are discussed in the following paragraphs

Canopy

Crew ejection canopies exist on fighters and attack vehicles. On certain bombers, this is also the means for visibility and escape. The rule-of-thumb weight of 215 pounds is used for both pilot and navigator/strike officer canopies. Canopy geometry is defined by mean length. This parameter is sufficient, since ejection path and head clearances combined with side vision angles normally determine the canopy radius and height. Maximum dynamic pressure is tested against sea level dynamic pressure at mach 1 to introduce the environmental effects in the following equations.

1. Canopy = 2.158 x length; $q < 1480$

2. Canopy = length $(0.0026\ q - 1.69)$; $q > 1480$

Windshield, Windows, and Ports

The windshield, windows, and ports are generally designed by pressure or bird impact. Windows and ports in passenger compartments include an acoustic suppression panel which also protects the structural pane from inadvertent damage.

The rule-of-thumb approach is programmed for the windshield and the cabin windows and ports. Windows and ports in the crew compartment are included in the windshield rule-of-thumb estimates. However, on fighters and attack vehicles which require nonstatistical rearward vision, transparency geometry is required. The rule-of-thumb estimates for windshield are as follows.

Vehicle Class	Windshield Weight (lb)
• Fighter, attack	80
• Bombers	640
• Transports for wheeled or bulk cargo less than 100,000 lb	250
• Transports for wheeled or bulk cargo greater than 100,000 lb	640
• Personnel transports less than 100,000 lb	125
• Personnel transports greater than 100,000 lb	250

Windows and ports in the cabin occur on transports, and are fairly standard in size and design. The rule-of-thumb approach uses 10 pounds for each window times the specified number.

The alternate program approach to transparency weight estimation is based on the analytical derivation of thickness, and calculating weight of transparency, frame, and other considerations using this panel thickness.

The bird-impact criteria is examined for the frontal panels. Kangas and Pigman[9] proposed an empirical method for predicting full-tempered glass thickness to resist penetration of a 4-pound bird as follows:

$$t = 0.136 \, [\, 1 - 0.348 \cos \alpha \,] \, e^{\frac{V \cos \alpha}{87.3}}$$

where:

t = thickness of full-tempered glass pane in inches

V = penetration velocity in mph

α = total angle of slope of panel

e = natural logarithm base

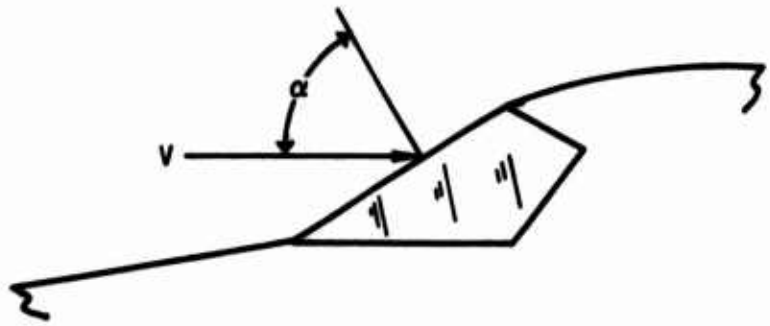

Reference 10 suggests the use of stretch acrylic as a more efficient material for bird-impact protection. The following equation is used in the program, and is a curve-fit of the stretched acrylic data points:

$$t\ \text{acrylic} = 0.23\ [\ 1 - 0.348 \cos \alpha]\ e^{\frac{V\cos\alpha}{157.4}}$$

Strength for pressure design is examined for each of the components. In the bird impact solution, none of the geometry terms (length, width, or curvature) appear; for pressure design, these are pertinent parameters. Since flat panels are usually used on aircraft and also because of the difficulty in ascertaining windshield curvature in the preliminary design phase, a conservative flat panel approach is used for pressure design. The peak bending moment occurs at the short side as follows:

$$M = KPb^2$$

where

K = function of panel aspect ratio

p = pressure

b = panel short side dimension

The following equation for acrylic thickness is derived from the beam flexure equation

$$t = \left(\frac{6KPb^2}{\sigma}\right)^{1/2}$$

where

σ = the ultimate tensile strength of acrylic (10,500 psi)

The thickness, although calculated in the same manner, is used differently in the weight calculation of each component.

The windshield and cockpit windows and ports require an abrasion-resistant outer sheet, anti-icing provisions, and bonding interlayers and, therefore, the thickness is greater than that established by strength. The weight of windshield and framing is as follows:

$$WT = (t) \quad (L) \quad (W) \quad (N) \quad (\rho) \quad (K_f)$$

where

L = panel length

W = panel width

N = number of panels

ρ = density of acrylic (0.043 lb/cu in.)

K_f = factor for frames, etc (2.3857)

The cabin window and port weight calculation is identical to the cockpit calculation except for the value for K_f is 4.07. This factor accounts for a single pressure pane, an air gap, an acoustic panel, and the inherently greater frame requirement. Should the number of cabin windows be the only specified data, a rule-of-thumb estimate of 10 pounds per window is used.

Flooring and Supports

The rule-of-thumb estimate for flooring and supports on fighter aircraft is 14 pounds per crewmember. On transports and bombers, the following equation is used to estimate this item.

$$Wt = \left(\frac{D+W}{144}\right)^{3/2} (24) \quad (N)$$

where

D = maximum fuselage depth

W = maximum fuselage width

N = number of crewmembers

The alternate approach for all vehicle classes is 2.21 psf.

Stairway and Ladders

Stairway and ladder weights are only estimated by a rule-of-thumb approach for fighter aircraft; the weight is 8 pounds. On transports and bombers, the following equation is used to estimate this item:

$$Wt = 8 + \left(\frac{D}{12} - 11.45\right) 9$$

Radomes

Radome weight estimates are based on unit weights for subsonic or supersonic flight conditions. The step function in the unit weight is due to radar design which requires the thickness to be multiples of its wavelength. The unit weights are as follows:

Radome	Subsonic	Supersonic
Nose	1.75	2.76
Tail	1.75	2.76
Miscellaneous	1.75	1.75

Nose and tail radome surface areas are either input data or obtained from the first and last structural synthesis segment. There is no way to predict miscellaneous radome surface area and, therefore, weight can be calculated only by inputing surface area.

Speed Brakes

The weight estimate for speed brakes and supports is based on dynamic pressure and geometry. Single or multiple panels may be used to decelerate the vehicle. If multiple panels are used, the length, width, and total combined surface are required. For single panels, the area is sufficient to describe the surface, and the length and width are determined by the following relationship:

$$\text{Length} = 0.8 \text{ width}$$

To estimate the panel unit weight:

$$\text{Unit weight} = 2.35 + 0.306\, qWL^2 \times 10^{-5}$$

where

q = dynamic pressure in psi

W = width in inches

L = length in inches

Supports and hinges add 30 percent to this estimate; therefore, to estimate the total weight:

$$\text{Weight} = 1.3\ (\text{unit weight})(S)$$

where

Unit weight = pounds per square foot

S = panel area in square feet

Doors, Panels, and Miscellaneous

Those items that fall in this category and are estimated on the basis of weight per unit area are tabulated as follows.

Item	Rule-of-Thumb Weight or Weight/Item	Unit Weight (lb/sq ft)
Main landing gear door	None	5.3
Nose landing gear door	None	5.0
Aft cargo door	None	2.9
Side cargo door	None	9.5
Ramp toe (extension)	None	4.0
Gun access doors/panels	15 lb/gun	
Ammo access doors/panels	0.020 lb/rnd	
Paratroop door	230 lb/door	11.0
Spoiler deflectors	10 lb/door	
Entrance door	120 lb/door	10.0
In-flight refueling - probe	10	
In-flight refueling - drogue	100	
Ram-air turbine	25	5.0
Thermal protection		2.5
Main gear pod		2.2
Dorsal		1.5

Cargo ramps are estimated on the basis of 12.21 pounds per square foot. However, if the length between the hinge and ground are known, the following equation is used to estimate the weight:

$$\text{Weight} = 0.933\ LS$$

where

L = length in feet

S = area in square feet

The pressure door is estimated on the basis of 5.5 pounds per square foot. If length and width are defined, pressure is used to synthesize the door T-bar using the methods for bulkhead synthesis in subroutine DBLKHD. Lock, mechanism, and actuation provisions are reflected in the weight estimate for this item as follows:

$$\text{Weight} = 2.5\ tsp$$

where:

t = theoretical mean thickness

s = panel area in square inches

p = density of material (minor frames) in pounds per cubic inch

Weapons bay doors are estimated according to specific design arrangements. The following equations are used to estimate this item:

1. Sliding weapons bay doors

   Weight = door area (1.3) (1.55 + 0.0009q)

2. Single-hinged weapons bay doors

   Weight = door area (1.7) (1.55 + 0.009q)

3. Double-hinged weapons bay doors

   Weight = door area (1.9) (1.55 + 0.0009q)

where

q = maximum dynamic pressure, psf

Emergency exits are estimated according to vehicle category. Fighter and bomber aircraft usually provide in-flight crew escape by means of canopy ejection. However, if canopies are not provided, the rule-of-thumb estimate is 170 pounds per crewmember. If escape hatch area is given, the unit weight of 19.5 pounds per square foot is used to estimate the hatch.

On transports, emergency exit is provided by entrance doors. Additional escape requirements are considered to be provided by type IV doors[11]. The rule-of-thumb estimate for pushout-type doors is 48 pounds per door. Should area be given, the unit weight used is 19.5 pounds per square foot.

Plug-type escape hatches are inherently lighter; the weight estimate on the rule-of-thumb basis is 24 pounds per door. A unit weight of 10 pounds per square foot is used if area is given.

Miscellaneous access doors consist of panels required for electronics compartment, fuel, equipment, batteries, and other component maintenance. The definition of all the access requirements are not available until the late stages of final design. The weight approach is based on vehicle category and shell wetted area, as follows:

1. For fighters and bombers:

$$\text{Weight} = 794.495 \ (\log S) - 2067.32$$

2. For transports:

$$\text{Weight} = 10.45 \ S^{.48}$$

where

S = fuselage wetted area in square feet

Engine removal and accessory access doors are estimated on the unit weight basis. 2.93 and 2.5 pounds per square foot is used for engine doors and accessory doors, respectively. If door areas are not input data, area is estimated according to engine location, diameter, and length. The accessory access door area is estimated to be a square panel equal to the engine diameter plus 5 inches.

The rule-of-thumb estimate for miscellaneous fairings is 0.5 pound per inch of wing root chord. If fairing area is input, the unit weight of 1.5 pounds per square foot is used.

Walkways steps and grips, and antiskid protection are required on some transport aircraft. These items are estimated on the basis of walkway length. Totals of 0.1 and 0.035 pound per inch are used for walkways steps and grips, and for antiskid protection, respectively.

Exterior finish, if required, is based on 0.026 pound per square foot of fuselage wetted area. Interior finish and corrosion protection is required on aluminum and other susceptible materials used in shell construction. A total of 0.05 pound per square foot of fuselage wetted area is used to provide interior coating of covers and frames.

Section III

PROGRAM DESCRIPTION

GENERAL DISCUSSION

The methods, equations, and logic discussed in the previous section have been programmed in FORTRAN Extended for the CDC 6600 computer. The program is structured into two overlays consisting of the two control programs (FUS01, FUS02) and 44 subroutines. Seven dummy subroutines have been included in this program for planned extension of program capabilities. Five of these dummy subroutines are associated with the capability for evaluating elliptical shell shapes. The dummy subroutine FHCMB is intended to control honeycomb panel synthesis. Dummy subroutine WTDIST would provide fuselage weight distributions for inertia purposes and iteration on loads. Two of the subroutines (MATLP1, SPRINT) are data output routines. Optional output of intermediate calculations are provided within individual data development routines.

Error messages, warning messages, and corrective measures have been built into the program such that most user errors will not result in catastrophic failure. In some cases, the warning is of a nature for which no user action is necessary. In other instances, incompatible data are either corrected, revised, or bypassed. The implications, probable cause, and recommended action associated with the various messages are presented in the subroutine discussions.

GENERAL LOGIC FLOW

The program subroutine flow diagram is shown in Figure 28. The functional flow diagram of the two overlays is shown in Figure 29. This diagram shows the major data manipulation and search loops within the program.

GENERAL MAPS

Data storage and transmittal are accomplished through the use of common, labeled common, and mass storage files. Mass storage file data, with the exception of the FUS and FUSDWI arrays, are read into and written from data regions in common. The FUS and FUSDWI arrays, which are stored in the program region of subroutine FUSLD, are presented with the discussion of that subroutine.

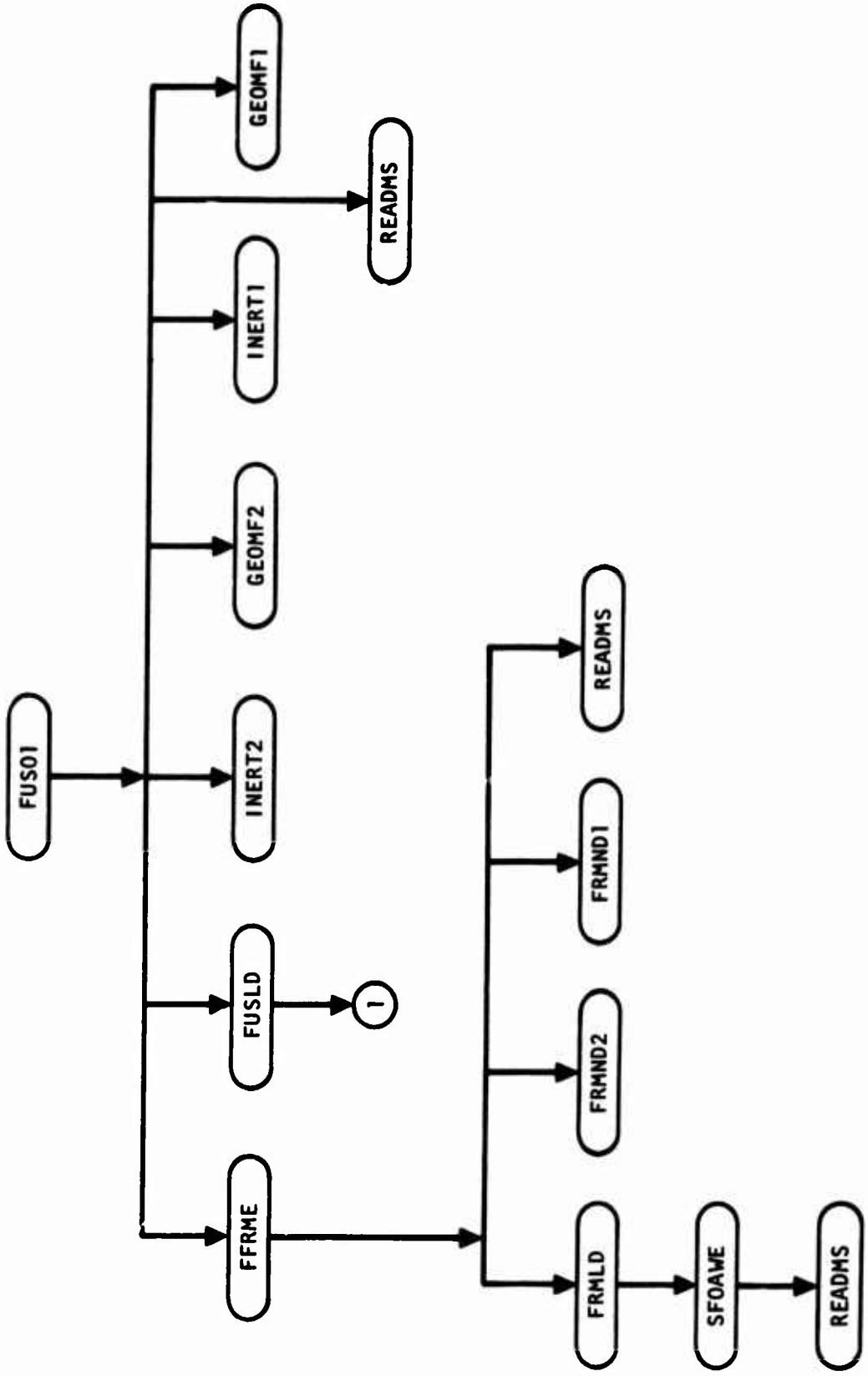

Figure 28. Subroutine flow diagram.

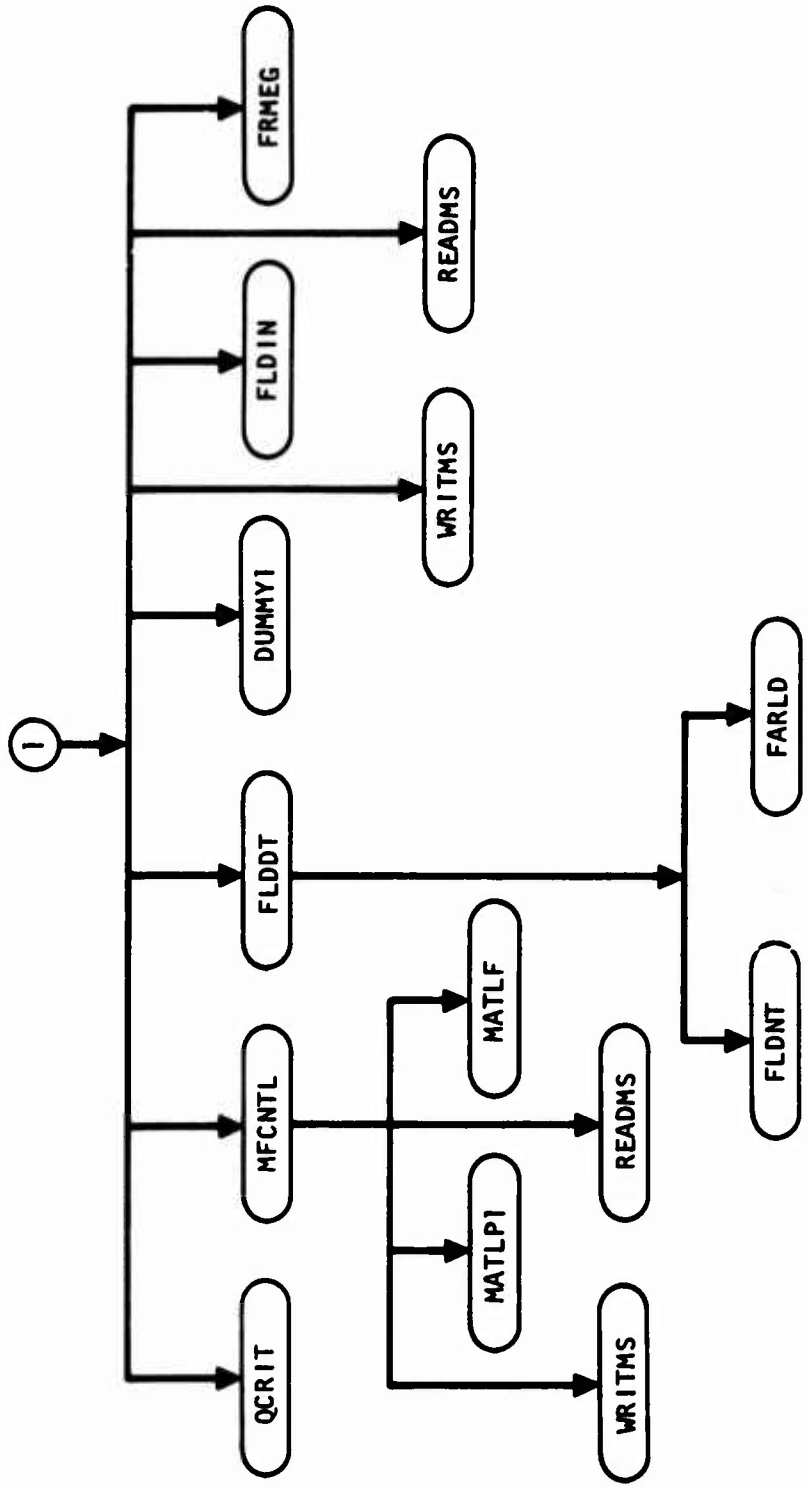

Figure 28. Subroutine flow diagram (cont).

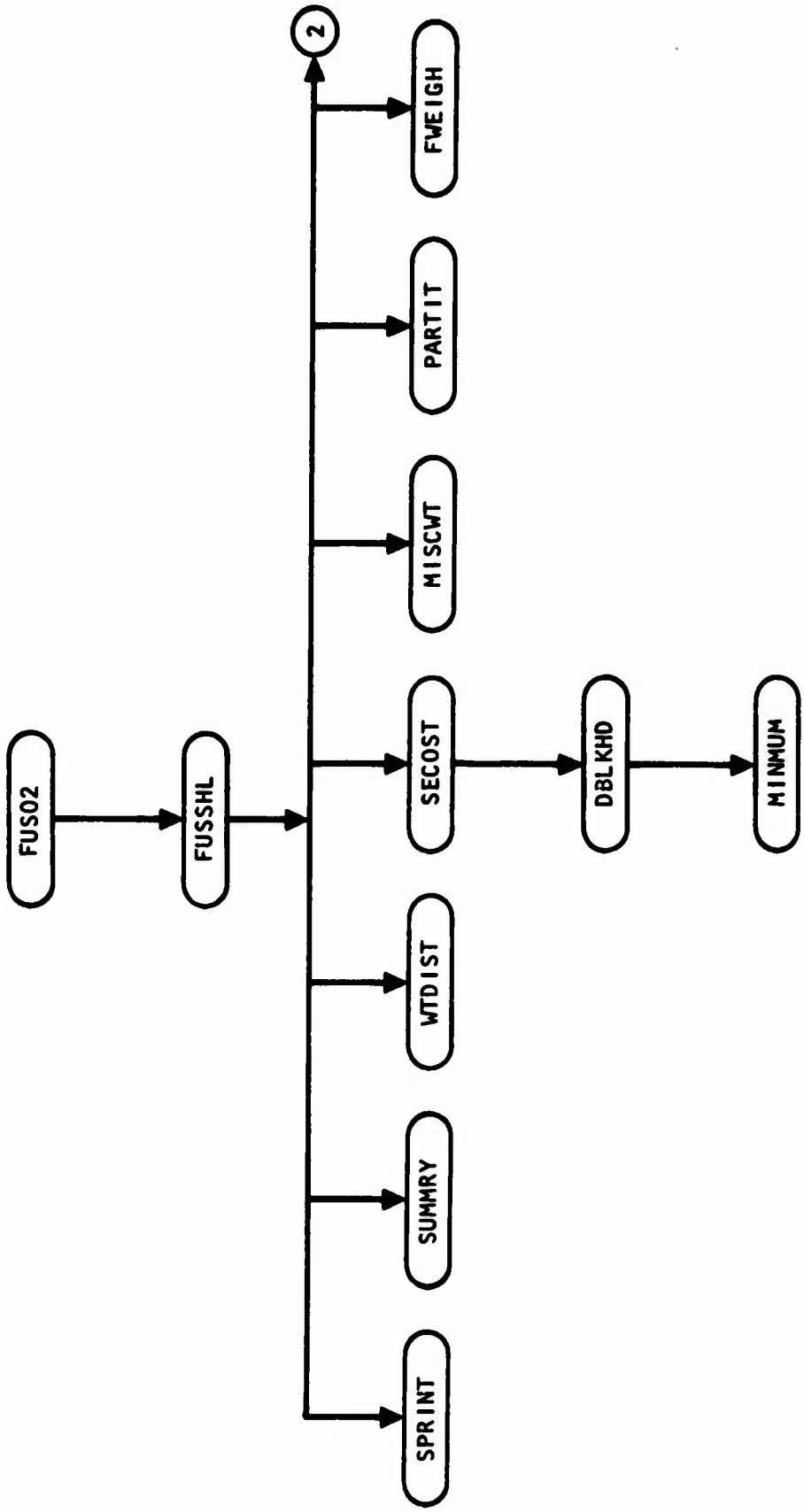

Figure 28. Subroutine flow diagram (cont).

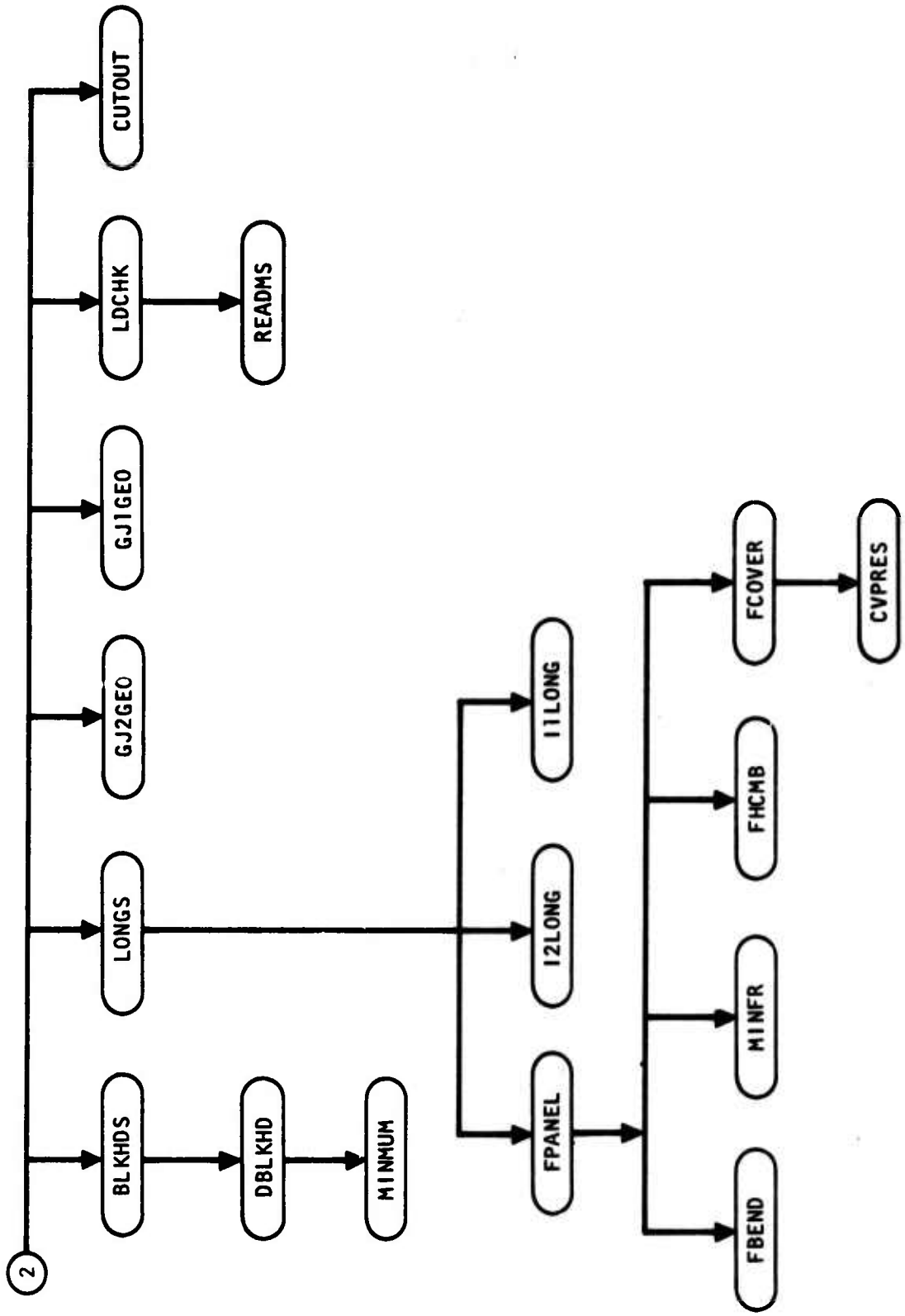

Figure 28. Subroutine flow diagram (concl).

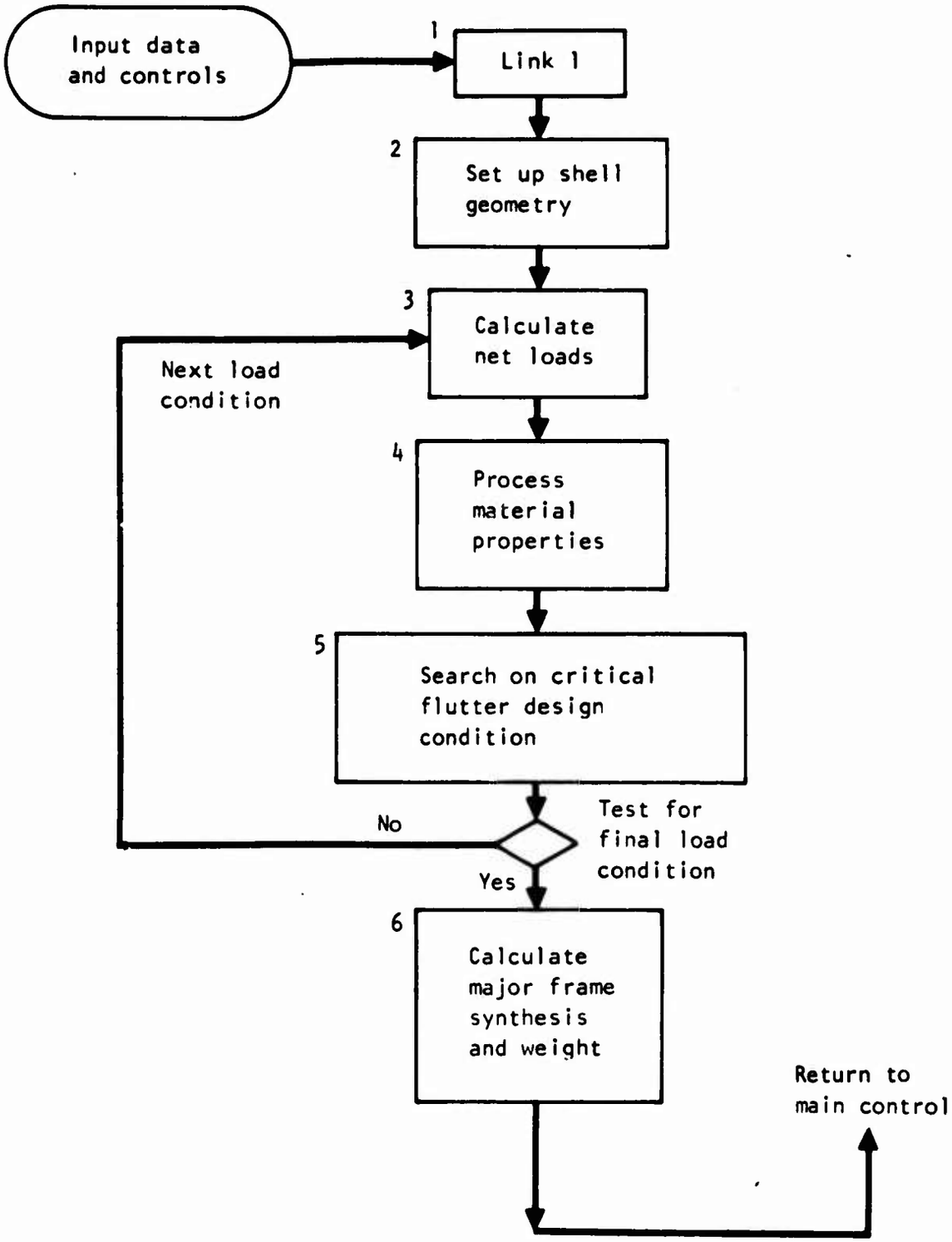

Figure 29. Fuselage general functional flow diagram.

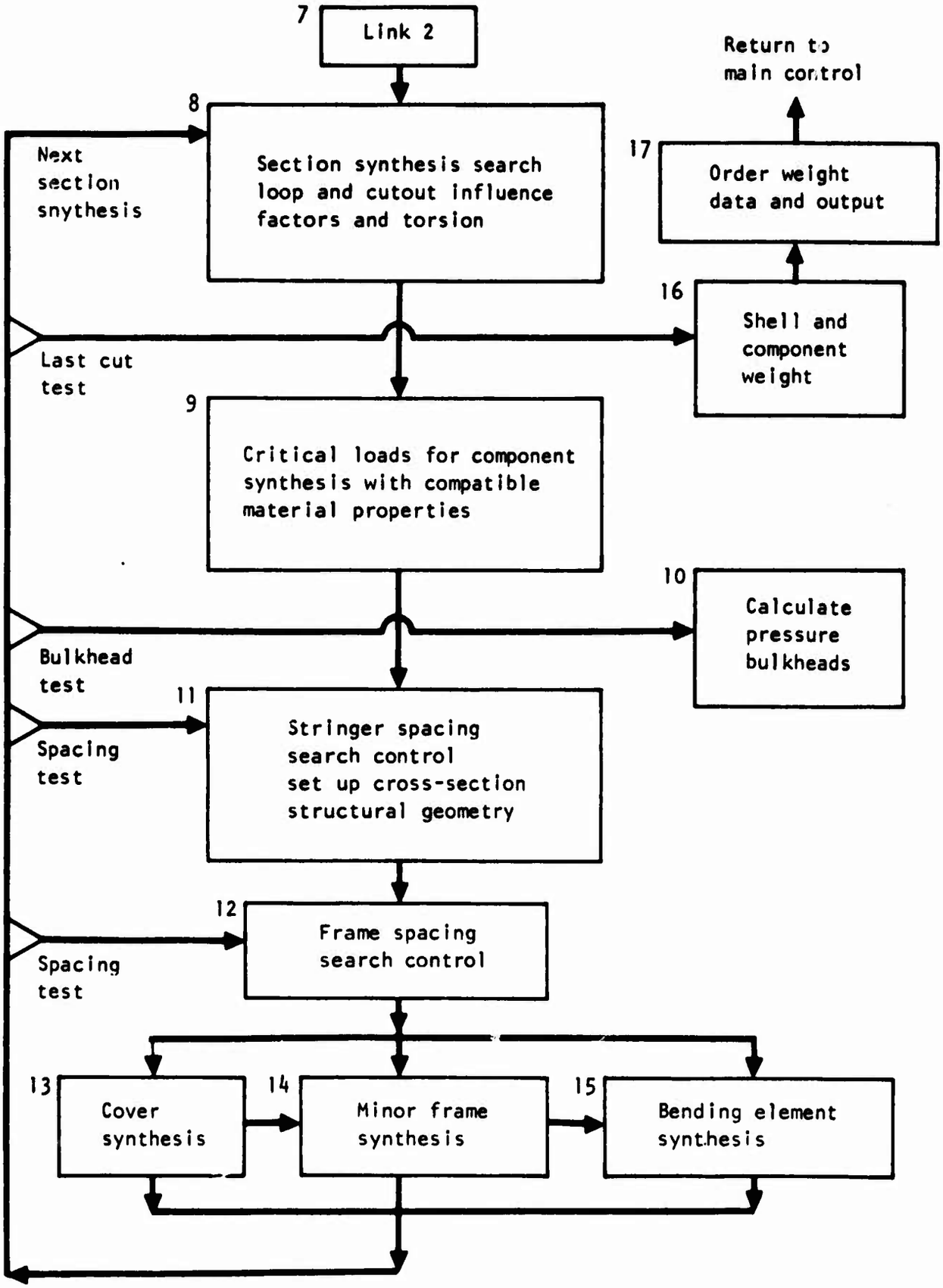

Figure 29. Fuselage general functional flow diagram (concl).

COMMON

The common consists of 4,400 cells which are divided into the major regions shown in Table 9. Table 10 presents an alphabetical listing of arrays and variables within the common region. Type designates whether variable is input (I) or calculated (C). Many items that appear in Table 10 as calculated (C) variables may ultimately take on values that are input to the fuselage module. This is a function of whether or not default values or inputs are overridden in the synthetic process. However, items designated as input (I) types will always take on values that are input to the fuselage module. When the variables in this table are subsets of larger arrays, the higher order array is referenced in brackets.

Tables 11 through 28 are maps of those arrays or parts of arrays that have specific significance which are not explained in the alphabetical listing.

LABELED COMMON

Labeled common arrays are used to transfer program control words and vehicle weight summary data. These arrays are as follows:

1. XMISC

   The first location in this block is used to transmit the number of different materials which exist in the material library files to subroutine MFCNTL.

2. IP

   This array is used to transmit print control indicators to various subroutines as shown in Table 29.

3. FDAT

   This array stores fuselage (and other components) weight summary data for use in total vehicle summary calculations and output as shown in Table 30.

MASS STORAGE FILES

Mass storage file records used by this program as shown in Table 31. Variables in these records are discussed in the common region tables or in the discussion of subroutine FUSLD.

TABLE 9. COMMON ARRANGEMENT

Common Location	Variable Name	Description
1 -- 240	D(1) -- D(240)	Physical constants and program constants, and default values
241 -- 1200	D(241) -- D(1200)	Input fuselage design data
1201 -- 2000	D(1201) -- D(2000)	Program-generated data arrays and file record storage
2001 -- 4000	T(1) -- T(2000)	Program-generated data arrays and file record storage
4001 -- 4100	SUMM(1) -- SUMM(100)	Final fuselage weight and balance summary
4101 -- 4200	DC(1) -- DC(100)	Reserved for future expansion
4201 -- 4400	ND(1) -- ND(200)	Storage region for indicators and counters

TABLE 10. COMMON REGION VARIABLE LIST

Var Name	Size	Common Loc	Type	Description	Subroutine Reference
A	61	1391	C	Static lateral load at major frame synthesis cut, lb	FRMLD
AA	60	1574	C	Major frame internal axial load at synthesis segment, lb	FRMLD, SFOAWE
AC	1	2058	C	Major frame cap area (S), in.^{2}	SFOAWE
ACOU	20	641	I	Overall acoustic pressure level at synthesis cuts, db_{oa}	FCOVER, MINFR, SPRINT
ACRS	20	1101	C	Shell cross-section area at synthesis cuts, in.^{2}	GJ1GEO, BLKHDS, SPRINT
AIOY	1	1234	I	Nacelle pitch inertia (S22), lb-in.^{2}	FLDDT, DUMMY1
AIT	20	2861	C	Intermediate (secondary) longeron area at synthesis cuts, in.^{2}	FBEND, FWEIGH, SPRINT
AIWT	1	1229	I	Nacelle weight (S22), lb	FLDDT, DUMMY1
ALCL	20	1611	C	Lower cutout longeron area at synthesis cuts, in.^{2}	FBEND, FWEIGH, SPRINT
ALCU	20	1591	C	Upper cutout longeron area at synthesis cuts, in.^{2}	FBEND, FWEIGH, SPRINT
ALL	20	2821	C	Lower longeron or stringer area at synthesis cuts, in.^{2}	FBEND, FWEIGH, SPRINT
ALS	20	2841	C	Side stringer area at synthesis cuts, in.^{2}	FBEND, FWEIGH, SPRINT
ALT	1	2008	C	Vehicle altitude (S), ft	QCRIT
ALT	1	1115	I	Altitude at design cond (S22), ft	FUSLD
ALU	20	2801	C	Upper longeron or stringer area at synthesis cuts, in.^{2}	FBEND, FWEIGH, SPRINT

TABLE 10. COMMON REGION VARIABLE LIST (CONT)

Var Name	Size	Common Loc	Type	Description	Subroutine Reference
AMI	1	2054	C	Minimum cap area for major frame (S), in.^{2}	SFOAWE
ANTA	20	1141	C	Net torsional section area aft of synthesis cuts, in.^{2}	GJ1GEO, BLKHDS, SPRINT
ANTF	20	1121	C	Net torsional section area forward of synthesis cuts, in.^{2}	GJ1GEO, BLKHDS, SPRINT
AREA	1	2042	C	Area enclosed by major frame (S), in.^{2}	FRMLD
BB2	60	1818	C	Major frame cap width at segment, in.	SFOAWE
BC2	1	2062	C	Major frame cap width - intermediate step (S), in.	SFOAWE
BEN	60	1513	C	Major frame internal bending moment at synthesis segment, in.-lb	FRMLD, SFOAWE
BL	20	2321	C	Lower sector panel peripheral length at synthesis cut or at aft end of fuselage, in.	GEOMF1, CUTOUT, FCOVER, MINFR, FBEND, FWEIGH, SPRINT
BLKD	20	561	I	Pressure bulkhead indicator at shell synthesis cuts	FUSSHL, SPRINT
BM	61	1452	C	Static moment at frame synthesis cuts, in.-lb	FRMLD
BMIX	20	1151	I	Input cross-ship moment at shell synthesis cuts (inactive) (S22), in.-lb	FLDIN
BMIY	20	1131	I	Input longitudinal bending moment at shell synthesis cuts (inactive) (S22), in.-lb	FLDIN

TABLE 10. COMMON REGION VARIABLE LIST (CONT)

Var Name	Size	Common Loc	Type	Description	Subroutine Reference
BMN	20	541	I	Vertical beam indicator (currently inactive)	GJ1GEO, SPRINT
BMO	1	2044	C	Major frame moment redundant (S), in.-lb	FRMLD
BS	20	2341	C	Side sector panel peripheral length at synthesis cut or at aft end of fuselage, in.	GEOMF1, FCOVER, MINFR, FBEND, FWEIGH, SPRINT
BSTR	20	2921	C	Stringer spacing at synthesis cut, in.	LONGS, FCOVER, FBEND, FWEIGH, SPRINT
BU	20	2301	C	Upper sector panel peripheral length at synthesis cut or at aft end of fuselage, in.	GEOMF1, CUTOUT, FCOVER, MINFR, FBEND, FWEIGH, SPRINT
CGCO	20	3721	C	Center of gravity of cover within synthesis segment, in.	FWEIGH, SUMMRY
CGJS	20	3781	C	Center of gravity of joints, splices, and fasteners within synthesis segment, in.	FWEIGH, SUMMRY
CGLG	20	3741	C	Center of gravity of longitudinal members within synthesis segment, in.	FWEIGH, SUMMRY
CGMF	20	3761	C	Center of gravity of minor frames within synthesis segment, in.	FWEIGH, SUMMRY
CIND	50	241	I	Construction indicators (Refer to Table 11.)	FUSO1, MFCNTL, QCRIT, FFRME, FUSSHL, GJ1GEO, LONGS, FPANEL, FCOVER, BLKHDS, FWEIGH, SECOST, SPRINT

TABLE 10. COMMON REGION VARIABLE LIST (CONT)

Var Name	Size	Common Loc	Type	Description	Subroutine Reference
CRV	1	1049	I	Root chord of vertical tail (S21), in.	FRMEG
CTOL	20	481	I	Lower panel cutout width at shell synthesis cut, in.	CUTOUT, GJ1GEO, FBEND, FWEIGH, SPRINT
CTOS	20	501	I	Side panel cutout width at shell synthesis cut, in.	FWEIGH, SPRINT
CTOU	20	461	I	Upper panel cutout width at shell synthesis cut, in.	CUTOUT, GJ1GEO, FBEND, BLKHDS, FWEIGH, SPRINT
D	2000	1	I	Basic data array (Refer to Table 12.)	Most
DC	100	4101	-	Constant data array (currently inactive)	
DELX	20	2381	C	Shell segment length, in.	GEOMF1, INERT1, FARLD, FLDNT, CUTOUT, FWEIGH, SPRINT
DEPA	20	1261	C	Depth of torque cell immediately aft of synthesis cut, in.	GJ1GEO, BLKHDS, SPRINT
DEPF	20	1241	C	Depth of torque cell immediately forward of synthesis cut, in.	GJ1GEO, BLKHDS, SPRINT
DGW	1	1201	I	Vehicle design weight (S22), lb	FUSLD, FLDDT, DUMMY1
DI	10	311	I	Shell depth at geometry cut, in.	GEOMF1
DKHT	20	441	I	Deck height or location of shroud center or curvature as a fraction of total fuselage depth at cut	GJ1GEO, CVPRES, BLKHDS, SPRINT

TABLE 10. COMMON REGION VARIABLE LIST (CONT)

Var Name	Size	Common Loc	Type	Description	Subroutine Reference
DLS	60	3306	C	Segment length of major frame at outer mold line, in.	FRMND1, FRMLD
DLSP	60	3611	C	Segment length of major frame at neutral axis, in.	FRMND1, SFOAWE
DOO	20	2411	C	Vertical flat length from shell half-depth to corner tangent of shell exterior contour at synthesis cut or at aft end of fuselage, in.	GEOMF1, INERT1, FRMEG, FRMND1, GJ1GEO, LONGS, I1LONG, FBEND, SPRINT
E	1	2051	C	Major frame material modulus of elasticity (S), psi	SFOAWE
EISA	20	1571	C	Available side bending stiffness at synthesis cut, lb-in.^{2}	FBEND, SPRINT
EISD	20	681	I	Required side bending stiffness at synthesis cut, lb-in.^{2}	FBEND, SPRINT
EIVA	20	1551	C	Available vertical bending stiffness at synthesis cut, lb-in.^{2}	FBEND, SPRINT
EIVT	20	661	I	Required vertical bending stiffness at synthesis cut, lb-in.^{2}	FBEND, SPRINT
EQUA	160	81	I	Constants used in empirical, statistical, and analytical equations (Refer to Table 13.)	QCRIT, FCOVER, CVPRES, MINFR, FBEND, PARTIT, DBLKHD, FWEIGH, MISCWT, SECOST
EY	15	2071	C	Y-coordinate at interface, of external component, in.	FRMEG, FFRME
EZ	15	2086	C	Z-coordinate at interface of external component, in.	FRMEG, FFRME

TABLE 10. COMMON REGION VARIABLE LIST (CONT)

Var Name	Size	Common Loc	Type	Description	Subroutine Reference
FAC1	1	1106	I	Limit load to ultimate load factor (S22)	FUSLD, FLDIN, FLDDT, FLDNT
FCY	1	2047	C	Major frame material compression yield stress (S), psi	SFOAWE
FD	1	2041	C	Major frame depth (S), in.	FFRME, FRMLD, SFOAWE
FD	1	2161	C	Minor frame depth (S), in.	FUSSHL, GJ1GEO, MINFR
FFLD	580	2621	C	Major frame loads array for all vehicle conditions (Refer to Table 14.)	FFRME, FRMND1, FRMLD
FKC	1	2053	C	Major frame buckling coefficient (S)	SFOAWE
FMAX	20	2961	C	Maximum extreme fibre bending stress at synthesis cut, psi	FBEND
FMN	1	1114	I	Mach number at design condition (S22), M	FUSLD
FMN	1	2007	C	Specific mach number for flutter evaluation (S), M	QCRIT
FMP	300	3201	C	Final material property data array for synthesis (Refer to Table 15.)	LDCHK, GJ1GEO, FCOVER, CVPRES, MINFR, FBEND, BLKHDS, FWEIGH, SECOST, SPRINT
FMU	1	2050	C	Major frame material Poisson's ratio (S)	SFOAWE
FMWT	91	1910	C	Major frame detail weight array (Refer to Table 16.)	FFRME, MISCWT, SUMMRY, SPRINT
FNZO	1	1107	I	Vehicle limit vertical load factor (S22)	FUSLD, FLDDT, DUMMY1, FLDNT

TABLE 10. COMMON REGION VARIABLE LIST (CONT)

Var Name	Size	Common Loc	Type	Description	Subroutine Reference
FRMC	20	401	I	Major frame depth at synthesis cut, in.	FFRME, SPRINT
FRML	20	381	I	Frame spacing at synthesis cut, in.	FPANEL, SPRINT
FRWT	20	2941	C	Minor frame weight (each) at synthesis cut, lb	MINFR, FWEIGH
FSU	1	2048	C	Major frame material ultimate shear strength (S), psi	SFOAWE
FTU	1	2049	C	Major frame material ultimate tensile strength (S), psi	SFOAWE
GJRD	20	701	I	Required torsional stiffness at synthesis cut, lb-in.^{2}	GJ1GEO, SPRINT
HCT	1	1012	I	Horizontal tail attach type indicator S(21) 0 = shear tie 1 = shear and moment 2 = spindle	FLDDT
HIOY	1	1220	I	Pitch inertia of horizontal tail and contents about tail CG (S22), lb-in.^{2}	FLDDT, DUMMY1
HO	1	2045	C	Major frame lateral load redundant (S), lb	FRMLD
HTLG	20	421	I	Longeron position as a fraction of total fuselage depth or angular position at cut, radians	LONGS, SPRINT

TABLE 10. COMMON REGION VARIABLE LIST (CONT)

Var Name	Size	Common Loc	Type	Description	Subroutine Reference
HWT	1	1215	I	Horizontal tail and content weight (S22), lb	FLDDT, DUMMY1
I	1	4301	C	Scratch counter	
I	1	4301	C	Synthesis cut counter in calculation loop	FUSSHL, LDCHK, GJIGEO, LONGS, I1LONG, FPANEL, FCOVER, CVPRES, MINFR, FBEND, BLKHDS
IAV	1	4317	I	Vehicle type 10-19 fighters 20-29 bombers 30-39 transports	FUS01, SECOST
IC	1	4320	C	Number of major frame synthesis cuts	FFRME, FRMND1, FRMLD
ICST	1	4322	I	Construction type 1 = longeron 2 = stringer 3 = honeycomb (inactive)	FUS01, LONGS, I1LONG, FPANEL, FCOVER, MINFR, FBEND, FWEIGH, SUMMRY
IF1	1	4291	C	Loads array (S6) mass storage file counter	FUSLD, FFRME, LDCHK
IF3	1	4293	C	Material library file array (TMD) mass storage file counter	MFCNTL
IF4	1	4294	C	Material property array (TMS) mass storage file counter	MFCNTL, SFOAWE, GJ1GEO
IFF	1	4321	C	Number of major frame synthesis segments	FFRME, FRMND1, FRMLD, SFOAWE

TABLE 10. COMMON REGION VARIABLE LIST (CONT)

Var Name	Size	Common Loc	Type	Description	Subroutine Reference
IFRM	1	4324	C	Frame spacing search control 1 = first pass 2 = second pass 3 = final pass	FPANEL
II	1	4307	C	Scratch counter	FFRME, FRMND1, GJ1GEO, MINFR, FBEND
IMIL	1	4325	I	Cover milling indicator 0 = basic single thickness 1 = milled design	FUS01, FCOVER, CVPRES, MINFR
IQ	1	4319	I	Number of major frame segments per quadrant	FFRME, FRMND1, FRMLD
ISTG	1	4323	C	Stringer spacing search control 1 = first pass 2 = second pass 3 = final pass	LONGS
ITYP	1	4327	C	Vehicle class 1 = fighters 2 = bombers 3 = transports	FUS01, MISCWT, SECOST
I1	20	4341	C	Frame load source counter in FFRME, critical shear condition indicator	FFRME, LDCHK, SPRINT
I2	20	4361	C	Frame load source counter in FFRME, critical down-bending condition indicator	FFRME, LDCHK, SPRINT
I3	20	4381	C	Frame load source counter in FFRME, critical up-bending condition indicator	FFRME, LDCHK, SPRINT

TABLE 10. COMMON REGION VARIABLE LIST (CONT)

Var Name	Size	Common Loc	Type	Description	Subroutine Reference
J	1	4302	C	Scratch counter	
JJ	1	4308	C	Scratch counter	FFRME, FRMND1
K	1	4303	C	Scratch counter and stiffener spacing optimization indicator	DBLKHD, MINMUM
KC	1	4312	I	Input shell geometry type indicator 1 = input perimeter 2 = input perimeter factor	FUSO1, GEOMF1, FFRME, FUSSHL, LONGS
KK	1	4309	C	Scratch counter	FFRME, FRMND1, FRMLD
L	1	4304	C	Total number of unique major frames	FFRME
LCN	1	4314	C	Load condition counter	FUSLD, MFCNTL, MATLP1, FFRME, FRMLD, SFOAWE, LDCHK, DUMMY1

TABLE 10. COMMON REGION VARIABLE LIST (CONT)

Var Name	Size	Common Loc	Type	Description	Subroutine Reference
LDC	1	4313	I	Load condition type indicator 1 - Balanced flight with flaps up 2 - Balanced flight with flaps down 3 - Two-wheeled landing 4 - Vertical gust 5 - Lateral gust 6 - Pitching acceleration 7 - Yawing acceleration 8 - Taxi	FUSLD, FLDDT, DUMMY1
LDT	1	4316	I	Type of input loads data 1 = input (inactive) 2 = compute from component data	FUSLD
LPT	1	4318	C	Number of load points on frame	FFRME, FRMLD
M	1	4305	C	Counter for total number of unique major frames	FFRME
MATLI	1	4260	I	Component material selection number	MFCNTL, MATLF
N	1	4306	C	Scratch counter	
NC	1	4311	I	Number of shell synthesis cuts	FUS01, GEOMF1, INERT1, FUSLD, FLDIN, FLDDT, FARLD, FLDNT, FUSSHL, CUTOUT, GJ1GEO, PARTIT, FWEIGH, MISCWT, SECOST, SUMMRY, SPRINT

TABLE 10. COMMON REGION VARIABLE LIST (CONT)

Var Name	Size	Common Loc	Type	Description	Subroutine Reference
NMATL	1	4259	I	Total number of material properties in library file	MFCNTL
NOC	1	4315	C	Total number of load conditions	FUSLD, FFRME, FRMLD, SFOAWE, LDCHK
PAA	1	2057	C	Frame cap axial load from combined axial and bending load (S), lb	SFOAWE
PAX	1	2056	C	Frame cap axial load (S), lb	SFOAWE
PER	20	2541	C	Shell perimeter at synthesis cuts or at aft end of fuselage, in.	GEOMF1, INERT1, LONGS, FPANEL, MINFR, FWEIGH, MISCWT, SPRINT
PERA	20	1181	C	Torque cell peripheral length immediately aft of synthesis cut, in.	GJ1GEO, BLKHDS, SPRINT
PERF	20	1161	C	Torque cell peripheral length immediately forward of synthesis cut, in.	GJ1GEO, BLKHDS, SPRINT
PI	10	331	I	Shell perimeter, in., or perimeter correction factor at geometry cut	GEOMF1, INERT1
PRDA	20	1221	C	Deck or shroud peripheral length immediately aft of synthesis cut, in.	GJ1GEO, BLKHDS, SPRINT
PRDF	20	1201	C	Deck or shroud peripheral length immediately forward of synthesis cut, in.	GJ1GEO, BLKHDS, SPRINT
PRES	20	601	I	Pressure at synthesis cut, psi	FUSO1, FCOVER, CVPRES, BLKHDS, SPRINT

TABLE 10. COMMON REGION VARIABLE LIST (CONT)

Var Name	Size	Common Loc	Type	Description	Subroutine Reference
PSI	61	3794	C	Angles to frame synthesis cuts, deg	FRMND1, FRMLD
PYV	1	1126	I	Vertical tail lateral air load (S22), lb	FLDDT
PZBW	1	1118	I	Body lift in presence of wing (S22), lb	FLDDT, DUMMY1, FARLD
PZH	1	1123	I	Horizontal tail lift (S22), lb	FLDDT, DUMMY1
PZN	1	1116	I	Nose lift (S22), lb	FLDDT, DUMMY1, FARLD
PZWB	1	1120	I	Wing outer panel lift (S22), lb	FLDDT, DUMMY1
Q	1	2002	I/C	Dynamic pressure (S), psf	QCRIT
Q	61	3855	C	Shear flow at frame synthesis cuts, lb/in.	FRMLD
QDOT	1	1110	I/C	Vehicle pitching acceleration (S22), radians/sec^2	FUSLD, FLDDT, DUMMY1, FLDNT
RAD	20	521	I	Shroud radius at synthesis cuts, in.	GJ1GEO, SPRINT
RCL	20	2261	C	Lower sector panel radius of curvature at synthesis cuts or at aft end of fuselage, in.	GEOMF1, FCOVER, CVPRES, MINFR, FBEND, SPRINT
RCS	20	2281	C	Side sector panel radius of curvature at synthesis cuts or at aft end of fuselage, in.	GEOMF1, FCOVER, CVPRES, MINFR, FBEND, SPRINT

TABLE 10. COMMON REGION VARIABLE LIST (CONT)

Var Name	Size	Common Loc	Type	Description	Subroutine Reference
RCU	20	2241	C	Upper sector panel radius of curvature at synthesis cuts or at aft end of fuselage, in.	GEOMF1, FCOVER, CVPRES, MINFR, FBEND, SPRINT
RDNS	1	828	I	Nose radome indicator (SCST)	FWEIGH
RDTC	1	829	I	Tail radome indicator (SCST)	FWEIGH
RHO	1	2052	I/C	Major frame material density (S), lb/in.^{3}	SFOAWE
RHOF	20	621	I	Fuel density at synthesis cuts, lb/in.^{3}	FCOVER, CVPRES, BLKHDS, SPRINT
RM	16	3485	I	Material descriptive title (TMD)	MATLP1
RO	20	2481	C	Corner radius of shell exterior contour at synthesis cut or at aft end of fuselage, in.	GEOMF1, INERT1, FRMEG, FRMND1, GJ1GEO, LONGS, I1LONG, FBEND, SPRINT
RTL	20	1531	C	Net lower panel degradation due to proximity of cutout at synthesis cut, in.	CUTOUT, FBEND, SPRINT
RTU	20	1511	C	Net upper panel degradation due to proximity of cutout at synthesis cut, in.	CUTOUT, FBEND, SPRINT
S	100	2001	C	Basic scratch array	most (32 of the 46)
SCDT	80	921	I	Secondary structure descriptive data array (Refer to Table 17.)	MISCWT, SECOST, SPRINT

TABLE 10. COMMON REGION VARIABLE LIST (CONT)

Var Name	Size	Common Loc	Type	Description	Subroutine Reference
SCST	100	821	I	Secondary structure weight and center-of-gravity array (Refer to Table 18.)	FWEIGH, MISCWT, SECOST, SUMMRY, SPRINT
SCWT	50	3951	C	Secondary structure weight array (Refer to Table 19.)	SECOST, SUMMRY, SPRINT
SF	20	2401	C	Shell segment surface area, in.^{2}	GEOMF1, FWEIGH, SECOST, SPRINT
SFRM	20	2881	C	Frame spacing at synthesis cut, in.	FPANEL, FCOVER, MINFR, FBEND, FWEIGH, SPRINT
SIOY	1	1241	I	Other component or store pitch inertia (S22), lb-in.^{2}	FLDDT, DUMMY1
SSPD	1	1112	I	Vehicle sink speed at landing (S22), ft/sec	FLDDT
STKE	1	1113	I	Landing gear stroke (S22), in.	FLDDT
STNO	20	2901	C	Number of stringers or longerons	LONGS, SPRINT
STOT	1	2201	C	Total shell surface area (TOT), in.^{2}	GEOMF1
STWT	1	1236	I	Other component or store weight (S22), lb	FLDDT, DUMMY1
SUMM	100	4001	C	Weight summary array (Refer to Table 20.)	FUSO2, FUSSHL, MISCWT, SUMMRY, SPRINT

TABLE 10. COMMON REGION VARIABLE LIST (CONT)

Var Name	Size	Common Loc	Type	Description	Subroutine Reference
S1	100	2101	C	Scratch array	GEOMF1, FRMEG, FLDIN, FARLD, FLDNT, FFRME, LONGS, I1LONG, FCOVER, CVPRES, MINFR, FBEND, BLKHDS, FWEIC1
S2	20	2121	C	Scratch array	GEOMF1, FUSLD, FRMEG, FLDIN, FLDDT, FLDNT, LDCHK, FCOVER, MINFR, CVPRES, FBEND, MISCWT
S21	100	1001	I	External component geometry and coordinate array (Refer to Table 21.)	FRMEG, FLDDT, FARLD, MISCWT, SECOST, SPRINT
S22	200	1101	I	Component loads and vehicle inertia data array (Refer to Table 22.)	FUSLD, FLDIN, FLDDT, DUMMY1, FARLD, FLDNT, QCRIT
S3	20	2141	C	Scratch array	GEOMF1, FUSLD, FLDDT, FARLD, FLDNT, FCOVER, CVPRES, MINFR, FBEND
S4	20	2161	C	Scratch array	FARLD, FLDNT, FUSSHL, GJ1GEO, MINFR, FBEND
S5	20	2181	C	Scratch array	FLDNT, FCOVER, BLKHDS, DBLKHD, SECOST
S6	200	3691	C	Fuselage net loads array (Refer to Table 23.)	FUSLD, FRMEG, FLDIN, FLDDT, FLDNT, MFCNTL, FFRME, LDCHK
T	2000	2001	C	Scratch array	FUSSHL, MINFR, SPRINT
TCAP	1	2061	C	Major frame cap thickness (S), in.	SFOAWE
TCAP2	1	2063	C	Half of major frame cap thickness (S), in.	SFOAWE

TABLE 10. COMMON REGION VARIABLE LIST (CONT)

Var Name	Size	Common Loc	Type	Description	Subroutine Reference
TCC	60	1757	C	Major frame cap thickness at frame synthesis segment, in.	SFOAWE
TCF	20	2741	C	Cover flutter thickness at synthesis cut, in.	FCOVER, SPRINT
TCL	20	2661	C	Lower sector cover thickness at synthesis cut, in.	FCOVER, FBEND, FWEIGH, SPRINT
TCS	20	2641	C	Side sector cover thickness at synthesis cut, in.	FCOVER, MINFR, FBEND, FWEIGH, SPRINT
TCU	20	2621	C	Upper sector cover thickness at synthesis cut, in.	FCOVER, FBEND, FWEIGH, SPRINT
TEM2	1	2055	C	Intermediate calculation for major frames (S)	SFOAWE
TGJA	20	2781	C	Cover thickness required for torsional stiffness immediately aft of synthesis cut, in.	GJ1GEO, FWEIGH, SPRINT
TGJF	20	2761	C	Cover thickness required for torsional stiffness immediately forward of synthesis cut, in.	GJ1GEO, FWEIGH, SPRINT
TIYY	1	1206	I	Vehicle pitch inertia (22), lb-in.^{2}	FLDDT, DUMMY1
TLL	20	2721	C	Lower sector cover land thickness at synthesis cut, in.	FCOVER, FWEIGH, SPRINT
TLS	20	2701	C	Side sector cover land thickness at synthesis cut, in.	FCOVER, FWEIGH, SPRINT

TABLE 10. COMMON REGION VARIABLE LIST (CONT)

Var Name	Size	Common Loc	Type	Description	Subroutine Reference
TLU	20	2681	C	Upper sector cover land thickness at synthesis cut, in.	FCOVER, FWEIGH, SPRINT
TM	160	3501	C	Material data interpolation array (Refer to Table 24.)	MFCNTL, MATLF, MATLP1
TMD	300	3201	I	Material library file data array (Refer to Table 25.)	MFCNTL, MATLF, MATLP1
TMP	1	1105	I	Structure temperature at design load condition (S22), °F	FUSLD
TMS	120	1391	C	Material property data for components for specific load condition (Refer to Table 26.)	MFCNTL, QCRIT, SFOAWE, LDCHK, MISCWT
TOC	1	1050	C	Wing thickness to chord ratio at side of fuselage (S21)	FRMEG
TOT	20	2201	C	Total geometry and component weight for iteration cycle array (Refer to Table 27.)	GEOMF1, LONGS, FPANEL, FCOVER, MINFR, FBEND, SECOST, SPRINT
TT	24	3661	C	Material data scratch array (Refer to Table 28.)	MFCNTL, MATLF
TW	1	2059	C	Major frame web thickness for shear resistance and final thickness (S), in.	SFOAWE
TWS	1	2060	C	Major frame web thickness sized for strength (S), in.	SFOAWE

TABLE 10. COMMON REGION VARIABLE LIST (CONT)

Var Name	Size	Common Loc	Type	Description	Subroutine Reference
TWT	1	2067	C	Total major frame weight (S), lb	FFRME, SFOAWE
TWW	60	1696	C	Major frame web thickness at frame synthesis segment, in.	SFOAWE
TY	15	2041	C	Transfer term between fuselage mold line and external component interface y-coordinate, in.	FRMEG, FLDDT
TZ	15	2056	C	Transfer term between fuselage mode line and external component interface z-coordinate, in.	FRMEG, FLDDT
UIX	20	2561	C	Unit roll inertia of fuselage and contents about segment centroid, lb-in^2/lb	INERT1, SPRINT
UIY	20	2581	C	Unit pitch inertia of fuselage and contents about segment centroid, lb-in.^{2}/lb	INERT1, DUMMY1, FLDNT, SPRINT
UIZ	20	2601	C	Unit yaw inertia of fuselage and contents about segment centroid, lb-in.^{2}/lb	INERT1, SPRINT
V	61	3916	C	Static vertical load at major frame synthesis cut, lb	FRMLD
VCT	1	1017	I	Vertical tail attach type indicator (S21) 0 = shear tie 1 = shear and moment tie 2 = spindle	FLDDT

TABLE 10. COMMON REGION VARIABLE LIST (CONT)

Var Name	Size	Common Loc	Type	Description	Subroutine Reference
VIOY	1	1227	I	Pitch inertia of vertical tail and contents about tail CG (S22), lb-in.^{2}	FLDDT, DUMMY1
VIZ	20	1171	I	Net input vertical shear (inactive) (S22), lb	FLDIN
VO	1	2046	C	Major frame vertical load redundant (S), lb	FRMLD
VOL	20	2421	C	Shell segment volume, in.^{3}	GEOMF1, SPRINT
VOLT	1	2202	C	Total shell volume (TOT), in.^{3}	GEOMF1
VV	60	1635	C	Major frame internal shear load at synthesis segment, lb	FRMLD, SFOAWE
VWT	1	1222	I	Vertical tail and content weight (S22), lb	FLDDT, DUMMY1
WCT	1	1007	I	Wing attach type indicator (S21) 0 = shear tie 1 = shear and moment tie	FLDDT
WFC	20	1251	I	Weight of fuselage contents within segment (S22), lb	FUSLD, DUMMY1, FLDNT
WFUS	20	1271	I	Weight of fuselage within segment (S22), lb	FUSLD, DUMMY1, FLDNT
WI	10	321	I	Shell width at geometry cut, in.	GEOMF1
WIDA	20	1301	C	Width of torque cell between two walls immediately aft of synthesis cut, in.	GJ1GEO, BLKHDS, SPRINT

TABLE 10. COMMON REGION VARIABLE LIST (CONT)

Var Name	Size	Common Loc	Type	Description	Subroutine Reference
WIDF	20	1281	C	Width of torque cell between two walls immediately forward of synthesis cut, in.	GJ1GEO, BLKHDS, SPRINT
WIOY	1	1213	I	Pitch inertia of wing and contents about wing CG (S22), lb-in.^{2}	FLDDT, DUMMY1
WLCL	20	1651	C	Weight of lower cutout longeron within shell segment, lb	FWEIGH, SUMMRY, SPRINT
WLCU	20	1631	C	Weight of upper cutout longeron within shell segment, lb	FWEIGH, SUMMRY, SPRINT
WO	20	2461	C	Horizontal flat length from centerline to corner tangent of shell exterior contour at synthesis cut or at aft end of fuselage, in.	GEOMF1, INERT1, FRMEG, FRMND1, GJ1GEO, I1LONG, FBEND, SPRINT
WTBK	20	3931	C	Weight of pressure bulkheads, lb	FUSSHL, BLKHDS, SUMMRY, SPRINT
WTCL	20	3541	C	Weight of lower sector cover panel within shell segment, lb	FWEIGH, SUMMRY, SPRINT
WTCS	20	3521	C	Weight of side sector cover panel within shell segment, lb	FWEIGH, SUMMRY, SPRINT
WTCT	20	3561	C	Weight of all cover panels within shell segment, lb	PARTIT, FWEIGH, SPRINT
WTCU	20	3501	C	Weight of upper sector cover panel within shell segment, lb	FWEIGH, SUMMRY, SPRINT
WTF	1	2064	C	Major frame cap weight (S), lb	FFRME, SFOAWE

TABLE 10. COMMON REGION VARIABLE LIST (CONT)

Var Name	Size	Common Loc	TYPE	Description	Subroutine Reference
WTJS	20	3701	C	Weight of joints splices and fasteners within shell segment, lb	FWEIGH, SUMMRY, SPRINT
WTLL	20	3621	C	Weight of lower sector stringers or longerons within shell segment, lb	FWEIGH, SUMMRY, SPRINT
WTLS	20	3601	C	Weight of side sector stringers within shell segment, lb	FWEIGH, SUMMRY, SPRINT
WTLT	20	3661	C	Weight of all longitudinal members within shell segment, lb	FWEIGH, SPRINT
WTLU	20	3581	C	Weight of upper sector stringers or longerons within shell segment, lb	FWEIGH, SUMMRY, SPRINT
WTMF	20	3681	C	Weight of minor frames within shell segment, lb	PARTIT, FWEIGH, SUMMRY, SPRINT
WTPT	20	3821	C	Weight of partitions within shell segment, lb	PARTIT, SUMMRY, SPRINT
WTST	1	2066	C	Major frame stiffener weight (S), lb	FFRME, SFOAWE
WTST	20	3641	C	Weight of secondary longitudinal members within shell segment, lb	FWEIGH, SUMMRY, SPRINT
WTW	1	2065	C	Major frame web weight (S), lb	FFRME, SFOAWE
WWT	1	1208	I	Wing and content weight (S22), lb	FLDDT, DUMMY1

TABLE 10. COMMON REGION VARIABLE LIST (CONT)

Var Name	Size	Common Loc	Type	Description	Subroutine Reference
XACG	1	1230	I	X-coordinate of nacelle and content CG (S22), in.	FLDDT, DUMMY1
XAPX	1	1109	I	X-coordinate of wing leading edge apex (S22), in.	FARLD
XBAR	20	2361	C	X-centroid of shell segment, in.	GEOMF1, INERT1, DUMMY1, FARLD, FLDNT, FWEIGH, SUMMRY, SPRINT
XCG	1	1202	I	X-coordinate of vehicle CG (S22), in.	FUSLD, FLDDT, DUMMY1, FLDNT
XCPB	1	1119	I	X-coordinate of body lift in presence of wing (S22), in.	FLDDT, DUMMY1, FARLD
XCPH	1	1124	I	X-coordinate of horizontal tail lift (S22), in.	FLDDT, DUMMY1
XCPN	1	1117	I	X-coordinate of nose lift (S22), in.	FLDDT, DUMMY1, FARLD
XCPV	1	1127	I	X-coordinate of vertical tail lateral air load (S22), in.	FLDDT
XCPW	1	1121	I	X-coordinate of wing outer panel lift (S22), in.	FLDDT, DUMMY1
XHCG	1	1216	I	X-coordinate of horizontal tail and content CG (S22), in.	FLDDT, DUMMY1
XHFS	1	1008	I	X-coordinate of horizontal tail front spar support frame (S21), in.	FRMEG, FLDDT, MISCWT
XHRS	1	1009	I	X-coordinate of horizontal tail rear spar support frame (S21), in.	FRMEG, FLDDT, MISCWT
XI	10	291	I	X-coordinate of shell geometry cut, in.	GEOMF1, FARLD, SECOST

TABLE 10. COMMON REGION VARIABLE LIST (CONT)

Var Name	Size	Common Loc	Type	Description	Subroutine Reference
XMGD	1	1034	I	X-coordinate of main gear drag strut frame (S21), in.	FRMEG, FLDDT
XMGG	1	1032	I	X-coordinate of main gear tires (S21), in.	FLDDT
XMGT	1	1033	I	X-coordinate of main gear trunnion frame (S21), in.	FRMEG, FLDDT
XNFS	1	1018	I	X-coordinate of nacelle forward support frame (S21), in.	FRMEG, FLDDT, MISCWT
XNGD	1	1028	I	X-coordinate of nose gear drag strut frame (S21), in.	FRMEG, FLDDT
XNGG	1	1026	I	X-coordinate of nose gear tires (S21), in.	FLDDT
XNGT	1	1027	I	X-coordinate of nose gear trunnion frame (S21), in.	FRMEG, FLDDT
XNRS	1	1019	I	X-coordinate of nacelle rear support frame (S21), in.	FRMEG, FLDDT, MISCWT
XO	20	361	I	X-coordinate of fuselage synthesis cut or aft end of fuselage, in.	GEOMF1, INERT1, FUSLD, FRMEG, FARLD, FLDNT, FRMND1, CVPRES, BLKHDS, FWEIGH, MISCWT, SUMMRY, SPRINT
XOFS	1	1022	I	X-coordinate of other component (store) forward support frame (S21), in.	FRMEG, FLDDT, MISCWT
XORS	1	1023	I	X-coordinate of other component (store) rear support frame (S21), in.	FRMEG, FLDDT, MISCWT

TABLE 10. COMMON REGION VARIABLE LIST (CONT)

Var Name	Size	Common Loc	Type	Description	Subroutine Reference
XST	1	1237	I	X-coordinate of other component (store) CG (S22), in.	FLDDT, DUMMY1
XVCG	1	1223	I	X-coordinate of vertical tail and content CG (S22), in.	FLDDT, DUMMY1
XVFS	1	1013	I	X-coordinate of vertical tail front spar support frame (S21), in.	FRMEG, FLDDT, MISCWT
XVRS	1	1014	I	X-coordinate of vertical tail rear spar support frame (S21), in.	FRMEG, FLDDT, MISCWT
XWCG	1	1209	I	X-coordinate of wing and content CG (S22), in.	FLDDT, DUMMY1
XWFS	1	1002	I	X-coordinate of wing front spar support frame (S21), in.	FRMEG, FLDDT, MISCWT
XWIS	1	1004	I	X-coordinate of wing intermediate spar support frame (S21), in.	FRMEG, FLDDT, MISCWT
XWRS	1	1003	I	X-coordinate of wing rear spar support frame (S21), in.	FRMEG, FLDDT, MISCWT
Y	61	3672	C	Y-coordinate of major frame cuts at mold line, in.	FRMND1, FRMLD
YACG	1	1231	I	Y-coordinate of nacelle and content CG (S22), in.	FLDDT
YB	60	1101	C	Y-centroid of major frame segment at mold line, in.	FRMND1, FRMLD
YCPH	1	1125	I	Y-coordinate of horizontal tail panel CP (S22), in.	FLDDT

TABLE 10. COMMON REGION VARIABLE LIST (CONT)

Var Name	Size	Common Loc	Type	Description	Subroutine Reference
YCPW	1	1122	I	Y-coordinate of wing outer panel CP (S22), in.	FLDDT
YE	6	3201	C	Y-coordinate of external loads at frame mold line, in.	FFRME, FRMLD
YHCG	1	1217	I	Y-coordinate of horizontal tail and content CG (S22), in.	FLDDT
YHSF	1	1010	I	Y-coordinate of horizontal tail-fuselage interface (S21), in.	FRMEG, FLDDT
YMGG	1	1035	I	Y-coordinate of main gear tires (S21), in.	FLDDT
YMGS	1	1036	I	Y-coordinate of main gear strut-fuselage interface (S21), in.	FRMEG, FLDDT
YNGS	1	1030	I	Y-coordinate of nose gear strut-fuselage interface (S21), in.	FRMEG
YNSF	1	1020	I	Y-coordinate of nacelle pylon-fuselage interface (S21), in.	FRMEG, FLDDT
YOSF	1	1024	I	Y-coordinate of other component pylon-fuselage interface (S21), in.	FRMEG, FLDDT
YP	61	3367	C	Y-coordinate of major frame neutral axis at cuts, in.	FRMLD
YPB	60	3489	C	Y-centroid of major frame segment at neutral axis, in.	FRMLD

TABLE 10. COMMON REGION VARIABLE LIST (CONT)

Var Name	Size	Common Loc	Type	Description	Subroutine Reference
YST	1	1238	I	Y-coordinate of other component (store) CG (S22), in.	FLDDT
YVSF	1	1015	I	Y-coordinate of vertical tail-fuselage interface (S21), in.	FRMEG, FLDDT
YWCG	1	1210	I	Y-coordinate of wing and content CG (S22), in.	FLDDT
YWSF	1	1005	I	Y-coordinate of wing-fuselage interface (S21), in.	FRMEG, FLDDT
Z	61	3733	C	Z-coordinate of major frame cuts at mold line, in.	FRMND1, FRMLD
ZACG	1	1232	I	Z-coordinate of nacelle and content CG (S22), in.	FLDDT, DUMMY1
ZB	60	3245	C	Z-centroid of major frame segment at mold line, in.	FRMND1, FRMLD
ZCG	1	1204	I	Z-coordinate of vehicle CG (S22), in.	FLDDT, DUMMY1, FLDNT
ZCPV	1	1128	I	Z-coordinate of vertical tail CP (S22), in.	FLDDT
ZE	6	3207	C	Z-coordinate of external loads at frame mold line, in.	FFRME, FRMLD
ZHCG	1	1218	I	Z-coordinate of horizontal tail and content CG (S22), in.	FLDDT, DUMMY1
ZHSF	1	1011	I	Z-coordinate of horizontal tail-fuselage interface (S21), in.	FRMEG

TABLE 10. COMMON REGION VARIABLE LIST (CONT)

Var Name	Size	Common Loc	Type	Description	Subroutine Reference
ZI	10	301	I	Z-coordinate of section at shell geometry cut, in.	GEOMF1
ZMGS	1	1037	I	Z-coordinate of main gear strut-fuselage interface (S21), in.	FRMEG
ZNGS	1	1031	I	Z-coordinate of nose gear strut-fuselage interface (S21), in.	FRMEG
ZNSF	1	1021	I	Z-coordinate of nacelle pylon-fuselage interface (S21), in.	FRMEG
ZO	20	2221	C	Z-coordinate of section centroid at synthesis cut or at aft end of fuselage, in.	GEOMF1, FRMEG, DUMMY1, FLDNT, SPRINT
ZOSF	1	1025	I	Z-coordinate of other component pylon-fuselage interface (S21), in.	FRMEG
ZP	61	3428	C	Z-coordinate of major frame neutral axis at cuts, in.	FRMLD
ZPB	60	3550	C	Z-centroid of major frame segment at neutral axis, in.	FRMLD
ZST	1	1239	I	Z-coordinate of other component (store) CG (S22), in.	FLDDT, DUMMY1
ZVCG	1	1225	I	Z-coordinate of vertical tail and content CG (S22), in.	FLDDT, DUMMY1
ZVSF	1	1016	I	Z-coordinate of vertical tail-fuselage interface (S21), in.	FRMEG, FLDDT

TABLE 10. COMMON REGION VARIABLE LIST (CONCL)

Var Name	Size	Common Loc	Type	Description	Subroutine Reference
ZWCG	1	1211	I	Z-coordinate of wing and content CG (S22), in.	FLDDT, DUMMY1
ZWSF	1	1006	I	Z-coordinate of wing-fuselage interface (S21), in.	FRMEG
ZZS	1	2043	C	Z-centroid of frame (S), in.	FRMLD

TABLE 11. CIND ARRAY VARIABLES

Loc	Variable Name	Description	Subroutine Reference[a]
1	IAV	Vehicle 11 - 20 = fighters and attack 21 - 30 = bombers 31 = transports for wheeled vehicles heavier than 100K 32 = transports for wheeled vehicles lighter than 100K 33 = transports for bulk cargo heavier than 100K 34 = transports for bulk cargo lighter than 100K 35 = transports for personnel heavier than 100K 36 = transports for personnel lighter than 100K	FUSO1
2	NC	Number of shell synthesis cuts	FUSO1
3	KC	Perimeter or perimeter correction factor indicator 1 = perimeter input 2 = perimeter correction factor input	FUSO1
4	ICST	Construction indicator 1 = longeron construction 2 = stringer construction 3 = honeycomb construction (inactive)	FUSO1
5	IMIL	Cover mill indicator 0 = cover not milled 1 = cover milled (lands at frames and longerons)	FUSO1, FCOVER
6		Cover material identification number	MFCNTL
7		Longeron material identification number	MFCNTL

TABLE 11. CIND ARRAY VARIABLES (CONT)

Loc	Variable Name	Description	Subroutine Reference[a]
8		Major frame material identification number	MFCNTL
9		Minor frame and bulkhead material identification number	MFCNTL
10		Not used	
11		Number of primary longerons (ICST = 1)	LONGS
12		Number of secondary longerons (ICST = 1)	LONGS
13		General longeron location for all cuts positive value = fraction of total depth negative value = angular location, radians	LONGS
14		Shroud radii indicator 1 = single shroud 2 = double shroud	GJ1GEO
15		Stringer spacing indicator 0 = search on stringer spacing positive value = fixed spacing at value, in.	LONGS
16	FD	General frame depth for both major and minor frames, in.	FFRME, FUSSHL
17		General frame spacing indicator positive value <1,000 = search on spacing, in. positive value >1,000 = fixed at value less 1,000, in. plus 1,000.	FPANEL
18		Not used	

TABLE 11. CIND ARRAY VARIABLES (CONT)

Loc	Variable Name	Description	Subroutine Reference[a]
18 • 20		Not used Not used	
21		Mach number for critical panel flutter, M	QCRIT, FCOVER, SECOST
22		Altitude that corresponds to critical mach number, ft	QCRIT
23		Dynamic pressure that corresponds to critical mach number, psf	QCRIT, FCOVER
24		Cover modulus of elasticity at critical flutter condition, $lb/in.^2$	QCRIT, FCOVER
25		Function of mach number for critical panel flutter	QCRIT, FCOVER
26		Maximum sea-level speed, M	QCRIT, SECOST
27		Maximum dynamic pressure, psf	QCRIT, SECOST
28		Maximum limit cabin pressure differential, psi	FUSO1, SECOST
29		Flutter correction factor for boundary layer growth effect Loaded value = 0.663265	FCOVER
30		Not used	
31		Cover index factor, lb/lb	FWEIGH
32		Longeron index factor, lb/lb	FWEIGH
33		Joints splices and fasterners index factor, lb/lb	FWEIGH
34		Minor frame index factor, lb/lb	FWEIGH

TABLE 11. CIND ARRAY VARIABLES (CONCL)

Loc	Variable Name	Description	Subroutine Reference[a]
35		Major frame index factor, lb/lb	FFRME
36		Pressure bulkhead index factor, lb/lb	BLKHDS
37		Not used	
•			
50		Not used	

NOTE: CIND array starts at common location 241.

[a]Variables in this array are printed in subroutine SPRINT.

TABLE 12. D ARRAY CONSTANTS AND EQUATION PARAMETERS

Loc	Value	Description	Subroutine Reference[a]
1	1.0	Constant	
2	2.0	Constant	
3	3.0	Constant	
4	4.0	Constant	
5	5.0	Constant	
6	6.0	Constant	
7	7.0	Constant	
8	8.0	Constant	
9	9.0	Constant	
10	10.0	Constant	
11	11.0	Constant	
12	12.0	Constant	
13	20.0	Constant	
14	1000.0	Constant	
15	3.141593	Constant, π	
16	0.01745324	Constant, $\pi/180$	
17	144.0	Constant	
18	24.0	Constant	
19	0.5	Constant	

TABLE 12. D ARRAY CONSTANTS AND EQUATION PARAMETERS (CONT)

Loc	Value	Description	Subroutine Reference[a]
20	1.5	Constant	
21	0.3333333	Constant	
22	0.95	Constant	
23	0.25	Constant	
24	0.0	Constant	
25	1.414214	Constant, $\sqrt{2}$	
26	32.17405	Constant, acceleration of gravity, ft/sec^2	FLDDT, DUMMY, FLDNT CVPRES, BLKHDS
27	180.0	Constant, deg	
28	1.732051	Constant, $\sqrt{3}$	
29	2.5	Maximum land thickness to field thickness ratio	CVPRES, DBLKHD
30	1.333333	Additional factor of safety for pressurization of manned compartments	CVPRES, BLKHDS, SECOST
31		Not used	
32		Not used	
33	0.5	Stringer spacing and bulkhead stiffener spacing search increment, in.	LONGS, DBLKHD
34	0.5	Frame spacing search increment, in.	LONGS
35	0.25	Maximum frame spacing as a fraction of shell diameter	FPANEL

TABLE 12. D ARRAY CONSTANTS AND EQUATION PARAMETERS (CONT)

Loc	Value	Description	Subroutine Reference[a]
36	4.0	Minimum number of stringers	LONGS
37	4.0	Minimum stringer spacing	LONGS
38	1.5	Standard factor of safety	CVPRES, BULKHDS, SECOST
39		Not used	
40	0.0000625	Frame stability coefficient	MINFR
41	5.0	Number of frame segments per quadrant (15 maximum)	FFRME
42	0.426	Flange crippling coefficient, one edge free	SFOAWE
43	4.0	Flange crippling coefficient, edges fixed	FBEND
44	7.5	Shear crippling coefficient for flat panels	SFOAWE, FCOVER
45		Not used	
46	0.9	Reduction factor for frame cap compression yield allowable	SFOAWE
47	0.75	Rivet factor for covers	FCOVER
48	0.005	One gage increment to webs for frame stiffeners, in.	SFOAWE
49	2.0	Land width for frame attachment, in.	FCOVER, FWEIGH
50	2.0	Land width for longeron attachment, in.	FCOVER, FWEIGH

TABLE 12. D ARRAY CONSTANTS AND EQUATION PARAMETERS (CONT)

Loc	Value	Description	Subroutine Reference[a]
51	0.050	Minimum land thickness for cover, in.	FCOVER
52	0.032	Minimum field thickness for cover, in.	FCOVER
53	0.145	Minimum longeron or stinger area, in.^{2}	MINFR, FBEND
54	0.050	Minimum major frame cap thickness, in.	SFOAWE
55	0.032	Minimum major frame web thickness, in.	SFOAWE
56	1.0	Minimum major frame flange width, in.	SFOAWE
57	0.05	Minimum minor frame cap thickness, in.	MINFR
58	0.025	Minimum stiffener web thickness, in.	DBLKHD
59	1.0	Minor frame cap width, in.	MINFR
60	0.9	Reduction factor for extreme fibre bending stress allowable	FBEND
61	0.875	Stringer or longeron height (initial value), in.	FBEND
62	0.3263434	Stringer inner flange to height ratio	FBEND
63	0.050	Minimum bulkhead equivalent thickness, in.	BLKHDS
64		Not used	
•			
75		Not used	
76	1.25	Frame cap thickness correction for single-thickness panel acoustic fatigue design	MINFR

TABLE 12. D ARRAY CONSTANTS AND EQUATION PARAMETERS (CONCL)

Loc	Value	Description	Subroutine Reference[a]
77	1.0794	Constant in curvature correction equation for acoustic fatigue	MINFR, FCOVER
78	0.000143	Constant in curvature correction equation for acoustic fatigue	MINFR, FCOVER
79	0.076475	Constant in curvature correction equation for acoustic fatigue	MINFR, FCOVER
80	0.29969	Constant in curvature correction equation for acoustic fatigue	MINFR, FCOVER
81 • 2000		Locations 81 through 2,000 are used for arrays and variables which are defined elsewhere in this report	

NOTE: D array starts at common location 1.

[a]Numerical constants are used throughout the program and, therefore, subroutine usage is not referenced.

TABLE 13. EQUA ARRAY CONSTANTS AND EQUATION PARAMETERS

Loc	Value	Description	Subroutine Reference
1	1479.757	Constant for calculation of dynamic pressure below 20K ft	QCRIT
2	52.187	Constant for calculation of dynamic pressure below 20K ft	QCRIT
3	0.619858	Constant for calculation of dynamic pressure below 20K ft	QCRIT
4	1465.175	Constant for calculation of dynamic pressure between 20K and 70K ft	QCRIT
5	50.76695	Constant for calculation of dynamic pressure between 20K and 70K ft	QCRIT
6	0.6434412	Constant for calculation of dynamic pressure between 20K and 70K ft	QCRIT
7	0.002907194	Constant for calculation of dynamic pressure between 20K and 70K ft	QCRIT
8	199.659	Constant for calculation of dynamic pressure above 70K ft	QCRIT
9	0.4851674	Constant for calculation of flutter parameter, function of mach number	QCRIT
10	1.166456	Constant for calculation of flutter parameter, function of mach number	QCRIT
11	0.488412	Constant for calculation of flutter parameter, function of mach number	QCRIT
12	0.4037203	Constant for calculation of flutter parameter, function of mach number	QCRIT
13	1.4	Constant for calculation of flutter parameter, function of mach number, M	QCRIT

TABLE 13. EQUA ARRAY CONSTANTS AND EQUATION PARAMETERS (CONT)

Loc	Value	Description	Subroutine Reference
14	0.6	Constant for calculation of flutter parameter, function of mach number, M	QCRIT
15	0.4849271	Constant for calculation of flutter parameter, function of mach number	QCRIT
16	0.5551841	Constant for calculation of cover flutter thickness parameter	FCOVER
17	0.1686944	Constant for calculation of cover flutter thickness parameter	FCOVER
18	0.02169992	Constant for calculation of cover flutter thickness parameter	FCOVER
19	0.000963694	Constant for calculation of cover flutter thickness parameter	FCOVER
20	0.113	Exponent in approximation of shear crippling coefficient	FCOVER
21	9.0	Constant in approximation of shear crippling coefficient	FCOVER
22	0.522	Exponent in approximation of shear crippling coefficient	FCOVER
23	2.9×10^{-9}	Constant, acoustic pressure reference, psi	FCOVER, MINFR
24	2.620	Cover thickness correlation constant for acoustic fatigue, in./in.	FCOVER
25	5.620	Frame thickness correlation constant for acoustic fatigue, in./$\sqrt{\text{in.}}$	MINFR
26	0.6	Cover field thickness to land thickness ratio for acoustic fatigue, in./in.	FCOVER

TABLE 13. EQUA ARRAY CONSTANTS AND EQUATION PARAMETERS (CONT)

Loc	Value	Description	Subroutine Reference
27	1.646	Panel thickness at edge equation constant for pressure loading	CVPRES, DBLKHD
28	0.894	Panel thickness at edge equation constant for pressure loading	CVPRES, DBLKHD
29	0.394	Panel thickness at edge equation constant for pressure loading	CVPRES, DBLKHD
30	1.288	Panel thickness at edge equation constant for pressure loading	CVPRES, DBLKHD
31	1.3769	Panel thickness at midspan equation constant for pressure loading	CVPRES, DBLKHD
32	2.484	Panel thickness at midspan equation constant for pressure loading	CVPRES, DBLKHD
33	1.984	Panel thickness at midspan equation constant for pressure loading	CVPRES, DBLKHD
34	4.467	Panel thickness at midspan equation constant for pressure loading	CVPRES, DBLKHD
35	0.1443	Constant for first approximation of tension field angle, radians	MINFR
36	0.175622	Constant for first approximation of tension field angle	MINFR
37	0.013411	Constant for first approximation of tension field angle	MINFR
38	1.2	Constant for maximum to average induced stress ratio	MINFR, FBEND
39	1.0	Constant for maximum to average induced stress ratio	MINFR, FBEND

TABLE 13. EQUA ARRAY CONSTANTS AND EQUATION PARAMETERS (CONT)

Loc	Value	Description	Subroutine Reference
40	0.78	Constant for maximum to average induced stress ratio	MINFR, FBEND
41	0.650	Constant for maximum to average induced stress ratio	MINFR, FBEND
42	151.586	Curvature limit for determination of forced crippling allowable, in.	MINFR, FBEND
43	0.18695	Constant for calculation of forced crippling allowable	MINFR, FBEND
44	5.88	Constant for calculation of forced crippling allowable	MINFR, FBEND
45	0.002	Constant for calculation of forced crippling allowable	MINFR, FBEND
46	0.00075238	Constant for calculation of forced crippling allowable	MINFR, FBEND
47		Not used	
48	0.16	Constant for calculation of cover compressive crippling stress	FBEND
49	0.85	Constant for effective post-buckled cover width	FBEND
50	761.182	Conversion factor, mach number to miles per hour at sea level	SECOST
51	0.125	Maximum stiffener bending moment constant	DBLKHD
52	0.312	Flange crippling coefficient of stiffener with one edge free	DBLKHD

TABLE 13. EQUA ARRAY CONSTANTS AND EQUATION PARAMETERS (CONT)

Loc	Value	Description	Subroutine Reference
53	0.44444	Exponent for stiffener thickness calculation	DBLKHD
54	224.0	Constant for stiffener thickness calculation	DBLKHD
55	0.6667	Exponent for stiffener thickness calculation	DBLKHD
56	2.0	Minimum stiffener spacing for bulkhead sizing, in.	DBLKHD
57	12.0	Maximum stiffener spacing for bulkhead sizing, in.	DBLKHD
58	1.1	Land width to bulkhead stiffener cap width ratio, in./in.	BDLKHD
59	1.0	Minimum bulkhead stiffener cap width, in.	DBLKHD
60	10.0	Maximum bulkhead stiffener height, in.	DBLKHD
61	215.0	Rule-of-thumb estimate of pilot's canopy, lb	SECOST
62	215.0	Rule-of-thumb estimate of navigator's canopy, lb	SECOST
63	1.69	Canopy weight calculation parameter, lb/in.	SECOST
64	0.0026	Canopy weight calculation parameter, ft^2/in.	SECOST
65	2.158	Canopy weight calculation parameter, lb/in.	SECOST
66	1480.0	Canopy weight calculation parameter, psf	SECOST
67	10500.0	Ultimate tensile strength of windshield material, psi	SECOST

TABLE 13. EQUA ARRAY CONSTANTS AND EQUATION PARAMETERS (CONT)

Loc	Value	Description	Subroutine Reference
68	0.23	Constant for windshield thickness to resist bird strike, in.	SECOST
69	0.348	Constant for windshield thickness to resist bird strike	SECOST
70	0.102587	Density and framing factor for windshield and windows, $lb/in.^3$	SECOST
71	0.0525	Constant for windshield or window maximum bending moment	SECOST
72	0.0025	Constant for windshield or window maximum bending moment	SECOST
73	157.4	Constant for windshield thickness to resist bird strike, mph	SECOST
74	0.250	Minimum windshield panel thickness, in.	SECOST
75	80.0	Rule-of-thumb estimate for fighter and attack vehicle windshield, lb	SECOST
76	640.0	Rule-of-thumb estimate for bomber and transport windshields, lb	SECOST
77	250.0	Rule-of-thumb estimate for transport windshields, lb	SECOST
78	125.0	Rule-of-thumb estimate for transport windshields, lb	SECOST
79	0.175	Density and framing factor for cabin windows, $lb/in.^3$	SECOST
80	10.0	Rule-of-thumb estimate of cabin windows, each, lb	SECOST

TABLE 13. EQUA ARRAY CONSTANTS AND EQUATION PARAMETERS (CONT)

Loc	Value	Description	Subroutine Reference
81	14.0	Rule-of-thumb estimate of flooring per crewmember on fighters, lb	SECOST
82	2.21	Unit weight of crew flooring and supports, psf	SECOST
83	6.0	Constant for crew flooring estimate on transports and bombers, in.	SECOST
84	1.5	Constant for crew flooring estimate on transports and bombers	SECOST
85	24.0	Constant for crew flooring estimate on transports and bombers, lb	SECOST
86	8.0	Rule-of-thumb estimate of stairways and ladders on fighters, lb	SECOST
87	8.0	Constant for stairways and ladders on transports and bombers, lb	SECOST
88	9.0	Constant for stairways and ladders on transports and bombers, lb/ft	SECOST
89	11.45	Constant for stairways and ladders on transports and bombers, ft	SECOST
90	2.76	Unit weight of nose radome on supersonic vehicles, psf	SECOST
91	2.76	Unit weight of tail radomes on supersonic vehicles, psf	SECOST
92	1.75	Unit weight of radomes on subsonic vehicles, psf	SECOST
93	2.35	Speed brake panel unit weight parameter, psf	SECOST

TABLE 13. EQUA ARRAY CONSTANTS AND EQUATION PARAMETERS (CONT)

Loc	Value	Description	Subroutine Reference
94	0.00306	Speed brake panel unit weight parameter, (psf)/(1,000 in.-lb)	SECOST
95	1.3	Speed brake support structure factor	SECOST
96	0.8	Speed brake panel aspect ratio approximation, in./in.	SECOST
97	5.3	Unit weight of main landing gear doors, psf	SECOST
98	5.0	Unit weight of nose landing gear doors, psf	SECOST
99	2.9	Unit weight of aft cargo doors, psf	SECOST
100	9.5	Unit weight of side cargo doors, psf	SECOST
101		Not used	
102	12.21	Unit weight of cargo loading ramps, psf	SECOST
103	0.933	Cargo loading ramp unit weight parameter, lb/ft^3	SECOST
104	4.0	Unit weight of ramp toe/extension, psf	SECOST
105	5.5	Unit weight of internal pressure door, psf	SECOST
106	2.50	Internal pressure door locks, hinges, and misc factor	SECOST

TABLE 13. EQUA ARRAY CONSTANTS AND EQUATION PARAMETERS (CONT)

Loc	Value	Description	Subroutine Reference
107	1.55	Basic weapons bay door unit weight parameter, psf	SECOST
108	0.0009	Basic weapons bay door unit weight parameter	SECOST
109	1.3	Sliding weapons bay door weight factor	SECOST
110	1.7	Single-hinged weapons bay door weight factor	SECOST
111	1.9	Double-hinged weapons bay door weight factor	SECOST
112	15.0	Gun access door weight per gun, lb/gun	SECOST
113	0.020	Ammunition access door weight per round, lb/round	SECOST
114	170.0	Rule-of-thumb estimate of flight emergency exists on fighters and bombers, lb/man	SECOST
115	19.5	Unit weight of flight emergency exits on fighters and bombers, psf	SECOST
116	19.5	Unit weight of flight emergency exits on transports, psf	SECOST
117	10.0	Unit weight of ground emergency exits on transports and bombers, psf	SECOST
118	48.0	Rule-of-thumb estimate of push-out doors on transports, lb/dr	SECOST
119	24.0	Rule-of-thumb estimate of plug-type doors on transports, lb/dr	SECOST

TABLE 13. EQUA ARRAY CONSTANTS AND EQUATION PARAMETERS (CONT)

Loc	Value	Description	Subroutine Reference
120		Not used	
121	230.0	Rule-of-thumb estimate for each paratroop door, lb/dr	SECOST
122	11.0	Unit weight of paratroop door, psf	SECOST
123	10.0	Rule-of-thumb estimate for each paratroop spoiler deflector, lb/dr	SECOST
124	120.0	Rule-of-thumb estimate of entrance door, lb/dr	SECOST
125	10.0	Unit weight of entrance door, psf	SECOST
126	794.495	Miscellaneous access door parameter for fighters and bombers	SECOST
127	2067.32	Miscellaneous access door parameter for fighters and bombers	SECOST
128	10.45	Miscellaneous access door parameter for transports	SECOST
129	0.28	Miscellaneous access door parameter for transports	SECOST
130	10.0	Rule-of-thumb estimate of probe-type in-flight refueling, lb	SECOST
131	100.0	Rule-of-thumb estimate of boom-type in-flight refueling, lb	SECOST
132	25.0	Rule-of-thumb estimate of ram-air turbine door, lb	SECOST

TABLE 13. EQUA ARRAY CONSTANTS AND EQUATION PARAMETERS (CONT)

Loc	Value	Description	Subroutine Reference
133	5.0	Unit weight of ram-air turbine door, psf	SECOST
134	2.93	Unit weight of engine removal door, psf	SECOST
135	5.0	Engine clearance constant for engine removal door, in.	SECOST
136	2.5	Unit weight of accessory access door, psf	SECOST
137	2.5	Unit weight of thermal protection panel, psf	SECOST
138	2.2	Unit weight of main landing gear pod, psf	SECOST
139	1.5	Unit weight of miscellaneous fairings, psf	SECOST
140	0.5	Unit weight of miscellaneous fairings, lb/in.	SECOST
141	0.1	Unit weight of walkways, steps, and grips, lb/in.	SECOST
142	0.035	Unit weight of antiskid protection, lb/in.	SECOST
143	0.026	Unit weight of exterior finish, psf	SECOST
144	0.050	Unit weight of interior finish, psf	SECOST
145	0.66	Exponent for cargo floor width parameter	SECOST

TABLE 13. EQUA ARRAY CONSTANTS AND EQUATION PARAMETERS (CONT)

Loc	Value	Description	Subroutine Reference
146	4.8	Unit weight parameter for wheeled vehicle floor, psf	SECOST
147	3.3	Unit weight parameter for bulk cargo floor, psf	SECOST
148	2.27	Unit weight parameter for passenger floor, psf	SECOST
149	14.16	Cargo floor width parameter	SECOST
150	141.3125	Fitting weight calculation parameter	MISCWT
151	78.20	Fitting weight calculation parameter	MISCWT
152	0.000025	Fitting weight calculation parameter	MISCWT
153	0.00038	Engine drag beam weight parameter, lb/lb	MISCWT
154	20.0	Rule-of-thumb estimate for crew ejection frame, lb/man	MISCWT
155	0.2	Weight of partitions as a fraction of cover and minor frames, lb/lb	PARTIT
156	0.1	Weight of joints, splices, and fasteners as a fraction of cover and longeron weight, lb/lb	FWEIGH
157	0.77	Unit weight of ramp support frame, lb/in.	MISCWT

TABLE 13. EQUA ARRAY CONSTANTS AND EQUATION PARAMETERS (CONCL)

Loc	Value	Description	Subroutine Reference
158		Not used	
159		Not used	
160		Not used	

NOTE: EQUA array starts at common location 81

TABLE 14. FFLD ARRAY VARIABLES

Loc	Variable Name	Engrg Symbol	Description	Subroutine Reference
1			Major frame station, in.	FFRME, FRMND1
2			Synthesis segment in which frame exists	FFRME, FRMND1
3	LPT		Number of load points	FFRME, FRMLD
4	NOC		Number of load sets (conditions)	FFRME, FRMLD
5	TMP		Shell temperature for load set 1,°F	FFRME
6		α_1	Angle to first load point for load set 1, deg	FFRME, FRMLD
7		EV_1	Vertical load at first load point for load set 1, lb	FFRME, FRMLD
8		EH_1	Lateral load at first load point for load set 1, lb	FFRME, FRMLD
9		EM_1	Moment at first load point for load set 1, in.-lb	FFRME, FRMLD
10		α_2	Angle to second load point for load set 1, deg	FFRME, FRMLD
11		EV_2	Vertical load at second load point for load set 1, lb	FFRME, FRMLD
12		EH_2	Lateral load at second load point for load set 1, lb	FFRME, FRMLD
13		EM_2	Moment at second load point for load set 1, in.-lb	FFRME, FRMLD
14		α_3	Angle to third load point for load set 1, deg	FFRME, FRMLD

TABLE 14. FFLD ARRAY VARIABLES (CONT)

Loc	Variable Name	Engrg Symbol	Description	Subroutine Reference
15		EV_3	Vertical load at third load point for load set 1, lb	FFRME, FRMLD
16		EH_3	Lateral load at third load point for load set 1, lb	FFRME, FRMLD
17		EM_3	Moment at third load point for load set 1, in.-lb	FFRME, FRMLD
18		α_4	Angle to fourth load point for load set 1, deg	FFRME, FRMLD
19		EV_4	Vertical load at fourth load point for load set 1, lb	FFRME, FRMLD
20		EH_4	Lateral load at fourth load point for load set 1, lb	FFRME, FRMLD
21		EM_4	Moment at fourth load point for load set 1, in.-lb	FFRME, FRMLD
22		α_5	Angle to fifth load point for load set 1, deg	FFRME, FRMLD
23		EV_5	Vertical load at fifth load point for load set 1, lb	FFRME, FRMLD
24		EH_5	Lateral load at fifth load point for load set 1, lb	FFRME, FRMLD
25		EM_5	Moment at fifth load point for load set 1, in.-lb	FFRME, FRMLD
26		α_6	Angle to sixth load point for load set 1, deg	FFRME, FRMLD
27		EV_6	Vertical load at sixth load point for load set 1, lb	FFRME, FRMLD

TABLE 14. FFLD ARRAY VARIABLES (CONT)

Loc	Variable Name	Engrg Symbol	Description	Subroutine Reference
28		EH_6	Lateral load at sixth load point for load set 1, lb	FFRME, FRMLD
29		EM_6	Moment at sixth load point for load set 1, in.-lb	FFRME, FRMLD
30 • • 54	TMP		Shell temperature for load set 2, °F, angles and loads at load points in same order as in locations 6 through 29	
55 • 79			Data for load set 3 in same order as in locations 5 through 29	
80 • 104			Data for load set 4	
105 • 129			Data for load set 5	
130 • 154			Data for load set 6	
155 • 179			Data for load set 7	
180 • 204			Data for load set 8	
205 • 229			Data for load set 9	

TABLE 14. FFLD ARRAY VARIABLES (CONT)

Loc	Variable Name	Engrg Symbol	Description	Subroutine Reference
230 • 254			Data for load set 10	
255 • 279			Data for load set 11	
280 • 304			Data for load set 12	
305 • 329			Data for load set 13	
330 • 354			Data for load set 14	
355 • 379			Data for load set 15	
380 • 404			Data for load set 16	
405 • 429			Data for load set 17	
430 • 454			Data for load set 18	
455 • 479			Data for load set 19	

TABLE 14. FFLD ARRAY VARIABLES (CONCL)

Loc	Variable Name	Engrg Symbol	Description	Subroutine Reference
480 • 504			Data for load set 20	
505 • 529			Data for load set 21	
530 • 554			Data for load set 22	
555 • 579			Data for load set 23	
580			Not used	

NOTE: FFLD array starts at common location 2621.

TABLE 15. FMP ARRAY VARIABLES

Loc	Engrg Symbol	Description	Subroutine Reference
1		Temperature of cover for maximum up-bending condition at cut, °F, and corresponding material data in locations 2 through 20	LDCHK
2	μ	Poisson's ratio	LDCHK, FBEND
3	A_C	Constant for compression stress-strain curve fit, in./in.	LDCHK
4	B_C	Constant for compression stress-strain curve fit, in.^{2}/lb	LDCHK
5	E_C	Compression modulus of elasticity, psi	LDCHK, FBEND
6	F_{CY}	Compression yield stress, psi	LDCHK
7	A_T	Constant for tension stress-strain curve fit, in./in.	LDCHK
8	B_T	Constant for tension stress-strain curve fit, in.^{2}/lb	LDCHK
9	E_T	Tension modulus of elasticity, psi	LDCHK
10	F_{TY}	Tension yield stress, psi	LDCHK
11	ρ	Material density, lb/in.^{3}	LDCHK
12	F_{TU}	Ultimate tensile strength, psi	LDCHK, FBEND
13	F_{CPL}	Compressive stress at proportional limit, psi	LDCHK
14	E_{RT}	Modulus of elasticity at room temperature, psi	LDCHK, FBEND, SPRINT
15	G_{RT}	Shear modulus at room temperature, psi	LDCHK

TABLE 15. FMP ARRAY VARIABLES (CONT)

Loc	Engrg Symbol	Description	Subroutine Reference
16	F_{SU}	Ultimate shear strength, psi	LDCHK
17	F_{BRU}	Ultimate bearing strength, psi	LDCHK
18	K_{FTU}	Fraction of ultimate tensile strength at endurance limit for a polished specimen under cyclic load.	LDCHK
19	K_{FTU}	Fraction of ultimate tensile strength for shell bending	LDCHK, FBEND
20	K_{FTU}	Fraction of ultimate tensile strength under cyclic pressure load	LDCHK
21 . . 30		Not used Not used	
31		Temperature of cover for maximum down-bending condition at cut, °F, and corresponding material data in locations 32 through 50	LDCHK
32			LDCHK, FBEND
33	A_C		LDCHK
34	B_C		LDCHK
35	E_C		LDCHK, FBEND
36	F_{CY}		LDCHK
37	A_T		LDCHK
38	B_T		LDCHK

TABLE 15. FMP ARRAY VARIABLES (CONT)

Loc	Engrg Symbol	Description	Subroutine Reference
39	E_T		LDCHK
40	F_{TY}		LDCHK
41	ρ		LDCHK
42	F_{TU}		LDCHK, FBEND
43	F_{CPL}		LDCHK
44	E_{RT}		LDCHK
45	G_{RT}		LDCHK
46	F_{SU}		LDCHK
47	F_{BRU}		LDCHK
48	K_{FTU}		LDCHK
49	K_{FTU}		LDCHK, FBEND
50	K_{FTU}		LDCHK
51		Not used	
⋮			
60		Not used	
61		Temperature of cover for maximum shear condition at cut, °F, and corresponding material data in locations 62 through 80	LDCHK

TABLE 15. FMP ARRAY VARIABLES (CONT)

Loc	Engrg Symbol	Description	Subroutine Reference
62	μ		LDCHK, GJIGEO, FCOVER, MINFR
63	A_C		LDCHK
64	B_C		LDCHK
65	E_C		LDCHK, MINFR, FBEND
66	F_{CY}		LDCHK
67	A_T		LDCHK
68	B_T		LDCHK
69	E_T		LDCHK, GJIGEO, FCOVER, CVPRES
70	F_{TY}		LDCHK
71	ρ		LDCHK, FCOVER, FWEIGH
72	F_{TU}		LDCHK, FCOVER, CVPRES
73	F_{CPL}		LDCHK
74	E_{RT}		LDCHK
75	G_{RT}		LDCHK
76	F_{SU}		LDCHK, FCOVER

TABLE 15. FMP ARRAY VARIABLES (CONT)

Loc	Engrg Symbol	Description	Subroutine Reference
77	F_{BRU}		LDCHK
78	K_{FTU}		LDCHK, FCOVER
79	K_{FTU}		LDCHK
80	K_{FTU}		LDCHK, CVPRES
81		Not used	
⋮			
90		Not used	
91		Temperature of longeron for maximum up-bending condition at cut, °F, and corresponding material data in locations 92 through 110	LDCHK
92	μ		LDCHK
93	A_C		LDCHK
94	B_C		LDCHK
95	E_C		LDCHK, FBEND
96	F_{CY}		LDCHK, FBEND
97	A_T		LDCHK
98	B_T		LDCHK
99	E_T		LDCHK

TABLE 15. FMP ARRAY VARIABLES (CONT)

Loc	Engrg Symbol	Description	Subroutine Reference
100	F_{TY}		LDCHK
101	ρ		LDCHK, FBEND, FWEIGH
102	F_{TU}		LDCHK
103	F_{CPL}		LDCHK
104	E_{RT}		LDCHK, FBEND, SPRINT
105	G_{RT}		LDCHK
106	F_{SU}		LDCHK
107	F_{BRU}		LDCHK
108	K_{FTU}		LDCHK
109	K_{FTU}		LDCHK
110	K_{FTU}		LDCHK
111		Not used	
⋮			
120		Not used	
121		Temperature of longeron for maximum down-bending condition at cut, °F, and corresponding material data in locations 122 through 140	LDCHK
122	μ		LDCHK

TABLE 15. RMP ARRAY VARIABLES (CONT)

Loc	Engrg Symbol	Description	Subroutine Reference
123	A_C		LDCHK
124	B_C		LDCHK
125	E_C		LDCHK, FBEND
126	F_{CY}		LDCHK, MINFR, FBEND
127	A_T		LDCHK
128	B_T		LDCHK
129	E_T		LDCHK
130	F_{TY}		LDCHK
131	ρ		LDCHK
132	F_{TU}		LDCHK
133	F_{CPL}		LDCHK
134	E_{RT}		LDCHK
135	G_{RT}		LDCHK
136	F_{SU}		LDCHK
137	F_{BRU}		LDCHK
138	K_{FTU}		LDCHK

TABLE 15. RMP ARRAY VARIABLES (CONT)

Loc	Engrg Symbol	Description	Subroutine Reference
139	K_{FTU}		LDCHK
140	K_{FTU}		LDCHK
141		Not used	
⋮			
150		Not used	
151		Temperature of longeron for maximum shear condition at cut, °F, and corresponding material data in locations 152 through 170	LDCHK
152	μ		LDCHK
153	A_C		LDCHK
154	B_C		LDCHK
155	E_C		LDCHK, MINFR, FBEND
156	F_{CY}		LDCHK, FBEND
157	A_T		LDCHK
158	B_T		LDCHK
159	E_T		LDCHK
160	F_{TY}		LDCHK
161	ρ		LDCHK

TABLE 15. RMP ARRAY VARIABLES (CONT)

Loc	Engrg Symbol	Description	Subroutine Reference
162	F_{TU}		LDCHK
163	F_{CPL}		LDCHK
164	E_{RT}		LDCHK
165	G_{RT}		LDCHK
166	F_{SU}		LDCHK
167	F_{BRU}		LDCHK
168	K_{FTU}		LDCHK
169	K_{FTU}		LDCHK
170	K_{FTU}		LDCHK
171		Not used	
⋮			
180		Not used	
181		Temperature of minor frame for maximum up-bending condition at cut, °F, and corresponding material data in locations 182 through 200	LDCHK
182	μ		LDCHK
183	A_C		LDCHK
184	B_C		LDCHK

TABLE 15. FMP ARRAY VARIABLES (CONT)

Loc	Engrg Symbol	Description	Subroutine Reference
185	E_C		LDCHK
186	F_{CY}		LDCHK
187	A_T		LDCHK
188	B_T		LDCHK
189	E_T		LDCHK
190	F_{TY}		LDCHK
191	ρ		LDCHK
192	F_{TU}		LDCHK
193	F_{CPL}		LDCHK
194	E_{RT}		LDCHK
195	G_{RT}		LDCHK
196	F_{SU}		LDCHK
197	F_{BRU}		LDCHK
198	K_{FTU}		LDCHK
199	K_{FTU}		LDCHK
200	K_{FTU}		LDCHK

TABLE 15. FMP ARRAY VARIABLES (CONT)

Loc	Engrg Symbol	Description	Subroutine Reference
201		Not used	
⋮			
210		Not used	
211		Temperature of minor frame for maximum down-bending condition at cut, °F, and corresponding material data in locations 212 through 230	LDCHK
212	μ		LDCHK
213	A_C		LDCHK
214	B_C		LDCHK
215	E_C		LDCHK, MINFR
216	F_{CY}		LDCHK
217	A_T		LDCHK
218	B_T		LDCHK
219	E_T		LDCHK
220	F_{TY}		LDCHK
221	ρ		LDCHK
222	F_{TU}		LDCHK
223	F_{CPL}		LDCHK

TABLE 15. FMP ARRAY VARIABLES (CONT)

Loc	Engrg Symbol	Description	Subroutine Reference
224	E_{RT}		LDCHK
225	G_{RT}		LDCHK
226	F_{SU}		LDCHK
227	F_{BRU}		LDCHK
228	K_{FTU}		LDCHK
229	K_{FTU}		LDCHK
230	K_{FTU}		LDCHK
231		Not used	
⋮			
240		Not used	
241		Temperature of minor frame for maximum shear condition at cut, °F, and corresponding material data in locations 242 through 260	LDCHK
242	μ		LDCHK
243	A_C		LDCHK
244	B_C		LDCHK
245	E_C		LDCHK, MINFR, BLKHDS, SECOST

TABLE 15. FMP ARRAY VARIABLES (CONT)

Loc	Engrg Symbol	Description	Subroutine Reference
246	F_{CY}		LDCHK, MINFR, BLKHDS, SECOST
247	A_T		LDCHK
248	B_T		LDCHK
249	E_T		LDCHK
250	F_{TY}		LDCHK
251	ρ		LDCHK, MINFR, BLKHDS, SECOST
252	F_{TU}		LDCHK, MINFR, BLKHDS, SECOST
253	F_{CPL}		LDCHK
254	E_{RT}		LDCHK
255	G_{RT}		LDCHK
256	F_{SU}		LDCHK
257	F_{BRU}		LDCHK
258	K_{FTU}		LDCHK, MINFR
259	K_{FTU}		LDCHK
260	K_{FTU}		LDCHK, BLKHDS, SECOST

TABLE 15. FMP ARRAY VARIABLES (CONCL)

Loc	Engrg Symbol	Description	Subroutine Reference
261		Not used	
⋮			
300		Not used	

TABLE 16. FMWT ARRAY VARIABLES

Loc	Description	Subroutine Reference[a]
1	Fuselage station of major frame 1, in.	FFRME, MISCWT, SUMMRY, SPRINT
2	Fuselage station of major frame 2, in.	FFRME, MISCWT, SUMMRY, SPRINT
3	Fuselage station of major frame 3, in.	FFRME, MISCWT, SUMMRY, SPRINT
4	Fuselage station of major frame 4, in.	FFRME, MISCWT, SUMMRY, SPRINT
5	Fuselage station of major frame 5, in.	FFRME, MISCWT, SUMMRY, SPRINT
6	Fuselage station of major frame 6, in.	FFRME, MISCWT, SUMMRY, SPRINT
7	Fuselage station of major frame 7, in.	FFRME, MISCWT, SUMMRY, SPRINT
8	Fuselage station of major frame 8, in.	FFRME, MISCWT, SUMMRY, SPRINT
9	Fuselage station of major frame 9, in.	FFRME, MISCWT, SUMMRY, SPRINT
10	Fuselage station of major frame 10, in.	FFRME, MISCWT, SUMMRY, SPRINT
11	Fuselage station of major frame 11, in.	FFRME, MISCWT, SUMMRY, SPRINT
12	Fuselage station of major frame 12, in.	FFRME, MISCWT, SUMMRY, SPRINT
13	Fuselage station of major frame 13, in.	FFRME, MISCWT, SUMMRY, SPRINT
14	Fuselage station of major frame 14, in.	FFRME, MISCWT, SUMMRY, SPRINT
15	Fuselage station of major frame 15, in.	FFRME, MISCWT, SUMMRY, SPRINT
16	Synthesis segment of major frame 1	FFRME
17	Synthesis segment of major frame 2	FFRME
18	Synthesis segment of major frame 3	FFRME
19	Synthesis segment of major frame 4	FFRME
20	Synthesis segment of major frame 5	FFRME

TABLE 16. FMWT ARRAY VARIABLES (CONT)

Loc	Description	Subroutine Reference[a]
21	Synthesis segment of major frame 6	FFRME
22	Synthesis segment of major frame 7	FFRME
23	Synthesis segment of major frame 8	FFRME
24	Synthesis segment of major frame 9	FFRME
25	Synthesis segment of major frame 10	FFRME
26	Synthesis segment of major frame 11	FFRME
27	Synthesis segment of major frame 12	FFRME
28	Synthesis segment of major frame 13	FFRME
29	Synthesis segment of major frame 14	FFRME
30	Synthesis segment of major frame 15	FFRME
31	Cap Weight of frame 1, lb	FFRME
32	Cap weight of frame 2, lb	FFRME
33	Cap weight of frame 3, lb	FFRME
34	Cap weight of frame 4, lb	FFRME
35	Cap weight of frame 5, lb	FFRME
36	Cap weight of frame 6, lb	FFRME
37	Cap weight of frame 7, lb	FFRME
38	Cap weight of frame 8, lb	FFRME
39	Cap weight of frame 9, lb	FFRME
40	Cap weight of frame 10, lb	FFRME

TABLE 16. FMWT ARRAY VARIABLES (CONT)

Loc	Description	Subroutine Reference[a]
41	Cap weight of frame 11, lb	FFRME
42	Cap weight of frame 12, lb	FFRME
43	Cap weight of frame 13, lb	FFRME
44	Cap weight of frame 14, lb	FFRME
45	Cap weight of frame 15, lb	FFRME
46	Web weight of frame 1, lb	FFRME
47	Web weight of frame 2, lb	FFRME
48	Web weight of frame 3, lb	FFRME
49	Web weight of frame 4, lb	FFRME
50	Web weight of frame 5, lb	FFRME
51	Web weight of frame 6, lb	FFRME
52	Web weight of frame 7, lb	FFRME
53	Web weight of frame 8, lb	FFRME
54	Web weight of frame 9, lb	FFRME
55	Web weight of frame 10, lb	FFRME
56	Web weight of frame 11, lb	FFRME
57	Web weight of frame 12, lb	FFRME
58	Web weight of frame 13, lb	FFRME
59	Web weight of frame 14, lb	FFRME
60	Web weight of frame 15, lb	FFRME

TABLE 16. FMWT ARRAY VARIABLES (CONT)

Loc	Description	Subroutine Reference[a]
61	Stiffener weight of frame 1, lb	FFRME
62	Stiffener weight of frame 2, lb	FFRME
63	Stiffener weight of frame 3, lb	FFRME
64	Stiffener weight of frame 4, lb	FFRME
65	Stiffener weight of frame 5, lb	FFRME
66	Stiffener weight of frame 6, lb	FFRME
67	Stiffener weight of frame 7, lb	FFRME
68	Stiffener weight of frame 8, lb	FFRME
69	Stiffener weight of frame 9, lb	FFRME
70	Stiffener weight of frame 10, lb	FFRME
71	Stiffener weight of frame 11, lb	FFRME
72	Stiffener weight of frame 12, lb	FFRME
73	Stiffener weight of frame 13, lb	FFRME
74	Stiffener weight of frame 14, lb	FFRME
75	Stiffener weight of frame 15, lb	FFRME
76	Total weight of major frame 1, lb	FFRME, MISCWT, SUMMRY, SPRINT
77	Total weight of major frame 2, lb	FFRME, MISCWT, SUMMRY, SPRINT
78	Total weight of major frame 3, lb	FFRME, MISCWT, SUMMRY, SPRINT
79	Total weight of major frame 4, lb	FFRME, MISCWT, SUMMRY, SPRINT
80	Total weight of major frame 5, lb	FFRME, MISCWT, SUMMRY, SPRINT

TABLE 16. FMWT ARRAY VARIABLES (CONCL)

Loc	Description	Subroutine Reference[a]
81	Total weight of major frame 6, lb	FFRME, MISCWT, SUMMRY, SPRINT
82	Total weight of major frame 7, lb	FFRME, MISCWT, SUMMRY, SPRINT
83	Total weight of major frame 8, lb	FFRME, MISCWT, SUMMRY, SPRINT
84	Total weight of major frame 9, lb	FFRME, MISCWT, SUMMRY, SPRINT
85	Total weight of major frame 10, lb	FFRME, MISCWT, SUMMRY, SPRINT
86	Total weight of major frame 11, lb	FFRME, MISCWT, SUMMRY, SPRINT
87	Total weight of major frame 12, lb	FFRME, MISCWT, SUMMRY, SPRINT
88	Total weight of major frame 13, lb	FFRME, MISCWT, SUMMRY, SPRINT
89	Total weight of major frame 14, lb	FFRME, MISCWT, SUMMRY, SPRINT
90	Total weight of major frame 15, lb	FFRME, MISCWT, SUMMRY, SPRINT
91	Total number of major frames in this array	FFRME, MISCWT, SUMMRY, SPRINT

NOTE: FMWT array starts at common location 1910.

[a]Subroutine MISCWT adds crew ejection and ramp frames to the list calculated in subroutine FFRME.

TABLE 17. SCDT ARRAY VARIABLES

Loc	Description	Subroutine Reference[a]
1	Length of pilot's canopy, in.	
2	Length of navigator's canopy, in.	
3	Length of windshield per pane, in.	
4	Width of windshield per pane, in.	
5	Number of windshield panes	
6	Angle of incidence, bird impact, deg	
7	Length of cockpit window per pane, in.	
8	Width of cockpit window per pane, in.	
9	Number of cockpit window panes	
10	Not used	
11	Length of cabin window per pane, in.	
12	Width of cabin window per pane, in.	
13	Number of cabin window panes	
14	Not used	
15	Crew floor area, ft^2	
16	Nose radome surface area, ft^2	
17	Tail radome surface area, ft^2	
18	Miscellaneous radomes surface area, ft^2	
19	Length of speed brake panel, in.	

TABLE 17. SCDT ARRAY VARIABLES (CONT)

Loc	Description	Subroutine Reference[a]
20	Width of speed brake panel, in.	
21	Area of speed brakes, ft^2	
22	Not used	
23	Main landing gear door area, ft^2	
24	Nose landing gear door area, ft^2	
25	Aft cargo door area, ft^2	
26	Side cargo door area, ft^2	
27	Forward loading ramp area, ft^2	MISCWT
28	Length of forward ramp, in.	MISCWT
29	Forward ramp toe/extension area, ft^2	
30	Aft loading ramp area, ft^2	MISCWT
31	Length of aft ramp, in.	MISCWT
32	Aft ramp toe/extension area, ft^2	
33	Internal pressure door area, ft^2	
34	Length of pressure door, in.	
35	Width of pressure door, in.	
36	Type of weapons bay door 0, 1 = sliding door 2 = single hinged 3 = double hinged	
37	Weapons bay door area, ft^2	

TABLE 17. SCDT ARRAY VARIABLES (CONT)

Loc	Description	Subroutine Reference[a]
38	Number of guns	
39	Number of rounds of ammunition	
40	Flight emergency exit area per door, ft^2	
41	Number of flight emergency exit doors	
42	Ground emergency exit area per door, ft^2	
43	Number of ground emergency exit doors	
44	Paratroop door area per door, ft^2	
45	Number of paratroop doors	
46	Entrance door area per door, ft^2	
47	Number of entrance doors	
48	Type of in-flight refueling provisions o, 1 = probe 2 = boom 3 = both	
49	Ram-air turbine door area, ft^2	
50	Engine removal door area, ft^2	
51	Accessory access door area, ft^2	
52	Thermal protection panel area, ft^2	
53	Main landing gear pod surface area, ft^2	
54	Miscellaneous fairing area, ft^2	
55	Dorsal fin wetted area, ft^2	

TABLE 17. SCDT ARRAY VARIABLES (CONCL)

Loc	Description	Subroutine Reference[a]
56	Length of cargo bay, in.	
57	Number of walkways in cargo bay	
58	Cargo bay floor area, ft^2	
59	Not used	
•		
80	Not used	

NOTE: SCDT array starts at common location 921.

[a]This array is primarily used in subroutine SECOST and printed in subroutine SPRINT. Routines are referenced when specific variables are used by any other routines.

TABLE 18. SCST ARRAY VARIABLES

Loc	Description	Subroutine Reference[a]
1	Indicator or weight of pilots canopy	
2	Indicator or weight of navigator strike officer canopy	
3	Indicator or weight of windshield	
4	Indicator or weight of cockpit windows and ports	
5	Indicator or weight of cabin windows and ports	
6	Indicator or weight of cockpit flooring and supports	
7	Indicator or weight of stairway and ladder	
8	Indicator or weight of nose radome (RDNS)	FWEIGH
9	Indicator or weight of aft radome (RDTC)	FWEIGH
10	Indicator or weight of miscellaneous radomes	
11	Indicator or weight of speed brakes	
12	Weight of other secondary structure component, lb	
13	Indicator or weight of main landing gear door	
14	Indicator or weight of nose landing gear door	
15	Indicator or weight of aft cargo doors	
16	Indicator or weight of side cargo doors	
17	Indicator or weight of forward loading ramp	MISCWT
18	Indicator or weight of forward ramp toe/ extension	

TABLE 18. SCST ARRAY VARIABLES (CONT)

Loc	Description	Subroutine Reference[a]
19	Indicator or weight of aft loading ramp	MISCWT
20	Indicator or weight of aft ramp toe/extension	
21	Indicator or weight of internal pressure door	
22	Indicator or weight of weapons bay doors	
23	Indicator or weight of gun access doors	
24	Indicator or weight of ammunition access doors	
25	Indicator or weight of flight emergency exit doors	
26	Indicator or weight of ground emergency exit doors	
27	Indicator or weight of paratroop doors	
28	Indicator or weight of spoiler deflectors-paratroop	
29	Indicator or weight of entrance doors	
30	Indicator or weight of miscellaneous access doors	
31	Indicator or weight of in-flight refueling doors	
32	Indicator or weight of ram-air turbine doors	
33	Indicator or weight of engine removal doors	
34	Indicator or weight of accessory access doors	
35	Indicator or weight of thermal protection panels	
36	Indicator or weight of main landing gear pod	
37	Indicator or weight of miscellaneous fairings	

TABLE 18. SCST ARRAY VARIABLES (CONT)

Loc	Description	Subroutine Reference[a]
38	Indicator or weight of dorsal fin panels	
39	Indicator or weight of walkways, steps, and grips	
40	Indicator or weight of antiskid protection	
41	Indicator or weight of exterior finish	
42	Indicator or weight of interior finish	
43	Indicator or weight of cabin flooring and supports	
44	Not used	
•		
50	Not used	
51	X-CG of pilot's canopy, in.	
52	X-CG of navigator strike officer canopy, in.	
53	X-CG of windshield, in.	
54	X-CG of cockpit windows and ports, in.	
55	X-CG of cabin windows and ports, in.	
56	X-CG of cockpit flooring and supports, in.	
57	X-CG of stairway and ladder, in.	
58	X-CG of nose radome, in.	
59	X-CG of aft radome, in.	
60	X-CG of miscellaneous radomes, in.	
61	X-CG of speed brakes, in.	
62	X-CG of other secondary structure component, in.	

TABLE 18. SCST ARRAY VARIABLES (CONT)

Loc	Description	Subroutine Reference[a]
63	X-CG of main landing gear door, in.	
64	X-CG of nose landing gear door, in.	
65	X-CG of aft cargo doors, in.	
66	X-CG of side cargo doors, in.	
67	X-CG of forward loading ramp, in.	MISCWT
68	X-CG of forward ramp toe/extension, in.	
69	X-CG of aft loading ramp, in.	MISCWT
70	X-CG of aft ramp toe/extension, in.	
71	X-CG of internal pressure door, in.	
72	X-CG of weapons bay doors, in.	
73	X-CG of gun access doors, in.	
74	X-CG of ammunition access doors, in.	
75	X-CG of flight emergency exit doors, in.	
76	X-CG of ground emergency exit doors, in.	
77	X-CG of paratroop doors, in.	
78	X-CG of spoilers deflectors-paratroop, in.	
79	X-CG of entrance doors, in.	
80	X-CG of miscellaneous access doors, in.	
81	X-CG of in flight refueling doors, in.	

TABLE 18. SCST ARRAY VARIABLES (CONCL)

Loc	Description	Subroutine Reference[a]
82	X-CG of ram-air turbine doors, in.	
83	X-CG of engine removal doors, in.	
84	X-CG of accessory access doors, in.	
85	X-CG of thermal protection panels, in.	
86	X-CG of main landing gear pod, in.	
87	X-CG of miscellaneous fairings, in.	
88	X-CG of dorsal fin panels, in.	
89	X-CG of walkways, steps, and grips, in.	
90	X-CG of antiskid protection, in.	
91	S-CG of exterior finish, in.	
92	X-CG of interior finish, in.	
93	X-CG of cabin flooring and supports, in.	
94	Not used	
•		
100	Not used	

NOTE: SCST array starts at common location 821.

[a]This array is primarily used in subroutines SECOST, SUMMARY, and SPRINT. Routines are referenced when specific variables are used by any other routines.

TABLE 19. SCWT ARRAY VARIABLES

Loc	Description
1	Pilot's canopy and mechanisms weight, lb
2	Navigator strike officer canopy and mechanisms weight, lb
3	Windshield and framing weight, lb
4	Cockpit windows and ports weight, lb
5	Cabin windows and ports weight, lb
6	Cockpit flooring and support weight (secondary structure), lb
7	Stairway and ladder weight, lb
8	Nose radome and mechanisms weight, lb
9	Aft radome and mechanisms weight, lb
10	Miscellaneous radome weight, lb
11	Speed brakes structure and supports weight, lb
12	Weight of other secondary structure component, lb
13	Main landing gear door weight, lb
14	Nose landing gear door weight, lb
15	Aft cargo doors and mechanisms weight, lb
16	Side cargo doors and mechanisms weight, lb
17	Forward loading ramp and mechanisms weight, lb
18	Forward ramp toe/extension weight, lb
19	Aft loading ramp and mechanisms weight, lb
20	Aft ramp toe/extension weight, lb
21	Internal pressure door weight, lb

TABLE 19. SCWT ARRAY VARIABLES (CONT)

Loc	Description
22	Weapons bay doors and mechanisms weight, lb
23	Gun access doors weight, lb
24	Ammunition access doors weight, lb
25	Flight emergency exit doors weight, lb
26	Ground emergency exit doors weight, lb
27	Paratroop doors weight, lb
28	Spoilers deflectors weight - paratroop doors, lb
29	Entrance doors weight, lb
30	Miscellaneous access doors weight, lb
31	In-flight refueling doors weight, lb
32	Ram-air turbine doors weight, lb
33	Engine removal doors weight, lb
34	Accessory access doors weight, lb
35	Thermal protection panels weight, lb
36	Main landing gear pod weight, lb
37	Miscellaneous fairings weight, lb
38	Dorsal fin panels weight, lb
39	Walkways, steps, and grips weight, lb
40	Antiskid protection weight, lb
41	Exterior finish weight, lb

TABLE 19. SCWT ARRAY VARIABLES (CONCL)

Loc	Description
42	Interior finish weight, lb
43	Cabin flooring and supports weight (basic structure), lb
44	Not used
•	
50	Not used

NOTE: SCWT array starts at common location 3951. This array is calculated in subroutine SECOST, used for summary calculations in subroutine SUMMRY, and printed in subroutine SPRINT.

TABLE 20. SUMM ARRAY VARIABLES

Loc	Description	Subroutine Reference
1	Total minor frame weight, lb	SUMMRY, SPRINT
2	X-CG minor frames, in.	SUMMRY, SPRINT
3	Total joints, splices, and fasteners weight, lb	SUMMRY, SPRINT
4	X-CG joints, splices, and fasteners, in.	SUMMRY, SPRINT
5	Total upper sector cover weight, lb	SUMMRY, SPRINT
6	X-CG upper sector cover, in.	SUMMRY, SPRINT
7	Total side sector cover weight, lb	SUMMRY, SPRINT
8	X-CG side sector cover, in.	SUMMRY, SPRINT
9	Total lower sector cover weight, lb	SUMMRY, SPRINT
10	X-CG lower sector cover, in.	SUMMRY, SPRINT
11	Total secondary longitudinal member weight, lb	SUMMRY, SPRINT
12	X-CG secondary longitudinal members, in.	SUMMRY
13	Total upper longerons or stringers weight, lb	SUMMRY, SPRINT
14	X-CG upper longerons or stringers, in.	SUMMRY
15	Total side stringers weight, lb	SUMMRY, SPRINT
16	X-CG side stringers, in.	SUMMRY
17	Total lower longerons or stringers weight, lb	SUMMRY, SPRINT
18	X-CG lower longerons or stringers, in.	SUMMRY
19	Total partitions weight, lb	SUMMRY, SPRINT
20	X-CG partitions, in.	SUMMRY, SPRINT

TABLE 20. SUMM ARRAY VARIABLES (CONT)

Loc	Description	Subroutine Reference
21	Total major frames and bulkheads weight, lb	SUMMRY, SPRINT
22	X-CG major frames and bulkheads, in.	SUMMRY, SPRINT
23	Engine drag beam weight, lb	MISCWT, SUMMRY, SPRINT
24	X-CG engine drag beam, in.	MISCWT, SUMMRY, SPRINT
25	Total wing and empennage fittings weight, lb	MISCWT, SUMMRY, SPRINT
26	X-CG wing and empennage fittings, in.	MISCWT, SUMMRY, SPRINT
27	Cabin flooring and support weight, lb	SUMMRY, SPRINT
28	X-CG cabin flooring and supports, in.	SUMMRY, SPRINT
29	Total upper cutout longerons weight, lb	SUMMRY, SPRINT
30	X-CG upper cutout longerons, in.	SUMMRY
31	Total lower cutout longerons weight, lb	SUMMRY, SPRINT
32	X-CG lower cutout longerons, in.	SUMMRY
33	Not used	
•		
40	Not used	
41	Total upper stringers weight, lb	SUMMRY, SPRINT
42	X-CG upper stringers, in.	SUMMRY, SPRINT
43	Total side stringers and secondary longitudinal members weight, lb	SUMMRY, SPRINT
44	X-CG side stringers and secondary longitudinal members, in.	SUMMRY, SPRINT

TABLE 20. SUMM ARRAY VARIABLES (CONCL)

Loc	Description	Subroutine Reference
45	Total lower stringers weight, lb	SUMMRY, SPRINT
46	X-CG lower stringers, in.	SUMMRY, SPRINT
47	Total upper longerons and cutout longerons weight, lb	SUMMRY, SPRINT
48	X-CG upper longerons and cutout longerons, in.	SUMMRY, SPRINT
49	Total lower longerons and cutout longerons weight, lb	SUMMRY, SPRINT
50	X-CG lower longerons and cutout longerons, in.	SUMMRY, SPRINT
51 • 60	Not used Not used	
61	Total basic structure weight, lb	SUMMRY, SPRINT, FUSO2
62	X-CG basic structure, in.	SUMMRY, SPRINT
63	Total secondary structure weight (AN-9102-D, page 9), lb	SUMMRY, SPRINT, FUSO2
64	X-CG secondary structure, in.	SUMMRY, SPRINT
65	Total doors panels and miscellaneous weight (AN-9102-D, page 10), lb	SUMMRY, SPRINT, FUSO2
66	X-CG doors panels and miscellaneous, in.	SUMMRY, SPRINT
67	Total fuselage weight, lb	SUMMRY, SPRINT, FUSO2
68	X-CG fuselage structure, in.	SUMMRY, SPRINT, FUSO2
69 • 100	Not used Not used	

NOTE: SUMM array starts at common location 4001. Subroutine FUSSHL clears SUMM array prior to any weight calculations.

TABLE 21. S21 ARRAY VARIABLES

Loc	Variable Name	Description	Subroutine Reference
1		X-coordinate of wing leading edge apex, in.	FARLD, SPRINT
2	XWFS	X-coordinate of wing front spar support frame, in.	FRMEG, FLDDT, MISCWT, SPRINT
3	XWRS	X-coordinate of wing rear spar support frame, in.	FRMEG, FLDDT, MISCWT, SPRINT
4	XWIS	X-coordinate of wing intermediate spar support frame, in.	FRMEG, FLDDT, MISCWT, SPRINT
5	YWSF	Y-coordinate of wing-fuselage interface, in.	FRMEG, FLDDT, SPRINT
6	ZWSF	Z-coordinate of wing-fuselage interface, in.	FRMEG, SPRINT
7	WCT	Wing attach-type indicator 0 = Shear tie 1 = Shear and moment tie	FLDDT, SPRINT
8	XHFS	X-coordinate of horizontal tail front spar support frame, in.	FRMEG, FLDDT, MISCWT, SPRINT
9	XHRS	X-coordinate of horizontal tail rear spar support frame, in.	FRMEG, FLDDT, MISCWT, SPRINT
10	YHSF	Y-coordinate of horizontal tail-fuselage interface, in.	FRMEG, FLDDT, SPRINT
11	ZHSF	Z-coordinate of horizontal tail-fuselage interface, in.	FRMEG, SPRINT
12	HCT	Horizontal tail attach-type indicator 0 = Shear tie 1 = Shear and moment tie 2 = Spindle-mounted	FLDDT, SPRINT
13	XVFS	X-coordinate of vertical tail front spar support frame, in.	FRMEG, FLDDT, MISCWT, SPRINT
14	XVRS	X-coordinate of vertical tail rear spar support frame, in.	FRMEG, FLDDT, MISCWT, SPRINT
15	YVSF	Y-coordinate of vertical tail-fuselage interface, in.	FRMEG, FLDDT, SPRINT
16	ZVSF	Z-coordinate of vertical tail-fuselage interface, in.	FRMEG, FLDDT, SPRINT
17	VCT	Vertical tail attach-type indicator 0 = Shear tie 1 = Shear and moment tie 2 = Spindle-mounted	FLDDT, SPRINT

TABLE 21. S21 ARRAY VARIABLES (CONT)

Loc	Variable Name	Description	Subroutine Reference
18	XNFS	X-coordinate of nacelle forward support frame, in.	FRMEG, FLDDT, MISCWT, SPRINT
19	XNRS	X-coordinate of nacelle rear support frame, in.	FRMEG, FLDDT, MISCWT, SPRINT
20	YNSF	Y-coordinate of nacelle pylon-fuselage interface, in.	FRMEG, FLDDT, SPRINT
21	ZNSF	Z-coordinate of nacelle pylon-fuselage interface, in.	FRMEG, SPRINT
22	XOFS	X-coordinate of other component (Store) forward support frame, in.	FRMEG, FLDDT, MISCWT, SPRINT
23	XORS	X-coordinate of other component (store) rear support frame, in.	FRMEG, FLDDT, MISCWT, SPRING
24	YOSF	Y-coordinate of other component pylon-fuselage interface, in.	FRMEG, FLDDT, SPRINT
25	ZOSF	Z-coordinate of other component pylon-fuselage interface, in.	FRMEG, SPRINT
26	XNGG	X-coordinate of nose gear tires, in.	FLDDT, SPRINT
27	XNGT	X-coordinate of nose gear trunnion frame, in.	FRMEG, FLDDT, SPRINT
28	XNGD	X-coordinate of nose gear drag strut frame, in.	FRMEG, FLDDT, SPRINT
29		Not used	
30	YNGS	Y-coordinate of nose gear strut-fuselage interface, in.	FRMEG, SPRINT
31	ZNGS	Z-coordinate of nose gear strut-fuselage interface, in.	FRMEG, SPRINT
32	XMGG	X-coordinate of main gear tires, in.	FLDDT, SPRINT
33	XMGT	X-coordinate of main gear trunnion frame, in.	FRMEG, FLDDT, SPRINT
34	XMGD	X-coordinate of main gear drag strut frame, in.	FRMEG, FLDDT, SPRINT
35	YMGG	Y-coordinate of main gear tires, in.	FLDDT, SPRINT
36	YMGS	Y-coordinate of main gear strut-fuselage interface, in.	FRMEG, FLDDT, SPRINT
37	ZMGS	Z-coordinate of main gear strut-fuselage interface, in.	FRMEG, SPRINT

TABLE 21. S21 ARRAY VARIABLES (CONCL)

Loc	Variable Name	Description	Subroutine Reference
38		Z-coordinate of ground at main gear, in.	SPRINT
39		Not used	
40		Not used	
41		Number of crewmembers	MISCWT, SECOST, SPRINT
42		X-CG of crew, in.	MISCWT
43		Number of engines	MISCWT, SECOST, SPRINT
44		Engine diameter, in.	SECOST, SPRINT
45		X-coordinate or engine front face, in.	MISCWT, SECOST, SPRINT
46		Engine length, in.	MISCWT, SECOST, SPRINT
47		Wing chord at side of fuselage, in.	SECOST, SPRINT
48		Horizontal tail chord at side of fuselage, in.	
49	CRV	Vertical tail chord at intersection of fuselage, in.	FRMEG, MISCWT
50	TOC	Wing thickness to chord ratio at side of fuselage	FRMEG, MISCWT
51		Thrust per engine, lb	MISCWT

NOTE S21 array starts at common location 1001.

TABLE 22. S22 ARRAY VARIABLES

Loc	Variable Name	Engrg Symbol	Description	Subroutine Reference
1			Type of input loads data 1 = Input (inactive) 2 = Compute from component data	FUSLD
2			Load condition-type indicator 1 = Balanced flight with flaps up 2 = Balanced flight with flaps down 3 = Two-wheeled landing 4 = Vertical gust 5 = Lateral gust 6 = Pitching acceleration 7 = Yawing acceleration 8 = Taxi	FUSLD
3			Not used	
4			Not used	
5	TMP		Structure temperature at design load condition, °F	FUSLD
6	FAC1		Limit load to ultimate load factor	FUSLD, FLDIN, FLDDT, FLDNT
7	FNZO	N_Z	Vehicle limit vertical load factor	FUSLD, FLDDT, DUMMY1, FLDNT
8		N_Y	Vehicle limit lateral load factor (inactive)	
9	XAPX		X-coordinate of wing leading edge apex, in.	FARLD
10	QDOT	$\dot{Q}$	Vehicle pitching acceleration, radians/sec^2	FUSLD, FLDDT, DUMMY1, FLDNT
11		$\dot{R}$	Vehicle yawing acceleration, (inactive), radians/sec^2	
12	SSPD		Vehicle sink speed at landing, ft/sec	FLDDT
13	STKE		Landing gear stroke, in.	FLDDT
14	FMN	M	Mach number at design condition, M	FUSLD
15	ALT		Altitude at design condition	FUSLD
16	PZN		Nose lift, lb	FLDDT, DUMMY1
17	XCPN		X-coordinate of nose lift, in.	FLDDT, DUMMY1, FARLD
18	PZBW		Body lift in presence of wing, lb	FLDDT, DUMMY1, FARLD

TABLE 22. S22 ARRAY VARIABLES (CONT)

Loc	Variable Name	Engrg Symbol	Description	Subroutine Reference
19	XCPB		X-coordinate of body lift in presence of wing, in.	FLDDT, DUMMY1 FARLD
20	PZWB		Wing outer panel lift, lb	FLDDT, DUMMY1
21	XCPW		X-coordinate wing outer panel lift, in.	FLDDT, DUMMY1
22	YCPW		Y-coordinate of wing outer panel CP, in.	FLDDT
23	PZH		Horizontal tail lift, lb	FLDDT, DUMMY1
24	XCPH		X-coordinate of horizontal tail lift, in.	FLDDT, DUMMY1
25	YCPH		Y-coordinate of horizontal tail CP, in.	FLDDT
26	PYV		Vertical tail lateral airload, lb	FLDDT
27	XCPV		X-coordinate of vertical tail lateral airload, in.	FLDDT
28	ZCPV		Z-coordinate of vertical tail CP, in.	FLDDT
29			Not used	
30			Not used	
31	BMIY(1)		Input longitudinal bending	FLDIN
.			moment at shell synthesis	
50	BMIY(20)		cuts (inactive), in.-lb	
51	BMIX(1)		Input cross-ship moment at	FLDIN
.	.		shell synthesis cuts	
70	BMIX(20)		(inactive), in.-lb	
71	VIZ(1)		Net input vertical shear at	FLDIN
.	.		shell synthesis cuts	
90	VIZ(20)		(inactive), in.-lb	
91			Not used	
.	.		To	
100			Not used	
101	DGW		Vehicle design weight, lb	FUSLD, FLDDT, DUMMY1
102	XCG		X-coordinate of vehicle CG, in.	FUSLD, FLDDT, DUMMY1, FLDNT
103			Not used	
104	ZCG		Z-coordinate of vehicle CG, in.	FLDDT, DUMMY1, FLDNT
105			Not used	

TABLE 22. S22 ARRAY VARIABLES (CONT)

Loc	Variable Name	Engrg Symbol	Description	Subroutine Reference
106	TIYY		Vehicle pitch inertia, lb-in.^{2}	FLDDT, DUMMY1
107			Vehicle yaw inertia (inactive), lb-in.^{2}	
108	WWT		Wing and content weight, lb	FLDDT, DUMMY1
109	XWCG		X-coordinate of wing and content CG, in.	FLDDT, DUMMY1
110	YWCG		Y-coordinate of wing and content CG, in.	FLDDT
111	ZWCG		Z-coordinate of wing and content CG, in.	FLDDT, DUMMY1
112			Not used	
113	WIOY		Pitch inertia of wing and contents about wing CG, lb-in.^{2}	FLDDT, DUMMY1
114			Yaw inertia of wing and contents about wing CG (inactive), lb-in.^{2}	
115	HWT		Horizontal tail and content weight, lb	FLDDT, DUMMY1
116	XHCG		X-coordinate of horizontal tail and content CG, in.	FLDDT, DUMMY1
117	YHCG		Y-coordinate of horizontal tail and content CG, in.	FLDDT
118	ZHCG		Z-coordinate of horizontal tail and contents CG, in.	FLDDT, DUMMY1
119			Not used	
120	HIOY		Pitch inertia of horizontal tail and content about tail CG, lb-in.^{2}	FLDDT, DUMMY1
121			Yaw inertia of horizontal tail and contents about tail CG (inactive), lb-in.^{2}	
122	VWT		Vertical tail and contents weight, lb	FLDDT, DUMMY1
123	XVCG		X-coordinate of vertical tail and content CG, in.	FLDDT, DUMMY1
124			Y-coordinate of vertical tail and content CG (inactive), in.	
125	ZVCG		Z-coordinate of vertical tail and content CG, in.	FLDDT, DUMMY1
126			Not used	

TABLE 22. S22 ARRAY VARIABLES (CONT)

Loc	Variable Name	Engrg Symbol	Description	Subroutine Reference
127	VIOY		Pitch inertia of vertical tail and contents about tail CG, lb-in.^{2}	FLDDT, DUMMY1
128			Yaw inertia of vertical tail and contents about tail CG (inactive), lb-in.^{2}	
129	AIWT		Nacelle and contents weight, lb	FLDDT, DUMMY1
130	XACG		X-coordinate of nacelle and contents CG, in.	FLDDT, DUMMY1
131	YACG		Y-coordinate of nacelle and contents CG, in.	FLDDT
132	ZACG		Z-coordinate of nacelle and contents CG, in.	FLDDT, DUMMY1
133			Not used	
134	AIOY		Pitch inertia of nacelle and contents about nacelle CG, lb-in.^{2}	FLDDT, DUMMY1
135			Yaw inertia of nacelle and contents about nacelle CG (inactive), lb-in.^{2}	
136	STWT		Other component or store weight, lb	FLDDT, DUMMY1
137	XST		X-coordinate of other component (store) CG, in.	FLDDT, DUMMY1
138	YST		Y-coordinate of other component (store) CG, in.	FLDDT
139	ZST		Z-coordinate of other component (store) CG, in.	FLDDT, DUMMY1
140			Not used	
141	SIOY		Pitch inertia of other component (store) about component CG, lb-in.^{2}	FLDDT, DUMMY1
142			Yaw inertia of other component (store) about component CG (inactive), lb-in.^{2}	
143			Not used	
.			To	
150			Not used	
151	WFC(1)		Weight of fuselage contents within segments, lb	FUSLD, DUMMY1, FLDNT
.	.			
170	WFC(20)			

TABLE 22. S22 ARRAY VARIABLES (CONCL)

Loc	Variable Name	Engrg Symbol	Description	Subroutine Reference
171	WFUS(1)		Weight of fuselage within segments, lb	FUSLD, DUMMY1, FLDNT
.	.			
190	WFUS(20)			
191			Not used	
.			To	
200			Not used	

NOTE S22 array starts at common location 1101. All variables in this array are transferred from mass storage file records by subroutines FUSLD.

TABLE 23. S6 ARRAY VARIABLES

Loc	Variable Name	Engrg Symbol	Description	Subroutine Reference[a]
1	XNGT		X-coordinate of nose gear trunnion frame, in.	FRMEG, FFRME
2	XNGD		X-coordinate of nose gear drag strut frame, in.	FRMEG, FFRME
3	XMGT		X-coordinate of main gear trunnion frame, in.	FRMEG, FFRME
4	XMGD		X-coordinate of main gear drag strut frame, in.	FRMEG, FFRME
5	XWFS		X-coordinate of wing front spar frame, in.	FRMEG, FFRME
6	XWIS		X-coordinate of wing intermediate spar frame, in.	FRMEG, FFRME
7	XWRS		X-coordinate of wing rear spar frame, in.	FRMEG, FFRME
8	XHFS		X-coordinate of horizontal tail front spar frame, in.	FRMEG, FFRME
9	XHRS		X-coordinate of horizontal tail rear spar frame, in.	FRMEG, FFRME
10	XVFS		X-coordinate of vertical tail front spar frame, in.	FRMEG, FFRME
11	XVRS		X-coordinate of vertical tail rear spar frame, in.	FRMEG, FFRME
12	XNFS		X-coordinate of nacelle forward support frame, in.	FRMEG, FFRME
13	XNRS		X-coordinate of nacelle rear support frame, in.	FRMEG, FFRME

TABLE 23. S6 ARRAY VARIABLES (CONT)

Loc	Variable Name	Engrg Symbol	Description	Subroutine Reference[a]
14	XOFS		X-coordinate of other component forward support frame, in.	FRMEG, FFRME
15	XORS		X-coordinate of other component rear support frame, in.	FRMEG, FFRME
16			Synthesis segment in which XNGT is located	FRMEG, FFRME
17			Synthesis segment in which XNGD is located	FRMEG, FFRME
18			Synthesis segment in which XMGT is located	FRMEG, FFRME
19			Synthesis segment in which XMGD is located	FRMEG, FFRME
20			Synthesis segment in which XWFS is located	FRMEG, FFRME
21			Synthesis segment in which XWIS is located	FRMEG, FFRME
22			Synthesis segment in which XWRS is located	FRMEG, FFRME
23			Synthesis segment in which XHFS is located	FRMEG, FFRME
24			Synthesis segment in which XHRS is located	FRMEG, FFRME
25			Synthesis segment in which XVFS is located	FRMEG, FFRME
26			Synthesis segment in which XVRS is located	FRMEG, FFRME

TABLE 23. S6 ARRAY VARIABLES (CONT)

Loc	Variable Name	Engrg Symbol	Description	Subroutine Reference[a]
27			Synthesis segment in which XNFS is located	FRMEG, FFRME
28			Synthesis segment in which XNRS is located	FRMEG, FFRME
29			Synthesis segment in which XOFS is located	FRMEG, FFRME
30			Synthesis segment in which XORS is located	FRMEG, FFRME
31			Angle to fuselage-component interface at XNGT, radians	FRMEG, FFRME
32			Angle to fuselage-component interface at XNGD, radians	FRMEG, FFRME
33			Angle to fuselage-component interface at XMGT, radians	FRMEG, FFRME
34			Angle to fuselage-component interface at XMGD, radians	FRMEG, FFRME
35			Angle to fuselage-component interface at XWIS, radians	FRMEG, FFRME
36			Angle to fuselage-component interface at XWIS, radians	FRMEG, FFRME
37			Angle to fuselage-component interface at XWRS, radians	FRMEG, FFRME
38			Angle to fuselage-component interface at XHFS, radians	FRMEG, FFRME
39			Angle to fuselage-component interface at XHRS, radians	FRMEG, FFRME

TABLE 23. S6 ARRAY VARIABLES (CONT)

Loc	Variable Name	Engrg Symbol	Description	Subroutine Reference[a]
40			Angle to fuselage-component interface at XVFS, radians	FRMEG, FFRME
41			Angle to fuselage-component interface at XVRS, radians	FRMEG, FFRME
42			Angle to fuselage-component interface at XNFS, radians	FRMEG, FFRME
43			Angle to fuselage-component interface at XNRS, radians	FRMEG, FFRME
44			Angle to fuselage-component interface at XOFS, radians	FRMEG, FFRME
45			Angle to fuselage-component interface at XORS, radians	FRMEG, FFRME
46		EV	Vertical load on right side of XNGT frame, lb	FLDIN, FLDDT, FFRME
47		EV	Vertical load on right side of XNGD frame, lb	FLDIN, FLDDT, FFRME
48		EV	Vertical load on right side of XMGT frame, lb	FLDIN, FLDDT, FFRME
49		EV	Vertical load on right side of XMGD frame, lb	FLDIN, FLDDT, FFRME
50		EV	Vertical load on right side of XWFS frame, lb	FLDIN, FLDDT, FFRME, LDCHK
51		EV	Vertical load on right side of XWIS frame, lb	FLDIN, FLDDT, FFRME, LDCHK
52		EV	Vertical load on right side of XWRS frame, lb	FLDIN, FLDDT, FFRME, LDCHK

TABLE 23. S6 ARRAY VARIABLES (CONT)

Loc	Variable Name	Engrg Symbol	Description	Subroutine Reference[a]
53		EV	Vertical load on right side of XHFS frame, lb	FLDIN, FLDDT, FFRME, LDCHK
54		EV	Vertical load on right side of XHRS frame, lb	FLDIN, FLDDT, FFRME, LDCHK
55		EV	Vertical load on right side of XVFS frame, lb	FLDIN, FLDDT, FFRME
56		EV	Vertical load on right side of XVRS frame, lb	FLDIN, FLDDT, FFRME
57		EV	Vertical load on right side of XNFS frame, lb	FLDIN, FLDDT, FFRME, LDCHK
58		EV	Vertical load on right side of XNRS frame, lb	FLDIN, FLDDT, FFRME, LDCHK
59		EV	Vertical load on right side of XOFS frame, lb	FLDIN, FLDDT, FFRME, LDCHK
60		EV	Vertical load on right side of XORS frame, lb	FLDIN, FLDDT, FFRME, LDCHK
61		EV	Vertical load on left side of XNGT frame, lb	FLDIN, FLDDT, FFRME
62		EV	Vertical load on left side of XNGD frame, lb	FLDIN, FLDDT, FFRME
63		EV	Vertical load on left side of XMGT frame, lb	FLDIN, FLDDT, FFRME
64		EV	Vertical load on left side of XMGD frame, lb	FLDIN, FLDDT, FFRME
65		EV	Vertical load on left side of XWFS frame, lb	FLDIN, FLDDT, FFRME

TABLE 23. S6 ARRAY VARIABLES (CONT)

Loc	Variable Name	Engrg Symbol	Description	Subroutine Reference[a]
66		EV	Vertical load on left side of XWIS frame, lb	FLDIN, FLDDT, FFRME
67		EV	Vertical load on left side of XWRS frame, lb	FLDIN, FLDDT, FFRME
68		EV	Vertical load on left side of XHFS frame, lb	FLDIN, FLDDT, FFRME
69		EV	Vertical load on left side of XHRS frame, lb	FLDIN, FLDDT, FFRME
70		EV	Vertical load on left side of XVFS frame, lb	FLDIN, FLDDT, FFRME
71		EV	Vertical load on left side of XVRS frame, lb	FLDIN, FLDDT, FFRME
72		EV	Vertical load on left side of XNFS frame, lb	FLDIN, FLDDT, FFRME
73		EV	Vertical load on left side of XNRS frame, lb	FLDIN, FLDDT, FFRME
74		EV	Vertical load on left side of XOFS frame, lb	FLDIN, FLDDT, FFRME
75		EV	Vertical load on left side of XORS frame, lb	FLDIN, FLDDT, FFRME
76		EH	Lateral load on right side of XNGT frame, lb	FFRME
77		EH	Lateral load on right side of XNGD frame, lb	FFRME
78		EH	Lateral load on right side of XMGT frame, lb	FFRME

TABLE 23. S6 ARRAY VARIABLES (CONT)

Loc	Variable Name	Engrg Symbol	Description	Subroutine Reference[a]
79		EH	Lateral load on right side of XMGD frame, lb	FFRME
80		EH	Lateral load on right side of XWFS frame, lb	FFRME
81		EH	Lateral load on right side of XWIS frame, lb	FFRME
82		EH	Lateral load on right side of XWRS frame, lb	FFRME
83		EH	Lateral load on right side of XHFS frame, lb	FFRME
84		EH	Lateral load on right side of XHRS frame, lb	FFRME
85		EH	Lateral load on right side of XVFS frame, lb	FLDDT, FFRME
86		EH	Lateral load on right side of XVRS frame, lb	FLDDT, FFRME
87		EH	Lateral load on right side of XNFS frame, lb	FFRME
88		EH	Lateral load on right side of XNRS frame, lb	FFRME
89		EH	Lateral load on right side of XOFS frame, lb	FFRME
90		EH	Lateral load on right side of XORS frame, lb	FFRME
91		EH	Lateral load on left side of XNGT frame, lb	FFRME

TABLE 23. S6 ARRAY VARIABLES (CONT)

Loc	Variable Name	Engrg Symbol	Description	Subroutine Reference[a]
92		EH	Lateral load on left side of XNGD frame, lb	FFRME
93		EH	Lateral load on left side of XMGT frame, lb	FFRME
94		EH	Lateral load on left side of XMGD frame, lb	FFRME
95		EH	Lateral load on left side of XWFS frame, lb	FFRME
96		EH	Lateral load on left side of XWIS frame, lb	FFRME
97		EH	Lateral load on left side of XWRS frame, lb	FFRME
98		EH	Lateral load on left side of XHFS frame, lb	FFRME
99		EH	Lateral load on left side of XHRS frame, lb	FFRME
100		EH	Lateral load on left side of XVFS frame, lb	FLDDT, FFRME
101		EH	Lateral load on left side of XVRS frame, lb	FLDDT, FFRME
102		EH	Lateral load on left side of XNFS frame, lb	FFRME
103		EH	Lateral load on left side of XNRS frame, lb	FFRME
104		EH	Lateral load on left side of XOFS frame, lb	FFRME

TABLE 23. S6 ARRAY VARIABLES (CONT)

Loc	Variable Name	Engrg Symbol	Description	Subroutine Reference[a]
105		EH	Lateral load on left side of XORS frame, lb	FFRME
106		EM	Moment on right side of XNGT frame, in.-lb	FLDIN, FFRME
107		EM	Moment on right side of XNGD frame, in.-lb	FLDIN, FFRME
108		EM	Moment on right side of XMGT frame, in.-lb	FLDIN, FLDDT, FFRME
109		EM	Moment on right side of XMGD frame, in.-lb	FLDIN, FLDDT, FFRME
110		EM	Moment on right side of XWFS frame, in.-lb	FLDIN, FLDDT, FFRME
111		EM	Moment on right side of XWIS frame, in.-lb	FLDIN, FLDDT, FFRME
112		EM	Moment on right side of XWRS frame, in.-lb	FLDIN, FLDDT, FFRME
113		EM	Moment on right side of XHFS frame, in.-lb	FLDIN, FLDDT, FFRME
114		EM	Moment on right side of XHRS frame, in.-lb	FLDIN, FLDDT, FFRME
115		EM	Moment on right side of XVFS frame, in.-lb	FLDIN, FLDDT, FFRME, LDCHK
116		EM	Moment on right side of XVRS frame, in.-lb	FLDIN, FLDDT, FFRME, LDCHK
117		EM	Moment on right side of XNFS frame, in.-lb	FLDIN, FLDDT, FFRME
118		EM	Moment on right side of XNRS frame, in.-lb	FLDIN, FLDDT, FFRME

TABLE 23. S6 ARRAY VARIABLES (CONT)

Loc	Variable Name	Engrg Symbol	Description	Subroutine Reference[a]
119		EM	Moment on right side of XOFS frame, in.-lb	FLDIN, FLDDT, FFRME
120		EM	Moment on right side of XORS frame, in.-lb	FLDIN, FLDDT, FFRME
121		EM	Moment on left side of XNGT frame, in.-lb	FLDIN, FFRME
122		EM	Moment on left side of XNGD frame, in.-lb	FLDIN, FFRME
123		EM	Moment on left side of XMGT frame, in.-lb	FLDIN, FLDDT, FFRME
124		EM	Moment on left side of XMGD frame, in.-lb	FLDIN, FLDDT, FFRME
125		EM	Moment on left side of XWFS frame, in.-lb	FLDIN, FLDDT, FFRME
126		EM	Moment on left side of XWIS frame, in.-lb	FLDIN, FLDDT, FFRME
127		EM	Moment on left side of XWRS frame, in.-lb	FLDIN, FLDDT, FFRME
128		EM	Moment on left side of XHFS frame, in.-lb	FLDIN, FLDDT, FFRME
129		EM	Moment on left side of XHRS frame, in.-lb	FLDIN, FLDDT, FFRME
130		EM	Moment on left side of XVFS frame, in.-lb	FLDIN, FLDDT, FFRME
131		EM	Moment on left side of XVRS frame, in.-lb	FLDIN, FLDDT, FFRME
132		EM	Moment on left side of XNFS frame, in.-lb	FLDIN, FLDDT, FFRME

TABLE 23. S6 ARRAY VARIABLES (CONT)

Loc	Variable Name	Engrg Symbol	Description	Subroutine Reference[a]
133		EM	Moment on left side of XNRS frame, in.-lb	FLDIN, FLDDT, FFRME
134		EM	Moment on left side of XOFS frame, in.-lb	FLDIN, FLDDT, FFRME
135		EM	Moment on left side of XORS frame, in.-lb	FLDIN, FLDDT, FFRME
136	XCG		X-coordinate of vehicle CG, in.	FUSLD, LDCHK
137	FAC1		Limit load to ultimate load factor	FUSLD, LDCHK
138	FNZO		Limit design load factor	FUSLD, LDCHK
139	QDOT		Vehicle pitching acceleration, radians/sec^2	FUSLD, LDCHK
140	TMP		Structure temperature at design condition, °F	FUSLD, MFCNTL, FFRME
141			Shear due to fuselage contents in segment 1, lb	FLDIN, FLDNT, LDCHK
142			Shear due to fuselage contents in segment 2, lb	FLDIN, FLDNT, LDCHK
143			Shear due to fuselage contents in segment 3, lb	FLDIN, FLDNT, LDCHK
144			Shear due to fuselage contents in segment 4, lb	FLDIN, FLDNT, LDCHK
145			Shear due to fuselage contents in segment 5, lb	FLDIN, FLDNT, LDCHK
146			Shear due to fuselage contents in segment 6, lb	FLDIN, FLDNT, LDCHK

TABLE 23. S6 ARRAY VARIABLES (CONT)

Loc	Variable Name	Engrg Symbol	Description	Subroutine Reference[a]
147			Shear due to fuselage contents in segment 7, lb	FLDIN, FLDNT, LDCHK
148			Shear due to fuselage contents in segment 8, lb	FLDIN, FLDNT, LDCHK
149			Shear due to fuselage contents in segment 9, lb	FLDIN, FLDNT, LDCHK
150			Shear due to fuselage contents in segment 10, lb	FLDIN, FLDNT, LDCHK
151			Shear due to fuselage contents in segment 11, lb	FLDIN, FLDNT, LDCHK
152			Shear due to fuselage contents in segment 12, lb	FLDIN, FLDNT, LDCHK
153			Shear due to fuselage contents in segment 13, lb	FLDIN, FLDNT, LDCHK
154			Shear due to fuselage contents in segment 14, lb	FLDIN, FLDNT, LDCHK
155			Shear due to fuselage contents in segment 15, lb	FLDIN, FLDNT, LDCHK
156			Shear due to fuselage contents in segment 16, lb	FLDIN, FLDNT, LDCHK
157			Shear due to fuselage contents in segment 17, lb	FLDIN, FLDNT, LDCHK
158			Shear due to fuselage contents in segment 18, lb	FLDIN, FLDNT, LDCHK
159			Shear due to fuselage contents in segment 19, lb	FLDIN, FLDNT, LDCHK

TABLE 23. S6 ARRAY VARIABLES (CONT)

Loc	Variable Name	Engrg Symbol	Description	Subroutine Reference[a]
160			Shear due to fuselage contents in segment 20, lb	FLDIN, FLDNT, LDCHK
161		V	Design shear at cut 1, lb	FLDIN, FLDNT, LDCHK
162		V	Design shear at cut 2, lb	FLDIN, FLDNT, LDCHK
163		V	Design shear at cut 3, lb	FLDIN, FLDNT, LDCHK
164		V	Design shear at cut 4, lb	FLDIN, FLDNT, LDCHK
165		V	Design shear at cut 5, lb	FLDIN, FLDNT, LDCHK
166		V	Design shear at cut 6, lb	FLDIN, FLDNT, LDCHK
167		V	Design shear at cut 7, lb	FLDIN, FLDNT, LDCHK
168		V	Design shear at cut 8, lb	FLDIN, FLDNT, LDCHK
169		V	Design shear at cut 9, lb	FLDIN, FLDNT, LDCHK
170		V	Design shear at cut 10, lb	FLDIN, FLDNT, LDCHK
171		V	Design shear at cut 11, lb	FLDIN, FLDNT, LDCHK
172		V	Design shear at cut 12, lb	FLDIN, FLDNT, LDCHK

TABLE 23. S6 ARRAY VARIABLES (CONT)

Loc	Variable Name	Engrg Symbol	Description	Subroutine Reference[a]
173		V	Design shear at cut 13, lb	FLDIN, FLDNT, LDCHK
174		V	Design shear at cut 14, lb	FLDIN, FLDNT, LDCHK
175		V	Design shear at cut 15, lb	FLDIN, FLDNT, LDCHK
176		V	Design shear at cut 16, lb	FLDIN, FLDNT, LDCHK
177		V	Design shear at cut 17, lb	FLDIN, FLDNT, LDCHK
178		V	Design shear at cut 18, lb	FLDIN, FLDNT, LDCHK
179		V	Design shear at cut 19, lb	FLDIN, FLDNT, LDCHK
180			Not used	
181		M	Design moment at cut 1, in.-lb	FLDIN, FLDNT, LDCHK
182		M	Design moment at cut 2, in.-lb	FLDIN, FLDNT, LDCHK
183		M	Design moment at cut 3, in.-lb	FLDIN, FLDNT, LDCHK
184		M	Design moment at cut 4, in.-lb	FLDIN, FLDNT, LDCHK
185		M	Design moment at cut 5, in.-lb	FLDIN, FLDNT, LDCHK
186		M	Design moment at cut 6, in.-lb	FLDIN, FLDNT, LDCHK

TABLE 23. S6 ARRAY VARIABLES (CONCL)

Loc	Variable Name	Engrg Symbol	Description	Subroutine Reference[a]
187		M	Design moment at cut, in.-lb	FLDIN, FLDNT, LDCHK
188		M	Design moment at cut 8, in.-lb	FLDIN, FLDNT, LDCHK
189		M	Design moment at cut 9, in.-lb	FLDIN, FLDNT, LDCHK
190		M	Design moment at cut 10, in.-lb	FLDIN, FLDNT, LDCHK
191		M	Design moment at cut 11, in.-lb	FLDIN, FLDNT, LDCHK
192		M	Design moment at cut 12, in.-lb	FLDIN, FLDNT, LDCHK
193		M	Design moment at cut 13, in.-lb	FLDIN, FLDNT, LDCHK
194		M	Design moment at cut 14, in.-lb	FLDIN, FLDNT, LDCHK
195		M	Design moment at cut 15, in.-lb	FLDIN, FLDNT, LDCHK
196		M	Design moment at cut 16, in.-lb	FLDIN, FLDNT, LDCHK
197		M	Design moment at cut 17, in.-lb	FLDIN, FLDNT, LDCHK
198		M	Design moment at cut 18, in.-lb	FLDIN, FLDNT, LDCHK
199		M	Design moment at cut 19, in.-lb	FLDIN, FLDNT, LDCHK
200			Not used	

NOTE: S6 array starts at common location 3691. This array is calculated for each design condition and stored in mass storage file records 61 through 84.

[a]All variables in this array are referenced in subroutine FUSLD, which writes the file records, and subroutines FFRME and LDCHK, which read the file records. These routines are referenced only when specific variables in this array are calculated or used.

TABLE 24. TM ARRAY VARIABLES

Loc	Engrg Symbol	Description	Subroutine Reference
1		Temperature (design), °F	MATLF, MFCNTL, MATLP1
2	μ	Poisson's ratio	MATLF, MFCNTL, MATLP1
3	A_C	Constant for compression stress-strain curve fit, in./in.	MATLF, MFCNTL, MATLP1
4	B_C	Constant for compression stress-strain curve fit, in.^{2}/lb	MATLF, MFCNTL, MATLP1
5	E_C	Compression modulus of elasticity, psi	MATLF, MFCNTL, MATLP1
6	F_{CY}	Compression yield stress, psi	MATLF, MFCNTL, MATLP1
7	A_T	Constant for tension stress-strain curve fit, in./in.	MATLF, MFCNTL, MATLP1
8	B_T	Constant for tension stress-strain curve fit, in.^{2}/lb	MATLF, MFCNTL, MATLP1
9	E_T	Tension modulus of elasticity, psi	MATLF, MFCNTL, MATLP1
10	F_{TY}	Tension yield stress, psi	MATLF, MFCNTL, MATLP1
11	ρ	Material density, lb/in.^{3}	MATLF, MFCNTL, MATLP1
12	F_{TU}	Ultimate tensile strength, psi	MATLF, MFCNTL, MATLP1
13	F_{CPL}	Compressive stress at proportional limit, psi	MATLF, MFCNTL, MATLP1

TABLE 24. TM ARRAY VARIABLES (CONT)

Loc	Engrg Symbol	Description	Subroutine Reference
14	E_{RT}	Modulus of elasticity at room temperature, psi	MATLF, MFCNTL, MATLP1
15	G_{RT}	Shear modulus at room temperature, psi	MATLF, MFCNTL, MATLP1
16	F_{SU}	Ultimate shear strength, psi	MATLF, MFCNTL, MATLP1
17	F_{BRU}	Ultimate bearing strength, psi	MATLF, MFCNTL, MATLP1
18	K_{FTU}	Fraction of ultimate tensile strength at endurance limit for a polished specimen under cyclic load	MATLF, MFCNTL, MATLP1
19	K_{FTU}	Fraction of ultimate tensile strength for shell-bending	MATLF, MFCNTL, MATLP1
20	K_{FTU}	Fraction of ultimate tensile strength under cyclic pressure load	MATLF, MFCNTL, MATLP1
21-30		Not used	
31	μ	Poisson's ratio (interpolated)	MATLF
32	ϵ_{C1}	Compressive strain at point 1 (interpolated), in./in.	MATLF
33	ϵ_{C5}	Compressive strain at point 5 (interpolated), in./in.	MATLF
34	σ_{C1}	Compressive stress at point 1 (interpolated), psi	MATLF

TABLE 24. TM ARRAY VARIABLES (CONT)

Loc	Engrg Symbol	Description	Subroutine Reference
35	σ_{C2}	Compressive stress at point 2 (interpolated), psi	MATLF
36	σ_{C3}	Compressive stress at point 3 (interpolated), psi	MATLF
37	σ_{C4}	Compressive stress at point 4 (interpolated), psi	MATLF
38	σ_{C5}	Compressive stress at point 5 (interpolated), psi	MATLF
39	ϵ_{T1}	Tensile strain at point 1 (interpolated), in./in.	MATLF
40	ϵ_{T5}	Tensile strain at point 5 (interpolated), in./in.	MATLF
41	σ_{T1}	Tensile stress at point 1 (interpolated), psi	MATLF
42	σ_{T2}	Tensile stress at point 2 (interpolated), psi	MATLF
43	σ_{T3}	Tensile stress at point 3 (interpolated), psi	MATLF
44	σ_{T4}	Tensile stress at point 4 (interpolated), psi	MATLF
45	σ_{T5}	Tensile stress at point 5 (interpolated), psi	MATLF
46	F_{TU}	Ultimate tensile strength (interpolated), psi	MATLF
47	F_{SU}	Ultimate shear strength (interpolated), psi	MATLF

TABLE 24. TM ARRAY VARIABLES (CONT)

Loc	Engrg Symbol	Description	Subroutine Reference
48	F_{BRU}	Ultimate bearing strength (interpolated), psi	MATLF
49		Not used	
50	K_{FTU}	Fraction of ultimate tensile strength at endurance limit (interpolated)	MATLF
51	K_{FTU}	Fraction of ultimate tensile strength for shell-bending	MATLF
52	K_{FTU}	Fraction of ultimate tensile strength under cyclic pressure load (interpolated)	MATLF
53	K_{FTU}	Fatigue factor for wing (interpolated)	MATLF
54	K_{FTU}	Fatigue factor for wing (interpolated)	MATLF
55		Temperature of material property data from library at temperature lower than design temperature, °F. Data in locations 56 through 79 are in same order as they appear in locations 31 through 54	MATLF
56	μ		MATLF
57	ϵ_{C1}		MATLF
58	ϵ_{C5}		MATLF

TABLE 24. TM ARRAY VARIABLES (CONT)

Loc	Engrg Symbol	Description	Subroutine Reference
59	σ_{C1}		MATLF
60	σ_{C2}		MATLF
61	σ_{C3}		MATLF
62	σ_{C4}		MATLF
63	σ_{C5}		MATLF
64	ϵ_{T1}		MATLF
65	ϵ_{T5}		MATLF
66	σ_{T1}		MATLF
67	σ_{T2}		MATLF
68	σ_{T3}		MATLF
69	σ_{T4}		MATLF
70	σ_{T5}		MATLF
71	F_{TU}		MATLF
72	F_{SU}		MATLF
73	F_{BRU}		MATLF
74			

TABLE 24. TM ARRAY VARIABLES (CONT)

Loc	Engrg Symbol	Description	Subroutine Reference
75	K_{FTU}		MATLF
76	K_{FTU}		MATLF
77	K_{FTU}		MATLF
78	K_{FTU}		MATLF
79	K_{FTU}		MATLF
80		Temperature of material property data from library at temperature higher than design temperature, °F. Data in locations 81 through 104 are in same order as they appear in locations 31 through 54	MATLF
81	μ		MATLF
82	ε_{C1}		MATLF
83	ε_{C5}		MATLF
84	σ_{C1}		MATLF
85	σ_{C2}		MATLF
86	σ_{C3}		MATLF
87	σ_{C4}		MATLF
88	σ_{C5}		MATLF

TABLE 24. TM ARRAY VARIABLES (CONT)

Loc	Engrg Symbol	Description	Subroutine Reference
89	ϵ_{T1}		MATLF
90	ϵ_{T5}		MATLF
91	σ_{T1}		MATLF
92	σ_{T2}		MATLF
93	σ_{T3}		MATLF
94	σ_{T4}		MATLF
95	σ_{T5}		MATLF
96	F_{TU}		MATLF
97	F_{SU}		MATLF
98	F_{BRU}		MATLF
99			
100	K_{FTU}		MATLF
101	K_{FTU}		MATLF
102	K_{FTU}		MATLF
103	K_{FTU}		MATLF
104	K_{FTU}		MATLF

TABLE 24. TM ARRAY VARIABLES (CONCL)

Loc	Engrg Symbol	Description	Sunroutine Reference
105		Not used	
⋮			
109		Not used	
110	$A_{2,5}$	Curve fit constant for fit through points 2 and 5, in./in.	MATLF
111	$A_{3,5}$	Curve fit constant for fit through points 3 and 5, in./in.	MATLF
112	$A_{4,5}$	Curve fit constant for fit through points 4 and 5, in./in.	MATLF
113	$B_{2,5}$	Curve fit constant for fit through points 2 and 5, in^2/lb	MATLF
114	$B_{3,5}$	Curve fit constant for fit through points 3 and 5, in^2/lb	MATLF
115	$B_{4,5}$	Curve fit constant for fit through points 4 and 5, in^2/lb	MATLF
116		Summation of errors squared for curve 2,5	MATLF
117		Summation of errors squared for curve 3,5	MATLF
118		Summation of errors squared for curve 4,5	MATLF
119		Not used	
⋮			
160		Not used	

TM array starts at common location 3501. This array is used for interpolation of material data.

TABLE 25. TMD ARRAY VARIABLES

Loc	Variable Name	Engrg Symbol	Description	Subroutine Description
1	MATLI		Material identification number	MFCNTL
2		ρ	Material density, lb/in.^{3}	MFCNTL
3		E_{RT}	Modulus of elasticity at room temperature, psi	MFCNTL
4		G_{RT}	Shear modulus at room temperature, psi	MFCNTL
5		RA	Reduction area for fatigue	MFCNTL
6			Not used	
.				
.				
109			Not used	
110			Temperature of material for data in locations 111 through 134, °F	MFCNTL, MATLF
111		μ	Poisson's ratio	MFCNTL, MATLF
112		ϵ_{C1}	Compressive strain at point 1, in./in.	MFCNTL, MATLF
113		ϵ_{C5}	Compressive strain at point 5, in./in.	MFCNTL, MATLF
114		σ_{C1}	Compression stress at point 1, psi	MFCNTL, MATLF
115		σ_{C2}	Compression stress at point 2, psi	MFCNTL, MATLF
116		σ_{C3}	Compression stress at point 3, psi	MFCNTL, MATLF
117		σ_{C4}	Compression stress at point 4, psi	MFCNTH, MATLF
118		σ_{C5}	Compression stress at point 5, psi	MFCNTL, MATLF

TABLE 25. LAD ARRAY VARIABLES (CONT)

Loc	Variable Name	Engrg Symbol	Description	Subroutine Description
119		ε_{T1}	Tensile strain at point 1, in./in.	MFCNTL, MATLF
120		ε_{T5}	Tensile strain at point 5, in./in.	MFCNTL, MATLF
121		σ_{T1}	Tension stress at point 1, psi	MFCNTL, MATLF
122		σ_{T2}	Tension stress at point 2, psi	MFCNTL, MATLF
123		σ_{T3}	Tension stress at point 3, psi	MFCNTL, MATLF
124		σ_{T4}	Tension stress at point 4, psi	MFCNTL, MATLF
125		σ_{T5}	Tension stress at point 5, psi	MFCNTL, MATLF
126		F_{TU}	Ultimate tensile strength, psi	MFCNTL, MATLF
127		F_{SU}	Ultimate shear strength, psi	MFCNTL, MATLF
128		F_{BRU}	Ultimate bearing strength, psi	MFCNTL, MATLF
129			Not used	
130		K_{FTU}	Fraction of ultimate tensile strength at endurance limit	MFCNTL, MATLF
131		K_{FTU}	Fraction of ultimate tensile strength for shell bending	MFCNTL, MATLF
132		K_{FTU}	Fraction of ultimate tensile strength under cyclic pressure load	MFCNTL, MATLF
133		K_{FTU}	Fatigue factor for wing	MFCNTL, MATLF

TABLE 25. TMD ARRAY VARIABLES (CONT)

Loc	Variable Name	Engrg Symbol	Description	Subroutine Description
134		K_{FTU}	Fatigue factor for wing	MFCNTL, MATLF
135			Second temperature of material for data in locations 136 through 159, °F	MFCNTL, MATLF
136 . .			Refer to description of location 111 through	MFCNTL, MATLF
159		K_{FTU}	description of location 134	MFCNTL, MATLF
160			Third temperature of material for data in locations 161 through 184, °F	MFCNTL, MATLF
161 . . .			Refer to description of location 111 through	MFCNTL, MATLF
184		K_{FTU}	description of location 134	MFCNTL, MATLF
185			Fourth temperature of material for data in locations 186 through 209, °F	MFCNTL, MATLF
186 . .			Refer to description of location 111 through	MFCNTL, MATLF
209		K_{FTU}	description of location 134	MFCNTL, MATLF
210			Fifth temperature of material for data in locations 211 through 234, °F	MFCNTL, MATLF
211 . . .			Refer to description of location 111 through	MFCNTL, MATLF
234		K_{FTU}	description of location 134	MFCNTL, MATLF

TABLE 25. TMD ARRAY VARIABLES (CONCL)

Loc	Variable Name	Engrg Symbol	Description	Subroutine Description
235			Sixth temperature of material for data in locations 236 through 259, °F	MFCNTL, MATLF
236			Refer to description of location 111 through	MFCNTL, MATLF
.				
.				
.				
259		K_{FTU}	description of location 134	MFCNTL, MATLF
260			Not used	
.				
.				
284			Not used	
285	RM(1)		Alphanumeric material descriptive title	MFCNTL, MATLP1
.				
.				
.				
300	RM(16)			MFCNTL, MATLP1

TMD array starts at common location 3201. This array is part of the permanent data file and is stored in mass storage file records 41 through 60.

TABLE 26. TMS ARRAY VARIABLES

Loc	Engrg Symbol	Description	Subroutine Reference
1		Temperature of cover material, °F, locations 2 through 20, contains cover material data at this temperature	MFCNTL, LDCHK
2	μ	Poisson's ratio	MFCNTL, LDCHK
3	A_C	Constant for compression stress-strain curve fit, in./in.	MFCNTL, LDCHK
4	B_C	Constant for compression stress-strain curve fit, in.^{2}/lb	MFCNTL, LDCHK
5	E_C	Compression modulus of elasticity, psi	MFCNTL, QCRIT, LDCHK
6	F_{CY}	Compression yield stress, psi	MFCNTL, LDCHK
7	A_T	Constant for tension stress-strain curve fit, in./in.	MFCNTL, LDCHK
8	B_T	Constant for tension stress-strain curve fit, in.^{2}/lb	MFCNTL, LDCHK
9	E_T	Tension modulus of elasticity, psi	MFCNTL, LDCHK
10	F_{TY}	Tension yield stress, psi	MFCNTL, LDCHK
11	ρ	Material density, lb/in.^{3}	MFCNTL, LDCHK
12	F_{TU}	Ultimate tensile strength, psi	MFCNTL, LDCHK
13	F_{CPL}	Compressive stress at proportional limit, psi	MFCNTL, LDCHK
14	E_{RT}	Modulus of elasticity at room temperature, psi	MFCNTL, LDCHK

TABLE 26. TMS ARRAY VARIABLES (CONT)

Loc	Engrg Symbol	Description	Subroutine Reference
15	G_{RT}	Shear modulus at room temperature, psi	MFCNTL, LDCHK
16	F_{SU}	Ultimate shear strength, psi	MFCNTL, LDCHK
17	F_{BRU}	Ultimate bearing strength, psi	MFCNTL, LDCHK
18	K_{FTU}	Fraction of ultimate tensile strength at endurance limit	MFCNTL, LDCHK
19	K_{FTU}	Fraction of ultimate tensile strength for shell bending	MFCNTL, LDCHK
20	K_{FTU}	Fraction of ultimate tensile strength under cyclic pressure load	MFCNTL, LDCHK
21		Not used	
⋮			
30		Not used	
31		Temperature of longeron material, °F, locations 32 through 50, contains longeron material data at this temperature	MFCNTL, LDCHK
32	μ		MFCNTL, LDCHK
33	A_C		MFCNTL, LDCHK
34	B_C		MFCNTL, LDCHK
35	E_C		MFCNTL, LDCHK

TABLE 26. TMS ARRAY VARIABLES (CONT)

Loc	Engrg Symbol	Description	Subroutine Reference
36	F_{CY}		MFCNTL, LDCHK
37	A_T		MFCNTL, LDCHK
38	B_T		MFCNTL, LDCHK
39	E_T		MFCNTL, LDCHK
40	F_{TY}		MFCNTL, LDCHK
41	ρ		MFCNTL, LDCHK
42	F_{TU}		MFCNTL, LDCHK
43	F_{CPL}		MFCNTL, LDCHK
44	E_{RT}		MFCNTL, LDCHK
45	G_{RT}		MFCNTL, LDCHK
46	F_{SU}		MFCNTL, LDCHK
47	F_{BRU}		MFCNTL, LDCHK
48	K_{FTU}		MFCNTL, LDCHK
49	K_{FTU}		MFCNTL, LDCHK
50	K_{FTU}		MFCNTL, LDCHK
51		Not used	
⋮			
60		Not used	

TABLE 26. TMS ARRAY VARIABLES (CONT)

Loc	Engrg Symbol	Description	Subroutine Reference
61		Temperature of major frame material, °F, locations 62 through 80, contains major frame material data at this temperature	MFCNTL
62	μ		MFCNTL, SFOAWE
63	A_C		MFCNTL
64	B_C		MFCNTL
65	E_C		MFCNTL
66	F_{CY}		MFCNTL, SFOAWE, MISCWT
67	A_T		MFCNTL
68	B_T		MFCNTL
69	E_T		MFCNTL
70	F_{TY}		MFCNTL
71	ρ		MFCNTL, SFOAWE, MISCWT
72	F_{TU}		MFCNTL, SFOAWE, MISCWT
73	F_{CPL}		MFCNTL
74	E_{RT}		MFCNTL
75	G_{RT}		MFCNTL

TABLE 26. TMS ARRAY VARIABLES (CONT)

Loc	Engrg Symbol	Description	Subroutine Reference
76	F_{SU}		MFCNTL, SFOAWE, MISCWT
77	F_{BRU}		MFCNTL, MISCWT
78	K_{FTU}		MFCNTL
79	K_{FTU}		MFCNTL
80	K_{FTU}		MFCNTL
81		Not used	
⋮			
90		Not used	
91		Temperature of minor frame material, °F, locations 92 through 110, contains minor frame material data at this temperature	MFCNTL, LDCHK
92	μ		MFCNTL, LDCHK
93	A_C		MFCNTL, LDCHK
94	B_C		MFCNTL, LDCHK
95	E_C		MFCNTL, LDCHK
96	F_{CY}		MFCNTL, LDCHK
97	A_T		MFCNTL, LDCHK
98	B_T		MFCNTL, LDCHK

TABLE 26. TMS ARRAY VARIABLES (CONCL)

Loc	Engrg Symbol	Description	Subroutine Reference
99	E_T		MFCNTL, LDCHK
100	F_{TY}		MFCNTL, LDCHK
101	ρ		MFCNTL, LDCHK
102	F_{TU}		MFCNTL, LDCHK
103	F_{CPL}		MFCNTL, LDCHK
104	E_{RT}		MFCNTL, LDCHK
105	G_{RT}		MFCNTL, LDCHK
106	F_{SU}		MFCNTL, LDCHK
107	F_{BRU}		MFCNTL, LDCHK
108	K_{FTU}		MFCNTL, LDCHK
109	K_{FTU}		MFCNTL, LDCHK
110	K_{FTU}		MFCNTL, LDCHK
111		Not used	
⋮			
120		Not used	

TMS array starts at common location 1391. This array is calculated for each load condition and stored in mass storage file records 85 through 108.

TABLE 27. TOT ARRAY VARIABLES

Loc	Variable Name	Description	Subroutine Reference
1	STOT	Total shell surface area, in.^{2}	GEOMF1, SPRINT, SECOST
2	VOLT	Total shell volume, in.^{3}	GEOMF1, SPRINT
3		Total cover, longeron, minor frame weight per inch at synthesis cut for first stringer spacing, lb/in.	LONGS
4		Total cover, longeron, minor frame weight per inch at synthesis cut for second stringer spacing, lb/in.	LONGS
5		Longeron weight per inch at synthesis cut, lb/in.	FBEND, LONGS
6		Cover weight per inch at synthesis cut, lb/in.	FCOVER, LONGS
7		Minor frame weight per inch at synthesis cut, lb/in.	MINFR, LONGS
8		Total cover, longeron, minor frame weight per inch at synthesis cut for first frame spacing, lb/in.	FPANEL
9		Total cover, longeron, minor frame weight per inch at synthesis cut for second frame spacing, lb/in.	FPANEL
10-18		Not used	
19		Maximum fuselage depth, in.	GEOMF1, SECOST
20		Maximum fuselage width, in.	GEOMF1, SECOST

TOT array starts at common location 2201.

TABLE 28. TT ARRAY VARIABLES

Loc	Engrg Symbol	Description	Subroutine Reference
1		Material identification number	MPCNTL, MATLF
2		Material temperature, °F	MPCNTL, MATLF
3	A	Constant for stress-strain curve fit and interpolation factor, in./in.	MATLF
4	B	Constant for stress-strain curve fit, in.^{2}/lb	MATLF
5	$E = \sigma_1/\varepsilon_1$	Modulus of elasticity, psi	MATLF
6	ε_1	Strain at point 1 (proportional limit), in./in.	MATLF
7	ε_2	Strain at point 2, in./in.	MATLF
8	ε_3	Strain at point 3, in./in.	MATLF
9	ε_4	Strain at point 4, in./in.	MATLF
10	ε_5	Strain at point 5 (yield stress), in./in.	MATLF
11	σ_1	Stress at point 1 (proportional limit), psi	MATLF
12	σ_2	Stress at point 2, psi	MATLF
13	σ_3	Stress at point 3, psi	MATLF
14	σ_4	Stress at point 4, psi	MATLF
15	σ_5	Stress at point 5 (yield stress), psi	MATLF
16	1/E	Reciprocal of modulus of elasticity, in.^{2}/lb	MATLF

TABLE 28. TT ARRAY VARIABLES (CONCL)

Loc	Engrg Symbol	Description	Subroutine Reference
17	$\varepsilon_5 - \sigma_5/E$	Strain increment at yield stress, in./in.	MATLF
18	$\varepsilon_2 - \sigma_2/E$, $\varepsilon_3 - \sigma_3/E$, $\varepsilon_4 - \sigma_4/E$	Strain increment at other points, in./in.	MATLF
19	$\sigma_5 - \sigma_2$, $\sigma_5 - \sigma_3$, $\sigma_5 - \sigma_4$	Stress increments, psi	MATLF
20	$(d\sigma_1/d\varepsilon_1) = 1/(1/E + ABe^{B\sigma_1})$	Curve fit calculation of modulus of elasticity at proportional limit, psi	MATLF
21	$1 - (d\sigma_1/d\varepsilon_1)/E$	Error in calculated value of modulus of elasticity	MATLF
22	$\sigma n/E + Ae^{B\sigma n}$; $n = 1,5$	Calculated strain at points 1 through 5, in./in.	MATLF
23		Error in calculated value of strains	MATLF
24		Summation of errors squared which produce best curve fit	MATLF

TT array starts at common location 3661. This array is used for tension and compression stress-strain curve fit.

TABLE 29. IP ARRAY VARIABLES (IPRINT BLOCK)

Loc	Description	Figure Reference	Subroutine Reference
1 . 70	Locations 1 through 70 are print controls for other program modules		
71	Output print control for input loads, inertia, and speed-profile data	B-1, B-2, B-3	FUSLD
72	Output print control for material property data at first load condition	B-4, B-5, B-6, B-7	MFCNTL (MATLP1)
73	Output print control for material property data at all design load conditions	B-8	MFCNTL
74	Output print control for net ultimate shell loads array (FUSLD), and input and corrected data (DUMMY1)	B-9, B-10	FUSLD, DUMMY1
75	Output print control for frame shape parameters and external loads and design temperature at each unique frame	B-11	FRMND1, FFRME
76	Output print control for major frame coordinates, internal loads, and final synthesized elements	B-12, B-13	FRMLD, SFOAWE
77	Output print control for detail weights of each unique major frame	B-14	FFRME
78	Output print control for first 200 cells of scratch region (common locations 2001 through 2200) prior to exit from MINFR	B-15	MINFR
79	Output print control for first 200 cells of scratch region (common locations 2001 through 2200) after completion of synthesis at each shell cut	B-16	FUSSHL
80	Output print control for input data, detail sizing data, and detail shell element weights in tabular form	B-17 through B-29	SPRINT

TABLE 30. FDAT ARRAY VARIABLES (FDATT BLOCK)

Loc	Description	Subroutine Reference
1 • 30	Locations 1 through 30 are used to store wing and empennage weight data	
31	Basic structure weight, lb	FUS02
32	Secondary structure weight (AN-9102-D, page 9), lb	FUS02
33	Not used	FUS02
34	Doors, panels, and miscellaneous structure weight (AN-9102-D, page 10), lb	FUS02
35	Total fuselage weight, lb	FUS02
36	X-CG of fuselage structure, in.	FUS02
37	Not used	FUS02
38	Not used	
39	Not used	
40	Not used	
41 • 50	Locations 41 through 50 are used to store landing gear weight data	
51 • 60	Locations 51 through 60 are used to store nacelle and air induction system weight data	

TABLE 31. MASS STORAGE FILE RECORDS

Record No.	Variable	Write Routine	Read Routines	Description
24	D (2000)	MAIN	FUS01	Refer to common region discussion of variables.
33	FUS (672)	MAIN	FUSLD	Refer to Tables 30 and 31 in subroutine FUSLD discussion.
34	FUSDWI (480)	MAIN	FUSLD	Refer to Table 32 in subroutine FUSLD discussion.
41-60	TMD (300)	MAIN	MFCNTL	Refer to Table 23 for discussion of material property variables.
61-84	S6 (200)	FUSLD	FFRME, LDCHK	Refer to Table 21 for discussion of net loads array variables.
85-108	TMS (120)	MFCNTL	SFOAWE, LDCHK	Refer to Table 24 for discussion of interpolated material property array variables.

SUBROUTINE DESCRIPTIONS

PROGRAM FUS01

General Description

Deck name:	FUS01
Entry name:	OVERLAY (5HALPHA, 11, 0)
Called by:	OLAY00
Subroutines called:	GEOMF1, INERT1, GEOMF2, INERT2, FUSLD, FFRME

This is the control routine for the first overlay of the fuselage weight estimation module. This routine initializes the common region and reads the input data from mass storage file record 24. The routine transfers the construction geometry and print controls from the CIND array to the ND array. The maximum cabin pressure is determined by examination of the PRES array and stored in CIND(28).

Arrays and Variables Used

CIND	Refer to Tables 10 and 11
PRES	Refer to Table 10

Arrays and Variables Calculated

CIND	Refer to Tables 10 and 11
IAV	Refer to Table 10
ICST	Refer to Table 10
IMIL	Refer to Table 10
KC	Refer to Table 10
NC	Refer to Table 10

Labeled Common Arrays

None

Mass Storage File Records

Read by Program
Record 24

Written by Program
None

Error Messages

None

SUBROUTINE GEOMF1

General Description

Deck name:	GEOMF1
Entry name:	GEOMF1
Called by:	FUS01
Subroutines called:	None

This subroutine calculates the external shell geometry at the synthesis cuts for rounded rectangle shell shapes. The routine uses linear interpolation between the input geometry data points. The perimeter code (KC) is used to determine the operation required on the input data. If KC is 1, the perimeter is input in the PI array. If KC is 2, the perimeter factor is input data in the PI array, and the perimeter is calculated and stored in the PI array.

The flat and curved portions of the shell are calculated from the input data. Peripheral length and nominal radius of curvature are calculated for the upper, lower, and side sectors. If the corner radius is less than 2 inches, the radius or curvature is assumed to be infinite, and zero is used to designate the flat panels. Should a synthesis segment be less than or equal to 2 inches in length, the geometry at the aft end of the segment is used to calculate the segment surface area and volume. Equivalent diameter is used to calculate the surface area and volume of the nose and tail segments.

Arrays and Variables Used

D	Refer to Tables 10 and 12
DI	Refer to Table 10
KC	Refer to Table 10
NC	Refer to Table 10
PI	Refer to Table 10
XI	Refer to Table 10
XO	Refer to Table 10
ZI	Refer to Table 10

Arrays and Variables Calculated

BL	Refer to Table 10
BS	Refer to Table 10
BU	Refer to Table 10
DELX	Refer to Table 10
DOO	Refer to Table 10
PER	Refer to Table 10
PI	Refer to Table 10

RCL	Refer to Table 10
RCS	Refer to Table 10
RCU	Refer to Table 10
RO	Refer to Table 10
S	Intermediate calculations
SF	Refer to Table 10
STOT	Refer to Table 10
S1	Shell depth at synthesis cuts, in.
S2	Shell width at synthesis cuts, in.
S3	Shell cross-section area at synthesis cuts, in.^{2}
TOT	Refer to Tables 10 and 27
VOL	Refer to Table 10
VOLT	Refer to Table 10
WO	Refer to Table 10
XBAR	Refer to Table 10
XO	Refer to Table 10
ZO	Refer to Table 10

Labeled Common Arrays

None

Mass Storage File Records

None

Error Messages

- WARNING FROM GEOMF1
  SHAPE IS ROUNDED RECT. SECTION XX CORRECTION IS Y.YYY

- WARNING FROM GEOMF1
  SHAPE IS RECT. SECTION XX CORRECTION IS Y.YYY

The foregoing warning messages appear when the program encounters some difficulty in fitting a shape based on the input geometry. XX locates the synthesis cut at which the difficulty occurred, and Y.YYY is the scaling factor applied to the depth and width. Perimeter is assumed to be the independent variable and is not revised. Should the scaling factor be close to 1.0, no corrective action is required. Should the scaling factor indicate a significant revision, input data should be examined for possible errors. Diamond-shaped fuselages cannot be fit properly by this routine and, therefore, judgment adjustments might be required.

SUBROUTINE INERT1

General Description

Deck Name:	INERT1
Entry name:	INERT1
Called by:	FUS01
Subroutines called:	None

This subroutine calculates the unit pitch, roll, and yaw weight moments of inertia for the fuselage shell segments. The unit inertia is based on a 1-pound weight uniformly distributed within the enclosed volume of the segment. The average contour geometry is used for the intermediate synthesis segments. However, if a synthesis segment is less than 2 inches in length, the geometry at the aft end of the segment is used. Mean equivalent diameter is used to calculate unit weight inertias for the nose and tail segments.

Arrays and Variables Used

D	Refer to Tables 10 and 12
DELX	Refer to Table 10
DOO	Refer to Table 10
NC	Refer to Table 10
PER	Refer to Table 10
PI	Refer to Table 10
RO	Refer to Table 10
WO	Refer to Table 10
XBAR	Refer to Table 10
XO	Refer to Table 10

Arrays and Variables Calculated

S	Intermediate calculations
UIX	Refer to Table 10
UIY	Refer to Table 10
UIZ	Refer to Table 10

Labeled Common Arrays

None

Mass Storage File Records

None

Error Messages

None

SUBROUTINE GEOMF2

General Description

Deck name:	GEOMF2
Entry name:	GEOMF2
Called by:	FUS01
Subroutines called:	None

This subroutine is currently a dummy routine that would be written to evaluate the geometry for elliptical fuselage shapes.

SUBROUTINE INERT2

General Description

Deck name:	INERT2
Entry name:	GEOMF2
Called by:	FUS01
Subroutines called:	None

This subroutine is currently a dummy routine that would be written to calculate the unit weight inertias of fuselage and contents for elliptical fuselage shapes.

SUBROUTINE FUSLD

General Description

Deck name:	FUSLD
Entry name:	FUSLD
Called by:	FU301
Subroutines called:	FRMEG, FLDIN, DUMMY1, FLDDT, MFCNTL, QCRIT

This subroutine controls the organization of input load data and the calculation of net fuselage loads and corresponding material property data. This routine also controls the evaluation of critical local panel flutter criteria.

Input fuselage loads in the FUS array are read from mass storage file record 33. Input inertia and speed-altitude profile data in the FUSDWI array are read from mass storage file record 34. The FUS and FUSDWI arrays are stored in the subroutine region of the program. The FUS array may have two different arrangements of data. The first word in this array (LDT) defines the data arrangement.

If LDT is 0 or 2, the FUS array contains 24 records, each consisting of 28 data values. If LDT is 0, the data in the first 28-word record are not complete and the next record is examined. In this case, one or all of these records may contain data. If the first word in the record (LDT) is 2, the record contains the vehicle design data and component airloads which are combined with the inertia data as shown in Table 32 and stored in the S22 array. The load condition counter (NOC) is used to count the actual number of design conditions defined in the FUS array. The program can handle a maximum of 23 conditions. Each time a design condition is defined, subroutines DUMMY1 and FLDDT are called to calculate the net ultimate loads for that specific condition.

If LDT is 1 (an option currently inactive in SWEEP), the FUS array contains seven records, each consisting of 90 data values. The input data are in the form of net limit vertical bending moments and shears which are transferred to the S22 array. Subroutine FLDIN is called to process the data for each input design condition. If the first data location in a subsequent 90 word record is 0, the number of conditions (NOC) is defined by the number of records processed prior to that point.

The net loads for each of the design conditions (S6 array) are written into mass storage file records 61 through 84. The load condition counter (LCN) and the total number of conditions examined (NOC) are stored in common. LCN is used in subroutine MFCNTL to maintain a parallel set of material property records.

For each design condition, the mach number and altitude are used to check on critical local panel flutter design. Subroutine QCRIT is called to evaluate the flutter data. The vehicle limit speed-altitude profile data in the FUSDWI array are also used to check on flutter.

Arrays and Variables Used

ALT	Refer to Table 10
D	Refer to Tables 10 and 12
DGW	Refer to Table 10
FAC1	Refer to Table 10
FMN	Refer to Table 10
FNZO	Refer to Table 10
FUS	Refer to Table 34 and 35
FUSDWI	Refer to Table 36
HGT	Altitude at speed-altitude profile points, ft (refer to Table 36)
IP	Print control (refer to "Labeled Common Arrays")
NC	Refer to Table 10
QDOT	Refer to Table 10
QL	Limit dynamic pressure at speed-altitude profile points, psf (refer to Table 36)
S2	Longitudinal concentrated moments from external surfaces or components, in.-lb
S3	Distributed nose and body carryover lift within each shell synthesis segment, lb
S6	Refer to Tables 10 and 23
TMP	Refer to Table 10
VL	Limit mach number at speed-altitude profile points, M (refer to Table 36)
WFC	Refer to Table 10
WFUS	Refer to Table 10
XCG	Refer to Table 10
XO	Refer to Table 10

The scratch arrays S2 and S3 are calculated in subroutines FLDDT and FARLD, respectively, and are not maintained after exit from this subroutine.

Arrays and Variables Calculated

IF1	Refer to Table 10
ILC	Refer to Table 10
LCN	Refer to Table 10
LDC	Refer to Table 10

LDT	Refer to Table 10
NOC	Refer to Table 10
S(2)	Dynamic pressure for use in subroutine QCRIT, psf
S(7)	Vehicle mach number for use in subroutine QCRIT, M
S(8)	Altitude for use in subroutine QCRIT, ft
S22	Refer to Tables 10 and 22
S6	Refer to Tables 10 and 23

Labeled Common Arrays

IP(71)	Output print control for input loads, inertia, and speed-altitude profile data
IP(74)	Output print control for net ultimate loads array

Mass Storage File Records

Read by Subroutine
Records 33 and 34

Written by Subroutine
Records 61-84

Error Messages

None

TABLE 32. LOAD AND INERTIA DATA COMBINATIONS WHEN COMPONENT AIRLOADS ARE INPUT

Condition No.	Array Locations		Vehicle Weight	Wing Position
	FUS	FUSDWI		
1	1-28	1-90	BFDW	Aft
2	29-56	1-90	BFDW	Aft
3	57-84	1-90	BFDW	Aft
4	85-112	1-90	BFDW	Aft
5	113-140	91-180	BFDW	Fwd
6	141-168	1-90	BFDW	Aft
7	169-196	91-180	BFDW	Fwd
8	197-224	181-270	MDW	Fwd
9	225-252	271-360	LDW	Fwd
10	253-280	1-90	BFDW	Aft
11	281-308	1-90	BFDW	Aft
12	309-336	91-180	BFDW	Fwd
13	337-364	91-180	BFDW	Fwd
14	365-392	1-90	BFDW	Aft
15	393-420	1-90	BFDW	Aft
16	421-448	91-180	BFDW	Fwd
17	449-476	91-180	BFDW	Fwd
18	477-504	1-90	BFDW	Aft
19	505-532	1-90	BFDW	Aft
20	533-560	1-90	BFDW	Aft
21	561-588	1-90	BFDW	Aft
22	589-616	1-90	BFDW	Aft
23	617-644	1-90	BFDW	Aft
24	645-672	361-450	MDW	Fwd

BFDW = Basic flight design weight
MDW = Maximum design weight
LDW = Landing design weight

For fixed-wing aircraft, the wing position is irrelevant.

TABLE 33. FUS ARRAY ARRANGEMENT INPUT COMPONENT LOADS

Location	Description
1	Load condition input data indicator (LDT): • 0.0 or blank if condition is not investigated • 2.0 if condition is to be evaluated and locations • 2 through 28 are defined
2	Load condition type indicator (LDC) 1.0 - balanced flight with flaps up 2.0 - balanced flight with flaps down 3.0 - two-wheeled landing 4.0 - vertical gust 5.0 - lateral gust 6.0 - pitching acceleration 7.0 - yawing acceleration 8.0 - taxi
3-4	Not used
5	Temperature, ^{o}F
6	Factor to convert limit load to ultimate load
7	Vertical load factor
8	Not used
9	Wing leading edge apex at centerline of fuselage, in.
10	Pitching acceleration, radians/sec
11	Not used
12	Vehicle sink speed, ft/sec
13	Landing gear stroke, in.
14	Vehicle velocity, M
15	Altitude, ft
16	Forebody limit lift, lb

TABLE 33. FUS ARRAY ARRANGEMENT INPUT COMPONENT LOADS (CONT)

Location	Description
17	Center of pressure of forebody lift - longitudinal station, in.
18	Wing carryover limit lift, lb
19	Center of pressure of carryover lift - longitudinal station, in.
20	Wing outer panel limit lift, lb
21	Center of pressure of wing lift - longitudinal station, in.
22	Center of pressure of wing lift - lateral station, in.
23	Horizontal tail limit lift, lb
24	Center of pressure of horizontal tail lift - longitudinal station, in.
25	Center of pressure of horizontal tail lift - lateral station, in.
26	Vertical tail limit lift, lb
27	Center of pressure of vertical tail lift - longitudinal station, in.
28	Center of pressure of vertical tail lift - lateral station, in.
29-56	Load data for condition 2. Data are organized in the same sequence as noted for locations 1 through 28
57-84	Load data for condition 3
85-112	Load data for condition 4
113-140	Load data for condition 5
141-188	Load data for condition 6
169-196	Load data for condition 7

TABLE 33. FUS ARRAY ARRANGEMENT INPUT COMPONENT LOADS (CONCL)

Location	Description
197-224	Load data for condition 8
225-252	Load data for condition 9
253-280	Load data for condition 10
281-308	Load data for condition 11
309-336	Load data for condition 12
337-364	Load data for condition 13
365-392	Load data for condition 14
393-420	Load data for condition 15
421-448	Load data for condition 16
449-476	Load data for condition 17
477-504	Load data for condition 18
505-532	Load data for condition 19
533-560	Load data for condition 20
561-588	Load data for condition 21
589-616	Load data for condition 22
617-644	Load data for condition 23
645-672	Load data for condition 24

TABLE 34. FUS ARRAY ARRANGEMENT INPUT NET LOADS[a]

Location	Description
1	Load condition input data indicator (LDT) • 1.0 indicates input net loads in the locations that follow
2-4	Not used
5	Temperature, ^{o}F
6	Factor to convert limit load to ultimate load
7	Vertical load factor
8	Vehicle center of gravity - longitudinal station, in.
9	Not used
10	Pitching acceleration, radians/sec
11-13	Not used
14	Vehicle velocity, M
15	Altitude
16-30	Not used
31-50	Net limit vertical moment at synthesis cuts, in.-lb
51-70	Net limit cross-ship moment couple in synthesis segment from external component, in.-lb
71-90	Net limit vertical shear at synthesis cuts, lb
91	Load condition input data indicator (LDT): • 0.0 or blank indicates no loads data in the locations that follow • 1.0 indicates input net loads for load condition number 2

[a]Input net loads option currently inactive in SWEEP

TABLE 34. FUS ARRAY ARRANGEMENT INPUT NET LOADS (CONCL)

Location	Description
92-180	Load data for condition 2. Data are organized in the same sequence as noted for locations 2 through 90
181-270	Load data for condition 3
271-360	Load data for condition 4
361-450	Load data for condition 5
451-540	Load data for condition 6
541-630	Load data for condition 7
631-672	Not used

TABLE 35. FUSDWI ARRAY ARRANGEMENT

Location	Description
1-90	Weight and inertia data at basic flight design weight for wings aft or for fixed wings
1	Vehicle weight, lb
2	Vehicle center of gravity - station x, in.
3	Not used
4	Vehicle center of gravity - water line z, in.
5	Not used
6	Vehicle pitch inertia, lb-in.^{2}
7	Not used
8	Weight of wing and contents, lb
9	Wing center of gravity - station x, in.
10	Wing center of gravity - butt line y, in.
11	Wing center of gravity - water line z, in.
12	Not used
13	Wing pitch inertia, lb-in.^{2}
14	Not used
15	Weight of horizontal tail and contents, lb
16	Horizontal tail center of gravity - station x, in.
17	Horizontal tail center of gravity - butt line y, in.
18	Horizontal tail center of gravity - water line z, in.
19	Not used
20	Horizontal tail pitch inertia, lb-in.^{2}

TABLE 35. FUSDWI ARRAY ARRANGEMENT (CONT)

Location	Description
21	Not used
22	Weight of vertical tail and contents, lb
23	Vertical tail center of gravity - station x, in.
24	Vertical tail center of gravity - butt line y, in.
25	Vertical tail center of gravity - water line z, in.
26	Not used
27	Vertical tail pitch inertia, lb-in.^{2}
28	Not used
29	Weight of nacelle and contents, lb
30	Nacelle center of gravity - station x, in.
31	Nacelle center of gravity - butt line y, in.
32	Nacelle center of gravity - water line z, in.
33	Not used
34	Nacelle pitch inertia, lb-in.^{2}
35	Not used
36	Weight of store or other component, lb
37	Store center of gravity - station x, in.
38	Store center of gravity - butt line y, in.
39	Store center of gravity - water line z, in.
40	Not used
41	Store pitch inertia, lb-in.^{2}

TABLE 35. FUSDWI ARRAY ARRANGEMENT (CONCL)

Location	Description
42-50	Not used
51-70	Weight of fuselage contents distributed in synthesis segments, lb
71-90	Weight of fuselage distributed in synthesis segments, lb
91-180	Weight and inertia data at basic flight design weight for wings forward. Data are organized in same sequence as noted for locations 1 through 90.
181-270	Weight and inertia data at maximum design weight for wings forward.
271-360	Weight and inertia data at landing design weight for wings forward
361-450	Weight and inertia data at maximum design weight for wings forward
451-460	HGT(1)-HGT(10), altitude on speed-altitude profile, ft
461-470	VL(1)-VL(10), mach numbers on speed-altitude profile, M
471-480	QL(1)-QL(10), dynamic pressures on speed-altitude profile, psf

SUBROUTINE FRMEG

General Description

Deck name: FRMEG
Entry name: FRMEG
Called by: FUSLD
Subroutines called: None

This subroutine locates the major support frames for the external surfaces, landing gear, nacelles, and one other component that might be supported by the fuselage. A maximum of 15 frames may be defined and are organized in blocks of 15 data locations as follows:

Relative Array Location	External Support Frame
1	Nose landing gear trunnion frame
2	Nose landing gear drag strut frame
3	Main landing gear trunnion frame
4	Main landing gear drag strut frame
5	Wing front spar frame
6	Wing intermediate spar frame
7	Wing rear spar frame
8	Horizontal tail front spar frame
9	Horizontal tail rear spar or spindle frame
10	Vertical tail front spar frame
11	Vertical tail rear spar or spindle frame
12	Nacelle forward support frame
13	Nacelle aft support frame
14	Other component forward support frame
15	Other component aft support frame

The frame stations, the synthesis segments in which they occur, and the angular location of the reaction points are calculated and stored in the S6 array. For single vertical tail aircraft, the y-coordinates of the reaction points are assumed to be equal to half the tail root chord thickness.

Compatibility between the fuselage mold line coordinates at the frame stations and the input definition of the reaction point coordinates is maintained by calculating the actual deviations. The shell mold line coordinates (EY, EZ) and the actual deviations (TY, TZ) are calculated in parallel arrays.

Arrays and Variables Used

CRV	Refer to Table 10
D	Refer to Tables 10 and 12
DOO	Refer to Table 10
RO	Refer to Table 10
TOC	Refer to Table 10
WO	Refer to Table 10
XHFS	Refer to Table 10
XHRS	Refer to Table 10
XMGD	Refer to Table 10
XMGT	Refer to Table 10
XNFS	Refer to Table 10
XNGD	Refer to Table 10
XNGT	Refer to Table 10
XNRS	Refer to Table 10
XO	Refer to Table 10
XOFS	Refer to Table 10
XORS	Refer to Table 10
XVFS	Refer to Table 10
XVRS	Refer to Table 10
XWFS	Refer to Table 10
XWIS	Refer to Table 10
XWRS	Refer to Table 10
YHSF	Refer to Table 10
YMGS	Refer to Table 10
YNGS	Refer to Table 10
YNSF	Refer to Table 10
YOSF	Refer to Table 10
YVSF	Refer to Table 10
YWSF	Refer to Table 10
ZHSF	Refer to Table 10
ZMGS	Refer to Table 10
ZNGS	Refer to Table 10
ZNSF	Refer to Table 10
ZO	Refer to Table 10
ZOSF	Refer to Table 10
ZVSF	Refer to Table 10
ZWSF	Refer to Table 10

Arrays and Variables Calculated

EY	Refer to Table 10
EZ	Refer to Table 10
S(1)	Z-distance to fuselage half-depth, in.

S(2)	One-half of vertical flat distance at side of fuselage, in.
S(3)	One-half of horizontal flat distance at top and bottom of fuselage, in.
S(4)	Fuselage corner radius, in.
S(5)	Geometry interpolation factor
S(6)	Vertical distance from fuselage half-depth to fuselage-component interface, in.
S(7)	Radial distance to fuselage-component interface, in.
S(8)	Cosine of angle from Y-axis to fuselage-component interface
S(9)	Fuselage half width at frame station, in.
S(10)	Fuselage half depth at frame station, in.
S(11)	Angle (ϕ) from vertical to fuselage-component tie point, radians (refer to "Major Frame Coordinates" methodology)
S(12)	Cosine of angle (ϕ) from Y-axis to fuselage-component tie point
S(13)	Radial distance to upper tangent point, in.
S(14)	Radial distance to side tangent point, in.
S(17)	Intermediate calculation
S(18)	Angle (ϵ), radians (refer to "Major Frame Coordinates" methodology)
S(19)	Angle (θ) from Z-axis to corner radius center of curvature, radians
S(20)	Sine of angle δ (refer to "Major Frame Coordinates" methodology)
S1(1)	YNGS, refer to Table 10
S1(2)	YNGS, refer to Table 10
S1(3)	YMGS, refer to Table 10
S1(4)	YMGS, refer to Table 10
S1(5)	YWSF, refer to Table 10
S1(6)	YWSF, refer to Table 10
S1(7)	YWSF, refer to Table 10
S1(8)	YHSF, refer to Table 10
S1(9)	YHSF, refer to Table 10
S1(10)	Y-coordinate of vertical tail fuselage interface (one-half of tail root thickness for single vertical tail), in.
S1(11)	Y-coordinate of vertical tail fuselage interface (one-half of tail root thickness for single vertical tail), in.
S1(12)	YNSF, refer to Table 10
S1(13)	YNSF, refer to Table 10

S1(14)	YOSF, refer to Table 10
S1(15)	YOSF, refer to Table 10
S2(1)	ZNGS, refer to Table 10
S2(2)	ZNGS, refer to Table 10
S2(3)	ZMGS, refer to Table 10
S2(4)	ZMGS, refer to Table 10
S2(5)	ZWSF, refer to Table 10
S2(6)	ZWSF, refer to Table 10
S2(7)	ZWSF, refer to Table 10
S2(8)	ZHSF, refer to Table 10
S2(9)	ZHSF, refer to Table 10
S2(10)	ZVSF, refer to Table 10
S2(11)	ZVSF, refer to Table 10
S2(12)	ZNSF, refer to Table 10
S2(13)	ZNSF, refer to Table 10
S2(14)	ZOSF, refer to Table 10
S2(15)	ZOSF, refer to Table 10
S6	Refer to Tables 10 and 23
TY	Refer to Table 10
TZ	Refer to Table 10

Labeled Common Arrays

None

Mass Storage File Records

None

Error Messages

None

SUBROUTINE FLDIN[a]

General Description

Deck name:	FLDIN
Entry name:	FLDIN
Called by:	FUSLD
Subroutines called:	None

[a]This subroutine is currently inactive in the SWEEP program.

This subroutine processes input net limit vertical shears and bending moments and stores the ultimate loads in the S6 array. Since the routine cannot differentiate between net shear due to inertia, distributed body airloads, or external forces, the following scheme is used to allocate load contribution. Should an external surface or component support frame exist within a synthesis segment, the incremental shear between the forward and aft ends of the segment is attributed to the frame. This shear is distributed equally between the two (left and right sides) frame points. Should two or more support frames exist within a synthesis segment, the first frame in the array is assumed to react the loads, and the subsequent frames are deleted from the analysis. Should no major frame exist within the segment, the incremental shear is attributed to fuselage and content inertia.

Arrays and Variables Used

BHIX	Refer to Table 10
BHIY	Refer to Table 10
D	Refer to Tables 10 and 12
FAC1	Refer to Table 10
NC	Refer to Table 10
VIZ	Refer to Table 10

Arrays and Variables Calculated

S1	Cross-ship moments at synthesis cuts, in.-lb
S2	Intermediate calculations
S3	Intermediate calculations
S6	Refer to Tables 10 and 23

Labeled Common Arrays

None

Mass Storage File Records

None

Error Messages

None

SUBROUTINE FLDDT

General Description

Deck name: FLDDT
Entry name: FLDDT
Called by: FUSLD
Subroutines called: FARLD, FLDNT

This subroutine distributes the external surface and component loads at their respective support frames. The distribution of loads is based on the type of load condition, the location of components, and the type of support requirements. The routine is programmed to identify the load condition types (LDC) which are as follows:

LDC	Load Condition Type
1	Balanced flight with flaps up
2	Balanced flight with flaps down
3	Two-wheeled landing
4	Vertical gust
5	Lateral gust
6	Pitching acceleration
7	Yawing acceleration
8	Taxi

Nose gear loads exist for the taxi condition. The tire reaction is determined by static vehicle balance. A trunnion frame (XNGT) and a drag link frame (XNGD) may exist. Should there be no drag link frame, any unbalanced pitch moment due to the relative longitudinal position of the tire with respect to the frame is introduced at the trunnion frame.

Main gear loads exist for the taxi and two-wheeled landing conditions. For the landing condition, all of the unbalanced vertical force is reacted at the main gear tires. The absence of a main gear trunnion frame (XMGT) designates the location of the landing gear on the wing, and the gear loads are saved for use in the wing reaction calculations. The tire y-offset relative to the trunnion support point results in a cross-ship moment on the trunnion frame. Should there be no drag link frame (XMGD), any unbalanced pitch moment is also introduced at the trunnion frame.

The wing loads may be reacted by supports at three points (XWFS, XWIS, XWRS) or by a two-point support system (XWFS, XWRS). Vertical shear at each of the support frames is always calculated. If the carry-through indicator WCT is 1, cross-ship moment is also calculated.

The horizontal tail is supported by two fuselage frames (XHFS, XHRS). The absence of a front spar frame (XHFS) indicates the location of the horizontal on the vertical tail, and the loads are saved for use in the vertical tail reaction calculations. Three different arrangements may be specified for the horizontal tail support (HCT). If HCT is 0, the tail center section provides the cross-ship moment continuity. If HCT is 1, the cross-ship moment is reacted by the two support frames. If HCT is 2, the rear spar frame (XHRS) reacts the moment, and the front spar frame (XHFS) reacts the vertical load from the actuator.

The vertical tail is supported by two fuselage frames (XVFS, XVRS). The significance of the vertical tail support indicator (VCT) is identical to that for the horizontal tail.

Nacelle and any other component are supported at two points which react both vertical loads and cross-ship moments.

Arrays and Variables Used

AIOY	Refer to Table 10
AIWT	Refer to Table 10
D	Refer to Tables 10 and 12
DGW	Refer to Table 10
FAC1	Refer to Table 10
FNZO	Refer to Table 10
HCT	Refer to Table 10
HIOY	Refer to Table 10
HWT	Refer to Table 10
LDC	Refer to Table 10
NC	Refer to Table 10
PYV	Refer to Table 10
PZBW	Refer to Table 10
PZH	Refer to Table 10
PZN	Refer to Table 10
PZWB	Refer to Table 10
QIOY	Refer to Table 10
SIOY	Refer to Table 10
SSPD	Refer to Table 10
STKE	Refer to Table 10
STWT	Refer to Table 10
TIYY	Refer to Table 10
TY	Refer to Table 10
TZ	Refer to Table 10
VCT	Refer to Table 10
VIOY	Refer to Table 10
VWT	Refer to Table 10
WCT	Refer to Table 10

WIOY	Refer to Table 10
WWT	Refer to Table 10
XACG	Refer to Table 10
XCG	Refer to Table 10
XCPB	Refer to Table 10
XCPH	Refer to Table 10
XCPN	Refer to Table 10
XCPV	Refer to Table 10
XCPW	Refer to Table 10
XHCG	Refer to Table 10
XHFS	Refer to Table 10
XHRS	Refer to Table 10
XMGD	Refer to Table 10
XMGG	Refer to Table 10
XMGT	Refer to Table 10
XNFS	Refer to Table 10
XNGD	Refer to Table 10
XNGG	Refer to Table 10
XNGT	Refer to Table 10
XNRS	Refer to Table 10
XOFS	Refer to Table 10
XORS	Refer to Table 10
XST	Refer to Table 10
XVCG	Refer to Table 10
XVFS	Refer to Table 10
XVRS	Refer to Table 10
XWCG	Refer to Table 10
XWFS	Refer to Table 10
XWIS	Refer to Table 10
XWRS	Refer to Table 10
YACG	Refer to Table 10
YCPH	Refer to Table 10
YCPW	Refer to Table 10
YHCG	Refer to Table 10
YHSF	Refer to Table 10
YMGG	Refer to Table 10
YMGS	Refer to Table 10
YNSF	Refer to Table 10
YOSF	Refer to Table 10
YST	Refer to Table 10
YVSF	Refer to Table 10
YWCG	Refer to Table 10
YWSF	Refer to Table 10
ZACG	Refer to Table 10
ZCG	Refer to Table 10

ZCPV	Refer to Table 10
ZHCG	Refer to Table 10
ZST	Refer to Table 10
ZVCG	Refer to Table 10
ZVSF	Refer to Table 10
ZWCG	Refer to Table 10

Arrays and Variables Calculated

FNZO	Refer to Table 10
QDOT	Refer to Table 10
S	Intermediate calculations for individual component loads and as follows:
S(21)	Horizontal tail inertia load for vertical tail load calculation, lb
S(22)	Horizontal tail center of gravity for vertical tail load calculation, in.
S(23)	Horizontal tail airload for vertical tail load calculation, lb
S(24)	Horizontal tail airload center of pressure for vertical tail load calculation, in.
S(25)	Horizontal tail pitching moment for vertical tail load calculation, in.-lb
S(29)	Main landing gear load for wing load calculation, lb
S(30)	X-coordinate of main landing gear load, in.
S(31)	Y-coordinate of main landing gear load, in.
STKE	Refer to Table 10
S2	Pitching moment introduced at frame for use in subroutine FLDNT, in.-lb
S3	Distributed body airload array cleared to zero for taxi condition, lb
S6	Refer to Tables 10 and 23

Labeled Common Arrays

None

Mass Storage File Records

None

Error Messages

- ERROR MESSAGE AIR VEHICLE DOES NOT BALANCE FOR TAXI
  VEHICLE CG = XXX.X X - NG = YYY.Y X - MG = ZZZ.Z

  The foregoing message appears when the vehicle center of gravity (XXX.X) is not between the nose gear tire location (YYY.Y) and the main gear tire location (ZZZ.Z). The vehicle is out of balance and will not sit on the runway. The component weight distributions, vehicle center of gravity, and gear locations should be checked for errors. The routine continues through the calculations with negative gear loads.

- TWO WHEELED LANDING - SINK SPEED IS 0.0

The foregoing message appears when the sink speed was not input for the two-wheeled landing condition. The condition reverts to a balanced flight condition.

- PROGRAM OVERRIDE
  STROKE WAS 0.0 IS 18.0 INCHES

The foregoing message appears when the main landing gear stroke was not input for the two-wheeled landing condition. The routine assumes an 18-inch stroke in order to circumvent a division by zero.

SUBROUTINE DUMMY1

General Description

Deck name: DUMMY1
Entry name: DUMMY1
Called by: FUSLD
Subroutines called: None

This subroutine checks the input loads and geometry data arrays for possible incompatibility. The total vehicle weight, balance, and pitch inertia are redefined by the summation of all the components. For vertical balanced flight conditions, the wing load and center of pressure are adjusted to insure a balanced vehicle. Pitching acceleration and wing load are adjusted for dynamic balance conditions. If the data have been input properly, the calculations within this routine will not alter the input data.

Arrays and Variables Used

AIOY	Refer to Table 10
AIWT	Refer to Table 10
D	Refer to Tables 10 and 12
DGW	Refer to Table 10
FNZO	Refer to Table 10
HIOY	Refer to Table 10
HWT	Refer to Table 10
IP	Print control (refer to "Labeled Common Arrays")
LCN	Refer to Table 10
LDC	Refer to Table 10
NC	Refer to Table 10
PZBW	Refer to Table 10
PZH	Refer to Table 10
PZN	Refer to Table 10
PZWB	Refer to Table 10
QDOT	Refer to Table 10
SIOY	Refer to Table 10
STWT	Refer to Table 10
TIYY	Refer to Table 10
UIY	Refer to Table 10
VIOY	Refer to Table 10
VWT	Refer to Table 10
WFC	Refer to Table 10
WFUS	Refer to Table 10
WIOY	Refer to Table 10
WWT	Refer to Table 10
XACG	Refer to Table 10
XBAR	Refer to Table 10
XCG	Refer to Table 10
XCPB	Refer to Table 10
XCPH	Refer to Table 10
XCPN	Refer to Table 10
XCPW	Refer to Table 10
XHCG	Refer to Table 10
XST	Refer to Table 10
XVCG	Refer to Table 10
XWCG	Refer to Table 10
ZACG	Refer to Table 10
ZCG	Refer to Table 10
ZHCG	Refer to Table 10
ZO	Refer to Table 10
ZST	Refer to Table 10
ZVCG	Refer to Table 10
ZWCG	Refer to Table 10

Arrays and Variables Calculated

DGW	Refer to Table 10
PZWB	Refer to Table 10
QDOT	Refer to Table 10
S	Intermediate calculations
TIYY	Refer to Table 10
XCG	Refer to Table 10
XCPW	Refer to Table 10
ZCG	Refer to Table 10

Labeled Common Arrays

IP(74)	Output print control for input and corrected DGW, PZWB, QDOT, TIYY, XCG, XCPW, and ZCG values.

Mass Storage File Records

None

Error Messages

None

SUBROUTINE FARLD

General Description

Deck name: FARLD
Entry name: FARLD
Called by: FLDNT
Subroutines called: None

This subroutine distributes nose airload (PZN) and body carryover lift in the presence of the wing (PZBW) by using the basic isosceles triangle type of load distributions. The basic distribution is used to calculate the amount of lift acting on each of the affected fuselage segments. However, the assumption that the lift in each segment acts at the centroid of the segment (XBAR) introduces an error in the total center of pressure location. A coupled distribution is added to the basic distribution to obtain the correct lift and center of pressure.

The forward end of the nose lift distribution is at the fuselage nose station. The apex of the triangle is at the center of pressure, and the aft end is located to form an isosceles triangle. Checks are made to confine the

distribution between the nose and tail stations, and to distribute the lift within a minimum of two fuselage segments.

The body carryover lift is distributed in the same manner as the nose lift. The forward edge of the lift distribution is located at the synthesis cut, which is either at the wing leading edge apex or, if a cut does not exist at that point, at the cut immediately forward of the wing apex.

Arrays and Variables Used

D	Refer to Tables 10 and 12
FELX	Refer to Tables 10
NC	Refer to Table 10
PZBW	Refer to Table 10
PZN	Refer to Table 10
XAPX	Refer to Table 10
XBAR	Refer to Table 10
XCPB	Refer to Table 10
XCPN	Refer to Table 10
XI	Refer to Table 10
XO	Refer to Table 10

Arrays and Variable Calculated

S(1)	Forward end of lift distribution, in.
S(2)	Intermediate calculation
S(3)	Aft end of lift distribution, in.
S(4)	Intermediate calculation
S(5)	Intermediate calculation
S(6)	Intermediate calculation
S(7)	Intermediate calculation
S(12)	Value of distributed load at peak of basic triangular distribution, lb/in. (refer to methodology discussion of body airloads)
S(13)	Value of distributed load for add distribution, lb/in. (refer to methodology discussion of body airloads)
S(14)	Apex of triangular lift distribution, in.
S(15)	Lift to be distributed, lb
S(16)	Center of pressure of lift, in.
S1	Basic triangular-shape lift distribution, in.; S1(J) is ratio of total basic lift (lb) acting on fuselage segment J to peak value of triangularly distributed basic load (lb/in.)
S21(1)	X-coordinate of wing leading edge apex station, in.

S3	Body airload acting on individual synthesis segments for use in subroutine FLDNT, lb
S4	Coupled lift distribution, in.; S4(J) is ratio of total add distribution lift (lb) acting on segment J to distributed value of that lift (lb/in.)

Labeled Common Arrays

None

Mass Storage File Records

None

Error Messages

None

SUBROUTINE FLDNT

General Description

Deck name: FLDNT
Entry name: FLDNT
Called by: FLDDT
Subroutines called: None

This subroutine integrates the effects of fuselage deadweight distribution, airloads, and external forces to obtain the net ultimate vertical shear and bending moment diagrams. The routine also calculates the shear force due to the contents in each synthesis segment.

Arrays and Variables Used

D	Refer to Tables 10 and 12
DELX	Refer to Table 10
FAC1	Refer to Table 10
FNZO	Refer to Table 10
NC	Refer to Table 10
QDOT	Refer to Table 10
S2	Pitching moment introduced at major frames calculated in subroutine FLDDT, in.-lb

S3	Body airload acting on individual synthesis segments calculated in subroutine FARLD, lb
S6	Refer to Tables 10 and 23
WIY	Refer to Table 10
WFC	Refer to Table 10
WFUS	Refer to Table 10
XBAR	Refer to Table 10
XCG	Refer to Table 10
XO	Refer to Table 10
ZCG	Refer to Table 10
ZO	Refer to Table 10

Arrays and Variables Calculated

S1	Ultimate vertical load factor at each synthesis segment
S4	Vertical shear in synthesis segment introduced at support frames, lb
S5	Moment couple transfer term resulting from difference between segment centroid and support frame station, in.-lb
S6	Refer to Tables 10 and 23

Labeled Common Arrays

None

Mass Storage File Records

None

Error Messages

None

SUBROUTINE MFCNTL

General Description

Deck name: MFCNTL
Entry name: MFCNTL
Called by: FUSLD
Subroutines called: MATLF, MATLP1

This subroutine controls the development of material property data for the cover, longerons, major frames, and minor frames. This routine reads the material library data from mass storage file records 41 through 60, calls subroutine MATLF to calculate the material properties, and then stores these data on mass storage file records 85 through 108. The input material selection number determines the library file to be used for each of the shell components. For a given load condition (LCN), the material properties for the shell elements are calculated and written into the mass storage file.

Arrays and Variables Used

CIND	Refer to Tables 10 and 11
IP	Print control (refer to "Labeled Common Arrays")
LCN	Refer to Table 10
S6	Refer to Tables 10 and 23
TM	Refer to Tables 10 and 24
TMD	Refer to Table 10 and 25
XMISC	Refer to "Labeled Common Arrays"

Arrays and Variables Calculated

MATLI	Refer to Table 10
NMATL	Refer to Table 10
TMS	Refer to Tables 10 and 26
TT	Refer to Table 10 and 28

Labeled Common Arrays

IP(72)	Output print control for material property data at first load condition; subroutine MATLP1 is called to print data
IP(73)	Output print control for material property data at all design load conditions
XMISC(1)	Number of different materials which exist in material library files

Mass Storage File Records

Read by Subroutine
Records 41-60

Written by Subroutine
Records 85-108

Error Messages

- MATL INPUT ERROR. ASSUMED MATL NO. 1
  III XXX YYY

The foregoing message appears when the input material number is not within the limits of the material library. The total number of materials on file (III), the material number requested (XXX), and the design temperature (XYY) appear below the printed message. If the program assumption is unacceptable, the input data should be corrected.

- MATL TEMPERATURE ERROR MATL NO. XXX.X REQD YYY.Y DEG. ASSUMED
  TEMP = ZZZ.Z DEG

The foregoing message appears when the design temperature (YYY.Y) is less than or equal to zero. The program assumes the lowest temperature on file (ZZZ.Z) and proceeds. If the design temperature is as indicated, and the material properties at that temperature are required, the material library data should be changed to include properties at the design temperature.

SUBROUTINE MATLF

General Description

Deck name: MATLF
Entry name: MATLF
Called by: MFCNTL
Subroutines called: None

This subroutine interpolates the material file data for properties at the design temperature, and converts the tabulated stress-strain data into an approximation equation based on least squares fit. The curves through points 1, 2, 5 or 1, 3, 5 or 1, 4, 5 of the tabulated data are examined for the best fit.

Arrays and Variables Used

D	Refer to Tables 10 and 12
TMD	Refer to Tables 10 and 25
TT	Refer to Tables 10 and 28

Arrays and Variables Calculated

KA	Lower temperature data indicator for material property interpolation
KB	Upper temperature data indicator for material property interpolation
TM	Refer to Tables 10 and 24
TT	Refer to Tables 10 and 28

Labeled Common Arrays

None

Mass Storage File Records

None

Error Messages

- *** MATL TEMPERATURE ERROR *** MATL NO. XXX.X THERE IS ONE TEMPERATURE ON FILE REQD TEMP = YYY.Y ASSUMED TEMP = ZZZ.Z

The foregoing message is printed when the file consists of material properties at only one temperature which does not agree with the design temperature. The routines use the properties in the file. If this assumption is not acceptable, the file data should be corrected.

- *** MATL TEMPERATURE ERROR *** MATL NO. XXX.X TEMPERATURE IS BEYOND RANGE OF TABLE REQD TEMP = YYY.Y LAST TEMP = ZZZ.Z

The foregoing message is printed when the program extrapolates the material file data. This message may be followed by a catastrophic failure. In most cases, the extrapolation should provide acceptable results and no correction would be required. If the extrapolation results in failure or if the results are not satisfactory, the library data should be extended to include the design temperature.

SUBROUTINE MATLP1

General Description

Deck name: MATLP1
Entry name: MATLP1
Called by: MFCNTL
Subroutines called: None

This subroutine is called to print the material properties of the shell elements for the first load condition if IP(72) is 0, and for all load conditions if IP(73) is 0. The curve fit constants and the tabulated stress-strain data are presented in the output.

Arrays and Variables Used

LCN	Refer to Table 10
MATL	Refer to Table 10
RM	Refer to Table 10
TM	Refer to Tables 10 and 24
TMD	Refer to Tables 10 and 25

Arrays and Variables Calculated

None

Labeled Common Arrays

None

Mass Storage File Records

None

Error Messages

None

SUBROUTINE QCRIT

General Description

Deck name: QCRIT
Entry name: QCRIT
Called by: FUSLD
Subroutines called: None

This subroutine checks the vehicle flight profile data for the critical local panel flutter condition, and for maximum sea-level speed and dynamic pressure.

The critical flutter parameters may either be part of the input data set in the CIND array, determined by investigation of the different flight design conditions, or by investigation of the speed-altitude profile. The basic organization of the flight data is accomplished in subroutine FUSLD prior to entry into this routine. In any case, local panel flutter is not evaluated for subsonic flight conditions.

The routine makes a systematic check between the previously defined critical parameters and the mach number, altitude, and dynamic pressure for the point under consideration. Should mach number and altitude be defined with the dynamic pressure undefined, the routine calculates dynamic pressure by a curve fit estimate of standard-day atmospheric properties.

The cover modulus of elasticity is consistent with the vehicle environment for any specific load condition. However, during the evaluation of speed-altitude profile data, consistent material properties are not available; therefore, the modulus at the last load condition is used in the search through the vehicle limit speed envelope. This assumption does not introduce any significant error, since material modulus taken to the one-third power (Figure 15) is not expected to vary to any large degree between two adjacent points being analyzed on the mach-altitude profile.

Arrays and Variables Used

ALT	Vehicle altitude, ft
CIND	Refer to Tables 10 and 11
D	Refer to Tables 10 and 12
EQUA	Refer to Tables 10 and 13
FMN	Specific mach number for flutter evaluation, M
Q	Dynamic pressure, psf
TMS	Refer to Tables 10 and 26

Arrays and Variables Calculated

CIND	Refer to Tables 10 and 11
S(1)	Altitude divided by 1,000, ft/1,000
S(2)	Q, dynamic pressure, psf
S(3)	Function of mach number
S(4)	Cover material modulus of elasticity, psi
S(5)	Cover panel thickness function from current parameters
S(6)	Cover panel thickness function from previous or input parameters

Labeled Common Arrays

None

Mass Storage File Records

None

Error Messages

- *** PROGRAM OVERRIDE ***
  FLUTTER E = XXXXXXXX.X

The foregoing message is printed when the input mach number in the CIND array is greater than 1, and the cover modulus of elasticity was not input. The modulus from the first load condition is used as noted by the message. No corrective action is required.

- CHECK ON INPUT FLUTTER REQUIREMENT
  DATA ERROR Q IS ZERO

The foregoing message is printed when the input mach number in the CIND array is greater than 1, and the dynamic pressure was not input. The dynamic pressure is set to 1.0 in order to circumvent a division by zero. This program revision has an effect of voiding the input flutter data, but has no effect on the flutter evaluation of the load conditions or speed-altitude profile data points. If the input point is of prime concern, the dynamic pressure should be input in the data set.

SUBROUTINE FFRME

General Description

Deck name: FFRME
Entry name: FFRME
Called by: FUS01
Subroutines called: FRMND1, FRMND2, FRMLD

This subroutine controls the organization of frame load data, development of internal loads, and the synthesis of the major support frames.

Initial organization is accomplished by examination of the first load condition data. The S6 array defines a maximum of 15 external load support frames by nonzero fuselage stations. A systematic check is made for common

frame stations which designate multiple-function frames. The scratch counter arrays (I1, I2, I3) are used to determine the loads data to be combined for the frame synthesis. The procedure starts at the first frame in the array and determines the total number of unique frames (L) to be evaluated. The I1 array tracks the first unique station encountered, the I2 array tracks the second frame at that station, and the I3 array keeps track of the third frame. A maximum of three frames may have a common station. Should a fourth functional frame occur at the same station, it is evaluated as a unique frame.

All of the vehicle load conditions are examined, and the loads for the specific frame are ordered in the FFLD array. Each frame has a minimum of two node points representative of the left and right sides of the vehicle. However, the angular location of only one of the nodes is present in the S6 array, and, therefore, the complement angle is calculated and stored in the FFLD array. The coordinates of these nodes are also rearranged and saved in arrays YE and ZE.

The routine then calls subroutine FRMND1 to develop the synthesis cut coordinates, and subroutine FRMLD to calculate the internal frame loads and structural synthesis. Correlation factors are applied to the synthesized frame weights which are stored in the FMWT array.

Arrays and Variables Used

CIND	Refer to Tables 10 and 11
D	Refer to Tables 10 and 12
EY	Refer to Table 10
EZ	Refer to Table 10
FRMC	Refer to Table 10
IP	Print control (refer to "Labeled Common Arrays")
KC	Refer to Table 10
NOC	Refer to Table 10
S6	Refer to Tables 10 and 23
TWT	Refer to Table 10
WTF	Refer to Table 10
WTST	Refer to Table 10
WTW	Refer to Table 10

Arrays and Variables Calculated

FD	Frame depth, in.
FFLD	Refer to Tables 10 and 14
FMWT	Refer to Tables 10 and 16
IC	Refer to Table 10
IFF	Refer to Table 10

IQ	Refer to Table 10
I1	Specific unique support frame number
I2	Subsequent support frame number at same station as specific unique frame
I3	Third support frame number which has same station as specific unique frame
L	Total number of unique major frames
LCN	Load condition counter
LPT	Number of load points on frame
S1	Scratch array for tracking only the first frame that occurs at a given fuselage station
YE	Refer to Table 10
ZE	Refer to Table 10

Labeled Common Arrays

IP(75)	Output print control for external loads and design temperature at each unique frame
IP(77)	Output print control for detail weights of each unique major frame

Mass Storage File Records

Read by Subroutine
Records 61-84

Written by Subroutine
None

Error Messages

None

SUBROUTINE FRMND1

General Description

Deck name: FRMND1
Entry name: FRMND1
Called by: FFRME
Subroutines called: None

This subroutine calculates the frame node coordinates at the frame synthesis cuts for rounded rectangle shapes. Should the frame occur in the first shell synthesis segment, the geometric definition at the first shell synthesis cut is used for the frame. The geometry of all other frames is determined by interpolating between the bounding shell synthesis cuts. The frame synthesis cut coordinates are based on equal-length segments along the external contour of the frame. The first cut is taken at the top centerline, which also defines the coordinates of the last synthesis cut.

Arrays and Variables Used

D	Refer to Tables 10 and 12
DOO	Refer to Table 10
FFLD	Refer to Tables 10 and 14
IFF	Refer to Table 10
IP	Print control (refer to "Labeled Common Arrays")
IQ	Refer to Table 10
RO	Refer to Table 10
WO	Refer to Table 10
XO	Refer to Table 10

Arrays and Variables Calculated

DLS	Refer to Table 10
PSI	Refer to Table 10
S	Intermediate calculations
Y	Refer to Table 10
YB	Refer to Table 10
Z	Refer to Table 10
ZB	Refer to Table 10

Labeled Common Arrays

IP(75)	Output print control for frame-shape parameters

Mass Storage File Records

None

Error Messages

None

SUBROUTINE FRMND2

General Description

Deck name: FRMND2
Entry name: FRMND2
Called by: FFRME
Subroutines called: None

This subroutine is currently a dummy routine that would be written to calculate the frame coordinates for elliptical fuselage shapes.

SUBROUTINE FRMLD

General Description

Deck name: FRMLD
Entry name: FRMLD
Called by: FFRME
Subroutines called: SFOAWE

This subroutine calculates the ring neutral axis coordinates based on the mold line coordinates and the frame depth. It calculates the shear flow to statically balance the external frame loads, and then calculates the internal ring loads based on the elastic center approach.

The routine systematically examines the different frame load conditions, calculates the internal loads, and then calls subroutine SFOAWE to synthesize the frame. The load condition counter (LCN) is transferred through common to direct SFOAWE to the proper material property file. Should there be no frame loads for a given vehicle load condition, the next condition is examined. If there are no loads applied on the frame for all of the conditions, the frame is synthesized to construction minimums.

Arrays and Variables Used

D	Refer to Tables 10 and 12
DLS	Refer to Table 10
FD	Refer to Table 10
FFLD	Refer to Tables 10 and 14
IC	Refer to Table 10
IFF	Refer to Table 10
IP	Print control (refer to "Labeled Common Arrays")
IQ	Refer to Table 10
LPT	Refer to Table 10

NOC	Refer to Table 10
PSI	Refer to Table 10
Y	Refer to Table 10
YB	Refer to Table 10
YE	Refer to Table 10
Z	Refer to Table 10
ZB	Refer to Table 10
ZE	Refer to Table 10

Arrays and Variables Calculated

A	Refer to Table 10
AA	Refer to Table 10
AREA	Refer to Table 10
BEN	Refer to Table 10
BM	Refer to Table 10
BMO	Refer to Table 10
DLSP	Refer to Table 10
HO	Refer to Table 10
LCN	Refer to Table 10
Q	Refer to Table 10
S	Intermediate calculations
V	Refer to Table 10
VO	Refer to Table 10
VV	Refer to Table 10
YP	Refer to Table 10
YPB	Refer to Table 10
ZP	Refer to Table 10
ZPB	Refer to Table 10
ZZS	Refer to Table 10

Labeled Common Arrays

IP(76)	Output print control for major frame coordinates and internal loads

Mass Storage File Records

None

Error Messages

None

SUBROUTINE SFOAWE

General Description

Deck name: SFOAWE
Entry name: SFOAWE
Called by: FRMLD
Subroutines called: None

This subroutine calculates the frame component structural sizing based on the internal ring loads, material properties, and fabrication minimums. The proper material file that accompanies a load condition is defined by the load condition counter (LCN).

This subroutine is entered for each load condition. For the first condition, all of the structural elements are initialized to fabrication minimums. On subsequent conditions, the previous sizing for each synthesis segment is the lower limit in the segment analysis.

Arrays and Variables Used

AA	Refer to Table 10
BEN	Refer to Table 10
D	Refer to Tables 10 and 12
DLSP	Refer to Table 10
FD	Refer to Table 10
IFF	Refer to Table 10
IP	Print control (refer to "Labeled Common Arrays")
LCN	Refer to Table 10
NOC	Refer to Table
TMS	Refer to Tables 10 and 26
VV	Refer to Table 10

Arrays and Variables Calculated

AC	Refer to Table 10
AMI	Refer to Table 10
BB2	Refer to Table 10
BC2	Refer to Table 10
E	Refer to Table 10
FCY	Refer to Table 10
FKC	Refer to Table 10
FMU	Refer to Table 10
FSU	Refer to Table 10
FTU	Refer to Table 10

PAA	Refer to Table 10
PAX	Refer to Table 10
RHO	Refer to Table 10
S(2)	Absolute value of internal shear at frame segment, lb
S(3)	Local frame cap area required for given load condition, in.^{2}
S(34)	Intermediate calculation
S(35)	Weight of two frame caps in frame synthesis segment, lb
S(36)	Weight of frame web in frame synthesis segment, lb
S(37)	Weight of frame stiffener in frame synthesis segment, lb
S(38)	Frame cap area required for previous load conditions, in.^{2}
TCAP	Refer to Table 10
TCAP2	Refer to Table 10
TCC	Refer to Table 10
TEM2	Refer to Table 10
TW	Refer to Table 10
TWS	Refer to Table 10
TWT	Refer to Table 10
TWW	Refer to Table 10
WTF	Refer to Table 10
WTST	Refer to Table 10
WTW	Refer to Table 10

Labeled Common Arrays

IP(76)	Output print control for major frame final synthesized elements

Mass Storage File Records

Read by Subroutine
Records 85-108

Written by Subroutine
None

Error Messages

None

PROGRAM FUSO2

General Description

Deck name: FUSO2
Entry name: OVERLAY (5HALPHA, 12, 0)
Called by: OLAYOO
Subroutines called: FUSSHL

This routine is the main control for the second overlay of the fuselage weight estimation program. Subroutine FUSSHL is called to direct the shell synthesis and weight analysis. The group weight and balance summary is stored in the FDAT array for use in the total vehicle summary output.

Arrays and Variables Used

SUMM	Refer to Tables 10 and 20

Arrays and Variables Calculated

FDAT	Weight summary (refer to "Labeled Common Arrays")

Labeled Common Arrays

FDAT	Refer to Table 30

Mass Storage File Records

None

Error Messages

None

SUBROUTINE FUSSHL

General Description

Deck name: FUSSHL
Entry name: FUSSHL
Called by: FUS02
Subroutines called: CUTOUT, LDCHK, GJ1GEO, GJ2GEO, LONGS, BLKHDS, FWEIGH, PARTIT, MISCWT, SECOST, WTDIST, SUMMRY, SPRINT

This subroutine controls the shell structural synthesis, the weight and balance calculations, and the summary output.

The routine controls the synthesis calculations starting at the first cut and proceeding through the last cut. The synthesis cut counter I is transferred through common and directly affects the following subroutines:

LDCHK
GJ1GEO
GJ2GEO
LONGS
I1LONG
I2LONG
FPANEL
FHCMB
FCOVER
CVPRES
MINFR
FBEND
BLKHDS

In addition to the synthesis cut counter, certain scratch arrays are pertinent to the foregoing routines. Although these arrays are not directly referenced in this routine, they are developed in this primary synthesis loop. The maps of the S1, S2, S3, and S4 arrays as they apply to these routines are shown in Table 36.

A total of 200 T array variables are printed by subroutine FUSSHL after completion of shell sizing at each cut. Table 37 shows the output when a pressure bulkhead does not exist at a synthesis cut. Table 38 shows the variables which would be printed when a bulkhead is evaluated at a synthesis cut.

Arrays and Variables Used

BLKD	Refer to Table 10
CIND	Refer to Tables 10 and 11
D	Refer to Tables 10 and 12
IP	Print control (refer to "Labeled Common Arrays")
KC	Refer to Table 10
NC	Refer to Table 10
T	Refer to Tables 37 and 38

Arrays and Variables Calculated

FD	Refer to Table 10
SUMM	Refer to Tables 10 and 20
T	Refer to Tables 37 and 38
WTBK	Refer to Table 10

The arrays SUMM, T, and WTBK are initialized to zero in this routine.

Labeled Common Arrays

IP(79)	Output print control for first 200 cells of scratch region (common locations 2001 through 2200) after completion of synthesis at each shell cut

Mass Storage File Records

None

Error Messages

None

TABLE 36. SCRATCH ARRAYS S1, S2, S3, AND S4 AS USED IN THE SYNTHESIS LOOP

Loc	Var Name	Engrg Symbol	Description
S1(1)		b, d/D	Stringer spacing, in., or longeron height ratio
S1(2)			Number of stringers or longerons
S1(3)			Number of secondary longerons or longitudinal stiffeners
S1(4)		D	Total fuselage depth, in.
S1(5)		I/t	Upper panel vertical section inertia per unit thickness, $in.^4/in.$
S1(6)		I/t	Lower panel vertical section inertia per unit thickness, $in.^4/in.$
S1(7)		I/t	Upper panel lateral section inertia per unit thickness, $in.^4/in.$
S1(8)		I/t	Lower panel lateral section inertia per unit thickness, $in.^4/in.$
S1(9)		I/t	Side panel vertical section inertia per unit thickness, $in.^4/in.$
S1(10)		I/t	Side panel lateral section inertia per unit thickness, $in.^4/in.$
S1(11)		I/A	Upper stringers or longerons vertical section inertia per unit area, $in.^4/in.^2$
S1(12)		I/A	Lower stringers or longerons vertical section inertia per unit area, $in.^4/in.^2$
S1(13)		I/A	Upper stringers or longerons lateral section inertia per unit area, $in.^4/in.^2$

TABLE 36. SCRATCH ARRAYS S1, S2, S3, AND S4 AS USED IN THE SYNTHESIS LOOP (CONT)

Loc	Var Name	Engrg Symbol	Description
S1(14)		I/A	Lower stringers or longerons lateral section inertia per unit area, $in.^4/in.^2$
S1(15)		I/A	Side stringers vertical section inertia per unit area, $in.^4/in.^2$
S1(16)		I/A	Side stringers lateral section inertia per unit area, $in.^4/in.^2$
S1(17)		I/A	Secondary longerons vertical section inertia per unit area, $in.^4/in.^2$
S1(18)		I/A	Secondary longerons lateral section inertia per unit area, $in.^4/in.^2$
S1(19)		Q/A	Primary longerons or stringers vertical area moment per unit area, $in.^3/in.^2$
S1(20)		Q/A	Primary longerons or stringers lateral area moment per unit area, $in.^3/in.^2$
S2(1)		M	Maximum down-bending moment based on moment over longeron compression yield strength, in.-lb
S2(2)		M	Maximum up-bending moment based on moment over longeron compression yield strength, in.-lb
S2(3)		V	Maximum shear based on shear over cover ultimate shear strength, lb
S2(4)			Maximum down force due to contents in segment forward of synthesis cut, lb
S2(5)			Maximum up force due to contents in segment force of synthesis cut, lb

TABLE 36. SCRATCH ARRAYS S1, S2, S3, AND S4 AS USED IN THE SYNTHESIS LOOP (CONT)

Loc	Var Name	Engrg Symbol	Description
S2(6)	LCN		Load condition number that causes maximum down force
S2(7)	XCG		Vehicle center of gravity to go with maximum down force, in.
S2(8)	FAC1		Limit to ultimate load factor to go with maximum down force
S2(9)	FNZO	N_Z	Vertical load factor to go with maximum down force
S2(10)	QDOT		Pitching acceleration to go with maximum down force, radians/sec^2
S2(11)	LCN		Load condition number that causes maximum up force
S2(12)	XCG		Vehicle center of gravity to go with maximum up force, in.
S2(13)	FAC1		Limit to ultimate load factor to go with maximum up force
S2(14)	FNZO	N_Z	Vertical load factor to go with maximum up force
S2(15)	QDOT		Pitching acceleration to go with maximum up force, radians/sec^2
S2(16)		V	Maximum vertical shear introduced by wing, lb
S2(17)		V	Maximum vertical shear introduced by horizontal tail, lb
S2(18)		M	Maximum roll moment introduced by vertical tail, in.-lb

TABLE 36. SCRATCH ARRAYS S1, S2, S3, AND S4 AS USED IN THE SYNTHESIS LOOP (CONT)

Loc	Var Name	Engrg Symbol	Description
S2(19)		V	Maximum vertical shear introduced by nacelle, lb
S2(20)		V	Maximum vertical shear introduced by store or other component, lb
S3(1)		q	Vertical shear flow, lb/in.
S3(2)		$1 - \mu^2$	1 minus Poisson's ratio squared
S3(3)		$(1 - \mu^2)^{1/2}$	Square root of 1 minus Poisson's ratio squared
S3(4)		$K_S \pi^2 E/b^2$	Shear resistant thickness function, lb
S3(5)		F_S	Shear stress, psi
S3(6)		F_{SCR}	Critical buckling shear stress, psi
S3(7)		K_S	Shear buckling coefficient
S3(8)		b	Shear panel minimum span, in.
S3(9)		b	Shear panel vertical distance between supports, in.
S3(10)		t	Basic flutter thickness, in.
S3(11)		t	Basic acoustic fatigue thickness, in.
S3(12)		t	Upper panel land thickness for pressure design, in.

TABLE 36. SCRATCH ARRAYS S1, S2, S3, AND S4 AS USED IN THE SYNTHESIS LOOP (CONCL)

Loc	Var Name	Engrg Symbol	Description
S3(13)		t	Side panel land thickness for pressure design, in.
S3(14)		t	Lower panel land thickness for pressure design, in.
S3(15)		t	Upper panel field thickness for pressure design, in.
S3(16)		t	Side panel field thickness for pressure design, in.
S3(17)		t	Lower panel field thickness for pressure design, in.
S3(18)		t	Acoustic fatigue field thickness, in.
S3(19)		t	Upper panel thickness for flutter design, in.
S3(20)		t	Lower panel thickness for flutter design, in.
S4(1)	FD		Minor frame depth, in.
S4(2)		A	Minor frame effective area, in.^{2}
S4(3)		α	Principal diagonal tension angle, radians
S4(4)		K	Degree to which diagonal tension is developed
S4(5)		$f_{ST_{max}}$	Maximum forced crippling stress in longitudinal members, psi
S4(6)		P_{max}	Maximum forced crippling load in longitudinal members, lb
S4(7)		A	Area of longitudinal member that resist forced crippling, in.^{2}

TABLE 37. T ARRAY VARIABLES PRINTED BY SUBROUTINE FUSSHL

Loc	Variable Name	Engrg Symbol	Description	Source	
				Routine	Note
1	S(1)				1, 2
2	S(2)	A_U	Area of upper longerons or stringers to satisfy strength, in.^{2}	FBEND	
3	S(3)	A_S	Area of side stringers to resist forced crippling, in.^{2}	FBEND	2
4	S(4)	A_L	Area of lower longerons or stringers to satisfy strength, in.^{2}	FBEND	2
5	S(5)	A_{SL}	Secondary longeron area (minimum area), in.^{2}	FBEND	2
6	S(6)	σ_{max_C}	Maximum cover stress, psi	FBEND	2
7	S(7)	d/2	Distance from neutral axis to shell extreme fibre, in.	FBEND	2
8	S(8)	$\sigma_{max_L}/d/2)$	Ratio of maximum longeron stress to distance to extreme fibre, psi/in.	FBEND	2
9	S(9)	$\sigma_{max_C}/d/2)$	Ratio of maximum cover stress to distance to extreme fibre, psi/in.	FBEND	
10	S(10)	$M_{EXT}/2$	Half of net ultimate bending moment, in.-lb	FBEND	2
11	S(11)		Panel degradation due to proximity of cutout, in.	FBEND	2
12	S(12)		Bending moment reacted by panel and secondary bending elements, in.-lb	FBEND	2
13	S(13)	M_L	Bending moment reacted by primary longerons or stringers, in.-lb	FBEND	2
14	S(14)	A	Area of primary longerons or stringers to react bending moment, in.^{2}	FBEND	2
15	S(15)		Panel width between longerons or stringers, in.	FBEND	2
16	S(16)		Available panel width located at longerons or stringers, in.	FBEND	2

TABLE 37. T ARRAY VARIABLES PRINTED BY SUBROUTINE FUSSHL (CONT)

Loc	Variable Name	Engrg Symbol	Description	Source	
				Routine	Note
17	S(17)		Curvature contribution to panel compression crippling stress, psi	FBEND	2
18	S(18)		Intermediate calculation	FBEND	2
19	S(19)	F_{CCR}	Panel critical compression crippling stress, psi	FBEND	2
20	S(20)	W	Effective panel width located at longerons or stringers, in.	FBEND	2
21	S(21)	M_C	Bending moment reacted by panel in compression, in.-lb	FBEND	2
22	S(22)		Total panel width unaffected by cutouts, in.	FBEND	2
23	S(23)		Number of existing stringers on upper sector	FBEND	3
24	S(24)		Number of stringers on side sector	FBEND	3
25	S(25)		Number of existing stringers on lower sector	FBEND	3
26	S(26)	I	Area moment of inertia of panel, $in.^4$	FBEND	
27	S(27)	I	Area moment of inertia of secondary longerons, $in.^4$	FBEND	
28	S(28)	I	Area moment of inertia of side stringers, $in.^4$	FBEND	
29	S(29)	I	Area moment of inertia of upper cutout longerons, $in.^4$	FBEND	
30	S(30)	I	Area moment of inertia of lower cutout longerons, $in.^4$	FBEND	
31	S(31)	I	Area moment of inertia of upper longerons or stringers, $in.^4$	FBEND	2
32	S(32)	I	Area moment of inertia of lower longerons or stringers, $in.^4$	FBEND	2

TABLE 37. T ARRAY VARIABLES PRINTED BY SUBROUTINE FUSSHL (CONT)

Loc	Variable Name	Engrg Symbol	Description	Source	
				Routine	Note
33	S(33)	ΔEI	Incremental vertical or side bending stiffness required, lb-in.^{2}	FBEND	2, 4
34	S(34)		Incremental area of upper longerons or stringers, in.^{2}	FBEND	2, 4
35	S(35)		Incremental area of lower longerons or stringers, in.^{2}	FBEND	2, 4
36	S(36)	Z	Vertical distance from neutral axis to upper cutout longeron, in.	FBEND	2, 5
37	S(37)	Z	Vertical distance from neutral axis to lower cutout longeron, in.	FBEND	2, 5
38	S(38)	A_{CO}	Area of upper cutout longeron (intermediate calculation), in.^{2}	FBEND	6
39	S(39)	A_{CO}	Area of lower cutout longeron (intermediate calculation), in.^{2}	FBEND	2, 6
40	S(40)	A_{ST}/t	Area per unit thickness of upper longeron or side stringer, in.^{2}/in.	FBEND	2, 7
41	S(41)		Distance from cover to longeron or stringer centroid, in.	FBEND	2, 7
42	S(42)	I/t	Longeron or stringer inertia per unit thickness, in.^{4}/in.	FBEND	7
43	S(43)	ρ_S	Longeron or stringer radius of gyration about neutral axis, in.	FBEND	2, 7
44	S(44)	t_S	Initial longeron or stringer thickness estimate, in.	FBEND	7
45	S(45)	t_S	Longeron or stringer thickness required to resist induced compression load from shear panel, in.	FBEND	

TABLE 37. T ARRAY VARIABLES PRINTED BY SUBROUTINE FUSSHL (CONT)

Loc	Variable Name	Engrg Symbol	Description	Source	
				Routine	Note
46	S(46)	$1+(e/\rho_S)^2$	Longeron or stringer effective area constant	FBEND	2, 7
47	S(47)		Intermediate calculation	FBEND	7
48	S(48)		Intermediate calculation	FBEND	7
49	S(49)		Not used		
50	S(50)				1, 2
51	S(51)	$f_{ST\ allow}$	Allowable stringer or longeron crippling stress, psi	FBEND	2, 7
52	S(52)	f_{ST}/f_{STMAX}	Ratio of average induced longeron or stringer stress to maximum stress	FBEND	2, 7
53	S(53)	X_a	Intermediate calculation	FBEND	2, 7
54	S(54)	X_b, P	Intermediate calculation and longeron compression load due to bending moment, lb	FBEND	2, 7
55	S(55)	X_C,A	Intermediate calculation and longeron area required for combined bending and forced crippling, in.^{2}	FBEND	2, 7
56	S(56)	t_S	Initial longeron or stringer thickness estimate, in., or longeron compression load due to bending moment, lb	FBEND	2, 7
57	S(57)		Intermediate calculation and longeron area required for combined bending and forced crippling, in.^{2}	FBEND	2, 7
58	S(58)		Intermediate calculation	FBEND	7
59	S(59)		Intermediate calculation	FBEND	7
60	S(60)		Intermediate calculation	FBEND	7
61	S(61)		Difference between initial longeron or stringer thickness and iterated value, in.	FBEND	7

TABLE 37. T ARRAY VARIABLES PRINTED BY SUBROUTINE FUSSHL (CONT)

Loc	Variable Name	Engrg Symbol	Description	Source	
				Routine	Note
62	S(62)	y	Lateral distance to upper cutout longeron, in.	FBEND	5
63	S(63)	y	Lateral distance to lower cutout longeron, in., or upper cutout width, in.	FBEND	3, 5
64	S(64)		Lower cutout width, in.	FBEND	3
65	S(65)		Not used		
.	.		To		
100	S(100)		Not used		
101	S1(1)	b, d/D	Stringer spacing, in., or longeron height ratio	I1LONG	
102	S1(2)		Number of stringers or longerons	I1LONG	
103	S1(3)		Number of secondary longerons or longitudinal stiffeners	I1LONG	
104	S1(4)	D	Total fuselage depth, in.	I1LONG	
105	S1(5)	I/t	Upper panel vertical section inertia per unit thickness, in.^{4}/in.	I1LONG	
106	S1(6)	I/t	Lower panel vertical section inertia per unit thickness, in.^{4}/in.	I1LONG	
107	S1(7)	I/t	Upper panel lateral section inertia per unit thickness, in.^{4}/in.	I1LONG	
108	S1(8)	I/t	Lower panel lateral section inertia per unit thickness, in.^{4}/in.	I1LONG	
109	S1(9)	I/t	Side panel vertical section inertia per unit thickness, in.^{4}/in.	I1LONG	
110	S1(10)	I/t	Side panel lateral section inertia per unit thickness, in.^{4}/in.	I1LONG	
111	S1(11)	I/A	Upper stringers or longerons vertical section inertia per unit area, in.^{4}/in.^{2}	I1LONG	

TABLE 37. T ARRAY VARIABLES PRINTED BY SUBROUTINE FUSSHL (CONT)

Loc	Variable Name	Engrg Symbol	Description	Source	
				Routine	Note
112	S1(12)	I/A	Lower stringers or longerons vertical section inertia per unit area, in.^{4}/in.^{2}	I1LONG	
113	S1(13)	I/A	Upper stringers or longerons lateral section inertia per unit area, in.^{4}/in.^{2}	I1LONG	
114	S1(14)	I/A	Lower stringers or longerons lateral section inertia per unit area, in.^{4}/in.^{2}	I1LONG	
115	S1(15)	I/A	Side stringers vertical section inertia per unit area, in.^{4}/in.^{2}	I1LONG	
116	S1(16)	I/A	Side stringers lateral section inertia per unit area, in.^{4}/in.^{2}	I1LONG	
117	S1(17)	I/A	Secondary longerons vertical section inertia per unit area, in.^{4}/in.^{2}	I1LONG	
118	S1(18)	I/A	Secondary longerons lateral section inertia per unit area, in.^{4}/in.^{2}	I1LONG	
119	S1(19)	Q/A	Primary longerons or stringers vertical area moment per unit area, in.^{3}/in.^{2}	I1LONG	
120	S1(20)	Q/A	Primary longerons or stringers lateral area moment per unit area, in.^{3}/in.^{2}	I1LONG	
121	S2(1)	M	Maximum down bending moment based on moment over longeron compression yield stress, in.-lb	LDCHK	
122	S2(2)	M	Maximum up bending moment based on moment over longeron compression yield stress, in.-lb	LDCHK	

TABLE 37. T ARRAY VARIABLES PRINTED BY SUBROUTINE FUSSHL (CONT)

Loc	Variable Name	Engrg Symbol	Description	Source	
				Routine	Note
123	S2(3)	V	Maximum shear based on shear over cover ultimate shear strength, lb	LDCHK	
124	S2(4)		Maximum down force due to contents in segment forward of synthesis cut, lb	LDCHK	
125	S2(5)		Maximum up force due to contents in segment forward or synthesis cut, lb	LDCHK	
126	S2(6)		Load condition number that causes maximum down force	LDCHK	
127	S2(7)		Vehicle center of gravity to go with maximum down force, in.	LDCHK	
128	S2(8)		Limit to ultimate load factor to go with maximum down force	LDCHK	
129	S2(9)	N_Z	Vertical load factor to go with maximum down force	LDCHK	
130	S2(10)	$\dot{Q}$	Pitching acceleration to go with maximum down force, radians/sec^2	LDCHK	
131	S2(11)		Load condition number that causes maximum up force	LDCHK	
132	S2(12)		Vehicle center of gravity to go with maximum up force, in.	LDCHK	
133	S2(13)		Limit to ultimate load factor to go with maximum up force	LDCHK	
134	S2(14)	N_Z	Vertical load factor to go with maximum up force	LDCHK	
135	S2(15)	$\dot{Q}$	Pitching acceleration to go with maximum up force, radians/sec^2	LDCHK	
136	S2(16)	V	Maximum vertical shear introduced by wing, lb	LDCHK	
137	S2(17)	V	Maximum vertical shear introduced by horizontal tail, lb	LDCHK	

TABLE 37. T ARRAY VARIABLES PRINTED BY SUBROUTINE FUSSHL (CONT)

Loc	Variable Name	Engrg Symbol	Description	Source	
				Routine	Note
138	S2(18)	M	Maximum roll moment introduced by vertical tail, in.-lb	LDCHK	
139	S2(19)	V	Maximum vertical shear introduced by nacelle, lb	LDCHK	
140	S2(20)	V	Maximum vertical shear introduced by store or other component, lb	LDCHK	
141	S3(1)	q	Shear flow, lb/in.	FCOVER	
142	S3(2)	$1-\mu^2$	1 minus Poisson's ratio squared	FCOVER	
143	S3(3)	$(1-\mu^2)^{.5}$	Square root of 1 minus Poisson's ratio squared	FCOVER	
144	S3(4)	$K_S\pi^2E/b^2$	Shear resistant thickness function, lb/in.^{4}	FCOVER	
145	S3(5)	F_S	Shear stress, psi	FCOVER	
146	S3(6)	F_{SCR}	Critical buckling shear stress, psi	FCOVER	
147	S3(7)	K_S	Shear buckling coefficient	FCOVER	
148	S3(8)	b	Shear panel minimum span, in.	FCOVER	
149	S3(9)	b	Shear panel vertical distance between supports, in.	FCOVER	
150	S3(10)	t	Basic flutter thickness,in.	FCOVER	
151	S3(11)	t	Basic acoustic fatigue thickness, in.	FCOVER	
152	S2(12)	t	Upper panel land thickness for pressure design, in.	CVPRES	
153	S3(13)	t	Side panel land thickness for pressure design, in.	CVPRES	
154	S3(14)	t	Lower panel land thickness for pressure design, in.	CVPRES	
155	S3(15)	t	Upper panel field thickness for pressure design, in.	CVPRES	
156	S3(16)	t	Side panel field thickness for pressure design, in.	CVPRES	

TABLE 37. T ARRAY VARIABLES PRINTED BY SUBROUTINE FUSSHL (CONT)

Loc	Variable Name	Engrg Symbol	Description	Source	
				Routine	Note
157	S3(17)	t	Lower panel field thickness for pressure design, in.	CVPRES	
158	S3(18)	t	Basic acoustic fatigue field thickness, in.	FCOVER	
159	S3(19)	t	Upper panel thickness for flutter design, in.	FCOVER	
160	S3(20)	t	Lower panel thickness for flutter design, in.	FCOVER	
161	S4(1)	$A_{e_{RG}}$	Minor frame depth, in.	FUSSHL	
162	S4(2)		Minor frame effective area, in.^{2}	MINFR	
163	S4(3)	α	Principal diagonal tension angle, radians	MINFR	
164	S4(4)	K	Degree to which diagonal tension is developed	MINFR	
165	S4(5)	$f_{ST\ MAX}$	Maximum forced crippling stress in longitudinal members, psi	FBEND	
166	S4(6)	P_{MAX}	Maximum forced crippling load in longitudinal members, lb	FBEND	
167	S4(7)	A	Area of longitudinal member that resists forced crippling, in.^{2}	FBEND	
168	S4(8)		Not used		
.	.		To		
180	S4(20)		Not used		
181	S5(1)		Depth of pressurized compartment, in.	BLKHDS	8
182	S5(2)		Width of pressurized compartment, in.	BLKHDS	8
183	S5(3)		Limit uniform pressure, psi		8
184	S5(4)		Incremental pressure due to hydraulic (fuel) head, psi	BLKHDS	8
185	S5(5)		Limit to ultimate design factor	BLKHDS	8
186	S5(6)		Limit tensile strength for bulkhead design, psi	BLKHDS	8

TABLE 37. T ARRAY VARIABLES PRINTED BY SUBROUTINE FUSSHL (CONCL)

Loc	Variable Name	Engrg Symbol	Description	Source	
				Routine	Note
187	S5(7)	F_{cy}	Compression yield stress, psi	BLKHDS	8
188	S5(8)	E_c	Bulkhead material compression modulus of elasticity, psi	BLKHDS	8
189	S5(9)		Surface area of bulkhead, in.^{2}	BLKHDS	8
190	S5(10)	$\bar{t}$	Equivalent bulkhead thickness for specified pressure loading, in.	DBLKHD	8
191	S5(11)	$\bar{t}$	Equivalent bulkhead thickness that satisfies all design loadings, in.	BLKHDS	8
192	S5(12)		Fuel density, lb/in.^{3}	BLKHDS	8
193	S5(13)		Not used		
.	.		To		
200	S5(20)		Not used		

NOTE
1. Random data are printed which could have originated from various subroutines.
2. Bulkhead design data would be printed when a bulkhead occurs at the synthesis cut. This output is shown in Table 38.
3. Random data or zero would be printed if longeron construction structure is evaluated.
4. Random data or zero would be printed if strength sizing provides a stiffness greater than input required stiffness.
5. Random data would be printed if there is no degradation due to the proximity of upper or lower cutouts.
6. Random data would be printed if longeron construction is evaluated or if there is no degradation due to the proximity of upper or lower cutouts on stringer construction structure.
7. Random data would be printed if critical buckling shear stress, location 146, is greater than the side panel shear stress, location 145.
8. Data for the bulkhead at the cut, or if none exist for the last previous bulkhead, would appear in the printed output.

TABLE 38. T ARRAY VARIABLES PRINTED BY SUBROUTINE FUSSHL WHEN BULKHEAD EXISTS AT CUT

Loc	Variable Name	Engrg Symbol	Description	Source	
				Routine	Note
1	S(1)	d	First bulkhead stiffener spacing, in.	DBLKHD	
2	S(2)		Peripheral edge length of bulkhead, in.	BLKHDS	
3	S(3)	d	Third bulkhead stiffener spacing, in.	DBLKHD	
4	S(4)	d	Optimum bulkhead stiffener spacing, in.	DBLKHD	
5	S(5)	$\bar{t}$	Equivalent bulkhead thickness at first spacing, in.	DBLKHD	
6	S(6)	$\bar{t}$	Equivalent bulkhead thickness at second spacing, in.	DBLKHD	
7	S(7)	$\bar{t}$	Equivalent bulkhead thickness at third spacing, in.	DBLKHD	
8	S(8)	$\bar{t}$	Equivalent bulkhead thickness at optimum stiffener spacing, in.	DBLKHD	
9	S(9)				1
10	S(10)		Intermediate calculation	MINMUM	
11	S(11)		Intermediate calculation	MINMUM	
12	S(12)		Intermediate calculation	MINMUM	
13	S(13)		Intermediate calculation	MINMUM	
14	S(14)		Intermediate calculation	MINMUM	
15	S(15)		Intermediate calculation	MINMUM	
16	S(16)		Intermediate calculation	MINMUM	
17	S(17)		Intermediate calculation	MINMUM	
18	S(18)		Intermediate calculation	MINMUM	
19	S(19)	a	Constant in thickness - spacing equation	MINMUM	
20	S(20)	b	Constant in thickness - spacing equation	MINMUM	
21	S(21)	c	Constant in thickness - spacing equation	MINMUM	
22	S(22)		Bulkhead stiffener spacing at which slope of the curve is zero (optimum), in.	MINMUM	

TABLE 38. T ARRAY VARIABLES PRINTED BY SUBROUTINE FUSSHL WHEN BULKHEAD EXISTS AT CUT (CONT)

Loc	Variable Name	Engrg Symbol	Description	Source	
				Routine	Note
23	S(23)				1
.	.				
30	S(30)				1
31	S(31)	P_2	Ultimate uniform pressure, psi	DBLKHD	
32	S(32)	P_1	Ultimate pressure from hydraulic head, psi	DBLKHD	
33	S(33)		Intermediate calculation	DBLKHD	
34	S(34)		Intermediate calculation	DBLKHD	2
35	S(35)		Intermediate calculation	DBLKHD	
36	S(36)	M_{max}	Maximum bulkhead bending moment, in.-lb/in.	DBLKHD	
37	S(37)	L	Shortest beaming distance between edges of bulkhead, in.	DBLKHD	
38	S(38)				1
39	S(39)	P	Maximum ultimate pressure, psi	DBLKHD	
40	S(40)	t_w	Bulkhead web field thickness, in.	DBLKHD	
41	S(41)		Intermediate calculation	DBLKHD	
42	S(42)				1
43	S(43)		Intermediate calculation	DBLKHD	
44	S(44)				1
45	S(45)		Intermediate calculation	DBLKHD	
46	S(46)	$\bar{t}_s$	Equivalent stiffener thickness, in.	DBLKHD	
47	S(47)				1
48	S(48)				1
49	S(49)				1
50	S(50)	P	Maximum limit pressure, psi	DBLKHD	
51	S(51)	t_L	Bulkhead web land thickness for strength, in.	DBLKHD	
52	S(52)		Intermediate calculation	DBLKHD	
53	S(53)	t_w	Bulkhead web field thickness, in.	DBLKHD	
54	S(54)	t_s	Bulkhead stiffener web thickness, in.	DBLKHD	

TABLE 38. T ARRAY VARIABLES PRINTED BY SUBROUTINE FUSSHL WHEN BULKHEAD EXISTS AT CUT (CONCL)

Loc	Variable Name	Engrg Symbol	Description	Source	
				Routine	Note
55	S(55)	H	Bulkhead stiffener flange width, in.	DBLKHD	
56	S(56)		Stiffener cap thickness less bulkhead land thickness, in.	DBLKHD	3
57	S(57)		Intermediate calculation	DBLKHD	
58	S(58)				1
.					
64	S(64)				1
65	S(65)		Not used		
.			To		
100	S(100)		Not used		
101	S1(1)				1
.	.				
200	S5(20)				1

NOTE 1. Refer to Table 37 for discussion of variables.

2. Random data would be printed if the bulkhead loading is a uniform pressure.

3. Random data would be printed if the stiffener cap thickness is less than, or equal to, the bulkhead web land thickness.

SUBROUTINE CUTOUT

General Description

Deck name: CUTOUT
Entry name: CUTOUT
Called by: FUSSHL
Subroutines called: None

This subroutine examines the upper and lower panels to determine the effects of cutouts. This routine evaluates both the condition where a cutout exists at a synthesis cut and the condition where there is apparent degradation in panel effectiveness due to the proximity of cutouts. A shear lag angle with a 2-to-1 slope is used to approximate the effect of cutouts occurring either forward or aft of a given synthesis cut.

Arrays and Variables Used

BL	Refer to Table 10
BU	Refer to Table 10
CTOL	Refer to Table 10
CTOU	Refer to Table 10
D	Refer to Tables 10 and 12
DELX	Refer to Table 10
NC	Refer to Table 10

Arrays and Variables Calculated

RTL	Refer to Table 10
RTU	Refer to Table 10
S(1)	Apparent upper panel degradation at previous cut, in.
S(2)	Apparent lower panel degradation at previous cut, in.
S(3)	Cutout at subsequent cut(s), in.
S(4)	Apparent degradation due to cutout at subsequent cut(s), in.

Labeled Common Arrays

None

Mass Storage File Records

None

Error Messages

None

SUBROUTINE LDCHK

General Description

Deck name: LDCHK
Entry name: LDCHK
Called by: FUSSHL
Subroutines called: None

This subroutine scans through all the vehicle load conditions for the critical design loads at the specific shell cut (I). Design bending moments and shear, maximum external surface and component loads, and the conditions which produce the maximum up-and-down inertia forces are determined within this routine.

The critical design load search consists of reading the load data (S6 array) and the corresponding material property data (TMS array) from the mass storage files. The critical loads are determined as a function of the appropriate load strength index. Design up-and-down bending moment is determined by searching for the maximum ratio of moment over longeron (stringer) compression yield strength. Design shear is determined by the maximum ratio of the absolute value of shear over cover ultimate shear strength. The load condition numbers (LCN) which produce the critical loads at the cut are stored in the I1, I2, and I3 arrays for final output print.

This routine determines the maximum external surface and component loads which are used by subroutine MISCWT to calculate the weight of support fittings. The maximum loads consist of the maximum shears from the wing, horizontal tail, and other items that may be supported externally, and the maximum bending moment from the vertical tail.

The routine also searches for the design conditions which produce the maximum up-and-down forces due to the contents. These maximum forces are indicative of the local load factor and weight of contents. Should fuel exist at the cut, the conditions that produce the maximum forces would also cause the maximum internal pressure due to the hydraulic head. Subroutines CVPRES and BLKHDS use the load factor, pitching acceleration, and vehicle center of gravity for these conditions.

Arrays and Variables Used

D	Refer to Tables 10 and 12
NOC	Refer to Table 10
S6	Refer to Tables 10 and 23
TMS	Refer to Tables 10 and 26

Arrays and Variables Calculated

FMP	Refer to Tables 10 and 15
I1	Refer to Table 10
I2	Refer to Table 10
I3	Refer to Table 10
S(1)	Intermediate calculations for M/Fcy and V/Fsu
•	To
S(7)	Intermediate calculations for M/Fcy and V/Fsu
S(8)	Maximum wing reaction (absolute value), lb
S(9)	Maximum horizontal tail reaction (absolute value), lb
S(10)	Maximum moment at side of vertical tail attach frame (absolute value), in.-lb
S(11)	Maximum nacelle reaction (absolute value), lb
S(12)	Maximum reaction from other stores (absolute value), lb
S2	Critical design loads data (refer to Table 36)

Labeled Common Arrays

None

Mass Storage File Records

Read by Subroutine
Records 61-84, 85-108

Written by Subroutine
None

Error Messages

None

SUBROUTINE GJ1GEO

General Description

Deck name: GJ1GEO
Entry name: GJ1GEO
Called by: FUSSHL
Subroutines called: None

This subroutine calculates the section geometry which provides torsional capability for rounded rectangle shell shapes. The presence of upper or lower cutouts and decks or shrouds determines the effective torque cell immediately forward and aft of each synthesis cut. Should a torsional stiffness requirement be specified, panel thickness is calculated to provide the required stiffness. The geometry calculated in this routine is also used to define the bulkhead surface area and peripheral length.

The basic assumption in the geometry calculations is that torsional capability is provided by a single torque cell. Differential bending as a means of providing this rigidity is not within the current scope of this routine. Therefore, certain geometric cutout and deck combinations cannot be evaluated by this routine. These arrangements and the program deviations are tabulated as follows:

1. Should decks exist without any cutouts, the total shell section defines the torque cell.

2. Should cutouts exist without any decks, the total shell section defines the torque cell.

3. Should both upper and lower panel cutouts exist in the presence of a deck, the section above the deck is used in the determination of the torque cell.

Arrays and Variables Used

BMN	Refer to Table 10
CIND	Refer to Tables 10 and 11
CTOL	Refer to Table 10
CTOU	Refer to Table 10
D	Refer to Tables 10 and 12
DKHT	Refer to Table 10
DOO	Refer to Table 10
FD	Refer to Table 10
FMP	Refer to Tables 10 and 15

GJRD	Refer to Table 10
NC	Refer to Table 10
RAD	Refer to Table 10
RO	Refer to Table 10
S4	Refer to Table 36
WO	Refer to Table 10

Arrays and Variables Calculated

ACRS	Refer to Table 10
ANTA	Refer to Table 10
ANTF	Refer to Table 10
DEPA	Refer to Table 10
DEPF	Refer to Table 10
DKHT	Refer to Table 10
PERA	Refer to Table 10
PERF	Refer to Table 10
PRDA	Refer to Table 10
PRDF	Refer to Table 10
S	Intermediate calculations and as follows:
S(10)	Fuselage width at cut, in.
S(11)	Fuselage depth at cut, in.
S(12)	Fuselage perimeter at cut, in.
S(13)	Fuselage cross-section area at cut, $in.^2$
S(14)	Cover shear modulus at critical shear condition, psi
S(15)	Deck height to total fuselage depth ratio
S(16)	Shroud radius, in.
S(17)	Distance from mold line to deck (enclosed), in.
S(20)	Deck or shroud peripheral length, in.
S(24)	Enclosed cross-section area of torque cell, $in.^2$
S(25)	Cover peripheral length effective in torsion, in.
S(26)	Cover thickness required to satisfy torsional rigidity, in.
S(41)	Maximum vertical dimension of torque cell, in.
TGJA	Refer to Table 10
TGJF	Refer to Table 10
WIDA	Refer to Table 10
WIDF	Refer to Table 10

Labeled Common Arrays

None

Mass Storage File Records

None

Error Messages

- ***ERROR MESSAGE***
  CHECK INPUT DATA SET SECTION XXX DECK HEIGHT ERROR

The foregoing message is printed when the input deck height to total fuselage depth ratio is greater than 1.0. The routine revises the depth ratio to zero at cut XXX. The input data should be corrected if this default action is not acceptable.

- ***WARNING MESSAGE***
  SECTION XXX SHROUD DATA - CUTOUT - FRAME DEPTH IS LESS THAN NOTED

The foregoing message is printed when the shroud and deck geometry results in a frame depth less than that indicated by the input data. The routine proceeds with the geometry calculations as if no difficulties exist. In most instances, no user corrective measure is necessary.

- ***ERROR MESSAGE***
  CHECK INPUT DATA SET SECTION XXX DECK HEIGHT OR RADIUS ERROR

The foregoing message is printed when the combination of deck height, shroud radius, and the number of shrouds does not fall within the confines of the section. The default action is to use the total shell cross section to define the torque cell.

SUBROUTINE GJ2GEO

General Description

Deck name: GJ2GEO
Entry name: GJ2GEO
Called by: FUSSHL
Subroutines called: None

This subroutine is currently a dummy routine that would be written to evaluate the torsional section for elliptical shape fuselages.

SUBROUTINE LONGS

General Description

Deck name: LONGS
Entry name: LONGS
Called by: FUSSHL
Subroutines called: I1LONG, I2LONG, FPANEL

This subroutine establishes the basic design controls for longeron or stringer construction at the synthesis cuts.

For longeron construction fuselages, the routine locates the primary longerons. The longeron position data are either defined at the local cuts or by a general position data. Should local data be defined, they take precedence over the general position data. The input data, if defined in terms of angular position, are converted to a depth ratio.

Stringer construction may be either for fixed spacing or for an optimum spacing search. For either condition, the operation is limited to a minimum of four stringers. The stringer spacing search starts at a predefined minimum spacing. Subroutines I1LONG, I2LONG, and FPANEL are called to calculate the cover, minor frame, and stringer sizing at that spacing. The stringer spacing is progessively increased at fixed spacing increments until shell weight increases with increased spacing. A final synthesis pass is made at the spacing prior to the spacing which produced an increase in shell weight. The counter ISTG is used to direct the search process as follows:

ISTG = 1 Initial spacing pass
ISTG = 2 Second or subsequent spacing pass
ISTG = 3 Final stringer spacing pass or longeron construction

Arrays and Variables Used

CIND	Refer to Tables 10 and 11
D	Refer to Tables 10 and 12
DOO	Refer to Table 10
HTLG	Refer to Table 10
ICST	Refer to Table 10
KC	Refer to Table 10
PER	Refer to Table 10
RO	Refer to Table 10
TOT	Refer to Tables 10 and 27

Arrays and Variables Calculated

BSTR	Refer to Table 10
CIND	Refer to Tables 10 and 11
HTLG	Refer to Table 10
ISTG	Refer to Table 10
S(1)	Longeron location as a fraction of fuselage depth or angular position, radians
STNO	Refer to Table 10

S1(1)	Stringer spacing, in., or longeron location as a fraction of fuselage depth
S1(2)	Number of stringers or primary longerons
S1(3)	Number of secondary longerons
TOT	Refer to Tables 10 and 27

Labeled Common Arrays

None

Mass Storage File Records

None

Error Messages

- ***LONGERON DEPTH ERROR***
  PROGRAM OVERRIDE ALPHA = PI/4

The foregoing message is printed when both the local and general longeron position data are not input. The angular location of 45 degrees is assumed and placed in the general position data location (CIND(13)). If this program default operation is acceptable, no corrective action is required.

- ***LONGERON DEPTH ERROR***
  PROGRAM OVERRIDE HEIGHT RATIO = 0.9

The foregoing message is printed when either the local or general longeron position data are a positive value greater than 1.0. This default operation places the longerons at 90 percent of the fuselage depth.

SUBROUTINE I1LONG

General Description

Deck name: I1LONG
Entry name: I1LONG
Called by: LONGS
Subroutines called: None

This subroutine calculates the longeron or stringer moment of inertia per unit area and the cover area moment of inertia per unit thickness for rounded rectangle shell shapes. The routine also calculates the vertical and lateral area moment per unit area of the primary bending elements. All of the calculations are made about the geometric neutral axis.

The vertical and lateral area moment of inertia per unit thickness is calculated for the upper, side, and lower sector cover panels without any cutout considerations.

For longeron construction, the lateral locations of the primary longerons are determined from their vertical position and the shell mold line shape. Should the combination of shell shape and vertical position result in an insufficient definition, the longerons are located at the furthest outboard position consistent with the other parameters. Secondary longitudinal members are located at half the vertical and lateral locations of the primary longerons. The vertical and lateral area moments per unit area are only calculated for the primary longerons.

For stringer construction, the stringers are positioned at equal spacings, with the first stringer located a half spacing from the top centerline. Separate area moment of inertia per unit area calculations are made for the stringers on the upper, side, and lower sectors. Vertical and lateral area moments per unit area are calculated for the total number of stringers without any consideration for the fact that the areas might differ in the different sectors.

Arrays and Variables Used

D	Refer to Tables 10 and 12
DOO	Refer to Table 10
ICST	Refer to Table 10
RO	Refer to Table 10
WO	Refer to Table 10

Arrays and Variables Calculated

S	Intermediate calculations
S1	Area moment of inertia and are moments (refer to Table 36)

Labeled Common Arrays

None

Mass Storage File Records

None

Error Messages

None

SUBROUTINE I2LONG

General Description

Deck name: I2LONG
Entry name: I2LONG
Called by: LONGS
Subroutines called: None

This subroutine is currently a dummy routine that would be written to calculate the section inertias for elliptical shape fuselages.

SUBROUTINE FPANEL

General Description

Deck name: FPANEL
Entry name: FPANEL
Called by: LONGS
Subroutines called: FCOVER, FHCMB, MINFR, FBEND

This subroutine establishes the basic design controls for the frame spacing search procedure. This search loop is nested within the stringer spacing search loop.

The frame spacing is either defined at the local cuts or as general frame spacing data. Should local data be defined, they take precedence over the general frame spacing data. The type of operation is defined by the spacing data. If a thousand has been added to the frame spacing, a fixed spacing is indicated. Should frame spacing search be indicated by an input minimum, the search for optimum spacing starts at that value. The frame spacing is progressively increased at fixed spacing increments until shell weight increases with increased spacing. A final synthesis pass is made at the spacing prior

to the spacing which produced an increase in shell weight. The counter IFRM is used to direct the search process as follows:

IFRM =	1	Initial spacing pass
	2	Second or subsequent spacing pass
	3	Final spacing or fixed spacing pass

Should the initial spacing or any intermediate spacing exceed the predefined maximum, the search is abbreviated at the maximum spacing. The maximum frame spacing is input as a fraction of the equivalent shell diameter.

Arrays and Variables Used

CIND	Refer to Tables 10 and 11
D	Refer to Tables 10 and 12
FRML	Refer to Table 10
ICST	Refer to Table 10
PER	Refer to Table 10
TOT	Refer to Tables 10 and 27

Arrays and Variables Calculated

CIND	Refer to Tables 10 and 11
IFRM	Refer to Table 10
S(1)	Maximum allowable frame spacing, in.
SFRM	Refer to Table 10
TOT	Refer to Tables 10 and 27

Labeled Common Arrays

None

Mass Storage File Records

None

Error Messages

- ***FRAME SPACING DEFINITION ERROR***
  GENERAL FRAME SPACING HAS BEEN SET AT 6 INCHES

The foregoing message is printed when both the local and general frame spacing data are not defined. A frame spacing search starting at 6 inches is the default directive placed in the general spacing data location (CIND(17)).

SUBROUTINE FHCMB

General Description

Deck name: FHCMB
Entry name: FHCMB
Called by: FPANEL
Subroutines called: None

This subroutine is currently a dummy routine that would be written to synthesize honeycomb panel construction fuselages.

SUBROUTINE FCOVER

General Description

Deck name: FCOVER
Entry name: FCOVER
Called by: FPANEL
Subroutines called: CVPRES

This subroutine calculates cover thickness required to satisfy the different design requirements for either milled or constant-thickness construction. The process consists of a systematic evaluation which starts at minimum gage, and investigates each criteria in search of the critical design requirement. The upper, side, and lower sector cover panel thicknesses are determined separately.

The side panel is established by tests on shear strength, pressure design, local panel flutter, and acoustic fatigue requirements. The upper and lower panel tests consist of pressure design, local panel flutter, and acoustic fatigue requirements. Subroutine CVPRES is called to determine the cover thicknesses that satisfy the pressure strength requirements.

Arrays and Variables Used

ACOU	Refer to Table 10
BL	Refer to Table 10
BS	Refer to Table 10
BSTR	Refer to Table 10

BU	Refer to Table 10
CIND	Refer to Tables 10 and 11
D	Refer to Tables 10 and 12
EQUA	Refer to Tables 10 and 13
FMP	Refer to Tables 10 and 15
ICST	Refer to Tables 10
PRES	Refer to Table 10
RCL	Refer to Table 10
RCS	Refer to Table 10
RCU	Refer to Table 10
RHOF	Refer to Table 10
SFRM	Refer to Table 10
S1	Refer to Table 36
S2	Refer to Table 36
S3	Refer to Table 36

Arrays and Variables Calculated

IMIL	Refer to Table 10
S	Intermediate Calculations
S3	Refer to Table 36
S5(1)	Upper panel land thickness required for acoustic fatigue, in.
S5(2)	Upper panel field thickness required for acoustic fatigue, in.
S5(3)	Side panel land thickness required for acoustic fatigue, in.
S5(4)	Side panel field thickness required for acoustic fatigue, in.
S5(5)	Lower panel land thickness required for acoustic fatigue, in.
S5(6)	Lower panel field thickness required for acoustic fatigue, in.
TCF	Refer to Table 10
TCL	Refer to Table 10
TCS	Refer to Table 10
TCU	Refer to Table 10
TLL	Refer to Table 10
TLS	Refer to Table 10
TLU	Refer to Table 10
TOT	Refer to Table 10

Labeled Common Arrays

None

Mass Storage File Records

None

Error Messages

None

SUBROUTINE CVPRES

General Description

Deck name: CVPRES
Entry name: CVPRES
Called by: FCOVER
Subroutines called: None

This subroutine calculates the cover thicknesses required to react the design pressures. The routine evaluates either milled or constant-thickness cover panels. For milled panel designs, the land thickness to field thickness ratio is not allowed to exceed 2.5. The upper, side, and lower panel thicknesses are established by the local geometry and design pressures. The internal deck arrangements determine the cover sectors which are affected by pressure. The routine examines both the combined bending and diaphragm action mode and the hoop tension mode for reacting the pressure. The routine then selects the least energy path (minimum thickness) as the primary design mode. Should the panel radius of curvature be zero, indicating a flat panel, only the bending diaphragm path is investigated.

Negative pressure data (PRES) designate a human environment; in which case, the shell sectors above any deck are pressurized. A limit to ultimate factor of safety of 2.0 is used for this condition. Cover strength and allowable stress for fatigue are checked to determine the design stress level.

A positive pressure without any fuel data (RHOF) designates a pressurized compartment. This condition is evaluated in the same manner as for manned compartments, except for the use of 1.5 for a limit to ultimate factor of safety.

Fuel pressure may occur with or without vent pressure. A negative fuel density (RHOF) designates the location of fuel below the deck and, conversely, a positive value designates fuel above the deck. The maximum positive and negative load factors at the synthesis cut, fuel density, tank height, and vent pressure are used to calculate the design pressures for the different sectors of the shell. The limit to ultimate factor of safety for the specific design condition is used. Material strength is used to calculate the required thicknesses. Fatigue allowable due to fuel pressure is not within the current capabilities.

Arrays and Variables Used

D	Refer to Tables 10 and 12
DKHT	Refer to Table 10
EQUA	Refer to Tables 10 and 13
FMP	Refer to Tables 10 and 15
IMIL	Refer to Table 10
PRES	Refer to Table 10
RCL	Refer to Table 10
RCS	Refer to Table 10
RCU	Refer to Table 10
RHOF	Refer to Table 10
S1	Refer to Table 36
S2	Refer to Table 36
S3	Refer to Table 36
XO	Refer to Table 10

Arrays and Variables Calculated

S(2)	Limit to ultimate factor of safety
S(3)	Upper panel limit allowable stress, psi
S(4)	Side panel limit allowable stress, psi
S(5)	Lower panel limit allowable stress, psi
S(6)	Maximum positive limit load factor
S(7)	Maximum negative limit load factor
S(8)	Fuel tank depth, in.
S(9)	Panel land thickness to field thickness ratio
S(11)	Limit design pressure for upper panel, psi
S(12)	Limit design pressure for side panel, psi
S(13)	Limit design pressure for lower panel, psi
S(14)	Upper panel thickness to react pressure in hoop stress, in.
S(15)	Side panel thickness to react pressure in hoop stress, in.
S(16)	Lower panel thickness to react pressure in hoop stress, in.
S2	Refer to Table 36
S3	Refer to Table 36

Labeled Common Arrays

None

Mass Storage File Records

None

Error Messages

None

SUBROUTINE MINFR

General Description

Deck name: MINFR
Entry name: MINFR
Called by: FPANEL
Subroutines called: None

This subroutine calculates the minor frame sizing to satisfy general shell stability, acoustic fatigue, and local forced crippling. The upper and lower frame sectors are sized for general shell stability and acoustic fatigue. The side sector of the frame is sized to satisfy all three requirements.

A total of 200 variables from the T array are printed by Subroutine MINFR. These are defined in Table 39.

Arrays and Variables Used

ACOU	Refer to Table 10
BL	Refer to Table 10
BS	Refer to Table 10
BU	Refer to Table 10
D	Refer to Tables 10 and 12
EQUA	Refer to Tables 10 and 13
FD	Refer to Table 10
FMP	Refer to Tables 10 and 15
ICST	Refer to Table 10
IMIL	Refer to Table 10
IP	Print control (refer to "Labeled Common Arrays")
PER	Refer to Table 10
RCL	Refer to Table 10
RCS	Refer to Table 10
RCU	Refer to Table 10
SFRM	Refer to Table 10
S1	Refer to Table 36
S2	Refer to Table 36
S3	Refer to Table 36
T	Refer to Table 39
TCS	Refer to Table 10

TABLE 39. T ARRAY VARIABLES PRINTED BY SUBROUTINE MINFR

Loc	Variable Name	Engrg Symbol	Description	Source	
				Routine	Note
1	S(1)		Intermediate calculation or zero		1
2	S(2)	A_R/t_R	Frame section area per unit frame cap thickness, in.^{2}/in.	MINFR	
3	S(3)	I/t_R	Frame inertia per unit frame cap thickness, in.^{4}/in.	MINFR	
4	S(4)	A_S	First approximation of longeron or side stringer area, in.^{2}	MINFR	
5	S(5)	ρ_R	Frame radius of gyration about frame neutral axis, in.	MINFR	
6	S(6)	$1+(e/\rho_R)^2$	Effective frame area constant	MINFR	
7	S(7)	t_R	Frame side sector cap thickness, in.	MINFR	
8	S(8)		Maximum longitudinal bending moment, in.-lb, or frame thickness to prevent acoustic fatigue, in.	MINFR	2
9	S(9)	f_S	Side panel shear stress, psi	MINFR	
10	S(10)	f_{SCR}	Side panel critical buckling shear stress, psi	MINFR	
11	S(11)	K	Degree to which diagonal tension is developed	MINFR	3
12	S(12)	.5(1-k)	Intermediate calculation	MINFR	3
13	S(13)	$f_{ST}/\mathrm{COT}\,\alpha$	Stringer or longeron stress divided by cotangent of diagonal tension angle, psi	MINFR	3
14	S(14)	α	Diagonal tension angle, radians	MINFR	3
15	S(15)	f_{RG}/f_{RGMAX}	Ratio of average induced frame stress to maximum stress	MINFR	3

TABLE 39. T ARRAY VARIABLES PRINTED BY SUBROUTINE MINFR (CONT)

Loc	Variable Name	Engrg Symbol	Description	Source	
				Routine	Note
16	S(16)	$f_{RGALLOW}$	Allowable ring crippling stress, psi	MINFR	3
17	S(17)	f_{ST}	Stringer or longeron stress, psi	MINFR	3
18	S(18)	$db_{oa}/20.$	Acoustic pressure divided by 20.,db/20.	MINFR	2
	S(18)	f_{RG}	Frame stress, psi	MINFR	3
19	S(19)		Acoustic pressure, psi	MINFR	2
	S(19)	ε_S	Stringer or longeron strain, in./in.	MINFR	3
20	S(20)		Intermediate calculation	MINFR	2
	S(20)	ε_R	Frame strain, in./in.	MINFR	3
21	S(21)	$\sin 2\alpha$	Intermediate calculation	MINFR	3
22	S(22)	ε_C	Cover strain, in./in.	MINFR	3
23	S(23)		Intermediate calculation	MINFR	3
24	S(24)	$\tan\alpha$	Tangent of diagonal tension angle	MINFR	3
25	S(25)	X_a	Intermediate calculation	MINFR	3
26	S(26)	X_b	Intermediate calculation	MINFR	3
27	S(27)	X_c	Intermediate calculation	MINFR	3
28	S(28)	t_R	Initial frame cap thickness estimate, in.	MINFR	3
29	S(29)		Intermediate calculation	MINFR	3
30	S(30)		Intermediate calculation	MINFR	3
31	S(31)		Intermediate calculation	MINFR	3
32	S(32)		Intermediate calculation	MINFR	3
33	S(33)		Difference between initial frame cap thickness and iterated value, in.	MINFR	3
34	S(34)		Used in routines other than MINFR and is not relevant to the minor frame evaluation		1
.					
39	S(39)				1
40	S(40)		Frame upper sector cap thickness, in.	MINFR	
41	S(41)		Frame lower sector cap thickness, in.	MINFR	
42	S(42)				1

TABLE 39. T ARRAY VARIABLES PRINTED BY SUBROUTINE MINFR (CONT)

Loc	Variable Name	Engrg Symbol	Description	Source	
				Routine	Note
43	S(43)	$L^2/(t_L R)$	Curvature correction term for acoustic fatigue	MINFR	2
44	S(44)	t_c/t_f	Frame upper sector curvature correction factor for acoustics	MINFR	2
45	S(45)	t_c/t_f	Frame side sector curvature correction factor for acoustics	MINFR	2
46	S(46)	t_c/t_f	Frame lower sector curvature correction factor for acoustics	MINFR	2
47	S(47)		Intermediate calculation	MINFR	3
48	S(48)		Intermediate calculation	MINFR	3
49	S(49)		Used in routines other MINFR and are not relevant to the minor frame evaluation		1
.	.				
64	S(64)				1
65	S(65)		Not used		
.	.		To		
100	S(100)		Not used		
101	S1(1)	b,d/D	Stringer spacing, in., or longeron height ratio	I1LONG	
102	S1(2)		Number of stringers or longerons	I1LONG	
103	S1(3)		Number of secondary longerons or longitudinal stiffeners	I1LONG	
104	S1(4)	D	Total fuselage depth, in.	I1LONG	
105	S1(5)	I/t	Upper panel vertical section inertia per unit thickness, in.^{4}/in.	I1LONG	
106	S1(6)	I/t	Lower panel vertical section inertia per unit thickness, in.^{4}/in.	I1LONG	
107	S1(7)	I/t	Upper panel lateral section inertia per unit thickness, in.^{4}/in.	I1LONG	
108	S1(8)	I/t	Lower panel lateral section inertia per unit thickness, in.^{4}/in.	I1LONG	

TABLE 39. T ARRAY VARIABLES PRINTED BY SUBROUTINE MINFR (CONT)

Loc	Variable Name	Engrg Symbol	Description	Source	
				Routine	Note
109	S1(9)	I/t	Side panel vertical section inertia per unit thickness, in.^{4}/in.	I1LONG	
110	S1(10)	I/t	Side panel lateral section inertia per unit thickness, in.^{4}/in.	I1LONG	
111	S1(11)	I/A	Upper stringers or longerons vertical section inertia per unit area, in.^{4}/in.^{2}	I1LONG	
112	S1(12)	I/A	Lower stringers or longerons vertical section inertia per unit area, in.^{4}/in.^{2}	I1LONG	
113	S1(13)	I/A	Upper stringers or longerons lateral section inertia per unit area, in.^{4}/in.^{2}	I1LONG	
114	S1(14)	I/A	Lower stringers or longerons lateral section inertia per unit area, in.^{4}/in.^{2}	I1LONG	
115	S1(15)	I/A	Side stringers vertical section inertia per unit area, in.^{4}/in.^{2}	I1LONG	
116	S1(16)	I/A	Side stringers lateral section inertia per unit area, in.^{4}/in.^{2}	I1LONG	
117	S1(17)	I/A	Secondary longerons vertical section inertia per unit area, in.^{4}/in.^{2}	I1LONG	
118	S1(18)	I/A	Secondary longerons lateral section inertia per unit area, in.^{4}/in.^{2}	I1LONG	
119	S1(19)	Q/A	Primary longerons or stringers vertical area moment per unit area, in.^{3}/in.^{2}	I1LONG	

TABLE 39. T ARRAY VARIABLES PRINTED BY SUBROUTINE MINFR (CONT)

Loc	Variable Name	Engrg Symbol	Description	Source	
				Routine	Note
120	S1(20)	Q/A	Primary longerons or stringers lateral area moment per unit area, in.^{3}/in.^{2}	I1LONG	
121	S2(1)	M	Maximum down bending moment based on moment over longeron compression yield stress, in.-lb	LDCHK	
122	S2(2)	M	Maximum up bending moment based on moment over longeron compression yield stress, in.-lb	LDCHK	
123	S2(3)	V	Maximum shear based on shear over cover ultimate shear strength, lb	LDCHK	
124	S2(4)		Maximum down force due to contents in segment forward of synthesis cut, lb	LDCHK	
125	S2(5)		Maximum up force due to contents in segment forward of synthesis cut, lb	LDCHK	
126	S2(6)		Load condition number that causes maximum down force	LDCHK	
127	S2(7)		Vehicle center of gravity to go with maximum down force, in.	LDCHK	
128	S2(8)		Limit to ultimate load factor to go with maximum down force	LDCHK	
129	S2(9)	N_Z	Vertical load factor to go with maximum down force	LDCHK	
130	S2(10)	$\dot{Q}$	Pitching acceleration to go with maximum down force, radians/sec^2	LDCHK	
131	S2(11)		Load condition number that causes maximum up force	LDCHK	
132	S2(12)		Vehicle center of gravity to go with maximum up force, in.	LDCHK	

TABLE 39. T ARRAY VARIABLES PRINTED BY SUBROUTINE MINFR (CONT)

Loc	Variable Name	Engrg Symbol	Description	Source	
				Routine	Note
133	S2(13)		Limit to ultimate load factor to go with maximum up force	LDCHK	
134	S2(14)	N_z	Vertical load factor to go with maximum up force	LDCHK	
135	S2(15)	$\dot{Q}$	Pitching acceleration to to with maximum up force, radians/sec^2	LDCHK	
136	S2(16)	V	Maximum vertical shear introduced by wing, lb	LDCHK	
137	S2(17)	V	Maximum vertical shear introduced by horizontal tail, lb	LDCHK	
138	S2(18)	M	Maximum roll moment introduced by vertical tail, in.-lb	LDCHK	
139	S2(19)	V	Maximum vertical shear introduced by nacelle, lb	LDCHK	
140	S2(20)	V	Maximum vertical shear introduced by store or other component, lb	LDCHK	
141	S3(1)	q	Shear flow, lb/in.	FCOVER	
142	S3(2)	$1-\mu^2$	1 minus Poisson's ratio squared	FCOVER	
143	S3(3)	$(1-\mu^2)^{.5}$	Square root of 1 minus Poisson's ration squared	FCOVER	
144	S3(4)	$K_S\pi^2E/b^2$	Shear resistant thickness function, lb/in.^{4}	FCOVER	
145	S3(5)	F_S	Shear stress, psi	FCOVER	
146	S3(6)	F_{SCR}	Critical buckling shear stress, psi	FCOVER	
147	S3(7)	K_S	Shear buckling coefficient	FCOVER	
148	S3(8)	b	Shear panel minimum span, in.	FCOVER	
149	S3(9)	b	Shear panel vertical distance between supports, in.	FCOVER	
150	S3(10)	t	Basic flutter thickness, in.	FCOVER	
151	S3(11)	t	Basic acoustic fatigue thickness, in.	FCOVER	

TABLE 39. T ARRAY VARIABLES PRINTED BY SUBROUTINE MINFR (CONT)

Loc	Variable Name	Engrg Symbol	Description	Source	
				Routine	Note
152	S3(12)	t	Upper panel land thickness for pressure design, in.	CVPRES	
153	S3(13)	t	Side panel land thickness for pressure design, in.	CVPRES	
154	S3(14)	t	Lower panel land thickness for pressure design, in.	CVPRES	
155	S3(15)	t	Upper panel field thickness for pressure design, in.	CVPRES	
156	S3(16)	t	Side panel field thickness for pressure design, in.	CVPRES	
157	S3(17)	t	Lower panel field thickness for pressure design, in.	CVPRES	
158	S3(18)	t	Basic acoustic fatigue field thickness, in.	FCOVER	
159	S3(19)	t	Upper panel thickness for flutter design, in.	FCOVER	
160	S3(20)	t	Lower panel thickness for flutter design, in.	FCOVER	
161	S4(1)	$A_{e_{RG}}$	Minor frame depth, in.	FUSSHL	
162	S4(2)		Minor frame effective area, $in.^2$	MINFR	3
163	S4(3)	α	Principal diagonal tension angle, radians	MINFR	3
164	S4(4)	K	Degree to which diagonal tension is developed	MINFR	3
165	S4(5)	$f_{ST\ MAX}$	Maximum forced crippling stress in longitudinal members, psi	FBEND	
166	S4(6)	P_{MAX}	Maximum forced crippling load in longitudinal members, lb	FBEND	
167	S4(7)	A	Area of longitudinal member that resists forced crippling, $in.^2$	FBEND	
168	S4(8)		Not used		
.	.		To		
180	S4(20)		Not used		
181	S5(1)		Depth of pressurized compartment, in.	BLKHDS	4

TABLE 39. T ARRAY VARIABLES PRINTED BY SUBROUTINE MINFR (CONCL)

Loc	Variable Name	Engrg Symbol	Description	Source	
				Routine	Note
182	S5(2)		Width of pressurized compartment, in.	BLKHDS	4
183	S5(3)		Limit uniform pressure, psi		
184	S5(4)		Incremental pressure due to hydraulic (fuel) head, psi	BLKHDS	4
185	S5(5)		Limit to ultimate design factor	BLKHDS	4
186	S5(6)		Limit tensile strength for bulkhead design, psi	BLKHDS	4
187	S5(7)	F_{cy}	Compression yield stress, psi	BLKHDS	4
188	S5(8)	E_c	Bulkhead material compression modulus of elasticity, psi	BLKHDS	4
189	S5(9)		Surface area of bulkhead, in^2	BLKHDS	4
190	S5(10)	$\bar{t}$	Equivalent bulkhead thickness for specified pressure loading, in.	DBLKHD	4
191	S5(11)	$\bar{t}$	Equivalent bulkhead thickness that satisfies all design loading, in.	BLKHDS	4
192	S5(12)		Fuel density, lb/in^3	BLKHDS	4
193	S5(13)		Not used		
.	.		To		
200	S5(20)		Not used		

NOTE:

1. Random data are printed which could have originated from various subroutines.

2. Random data would be printed if acoustic fatigue is not evaluated.

3. Random data would be printed if critical buckling shear stress, location 10, is greater than the side panel shear stress, location 9.

4. Data for the last previous bulkhead would appear in the printed output.

Arrays and Variables Calculated

FRWT	Refer to Table 10
S	Refer to T locations 2 through 48 in Table 39
S4	Refer to Table 36
TOT	Refer to Tables 10 and 27

Labeled Common Arrays

IP(78)	Output print control for first 200 cells of scratch region (common locations 2001 through 2200) prior to exit from MINFR

Mass Storage File Records

None

Error Messages

None

SUBROUTINE FBEND

General Description

Deck name: FBEND
Entry name: FBEND
Called by: FPANEL
Subroutines called: None

This subroutine calculates the area of the bending elements required to satisfy the strength and stiffness criteria. The routine evaluates the effects of cutouts, the contribution from cover panel bending strength, and the local forced crippling from the shear panels.

Arrays and Variables Used

BL	Refer to Table 10
BS	Refer to Table 10
BSTR	Refer to Table 10
BU	Refer to Table 10

CTOL	Refer to Table 10
CTOU	Refer to Table 10
D	Refer to Tables 10 and 12
DOO	Refer to Table 10
EISD	Refer to Table 10
EIVT	Refer to Table 10
EQUA	Refer to Table 10
FMP	Refer to Tables 10 and 15
ICST	Refer to Table 10
RCL	Refer to Table 10
RCU	Refer to Table 10
RO	Refer to Table 10
RTL	Refer to Table 10
RTU	Refer to Table 10
SFRM	Refer to Table 10
S1	Refer to Table 36
S2	Refer to Table 36
S3	Refer to Table 36
S4	Refer to Table 36
TCL	Refer to Table 10
TCS	Refer to Table 10
TCU	Refer to Table 10
WO	Refer to Table 10

Arrays and Variables Calculated

AIT	Refer to Table 10
ALCL	Refer to Table 10
ALCU	Refer to Table 10
ALL	Refer to Table 10
ALS	Refer to Table 10
ALU	Refer to Table 10
EISA	Refer to Table 10
EIVA	Refer to Table 10
FMAX	Refer to Table 10
S(2)	Area of upper longerons or stringers to satisfy strength, in.^{2}
S(3)	Area of side stringers to resist forced crippling, in.^{2}
S(4)	Area of lower longerons or stringers to satisfy strength, in.^{2}
S(5)	Secondary longeron area (minimum area), in.^{2}
S(6)	Maximum cover stress, psi
S(7)	Distance from neutral axis to shell extreme fibre, in.
S(8)	Ratio of maximum longeron or stringer stress to distance to extreme fibre, psi/in.
S(9)	Ratio of maximum cover stress to distance to extreme fibre, psi/in.

S(10)	Half of net ultimate bending moment, in.-lb
S(11)	Panel degradation due to proximity of cutout, in.
S(12)	Bending moment reacted by panel and secondary bending elements, in-lb
S(13)	Bending moment reacted by primary longerons or stringers, in.-lb
S(14)	Area of primary longerons or stringers required to react bending moment, in.^{2}
S(15)	Panel width between longerons or stringers, in.
S(16)	Available panel width located at longitudinal elements, in.
S(17)	Curvature contribution to panel compression crippling stress, psi
S(18)	Intermediate calculation
S(19)	Panel critical compression crippling stress, psi
S(20)	Effective panel width located at longitudinal elements, in.
S(21)	Bending moment reacted by panel in compression, in.-lb
S(22)	Total panel width unaffected by cutouts, in.
S(23)	Number of existing stringers on upper sector
S(24)	Number of existing stringers on side sector
S(25)	Number of existing stringers on lower sector
S(26)	Area moment of inertia of panel, in.^{4}
S(27)	Area moment of inertia of intermediate, longitudinal members, in.^{4}
S(28)	Area moment of inertia of side stringers, in.^{4}
S(29)	Area moment of inertia of upper cutout longerons, in.^{4}
S(30)	Area moment of inertia of lower cutout longerons, in.^{4}
S(31)	Area moment of inertia of upper longerons or stringers, in.^{4}
S(32)	Area moment of inertia of lower longerons or stringers, in.^{4}
S(33)	Incremental bending stiffness required, lb-in.^{2}
S(34)	Incremental area for upper longeron or stringers, in.^{2}
S(35)	Incremental area for lower longeron or stringers, in.^{2}
S(36)	Vertical distance from neutral axis to upper cutout longerons, in.
S(37)	Vertical distance from neutral axis to lower cutout longerons, in.
S(38)	Area of upper cutout longeron (intermediate calculation), in.^{2}
S(39)	Area of lower cutout longeron (intermediate calculation), in.^{2}
S(40)	Area per unit thickness for upper longerons or side stringers, in.^{2}/in.
S(41)	Distance from cover to longeron or stringer centroid, in.
S(42)	Longeron or stringer area moment of inertia per unit thickness, in.^{4}/in.
S(43)	Longeron or stringer radius of gyration, in.
S(44)	Initial thickness, estimate for longeron or stringer, in.
S(45)	Longeron or stringer thickness required to resist induced compression load from shear panel, in.

S(46)	Longeron or stringer effective area constant
S(47)	Intermediate calculation
S(48)	Intermediate calculation
S(51)	Intermediate calculation
S(52)	Ratio of average induced stringer or longeron stress to maximum stress
S(53)	Intermediate calculation
S(54)	Intermediate calculation or longeron compression load due to bending moment, lb
S(55)	Intermediate calculation or longeron area required for combined bending load and forced crippling load, in.^{2}
S(56)	Longeron or stringer estimated thickness, in., or longeron compression load due to combined bending and forced crippling, lb
S(57)	Intermediate calculation or longeron area required for combined bending and forced crippling, in.^{2}
S(58)	Intermediate calculation
S(59)	Intermediate calculation
S(60)	Intermediate calculation
S(61)	Difference between assumed longeron or stringer thickness and iterated thickness, in.
S(62)	Lateral distance to upper cutout longeron, in.
S(63)	Lateral distance to lower cutout longeron, in., or upper cutout width, in.
S(64)	Lower cutout width, in.
S4	Refer to Table 36
TOT	Refer to Tables 10 and 27

Labeled Common Arrays

None

Mass Storage File Records

None

Error Messages

None

SUBROUTINE BLKHDS

General Description

Deck name: BLKHDS
Entry name: BLKHDS
Called by: FUSSHL
Subroutines called: DBLKHD

This subroutine evaluates the pressure and geometry data to obtain the bulkhead design parameters, calls subroutine DBLKHD to obtain the equivalent thickness of webs and stiffeners, and calculates the bulkhead weight.

The routine evaluates cabin, compartment, or fuel pressures, both forward and aft of the designated bulkhead. Should none of the pressure loadings be indicated, the bulkhead weight is based on minimum equivalent thickness. Should pressure from different sources or conditions affect the bulkheads, each pressure loading is evaluated to determine the critical design.

Cabin pressure is indicated by negative pressure input data. Should an upper cutout exist in this situation, the torsional area calculated in subroutine CUTOUT reflects the lower section area and, therefore, the upper section area is calculated for use in the bulkhead calculations. The factor-of-safety and design pressures are calculated in the same manner as discussed for subroutine CVPRES for cover design.

Arrays and Variables Used

ACRS	Refer to Table 10
ANTA	Refer to Table 10
ANTF	Refer to Table 10
CIND	Refer to Tables 10 and 11
CTOU	Refer to Table 10
D	Refer to Tables 10 and 12
DEPA	Refer to Table 10
DEPF	Refer to Table 10
DKHT	Refer to Table 10
FMP	Refer to Tables 10 and 15
PERA	Refer to Table 10
PERF	Refer to Table 10
PRDA	Refer to Table 10
PRDF	Refer to Table 10
PRES	Refer to Table 10
RHOF	Refer to Table 10

S1	Refer to Table 36
S2	Refer to Table 36
S5(10)	Equivalent thickness for specified pressure loading, in.
WIDA	Refer to Table 10
WIDF	Refer to Table 10
XO	Refer to Table 10

Arrays and Variables Calculated

S(1)	Limit allowable stress for strength, psi
S(2)	Vertical load factor or bulkhead peripheral edge length, in.
S5(1)	Depth of pressurized compartment, in.
S5(2)	Width of pressurized compartment, in.
S5(3)	Limit uniform pressure, psi
S5(4)	Incremental pressure due to hydraulic (fuel) head, psi
S5(5)	Limit to ultimate design factor
S5(6)	Limit tensile strength for design, psi
S5(7)	Compression yield strength, psi
S5(8)	Compression modulus of elasticity, psi
S5(9)	Surface area of bulkhead, $in.^2$
S5(11)	Equivalent thickness that satisfies all design loadings, in.
S5(12)	Fuel density, $lb/in.^3$
WTBK	Refer to Table 10

Labeled Common Arrays

None

Mass Storage File Records

None

Error Messages

None

SUBROUTINE DBLKHD

General Description

Deck name: DBLKHD
Entry name: DBLKHD
Called by: BLKHDS, SECOST
Subroutines called: MINMUM

This subroutine calculates the equivalent thickness (t-bar) of a conventional stiffened sheet structure designed to resist normal pressure loadings.

The equivalent thickness is calculated for three stiffener spacings, starting at a predefined minimum spacing and progressively increasing at fixed increments. The bulkhead web thickness is calculated to resist the maximum pressure force in a combined beaming and diaphragming action between stiffeners. The web is assumed to be milled with lands 10 percent wider than the stiffener caps. The relationship of land and field thickness is restricted such that the ratio of land thickness over field thickness does not exceed 2.5. The stiffener sizing is calculated to react the maximum bending moment, as well as to satisfy the geometric restraints of minimum thickness, minimum flange width, and maximum stiffener height.

After the equivalent thicknesses have been calculated for three spacings (J=3), subroutine MINMUM is called to determine the optimum spacing. The solution for optimum spacing is defined by the indicator K.

If K is 1, an optimum spacing has been determined, and a final effective thickness is calculated for that spacing.

If K is 2, the optimum spacing is greater than the third spacing. The equivalent thicknesses and spacings at points 2 and 3 replace the values at spacings 1 and 2, and a new third spacing is evaluated. If the maximum stiffener spacing is reached, the thickness at that spacing is used.

If K is 3, the optimum spacing occurs at a spacing less than the minimum, and the thickness derived for the minimum spacing is used.

Arrays and Variables Used

D	Refer to Tables 10 and 12
EQUA	Refer to Tables 10 and 13
S(4)	Optimum stiffener spacing, in.
S5(1)	Depth of pressurized compartment, in.
S5(2)	Width of pressurized compartment, in.

S5(3)	Limit uniform pressure, psi
S5(4)	Incremental pressure due to hydraulic head, psi
S5(5)	Limit to ultimate design factor
S5(6)	Limit tensile strength for design, psi
S5(7)	Compression yield strength, psi
S5(8)	Compression modulus of elasticity, psi

Arrays and Variables Calculated

S	Intermediate calculations and as follows:
S(1)	First stiffener spacing, in.
S(2)	Second stiffener spacing, in.
S(3)	Third stiffener spacing, in.
S(4)	Optimum stiffener spacing, in.
S(5)	Equivalent thickness at first spacing, in.
S(6)	Equivalent thickness at second spacing, in.
S(7)	Equivalent thickness at third spacing, in.
S(8)	Equivalent thickness at optimum spacing, in.
S(31)	Ultimate uniform pressure, psi
S(32)	Ultimate pressure from hydraulic head, psi
S(37)	Shortest beaming distance between edges of bulkhead, in.
S(39)	Maximum ultimate pressure, psi
S(40)	Bulkhead web field thickness, in.
S(46)	Equivalent stiffener thickness, in.
S(51)	Bulkhead web land thickness, in.
S(54)	Stiffener web thickness, in.
S(55)	Stiffener flange width, in.
S5(10)	Equivalent thickness of bulkhead, in.

Labeled Common Arrays

None

Mass Storage File Records

None

Error Messages

None

SUBROUTINE MINMUM

General Description

Deck name: MINMUM
Entry name: MINMUM
Called by: DBLKHD
Subroutines called: None

This subroutine calculates the optimum spacing when given three spacings and corresponding thickness values. The method consists of a quadratic equation fit through the three given points and evaluating the curve for the optimum spacing. The quadratic equation takes the following form:

$$y = ax^2 - bx + c$$

where

$$y = \text{thickness}$$

$$x = \text{spacing}$$

Should "a" be negative, the point at which the slope is zero represents a maximum thickness. Therefore, the indicator K is set to 3 to indicate an optimum spacing less than the spacings given.

Should "a" be zero, the curve fit is a straight line with no real maximum or minimum. If "b" is also zero, thickness does not vary with spacing, and the indicator K is set to 3. If "b" is negative, the thickness increases with spacing and, therefore, the indicator K is set to 3. If "b" is positive, the thickness decreases with spacing and the indicator is set to 2 to designate an optimum spacing greater than any of the spacings given.

Should "a" be positive, there is a real optimum. Should the optimum occur within the range of the given spacings, the indicator K is set to 1 to designate a solution. If the optimum is greater than the given spacings, K is set equal to 2. If the optimum is less than the given spacings, K is set at 3.

Arrays and Variables Used

D	Refer to Tables 10 and 12
S(1)	First spacing, in.
S(2)	Second spacing, in.
S(3)	Third spacing, in.
S(5)	Thickness at first spacing, in.
S(6)	Thickness at second spacing, in.
S(7)	Thickness at third spacing, in.

Arrays and Variables Calculated

S	Intermediate calculations and as follows:
S(4)	Optimum spacing, in.
S(8)	Thickness at optimum spacing, in.
S(19)	Constant "a" in equation
S(20)	Constant "b" in equation
S(21)	Constant "c" in equation
S(22)	Spacing at which slope of the curve is zero (optimum), in.

Labeled Common Arrays

None

Mass Storage File Records

None

Error Messages

None

SUBROUTINE FWEIGH

General Description

Deck name: FWEIGH
Entry name: FWEIGH
Called by: FUSSHL
Subroutines called: None

This subroutine calculates the weight and center of gravity of cover, minor frames, longerons or stringers, secondary longerons, and joints, splices, and fasteners within each of the fuselage segments.

The cover and longitudinal member weight calculations are based on linear taper of thickness or area between the forward and aft boundaries of the segment. Minor frame weights are based on a weight per linear inch. Upper and lower panel cutouts are examined. If a cutout occurs within a segment, that portion of cover that is cut out is deleted from the weight calculations. For stringer construction, only the stringers present enter into the volumetric calculations. Should cutouts exist in the side sector of the segment, a weight increment equal to four times the cover material removed by the cutout is added to the cover weight calculations.

Should torsional stiffness requirements dictate the cover thickness, the required thickness may have two values immediately aft and forward of a cut. The appropriate thicknesses that apply to the segment are used.

The weights of the structural elements in the nose and tail segments of the fuselage are based on the sizing data at the first and last structural evaluation cuts. Should either or both nose and tail radomes exist, the shell estimate for the corresponding segment is not calculated, to avoid any weight duplication.

The weights of joints splices and fasteners are based on a fraction of the cover and longitudinal member weights.

Arrays and Variables Used

AIT	Refer to Table 10
ALCL	Refer to Table 10
ALCU	Refer to Table 10
ALL	Refer to Table 10
ALS	Refer to Table 10
ALU	Refer to Table 10
BL	Refer to Table 10
BS	Refer to Table 10
BSTR	Refer to Table 10
BU	Refer to Table 10
CIND	Refer to Tables 10 and 11
CTOL	Refer to Table 10
CTOS	Refer to Table 10
CTOU	Refer to Table 10
D	Refer to Tables 10 and 12
DELX	Refer to Table 10

EQUA	Refer to Tables 10 and 13
FMP	Refer to Tables 10 and 15
FRWT	Refer to Table 10
ICST	Refer to Table 10
NC	Refer to Table 10
PER	Refer to Table 10
RDNS	Refer to Table 10
RDTC	Refer to Table 10
SF	Refer to Table 10
SFRM	Refer to Table 10
S1	Refer to Table 36
TCL	Refer to Table 10
TCS	Refer to Table 10
TCU	Refer to Table 10
TGJA	Refer to Table 10
TGJF	Refer to Table 10
TLL	Refer to Table 10
TLS	Refer to Table 10
TLU	Refer to Table 10
XBAR	Refer to Table 10
XO	Refer to Table 10

Arrays and Variables Calculated

CGCO	Refer to Table 10
CGJS	Refer to Table 10
CGLG	Refer to Table 10
CGMF	Refer to Table 10
S(1)	Equivalent perimeter of nose or tail segments, in.
S(2)	Perimeter correction factor for nose or tail segments
S(3)	Number of upper longerons or stringers for nose, tail, or sharp geometric transition segments
S(4)	Number of side stringers for nose, tail, or sharp geometric transition segments
S(5)	Number of lower longerons or stringers for nose, tail, or sharp geometric transition segments
S(6)	Frame land volume in upper sector for nose or tail segments, in.^{3}
S(7)	Intermediate calculations
S(8)	Intermediate calculations
S(9)	Intermediate calculations
S(10)	Intermediate calculations
S(11)	Intermediate calculations
S(12)	Intermediate calculations
S(13)	Number of stringers in side sector at forward edge of segment

S(14)	Number of stringers in side sector at aft edge of segment
S(15)	Volume per linear inch of cover panel at forward edge of segment, $in.^3/in.$
S(16)	Volume per linear inch of cover panel at aft edge of segment, $in.^3/in.$
S(17)	Volume per linear inch of longerons or stringers at forward edge of segment, $in.^3/in.$
S(18)	Volume per linear inch of longerons or stringers at edge of segment, $in.^3/in.$
S(19)	Minor frame weight per linear inch at forward edge of segment, lb/in.
S(20)	Minor frame weight per linear inch at aft edge of segment, lb/in.
S(21)	Upper cover longitudinal center of gravity, in.
S(22)	Side cover longitudinal center of gravity, in.
S(23)	Lower cover longitudinal center of gravity, in.
S(24)	Cover field thickness at forward edge of segment, in.
S(25)	Cover land thickness at forward edge of segment, in.
S(26)	Cover field thickness at aft edge of segment, in.
S(27)	Cover land thickness at aft edge of segment, in.
S(31)	Upper longerons or stringers longitudinal center of gravity, in.
S(32)	Side stringers longitudinal center of gravity, in.
S(33)	Lower longerons or stringers longitudinal center of gravity, in.
S(34)	Secondary longerons longitudinal center of gravity, in.
S(35)	Upper cutout longerons longitudinal center of gravity, in.
S(36)	Lower cutout longerons longitudinal center of gravity, in.
S(40)	Weight moment of cover or longitudinal elements, in.-lb
WLCL	Refer to Table 10
WLCU	Refer to Table 10
WTCL	Refer to Table 10
WTCS	Refer to Table 10
WTCT	Refer to Table 10
WTCU	Refer to Table 10
WTJS	Refer to Table 10
WTLL	Refer to Table 10
WTLS	Refer to Table 10
WTLT	Refer to Table 10
WTLU	Refer to Table 10
WTMF	Refer to Table 10
WTST	Refer to Table 10

Labeled Common Arrays

None

Mass Storage File Records

None

Error Messages

None

SUBROUTINE PARTIT

General Description

Deck name: PARTIT
Entry name: PARTIT
Called by: FUSSHL
Subroutines called: None

This subroutine calculates the weight of partitions based on a fraction of the cover and minor frame weights. Program capability improvement would result in a revision to this routine. In the improved version, this routine would control the detail required for the structural evaluation of partitions.

Arrays and Variables Used

EQUA	Refer to Tables 10 and 13
NC	Refer to Table 10
WTCT	Refer to Table 10
WTMF	Refer to Table 10

Arrays and Variables Calculated

WTPT	Refer to Table 10

Labeled Common Arrays

None

Mass Storage File Records

None

Error Messages

None

SUBROUTINE MISCWT

General Description

Deck name: MISCWT
Entry name: MISCWT
Called by: FUSSHL
Subroutines called: None

This subroutine calculates the weight and center of gravity of fittings, engine drag beams, and certain major frames which are not evaluated in the shell, bulkhead, or major frame calculations.

The routine calculates the weight of attach fittings for the wing, horizontal tail, vertical tail, nacelle, and other component reaction loads. The maximum shear forces from the wing, horizontal tail, nacelle, and other externally supported component are used to calculate the respective fitting weights. The maximum bending moment from the vertical tail is divided by the couple arm (maximum root thickness) to obtain the vertical tail fitting load. The fitting center of gravity is determined by the centroid of the support points.

The engine drag beam weight reflects the amount of material required to redistribute the engine thrust loads in the fuselage shell. The center of gravity for this item is located at one-fourth the engine length from the front face.

Fighter and bomber aircraft require crew ejection provisions. On these types of aircraft, the weight of rail support frames for seat ejection is based on 20 pounds per crewmember. The center of gravity of this provision is located 20 inches aft of the crew center of gravity.

Cargo aircraft with wheeled vehicle loading ramps require a support frame at the ramp hinge. This is due to the local loads that occur during cargo loading. The weight for these frames is based on the fuselage perimeter at the frame. This frame is located either at the ramp center of gravity or, if ramp length is defined, at a distance equal to one-third the ramp length from the ramp center of gravity in the direction of the hinge.

Arrays and Variables Used

D	Refer to Tables 10 and 12
EQUA	Refer to Tables 10 and 13
FMWT	Refer to Tables 10 and 16
ITYP	Refer to Table 10
NC	Refer to Table 10
PER	Refer to Table 10
SCDT	Refer to Tables 10 and 17
SCST	Refer to Tables 10 and 18
S2	Refer to Table 36
S21	Refer to Table 21
TMS	Refer to Tables 10 and 26
XHFS	Refer to Table 10
XHRS	Refer to Table 10
XNFS	Refer to Table 10
XNRS	Refer to Table 10
XO	Refer to Table 10
XOFS	Refer to Table 10
XORS	Refer to Table 10
XVFS	Refer to Table 10
XVRS	Refer to Table 10
XWFS	Refer to Table 10
XWIS	Refer to Table 10
XWRS	Refer to Table 10

Arrays and Variables Calculated

FMWT	Refer to Tables 10 and 16
S(1)	Intermediate calculation
S(2)	Intermediate calculation
S(3)	Intermediate calculation
S(4)	Weight of wing attach fittings, lb
S(5)	Longitudinal center of gravity of wing attach fittings, in.
S(6)	Weight of horizontal tail attach fittings, lb
S(7)	Longitudinal center of gravity of horizontal tail attach fittings, in.
S(8)	Weight of vertical tail attach fittings, lb
S(9)	Longitudinal center of gravity of vertical tail attach fittings, in.
S(10)	Weight of nacelle attach fittings, lb
S(11)	Longitudinal center of gravity of nacelle attach fittings, in.
S(12)	Weight of other component attach fittings, lb
S(13)	Longitudinal center of gravity of other component attach fittings, in.
S(14)	Fuselage perimeter at ramp support frame, in.

SUMM	Refer to Tables 10 and 20
S21	Refer to Tables 10 and 21

Labeled Common Arrays

None

Mass Storage File Records

None

Error Messages

None

SUBROUTINE SECOST

General Description

Deck name: SECOST
Entry name: SECOST
Called by: FUSSHL
Subroutines called: DBLKHD

This subroutine tests for applicable items of secondary structure, and calculates the weights that are not supplied in the input data. These weights, either calculated or input, are saved in the SCWT array. The routine also calculates the weight of cargo or passenger flooring which falls in the category of primary structure.

Arrays and Variables Used

CIND	Refer to Tables 10 and 11
D	Refer to Tables 10 and 12
EQUA	Refer to Tables 10 and 13
FMP	Refer to Tables 10 and 15
IAV	Refer to Table 10
ITYP	Refer to Table 10
NC	Refer to Table 10
SCDT	Refer to Tables 10 and 17

SCST	Refer to Tables 10 and 18
SF	Refer to Table 10
S21	Refer to Tables 10 and 21
S5(10)	Equivalent thickness of door, in.
TOT	Refer to Tables 10 and 27
XI	Refer to Table 10

Arrays and Variables Calculated

S	Intermediate calculations
SCDT	Refer to Tables 10 and 17
SCWT	Refer to Tables 10 and 19
S5(1)	Depth of pressure door, in.
S5(2)	Width of pressure door, in.
S5(3)	Limit uniform pressure, psi
S5(4)	Incremental pressure due to hydraulic head (0.0), psi
S5(5)	Limit to ultimate design factor
S5(6)	Limit tensile strength for design, psi
S5(7)	Compression yield strength, psi
S5(8)	Compression modulus of elasticity, psi

Labeled Common Arrays

None

Mass Storage File Records

None

Error Messages

- ***WARNING MESSAGE***

  WINDOWS AND PORTS RULE OF THUMB IS NOT WITHIN PROGRAM CAPACITY

Data must be supplied for windows and ports, either weights or descriptive data.

SUBROUTINE WTDIST

General Description

Deck name: WTDIST
Entry name: WTDIST
Called by: FUSSHL
Subroutines called: None

This subroutine is currently a dummy routine that would be written to distribute the fuselage component weights.

SUBROUTINE SUMMRY

General Description

Deck name: SUMMRY
Entry name: SUMMRY
Called by: FUSSHL
Subroutines called: None

This subroutine combines the component weight and balance data for summary output print. The routine locates the longitudinal elements according to type of construction for the detail weight statement output.

Arrays and Variables Used

CGCO	Refer to Table 10
CGJS	Refer to Table 10
CGLG	Refer to Table 10
CGMF	Refer to Table 10
D	Refer to Tables 10 and 12
FMWT	Refer to Tables 10 and 16
ICST	Refer to Table 10
NC	Refer to Table 10
SCST	Refer to Tables 10 and 18
SCWT	Refer to Tables 10 and 19
SUMM	Refer to Tables 10 and 20
WLCL	Refer to Table 10
WLCU	Refer to Table 10
WTBK	Refer to Table 10
WTCL	Refer to Table 10
WTCS	Refer to Table 10
WTCU	Refer to Table 10

WTJS	Refer to Table 10
WTLL	Refer to Table 10
WTLS	Refer to Table 10
WTLU	Refer to Table 10
WTMF	Refer to Table 10
WTPT	Refer to Table 10
WTST	Refer to Table 10
XBAR	Refer to Table 10
XO	Refer to Table 10

Arrays and Variables Calculated

S	S array variable calculations in this array are weight moments, in.-lb
SUMM	Refer to Tables 10 and 20

Labeled Common Arrays

None

Mass Storage File Records

None

Error Messages

None

SUBROUTINE SPRINT

General Description

Deck name: SPRINT
Entry name: SPRINT
Called by: FUSSHL
Subroutines called: None

This is the primary output print routine for the fuselage weight estimation module. This routine prints the significant input data, final structural sizing data, detail element weight data, a detail weight statement, and fuselage balance summary in tabular form.

Arrays and Variables Used

ACOU	Refer to Table 10
ACRS	Refer to Table 10
AIT	Refer to Table 10
ALCL	Refer to Table 10
ALCU	Refer to Table 10
ALL	Refer to Table 10
ALS	Refer to Table 10
ALU	Refer to Table 10
ANTA	Refer to Table 10
ANTF	Refer to Table 10
BL	Refer to Table 10
BLKD	Refer to Table 10
BMN	Refer to Table 10
BS	Refer to Table 10
BSTR	Refer to Table 10
BU	Refer to Table 10
CIND	Refer to Tables 10 and 11
CTOL	Refer to Table 10
CTOS	Refer to Table 10
CTOU	Refer to Table 10
DELX	Refer to Table 10
DEPA	Refer to Table 10
DEPF	Refer to Table 10
DKHT	Refer to Table 10
DOO	Refer to Table 10
EISA	Refer to Table 10
EISD	Refer to Table 10
EIVA	Refer to Table 10
EIVT	Refer to Table 10
FMP	Refer to Tables 10 and 15
FMWT	Refer to Tables 10 and 16
FRMC	Refer to Table 10
FRML	Refer to Table 10
GJRD	Refer to Table 10
HTLG	Refer to Table 10
IP	Print control (refer to "Labeled Common Arrays")
I1	Condition which produces maximum down-bending moment
I2	Condition which produces maximum up-bending moment
I3	Condition which produces design vertical shear
NC	Refer to Table 10
PER	Refer to Table 10
PERA	Refer to Table 10
PERF	Refer to Table 10
PRDA	Refer to Table 10
PRDF	Refer to Table 10
PRES	Refer to Table 10

RAD	Refer to Table 10
RCL	Refer to Table 10
RCS	Refer to Table 10
RCU	Refer to Table 10
RHOF	Refer to Table 10
RO	Refer to Table 10
RTL	Refer to Table 10
RTU	Refer to Table 10
SCDT	Refer to Tables 10 and 17
SCST	Refer to Tables 10 and 18
SCWT	Refer to Tables 10 and 19
SF	Refer to Table 10
SFRM	Refer to Table 10
STNO	Refer to Table 10
SUMM	Refer to Tables 10 and 20
S21	Refer to Tables 10 and 21
TCF	Refer to Table 10
TCL	Refer to Table 10
TCS	Refer to Table 10
TCU	Refer to Table 10
TGJA	Refer to Table 10
TGJF	Refer to Table 10
TLL	Refer to Table 10
TLS	Refer to Table 10
TLU	Refer to Table 10
TOT	Refer to Tables 10 and 27
UIX	Refer to Table 10
UIY	Refer to Table 10
UIZ	Refer to Table 10
VOL	Refer to Table 10
WIDA	Refer to Table 10
WIDF	Refer to Table 10
WLCL	Refer to Table 10
WLCU	Refer to Table 10
WO	Refer to Table 10
WTBK	Refer to Table 10
WTCL	Refer to Table 10
WTCS	Refer to Table 10
WTCT	Refer to Table 10
WTCU	Refer to Table 10
WTJS	Refer to Table 10
WTLL	Refer to Table 10
WTLS	Refer to Table 10
WTLT	Refer to Table 10
WTLU	Refer to Table 10
WTMF	Refer to Table 10

WTPT	Refer to Table 10
WTST	Refer to Table 10
XBAR	Refer to Table 10
XO	Refer to Table 10
ZO	Refer to Table 10

Arrays and Variables Calculated

T(1)	Intermediate calculation for weight items, lb

Labeled Common Arrays

IP(80)	Output print control for input data, detail sizing data, and detail shell element weights in tabular form

Mass Storage File Records

None

Error Messages

None

REFERENCES

1. Bruhn, E.F., Analysis and Design of Flight Vehicle Structures, Tri State Offset Company, Ohio, 1965

2. Roark, Raymond J., Formulas for Stress and Strain, McGraw-Hill New York, 1954

3. Shanley, F.R., Weight-Strength Analysis of Aircraft Structures, McGraw-Hill, New York, 1952

4. Kuhn, Paul, and Griffith, George E., Diagonal Tension in Curved Webs, NACA TN No. 1481, Washington, 1947

5. Peery, David J., Aircraft Structures, McGraw-Hill, New York, 1950

6. Lemley, C.E., Design Criteria for Prediction and Prevention of Panel Flutter, Volume I, AFFDL-TR-67-140, Air Force Flight Dynamics Laboratory, 1968

7. Douglas Aircraft Company, Structural Design for Acoustic Fatigue, ASD-TDR-63-820, Air Force Flight Dynamics Laboratory, 1963

8. Fitch, G.E., et al, Establishment of the Approach to, and Development of, Interim Design Criteria for Sonic Fatigue, ASD-TDR-62-26, Air Force Flight Dynamics Laboratory, 1962

9. Kangas, P., and Pigman, G.L., Development of Aircraft Windshields to Resist Impact with Birds in Flight, Technical Development Report No. 74, Civil Aeronautics Administration, Indiana, 1950

10. Schnakenburg, E.O., NA-66-1364, Workbook on AMSA Program, Rockwell International, Los Angeles, Calif.

11. AFSC Design Handbook Series 2-0, Aeronautical Systems Division, Wright-Patterson AFB, Ohio