AD/A-002 855

# A STRUCTURAL WEIGHT ESTIMATION PROGRAM (SWEEP) FOR AIRCRAFT. VOLUME III - AIRLOADS ESTIMATION MODULE. APPENDIX A: MODULE FLOW CHARTS AND FORTRAN LISTS. APPENDIX B: SAMPLE OUTPUT

P. Wildermuth, et al

Rockwell International Corporation

Prepared for:

Aeronautical Systems Division

June 1974

DISTRIBUTED BY:

NTIS

National Technical Information Service
U. S. DEPARTMENT OF COMMERCE

Best
Available
Copy

SECURITY CLASSIFICATION OF THIS PAGE (When Data Entered)

AD/A002-855

# REPORT DOCUMENTATION PAGE

READ INSTRUCTIONS BEFORE COMPLETING FORM

1. REPORT NUMBER: ASD/XR 74-10

2. GOVT ACCESSION NO.

3. RECIPIENT'S CATALOG NUMBER

4. TITLE (and Subtitle): A Structural Weight Estimation Program (SWEEP) for Aircraft
Volume III - Airloads Estimation Module

5. TYPE OF REPORT & PERIOD COVERED

6. PERFORMING ORG. REPORT NUMBER

7. AUTHOR(s): P. Wildermuth, G. Rothammer, R. Hiyama

8. CONTRACT OR GRANT NUMBER(s): F33615-71-C-1922

9. PERFORMING ORGANIZATION NAME AND ADDRESS:
Rockwell International Corp, L.A. Aircraft Div
Los Angeles International Airport
Los Angeles, California 90009

10. PROGRAM ELEMENT, PROJECT, TASK AREA & WORK UNIT NUMBERS: FX2826-71-01876/C093

11. CONTROLLING OFFICE NAME AND ADDRESS:
Deputy for Development Planning
Air Force Systems Command
Wright-Patterson Air Force Base, Ohio

12. REPORT DATE: June 1974

13. NUMBER OF PAGES: 464

14. MONITORING AGENCY NAME & ADDRESS (if different from Controlling Office)

15. SECURITY CLASS. (of this report): Unclassified

15a. DECLASSIFICATION/DOWNGRADING SCHEDULE

16. DISTRIBUTION STATEMENT (of this Report)

Approved for public release; distribution unlimited.

17. DISTRIBUTION STATEMENT (of the abstract entered in Block 20, if different from Report)

18. SUPPLEMENTARY NOTES

Reproduced by
NATIONAL TECHNICAL
INFORMATION SERVICE
U.S. Department of Commerce
Springfield, VA. 22151

19. KEY WORDS (Continue on reverse side if necessary and identify by block number)
weight estimation, structural weights, integrated computer programs, preliminary weight estimation, first-order weight estimations, aircraft structure weights, aircraft structural weight optimization, flutter optimization program, structural synthesis

20. ABSTRACT (Continue on reverse side if necessary and identify by block number)

Three computer programs were written with the objective of predicting the structural weight of aircraft through analytical methods. The first program, the structural weight estimation program (SWEEP), is a completely integrated program including routines for airloads, loads spectra, skin temperatures, material properties, flutter stiffness requirements, fatigue life, structural sizing, and for weight estimation of each of the major aircraft structural components. The program produces first-order weight estimates

DD FORM 1 JAN 73 1473 EDITION OF 1 NOV 65 IS OBSOLETE

SECURITY CLASSIFICATION OF THIS PAGE (When Data Entered)

and indicates trends when parameters are varied. Fighters, bombers, and cargo aircraft can be analyzed by the program. The program operates within 100,000 octal units on the Control Data Corporation 6600 computer. Two stand-alone programs operating within 100,000 octal units were also developed to provide optional data sources for SWEEP. These include (1) the flexible airloads program to assess the effects of flexibility on lifting surface airloads, and (2) the flutter optimization program to optimize the stiffness distribution required for lifting surface flutter prevention.

The final report is composed of 11 volumes. This volume (Volume III) contains the methodology, program description, and user's information for the airload module of SWEEP.

ACCESSION for
NTIS White Section
DDC Buff Section
UNANNOUNCED
JUSTIFICATION
BY
DISTRIBUTION/AVAILABILITY CODES
Dist. SPECIAL
A

# NOTICES

When Government drawings, specifications, or other data are used for any purpose other than in connection with a definitely related Government procurement operation, the United States Government thereby incurs no responsibility nor any obligation whatsoever; and the fact that the Government may have formulated, furnished or in any way supplied the said drawings, specifications, or other data is not to be regarded by implication or otherwise as in any manner licensing the holder or any other person or corporation, or conveying any rights or permission to manufacture, use, or sell any patented invention that may in any way be related thereto.

Publication of this technical report does not constitute Air Force approval of the report's findings or conclusions. It is published only for the exchange and stimulation of ideas.

JAMES H. HALL, Colonel, USAF
Deputy for Development Planning

TABLE OF CONTENTS


| Section | | Page |
|---|---|---|
| I | INTRODUCTION AND SUMMARY | 10 |
| | Summary of Capabilities | 10 |
| | Module Structure and Operation | 11 |
| II | METHODS AND FORMULATIONS | 12 |
| | Airload Computing Module Functions | 12 |
| | Basic Flight Conditions | 15 |
| | Determination of Lifting Surface Unit Airloads | 17 |
| | Unit Airload Shear | 17 |
| | Unit Airload Bending Moment | 18 |
| | Unit Airload Torsional Moment | 18 |
| | Conversion to Dimensional Values | 19 |
| | Basic Data for Unit Airload Determination | 20 |
| | Lifting Surface Aerodynamic Data | 20 |
| | Lifting Surface Geometry | 33 |
| | Wing and Horizontal Tail Unit Airload Determination | 33 |
| | Unit Airload Shear Due to Angle of Attack, Subsonic | 33 |
| | Unit Airload Shear Due to Angle of Attack, Supersonic | 37 |
| | Unit Airload Due to Wing Flap Deflection | 38 |
| | Unit Airload Bending Moments | 40 |
| | Unit Airload Torsional Moments | 40 |
| | Gross Surface Unit Airloads | 42 |
| | Gross Surface Centers of Pressure | 44 |
| | Vertical Tail Unit Airload Distributions | 45 |
| | Conventional (Non-T-Type) Vertical Tail Unit Airloads | 45 |
| | T-Type Vertical Tail Unit Airloads | 46 |
| | Gross Surface Unit Airloads and Centers of Pressure | 47 |

| Section | | Page |
|---|---|---|


| | | |
|---|---|---|
| | Determination of Limit Airloads on Components | 48 |
| | Balanced Maneuver Condition | 48 |
| | Pitching Acceleration Condition | 53 |
| | Vertical Gust Condition | 55 |
| | Lateral Gust Condition | 59 |
| | Yawing Acceleration Condition | 60 |
| | Determination of Lifting Surface Limit Airload Shears and Moments | 61 |
| | Wing Limit Airload Shears and Moments | 61 |
| | Horizontal Tail (or Canard) Limit Airload Shears and Moments | 62 |
| | Vertical Tail Limit Airload Shears and Moments | 63 |
| | Determination of Lifting Surface Design Loads | 65 |
| | Net Loads | 66 |
| | Determination of Wing Bending Moment Spectra | 71 |
| | Blocked Usage Flight Segments | 71 |
| | Maneuver Load Factor Spectra | 73 |
| | Gust Load Factor Spectra | 78 |
| | Taxi Load Factor Spectra | 80 |
| | Ground-Air-Ground Cycle Load Factor Spectrum | 81 |
| | Wing Bending Moment Spectra | 81 |
| III | PROGRAM DESCRIPTION | 88 |
| | General Description | 88 |
| | Program Functions | 88 |
| | General Maps | 90 |
| | Common | 93 |
| | Labeled Common | 93 |
| | Mass Storage Files | 93 |

| Section | | Page |
|---|---|---|
| | Subroutine Descriptions | 206 |
| | Program BLCNTL | 206 |
| | Subroutine USPAN | 218 |
| | Subroutine BNLDS | 226 |
| | Subroutine SPABM | 231 |
| | Subroutine MAXLDS | 234 |
| | Subroutine WHVNET | 239 |
| | Subroutine FUSNET | 248 |
| | Subroutine FATMG | 253 |
| | Subroutine ATMOS | 270 |
| | Function CODIM2 | 272 |
| | Function FCODM2 | 274 |
| IV | REFERENCES | 276 |
| APPENDIX A | MODULE FLOW CHARTS AND FORTRAN LISTS | 286 |
| | Flow Chart Usage | 286 |
| | Module Table of Contents and References | 290 |
| | Module Flow Charts | 305 |
| | BLCNTL | 306 |
| | ATMOS | 319 |
| | BNLDS | 322 |
| | CODIM2 | 329 |
| | FATMG | 334 |
| | FCODM2 | 344 |
| | FUSNET | 348 |
| | MAXLDS | 353 |
| | SPABM | 368 |
| | USPAN | 373 |
| | WHVNET | 389 |
| | Module FORTRAN lists | 399 |
| | BLCNTL | 400 |
| | ATMOS | 406 |
| | BNLDS | 407 |
| | CODIM2 | 410 |
| | FATMG | 411 |
| | FCODM2 | 415 |
| | FUSNET | 416 |
| | MAXLDS | 417 |
| | SPABM | 424 |
| | USPAN | 426 |
| | WHVNET | 433 |
| APPENDIX B | SAMPLE OUTPUT | 439 |

## LIST OF ILLUSTRATIONS


| Figure | Title | Page |
|---|---|---|
| 1 | Wing or Horizontal Tail Lifting Surface Geometry . . . . . | 13 |
| 2 | Vertical Tail Lifting Surface Geometry . . . . . | 14 |
| 3 | Speed Altitude Points and Flight Conditions . . . . . | 16 |
| 4 | Variation of Section Lift Curve Slope Correction Factor, B/K, with Mach Number . . . . . | 31 |
| 5 | Variation of Section Center of Pressure, X/C, with Mach Number for Wing and Empennage . . . . . | 32 |
| 6 | Variation of Flap Lift Effectiveness, $K_{CF}$, and Flap Lift Center of Pressure, $(X/C)_F$, with Flap Chord Ratio, $C_F/C_W$ . . . . . | 34 |
| 7 | Flow of Airload Module Dependent Data . . . . . | 89 |
| 8 | Calling-Called Matrix for Airload Module . . . . . | 91 |
| 9 | Logical Flow Diagram for Airload Module . . . . . | 92 |
| 10 | Speed Altitude Points and Flight Conditions . . . . . | 213 |

## LIST OF TABLES


| Table | Title | Page |
|---|---|---|
| 1 | Subsonic Span Loading Parameter, $C_\ell C/C_L C_{AV}$ | 21 |
| 2 | Subsonic Lift Curve Slope Parameter, $BC_{L\alpha}/K$ | 25 |
| 3 | Flap Incremental Loading Parameter, $C_\ell C/C_{L\alpha} C_{AV}$ | 26 |
| 4 | Supersonic Span Loading Parameter, $2\Gamma/V\alpha b$ | 27 |
| 5 | Typical Blocked Usage Segments for Fighter Class | 71 |
| 6 | Typical Blocked Usage Segments for Attack Class | 72 |
| 7 | Typical Blocked Usage Segments for BI Class | 72 |
| 8 | Typical Blocked Usage Segments for BII Class | 72 |
| 9 | Typical Blocked Usage Segments for Cargo Assault Class | 73 |
| 10 | Typical Blocked Usage Segments for Cargo Transport Class | 73 |
| 11 | Maneuver Load Factor Spectra for Fighter or Attack Classes | 74 |
| 12 | Maneuver Load Factor Spectrum for BI Class, All Segments | 75 |
| 13 | Maneuver Load Factor Spectra for BII Class | 76 |
| 14 | Maneuver Load Factor Spectra for Cargo Assault Class | 77 |
| 15 | Maneuver Load Factor Spectra for Cargo Transport Class | 77 |
| 16 | Turbulence Field Parameters | 79 |
| 17 | Gust Response Factors | 80 |
| 18 | Taxi Load Factor Spectra | 81 |
| 19 | Sample Blocked Usage Segment Maneuver and Gust Wing Bending Moment Spectra for Cargo Assault Class | 84 |
| 20 | Common Arrangement | 94 |
| 21 | Common Region Variable List | 99 |
| 22 | BB Array Variables | 108 |
| 23 | BC Array Variables | 110 |
| 24 | BO Array Variables | 119 |
| 25 | BU Array Variables | 126 |
| 26 | DB Array, Subsonic Aerodynamic Data | 133 |
| 27 | Subsonic Spanwise Loading Parameter Variables in DB Array | 134 |
| 28 | Subsonic Lift Curve Slope Parameter Variables in DB Array | 140 |
| 29 | DE Array, Maneuver Load Factor Spectra Tables | 142 |
| 30 | Maneuver Load Factor Spectra for Fighter or Attack Classes in DE Array | 143 |

| Table | Title | Page |
|---|---|---|
| 31 | Maneuver Load Factor Spectrum for BI Class, All Segments, in DE Array | 144 |
| 32 | Maneuver Load Factor Spectra for BII Class in DE Array | 145 |
| 33 | Maneuver Load Factor Spectra for Cargo Assault Class in DE Array | 146 |
| 34 | Maneuver Load Factor Spectra for Cargo Transport Class in DE Array | 147 |
| 35 | DF Array, Flap Aerodynamic Data | 148 |
| 36 | Flap Incremental Spanwise Loading Parameter Variables in DF Array | 150 |
| 37 | DG Array, Turbulence Field Parameters | 151 |
| 38 | DI Array, Taxi Load Factor Spectra | 152 |
| 39 | DP Array, Supersonic Aerodynamic Data | 153 |
| 40 | Supersonic Spanwise Loading Parameter Variables in DP Array | 154 |
| 41 | DR Array, Gust Response Factors | 159 |
| 42 | Gust Response Factors in DR Array | 160 |
| 43 | DS Array, Blocked Mission Usage for Eight Flight Segments | 161 |
| 44 | Typical Blocked Usage Segments for Fighter Class in DS Array | 162 |
| 45 | Typical Blocked Usage Segments for Attack Class in DS Array | 163 |
| 46 | Typical Blocked Usage Segments for BI Class in DS Array | 164 |
| 47 | Typical Blocked Usage Segments for BII Class in DS Array | 165 |
| 48 | Typical Blocked Usage Segments for Cargo Assault in DS Array | 166 |
| 49 | Typical Blocked Usage Segments for Cargo Transport Class in DS Array | 167 |
| 50 | DT Array, Aerodynamic Data | 168 |
| 51 | DUM Array Variables | 171 |
| 52 | IDUM Array Variables | 173 |
| 53 | ND Array Variables | 174 |
| 54 | RC Array Variables | 183 |
| 55 | RNZ Array Variables | 184 |
| 56 | SAVE Array Variables | 186 |
| 57 | SAVET Array Variables | 187 |

| Table | Title | Page |
|---|---|---|
| 58 | SVF Array Variables | 188 |
| 59 | WLD Array Variables | 190 |
| 60 | XNET Array Variables | 195 |
| 61 | XMISC Array Variables (MISC Block) | 197 |
| 62 | IP or IQ Array Variables (IPRINT BLOCK) | 202 |
| 63 | Mass Storage File Records | 203 |
| 64 | Load Module Control Indicators | 207 |
| 65 | Design Load Conditions and Constraints | 210 |
| 66 | BD Array Variables in Subroutine USPAN | 222 |
| 67 | BS Array Variables in Subroutine USPAN | 225 |
| 68 | BD Array Variables in Subroutine BNLDS | 229 |
| 69 | BS Array Variables in Subroutine BNLDS | 230 |
| 70 | RATIO Array Variables | 243 |
| 71 | RS Array Variables | 246 |
| 72 | FUS Array Variables | 250 |
| 73 | BD Array Variables in Subroutine FATMG | 256 |
| 74 | BS Array Variables in Subroutine FATMG | 259 |
| 75 | BO and DUMMY Array Variables in Subroutine FATMG | 261 |
| 76 | BMAN and DUMMY Array Variables in Subroutine FATMG | 268 |

# APPENDIX A

## MODULE FLOW CHARTS AND FORTRAN LISTS

### FLOW CHART USAGE

The automatically generated computer program flow charts (AUTOFLOW) presented in this document include a table of contents, flow charts, and FORTRAN lists of all routines in the module. The 80-column card lists are sequenced and grouped by routine.

Because the AUTOFLOW system used is IBM-oriented, the functions of the BUFFERIN and BUFFEROUT statements are not recognized, but these statements appear in proper order in note boxes. Also, the PROGRAM name does not appear on the main program, and library routines READMS and WRITMS are listed as undefined external references.

### CROSS-REFERENCE LIST

The AUTOFLOW table of contents which precedes the flow charts and FORTRAN lists serves to cross reference the latter two. This table lists the following from left to right:

- The card identification from columns 73 through 80 of this card, or card sequence number. When sequence number is used in place of card identification, it is enclosed in parentheses.
- The page and box number where this card is displayed in a flow chart.
- The FORTRAN statement number from columns 1 through 5 of this card.
- The card identification(s) or sequence number(s) of the card(s) referring to this card (repeated as required).
- The pages and box numbers where the cards referring to this card are displayed in a flow chart (repeated as required).

### FLOW CHARTS

The flow charts produced by AUTOFLOW use USASI conventional symbols. Since the flow charts are mechanically drawn from the program source deck, there are no omissions or vague generalizations about the processing within the boxes.

Every box on each page is uniquely numbered and may be referred to from elsewhere in the program. The source of a reference to a box will be indicated by showing the page and box number. If the number is followed by an asterisk, there are multiple references to this point, and the others may be found by using the cross-reference list.

The most-often-used symbol is the decision box. Like all boxes, its box number is above and to the right of the box. Its FORTRAN statement number is above and to the left of the box. The decision choices for the paths are printed.

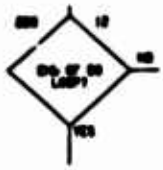

The unconditional transfer connecter has its page number destination printed above or to the left of the box number destination within the connecter. If there is a FORTRAN statement number at the destination, it is printed below the connecter.

The exit box example shows a connecter from page 9, box 15.

The subroutine call box includes the calling sequence. The page and box numbers of the flow chart of the called subroutine are shown on the left-hand side of the box. The page number is above the box number.

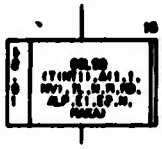

The note box encloses comments of a functional nature,

as differentiated from the 21 column comments, which are left justified without a box, that show the comment cards included in the FORTRAN deck.

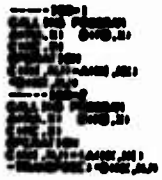

The process box is used to enclose FORTRAN arithmetic statements.

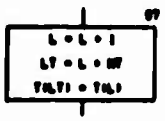

Input and output are shown as communicating with a device. The list used follows, if appropriate:

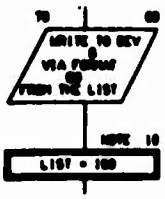

The computed GØ TØ becomes a branch table showing the page and box number of each of the ordered branches.

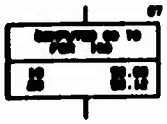

The column connecters and initial connecters are the only boxes without external box numbers. The function of the initial connecter is always clear,

but the label given is the symbol in the next FORTRAN card, which is often blank.

The column connecter identifies the page and box number to which it connects.

MODULE TABLE OF CONTENTS AND REFERENCES

CARD ID PAGE/DOM NAME REFERENCES (SOURCE SEQUENCE NO. AND PAGE/DOM)

FORTRAN MODULE AIRLOADS OVERLAY

CHART TITLE - INTRODUCTORY COMMENTS

CHART TITLE - PROCEDURES


(000040) 2.04 1010 (000042) 2.03 (000042) 2.03
(000047) 2.05 (000051) 2.07
(000051) 2.05 700
(000054) 2.06 3
(000054) 2.06 (000054) 2.10
(000057) 2.12 (000060) 2.14
(000060) 2.13 1
(000063) 2.16 4
(000063) 2.16 (000063) 2.17
(000077) 2.24 5
(000077) 2.24 (000077) 2.25
(000080) 2.27 55
(000084) 2.28 57 (000070) 2.26
(000088) 2.34 (000100) 3.07
(000088) 2.35 16
(000111) 3.01 25 (000100) 3.15
(000112) 3.02 26 (000111) 3.01
(000113) 3.03 27
(000114) 3.04 28 (000112) 3.02
(000116) 3.05 29
(000100) 3.07 15 (000088) 2.34
(000103) 3.08 30
(000104) 3.10 21
(000104) 3.10 (000104) 3.11
(000107) 3.13 22 (000104) 5.07
(000108) 3.14 (000108) 5.03
(000109) 3.15 23
(000110) 3.16 24
(000170) 3.17 124 (000102) 3.00 (000174) 12.20
(000170) 3.18 125 (000174) 12.20
(000400) 3.21 1020 (000400) 3.20 (000400) 3.20
(000110) 4.01 30 (000115) 3.05
(000119) 4.02 31 (000117) 3.06
(000120) 4.03 33
(000122) 4.04 35 (000111) 3.01
(000125) 4.05 36
(000124) 4.06 37 (000127) 4.04
(000128) 4.07 38 (000111) 3.01
(000129) 4.08 40 (000111) 3.01
(000130) 4.09 41 (000111) 3.01
(000131) 4.10 43
(000133) 4.11 44 (000130) 4.09
(000138) 4.12 52 (000111) 3.01
(000137) 4.13 54
(000139) 4.14 55 (000135) 4.12
(000142) 4.15 61 (000111) 3.01
(000145) 5.01 64 (000111) 3.01
(000148) 5.02 68 (000111) 3.01
(000150) 5.03 67 (000100) 3.14 (000119) 4.02 (000121) 4.03 (000125) 4.06 (000127) 4.07
(000170) 4.08 (000130) 4.11 (000141) 4.14 (000144) 4.15 (000147) 5.01
(000152) 5.05 68
(000153) 5.06 69
(000153) 5.06 (000153) 5.07
(000155) 5.08 70 (000151) 5.04
(000160) 5.11 (000161) 11.11
(000160) 5.12 1123
(000170) 5.13 71 (000160) 5.11
(000170) 5.14 72 (000170) 5.13 (000170) 5.13 (000170) 5.13
(000181) 5.15 73 (000170) 5.13
(000184) 5.16 74 (000170) 5.13 (000170) 5.13 (000170) 5.13
(000187) 5.17 75 (000170) 5.13
(000188) 5.18 76 (000170) 5.13 (000170) 5.13 (000170) 5.13 (000170) 5.13
(000193) 5.19 77 (000170) 5.13 (000170) 5.13 (000170) 5.13 (000170) 5.13
(000195) 6.01 78 (000170) 5.13
(000200) 6.03 79

| CARD ID | PAGE/BOX | NAME | REFERENCES (SOURCE SEQUENCE NO. AND PAGE/BOX) | | | | |
|---|---|---|---|---|---|---|---|
| (000202) | 6 04 00 | | (000100) 6 02 | | | | |
| (000203) | 6 05 01 | | (000201) 6 03 | (000210) 7.01 | | | |
| (000210) | 6 07 02 | | | | | | |
| (000212) | 6 00 03 | | (000200) 6 00 | | | | |
| (000214) | 7.01 04 | | (000170) 5.13 | | | | |
| (000219) | 7 02 05 | | (000170) 5 13 | (000170) 5 13 | (000170) 5 13 | | |
| (000220) | 7 03 06 | | (000170) 5 13 | (000170) 5.13 | | | |
| (000225) | 7.04 07 | | (000100) 5 14<br>(000201) 7.02 | (000103) 5.15 | (000100) 5 16 | (000100) 5 17 | (000105) 5 18 |
| (000230) | 7.05 08 | | | | | | |
| (000234) | 7.07 09 | | (000200) 7.00 | | | | |
| (000235) | 8.01 00 | | (000102) 5.10 | (000204) 7.03 | | | |
| (000237) | 8.02 02 | | (000230) 7 00 | (000232) 7.07 | | | |
| (000240) | 8.04 03 | | | | | | |
| (000241) | 8.05 04 | | | | | | |
| (000242) | 8.06 05 | | (000230) C 03 | | | | |
| (000243) | 8.07 07 | | | | | | |
| (000243) | 8 00 06 | | (000240) 8 04 | | | | |
| (000246) | 8 00 00 | | (000245) 8.05 | | | | |
| (000246) | 9 10 00 | | (000251) 8 11 | | | | |
| (000254) | 9.11 100 | | (000240) 8.00 | | | | |
| (000252) | 9 12 101 | | | | | | |
| (000253) | 9.13 102 | | | | | | |
| (000255) | 9.01 103 | | (000252) 9 12 | | | | |
| (000256) | 9.02 104 | | (000242) 8 06 | (000247) 8 07 | (000244) 8 00 | (000250) 8 10 | (000254) 8 13 |
| (000258) | 9.04 105 | | (000251) 9 05 | | | | |
| (000261) | 9.05 106 | | (000250) 9 03 | | | | |
| (000262) | 9.06 107 | | | | | | |
| (000263) | 9.07 108 | | (000211) 6 07 | (000213) 6 00 | (000250) 9.03 | (000260) 9 04 | |
| (000270) | 9.10 111 | | | | | | |
| (000272) | 9.12 113 | | (000000) 9 00 | | | | |
| (000273) | 9.13 114 | | (000273) 9 13<br>(000273) 9 13 | (000273) 9 13<br>(000273) 9 13 | (000273) 9 13 | (000273) 9 13 | (000273) 9 13 |
| (000277) | 9 16 115 | | (000273) 9 13 | | | | |
| (000278) | 9 17 116 | | (000273) 9 13 | | | | |
| (000284) | 9 18 117 | | (000273) 9 13 | (000273) 9 13 | (000273) 9 13 | (000273) 9.13 | |
| (000285) | 9 19 118 | | (000273) 9 13 | (000273) 9 13 | (000273) 9 13 | (000273) 9 13 | |
| (000286) | 9 20 119 | | (000273) 9 13 | (000273) 9 13 | | | |
| (000287) | 9 21 120 | | (000273) 9 13 | (000273) 9 13 | | | |
| (000288) | 10 01 121 | | (000273) 9 13 | (000273) 9 13 | | | |
| (000289) | 10 02 122 | | (000273) 9 15<br>(000285) 9 20 | (000278) 9 16<br>(000285) 9 21 | (000280) 9 17 | (000282) 9 18 | (000284) 9.19 |
| (000314) | 10 05 403 | | (000312) 10 05 | | | | |
| (000316) | 10 07 6 | | (000314) 10 05<br>(000314) 10 05<br>(000314) 10 05 | (000314) 10 05<br>(000314) 10 05<br>(000314) 10 05 | (000314) 10 05<br>(000314) 10 05<br>(000314) 10 05 | (000314) 10 05<br>(000314) 10 05<br>(000314) 10.05 | (000314) 10.05<br>(000314) 10.05<br>(000314) 10.05 |
| (000320) | 10 00 7 | | (000314) 10 05<br>(000314) 10 05 | (000314) 10 05 | (000314) 10 05 | (000314) 10 05 | (000314) 10 05 |
| (000324) | 10 00 8 | | (000314) 10 05 | | | | |
| (000328) | 11 01 9 | | (000314) 10 00 | | | | |
| (000331) | 11.02 10 | | (000310) 10 07 | (000320) 10 00 | (000320) 10 00 | | |
| (000334) | 11 04 11 | | (000334) 11 03 | | | | |
| (000342) | 11 05 12 | | (000334) 11 03 | | | | |
| (000344) | 11 06 13 | | (000342) 11 05 | | | | |
| (000348) | 11.07 14 | | (000312) 10 05 | (000342) 11 05 | | | |
| (000357) | 11.10 015 | | (000353) 11 00 | | | | |
| (000361) | 11 11 123 | | (000171) 9 12 | (000353) 11 00 | | | |
| (000366) | 11 14 034 | | (000364) 11 13 | | | | |
| (000368) | 11.15 032 | | (000364) 11 13 | | | | |
| (000372) | 12 01 0033 | | (000368) 11 15 | | | | |
| (000374) | 12.02 0034 | | (000368) 11 15 | | | | |
| (000376) | 12 03 | | (000374) 12 00 | | | | |
| (000377) | 12 00 1133 | | (000376) 12 05 | | | | |
| (000384) | 12.00 133 | | (000376) 12 05 | | | | |
| (000387) | 12.10 402 | | | | | | |
| (000388) | 12.11 405 | | (000386) 12 00 | | | | |
| (000402) | 12.12 407 | | | | | | |
| (000402) | 12.13 410 | | (000388) 12.11 | | | | |
| (000403) | 12.14 412 | | | | | | |
| (000405) | 12.15 420 | | (000402) 12.13 | | | | |
| (000406) | 12.17 0003 | | | | | | |
| (000404) | 12.00 0007 | | (000402) 12.05 | | | | |
| (000412) | 12.00 0006 | | (000407) 12.16 | (000402) 12.05 | | | |

CHART TITLE - NON-PROCEDURAL STATEMENTS

CARD ID PAGE/BOX NAME REFERENCES (SOURCE SEQUENCE NO. AND PAGE/BOX)

CHART TITLE - INTRODUCTORY COMMENTS

CHART TITLE - SUBROUTINE ATMOS(H,RHOH,PH,AH)

| | | | | | | | | | | | |
|---|---|---|---|---|---|---|---|---|---|---|---|
| (000400) | 15.01 | ATMOS | (000020) | 10.01-X | (000035) | 32.10-X | | | | | |
| (000002) | 15.04 | 30 | | | | | | | | | |
| (000007) | 15.05 | 40 | (000001) | 15.03 | | | | | | | |
| (000008) | 15.06 | 45 | | | | | | | | | |
| (000012) | 15.07 | 50 | (000007) | 15.05 | | | | | | | |
| (000013) | 15.08 | 55 | | | | | | | | | |
| (000016) | 15.09 | 60 | (000012) | 15.07 | | | | | | | |
| (000019) | 15.10 | 65 | | | | | | | | | |
| (000023) | 16.01 | 70 | (000016) | 15.09 | | | | | | | |
| (000024) | 16.02 | 75 | | | | | | | | | |
| (000029) | 16.03 | 80 | (000023) | 16.01 | | | | | | | |
| (000033) | 16.04 | 100 | (000030) | 15.04 | (000017) | 15.08 | (000020) | 16.02 | | | |
| (000040) | 16.05 | 110 | (000011) | 15.08 | (000020) | 15.10 | (000032) | 16.03 | | | |
| (000046) | 16.06 | 120 | (000030) | 16.05 | | | | | | | |

CHART TITLE - INTRODUCTORY COMMENTS

CHART TITLE - SUBROUTINE SHLOS

| | | | | | | | | | | | |
|---|---|---|---|---|---|---|---|---|---|---|---|
| (000000) | 10.01 | SHLOS | (000000) | 10.02-X | | | | | | | |
| (000000) | 10.04 | 3 | (000000) | 10.04 | | | | | | | |
| (000007) | 10.05 | 4 | (000070) | 10.05 | | | | | | | |
| (000074) | 10.07 | 5 | (000070) | 10.05 | | | | | | | |
| (000070) | 10.08 | 6 | (000070) | 10.05 | | | | | | | |
| (000077) | 10.09 | 7 | | | | | | | | | |
| (000070) | 10.10 | 8 | (000070) | 10.08 | | | | | | | |
| (000001) | 10.01 | 9 | (000070) | 10.05 | | | | | | | |
| (000000) | 10.02 | 10 | (000070) | 10.05 | | | | | | | |
| (000000) | 10.03 | 11 | (000070) | 10.08 | (000000) | 10.10 | (000004) | 10.01 | | | |
| (000000) | 10.05 | 12 | | | | | | | | | |
| (000000) | 10.06 | 13 | | | | | | | | | |
| (000000) | 10.08 | 00 | | | | | | | | | |
| (000004) | 10.09 | 01 | (000002) | 10.07 | | | | | | | |
| (000007) | 10.10 | 14 | (000000) | 10.05 | | | | | | | |
| (000000) | 10.11 | 15 | (000000) | 10.09 | | | | | | | |
| (000000) | 10.12 | 16 | | | | | | | | | |
| (000002) | 10.13 | 17 | (000000) | 10.11 | | | | | | | |
| (000003) | 10.14 | 18 | (000001) | 10.12 | | | | | | | |
| (000000) | 10.16 | 19 | (000000)<br>(000013) | 10.15<br>10.10 | (000005) | 10.15 | (000005) | 10.15 | (000005) | 10.15 | (000005) | 10.15 |
| (000000) | 10.17 | 20 | (000000) | 10.15 | (000005) | 10.15 | | | | | |
| (000011) | 10.18 | 21 | (000000) | 10.15 | | | | | | | |
| (000014) | 20.01 | 22 | (000007) | 10.16 | (000010) | 10.17 | | | | | |
| (000023) | 20.05 | 23 | | | | | | | | | |
| (000027) | 20.08 | 24 | (000002) | 20.05 | | | | | | | |
| (000020) | 20.10 | 52 | | | | | | | | | |
| (000031) | 20.11 | 53 | (000020) | 20.08 | | | | | | | |
| (000032) | 20.12 | 54 | (000030) | 20.10 | | | | | | | |
| (000040) | 20.16 | 55 | | | | | | | | | |
| (000042) | 20.17 | 56 | (000030) | 20.15 | | | | | | | |
| (000043) | 20.18 | 57 | (000041) | 20.16 | | | | | | | |
| (000044) | 20.19 | 58 | | | | | | | | | |
| (000045) | 20.20 | 59 | (000043) | 20.18 | | | | | | | |
| (000051) | 20.23 | 25 | | | | | | | | | |
| (000051) | 20.23 | | (000051) | 20.24 | | | | | | | |
| (000054) | 20.27 | 26 | (000053)<br>(000057) | 20.25<br>20.26 | (000053) | 20.26 | (000053) | 20.26 | (000000) | 20.05 | (000002) | 20.06 |
| (000000) | 21.01 | 27 | (000053) | 20.26 | (000053) | 20.26 | | | | | |
| (000057) | 21.02 | 28 | | | | | | | | | |
| (000000) | 21.03 | 29 | (000000) | 21.01 | | | | | | | |
| (000000) | 21.04 | 30 | (000000) | 21.02 | | | | | | | |
| (000002) | 21.06 | 31 | | | | | | | | | |
| (000004) | 21.07 | 32 | (000001) | 21.05 | | | | | | | |
| (000005) | 21.08 | 33 | (000003) | 21.06 | | | | | | | |
| (000070) | 21.11 | 1 | | | | | | | | | |
| (000071) | 21.12 | 2 | | | | | | | | | |
| (000071) | 21.12 | | (000071) | 21.13 | | | | | | | |
| (000070) | 21.14 | 40 | (000000) | 21.10 | | | | | | | |

CARD ID PAGE/SEQ NAME REFERENCES (SOURCE SEQUENCE NO. AND PAGE/SEQ)

```
(000000)  00.01  34          (000003)  00.00
(000000)  00.03  50
(000007)  00.04  51          (000000)  00.02
(000004)  00.05  35          (000003)  00.00
(000005)  00.07  35          (000003)  00.00
(000000)  00.08  37          (000000)  00.07    (000002)  01.17
(000000)  00.10  1000
(000701)  00.12  47
(000702)  00.13  40          (000700)  00.11
(000703)  00.20  1002        (000000)  00.00
(000707)  00.30  40          (000701)  00.12
```

CHART TITLE - NON-PROCEDURAL STATEMENTS

CHART TITLE - INTRODUCTORY COMMENTS

CHART TITLE - FUNCTION CODIN(I,X1,Y1,N,K)

```
(000704)  00.01  110         (000701)  00.04    (000700)  00.10
(000705)  00.02  140         (000700)  00.15
(000702)  00.03  100         (000704)  00.00
(000704)  00.05  150         (000701)  00.04
(000705)  00.07  165
(000700)  00.08              (000700)  00.10
(000702)  00.10  170
(000704)  00.11  175         (000704)  00.00
(000703)  00.12              (000707)  00.14
(000707)  00.14  180
(000700)  00.15  185         (000703)  00.10    (000700)  00.02
(000700)  00.16  190         (000701)  00.00    (000700)  00.13
(000701)  00.17  210
(000704)  00.01  200         (000711)  00.00    (000700)  00.13
(000700)  00.02  200         (000700)  00.10
(000707)  00.03  200
(000710)  00.04  200         (000700)  00.02
(000711)  00.05  200         (000703)  00.17    (000700)  00.03
(000712)  00.06  200
(000713)  00.07  200         (000711)  00.05
(000700)  00.12  300
(000700)  00.13  310         (000707)  00.11
(000707)  00.15  315         (000700)  00.12
(000700)  00.16  320         (000707)  00.15
(000003)  07.01  330         (000707)  00.15
(000007)  07.03  350         (000707)  00.15    (000002)  00.16
(000010)  07.05  400
(000012)  07.06  410         (000000)  07.04
(000014)  07.07  000         (000707)  00.02    (000703)  00.05    (000700)  00.01    (000011)  07.06
```

CHART TITLE - NON-PROCEDURAL STATEMENTS

CHART TITLE - INTRODUCTORY COMMENTS

CHART TITLE - SUBROUTINE FATIG

```
(000000)  30.01  FATIG       (000703)   3.17-E
(000002)  30.07  2
(000002)  30.07              (000002)  30.00
(000003)  30.00  4
(000004)  30.11  5           (000004)  30.10
(000007)  30.12  6           (000004)  30.10
(000010)  30.13  7           (000004)  30.10
(000011)  30.14  8           (000004)  30.10
(000013)  30.15  9           (000004)  30.10
(000014)  30.16  10          (000004)  30.10    (000010)  30.11    (000010)  30.12    (000000)  30.13    (000012)  30.14
(000000)  30.17              (000000)  30.10
(000000)  30.18  11
(000000)  30.21              (000000)  30.25
(000000)  30.22  12
(000000)  30.23  13          (000001)  30.25
(000004)  31.01  14          (000001)  30.25
(000005)  31.02  15          (000001)  30.25
```

| CARD ID | PAGE/SEQ | NAME | REFERENCES (SOURCE SEQUENCE NO AND PAGE/SEQ) |
|---|---|---|---|
| (000000) | 31 03 10 | | (000001) 30 25 |
| (000000) | 31 04 17 | | (000001) 30 25 (000002) 30 25 (000003) 30 25 (000006) 31 01 (000007) 31 02 |
| (000070) | 31 05 | | (000070) 31 06 |
| (000073) | 31 07 10 | | |
| (000075) | 31 08 19 | | (000070) 31 06 |
| (000076) | 31 09 20 | | (000074) 31 07 |
| (000002) | 31 12 | | (000070) 33 21 |
| (000000) | 31 15 21 | | |
| (000001) | 31 16 22 | | (000027) 31 14 |
| (000003) | 31 17 23 | | (000000) 31 15 |
| (000004) | 31 18 24 | | (000004) 31 23 (000005) 31 24 |
| (000000) | 31 21 25 | | |
| (000001) | 31 22 27 | | (000000) 31 20 (000000) 31 25 |
| (000004) | 31 23 28 | | (000003) 31 17 |
| (000005) | 31 24 29 | | |
| (000000) | 31 25 30 | | |
| (000007) | 31 26 31 | | (000003) 31 22 |
| (000000) | 31 28 32 | | (000000) 31 27 (000000) 31 27 |
| (000011) | 31 30 33 | | (000010) 31 28 |
| (000013) | 32 01 34 | | (000010) 31 29 |
| (000015) | 32 02 35 | | (000010) 31 29 |
| (000017) | 32 03 36 | | (000000) 31 27 |
| (000019) | 32 04 37 | | (000000) 31 27 |
| (000021) | 32 05 38 | | |
| (000023) | 32 07 39 | | (000020) 32 06 |
| (000025) | 32 08 40 | | (000000) 31 27 |
| (000027) | 32 10 41 | | |
| (000029) | 32 11 42 | | (000000) 31 27 |
| (000031) | 32 13 43 | | |
| (000032) | 32 14 44 | | (000010) 31 29 (000012) 31 30 (000014) 32 01 (000016) 32 02 (000018) 32 03<br>(000000) 32 05 (000000) 32 06 (000020) 32 07 (000020) 32 09 (000000) 32 10<br>(000030) 32 12 |
| (000033) | 32 15 | | (000035) 32 17 |
| (000035) | 32 16 45 | | |
| (000040) | 32 21 | | (000041) 33 01 |
| (000041) | 32 22 46 | | |
| (000042) | 33 07 | | (000000) 33 10 |
| (000000) | 33 08 47 | | |
| (000000) | 33 10 48 | | (000004) 33 08 |
| (000047) | 33 11 49 | | |
| (000050) | 33 12 50 | | (000000) 33 10 |
| (000055) | 33 15 51 | | |
| (000057) | 33 16 52 | | (000004) 33 14 |
| (000000) | 33 17 53 | | (000000) 33 15 |
| (000070) | 33 20 54 | | |
| (000072) | 33 23 55 | | |
| (000073) | 33 24 | | (000074) 33 26 |
| (000074) | 33 25 56 | | |
| (000077) | 33 26 57 | | |
| (000070) | 33 30 58 | | (000070) 33 20 |
| (000070) | 33 31 | | (000003) 33 33 |
| (000003) | 33 32 59 | | |
| (000000) | 33 35 60 | | |
| (000000) | 34 01 61 | | (000005) 33 35 |
| (000000) | 34 02 62 | | (000027) 33 35 |
| (000000) | 34 05 | | (001000) 34 00 |
| (001000) | 34 07 63 | | |
| (001012) | 35 02 03 | | |
| (001014) | 35 04 05 | | |
| (001015) | 35 05 06 | | (001011) 35 01 (001013) 35 03 |
| (001023) | 35 08 07 | | (000071) 33 22 |
| (001000) | 35 10 7001 | | |
| (001020) | 35 11 08 | | (001035) 35 02 |
| (001030) | 35 12 09 | | |
| (001035) | 35 14 05 | | (001020) 35 11 |
| (001040) | 35 16 07 | | (001034) 35 13 |
| (001041) | 35 17 | | (001052) 34 27 |
| (001042) | 35 18 70 | | |
| (001044) | 35 19 72 | | (001041) 35 17 |
| (001040) | 35 21 00 | | |
| (001040) | 35 23 101 | | (001045) 35 20 |
| (001052) | 35 26 74 | | (001040) 35 22 |
| (001054) | 35 28 102 | | |

```
CARD ID   PAGE/BOX   NAME                          REFERENCES (SOURCE SEQUENCE NO. AND PAGE/BOX)

(001057)  35.32  103          (001053)  35.30
(001058)  35.33  75
(001059)  35.01  76           (001057)  35.32
(001060)  35.02  77           (001058)  35.33
(001062)  35.03  78           (001059)  35.01
(001069)  35.07  5002         (001027)  35.00    (001060)  35.33
(001073)  35.00  115
(001073)  35.00               (001073)  35.14
(001075)  35.12  116
(001076)  35.12               (001075)  35.13
(001077)  35.14  80
(001078)  35.15  112          (001077)  35.14
(001082)  37.01  113          (001077)  35.14
(001084)  37.02  114          (001080)  35.15
(001085)  37.03               (001080)  37.07
(001086)  37.05  110
(001088)  37.05               (001088)  37.05
(001090)  37.07  117
(001092)  37.08  120
(001092)  37.09               (001092)  37.10
(001094)  37.12  122
(001094)  37.12               (001094)  37.13

CHART TITLE - NON-PROCEDURAL STATEMENTS

CHART TITLE - INTRODUCTORY COMMENTS

CHART TITLE - FUNCTION  FCOSM2(X,Y,X1,Y1,Z1,N1,N2,NX)

(001123)  40.01  100
(001124)  40.02  110
(001127)  40.03  120          (001123)  40.01
(001129)  40.04  125          (001131)  40.05
(001130)  40.05  130
(001132)  40.07  150          (001129)  40.04
(001133)  40.08  155
(001135)  40.09  160          (001132)  40.07
(001136)  40.10  165          (001131)  40.05
(001139)  41.01  170          (001135)  40.09
(001139)  41.02  200          (001126)  40.02    (001134)  40.08    (001137)  40.10
(001140)  41.03               (001143)  41.05
(001143)  41.04  300

CHART TITLE - NON-PROCEDURAL STATEMENTS

CHART TITLE - INTRODUCTORY COMMENTS

CHART TITLE - SUBROUTINE  FUSNET

(001155)  44.01  FUSNET       (000357)  11.10-X   (000386)  11.14-X
(001173)  44.02  0
(001175)  44.04               (001175)  44.05
(001176)  44.05  10
(001178)  44.06  700          (001172)  44.01
(001179)  44.07  701
(001179)  44.07               (001179)  44.08
(001181)  44.08  710          (001175)  44.04
(001183)  44.10  615          (001181)  44.09
(001185)  44.12  601
(001189)  44.13  603          (001185)  44.11
(001191)  44.14  604
(001195)  44.15  605          (001190)  44.13
(001199)  44.16  606
(001201)  45.01  600          (001199)  45.03    (001203)  45.05
(001199)  45.02  602          (001195)  44.11
(001199)  45.03  607          (001195)  44.15
(001199)  45.04  608          (001195)  44.15
(001203)  45.05  610          (001199)  45.03
(001204)  45.06  611
(001205)  45.07  612          (001197)  44.12    (001194)  44.14    (001197)  44.16    (001202)  45.01    (001199)  45.02
                              (001200)  45.04
```

CARD ID PAGE/BOX NAME REFERENCES (SOURCE SEQUENCE NO. AND PAGE/BOX)

(001200) 45 00 620 (001205) 45 07
(001211) 46 01 621 (001206) 45 07
(001213) 46 02 622 (001209) 45 20
(001230) 46 08 3012 (001101) 44 09
(001247) 46 11 3015 (001235) 46 07

CHART TITLE - NON-PROCEDURAL STATEMENTS

CHART TITLE - INTRODUCTORY COMMENTS

CHART TITLE - SUBROUTINE MAILDS

(001260) 49 01 MAILDS (000351) 11 00-X (000372) 12 01-X
(001304) 49 01 100
(001305) 49 02 101
(001306) 49 03 102
(001308) 49 05 (001309) 49 06
(001309) 49 06 103
(001313) 49 07 104 (001304) 49 01
(001314) 49 08 (001315) 49 09
(001315) 49 09 105
(001434) 49 10 102 (001305) 49 02 (001430) 53 11
(001438) 49 11 (001551) 57 10
(001444) 49 15 1 (001442) 49 14 (001442) 49 14 (001442) 49 14 (001442) 49 14 (001442) 49 14
(001442) 49 14 (001442) 49 14 (001442) 49 14 (001442) 49 14 (001442) 49 14
(001442) 49 14 (001442) 49 14 (001442) 49 14 (001442) 49 14 (001442) 49 14
(001331) 49 21 (001332) 49 22
(001332) 49 22 7001
(001341) 49 23 700 (001300) 49 05
(001347) 49 25 (001413) 53 02
(001349) 49 26 001 (001347) 49 25
(001351) 50 01 021 (001349) 49 26
(001352) 50 02 (001353) 50 04
(001353) 50 03 005
(001357) 50 06 002 (001347) 49 25
(001360) 50 07 022 (001357) 50 06
(001360) 50 08 (001361) 50 10
(001361) 50 09 006
(001365) 50 12 003 (001347) 49 25
(001367) 50 13 023 (001365) 50 12
(001368) 50 14 (001360) 50 16
(001369) 50 15 007
(001372) 50 18 010 (001355) 50 05 (001363) 50 11
(001374) 50 19 052 (001372) 50 18
(001377) 51 01 055 (001372) 50 18
(001378) 51 02 050 (001377) 51 01
(001383) 52 01 005 (001377) 51 01
(001389) 52 02 075 (001383) 52 01
(001390) 52 03 (001384) 52 05
(001391) 52 04 076
(001394) 52 05 002 (001380) 52 03
(001395) 52 06 005 (001381) 51 02 (001393) 52 04 (001397) 52 08
(001400) 52 07 000 (001375) 50 19
(001402) 52 08 011 (001400) 52 07
(001395) 52 09 000 (001383) 52 01
(001406) 52 10 012 (001400) 52 07
(001410) 53 01 013 (001406) 52 07
(001413) 53 02 000 (001349) 49 26 (001357) 50 06 (001365) 50 12 (001404) 52 08 (001408) 52 10
(001418) 53 04 (001420) 53 18
(001419) 53 05 01
(001421) 53 06 02 (001410) 53 04
(001423) 53 07 03 (001421) 53 06
(001425) 53 08 04 (001421) 53 06
(001426) 53 09 05
(001428) 53 10 02 (001425) 53 08
(001432) 54 01 40 (001463) 54 06 (001462) 54 07 (001466) 55 01 (001478) 55 06 (001478) 55 06
(001480) 55 07
(001440) 54 02 2 (001442) 49 14 (001442) 49 14 (001442) 49 14 (001442) 49 14 (001442) 49 14
(001442) 49 14
(001453) 54 03 3 (001442) 49 14
(001457) 54 04 4 (001442) 49 14
(001460) 54 05 10 (001446) 49 15 (001451) 54 02 (001455) 54 03
(001462) 54 07 30 (001463) 54 06

| CARD ID | PAGE/BOX | NAME | | REFERENCES (SOURCE SEQUENCE NO. AND PAGE/BOX) | | | | |
|---|---|---|---|---|---|---|---|---|
| (001400) | 04.00 31 | | (001402) 04.07 | | | | | |
| (001403) | 00.01 20 | | (001403) 04.00 | | | | | |
| (001407) | 00.02 21 | | (001400) 00.01 | | | | | |
| (001404) | 00.04 35 | | (001400) 04.00 | | | | | |
| (001470) | 00.05 25 | | (001470) 00.00 | | | | | |
| (001470) | 00.07 35 | | | | | | | |
| (001404) | 00.00 30 | | (001402) 04.01 | | | | | |
| (001405) | 00.00 31 | | (001404) 00.00 | | | | | |
| (001500) | 00.13 05 | | (001500) 00.05 | | | | | |
| (001510) | 00.15 05 | | (001500) 00.14 | | | | | |
| (001511) | 00.16 05 | | | | | | | |
| (001514) | 00.01 00 | | (001402) 04.01 | | | | | |
| (001510) | 00.02 01 | | (001514) 00.01 | | | | | |
| (001520) | 07.01 14 | | (001442) 40.14 | | | | | |
| (001533) | 07.03 13 | | (001531) 07.02 | | | | | |
| (001535) | 07.04 16 | | (001533) 07.03 | | | | | |
| (001541) | 07.05 17 | | (001531) 07.02 | (001533) 07.03 | | | | |
| (001542) | 07.07 19 | | | | | | | |
| (001544) | 07.00 10 | | (001542) 07.07 | | | | | |
| (001551) | 07.10 00 | | (001402) 04.01<br>(001514) 00.01 | (001404) 04.00<br>(001711) 07.00 | (001500) 00.14<br>(001542) 07.07 | (001510) 00.15 | (001512) 00.16 | |
| (001553) | 07.11 100 | | (001520) 03.11 | | | | | |
| (001554) | 07.12 100 | | | | | | | |
| (001555) | 07.13 100 | | | | | | | |
| (001555) | 00.01 107 | | (001553) 07.11 | (001554) 07.12 | (001555) 07.13 | | | |
| (001561) | 00.02 0 | | (001555) 00.01<br>(001555) 00.01<br>(001555) 00.01 | (001555) 00.01<br>(001555) 00.01<br>(001555) 00.01 | (001555) 00.01<br>(001555) 00.01<br>(001555) 00.01 | (001555) 00.01<br>(001555) 00.01<br>(001555) 00.01 | (001555) 00.01<br>(001555) 00.01<br>(001555) 00.01 | |
| (001564) | 00.03 7 | | (001555) 00.01<br>(001555) 00.01 | (001555) 00.01 | (001555) 00.01 | (001555) 00.01 | (001555) 00.01 | |
| (001567) | 00.04 0 | | (001555) 00.01 | | | | | |
| (001570) | 00.01 0 | | (001555) 00.01 | | | | | |
| (001572) | 00.02 15 | | (001567) 00.02 | (001555) 00.03 | (001555) 00.04 | | | |
| (001573) | 00.03 11 | | | | | | | |
| (001574) | 00.04 12 | | (001570) 00.02 | | | | | |
| (001577) | 00.07 | | (001577) 00.10 | | | | | |
| (001634) | 00.11 102 | | (001573) 00.03 | (001620) 00.11 | (001630) 00.12 | | | |
| (001630) | 00.13 | | (001600) 01.05 | | | | | |
| (001607) | 00.17 120 | | (001607) 00.10 | | | | | |
| (001600) | 00.10 131 | | (001607) 00.17 | | | | | |
| (001604) | 00.19 140 | | (001607) 00.10 | (001607) 00.17 | (001600) 00.01 | (001605) 00.02 | | |
| (001617) | 00.20 100 | | (001604) 00.19 | | | | | |
| (001600) | 00.01 120 | | (001607) 00.10 | | | | | |
| (001601) | 00.02 121 | | (001600) 00.01 | | | | | |
| (001605) | 00.03 150 | | (001604) 00.19 | | | | | |
| (001600) | 00.04 151 | | (001605) 00.03 | | | | | |
| (001619) | 00.07 161 | | (001617) 00.20 | | | | | |
| (001627) | 00.10 100 | | (001604) 00.19 | (001617) 00.20 | (001605) 00.03 | (001619) 00.05 | | |
| (001620) | 00.11 100 | | | | | | | |
| (001630) | 00.12 101 | | | | | | | |
| (001647) | 00.13 201 | | (001645) 00.16 | | | | | |
| (001655) | 00.16 240 | | (001645) 00.16 | | | | | |
| (001657) | 01.01 251 | | (001655) 00.16 | | | | | |
| (001660) | 01.05 200 | | (001655) 00.16 | | | | | |
| (001672) | 01.05 105 | | (001555) 07.13 | (001555) 00.01 | (001630) 00.12 | | | |
| (001673) | 01.07 200 | | | | | | | |
| (001670) | 01.00 201 | | | | | | | |
| (001601) | 01.10 202 | | (001677) 01.00 | | | | | |
| (001700) | 01.13 | | (001701) 01.14 | | | | | |
| (001701) | 01.14 203 | | | | | | | |
| (001704) | 01.19 204 | | (001660) 01.21 | | | | | |
| (001700) | 01.17 200 | | (001672) 01.05 | | | | | |
| (001660) | 01.18 205 | | | | | | | |
| (001603) | 01.20 206 | | (001670) 01.10 | | | | | |
| (001605) | 01.21 207 | | (001602) 01.19 | | | | | |

CHART TITLE - NON-PROCEDURAL STATEMENTS

CHART TITLE - INTRODUCTORY COMMENTS

CHART TITLE - SUBROUTINE SPASH

(001710) 04.01 SPASH (000300) 10 03-X

| CARD ID | PAGE/BOX | NAME | REFERENCES (SOURCE SEQUENCE NO AND PAGE/BOX) | | |
|---|---|---|---|---|---|
| (001706) | 04.02 2 | | (001731) 04.07 | | |
| (001707) | 04.03 | | (001700) 04.05 | | |
| (001709) | 04.04 3 | | | | |
| (001730) | 04.07 4 | | | | |
| (001732) | 04.08 5 | | (001709) 04.06 | | |
| (001736) | 04.10 1 | | | | |
| (001738) | 04.11 6 | | (001734) 04.09 | | |
| (001739) | 04.13 7 | | | | |
| (001700) | 04.14 15 | | (001738) 04.10 | (001021) 05.35 | (001022) 05.37 |
| (001704) | 04.16 47 | | | | |
| (001705) | 04.17 16 | | (001703) 04.15 | | |
| (001770) | 04.19 | | (001772) 04.21 | | |
| (001772) | 04.20 18 | | | | |
| (001777) | 04.23 19 | | (001704) 04.16 | (001023) 05.01 | |
| (001700) | 04.25 40 | | | | |
| (001701) | 04.26 20 | | (001774) 04.24 | | |
| (001702) | 04.27 21 | | | | |
| (001741) | 05.01 8 | | (001737) 04.12 | | |
| (001743) | 05.02 9 | | (001740) 04.13 | | |
| (001747) | 05.04 | | (001749) 05.05 | | |
| (001740) | 05.05 13 | | | | |
| (001754) | 05.08 14 | | (001022) 05.37 | | |
| (001704) | 05.09 22 | | (001701) 04.26 | | |
| (001707) | 05.10 23 | | (001701) 04.26 | | |
| (001708) | 05.11 24 | | (001703) 04.27 | | |
| (001700) | 05.12 25 | | (001700) 05.00 | | |
| (001703) | 05.14 | | (001705) 05.16 | | |
| (001705) | 05.15 27 | | | | |
| (001700) | 05.18 28 | | (001770) 04.22 | (001753) 05.07 | (001700) 05.08 |
| (001800) | 05.19 29 | | (001803) 05.21 | | |
| (001802) | 05.20 30 | | (001700) 05.18 | | |
| (001804) | 05.22 32 | | (001700) 05.18 | | |
| (001805) | 05.23 33 | | (001801) 05.19 | | |
| (001800) | 05.26 | | (001820) 05.35 | | |
| (001812) | 05.28 34 | | | | |
| (001813) | 05.29 35 | | | | |
| (001815) | 05.30 36 | | (001812) 05.28 | | |
| (001816 | 05.31 37 | | (001811) 05.27 | (001814) 05.29 | |
| (001820) | 05.34 38 | | | | |
| (001822) | 05.37 39 | | | | |
| (001823) | 06.01 40 | | (001821) 05.35 | | |
| (001824) | 06.02 41 | | (001700) 04.25 | | |
| (001826) | 06.04 9501 | | | | |
| (001828) | 06.06 42 | | | | |
| (001829) | 06.07 50 | | (001827) 06.05 | | |
| (001830) | 06.13 9502 | | (001829) 06.03 | | |
| (001840) | 06.14 51 | | (001828) 06.06 | | |
| (001841) | 06.15 9503 | | | | |
| (001843) | 06.17 52 | | | | |
| (001844) | 06.18 53 | | (001842) 06.16 | | |
| (001850) | 06.24 9504 | | (001840) 06.14 | | |
| (001850) | 06.25 54 | | (001843) 06.17 | | |
| (001851) | 06.26 9505 | | | | |
| (001853) | 06.28 55 | | | | |
| (001854) | 06.29 56 | | (001852) 06.27 | | |
| (001850) | 06.35 57 | | (001853) 06.28 | | |
| (001856) | 06.36 9506 | | (001850) 06.25 | | |

CHART TITLE - NON-PROCEDURAL STATEMENTS

CHART TITLE - INTRODUCTORY COMMENTS

CHART TITLE - SUBROUTINE USPAN

| | | | | | |
|---|---|---|---|---|---|
| (001000) | 00.01 6 | | (001006) 00.07 | | |
| (001000) | 00.02 USPAN | | (000271) 9.11-X | (000004) 31.10-X | |
| (001003) | 00.03 1 | | | | |
| (001003) | 00.03 | | (001003) 00.04 | | |
| (001006) | 00.06 2 | | (002200) 70.13 | (002202) 01.07 | (002204) 01.08 |
| (001006) | 00.07 | | (001005) 70.03 | | |
| (001007) | 00.08 3 | | | | |

| CARD ID | PAGE/BOX | NAME | REFERENCES (SOURCE SEQUENCE NO. AND PAGE/BOX) | | | | | | | |
|---|---|---|---|---|---|---|---|---|---|---|
| (001000) | 00.10 | 4 | | | | | | | | |
| (001000) | 00.11 | 7 | (001007) | 00.07 | | | | | | |
| (001003) | 00.12 | 5 | (001400) | 00.00 | | | | | | |
| (001000) | 70.01 | 151 | (001000) | 70.04 | | | | | | |
| (001004) | 70.02 | 8 | (001000) | 00.01 | (001002) | 00.10 | (001000) | 00.12 | | |
| (001006) | 70.03 | 9 | (001003) | 00.11 | | | | | | |
| (001007) | 70.05 | 150 | | | | | | | | |
| (001011) | 70.06 | 152 | (001000) | 70.04 | | | | | | |
| (001012) | 70.07 | 153 | (001010) | 70.01 | (001000) | 70.05 | | | | |
| (001013) | 70.00 | | (001012) | 70.07 | | | | | | |
| (001016) | 70.11 | 10 | | | | | | | | |
| (001017) | 70.12 | 11 | | | | | | | | |
| (001000) | 70.13 | 14 | (001015) | 70.10 | | | | | | |
| (001032) | 70.14 | 15 | (001020) | 70.12 | (001024) | 70.17 | (001020) | 71.01 | | |
| (001033) | 70.15 | 16 | | | | | | | | |
| (001034) | 70.16 | 17 | | | | | | | | |
| (001021) | 70.17 | 12 | (001016) | 70.11 | | | | | | |
| (001025) | 71.01 | 13 | (001015) | 70.10 | | | | | | |
| (001035) | 71.02 | 18 | (001033) | 70.15 | | | | | | |
| (001037) | 71.03 | 19 | (001035) | 70.16 | | | | | | |
| (001043) | 71.06 | | (001046) | 71.00 | | | | | | |
| (001046) | 71.07 | 20 | | | | | | | | |
| (001047) | 71.10 | 9501 | | | | | | | | |
| (001054) | 71.15 | 9502 | (001046) | 71.00 | | | | | | |
| (001055) | 71.17 | 23 | | | | | | | | |
| (001060) | 71.19 | 9521 | | | | | | | | |
| (001062) | 71.21 | 25 | (001060) | 71.16 | | | | | | |
| (001064) | 71.23 | 9522 | | | | | | | | |
| (001066) | 72.01 | 27 | (001066) | 71.16 | | | | | | |
| (001070) | 72.03 | 9523 | | | | | | | | |
| (001072) | 72.05 | 28 | (001067) | 71.18 | (001061) | 71.20 | (001063) | 71.22 | (001067) | 71.24 | (001000) | 72.02 |
| (001076) | 72.07 | | (001070) | 72.00 | | | | | | |
| (001078) | 72.08 | 30 | | | | | | | | |
| (001079) | 72.10 | 31 | (002000) | 73.14 | (002010) | 73.21 | (002022) | 73.22 | (002020) | 74.01 | |
| (001080) | 72.11 | | (001081) | 72.13 | | | | | | |
| (001081) | 72.12 | 32 | | | | | | | | |
| (001083) | 72.15 | 9503 | | | | | | | | |
| (001000) | 72.16 | 34 | (001084) | 72.22 | | | | | | |
| (002023) | 72.23 | 46 | (001082) | 72.14 | (001084) | 72.22 | | | | |
| (002024) | 72.24 | 47 | | | | | | | | |
| (002026) | 72.26 | 48 | | | | | | | | |
| (002026) | 72.26 | | (002025) | 72.27 | | | | | | |
| (002030) | 72.29 | 49 | (002023) | 72.23 | | | | | | |
| (002034) | 72.30 | 50 | (002029) | 72.28 | | | | | | |
| (002036) | 72.31 | | (002042) | 74.00 | | | | | | |
| (002038) | 72.32 | 51 | | | | | | | | |
| (001000) | 73.01 | 35 | (001032) | 70.14 | | | | | | |
| (001000) | 73.02 | 37 | | | | | | | | |
| (001000) | 73.03 | 38 | (001005) | 73.01 | | | | | | |
| (001000) | 73.04 | 39 | (001007) | 73.02 | | | | | | |
| (002001) | 73.05 | 104 | | | | | | | | |
| (002003) | 73.06 | 105 | (002000) | 73.05 | | | | | | |
| (002004) | 73.00 | 107 | (002002) | 73.07 | | | | | | |
| (002000) | 73.11 | | (002000) | 73.13 | | | | | | |
| (002000) | 73.12 | 40 | | | | | | | | |
| (002010) | 73.15 | 9505 | | | | | | | | |
| (002017) | 73.21 | 43 | | | | | | | | |
| (002021) | 73.22 | 45 | (002010) | 73.20 | | | | | | |
| (002019) | 74.01 | 44 | (002015) | 73.20 | | | | | | |
| (002030) | 74.02 | 52 | (002035) | 72.31 | | | | | | |
| (002040) | 74.03 | 53 | (002035) | 72.31 | | | | | | |
| (002041) | 74.04 | 54 | (002037) | 72.32 | (002038) | 74.02 | | | | |
| (002042) | 74.05 | 55 | | | | | | | | |
| (002044) | 74.06 | 9507 | | | | | | | | |
| (002055) | 74.15 | 60 | (002052) | 74.14 | | | | | | |
| (002063) | 74.16 | 59 | | | | | | | | |
| (002070) | 75.01 | 65 | (002057) | 75.13 | | | | | | |
| (002057) | 75.02 | 61 | (002052) | 74.14 | | | | | | |
| (002058) | 75.03 | 62 | (002058) | 74.15 | (002054) | 74.16 | | | | |
| (002050) | 75.05 | 9508 | (002043) | 74.07 | | | | | | |
| (002062) | 75.06 | 63 | | | | | | | | |
| (002062) | 75.0[illegible] | | (002062) | 75.00 | | | | | | |

| CARD ID | PAGE/BOX | NAME | REFERENCES (SOURCE SEQUENCE NO. AND PAGE/BOX) | | | | | | | |
|---|---|---|---|---|---|---|---|---|---|---|
| (002067) | 75.13 | 84 | | | | | | | | |
| (002074) | 75.14 | 160 | (002066) | 75.12 | | | | | | |
| (002075) | 75.15 | 161 | | | | | | | | |
| (002072) | 75.16 | 87 | (002067) | 75.13 | | | | | | |
| (002068) | 75.17 | 85 | | | | | | | | |
| (002070) | 75.18 | 163 | (002074) | 75.14 | | | | | | |
| (002080) | 75.19 | 68 | (002071) | 75.01 | (002076) | 75.15 | (002073) | 75.16 | (002068) 75.17 | (002070) 76.01 |
| (002081) | 75.20 | 89 | | | | | | | | |
| (002087) | 75.22 | 70 | | | | | | | | |
| (002077) | 76.01 | 162 | (002074) | 75.14 | | | | | | |
| (002088) | 76.02 | 71 | (002085) | 75.21 | | | | | | |
| (002083) | 76.03 | 72 | (002080) | 75.19 | | | | | | |
| (002085) | 76.05 | 73 | | | | | | | | |
| (002102) | 76.07 | 74 | (002094) | 76.04 | | | | | | |
| (002100) | 76.08 | 75 | (002088) | 75.22 | (002082) | 76.02 | (002101) | 76.08 | | |
| (002110) | 76.10 | 76 | (002234) | 79.30 | | | | | | |
| (002115) | 76.12 | 77 | | | | | | | | |
| (002116) | 76.13 | 78 | | | | | | | | |
| (002125) | 76.14 | 81 | (002114) | 76.11 | | | | | | |
| (002127) | 76.15 | 82 | (002118) | 76.13 | (002121) | 76.20 | (002124) | 76.21 | | |
| (002135) | 76.19 | 83 | (002134) | 76.18 | | | | | | |
| (002119) | 76.20 | 79 | (002115) | 76.12 | | | | | | |
| (002122) | 76.21 | 80 | (002114) | 76.11 | | | | | | |
| (002137) | 76.22 | 84 | (002134) | 76.18 | | | | | | |
| (002138) | 76.23 | 85 | (002134) | 76.18 | | | | | | |
| (002142) | 76.24 | 86 | (002134) | 76.18 | (002134) | 76.18 | | | | |
| (002144) | 76.25 | 87 | (002138) | 76.19 | (002138) | 76.22 | (002141) | 76.23 | | |
| (002146) | 76.27 | | (002152) | 77.02 | | | | | | |
| (002149) | 76.29 | 88 | | | | | | | | |
| (002150) | 77.01 | 89 | (002147) | 76.28 | | | | | | |
| (002152) | 77.02 | 90 | (002149) | 76.29 | | | | | | |
| (002194) | 77.04 | 9509 | | | | | | | | |
| (002190) | 77.08 | 9510 | (002153) | 77.03 | | | | | | |
| (002162) | 77.11 | | (002108) | 76.08 | | | | | | |
| (002163) | 77.12 | 93 | (002162) | 77.11 | | | | | | |
| (002166) | 77.13 | 94 | (002174) | 77.16 | | | | | | |
| (002167) | 77.14 | 95 | | | | | | | | |
| (002169) | 77.15 | 96 | (002168) | 77.13 | | | | | | |
| (002171) | 77.16 | 97 | (002162) | 77.11 | | | | | | |
| (002175) | 77.17 | 98 | (002162) | 77.11 | | | | | | |
| (002240) | 78.01 | 110 | (002195) | 78.10 | | | | | | |
| (002180) | 78.02 | 99 | (002162) | 77.11 | (002162) | 77.11 | | | | |
| (002184) | 78.03 | 100 | (002168) | 77.14 | (002170) | 77.15 | (002178) | 77.17 | | |
| (002188) | 78.05 | 101 | | | | | | | | |
| (002235) | 78.11 | 108 | (002195) | 78.10 | | | | | | |
| (002196) | 78.01 | 102 | (002277) | 80.17 | | | | | | |
| (002197) | 78.02 | 103 | | | | | | | | |
| (002201) | 78.04 | 9511 | | | | | | | | |
| (002208) | 78.07 | 9512 | (002200) | 78.03 | | | | | | |
| (002208) | 78.09 | | (002226) | 78.23 | | | | | | |
| (002212) | 78.12 | 9513 | | | | | | | | |
| (002208) | 78.13 | 126 | (002195) | 78.01 | (002277) | 80.17 | | | | |
| (002215) | 78.18 | 9514 | (002211) | 78.11 | | | | | | |
| (002218) | 78.19 | 9515 | | | | | | | | |
| (002221) | 78.22 | 9516 | (002217) | 78.18 | | | | | | |
| (002222) | 78.23 | 107 | | | | | | | | |
| (002225) | 78.26 | 108 | | | | | | | | |
| (002225) | 78.26 | | (002225) | 78.27 | | | | | | |
| (002245) | 80.01 | 111 | (002195) | 78.10 | | | | | | |
| (002246) | 80.02 | 112 | | | | | | | | |
| (002251) | 80.03 | 113 | (002245) | 80.01 | | | | | | |
| (002255) | 80.04 | 114 | (002244) | 78.01 | (002238) | [illegible] | (002250) | 80.02 | | |
| (002262) | 80.08 | 115 | | | | | | | | |
| (002266) | 80.09 | 116 | (002261) | 80.07 | | | | | | |
| (002267) | 80.10 | 117 | (002264) | 80.08 | | | | | | |
| (002268) | 80.11 | 118 | | | | | | | | |
| (002270) | 80.12 | 119 | (002267) | 80.10 | | | | | | |
| (002271) | 80.13 | 120 | (002269) | 80.11 | | | | | | |
| (002278) | 80.16 | 121 | (002261) | 80.07 | | | | | | |
| (002278) | 80.18 | 122 | (002283) | 81.03 | | | | | | |
| (002278) | 80.19 | 123 | | | | | | | | |
| (002280) | 81.01 | 124 | (002277) | 80.17 | | | | | | |

| CARD ID | PAGE/BOX | NAME | REFERENCES (SOURCE SEQUENCE NO. AND PAGE/BOX) | | | |
|---|---|---|---|---|---|---|
| (002276) | 01.04 | 125 | (002277) 00.17 | (002277) 00.17 | | |
| (002278) | 01.06 | 127 | (002278) 00.18 | (002278) 00.19 | (002283) 01.03 | |
| (002279) | 01.07 | 128 | | | | |
| (002283) | 01.08 | 129 | (002290) 01.08 | | | |
| (002285) | 01.09 | 130 | (002275) 00.15 | (002278) 00.19 | (002287) 01.05 | |
| (002286) | 01.10 | 9517 | | | | |
| (002287) | 01.11 | 131 | | | | |
| (002288) | 01.12 | 132 | (002330) 02.08 | | | |
| (002289) | 01.13 | 133 | (002343) 02.14 | | | |
| (002290) | 01.14 | 134 | (002288) 01.10 | (002287) 01.11 | | |
| (002310) | 01.18 | | (002313) 01.21 | | | |
| (002313) | 01.19 | 135 | | | | |
| (002316) | 01.23 | 138 | | | | |
| (002317) | 01.24 | 139 | | | | |
| (002320) | 02.02 | | (002329) 02.06 | | | |
| (002329) | 02.03 | 141 | | | | |
| (002330) | 02.06 | 142 | (002316) 01.23 | | | |
| (002331) | 02.07 | 143 | (002288) 01.12 | | | |
| (002338) | 02.10 | | (002342) 02.13 | | | |
| (002342) | 02.11 | 145 | | | | |
| (002344) | 02.15 | 146 | (002290) 01.13 | | | |
| (002352) | 02.18 | | (002360) 02.21 | | | |
| (002355) | 02.19 | 148 | | | | |
| (002356) | 02.22 | 9518 | (002295) 01.00 | | | |
| (002357) | 02.23 | 149 | (002290) 01.13 | (002315) 01.22 | | |

CHART TITLE - NON-PROCEDURAL STATEMENTS

CHART TITLE - INTRODUCTORY COMMENTS

CHART TITLE - SUBROUTINE MAMET

| | | | | | | |
|---|---|---|---|---|---|---|
| (002386) | 05.01 | MAMET | (000374) 12.02-X | | | |
| (002408) | 05.04 | 4005 | (002388) 05.03 | | | |
| (002417) | 05.05 | 4006 | (002408) 05.04 | (002441) 06.22 | | |
| (002420) | 05.06 | 4007 | (002417) 05.05 | (002441) 06.22 | | |
| (002388) | 05.01 | 4001 | (002388) 05.03 | | | |
| (002408) | 05.04 | 4002 | (002408) 05.04 | | | |
| (002412) | 05.06 | 4012 | | | | |
| (002412) | 05.06 | | (002412) 05.07 | | | |
| (002419) | 05.09 | 4003 | (002417) 05.05 | | | |
| (002423) | 05.11 | 4013 | | | | |
| (002423) | 05.11 | | (002423) 05.12 | | | |
| (002430) | 05.14 | 4004 | (002420) 05.06 | | | |
| (002434) | 05.16 | 4014 | | | | |
| (002434) | 05.16 | | (002434) 05.17 | | | |
| (002438) | 05.19 | 4010 | (002404) 05.03 | (002419) 05.09 | (002422) 05.13 | |
| (002438) | 05.20 | 4011 | | | | |
| (002438) | 05.20 | | (002438) 05.21 | | | |
| (002443) | 05.23 | 4020 | (002420) 05.06 | (002441) 06.22 | (002441) 06.22 | |
| (002454) | 07.01 | 400 | (002452) 06.25 | | | |
| (002458) | 07.02 | 401 | (002454) 07.01 | | | |
| (002460) | 07.04 | | (002508) 07.17 | | | |
| (002508) | 07.16 | 403 | | | | |
| (002511) | 07.18 | | (002513) 07.21 | | | |
| (002513) | 07.20 | 4030 | | | | |
| (002517) | 07.22 | 402 | (002452) 06.25 | (002454) 07.01 | | |
| (002531) | 08.01 | 402 | (002520) 07.24 | | | |
| (002537) | 08.03 | | (002551) 08.13 | | | |
| (002538) | 08.05 | 207 | | | | |
| (002543) | 08.06 | 208 | (002538) 08.04 | | | |
| (002544) | 08.07 | 214 | | | | |
| (002545) | 08.08 | 211 | | | | |
| (002548) | 08.09 | 210 | (002538) 08.05 | (002543) 08.06 | (002544) 08.07 | |
| (002548) | 08.10 | 212 | (002545) 08.08 | | | |
| (002548) | 08.11 | 213 | (002547) 08.08 | (002542) 08.01 | | |
| (002551) | 08.12 | 404 | | | | |
| (002555) | 08.15 | | (002557) 08.17 | | | |
| (002557) | 08.16 | 4040 | | | | |
| (002551) | 08.18 | 405 | (002520) 07.24 | | | |
| (002541) | 08.01 | 209 | (002538) 08.05 | | | |

| CARD ID | PAGE/BOX | NAME | REFERENCES (SOURCE SEQUENCE NO. AND PAGE/BOX) | | | | | |
|---|---|---|---|---|---|---|---|---|
| (002563) | 00.02 | 407 | (002561) | 00.10 | | | | |
| (002569) | 00.04 | | (002577) | 00.12 | | | | |
| (002571) | 00.06 | 219 | | | | | | |
| (002572) | 00.07 | 221 | | | | | | |
| (002573) | 00.08 | 220 | (002570) | 00.05 | (002571) | 00.06 | | |
| (002575) | 00.09 | 222 | (002572) | 00.07 | | | | |
| (002576) | 00.10 | 223 | (002574) | 00.08 | | | | |
| (002577) | 00.11 | 409 | | | | | | |
| (002581) | 00.14 | | (002582) | 00.16 | | | | |
| (002582) | 00.15 | 4000 | | | | | | |
| (002585) | 00.17 | 410 | (002581) | 00.16 | | | | |
| (002588) | 00.18 | 412 | (002586) | 00.17 | | | | |
| (002594) | 00.20 | | (002602) | 00.04 | | | | |
| (002595) | 00.22 | 216 | | | | | | |
| (002597) | 00.23 | 231 | | | | | | |
| (002598) | 00.24 | 230 | (002595) | 00.21 | (002595) | 00.22 | | |
| (002600) | 00.01 | 232 | (002597) | 00.23 | | | | |
| (002601) | 00.02 | 233 | (002598) | 00.24 | | | | |
| (002602) | 00.03 | 414 | | | | | | |
| (002606) | 00.06 | | (002607) | 00.00 | | | | |
| (002607) | 00.07 | 4140 | | | | | | |
| (002610) | 00.09 | 420 | (002586) | 00.17 | | | | |
| (002613) | 00.11 | 5501 | | | | | | |
| (002620) | 00.14 | 452 | (002610) | 00.13 | | | | |
| (002657) | 00.20 | 456 | (002610) | 00.13 | | | | |
| (002658) | 01.01 | 462 | (002657) | 00.20 | | | | |
| (002664) | 01.15 | 464 | | | | | | |
| (002665) | 01.16 | 466 | (002664) | 01.15 | | | | |
| (002701) | 01.17 | 465 | (002657) | 00.20 | (002664) | 01.15 | | |
| (002703) | 02.01 | 472 | (002701) | 01.17 | | | | |
| (002708) | 02.15 | 5502 | (002612) | 00.10 | (002701) | 01.17 | | |
| (002735) | 02.17 | 3001 | | | | | | |
| (002738) | 02.18 | 3002 | | | | | | |
| (002737) | 02.19 | 3003 | | | | | | |
| (002740) | 02.20 | 3004 | (002734) | 02.16 | (002735) | 02.17 | (002738) 02.18 | (002737) 02.19 |
| (002743) | 02.22 | 3005 | (002737) | 02.19 | | | | |

CHART TITLE - NON-PROCEDURAL STATEMENTS

| LOCATION | | DIAGNOSTIC |
|---|---|---|
| CARD ID | PAGE/BOX | |
| (000030) | 2.02 | UNRECOGNIZED SYNTAX |
| (000055) | 2.10 | UNDEFINED - 'READMS' EXTERNAL REFERENCE |
| (000056) | 2.19 | UNDEFINED - 'READMS' EXTERNAL REFERENCE |
| (000057) | 2.20 | UNDEFINED - 'READMS' EXTERNAL REFERENCE |
| (000058) | 2.21 | UNDEFINED - 'READMS' EXTERNAL REFERENCE |
| (000059) | 2.30 | UNDEFINED - 'READMS' EXTERNAL REFERENCE |
| (000060) | 2.31 | UNDEFINED - 'READMS' EXTERNAL REFERENCE |
| (000061) | 2.32 | UNDEFINED - 'READMS' EXTERNAL REFERENCE |
| (000401) | 3.19 | UNRECOGNIZED SYNTAX |
| (000036) | 30.01 | UNDEFINED - 'READMS' EXTERNAL REFERENCE |
| (000037) | 30.02 | UNDEFINED - 'READMS' EXTERNAL REFERENCE |
| (000038) | 30.03 | UNDEFINED - 'READMS' EXTERNAL REFERENCE |
| (000039) | 30.04 | UNDEFINED - 'READMS' EXTERNAL REFERENCE |
| (000040) | 30.05 | UNDEFINED - 'READMS' EXTERNAL REFERENCE |
| (001088) | 37.14 | UNDEFINED - 'WRITMS' EXTERNAL REFERENCE |
| (001245) | 40.18 | UNDEFINED - 'WRITMS' EXTERNAL REFERENCE |
| (001283) | 40.18 | UNDEFINED - 'WRITMS' EXTERNAL REFERENCE |
| (001285) | 40.19 | UNDEFINED - 'READMS' EXTERNAL REFERENCE |
| (001705) | 61.16 | UNDEFINED - 'WRITMS' EXTERNAL REFERENCE |
| (002300) | 65.01 | UNDEFINED - 'READMS' EXTERNAL REFERENCE |
| (002301) | 65.02 | UNDEFINED - 'READMS' EXTERNAL REFERENCE |
| (002740) | 82.20 | UNDEFINED - 'WRITMS' EXTERNAL REFERENCE |
| (002741) | 82.21 | UNDEFINED - 'WRITMS' EXTERNAL REFERENCE |

MODULE FLOW CHARTS

CHART TITLE - INTRODUCTORY COMMENTS

PROGRAM BLCNTL IS LINK 4 OF SWEEP

DETERMINES BASIC AIRLOAD CONDITIONS TO BE COMPUTED OR AND WING
BENDING MOMENT FATIGUE SPECTRA
PROVIDES LOGIC AND CONTROL FOR THE AIRLOAD SUBROUTINES

CHART TITLE - PROCEDURES

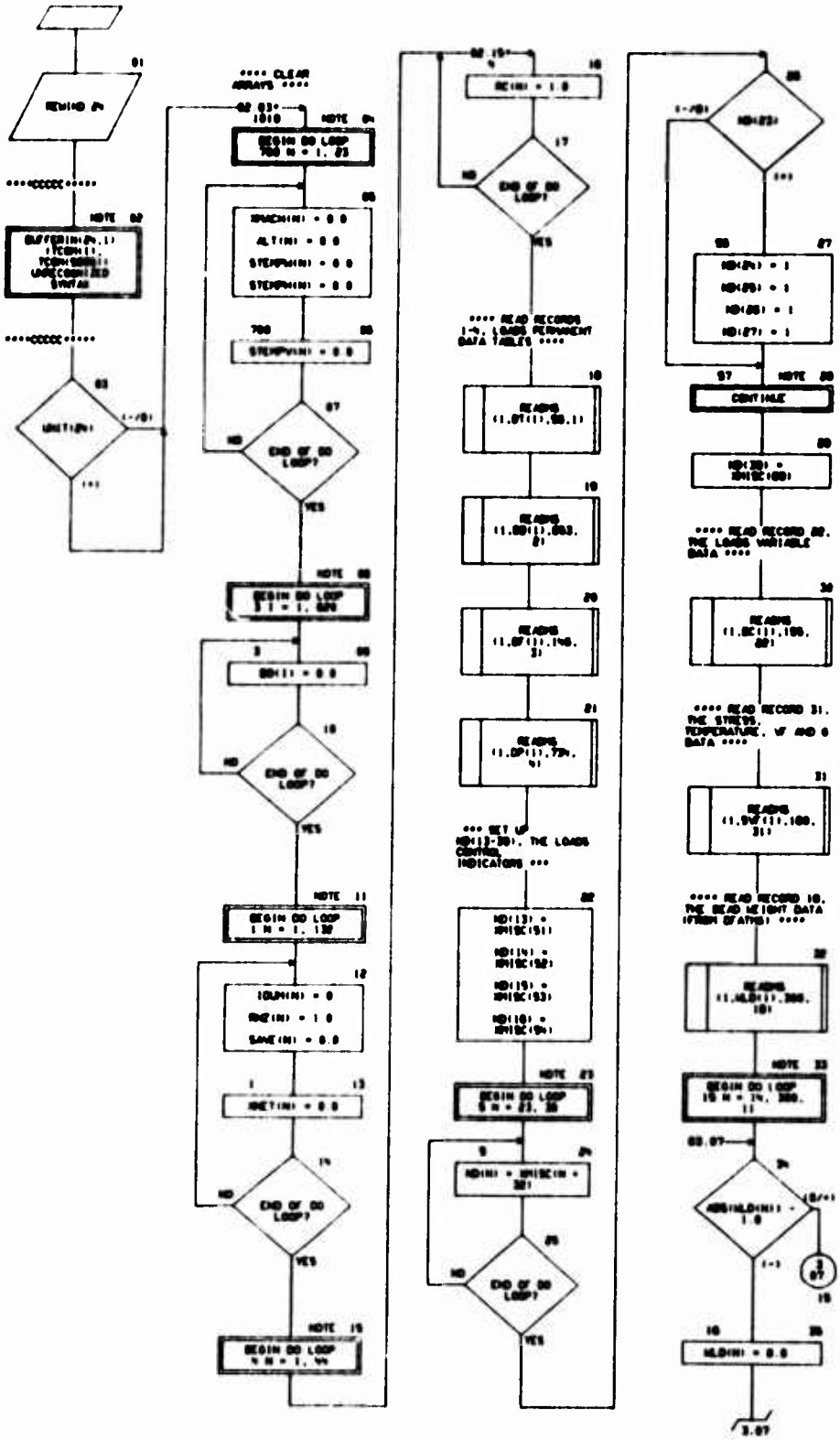

CHART TITLE - PROCEDURES

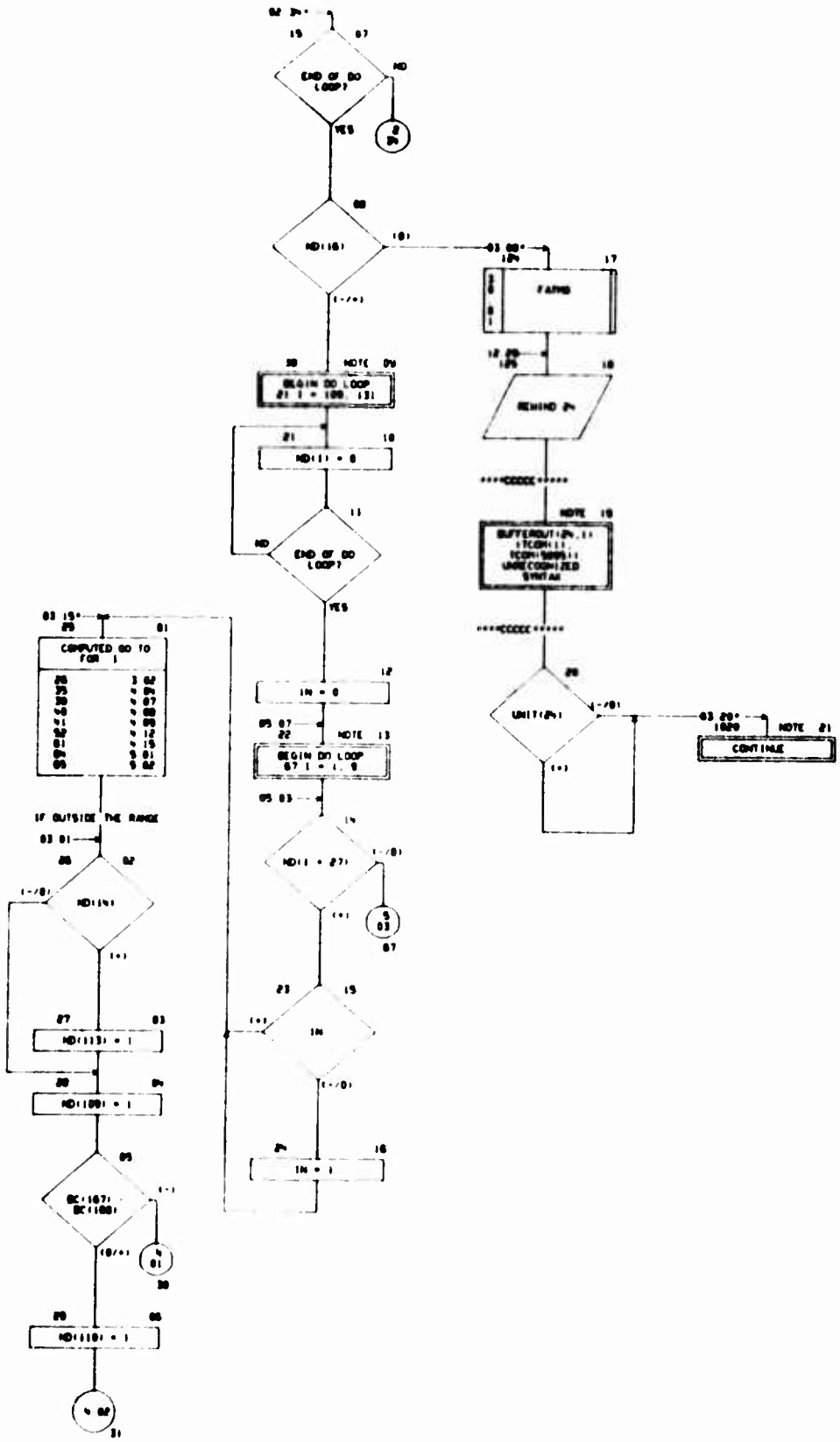

CHART TITLE - PROCEDURES

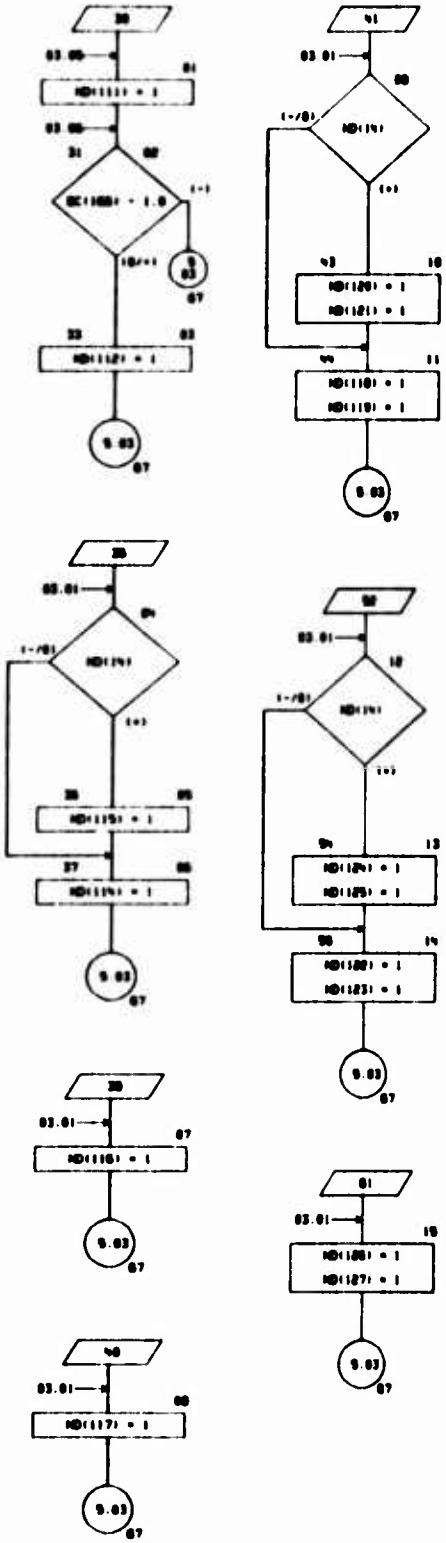

CHART TITLE - PROCEDURES

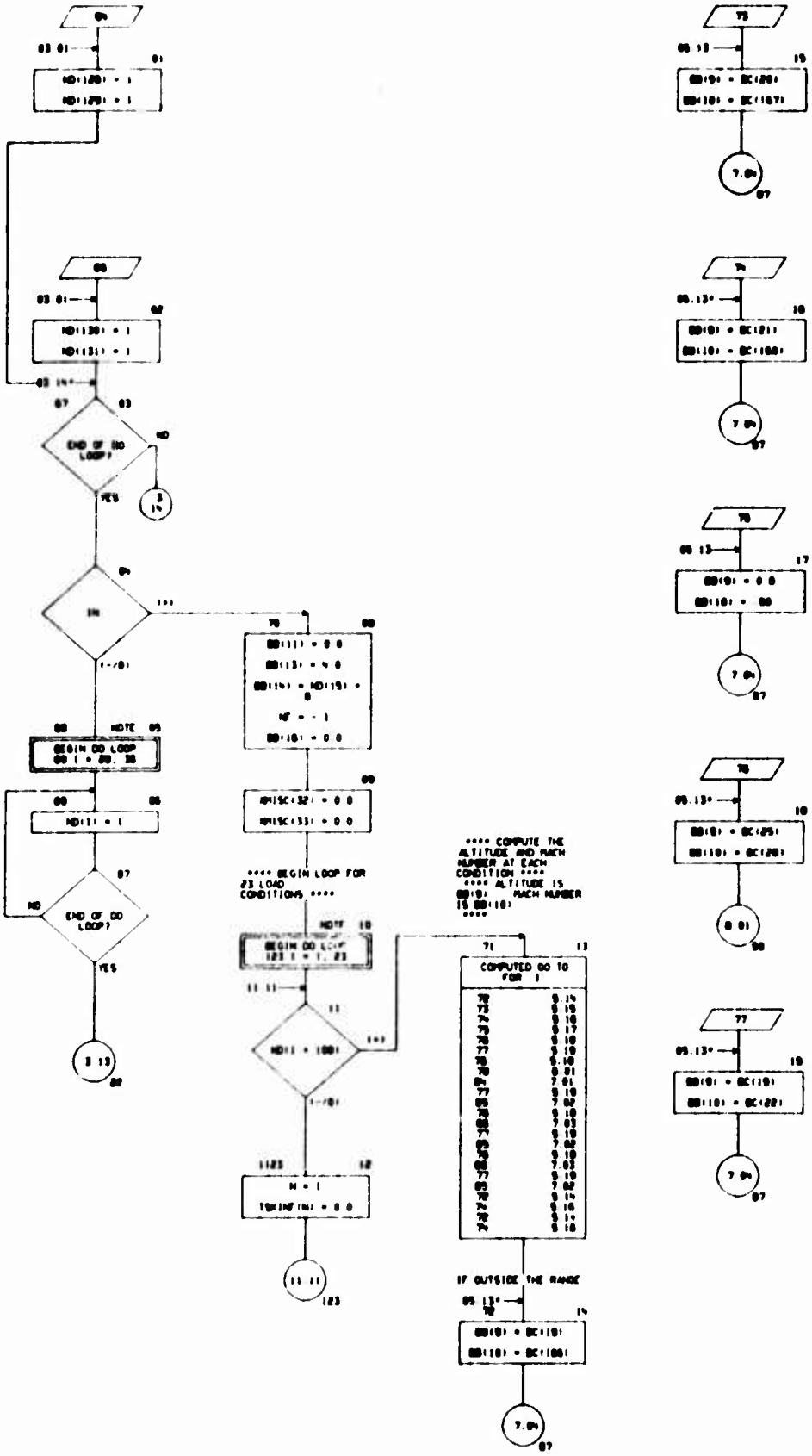

CHART TITLE - PROCEDURES

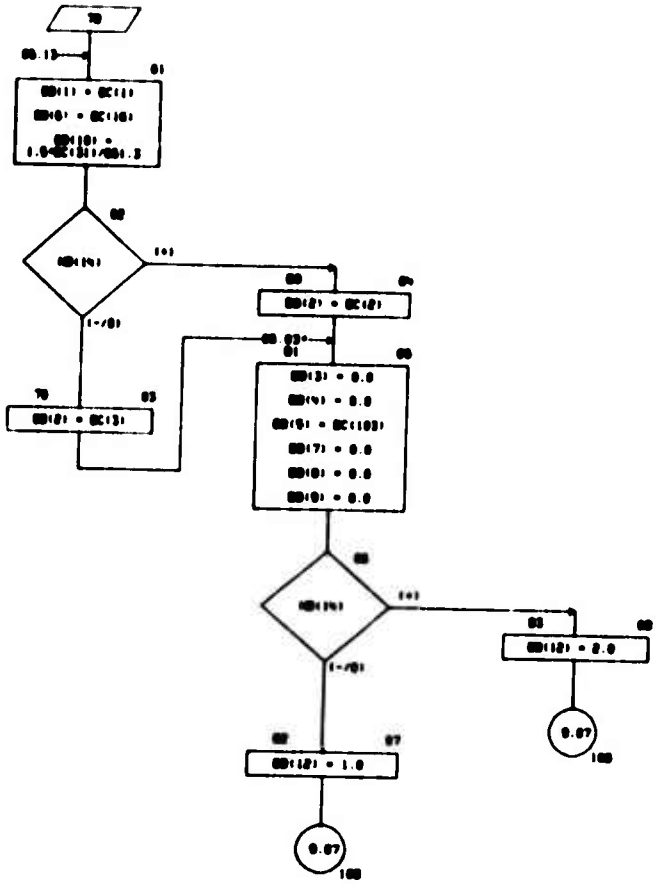

CHART TITLE - PROCEDURES

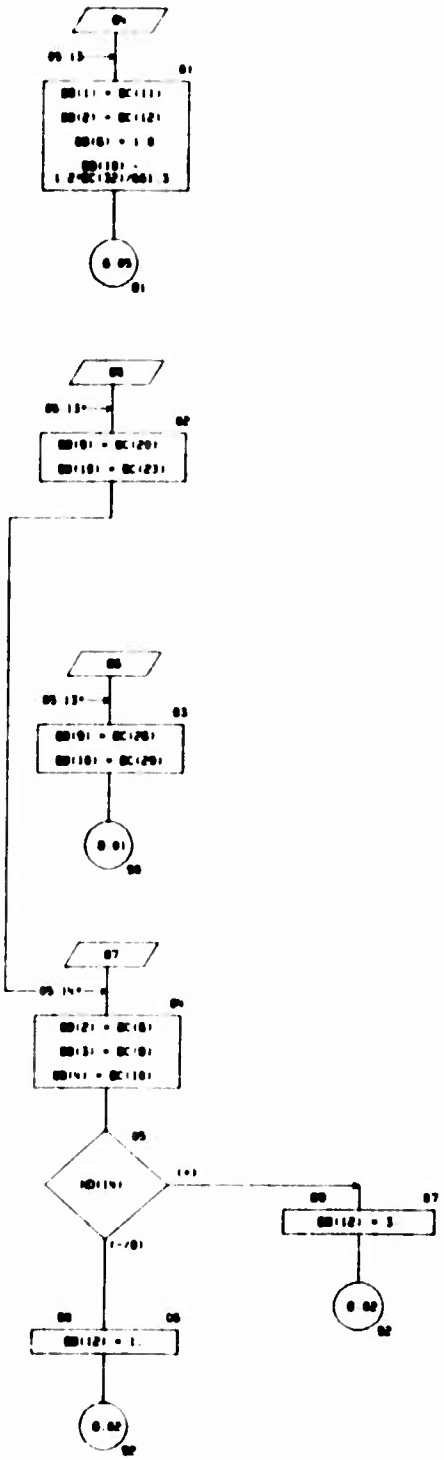

CHART TITLE - PROCEDURES

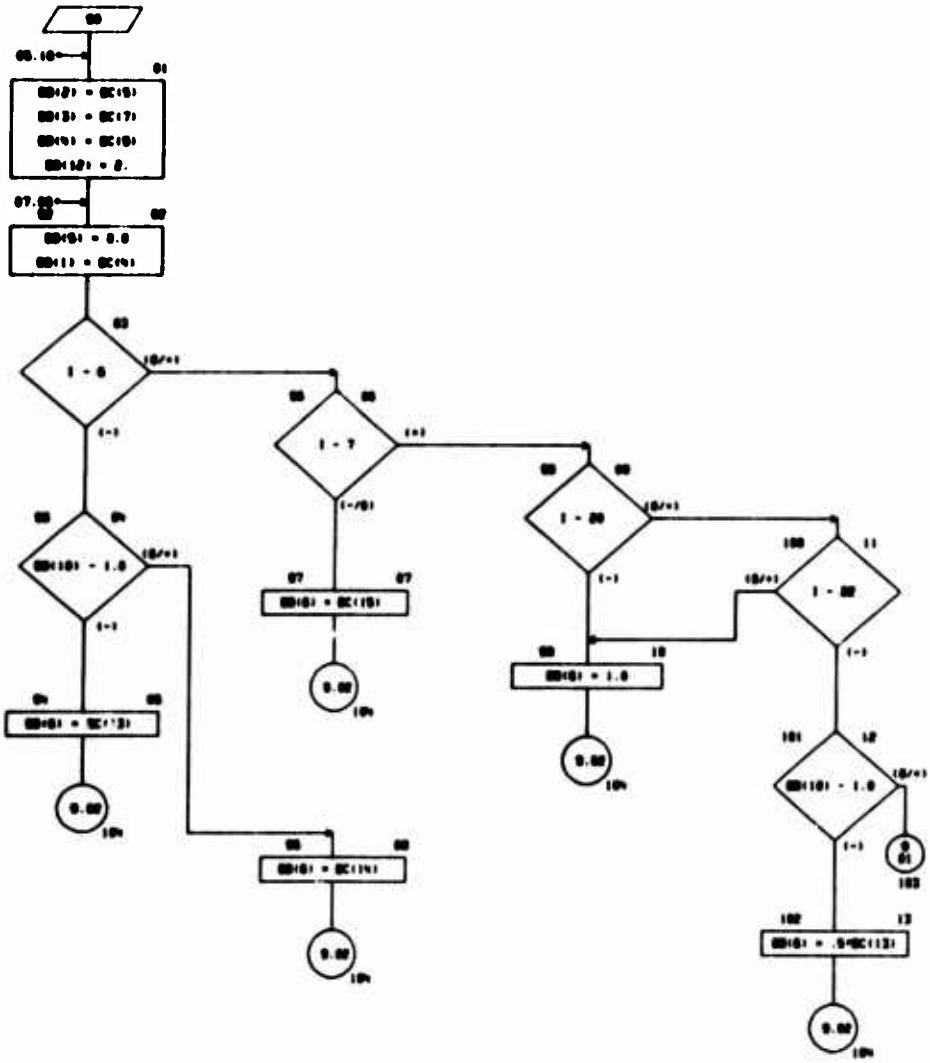

CHART TITLE - PROCEDURES

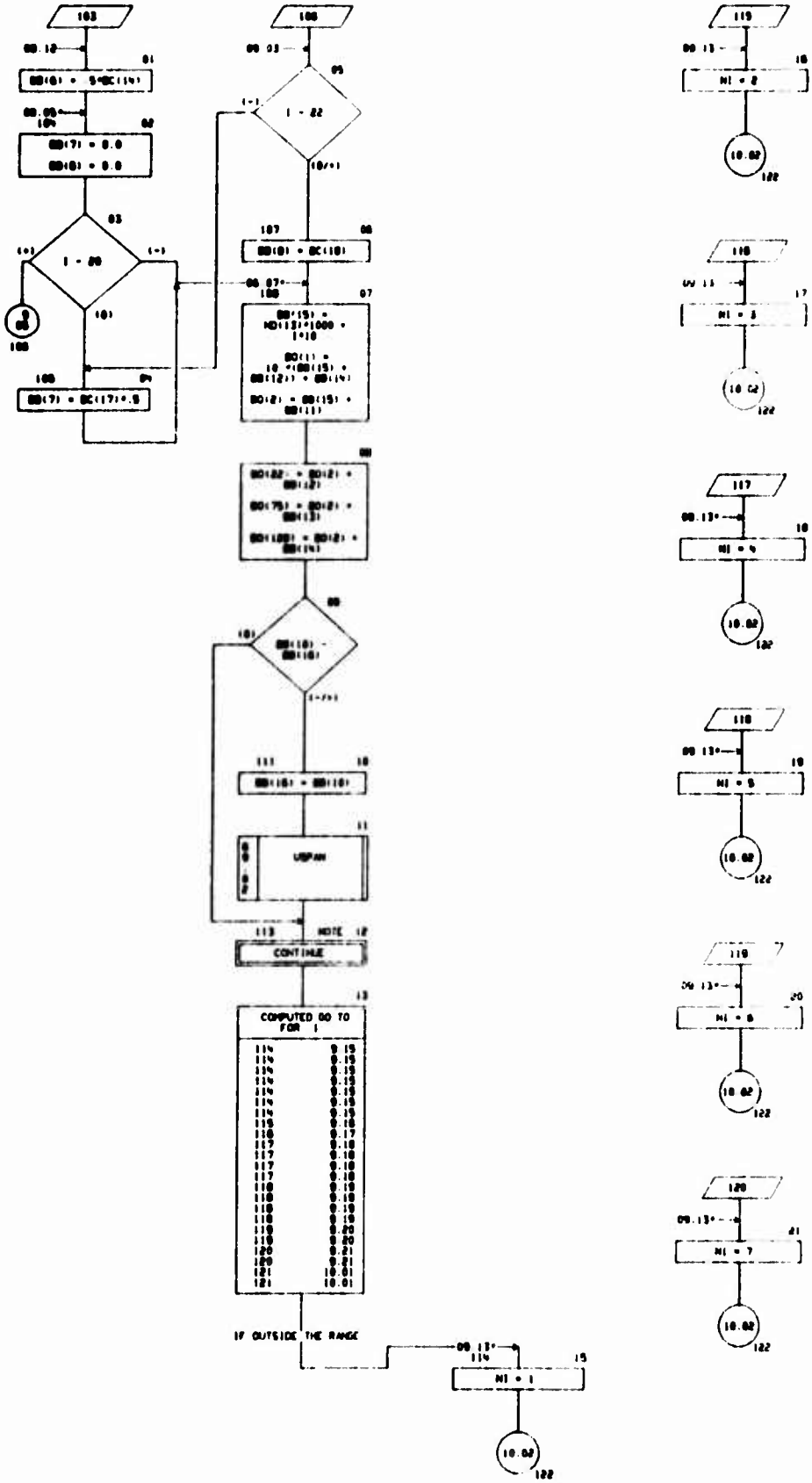

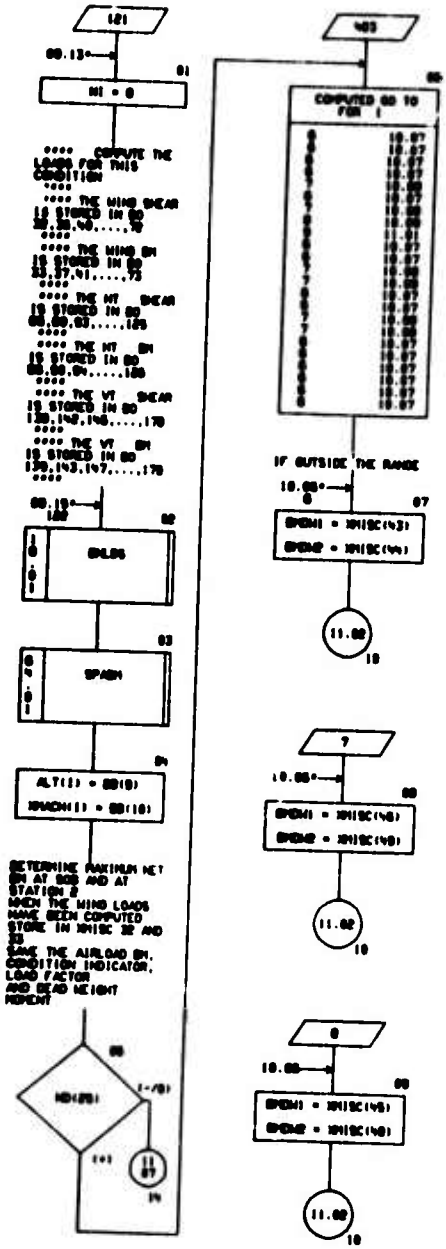
121
NI = 0
COMPUTE THE LOADS FOR THIS CONDITION
THE WING SHEAR IS STORED IN BD
THE WING BM IS STORED IN BD
THE HT SHEAR IS STORED IN BD
THE HT BM IS STORED IN BD
THE VT SHEAR IS STORED IN BD
THE VT BM IS STORED IN BD
BNLDS
SPABM
ALT(I) = BD(9)
XMACH(I) = BD(10)
DETERMINE MAXIMUM NET BM AT SOB AND AT STATION 2
WHEN THE WING LOADS HAVE BEEN COMPUTED STORE IN XMISC 32 AND 33
SAVE THE AIRLOAD BM, CONDITION INDICATOR, LOAD FACTOR AND DEAD WEIGHT MOMENT
ND(25)
COMPUTED GO TO FOR I
IF OUTSIDE THE RANGE
BMDW1 = XMISC(43)
BMDW2 = XMISC(44)
BMDW1 = XMISC(46)
BMDW2 = XMISC(45)
BMDW1 = XMISC(45)
BMDW2 = XMISC(40)

CHART TITLE - PROCEDURES

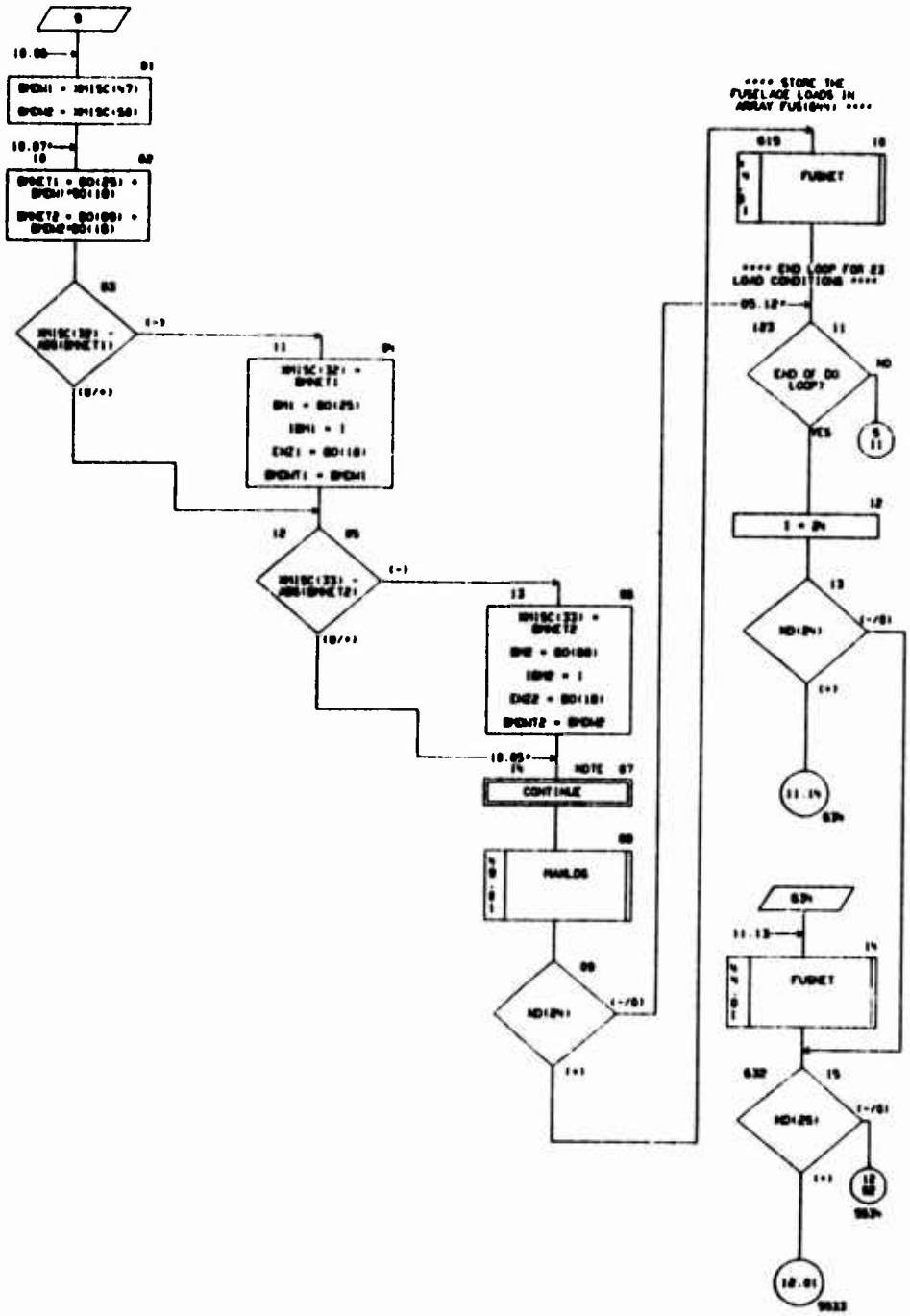

CHART TITLE - PROCEDURES

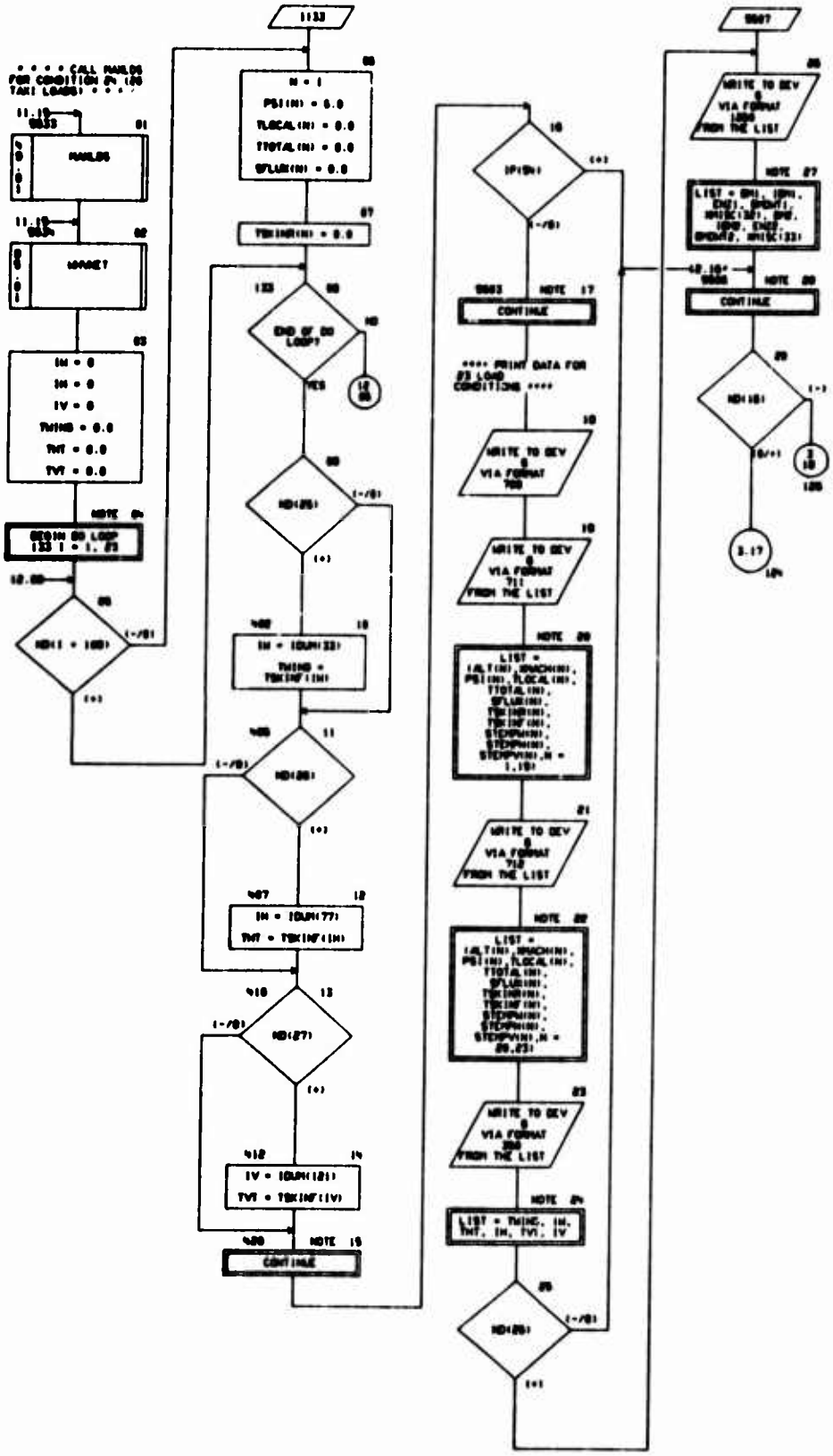

CHART TITLE - NON-PROCEDURAL STATEMENTS

```
      PROGRAM BLCNTL
      COMMON TCOM(4400),ALD(300),IBUN(12),SAME(12),NET(12),
       BNZ(12),RC(44),SVF(100),STEMPH(23),STEMPM(23),STEMPV(23),
       BUN(96)
      ,SAMET(96)
      COMMON /IPRINT/IP(80)
      COMMON /MISC/ IMISC(100)
      DIMENSION ND(200),BD(620),BC(100),BB(20),BT(96),BB(863),BF(140),BP
      (734)
      DIMENSION PSI(23),TLOCAL(23),TTOTAL(23),SFLUX(23),TSKIN(23)
      DIMENSION XMACH(23),ALT(23),TSKINF(23)
      EQUIVALENCE (ND(1),TCOM(420)),(BD(1),TCOM(330)),(BC(1),TCOM(2750
      )),(BB(1),TCOM(2863)),(1,ND(10)),
        (IN,ND(105)),(NI,ND(106)),(NF,ND(108)),(BT(1),TCOM(100)),(BB(1
      ),TCOM(190)),(BF(1),TCOM(800)),(BP(1),TCOM(1106))
      EQUIVALENCE (ALT(1),BD(20)),(XMACH(1),BD(24))
      EQUIVALENCE (SVF(110),TSKINF(1))
      EQUIVALENCE            (SVF( 1),PSI   (1)),(SVF( 24),TLOCAL(1)),
       (SVF( 47),TTOTAL(1)),(SVF( 70),SFLUX (1)),(SVF( 93),TSKIN(1))
700   FORMAT(1H1,88X,21H** BLCNTL - IP(9) ***/
                 3X,14HLOAD CONDITION, 6X,8HALTITUDE,2X,4HMACH,
          4X,8HPRESSURE,1X,10HLOCAL TEMP,1X,10HTOTAL TEMP,2X,
          8HSUN FLUX,1X,8HSKIN TEMP,1X,8HSKIN TEMP,3X,8HSTRESS,
          4X,8HSTRESS,4X,8HSTRESS/    20X,4HFEET,3X,8HNUMBER,
                    6X,3HPSI,7X,8DEG R,6X,8DEG R,3X,10HBTU/HR/FT2,
          2X,8DEG R,5X,8DEG F, 6X,4HHING,3X,10HHORIZONTAL,
          1X,8HVERTICAL/)
711   FORMAT(
       8BN  1 -HZ BALANCED       ,F8.0,F8.4,F10.2,2F11.1,3F10.1,3F10.0/
       8BN  2 -HZ BALANCED       ,F8.0,F8.4,F10.2,2F11.1,3F10.1,3F10.0/
       8BN  3 -HZ BALANCED       ,F8.0,F8.4,F10.2,2F11.1,3F10.1,3F10.0/
       8BN  4 -HZ BALANCED       ,F8.0,F8.4,F10.2,2F11.1,3F10.1,3F10.0/
       8BN  5 -HZ BALANCED       ,F8.0,F8.4,F10.2,2F11.1,3F10.1,3F10.0/
       8BN  6 -HZ BALANCED       ,F8.0,F8.4,F10.2,2F11.1,3F10.1,3F10.0/
       8BN  7 -HZ BALANCED       ,F8.0,F8.4,F10.2,2F11.1,3F10.1,3F10.0/
       8BN  8 FLAP DOWN MANEUVER,F8.0,F8.4,F10.2,2F11.1,3F10.1,3F10.0/
       8BN  9 FLAP DOWN 1 G TRIM,F8.0,F8.4,F10.2,2F11.1,3F10.1,3F10.0/
       8BN 10 + VERTICAL GUST    ,F8.0,F8.4,F10.2,2F11.1,3F10.1,3F10.0/
       8BN 11 + VERTICAL GUST    ,F8.0,F8.4,F10.2,2F11.1,3F10.1,3F10.0/
       8BN 12 + VERTICAL GUST    ,F8.0,F8.4,F10.2,2F11.1,3F10.1,3F10.0/
       8BN 13 + VERTICAL GUST    ,F8.0,F8.4,F10.2,2F11.1,3F10.1,3F10.0/
       8BN 14 - VERTICAL GUST    ,F8.0,F8.4,F10.2,2F11.1,3F10.1,3F10.0/
       8BN 15 - VERTICAL GUST    ,F8.0,F8.4,F10.2,2F11.1,3F10.1,3F10.0/
       8BN 16 - VERTICAL GUST    ,F8.0,F8.4,F10.2,2F11.1,3F10.1,3F10.0/
       8BN 17 - VERTICAL GUST    ,F8.0,F8.4,F10.2,2F11.1,3F10.1,3F10.0/
       8BN 18 LATERAL GUST       ,F8.0,F8.4,F10.2,2F11.1,3F10.1,3F10.0/
       8BN 19 LATERAL GUST       ,F8.0,F8.4,F10.2,2F11.1,3F10.1,3F10.0)
712   FORMAT(
       8BN 20 PITCH ACCELERATION,F8.0,F8.4,F10.2,2F11.1,3F10.1,3F10.0/
       8BN 21 PITCH ACCELERATION,F8.0,F8.4,F10.2,2F11.1,3F10.1,3F10.0/
       8BN 22 YAW   ACCELERATION,F8.0,F8.4,F10.2,2F11.1,3F10.1,3F10.0/
       8BN 23 YAW   ACCELERATION,F8.0,F8.4,F10.2,2F11.1,3F10.1,3F10.0)
350   FORMAT(// 50X,10HDESIGN TEMPERATURE,2X,9HCONDITION//38X,4HHING,
        12X,F8.1,14X,12/38X,10HHORIZONTAL,6X,F8.1,14X,12/38X,8HVERTICAL,
        6X,F8.1,14X,12)
1000  FORMAT(//   38X,47H*** MAXIMUM NET BENDING MOMENTS FOR FATIGUE ***
       //   34X,8HBN AT 908,3X,9HCONDITION,3X,8HNZ,3X,13HINERTIA BN/NZ,
       3X,13HNET BN AT 908  /38X,F13.0,6X,12,5X,F9.2,2X,F13.0,3X,F13.0//
       38X,15H    BN AT STA 2,3X,9HCONDITION,3X,8HNZ,3X,13HINERTIA BN/NZ
       ,2X,13HNET BN AT STA 2/38X,F13.0,6X,12,5X,F9.2,2X,F13.0,3X,F13.0)
```

CHART TITLE - INTRODUCTORY COMMENTS

```
***************  ******************************************************
                      SUBROUTINE [illegible]
**********************************************************************
```

CHART TITLE - SUBROUTINE ATMOS(H,RHOH,PH,AH)

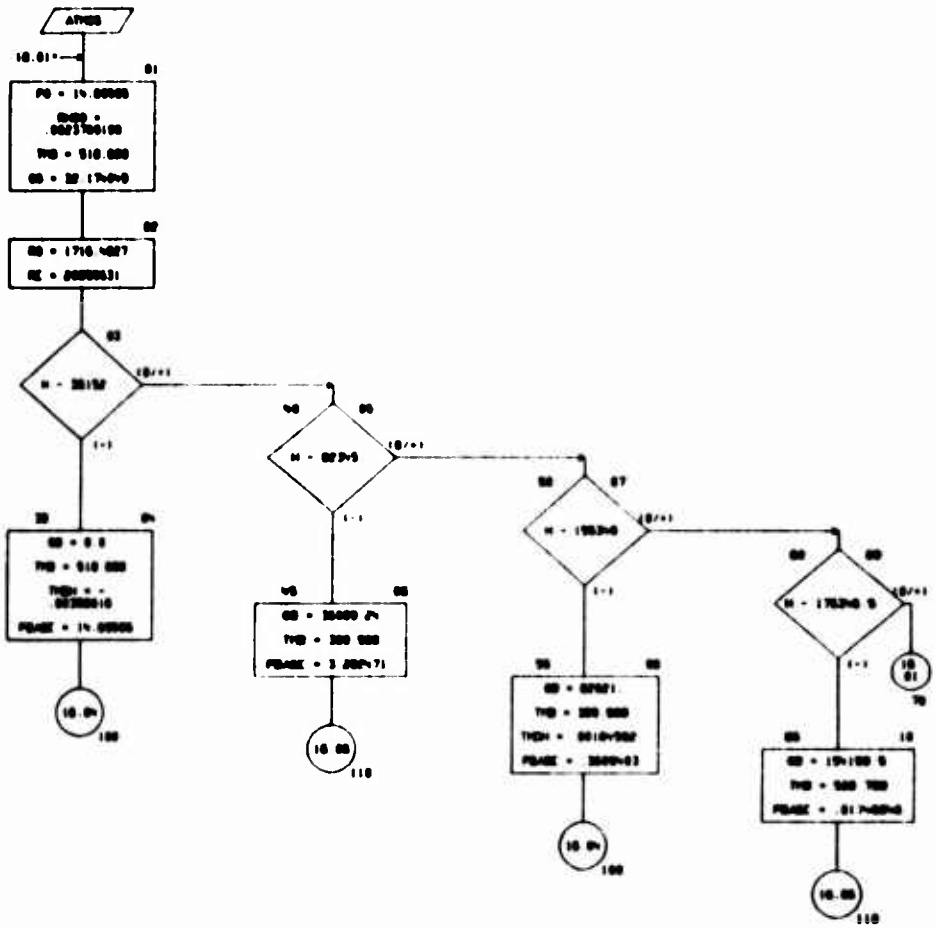

CHART TITLE - SUBROUTINE ATMOS(H,RHOH,PH,AH)

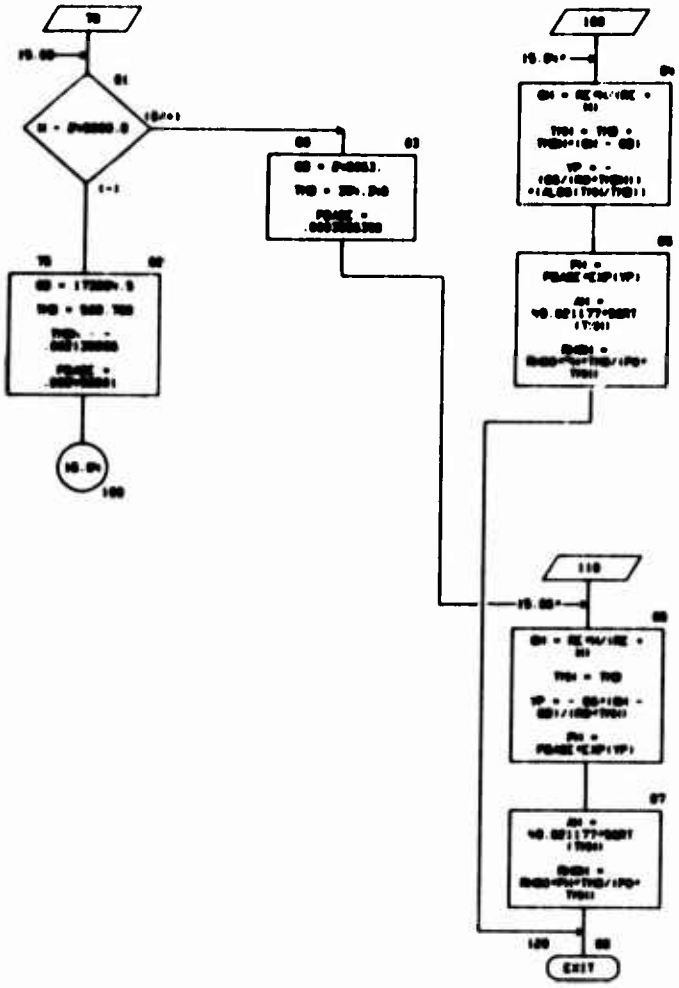

CHART TITLE - INTRODUCTORY COMMENTS

SUBROUTINE BHLDS

CHART TITLE - SUBROUTINE DALDS

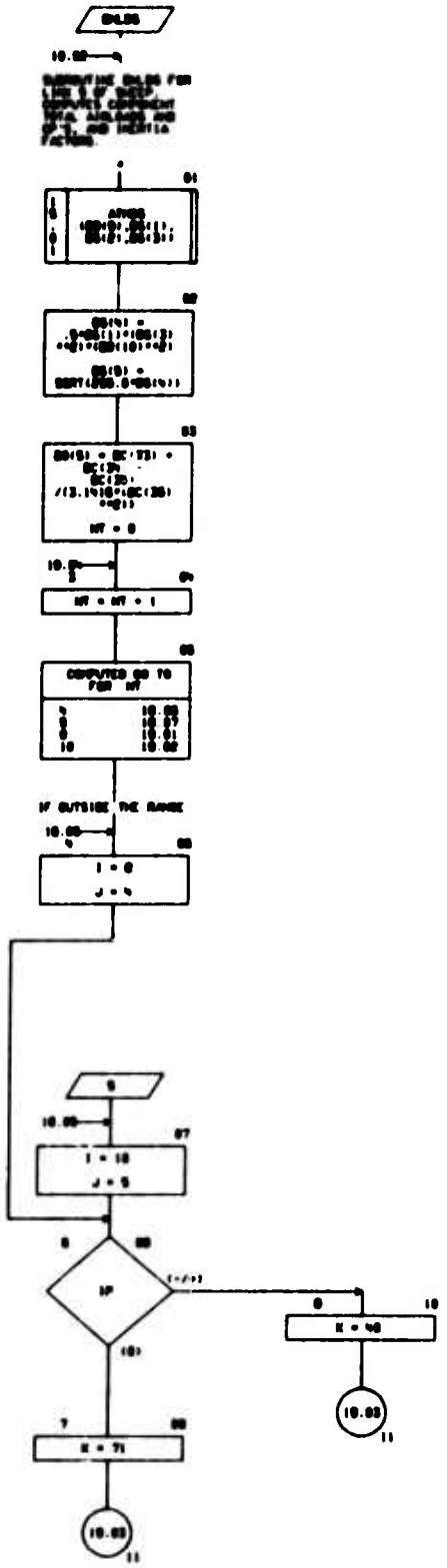

CHART TITLE - SUBROUTINE BKDS

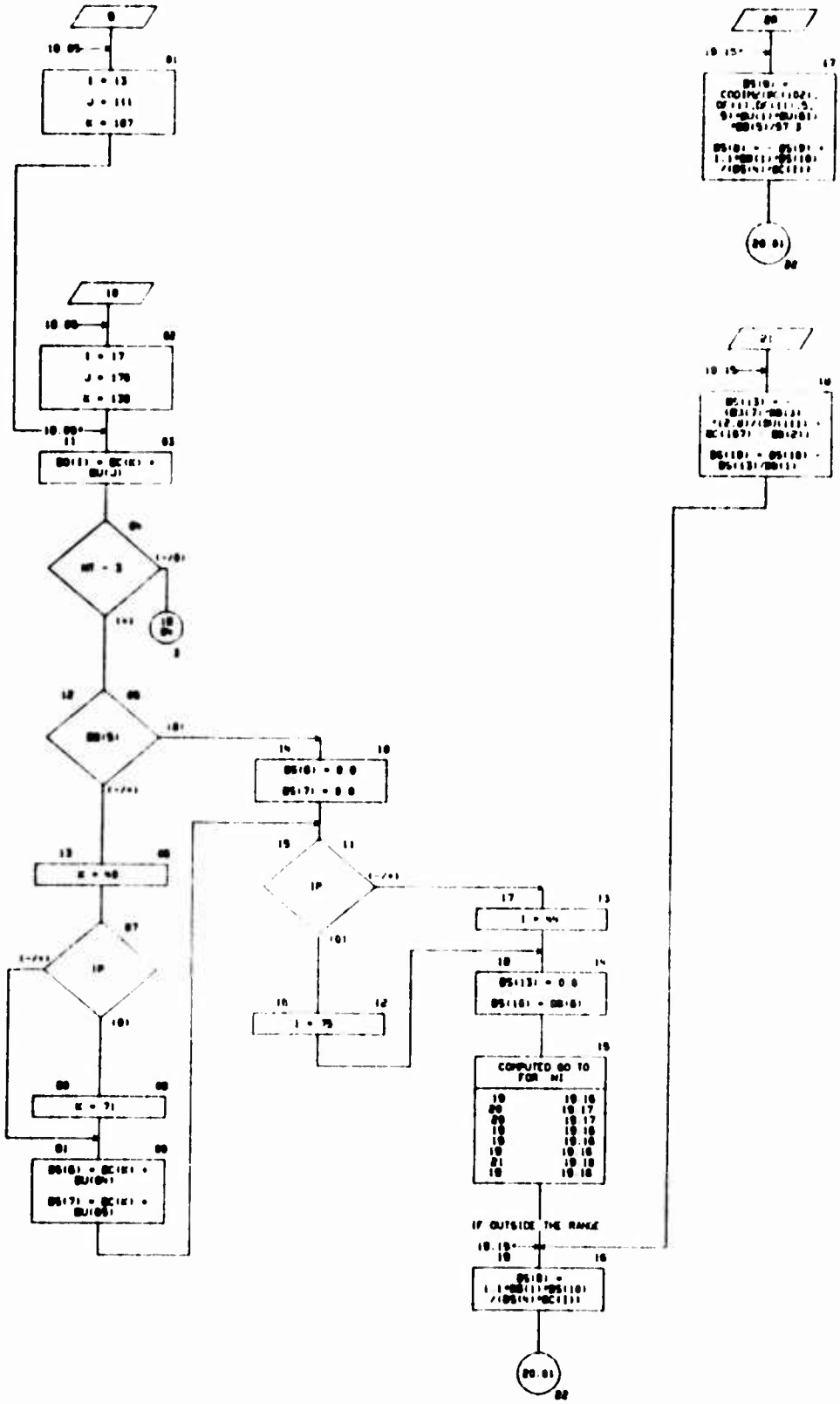

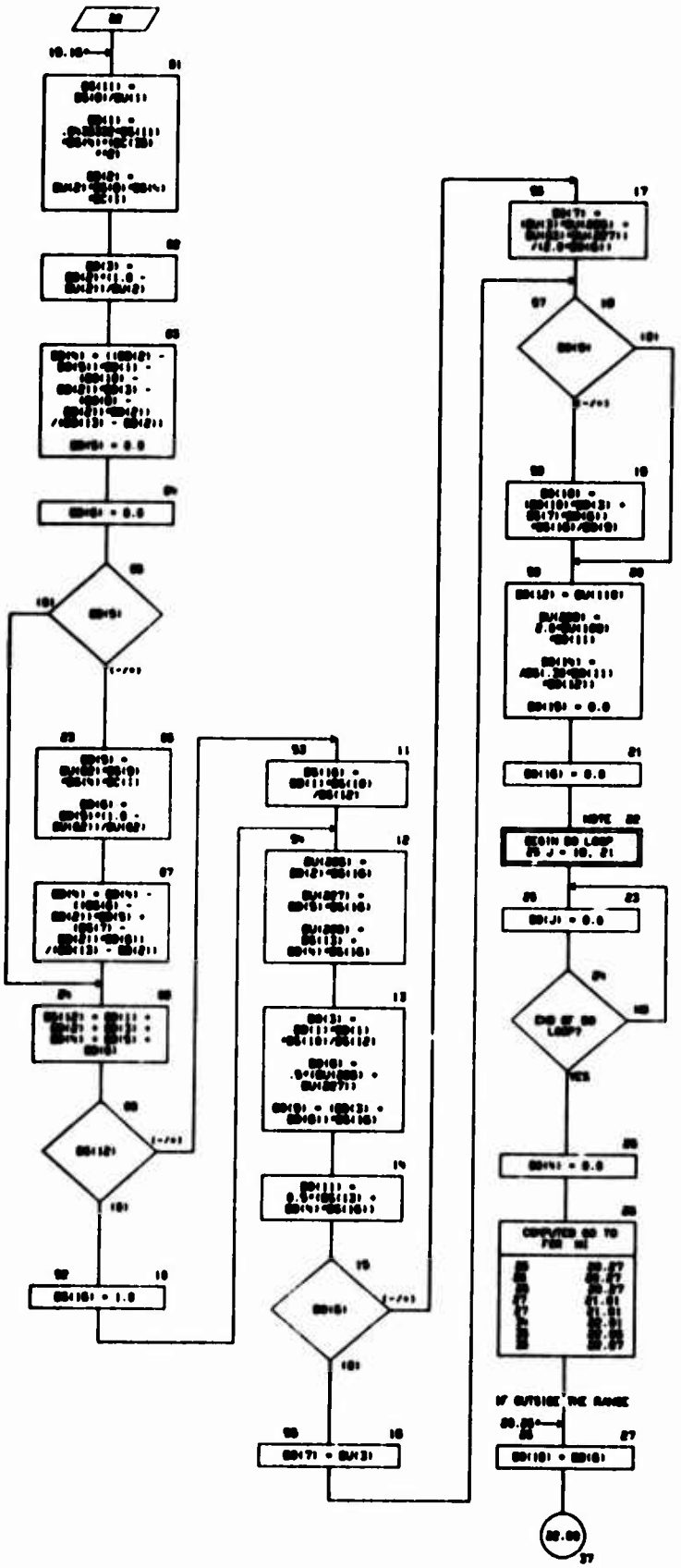

CHART TITLE - SUBROUTINE BNLDS

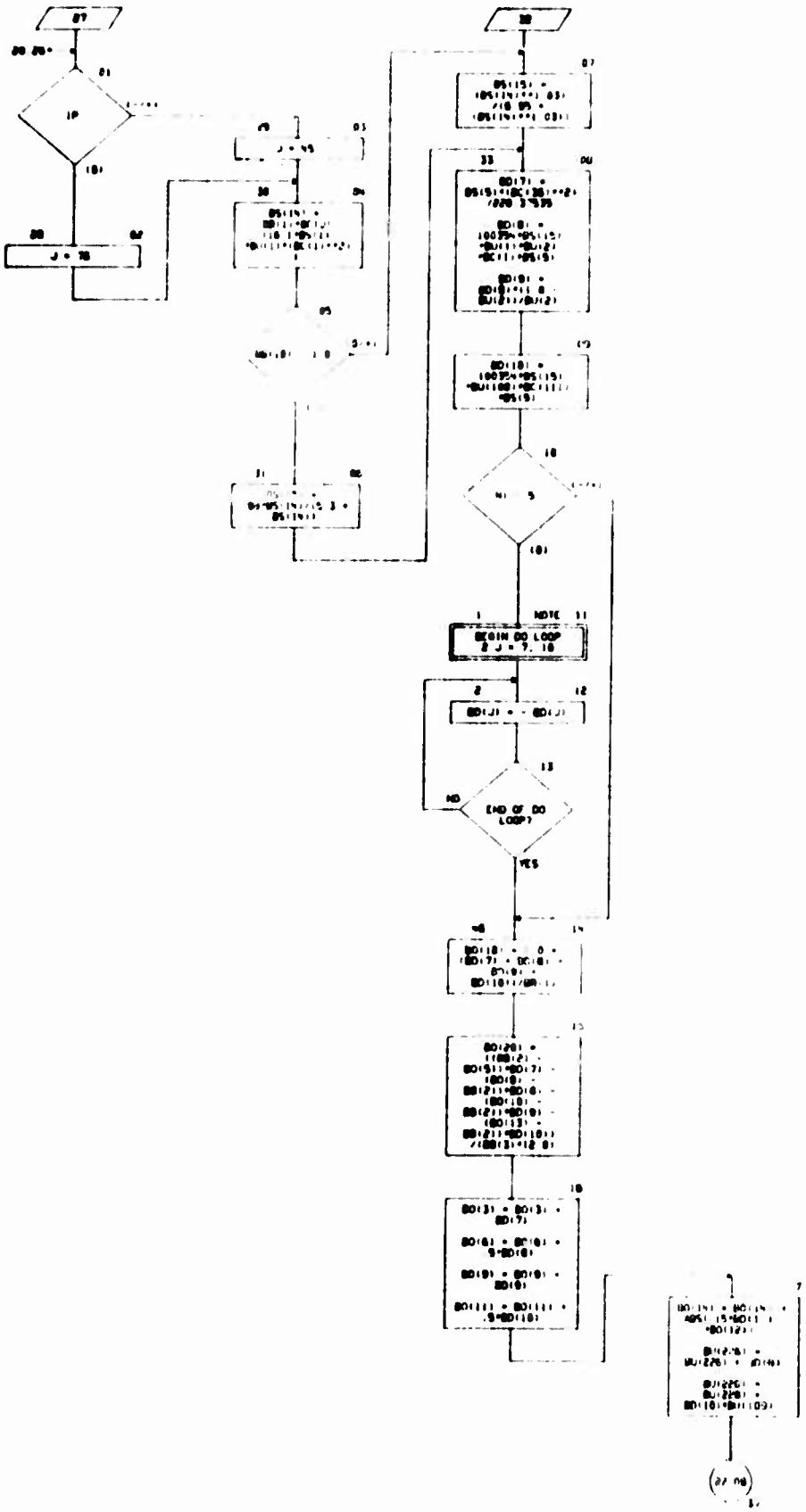

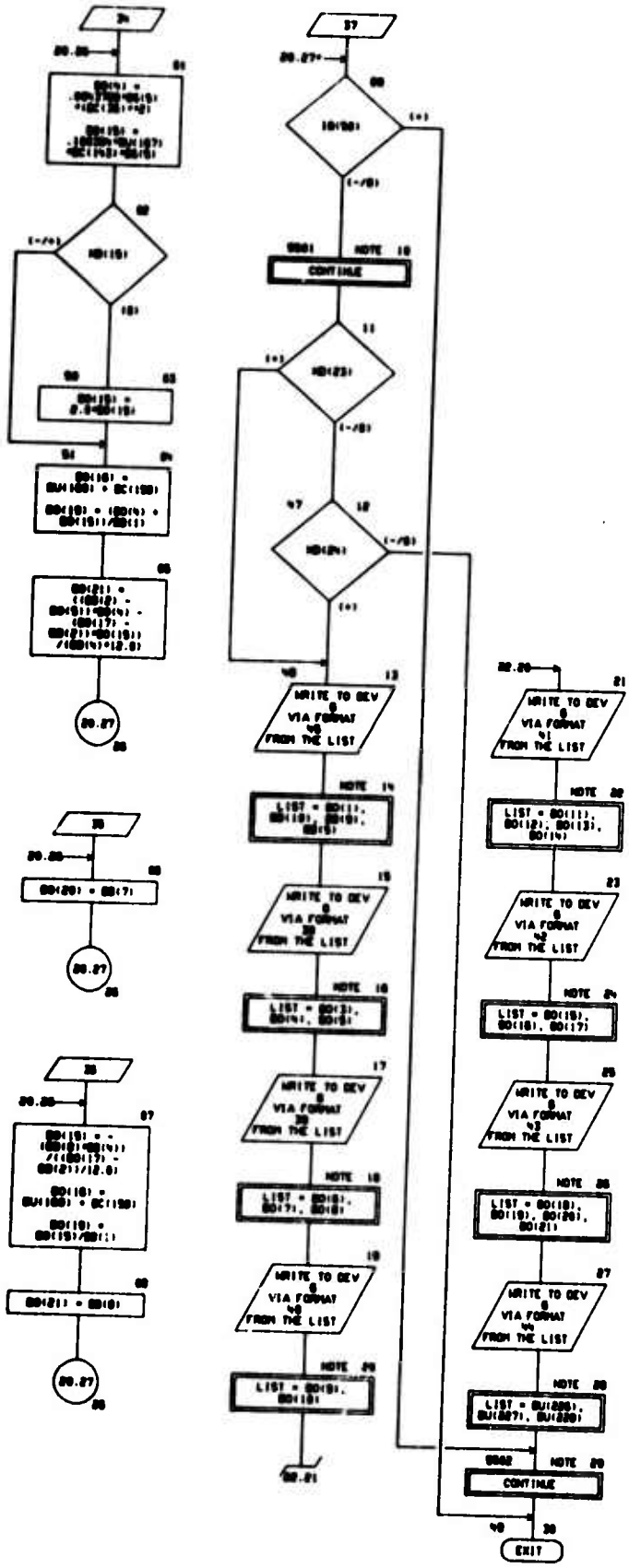
CONTINUE
WRITE TO DEV
VIA FORMAT
FROM THE LIST
EXIT

CHART TITLE - NON-PROCEDURAL STATEMENTS

```
      COMMON TCOM(4400)
      COMMON /IPRINT/IQ(80)
      DIMENSION BB(20),BD(160),BC(195),BS(20),BU(220),BO(620),DF(146),ND
      (200)
      EQUIVALENCE (DF(1),TCOM(1000)),(BD(1),TCOM(2983)),(BC(1),TCOM(2758
      )),(BU(1),TCOM(3153)),(BS(1),TCOM(2973)),(BO(1),TCOM(338)),(BB(1)
      ,TCOM(2983)),(ND(1),TCOM(4201)),(NI,ND(106)),(NT,ND(150)),(I,ND(15
      1)),(J,ND(152)),(K,ND(153)),(IP,ND(137))
   40 FORMAT(1H1,6X,13HCONDITION NO=,F7.0,5X,3HMN=,F6.3,5X,4HALT=,F7.0,
         5X,3HDF=,F6.2,10X,20H** BNLDS - IP(50) **/)
   30 FORMAT(1H0,6X,10HBODY LOADS/7X,4HPZN=,F8.0,4X,4HPYN=,F7.0,4X,
      4HBBN=,F8.2/)
   30 FORMAT(1H0,6X,15HWING PANEL LOAD/7X,5HPZW(B)/2=,F9.0,4X,7HYBW(B)=
      F7.2,4X,7HBBW(B)=,F8.2/)
   40 FORMAT(1H0,6X,20HWING CARRY-OVER LOAD/7X,7HPZB(W)=,F8.0,4X,
      7HBBB(W)=,F8.2/)
   41 FORMAT(1H0,6X,21HHORIZONTAL TAIL LOADS/7X,8HPZH/2=,F6.0,4X,4HYBH=,
      F8.2,4X,4HBBH=,F8.2,4X,5HDMBH=,F9.0/)
   42 FORMAT(1H0,6X,18HVERTICAL TAIL LOAD/7X,4HPYV=,F8.0,4X,4HZBV=,F6.2,
      4X,4HBBV=,F8.2/)
   43 FORMAT(1H0,6X,24HAIRPLANE INERTIA FACTORS/7X,3HNZ=,F6.2,4X,3HNY=,
      F6.2,4X,5HQDOT=,F7.3,4X,5HRDOT=,F7.3/)
   44 FORMAT(1H0,6X,28HCOMPONENT SPANWISE FACTORS/7X,8HPZW(B)A=,F9.0,4X,
      8HPZW(B)F=,F9.0,4X,7HPZW(B)=,F8.0)
```

CHART TITLE - INTRODUCTORY COMMENTS

((((((((((((((((((((((((((((((((((((((((((((((((((((((((((((((((((((((((
FUNCTION CODING
))))))))))))))))))))))))))))))))))))))))))))))))))))))))))))))))))))))))

CHART TITLE - FUNCTION CODIN2(X,XI,YI,N,NX)

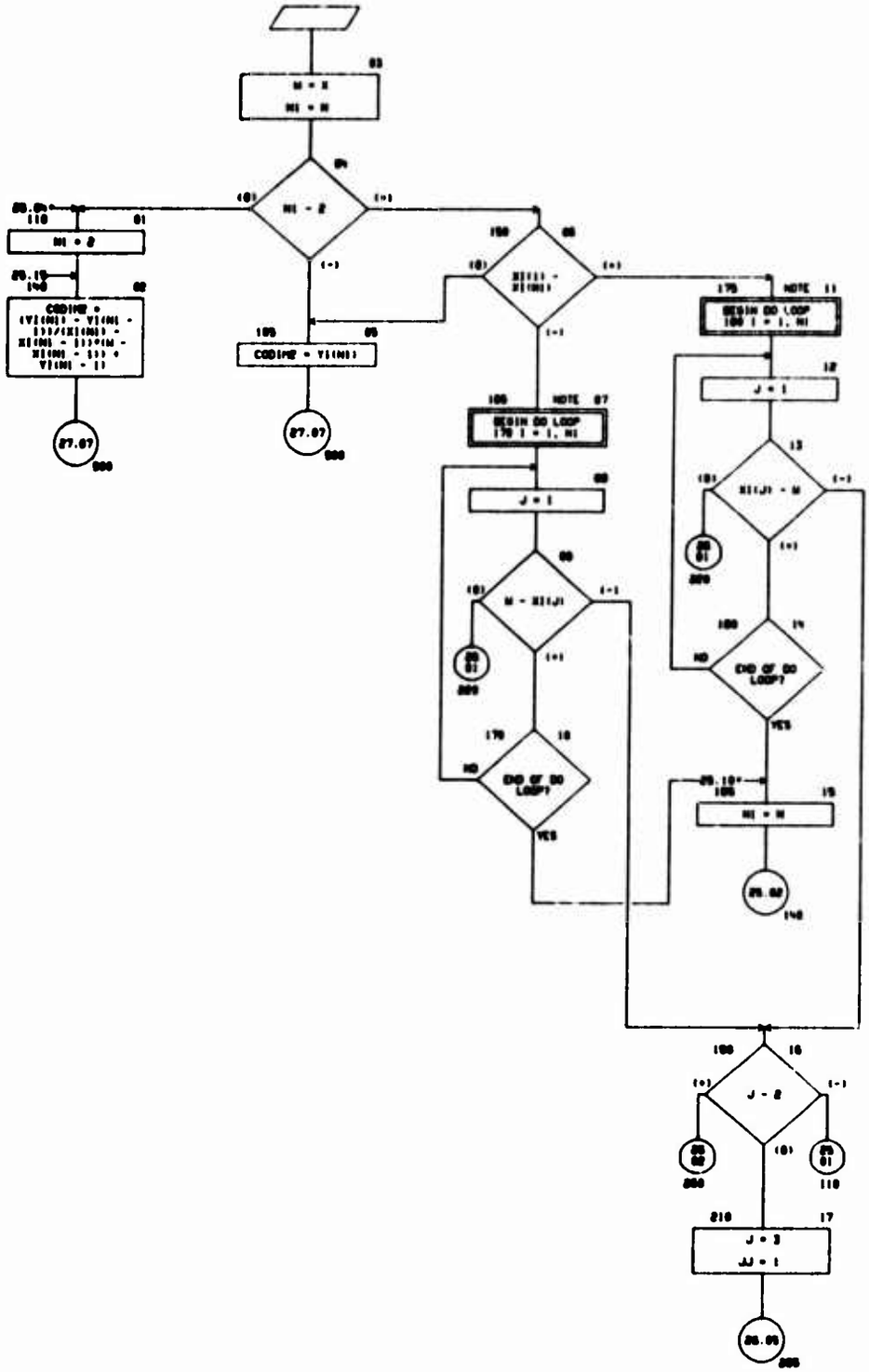

CHART TITLE - FUNCTION CODIN(X,XI,YI,N,NX)

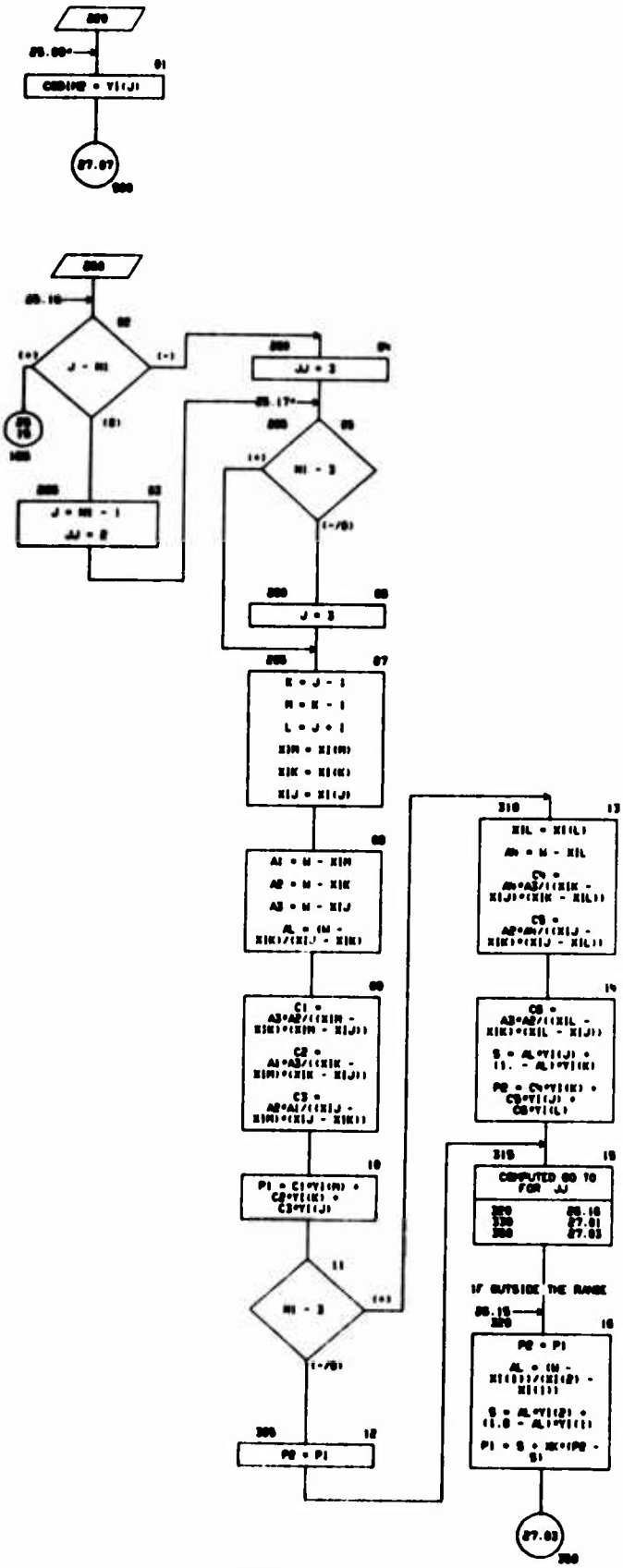

CHART TITLE - FUNCTION CODINP(X,XI,YI,N,NX)

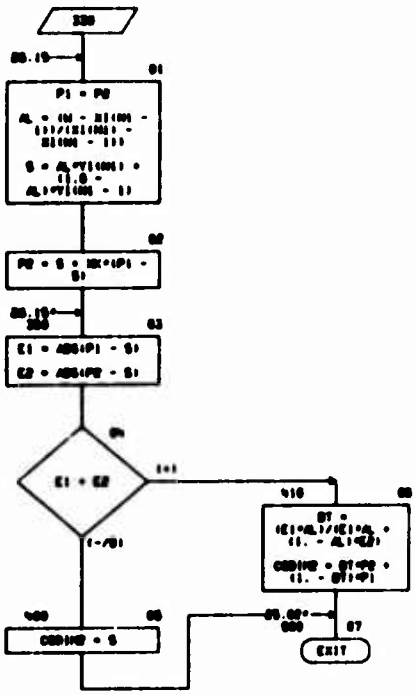

CHART TITLE - NON-PROCEDURAL STATEMENTS

```
COMMON TCOM(4400)
DIMENSION ND(200),XI(1),YI(1)
EQUIVALENCE (ND(1),TCOM(4201)),(NI,ND(143)),(J,ND(144)),(JJ,ND(145
)),(K,ND(146)),(L,ND(147)),(M,ND(148))
```

CHART TITLE - INTRODUCTORY COMMENTS

SUBROUTINE FATHO

CHART TITLE - SUBROUTINE FATMS

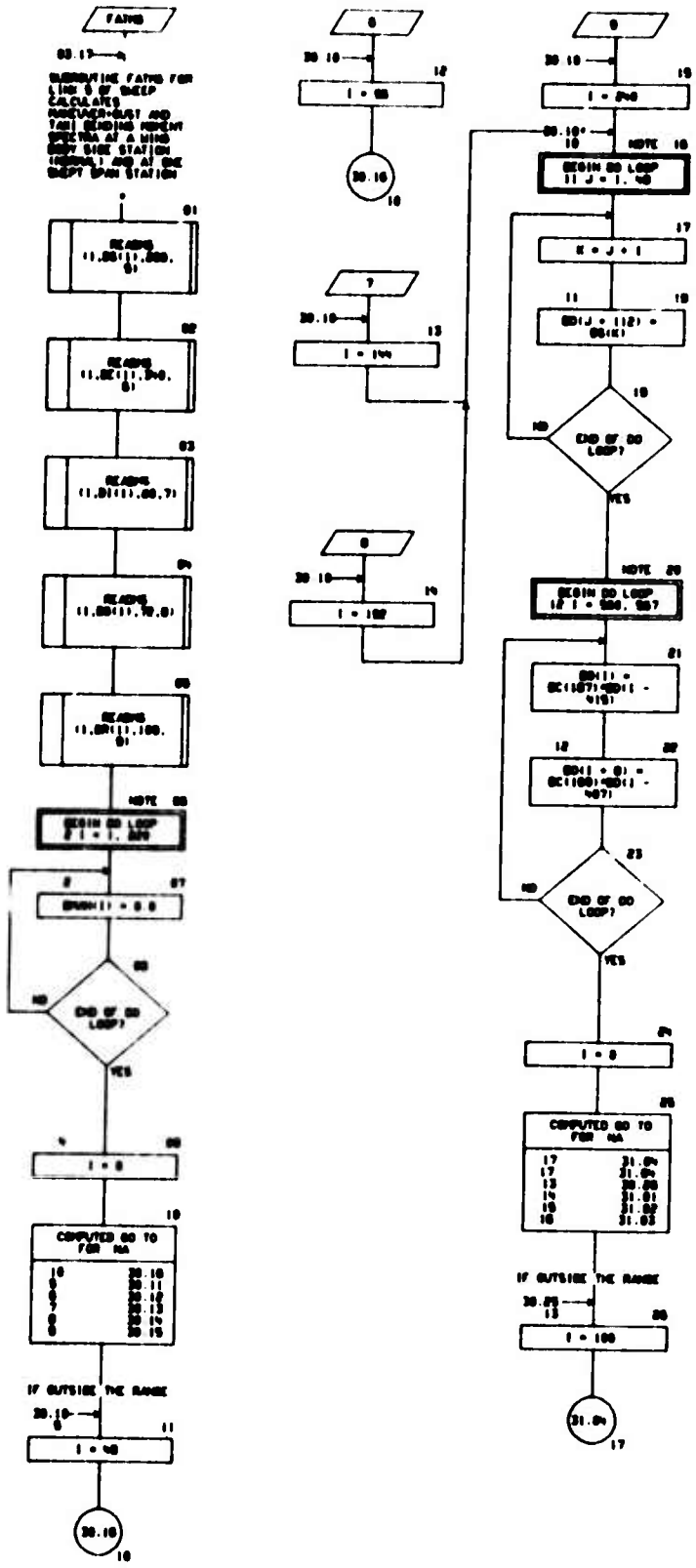

CHART TITLE - SUBROUTINE FATHG

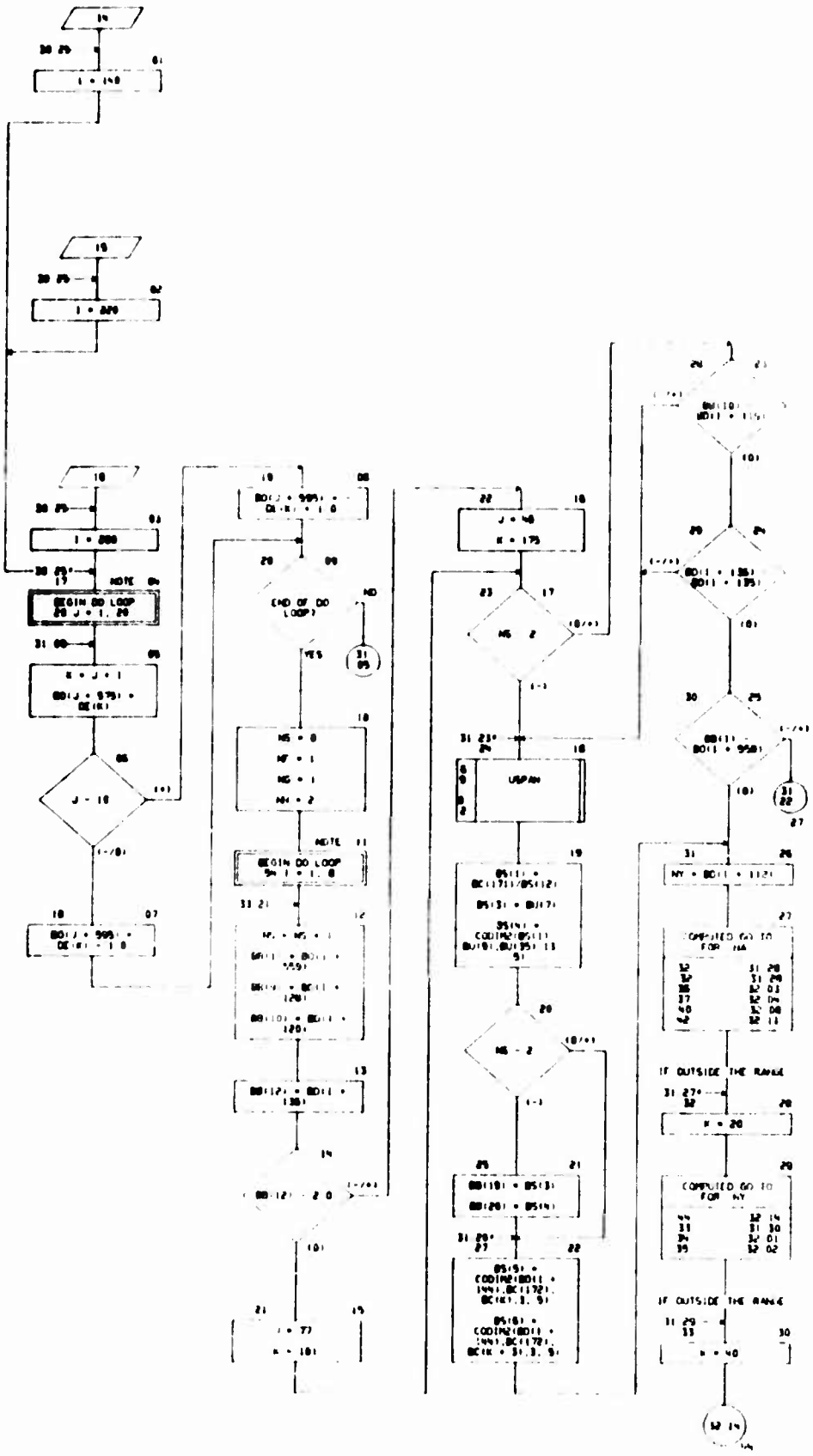

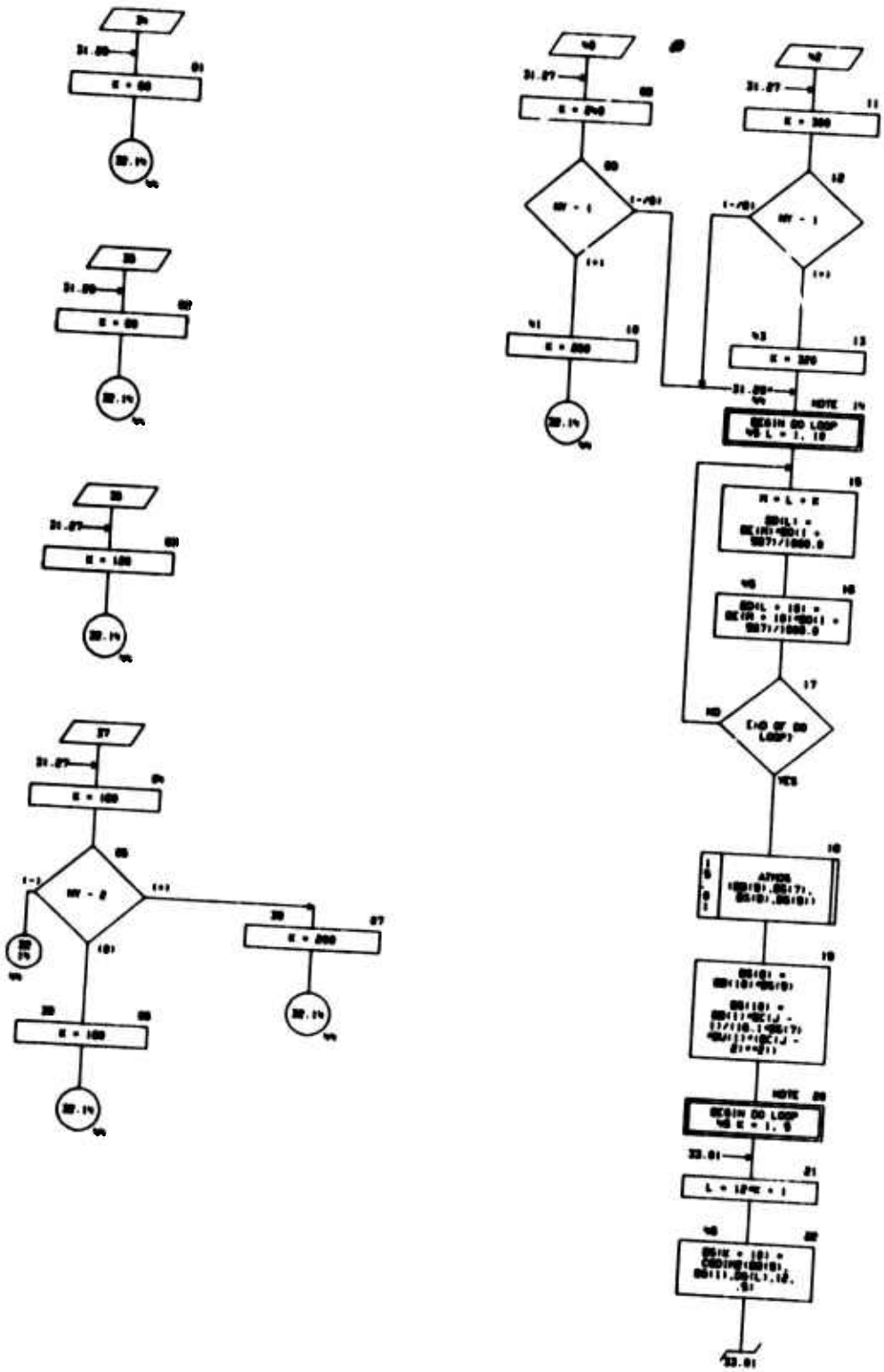

CHART TITLE - SUBROUTINE FATMS
AUTOFLOW CHART SET - SKEEP AIRLOADS OVERLAY
PAGE 32

CHART TITLE - SUBROUTINE FATIG

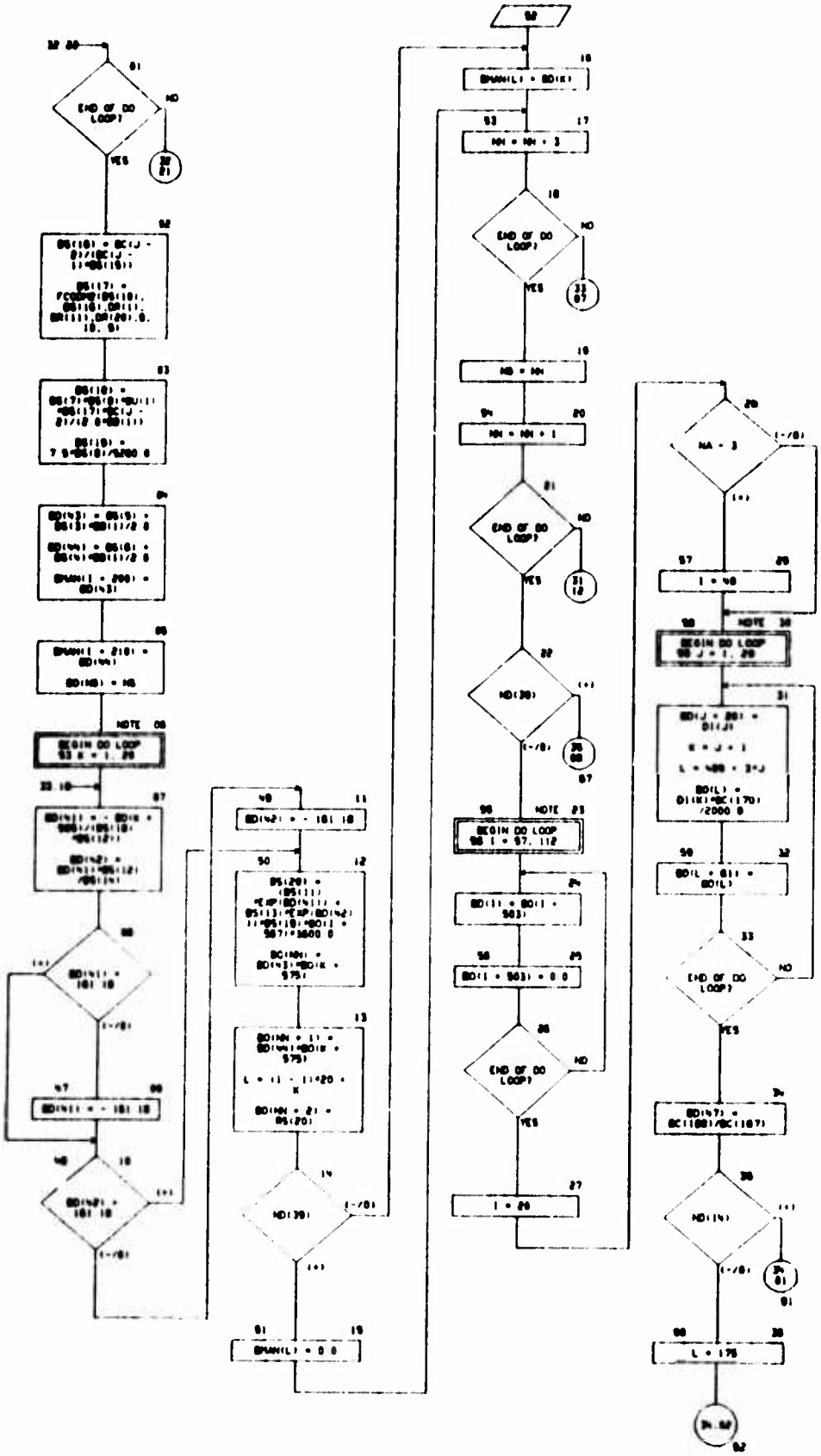

CHART TITLE - SUBROUTINE FAING

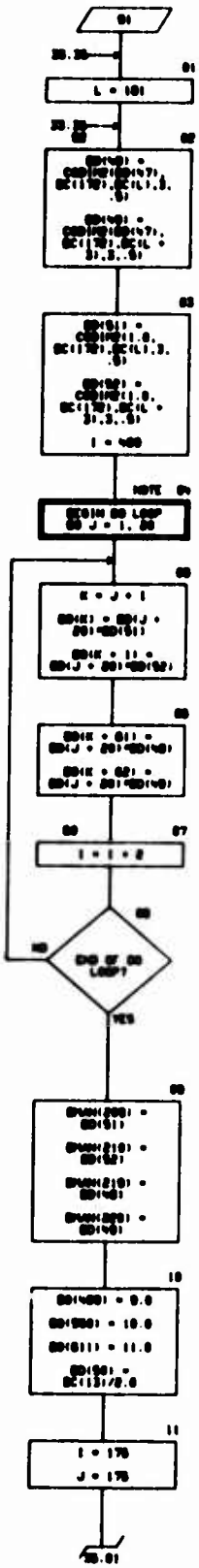

CHART TITLE - SUBROUTINE FATIG

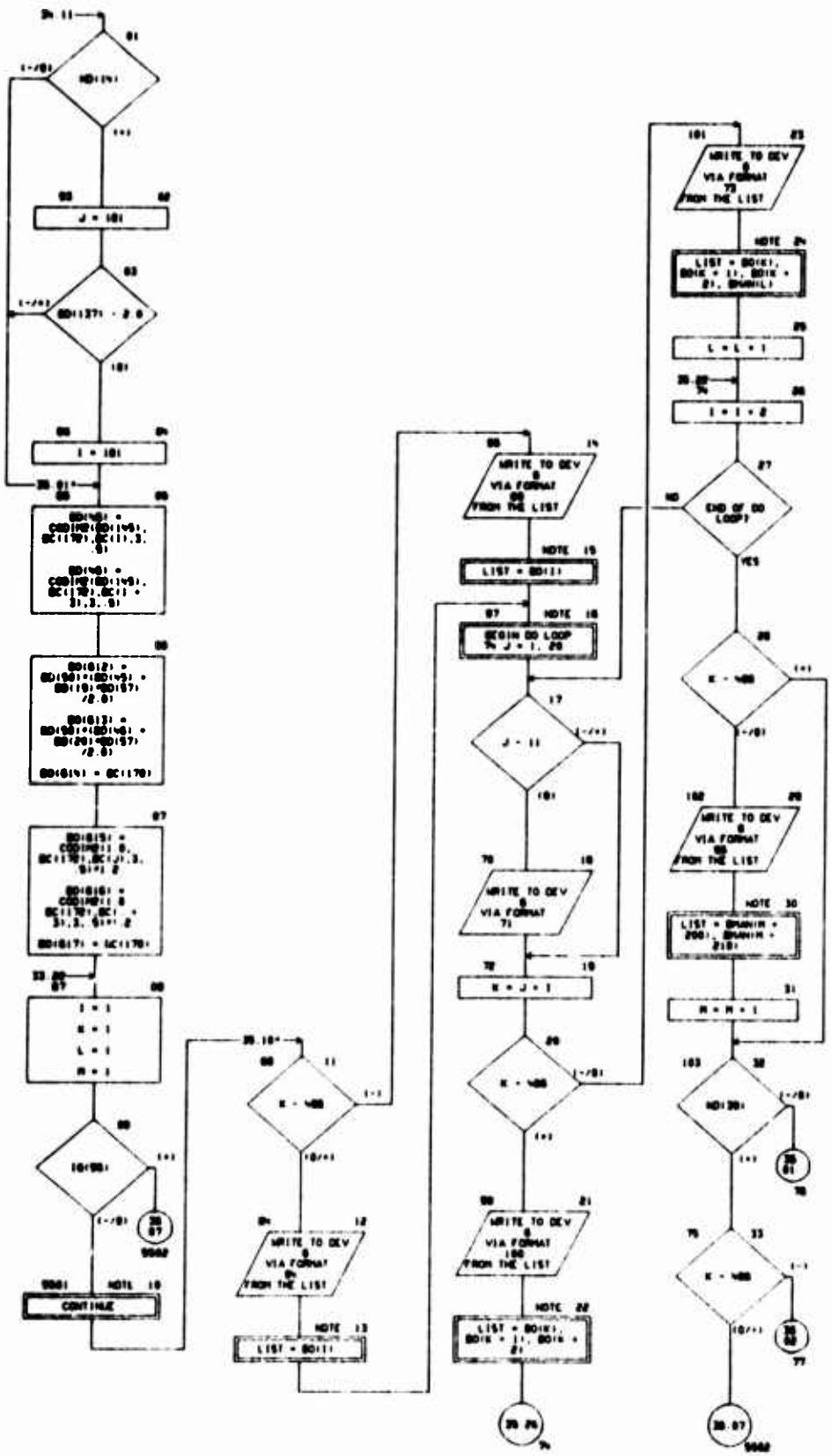

CHART TITLE - SUBROUTINE FATHO

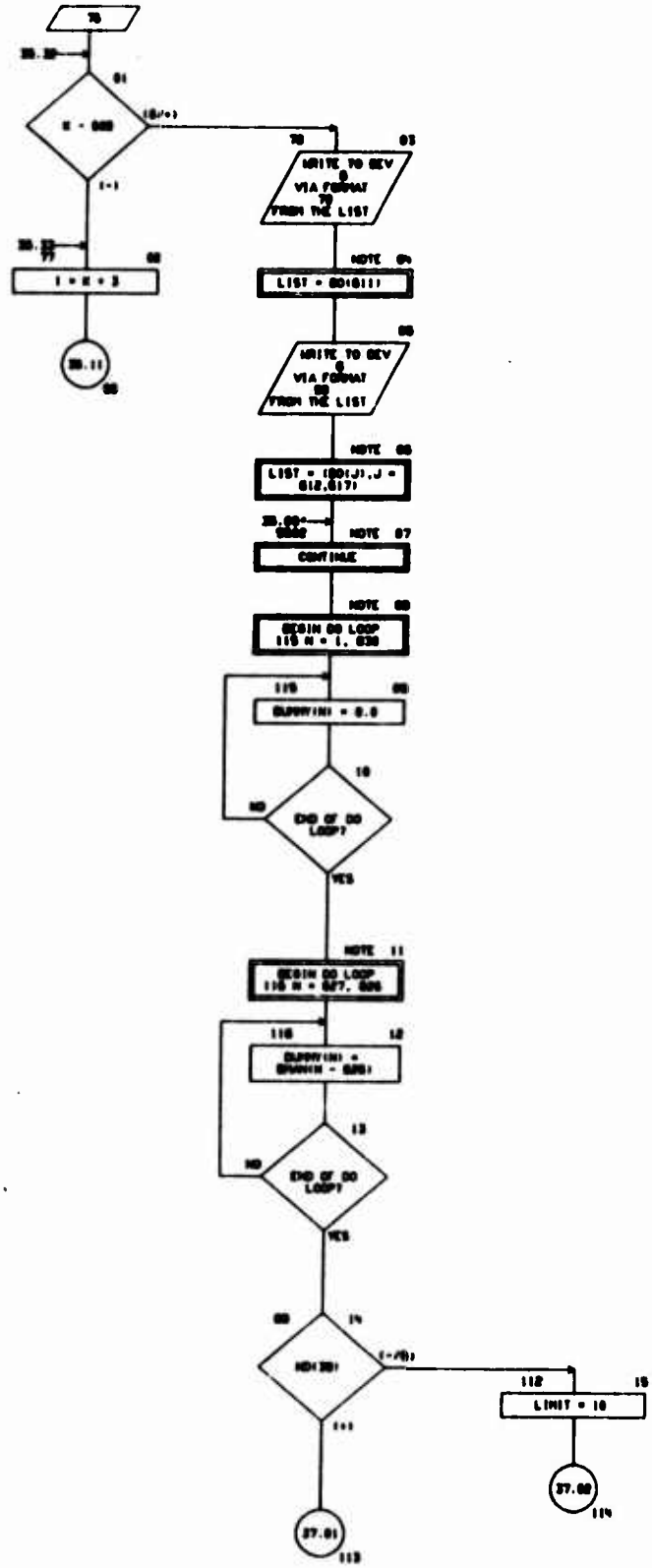

CHART TITLE - SUBROUTINE FATHS

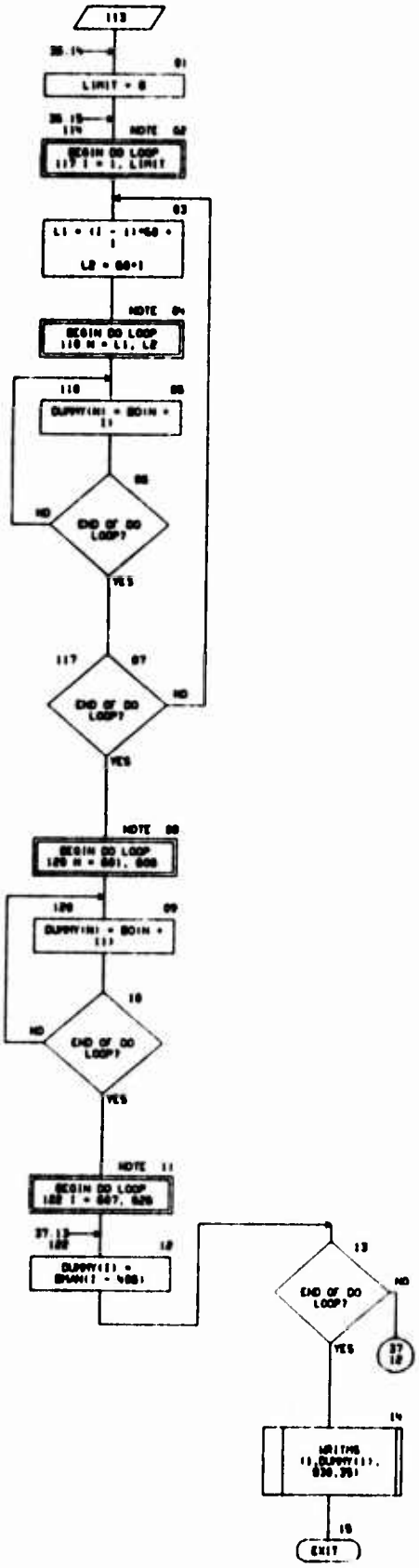

CHART TITLE - NON-PROCEDURAL STATEMENTS

```
      COMMON TCOM(4400)
      COMMON /IPRINT/10(80)
      DIMENSION DS(200),DE(340),DI(60),DG(72),DR(100),ND(200),BC(195),BS
      (20),BD(160),BU(200),BO(620),BB(20),BMAN(220)
      DIMENSION BUMMY(830)
      EQUIVALENCE (DS(1),TCOM(1000)),(DE(1),TCOM(2177)),(DI(1),TCOM(2517
      )),(DG(1),TCOM(2577)),(DR(1),TCOM(2040)),(ND(1),TCOM(420))),(BC(1)
      ,TCOM(2780)),(BD(1),TCOM(2853)),(BS(1),TCOM(2973)),(BO(1),TCOM(290
      3)),(BU(1),TCOM(3153)),(BO(1),TCOM(3301)),(NA,ND(13)),(NF,ND(100))
      ,(NS,ND(160)),(NG,ND(161)),(NN,ND(162)),(NY,ND(163)),(I,ND(104)),(
      J,ND(165)),(K,ND(166)),(L,ND(167)),(M,ND(168))
   94 FORMAT(1H1,88X,20H** FATMG - IP(95) **//
                  4X,18HSPECTRA SEGMENT NO,F4.0//7X,
       12HSOF BEND MOM,3X,12HNOS BEND MOM,5X,18HEXCEEDANCES-TAXI)
   84 FORMAT(1H1,88X,20H** FATMG - IP(95) **//
                  4X,18HSPECTRA SEGMENT NO,F4.0//7X,
       12HSOF BEND MOM,3X,12HNOS BEND MOM,5X,18HEXCEEDANCES-GUST,3X,
       15HEXCEEDANCES-MAN)
   71 FORMAT(1H0)
  100 FORMAT(1H 4X2F15.0,5XE12.5)
   73 FORMAT(1H 4X2F15.0,5XE12.5,5XE12.5)
   95 FORMAT(/11H010 SOF M =,F15.0,3X,10H10 NOS M =,F15.0)
   70 FORMAT(1H1,88X,20H** FATMG - IP(95) **//
                  4X,18HSPECTRA SEGMENT NO,F4.0//5X,24HGROUND-AIR-GRO
      UND CYCLES//7X,27HSOF BEND MOM   NOS BEND MOM,7X,11HOCCURRENCES)
   90 FORMAT(1H ,4X,2F15.0,5X,1E12.5 )
```

CHART TITLE - INTRODUCTORY COMMENTS

```
*****************************************************************
                    FUNCTION FCODE2
*****************************************************************
```

CHART TITLE - FUNCTION FCODM2(X,Y,XI,YI,ZI,NI,N2,XK)

```
THIS DIMENSION CURVE
FIT
SUBPROGRAM....FCODM2
CALLING SEQUENCE
Z =
FCODM2(X,Y,XI,YI,ZI,
NI,N2,XK)
X = ARGUMENT - 1ST
VARIABLE
Y = ARGUMENT - 2ND
VARIABLE
XI = ARRAY OF 1ST
VARIABLE
YI = ARRAY OF 2ND
VARIABLE
ZI = ARRAY OF THE
DEPENDENT VARIABLE
NI = NO. OF POINTS -
YI
N2 = NO. OF POINTS -
XI
XK = END INTERVAL
INTERPOLATION CONTROL
CONSTANT
```

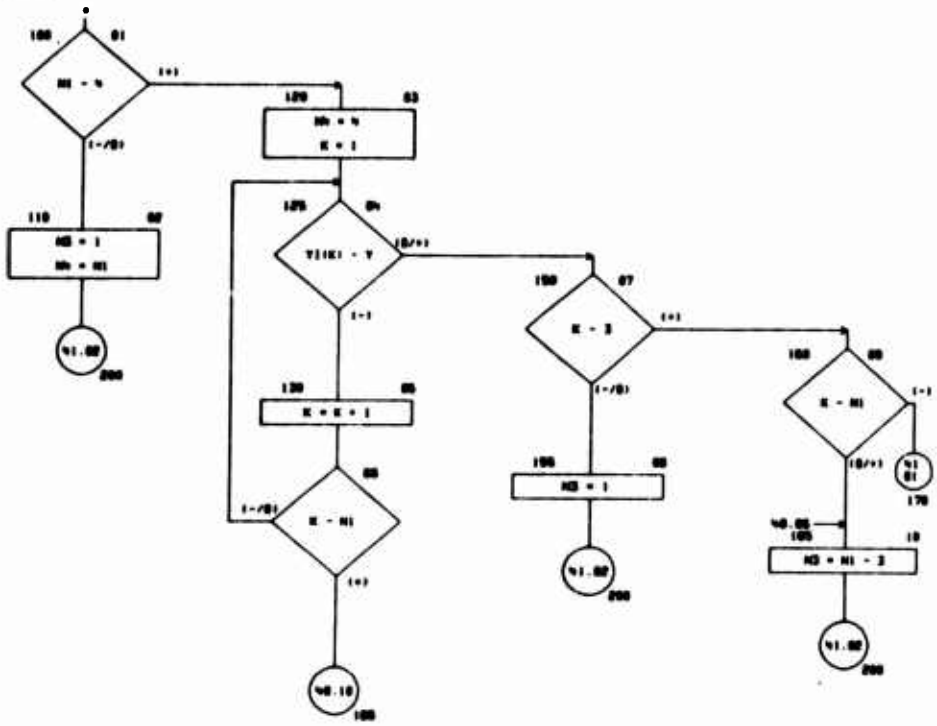

CHART TITLE - FUNCTION FCODM2(X,Y,X1,Y1,Z1,N1,N2,N3)

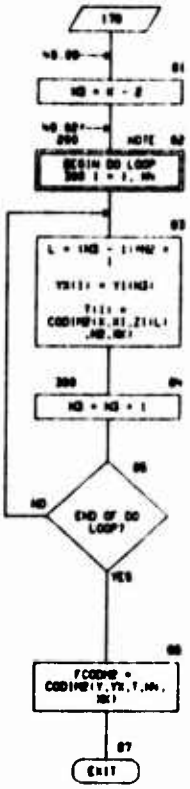

CHART TITLE - NON-PROCEDURAL STATEMENTS

```
COMMON TCOM(4400)
DIMENSION        ND(200),X1(1),Y1(1),Z1(1),T(4),YX(4)
EQUIVALENCE                  (ND(1),TCOM(420)),
            (N3,ND(130)),(NN,ND(130)),(I,ND(140)),(K,ND(141)),(L,
ND(142))
```

CHART TITLE - INTRODUCTORY COMMENTS

SUBROUTINE FUSELT

CHART TITLE - SUBROUTINE FUSET

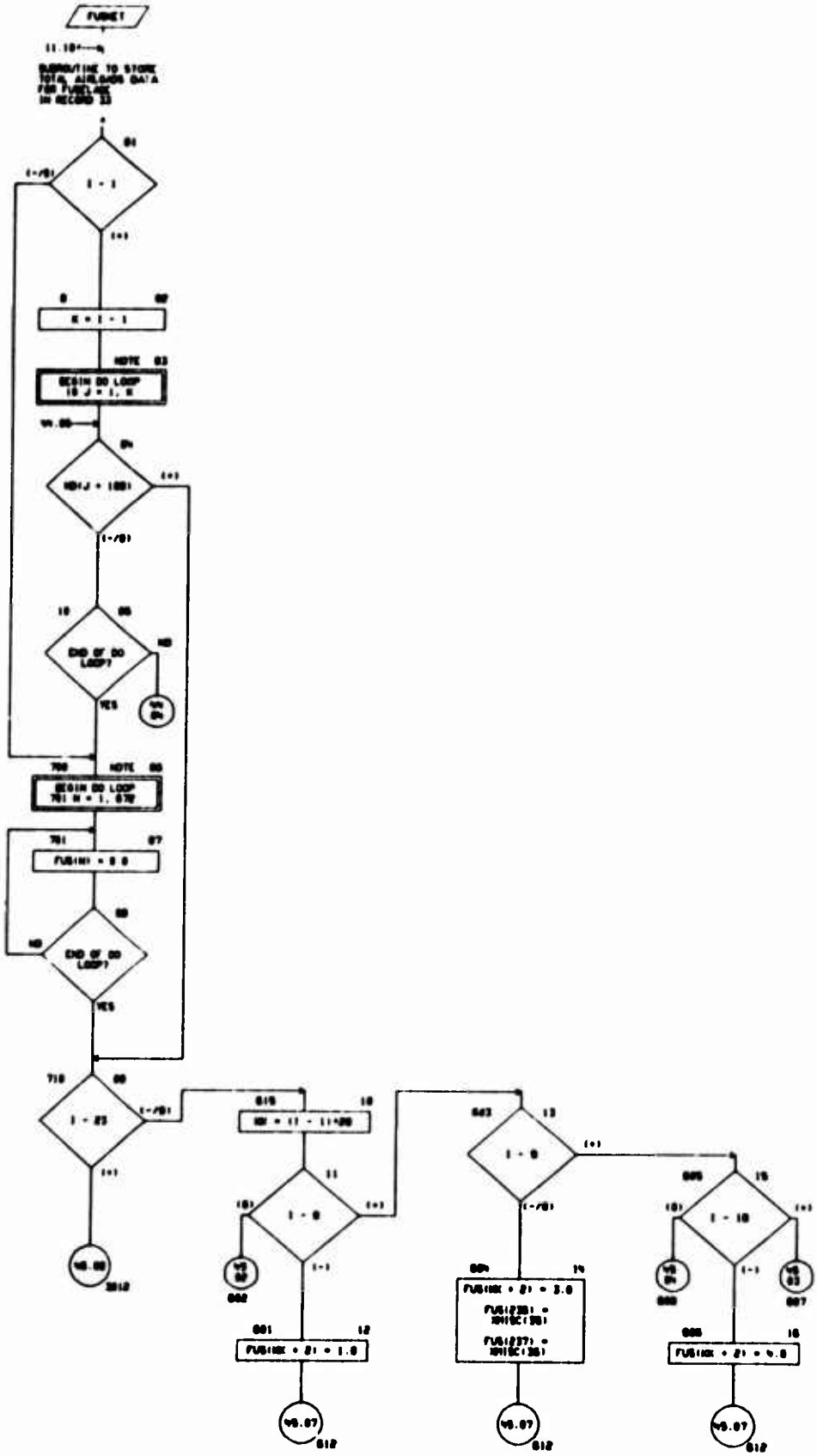

CHART TITLE - SUBROUTINE FUSHET

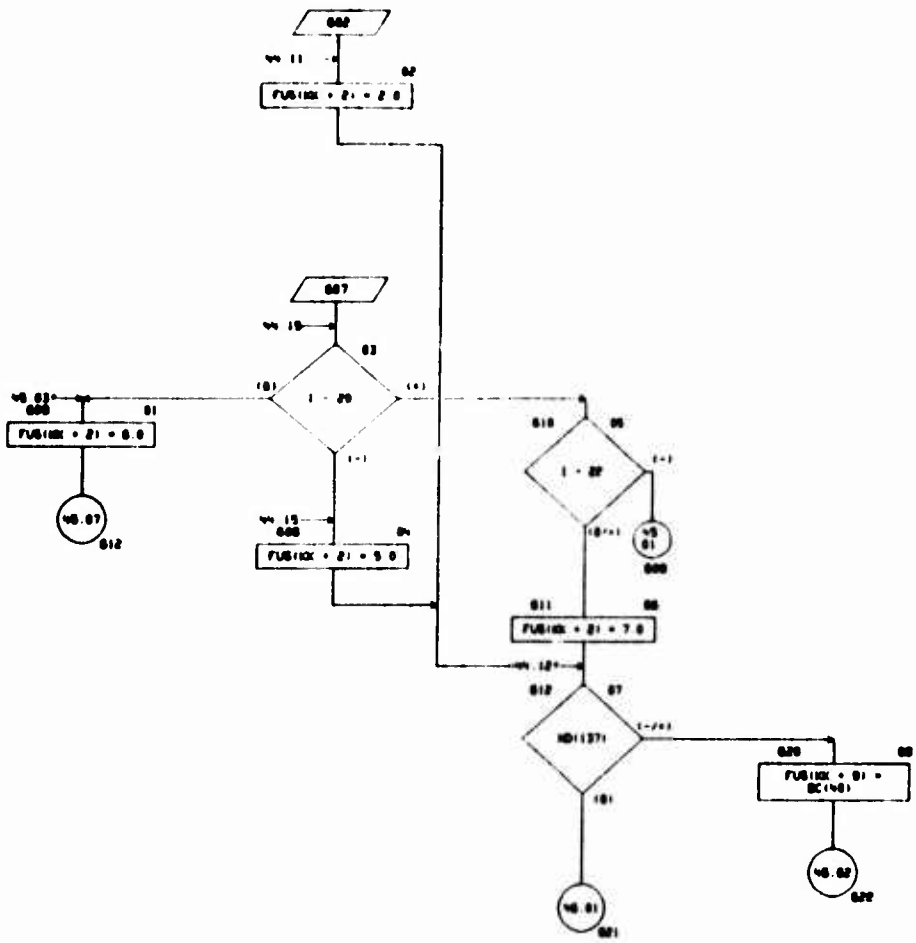

CHART TITLE - SUBROUTINE FUSHET

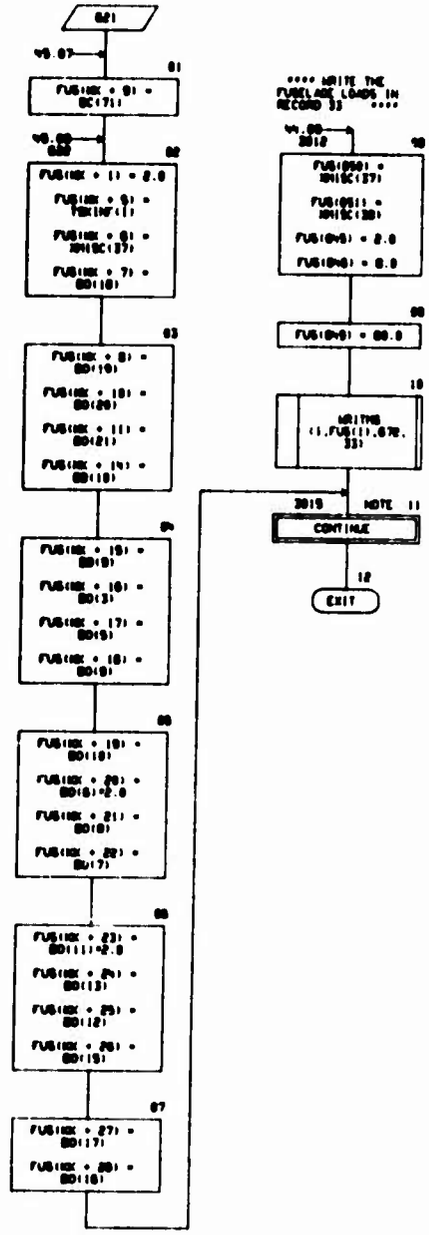

CHART TITLE - NON-PROCEDURAL STATEMENTS

```
COMMON TCOM(4400),WLD(300),IDUM(132),SAVE(132),WKET(132)
  RNZ(132),RC(44),SVF(180),STEMPH(23),STEMPH(23),STEMPV(23),
 DUM(198)
COMMON /MISC/ XMISC(100)
DIMENSION ND(200),BO(620),BC(105)
DIMENSION TSKINF(23)
DIMENSION FUS(672),BB(20)
EQUIVALENCE (ND(1),TCOM(4201)),(BO(1),TCOM(3381)),(BC(1),TCOM(2758
)),(I,ND(101)),(BB(1),TCOM(2953))
EQUIVALENCE (SVF(116),TSKINF(1))
```

CHART TITLE - INTRODUCTORY COMMENTS

```
((((((((((((((((((((((((((((((((((((((((
            SUBROUTINE MAILDS
))))))))))))))))))))))))))))))))))))))))
```

CHART TITLE - SUBROUTINE HAILOS

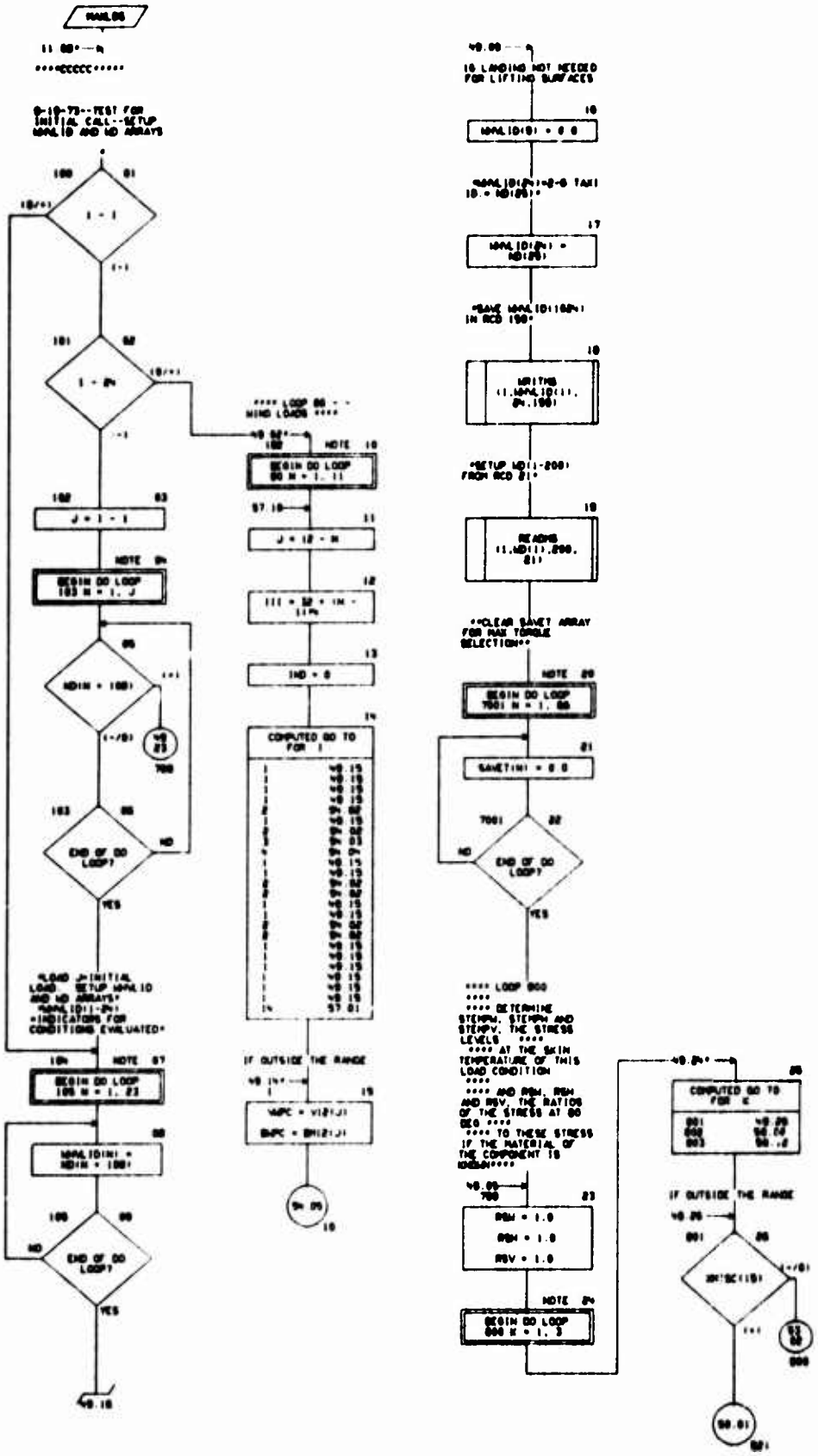

CHART TITLE - SUBROUTINE HAILDS

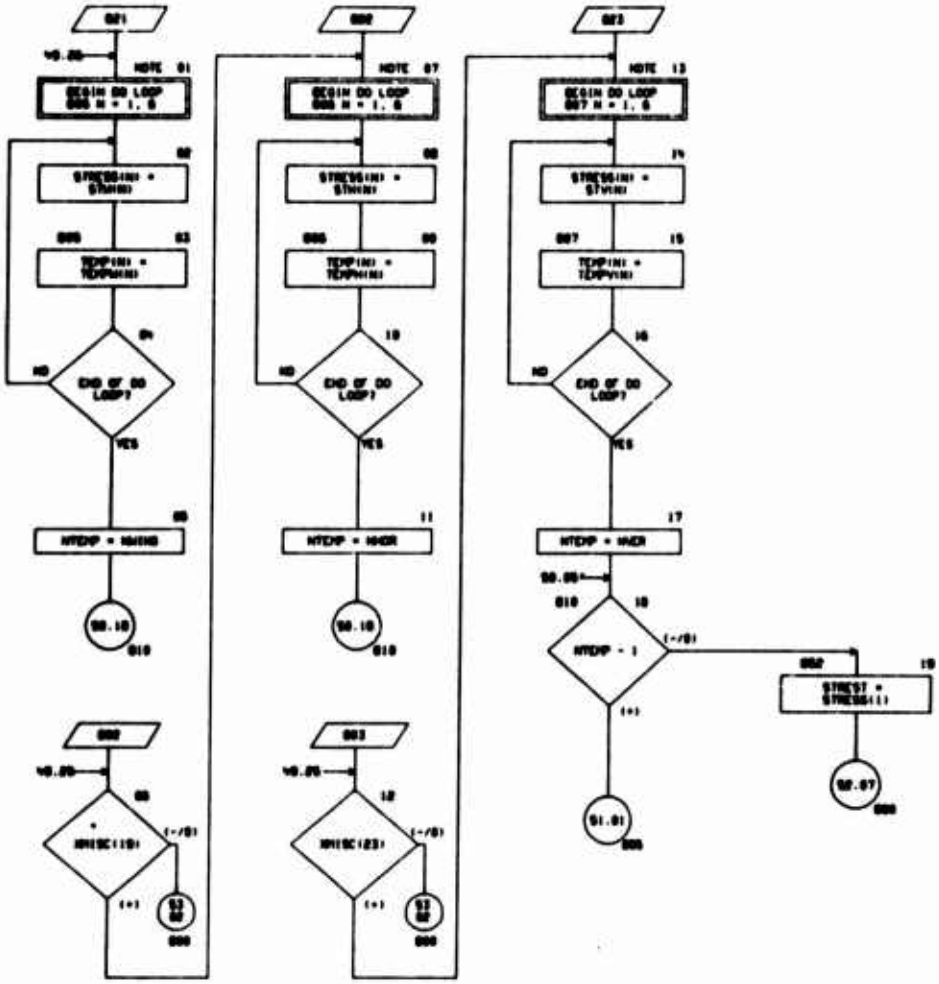

CHART TITLE - SUBROUTINE HAILDS

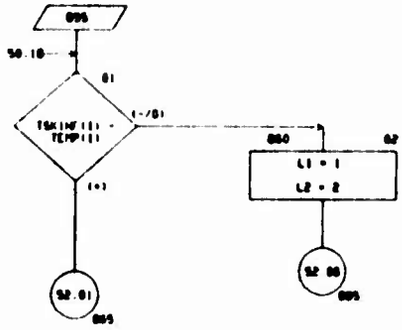

CHART TITLE - SUBROUTINE HAULOS

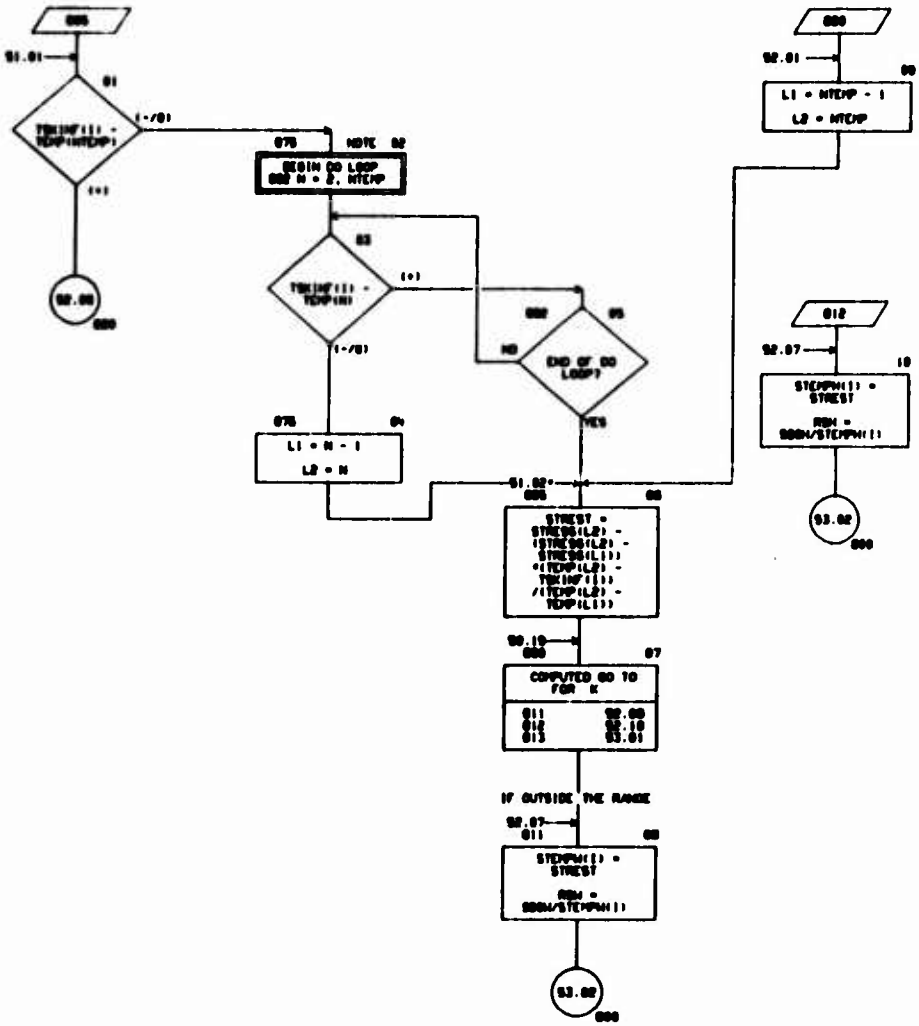

CHART TITLE - SUBROUTINE HAILOS

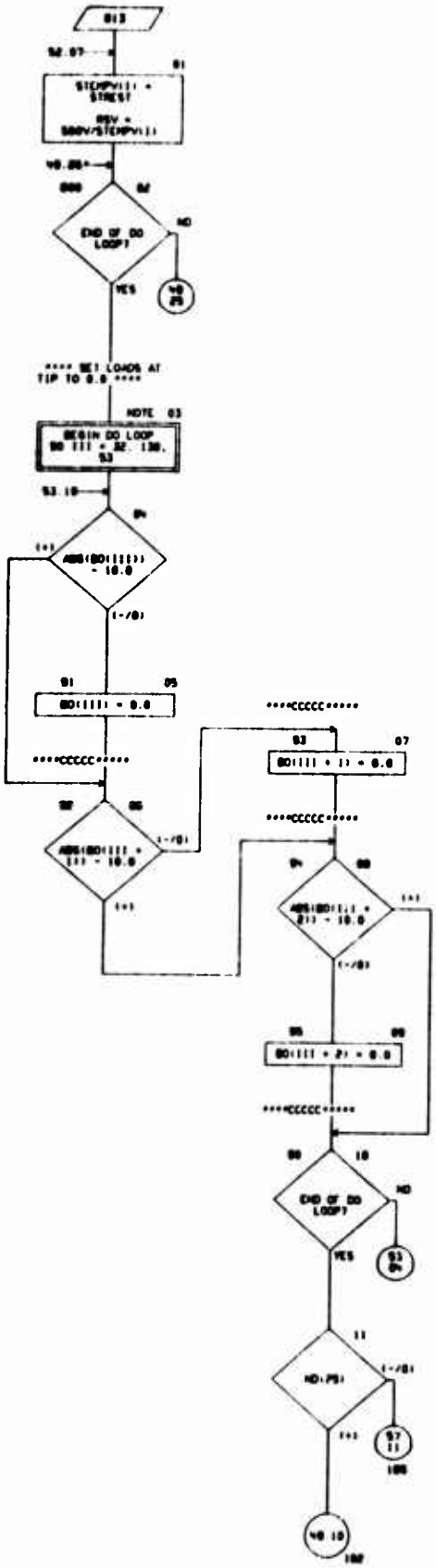

CHART TITLE - SUBROUTINE HAULOS

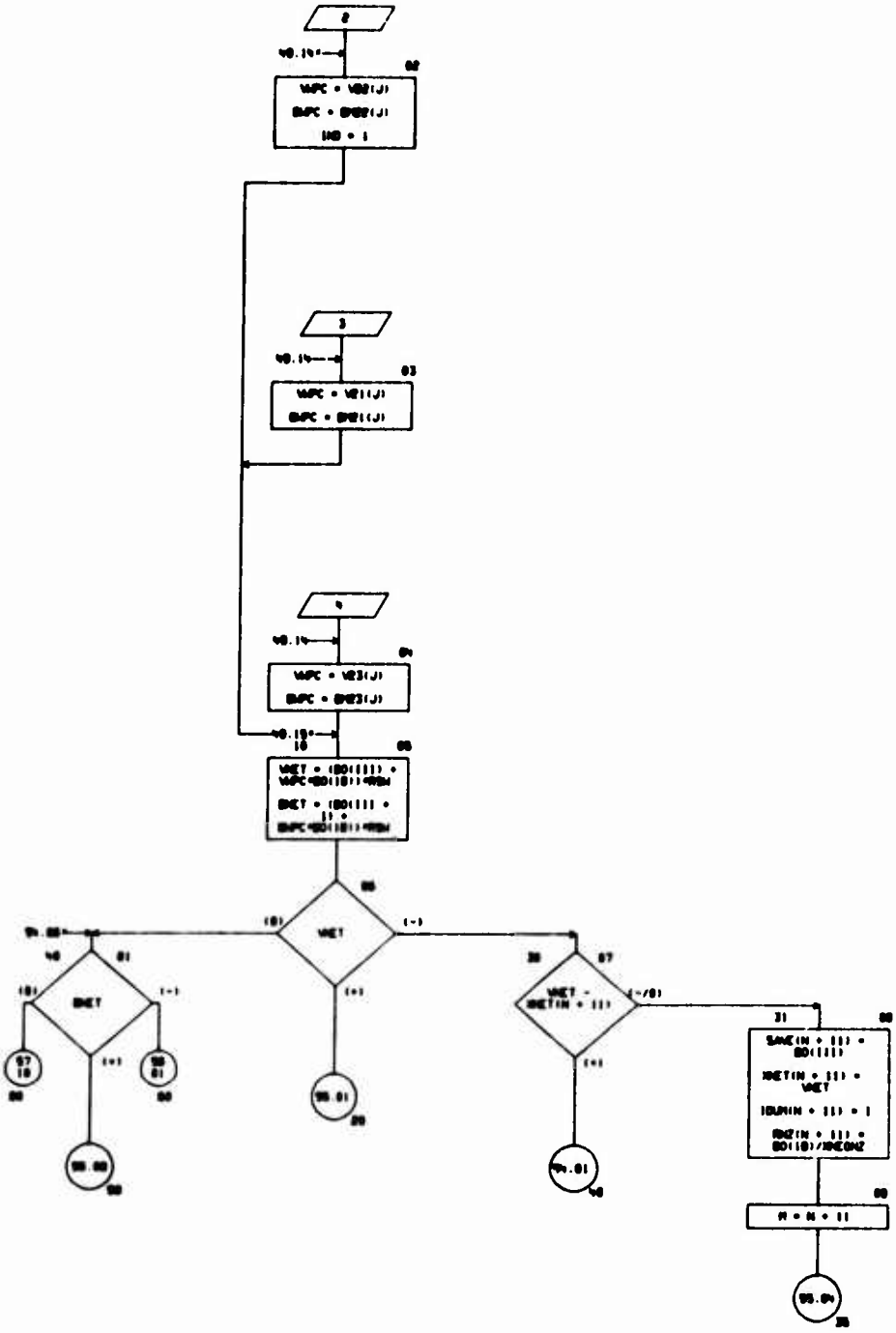

CHART TITLE - SUBROUTINE HAILOS

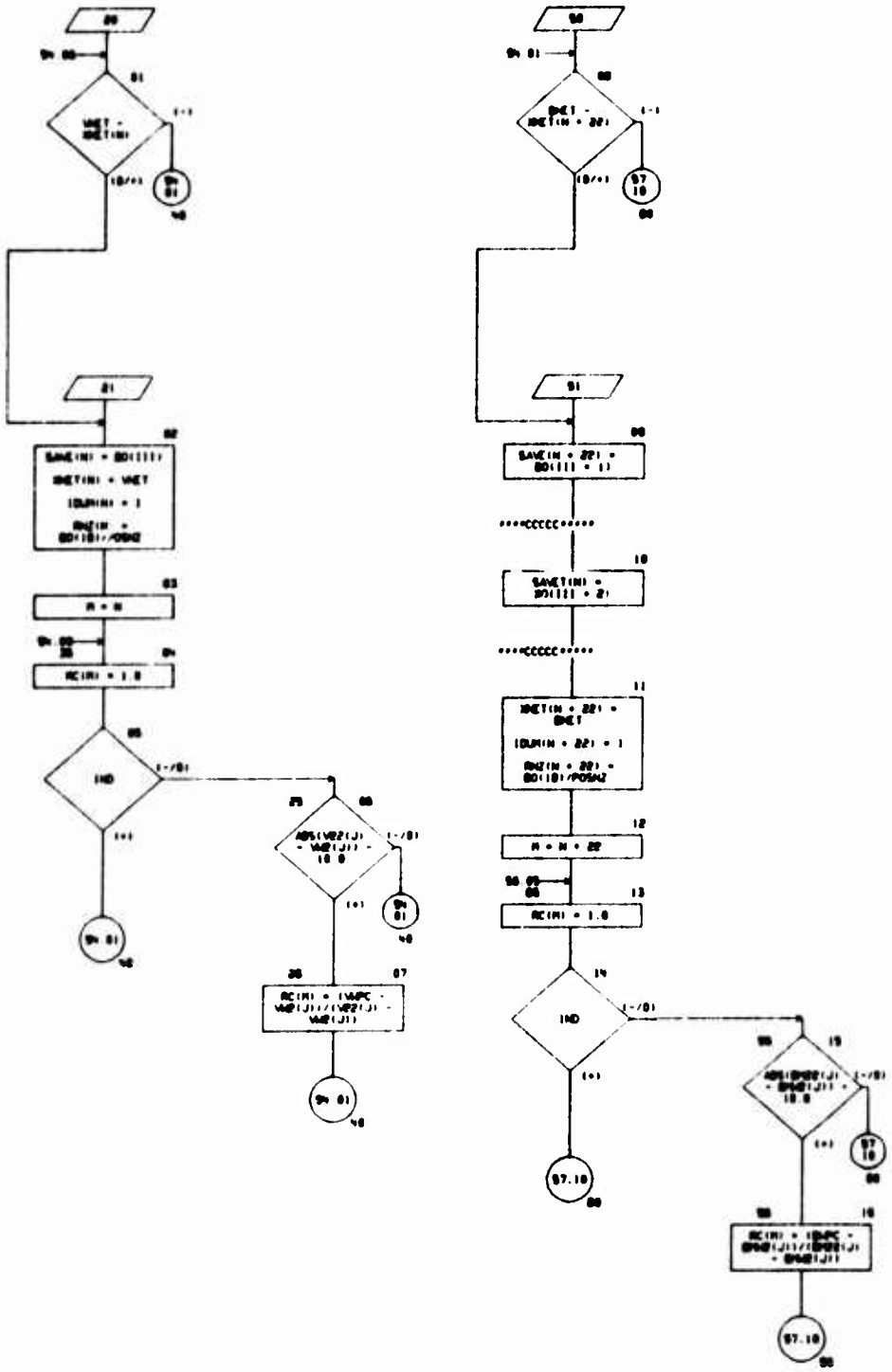

CHART TITLE - SUBROUTINE RAILDS

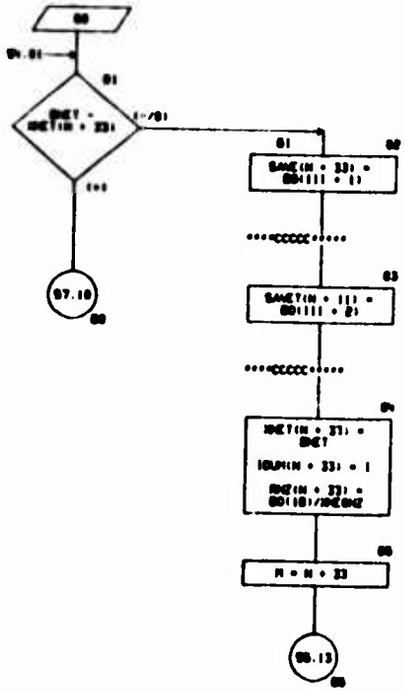

CHART TITLE - SUBROUTINE HAWLOS

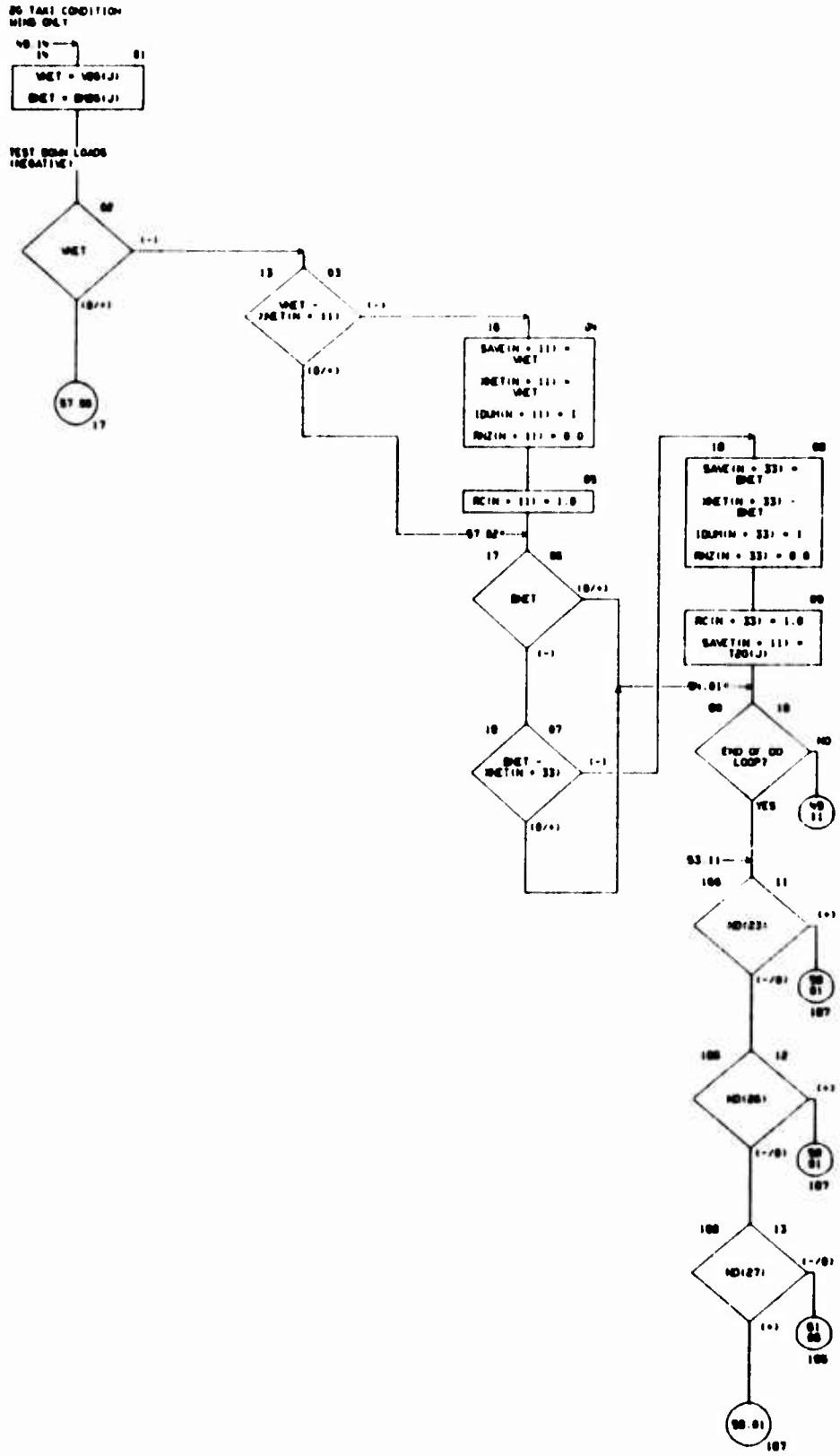

CHART TITLE - SUBROUTINE HAILOS

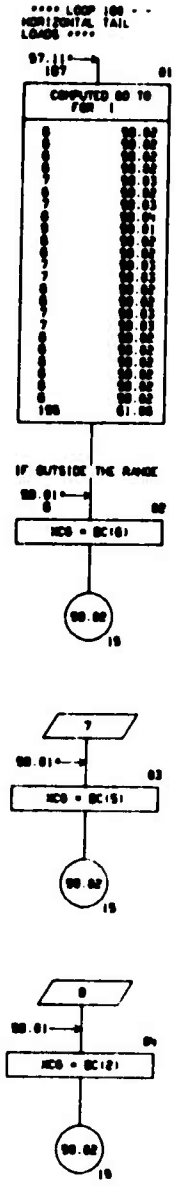

CHART TITLE - SUBROUTINE HAILOS

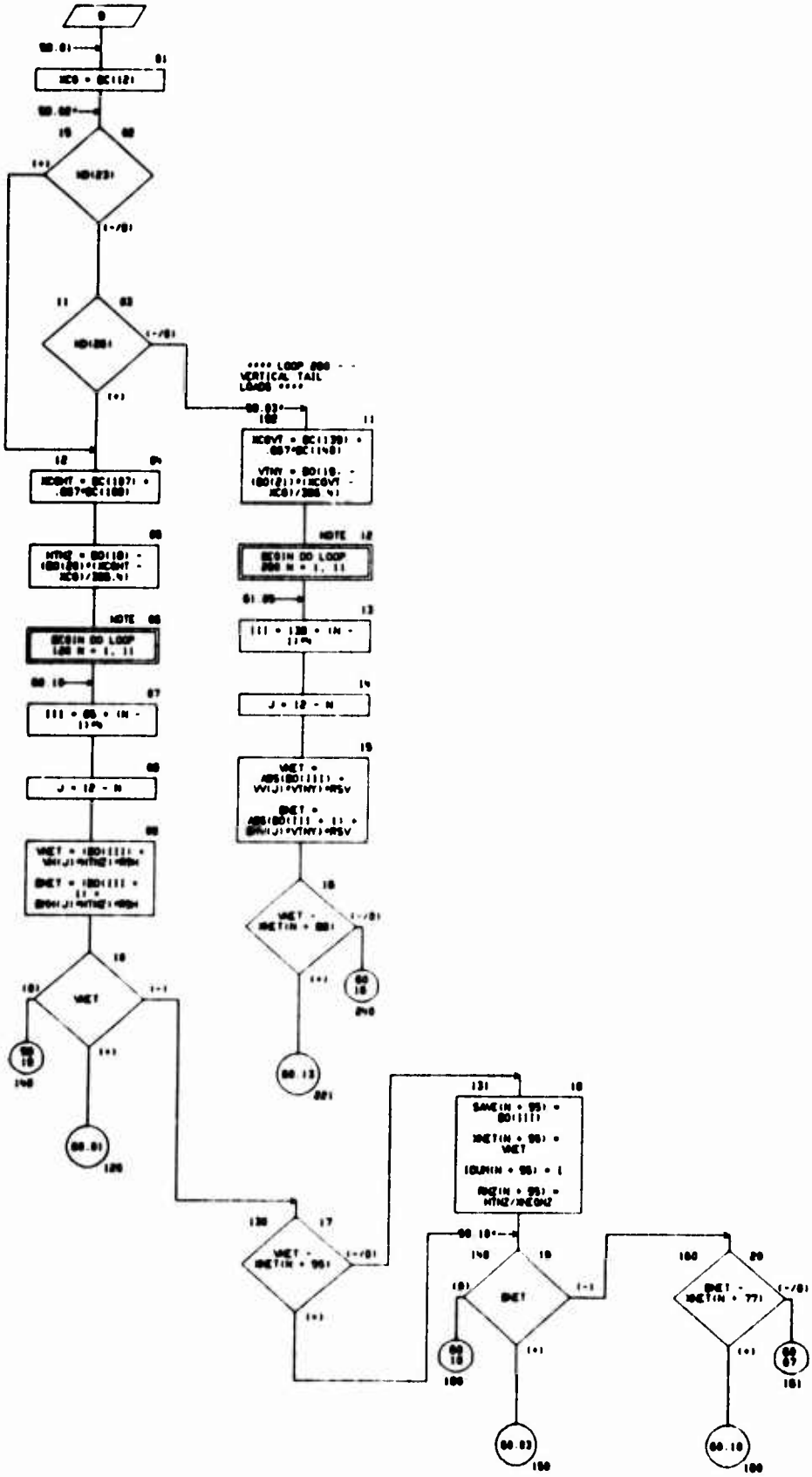

CHART TITLE - SUBROUTINE RAILOS

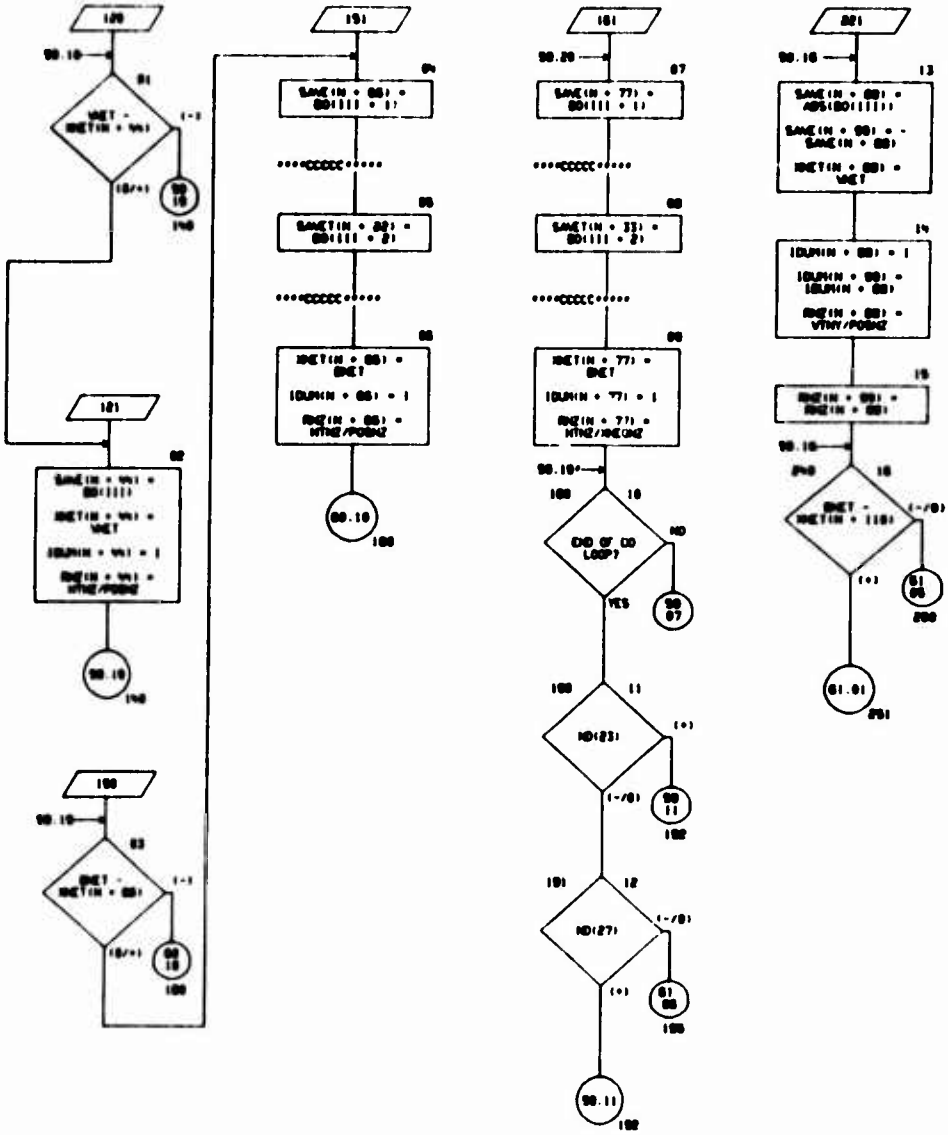

CHART TITLE - SUBROUTINE HAULOS

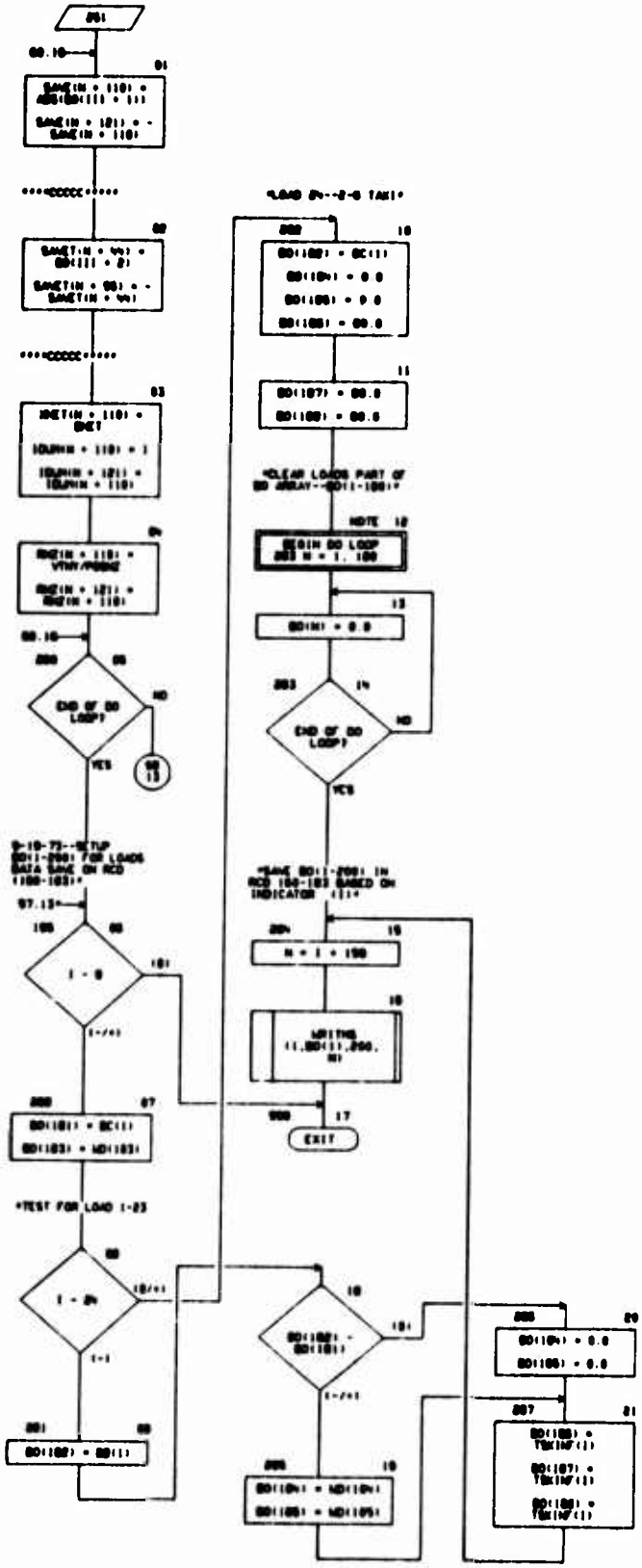

CHART TITLE - NON-PROCEDURAL STATEMENTS

```
COMMON TCOM(4400),WLD(300),IDUM(132),SAVE(132),XNET(132),
  RNZ(132),RC(44),SVF(100),STEMPW(23),STEMPH(23),STEMPV(23)
,DUM(100),SAVET(66)
COMMON /MISC/ XMISC(100)
DIMENSION ND(200),BD(620),TSKINF(23),STRESS(6),TEMP(6),
     STN(6),STH(6),STV(6),TEMPW(6),TEMPH(6),TEMPV(6)
DIMENSION BC(100)
DIMENSION BB(20)
DIMENSION WHVLID(24),WD(200)
DIMENSION VB0(11),BM20(11),T20(11),VH1(11),BMH1(11),
 VH2(11),BMH2(11),V21(11),BM21(11),
 V12(11),BM12(11),VB2(11),BMB2(11),
 V23(11),BM23(11),VH(11),BMH(11),
 VV(11),BMV(11)
EQUIVALENCE  (ND(1),TCOM(4201)),(BD(1),TCOM(3301)),(I,ND(101))
EQUIVALENCE
 (SVF(116),TSKINF(1)),
                                                  (SVF(130),STH   (1)),
 (SVF(145),TEMPW (1)),(SVF(153),STH   (1)),(SVF(150),TEMPH (1)),
 (SVF(167),STV   (1)),(SVF(173),TEMPV (1)),(SVF(151),NWING    ),
 (SVF(165),NWER     ),(SVF(170),NVER     ),(SVF(152),SBBH     ),
 (SVF(166),SBBH     ),(SVF(180),SBBV     )
EQUIVALENCE (BDBH,WLD(1)) , (POSNZ,WLD(2)) , (XNEGNZ,WLD(3)) ,
 ( VB0(1),WLD(  4)) , (BM20(1),WLD( 15)) , ( T20(1),WLD( 26)) ,
 ( VH1(1),WLD( 37)) , (BMH1(1),WLD( 48)) ,
 ( VH2(1),WLD( 70)) , (BMH2(1),WLD( 81)) ,
 ( V21(1),WLD(103)) , (BM21(1),WLD(114)) ,
 ( V12(1),WLD(136)) , (BM12(1),WLD(147)) ,
 ( VB2(1),WLD(169)) , (BMB2(1),WLD(180)) ,
 ( V23(1),WLD(202)) , (BM23(1),WLD(213)) ,
 (  VH(1),WLD(235)) , ( BMH(1),WLD(246)) ,
 (  VV(1),WLD(268)) , ( BMV(1),WLD(279))
EQUIVALENCE (BC(1),TCOM(2750))
EQUIVALENCE (BB(1),TCOM(2953))
```

CHART TITLE - INTRODUCTORY COMMENTS

```
**********************************************************************
                         SUBROUTINE SPABM
**********************************************************************
```

CHART TITLE - SUBROUTINE SPASH

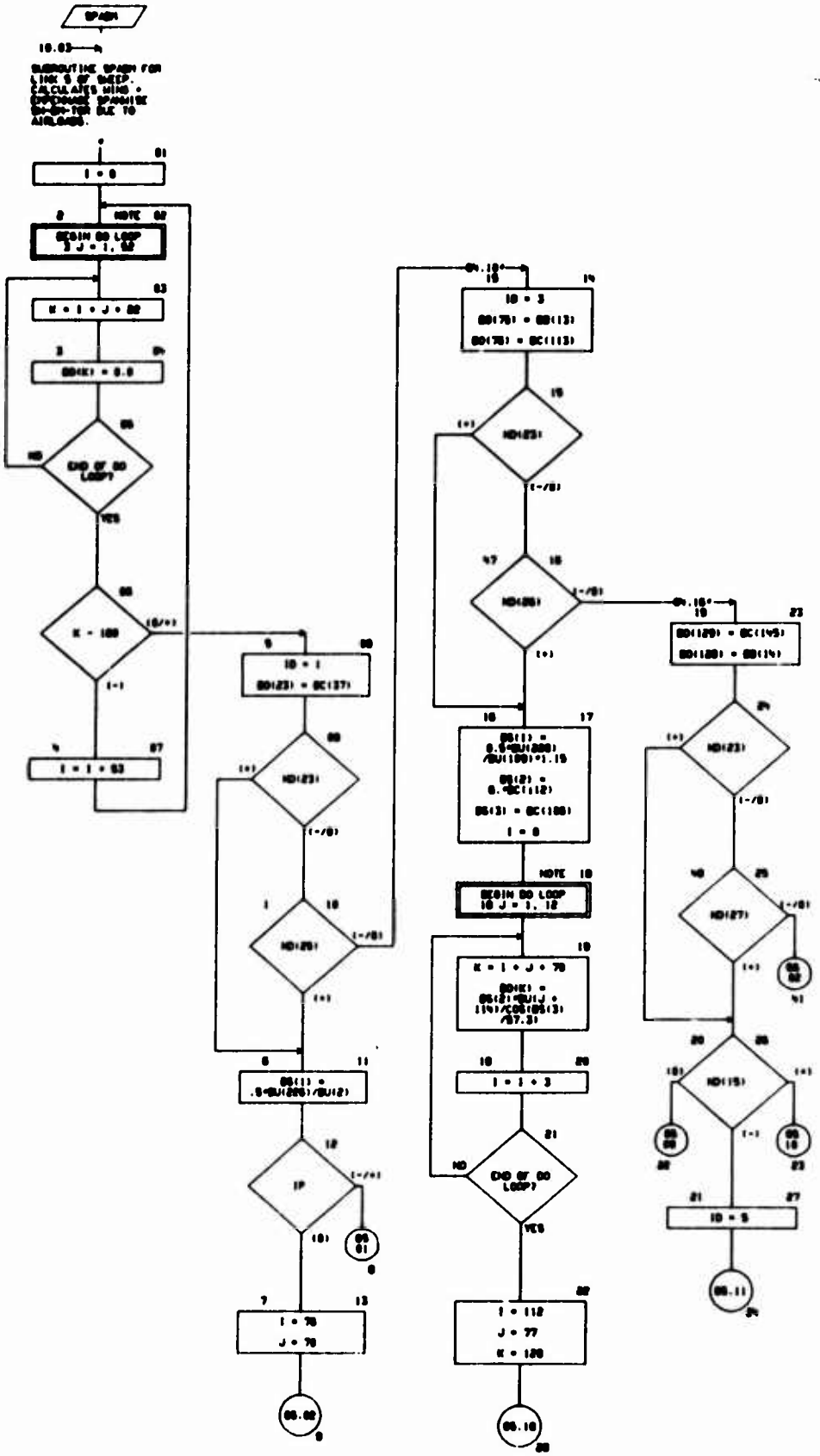

CHART TITLE - SUBROUTINE SPASH

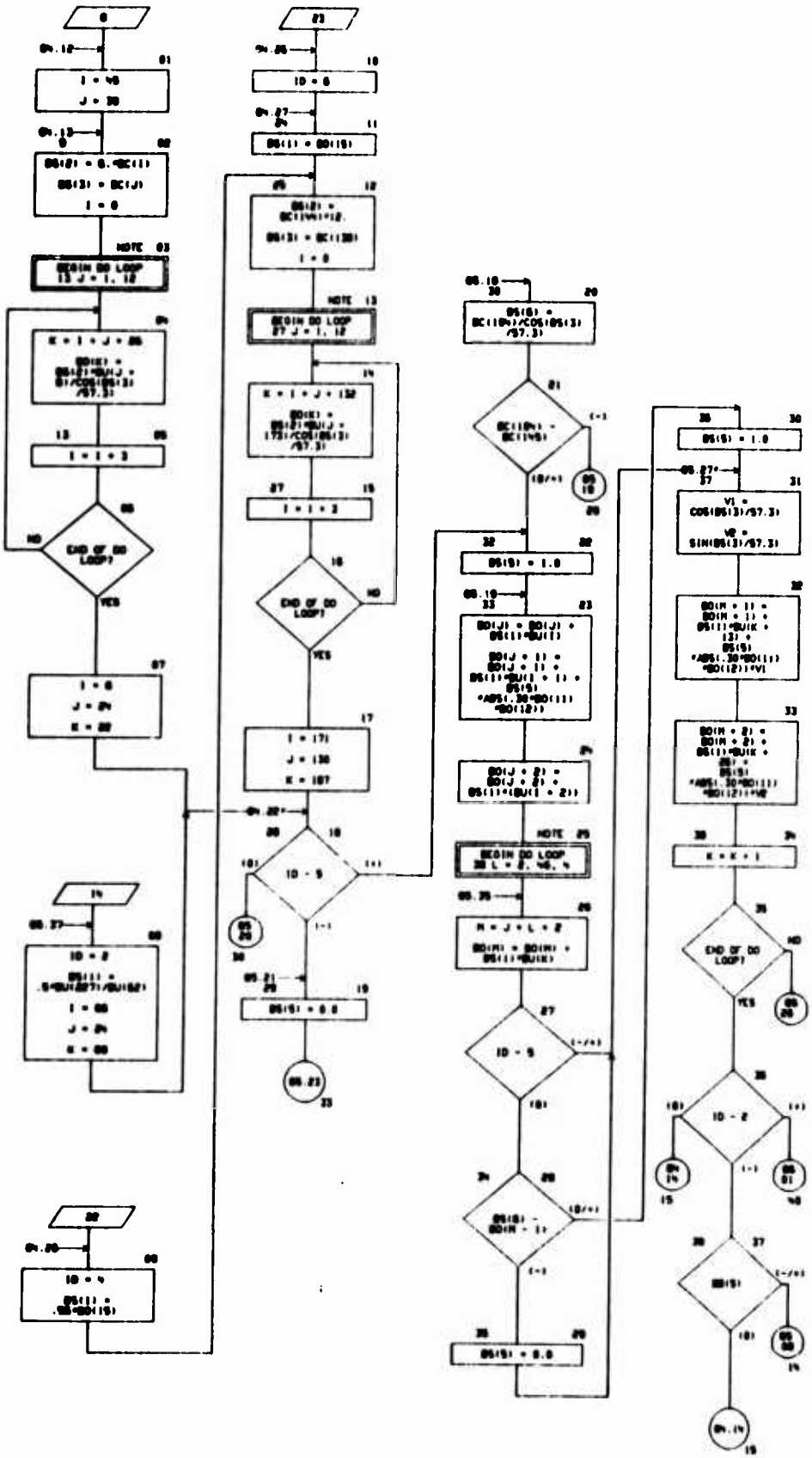

CHART TITLE - SUBROUTINE SPAN

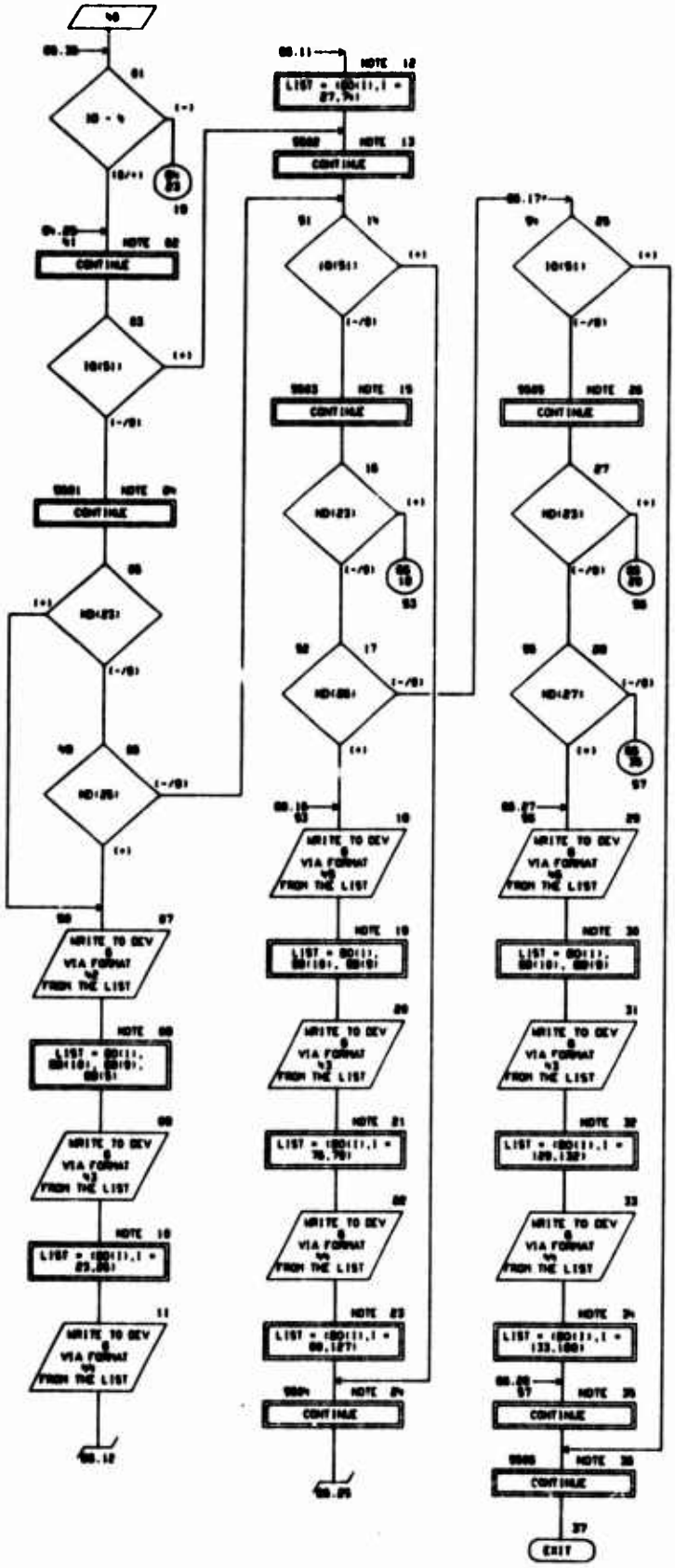

CHART TITLE - NON-PROCEDURAL STATEMENTS

```
      COMMON TCOM(4400)
      COMMON /IPRINT/10(80)
      DIMENSION BB(20),BC(195),BO(620),BS(20),BU(220),ND(200)
      EQUIVALENCE (BC(1),TCOM(2750)),(BU(1),TCOM(3153)),(BO(1),TCOM(330)
     )),(BS(1),TCOM(2973)),(BB(1),TCOM(2953)),(ND(1),TCOM(420))),(IP,ND
     (137)),(IB,ND(194)),(I,ND(195)),(J,ND(196)),(K,ND(197)),(L,ND(198)
     ),(M,ND(199))
42    FORMAT(1H1,3X,10HWING LOADS,3X,8HCOND NO=,F7.0,3X,3HMM=,F8.3,
       5X,4HALT=,F7.0,5X,3HDF=,F8.2,16X,20H** SPASM - IP(51) **)
43    FORMAT(1H0,3X,8HSOB DIST=,F7.2,2HIN,4X,10HSH AT SOB=,F9.0,2HLB,4X,
       10HSH AT SOB=,F12.0,5HIN-LB,4X,10HTH AT SOB=,F12.0,5HIN-LB///
       13X,7HSTATION,10X,5HSHEAR,10X,8HBEND MOM,21X,8HTORS MOM/
       14X,4H(IN),21X,4H(LB),15X,7H(IN-LB),22X,7H(IN-LB)/)
44    FORMAT(1H F19.2,F24.0,F26.0,F29.0)
45    FORMAT(1H1, 3X,21HHORIZONTAL TAIL LOADS,3X,8HCOND NO=,F7.0,3X,
       3HMM=,F8.3,5X,4HALT=,F7.0,19X,20H** SPASM - IP(51) **)
46    FORMAT(1H1,3X,15HVERTICAL TAIL LOADS,3X,8HCOND NO=,F7.0,3X,
       3HMM=,F8.3,5X,4HALT=,F7.0,21X,20H** SPASM - IP(51) **)
```

CHART TITLE - INTRODUCTORY COMMENTS

```
((((((((((((((((((((((((((((((((((((((((((((((((((((((((((((((((((((((
                    SUBROUTINE USPAN
))))))))))))))))))))))))))))))))))))))))))))))))))))))))))))))))))))))
```

CHART TITLE - SUBROUTINE USPAN

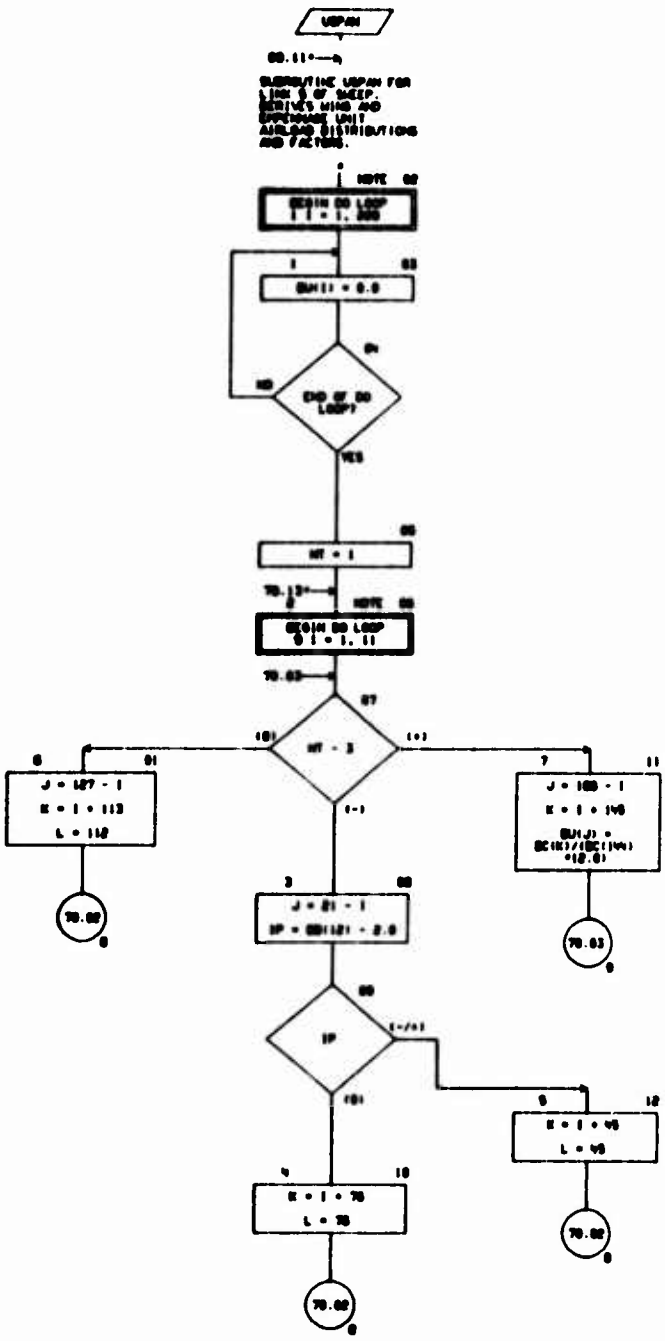

CHART TITLE - SUBROUTINE VRPAN

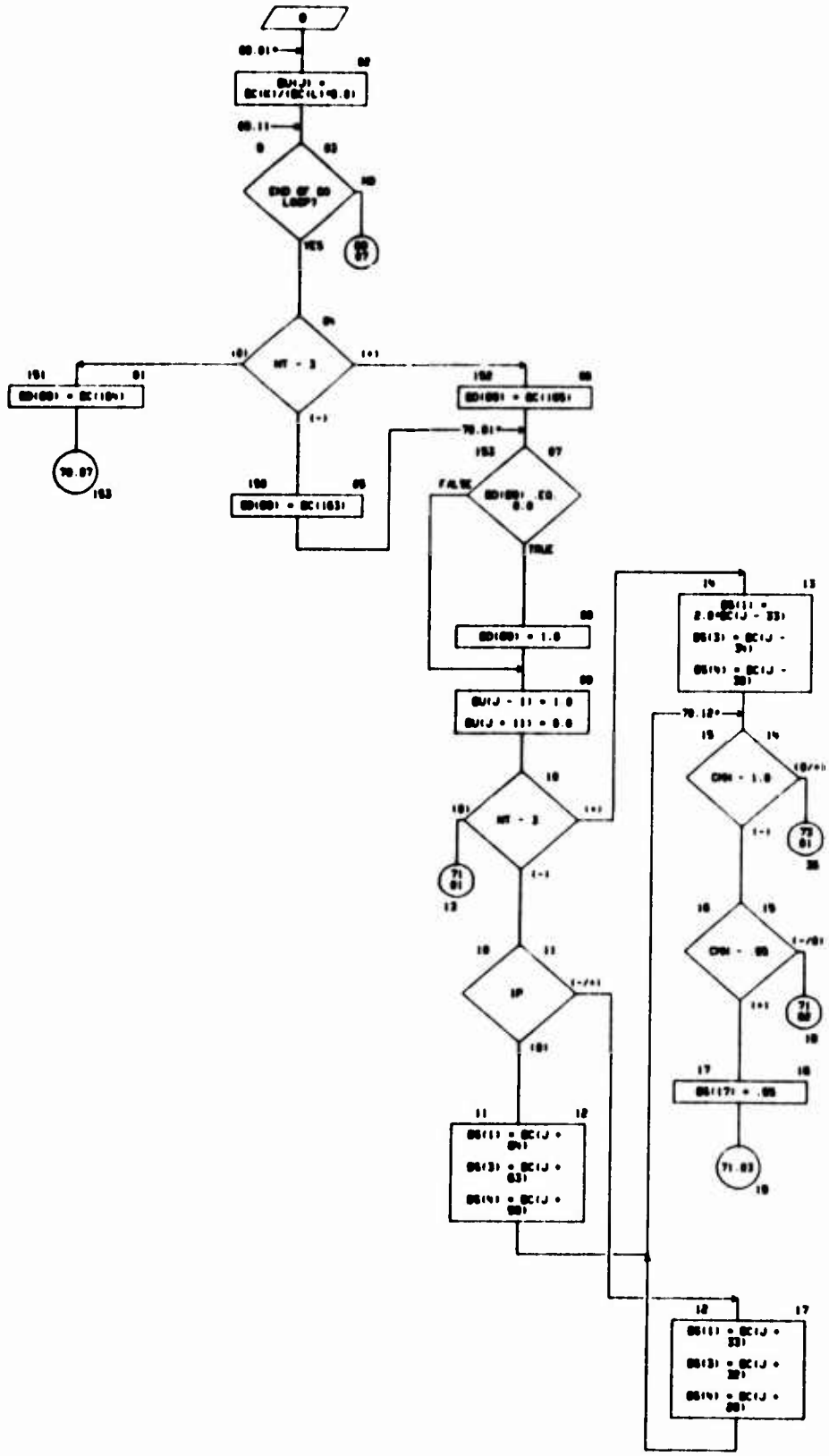

CHART TITLE - SUBROUTINE USPAN

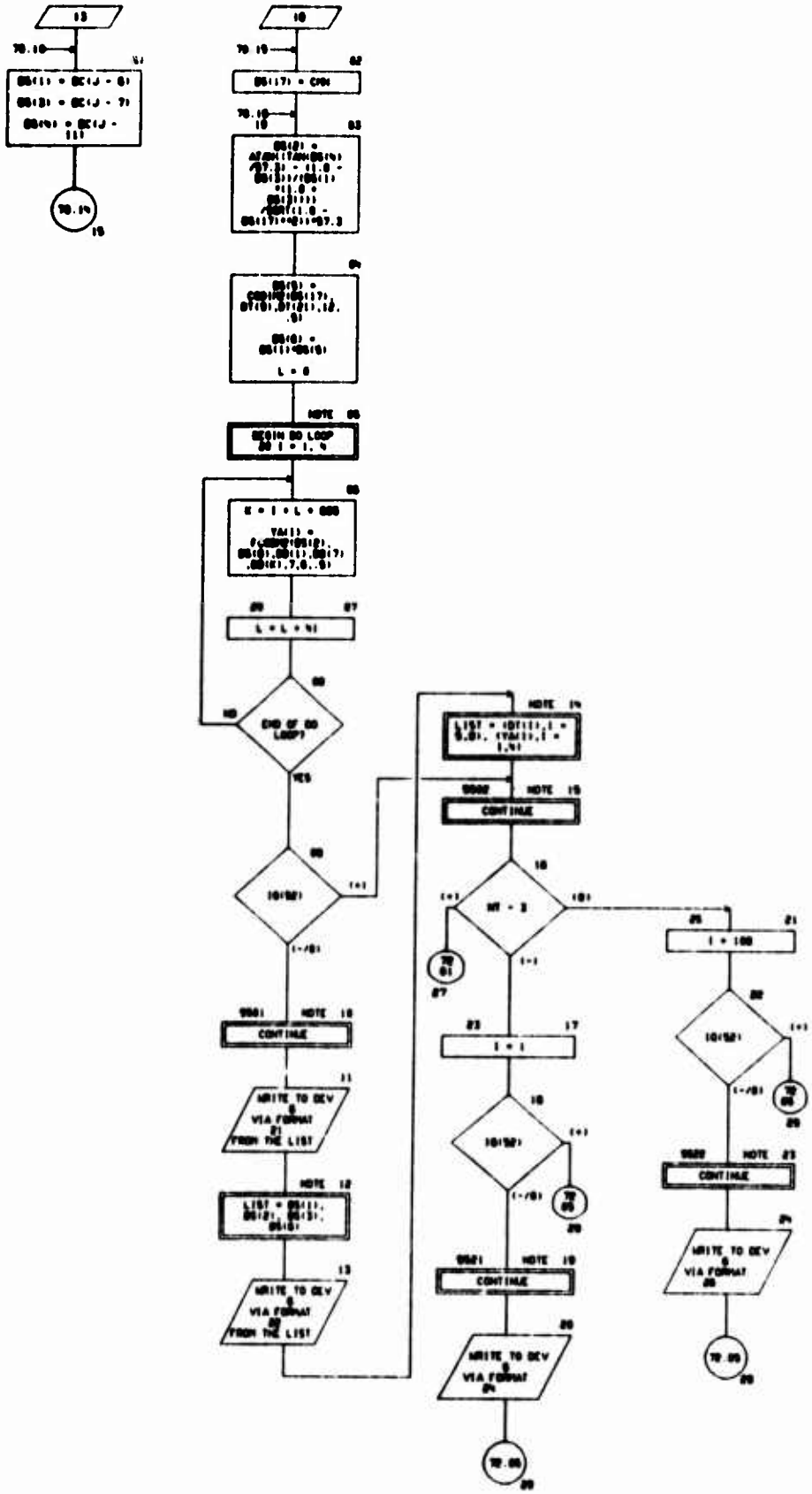

CHART TITLE - SUBROUTINE UPAN

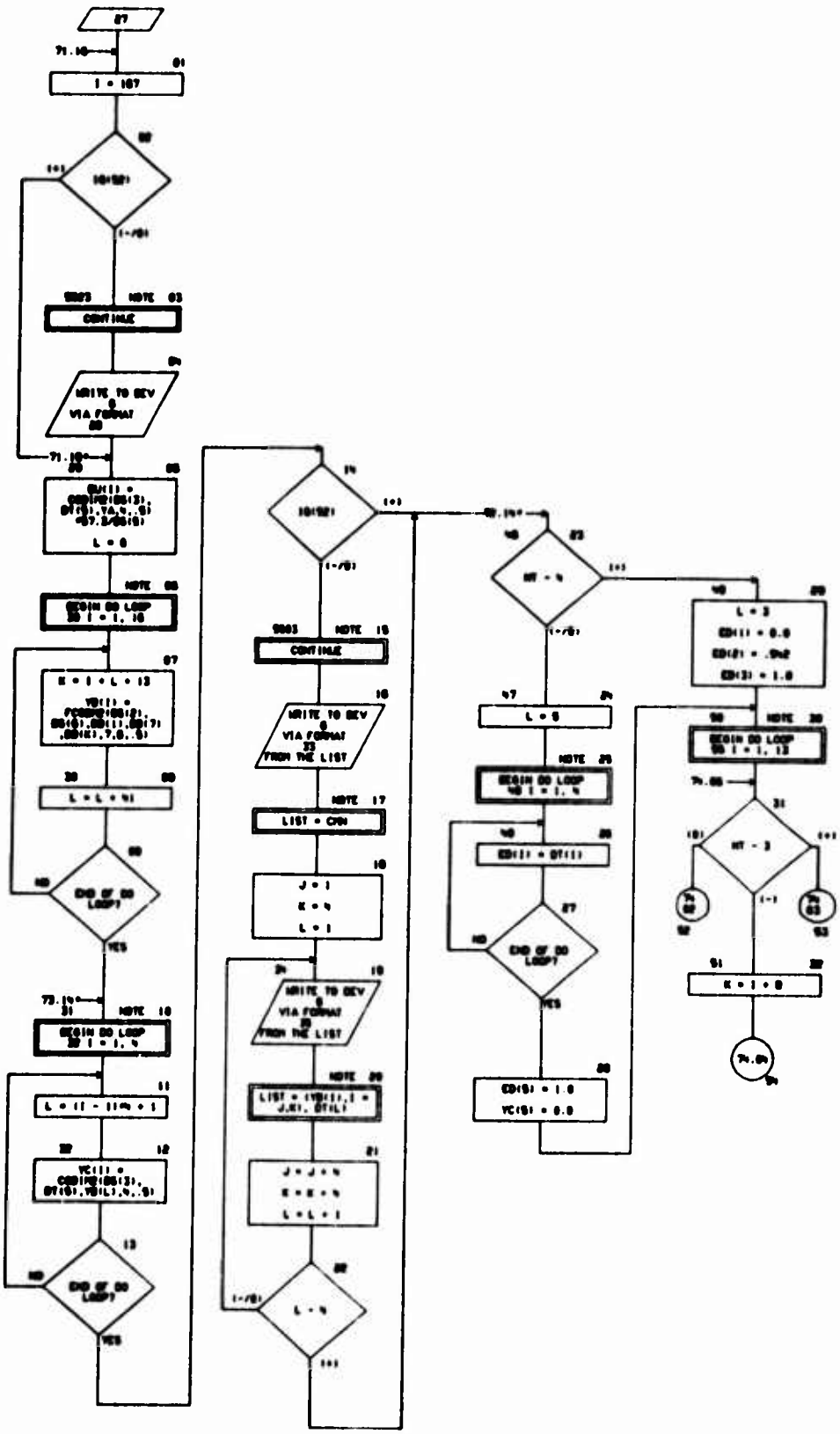

CHART TITLE - SUBROUTINE VRPAN

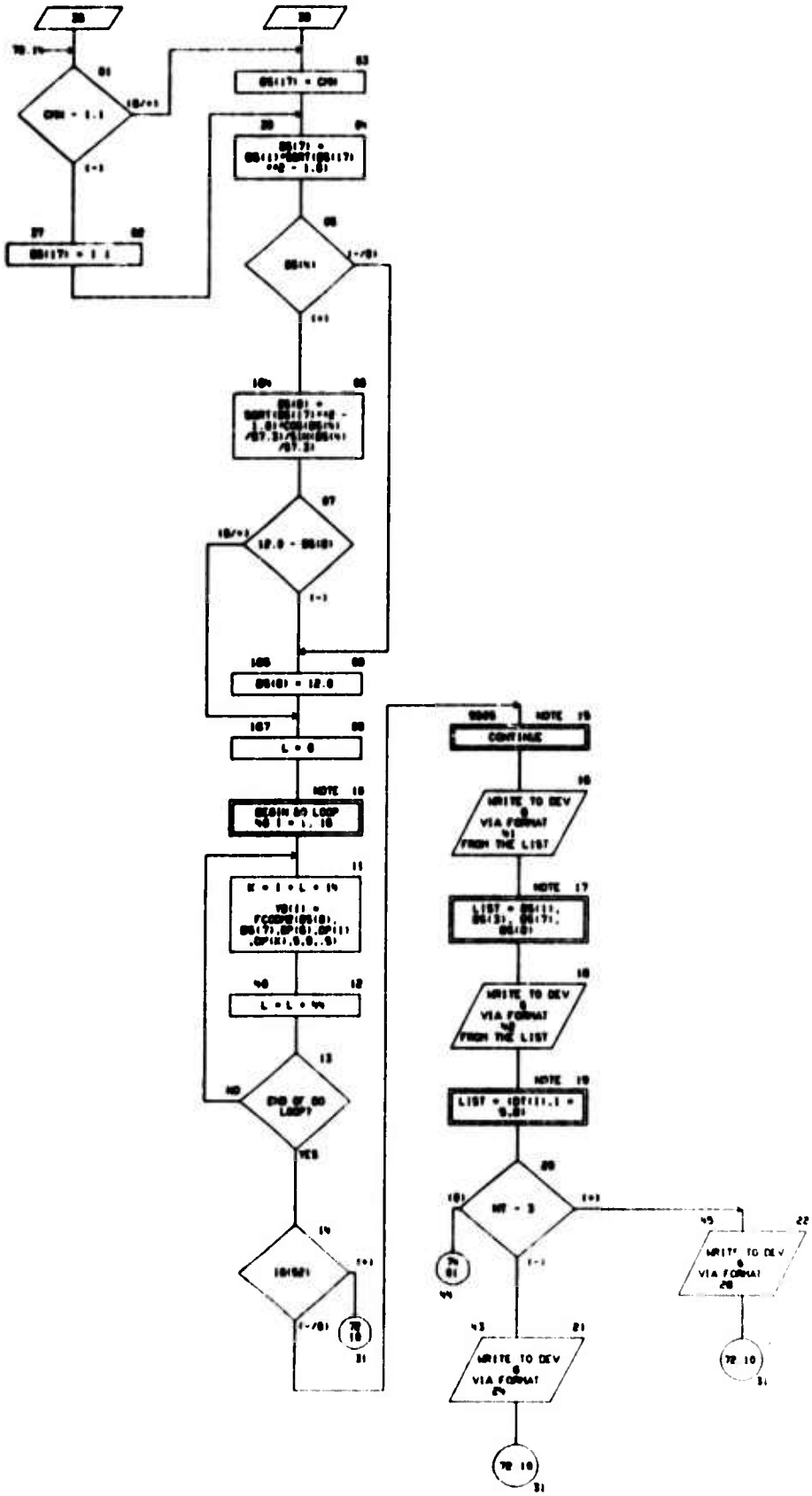

CHART TITLE - SUBROUTINE USPAN

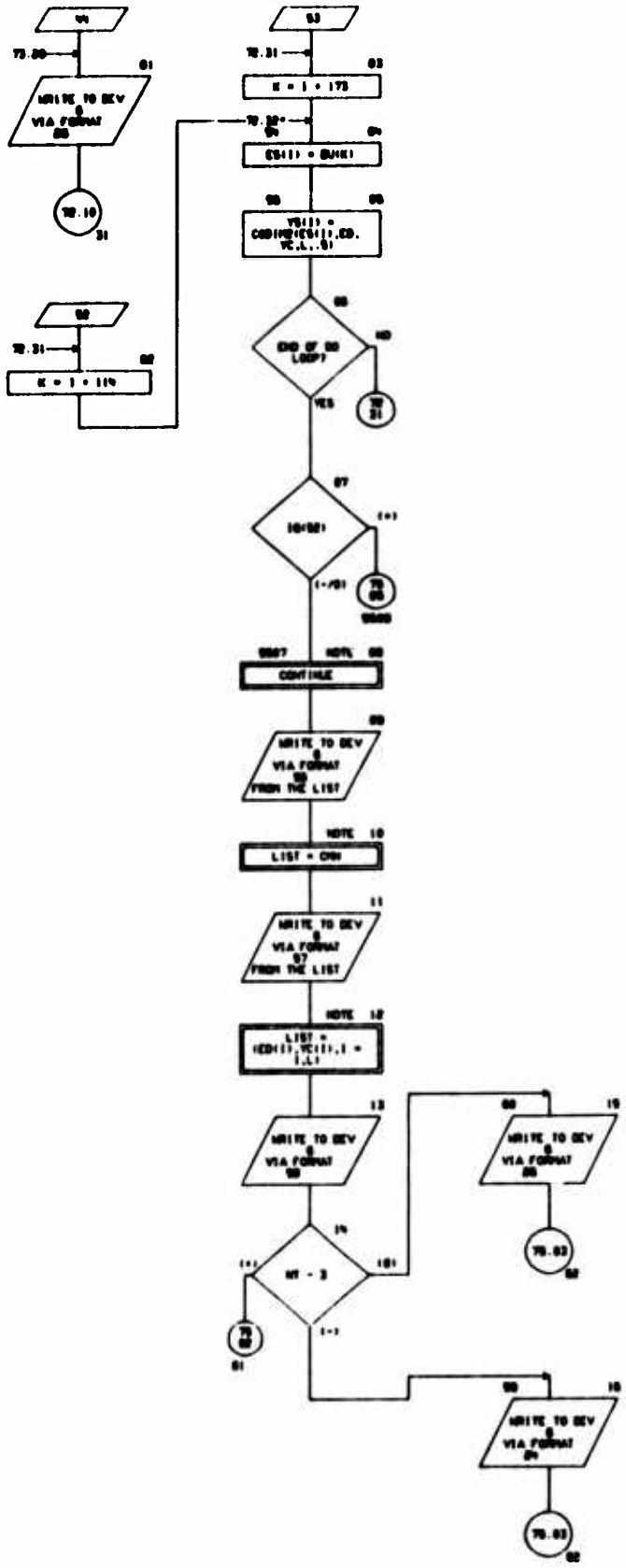

CHART TITLE - SUBROUTINE UAPAN

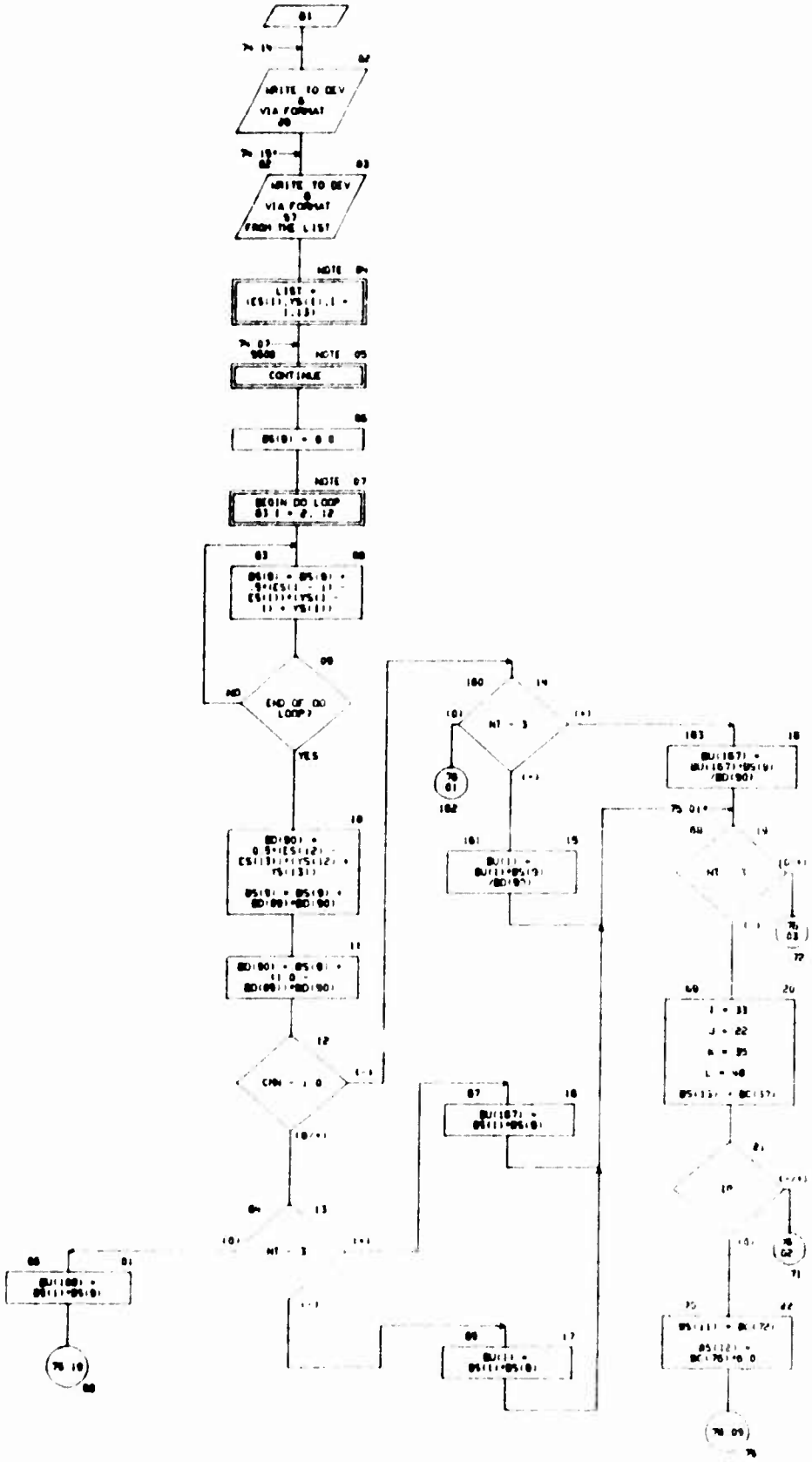

CHART TITLE - SUBROUTINE UDPAN

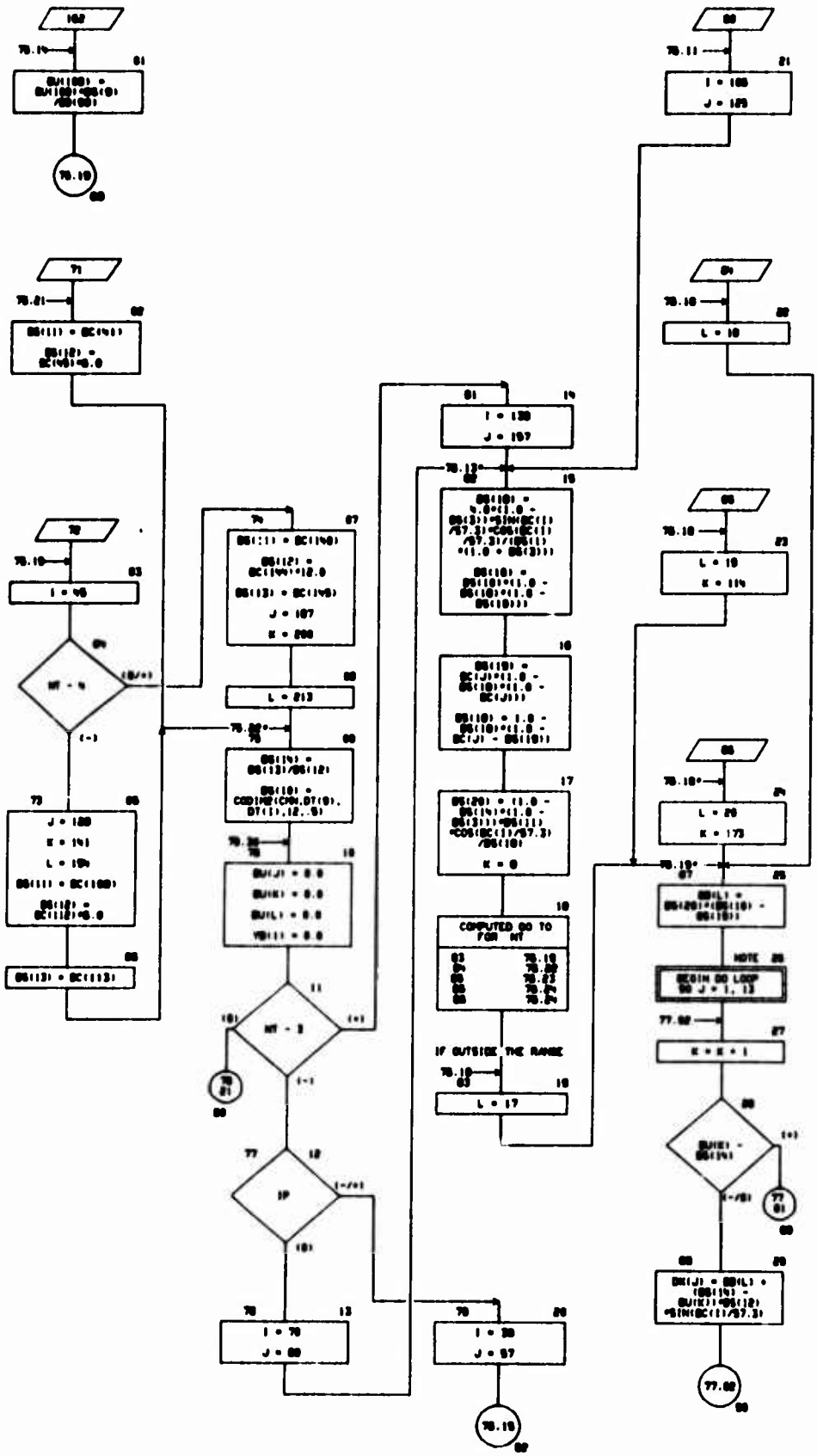

CHART TITLE - SUBROUTINE URPAN

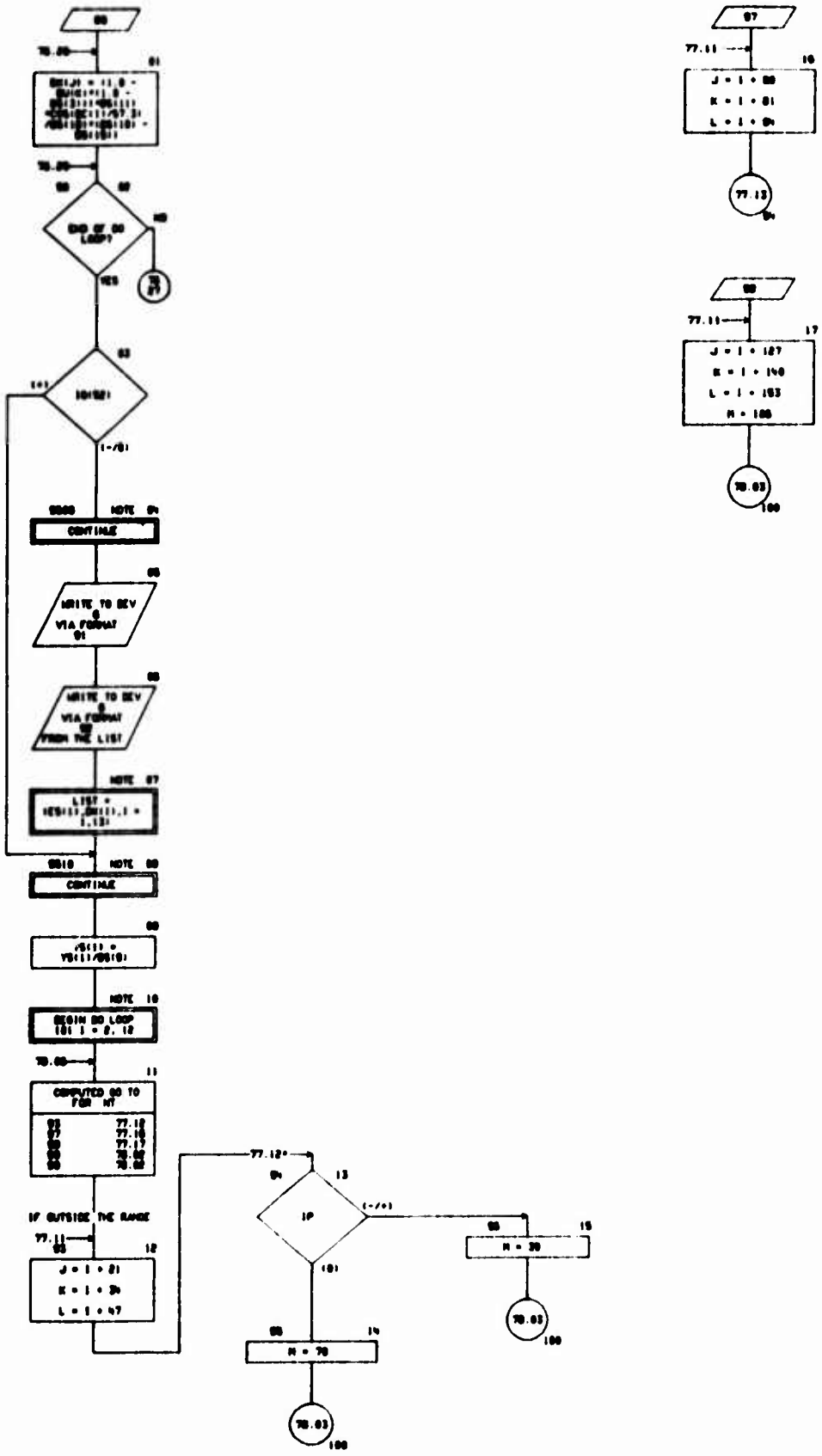

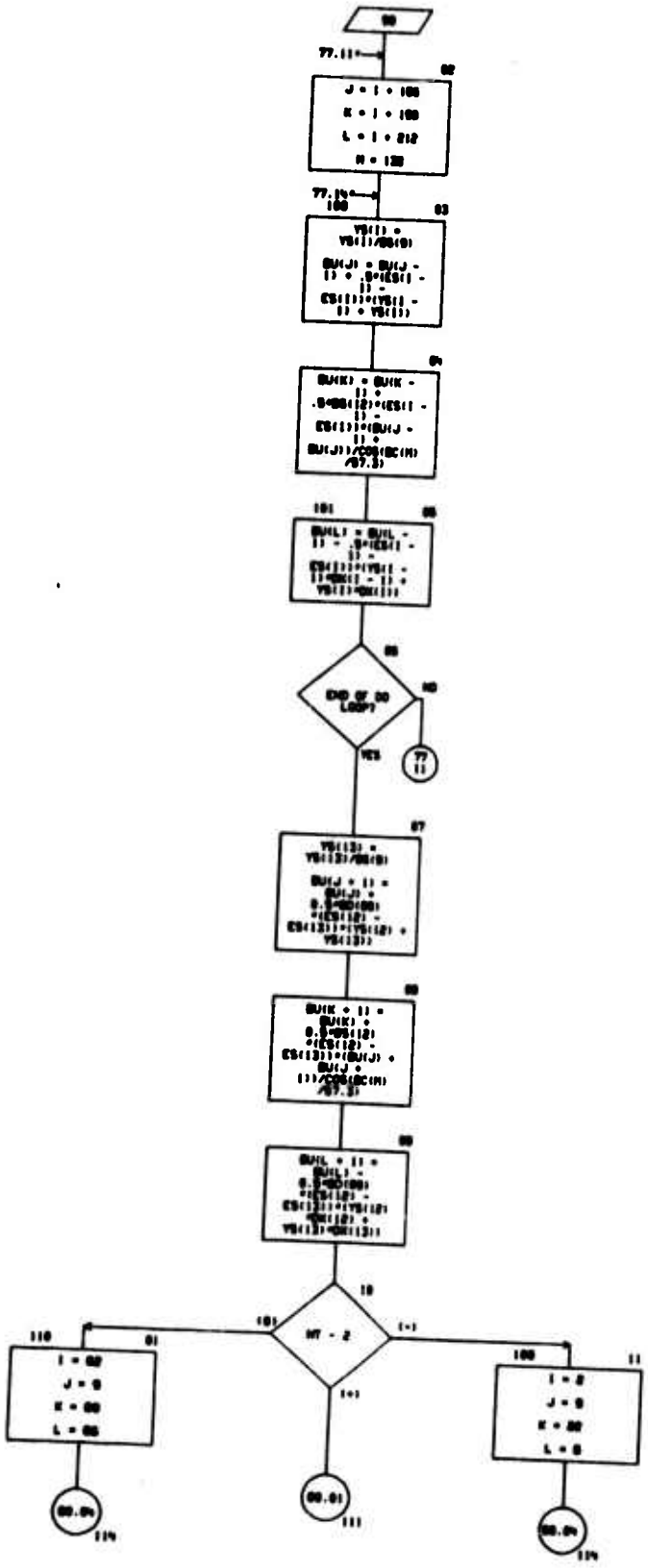
J = I + 100
K = I + 100
L = I + 212
N = 120
END OF DO LOOP?
YES
NO
NT - 2

CHART TITLE - SUBROUTINE USPAN

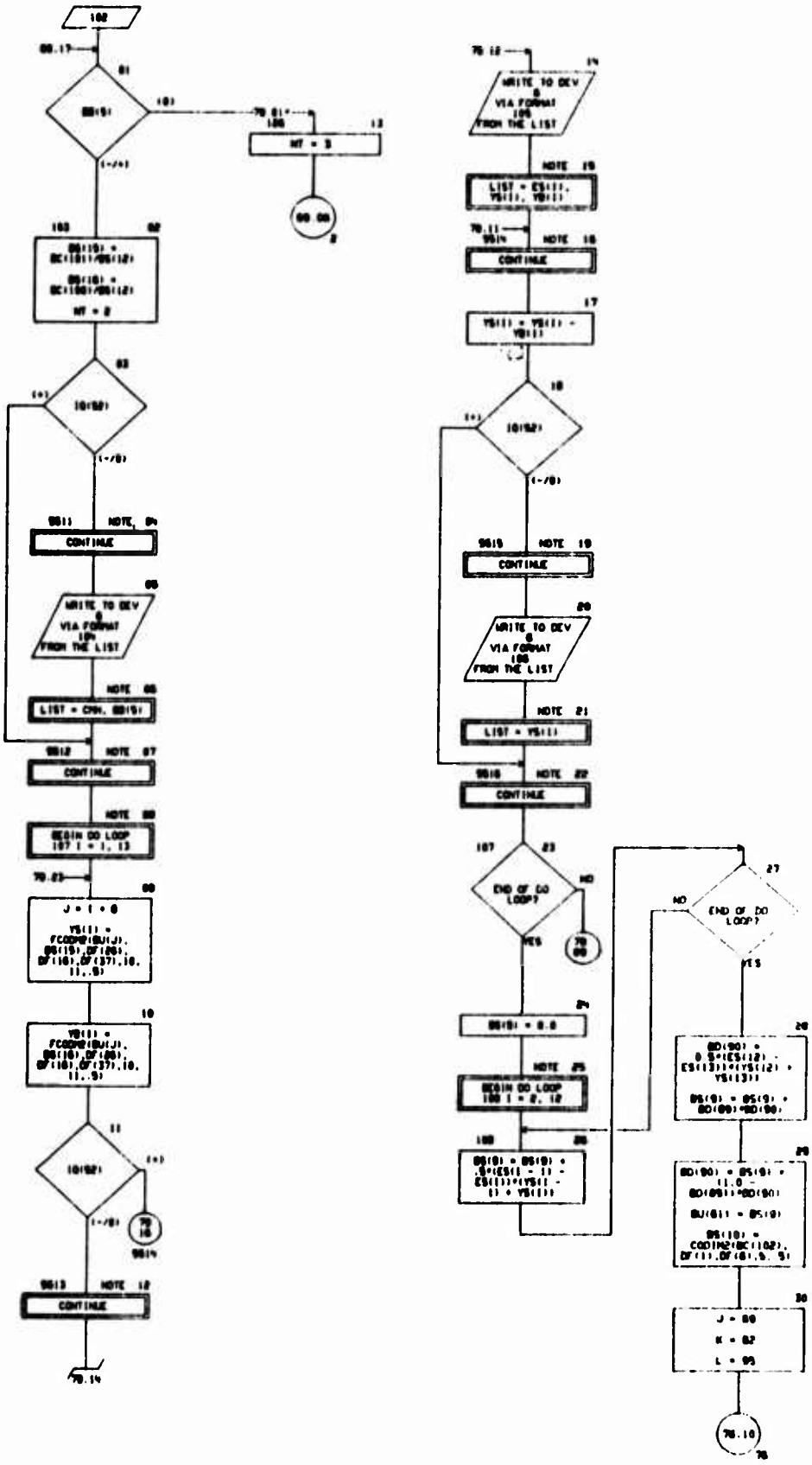

CHART TITLE - SUBROUTINE UXPAN

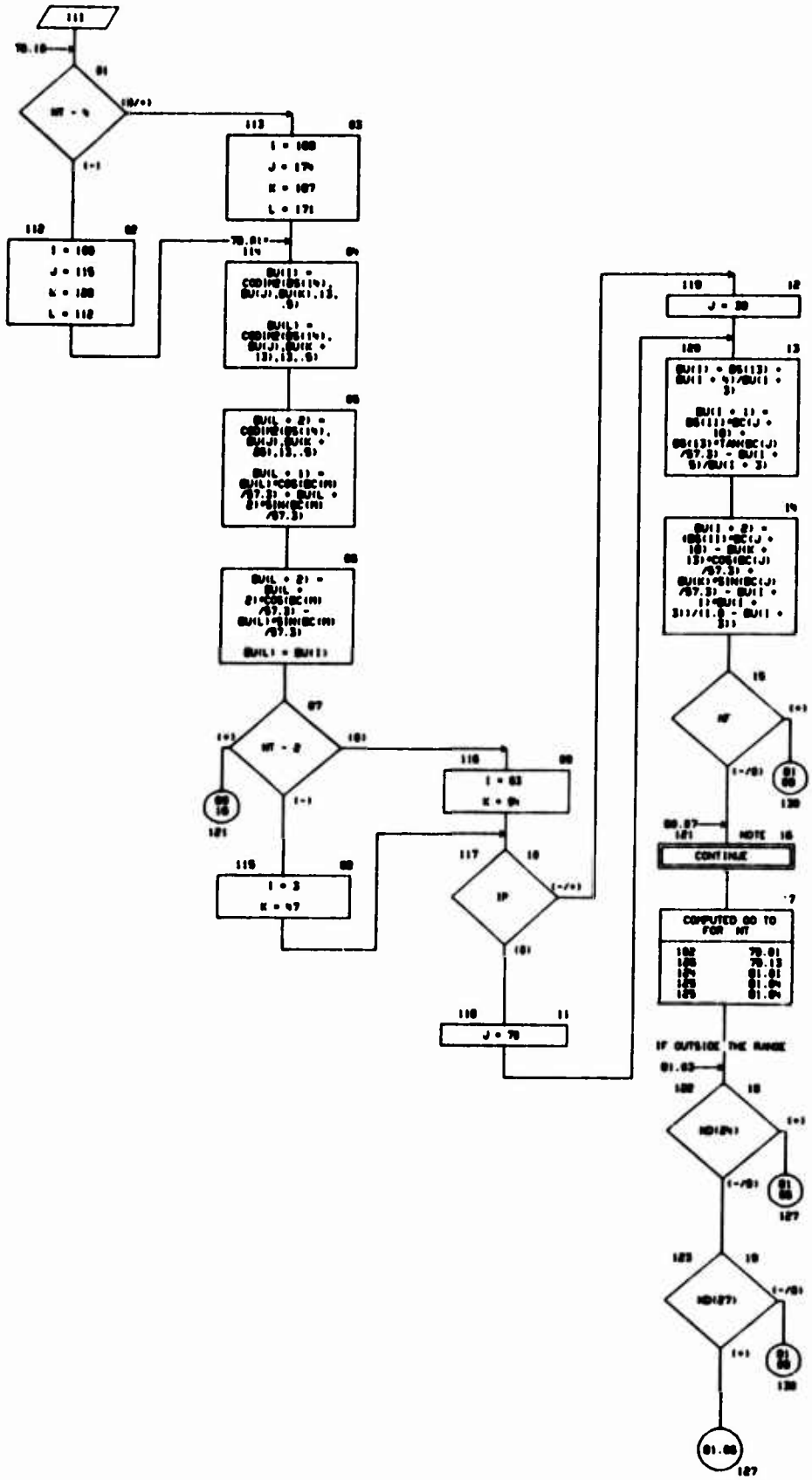

CHART TITLE - SUBROUTINE USPAN

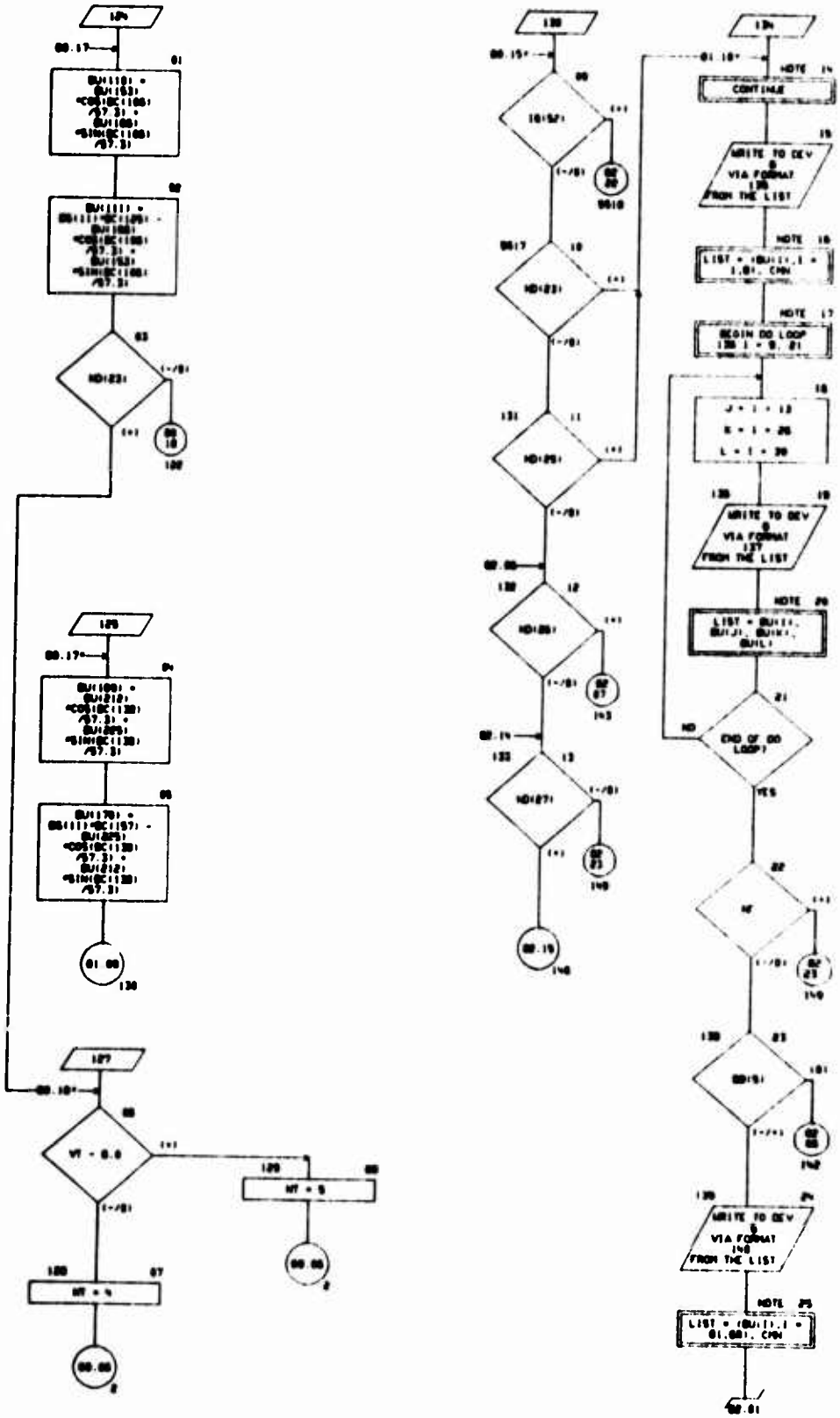

CHART TITLE - SUBROUTINE USPAN

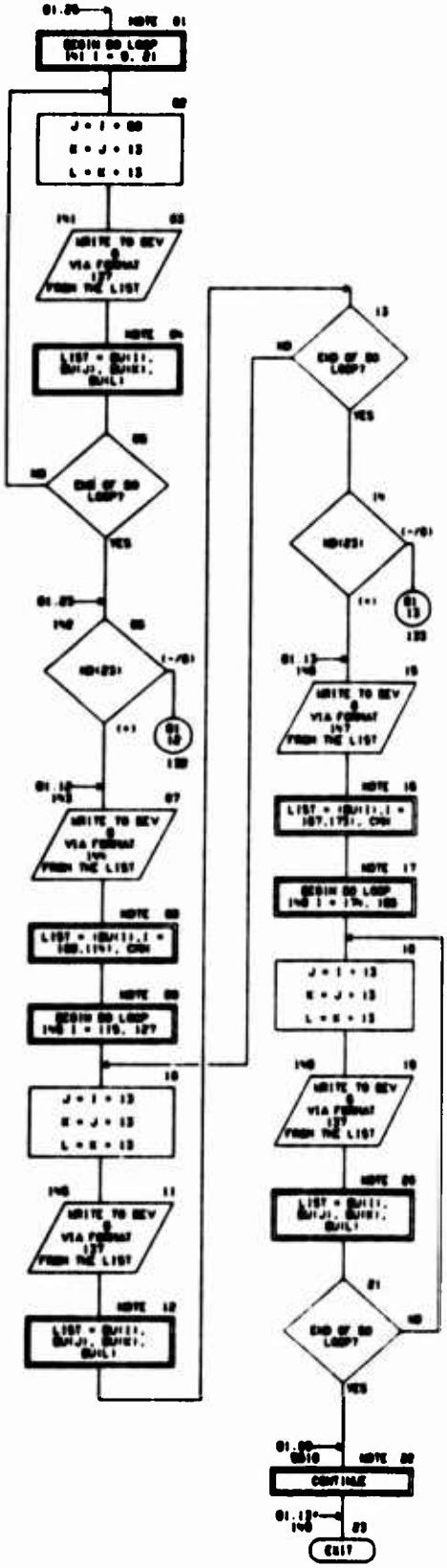

CHART TITLE - NON-PROCEDURAL STATEMENTS

```
      COMMON TCOM(4400)
      COMMON /IPRINT/IO(80)
      DIMENSION ND(200),DT(56),DD(053),DF(140),DP(72),DC(100),DD(20),DD
     (20),DD(100),DU(200),YA(5),YD(20),YC(5),YS(15),ED(5),ES(15),DX(15)
      EQUIVALENCE (DT(1),TCOM(100)),(DD(1),TCOM(196)),(DF(1),TCOM(600))
     ,(DP(1),TCOM(1100)),(ND(1),TCOM(1200)),(DC(1),TCOM(2700)),(DD(1),T
     COM(2803)),(DD(1),TCOM(2873)),(DD(1),TCOM(2903)),(DU(1),TCOM(3153)
     ),(COM,DD(10)),(YY,DD(14)),(YA(1),DD(1)),(YD(1),DD(8)),(YC(1),DD(2
     0)),(YS(1),DD(5)),(ED(1),DD(3)),(ES(1),DD(30)),(DX(1),DD(08)),(N
     T,ND(135)),(NF,ND(100)),(L,ND(132)),(J,ND(133)),(K,ND(134)),(L,ND(
     135)),(IP,ND(137)),(M,ND(140))
21    FORMAT(1H1,80X,20H** UBPAN - IP(52) **//
       11X,33HVALUES FROM SCLA/X TABLES FOR AR=,F8.4,3X,4HGAM=,F8.2,3X,
       3HTR=,F7.4,3X,3HGA/X=,F8.4)
22    FORMAT(1H0,7X,3HTR=,4F10.2//11X,4F10.5)
24    FORMAT(1H+,53X,8H(MING) )
25    FORMAT(1H+,53X,10H(HER TAIL) )
26    FORMAT(1H+,53X,11H(VERT TAIL) )
33    FORMAT(1H0,10X,3HVALUES FROM LOADING TABLES FOR M=,F8.3)
35    FORMAT(1H0,10X,4F10.5,3X,4HSTA=,F8.3)
41    FORMAT(1H1,7X,3HAR=,F8.4,3X,3HTR=,F7.4,3X,3HGA=,F8.4,3X,3HM=,
       F8.4,30X,20H** UBPAN - IP(52) **)
42    FORMAT(1H0,7X,3HTR=,4F10.2)
55    FORMAT(1H1,10X,7HSTATION,10X,24HLOADING AT DATA STATIONS,5X,3HM=,
       F8.3,5X,20H** UBPAN - IP(52) **)
57    FORMAT(1H 8F17.5)
58    FORMAT(1H0,10X,7HSTATION,10X,25HLOADING-ANALYSIS STATIONS)
61    FORMAT(1H0,10X,7HSTATION,10X,8HX SWEEP)
62    FORMAT(1H F17.5,F17.3)
100   FORMAT(1H1,80X,20H** UBPAN - IP(52) **//
       11X,7HSTATION,10X,8HDIVIS LENG,10X,8HINBD LENG 10X,8HFLAP INCR,
       5X,3HM=,F8.3,5X,3HBF=,F8.2)
102   FORMAT(1H F17.5,F10.5,F10.5)
103   FORMAT(1H+8HF10.5)
130   FORMAT(1H1,6X,19HWING PARAMETERS 80X,20H** UBPAN - IP(52) **
       //7X,4HCLA=,F8.5,4X,7HGAM(B)A=,F7.5,4X,7HYM(B)A=,F7.2,4X,
       8HGSM(B)A=,F8.2,4X,8HGSM(M)A=,F8.2//7X,18HSIZE OF BODY UNITS,//
       7X,8HAUBB=,F8.5,4X,8HAPBB=,F8.3,4X,8HAPYB=,F8.3//7X,
       27HSPANWISE UNIT DISTRIBUTIONS//6X,3HSTA,7X,7HAUBZW(B),4X,
       7HAPBW(B),4X,7HAPYW(B),5X,3HM=,F8.3/6X,5HSWEEP,10X,5HSWEEP,
       6X,5HSWEEP/)
137   FORMAT(1H 6F7.4,F12.5,2F11.3)
140   FORMAT(1H1,6X,20HFLAPS DEFLECTED PARAMETERS,57X,
       20H** UBPAN - IP(52) **//7X,4HDEF=,F8.5,4X,7HGM(B)F=,F7.5,4X,
       7HYM(B)F=,F7.2,4X,8HGSM(B)F=,F8.2,4X,8HGSM(M)F=,F8.2//7X,
       18HSIZE OF BODY UNITS//7X,8HAUBZF=,F8.5,4X,8HAPBF=,F8.3,4X,
       8HAPYF=,F8.3//7X,27HSPANWISE UNIT DISTRIBUTIONS//6X,3HSTA,7X,
       7HAUBZF(B),4X,7HAPBF(B),4X,7HAPYF(B),5X,3HM=,F8.3/6X,5HSWEEP,10X,
       5HSWEEP,6X,5HSWEEP/)
144   FORMAT(1H1,6X,19HHER TAIL PARAMETERS,64X,20H** UBPAN - IP(52) **//
       7X,4HCLA=,F8.5,4X,8HGM(B)=,F7.5,4X,3HYM=,F7.2,4X,4HGA=,F8.2//7X,
       18HSIZE OF BODY UNITS//7X,8HAUBZH=,F8.5,4X,8HAPBH=,F8.3,4X,
       8HAPYH=,F8.3//7X,27HSPANWISE UNIT DISTRIBUTIONS//6X,3HSTA,7X,
       7HAUBZH(B),4X,7HAPBH(B),4X,7HAPYH(B),5X,3HM=,F8.3/6X,5HSWEEP,10X,
       5HSWEEP,6X,5HSWEEP/)
147   FORMAT(1H1,6X,20HVERT TAIL PARAMETERS,63X,20H** UBPAN - IP(52) **/
       /7X,4HCV=,F8.5,4X,8HGV(B)=,F7.5,4X,4HDZV=,F7.2,4X,4HDX=,F8.2//
       7X,18HSIZE OF BODY UNITS//7X,8HAUBVV=,F8.5,4X,8HAPBVV=,F8.3,4X,
       8HAPYV=,F8.3//7X,27HSPANWISE UNIT DISTRIBUTIONS//6X,3HSTA,7X,
       7HAUBVV(B),4X,7HAPBVV(B),4X,7HAPYV(B),5X,3HM=,F8.3/6X,5HSWEEP,10X,
       5HSWEEP,6X,5HSWEEP/)
```

CHART TITLE - INTRODUCTORY COMMENTS

''''''''''''''''''''''''''''''''''''''''''''''''''''''''''''''''''''''''''''''''

SUBROUTINE WAKECT

''''''''''''''''''''''''''''''''''''''''''''''''''''''''''''''''''''''''''''''''

CHART TITLE - SUBROUTINE WANAE1

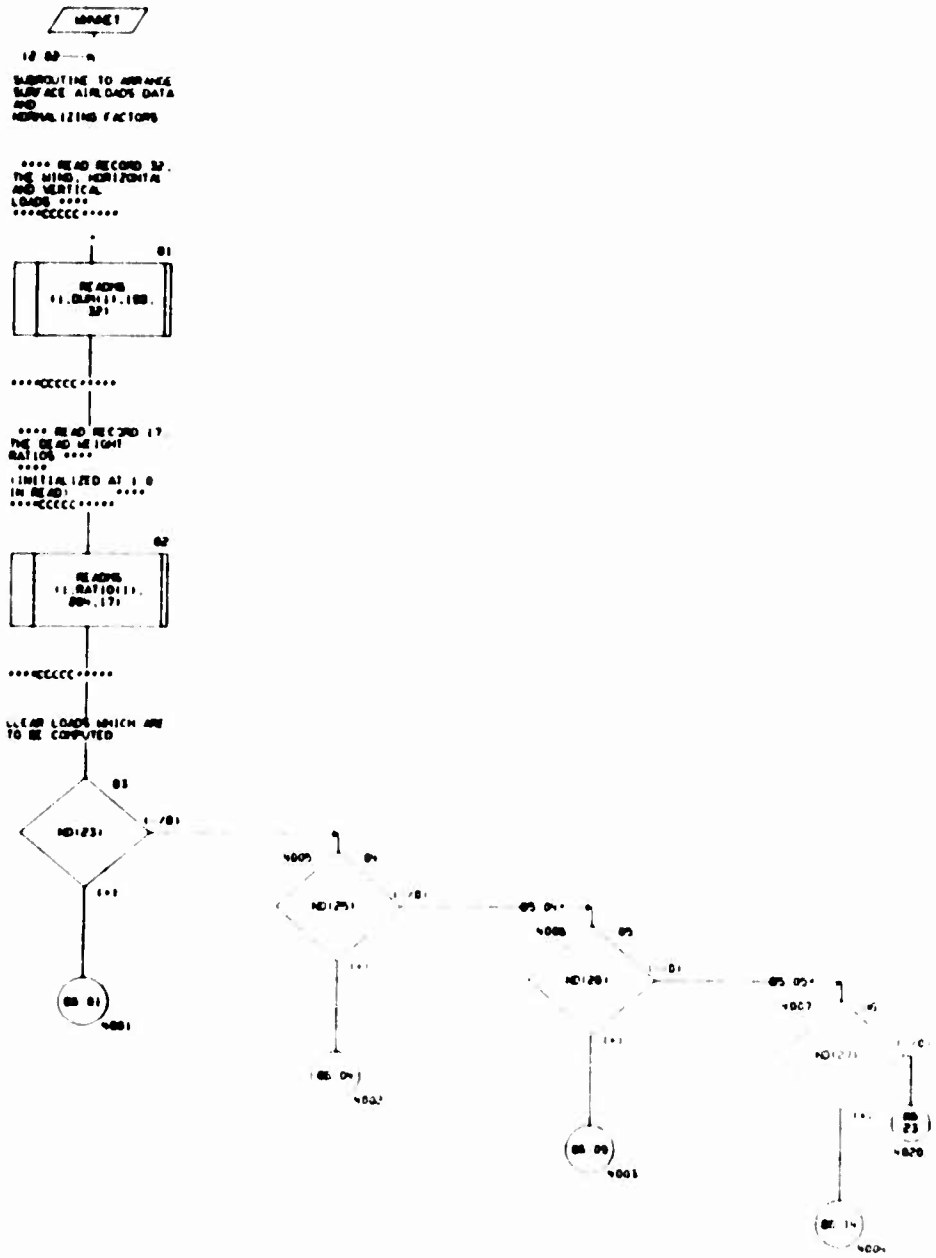

CHART TITLE - SUBROUTINE MANNET

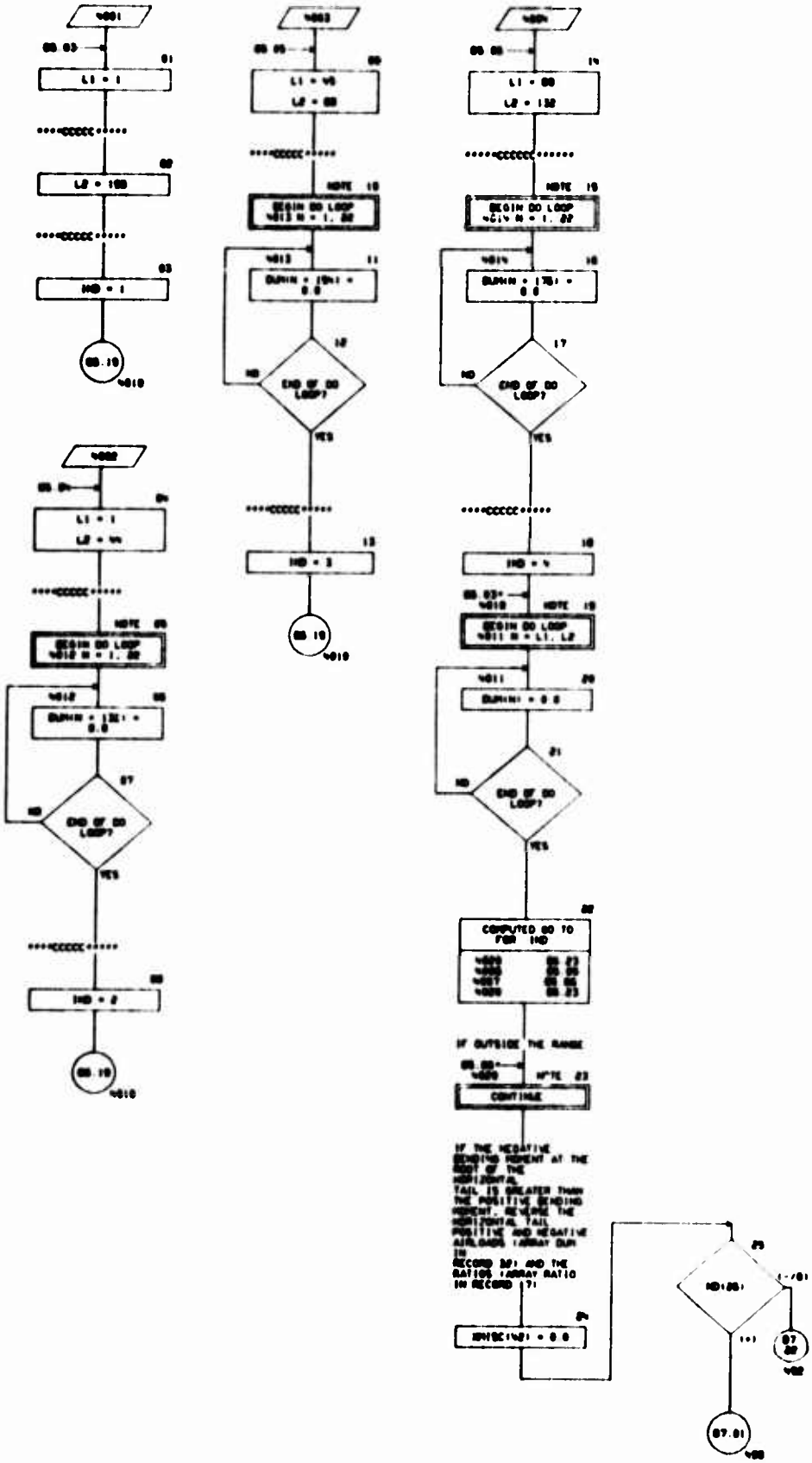

CHART TITLE - SUBROUTINE WINGET

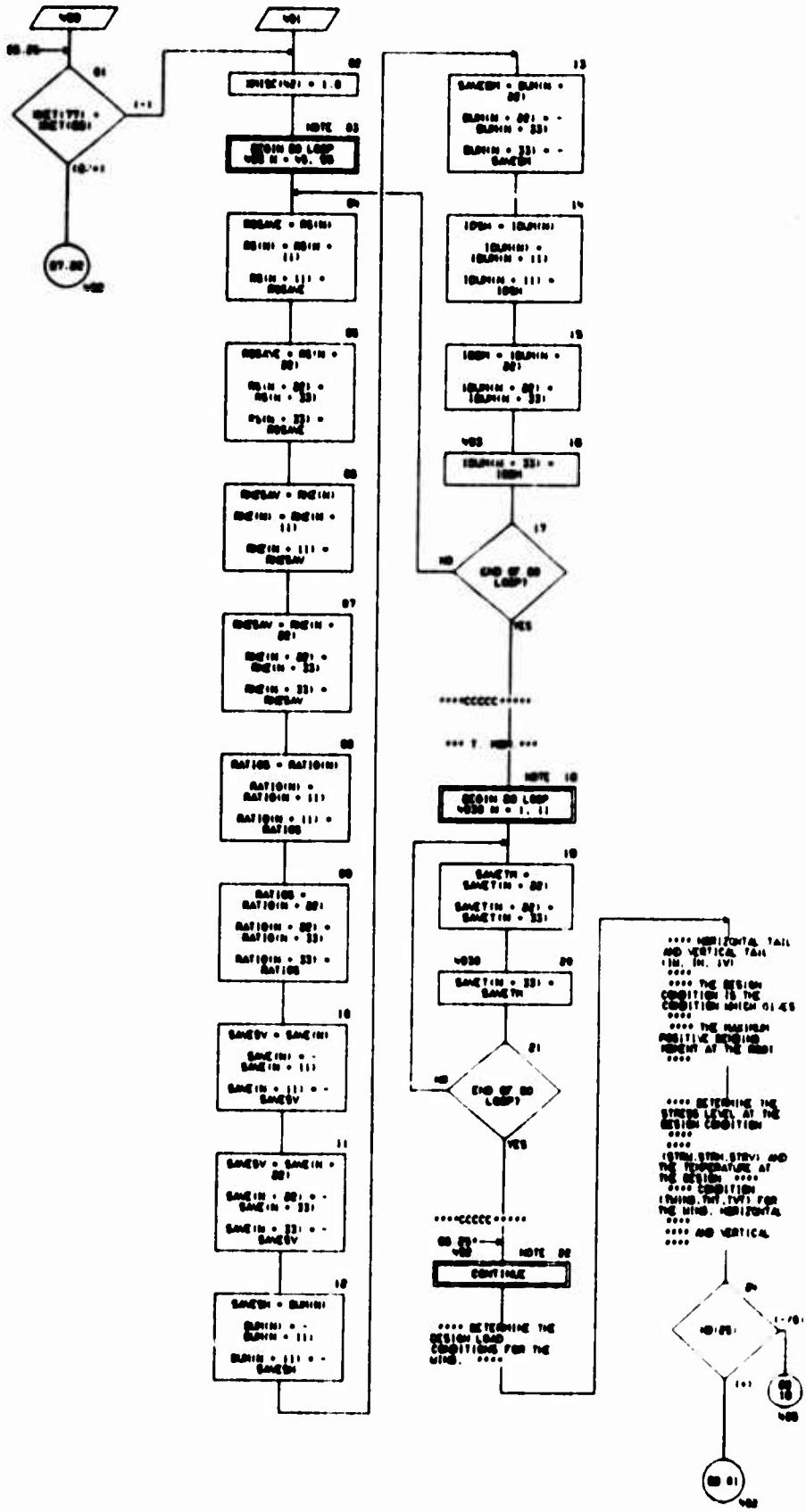

CHART TITLE - SUBROUTINE MAGET

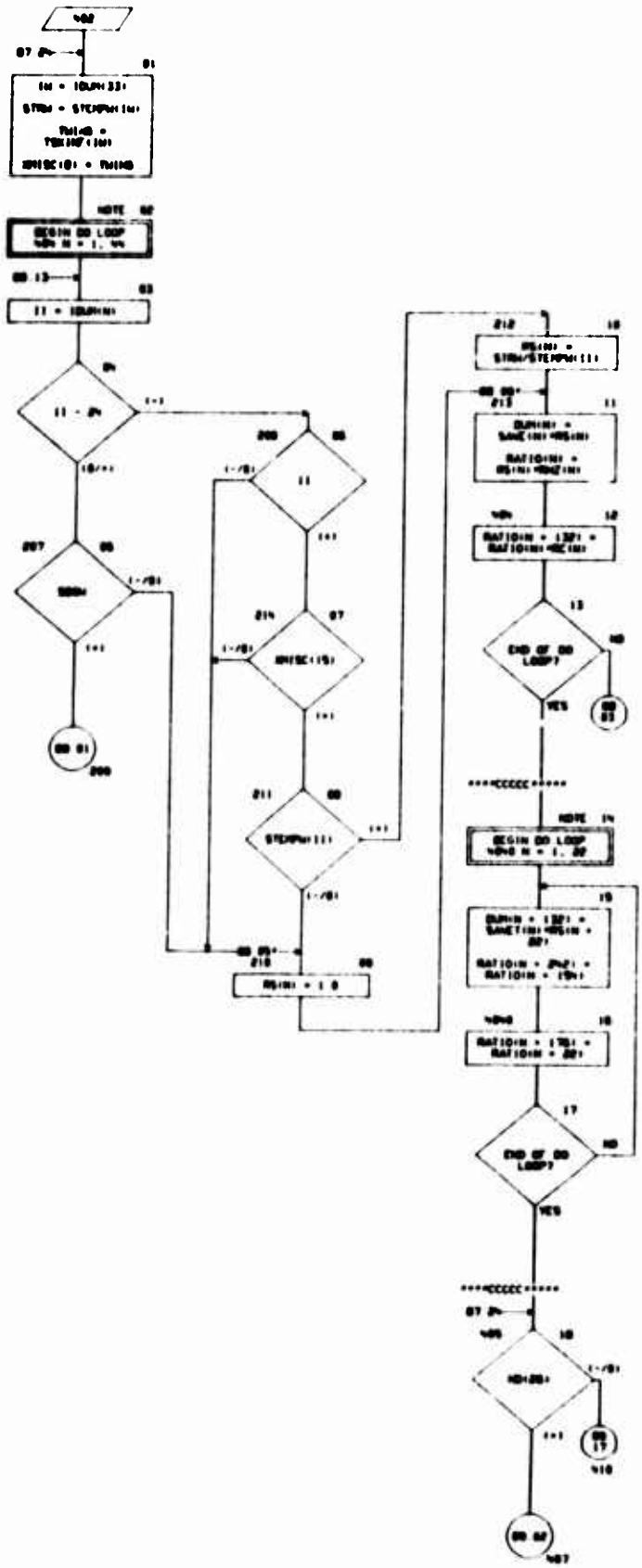

CHART TITLE - SUBROUTINE WAVE1

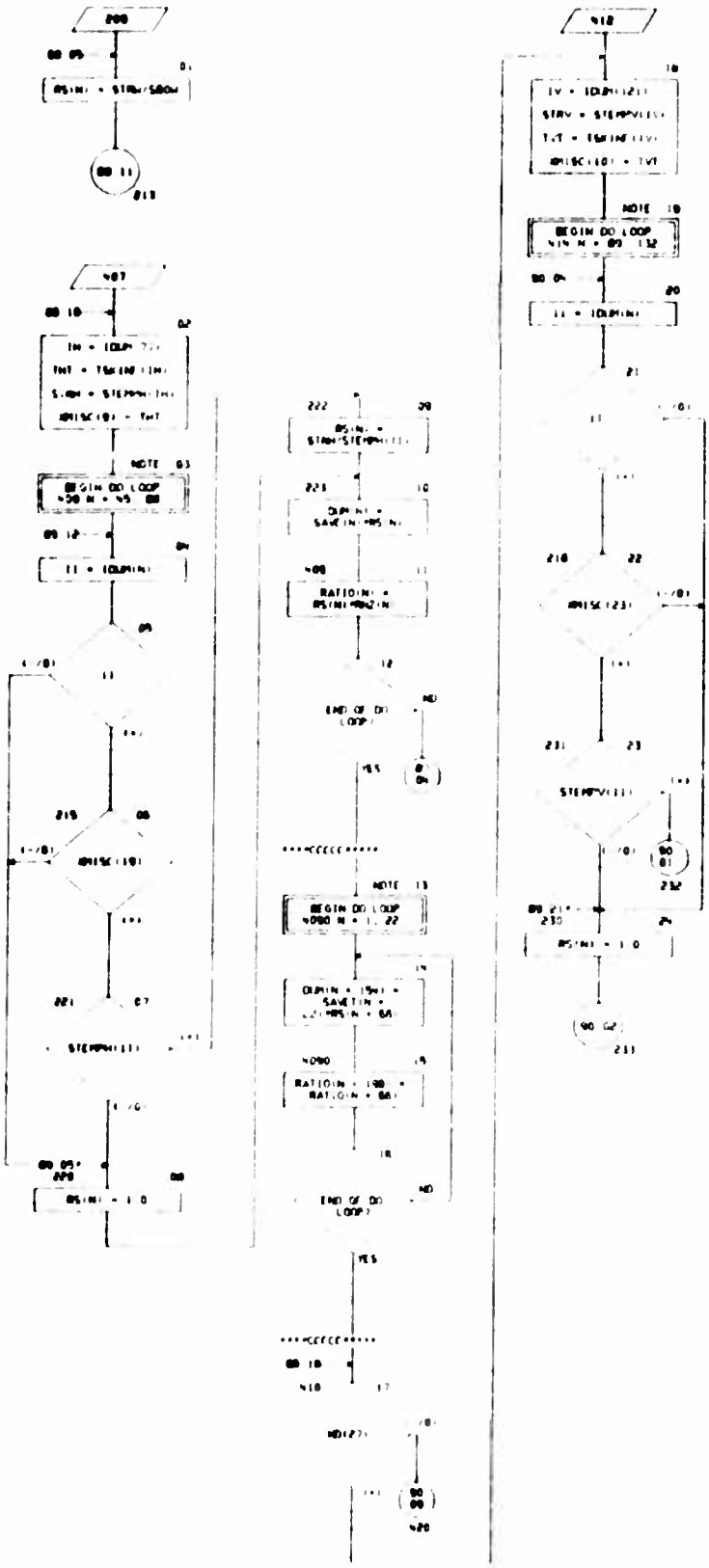

CHART TITLE - SUBROUTINE HAMET

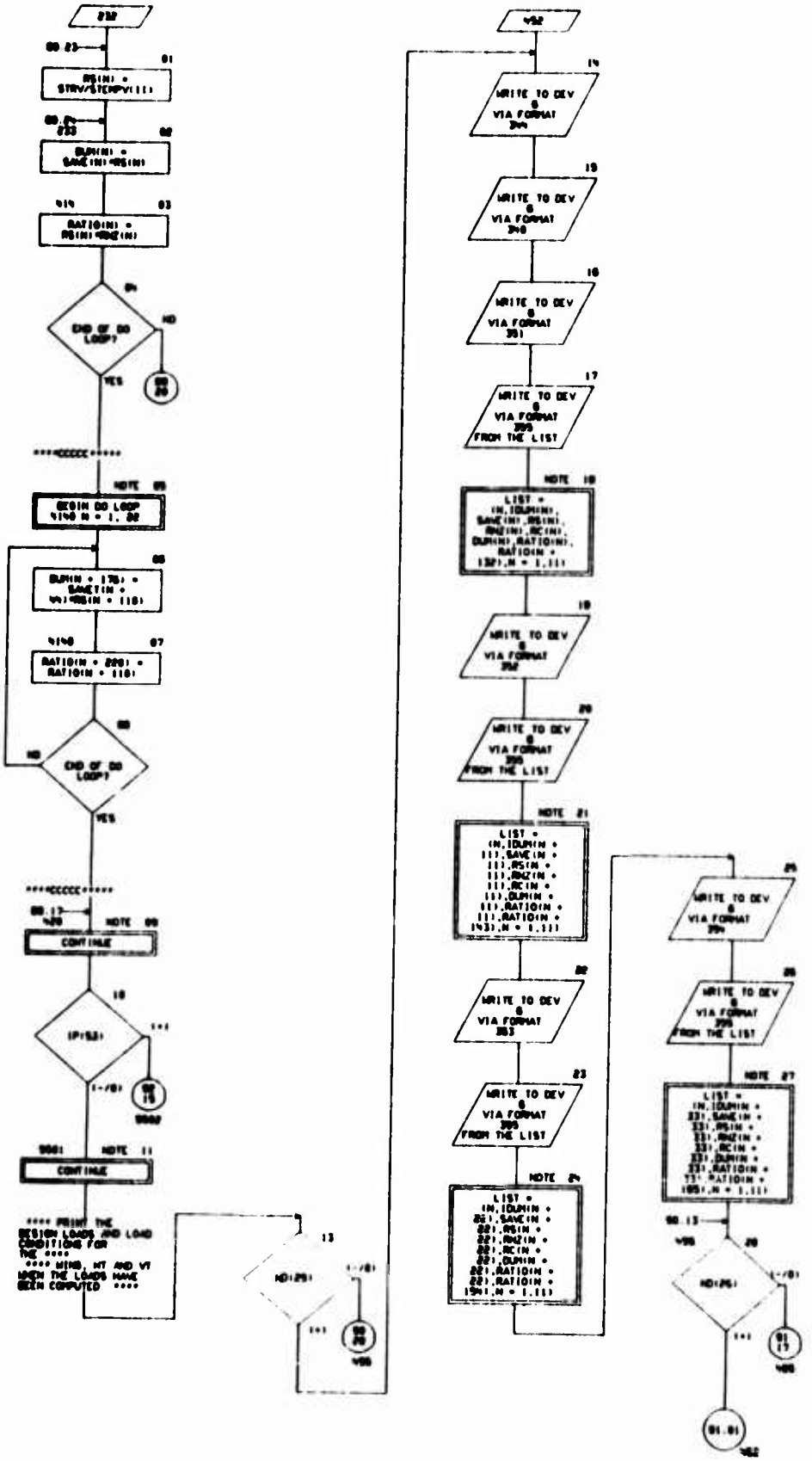

CHART TITLE - SUBROUTINE [illegible]

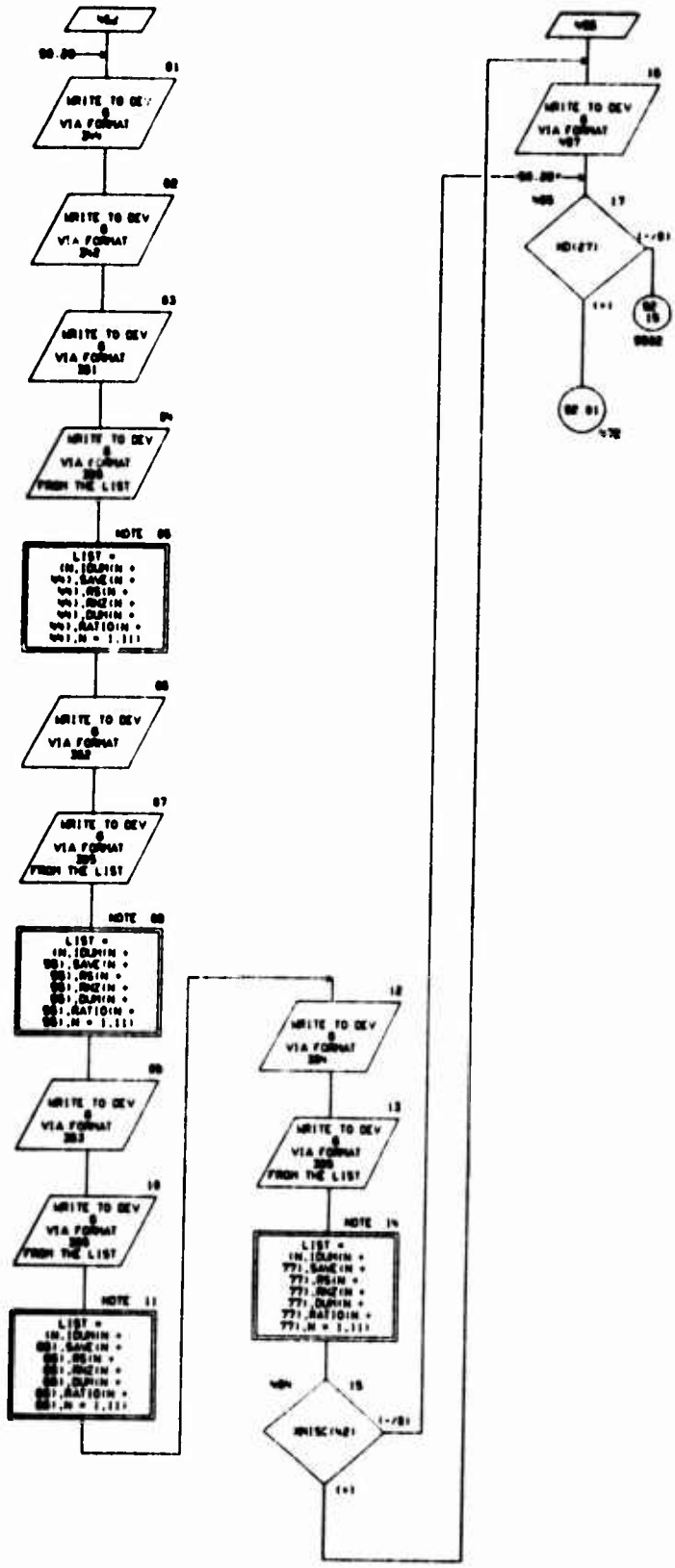

CHART TITLE - SUBROUTINE MAMET

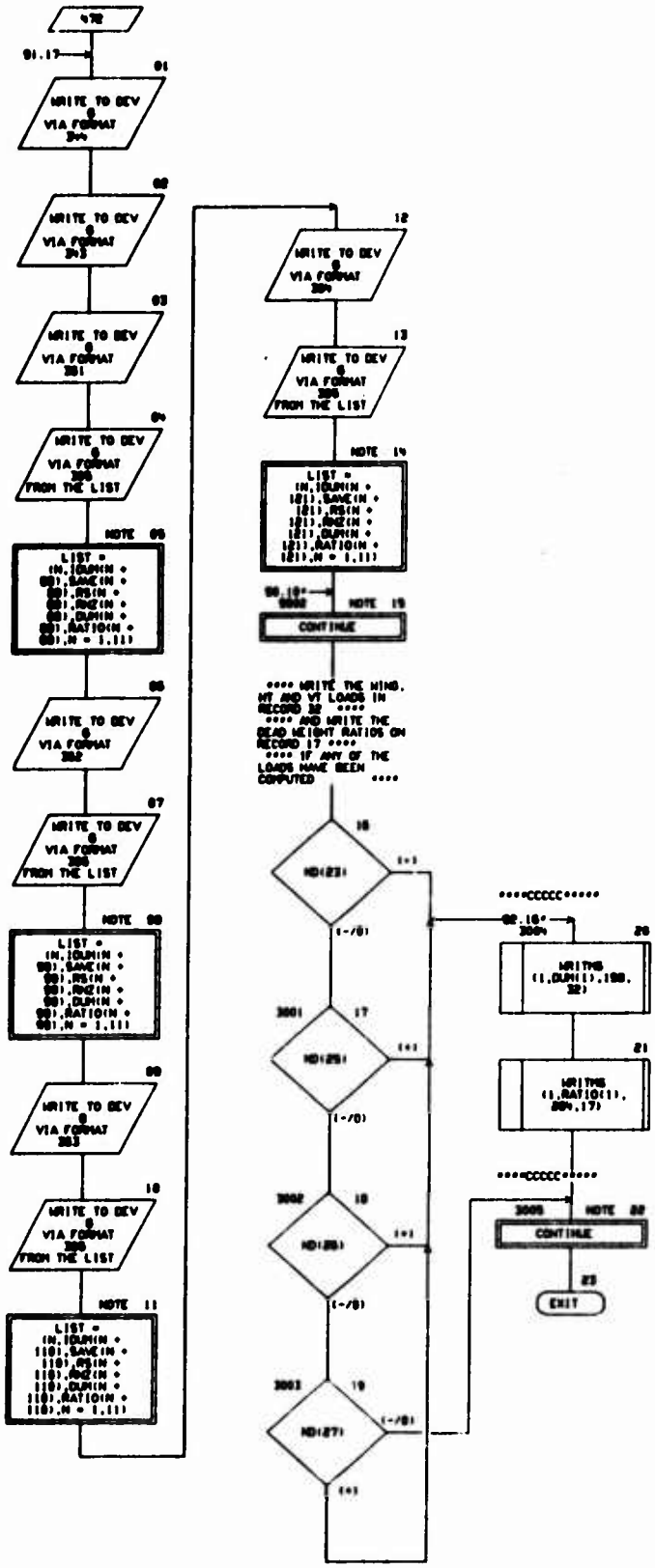

CHART TITLE - NON-PROCEDURAL STATEMENTS

```
      COMMON TCON(4460),ML0(300),IOUM(132),SAVE(132),MET(132),
       RNZ(132),RC(44),SVF(100),STEMPW(23),STEMPH(23),STEMPV(23),
       BUM(100),SAMET(66)
      COMMON /IPRINT/IP(80)
      COMMON /MISC/ MISC(100)
      DIMENSION          RATIO(204),RS(132)
      DIMENSION ND(200)
      DIMENSION TSKINF(23)
      EQUIVALENCE (ND(1),TCON(426))
      EQUIVALENCE (SVF(116),TSKINF(1)),(SVF(152),SBBM)
304   FORMAT(1H1,25X,55H*** DESIGN LOADS (RECORD 32) AND RATIOS (RECORD
      17) ***,6X,21H*** NAMMET - IP(53) **/)
340   FORMAT(40X,15H* * * W I N G * * *)
351   FORMAT(/52X,8HSTATION  LC        +V        RS     RNZ      RC
         RS*(+V)   RS*RNZ  RS*RNZ*RC/)
355   FORMAT(24X,I2,5X,I2,F13.0,F8.3,2F8.3,F13.0,F8.3,F8.3)
352   FORMAT(/52X,8HSTATION  LC        -V        RS     RNZ      RC
         RS*(-V)   RS*RNZ  RS*RNZ*RC/)
353   FORMAT(/52X,8HSTATION  LC        +BM       RS     RNZ      RC
         RS*(+BM)  RS*RNZ  RS*RNZ*RC/)
354   FORMAT(/52X,8HSTATION  LC        -BM       RS     RNZ      RC
         RS*(-BM)  RS*RNZ  RS*RNZ*RC/)
342   FORMAT(38X,23H*** HORIZONTAL TAIL ***)
351   FORMAT(/52X,6HSTATION  LC        +V        RS     RNZ      RS*(+
      V)   RS*RNZ/)
355   FORMAT(24X,I2,5X,I2,F13.0,F8.3,F8.3,F13.0,F8.3)
352   FORMAT(/52X,6HSTATION  LC        -V        RS     RNZ      RS*(-
      V)   RS*RNZ/)
353   FORMAT(/52X,6HSTATION  LC        +BM       RS     RNZ      RS*(+
      BM)  RS*RNZ/)
354   FORMAT(/52X,6HSTATION  LC        -BM       RS     RNZ      RS*(-
      BM)  RS*RNZ/)
407   FORMAT(/17X,73HTHE POSITIVE AND NEGATIVE LOADS ON THE HORIZONTAL T
      AIL HAVE BEEN REVERSED/14X,80HBECAUSE THE NEGATIVE BM AT THE ROOT
      HAS GREATER THAN THE POSITIVE BM AT THE ROOT)
343   FORMAT(38X,21H*** VERTICAL TAIL ***)
```

MODULE FORTRAN LISTING

FORTRAN MODULE (LIST,AUTOREO)

```
CARD NO      ****                          CONTENTS                          ****

  1              PROGRAM BLCNTL
  2        C
  3        C     PROGRAM BLCNTL IS LINK 4 OF SWEEP.                            BLCN0001
  4        C
  5        C     DETERMINES BASIC AIRLOAD CONDITIONS TO BE COMPUTED OR/AND WING  BLCN0002
  6        C     BENDING MOMENT FATIGUE SPECTRA                                BLCN0003
  7        C     PROVIDES LOGIC AND CONTROL FOR THE AIRLOAD SUBROUTINES        BLCN0004
  8        C
  9              COMMON TCOM(4400),MLD(300),IDUM(132),SAVE(132),XMET(132),
 10             * RMZ(132),RC(44),SVF(100),STEMPW(23),STEMPH(23),STEMPV(23),
 11             * DUM(100)
 12             *,SAMET(88)
 13        C*****CCCCC*****
 14        C
 15              COMMON /IPRINT/IP(100)
 16              COMMON /MISC/ IMISC(100)
 17        C
 18              DIMENSION ND(200),BD(620),BC(196),BB(20),DT(50),DD(883),DF(140),DPBLCN0010
 19             1(724)                                                         BLCN0011
 20        C
 21              DIMENSION PSI(23),TLOCAL(23),TTOTAL(23),QFLUX(23),TSKINR(23)
 22        C
 23              DIMENSION XMACH(23),ALT(23),TSKINF(23)
 24        C
 25              EQUIVALENCE (ND(1),TCOM(420)),(BD(1),TCOM(330)),(BC(1),TCOM(2700)BLCN0020
 26             1),(BB(1),TCOM(883)),(1,ND(101)),
 27             2    (IN,ND(105)),(NI,ND(106)),(NF,ND(108)),(DT(1),TCOM(109)),(DD(1
 28             3),TCOM(195)),(DF(1),TCOM(1000)),(DP(1),TCOM(1195))           BLCN0023
 29        C
 30              EQUIVALENCE (ALT(1),BD(201)),(XMACH(1),BD(224))
 31        C
 32              EQUIVALENCE (SVF(110),TSKINF(1))
 33              EQUIVALENCE          (SVF(  1),PSI   (1)),(SVF( 24),TLOCAL(1)),
 34             * (SVF( 47),TTOTAL(1)),(SVF( 70),QFLUX (1)),(SVF( 93),TSKINR(1))
 35        C
 36              REWIND 24
 37        C
 38        C*****CCCCC*****
 39              BUFFER IN(24,1)(TCOM(1),TCOM(5000))
 40        C*****CCCCC*****
 41        C
 42              IF(UNIT(24))1010,1010,1010
 43        C
 44        C     **** CLEAR ARRAYS ****
 45        C
 46         1010 DO 700 N=1,23
 47              XMACH (N) = 0.0
 48              ALT   (N) = 0.0
 49              STEMPW(N) = 0.0
 50              STEMPH(N) = 0.0
 51          700 STEMPV(N) = 0.0
 52        C
 53              DO 3 I=1,620                                                  BLCN0080
 54            3 BD(I)=0.0                                                     BLCN0085
 55        C
 56              DO 1 N=1,132
 57              IDUM(N) = 0
 58              RMZ(N) = 1.0
 59              SAVE(N) = 0.0
 60            1 XMET(N) = 0.0
 61        C
 62              DO 4 N=1,44
 63            4 RC(N) = 1.0
 64        C     **** READ RECORDS 1-4, LOADS PERMANENT DATA TABLES ****
 65              CALL READMS(1,DT(1),50,1)
 66              CALL READMS(1,DD(1),883,2)
 67              CALL READMS(1,DF(1),140,3)
 68              CALL READMS(1,DP(1),724,4)
 69        C
 70        C     *** SET UP ND(13-30), THE LOADS CONTROL INDICATORS ***
```

CARD NO **** CONTENTS ****

```
C
      ND(13) = XMISC(51)
      ND(14) = XMISC(52)
      ND(15) = XMISC(53)
      ND(16) = XMISC(54)
      DO 5 N=23,36
    5 ND(N) = XMISC(N+32)
C
      IF(ND(23))57,57,56
   56 ND(24) = 1
      ND(25) = 1
      ND(26) = 1
      ND(27) = 1
   57 CONTINUE
C
      ND(30) = XMISC(60)
C
C     **** READ RECORD 22, THE LOADS VARIABLE DATA ****
      CALL READMS(1,BC(1),195,22)
C
C     **** READ RECORD 31, THE STRESS, TEMPERATURE, VF AND G DATA ****
      CALL READMS(1,SVF(1),100,31)
C
C     **** READ RECORD 18, THE DEAD WEIGHT DATA (FROM DEATHG) ****
      CALL READMS(1,WLD(1),300,18)
C
      DO 15 N=14,300,11
      IF(ABS(WLD(N)) - 1.0)16,15,15
   16 WLD(N) = 0.0
   15 CONTINUE
C
      IF(ND(16))30,124,30                                          BLCN0222
   30 DO 21 I=100,131                                              BLCN0224
   21 ND(I)=0                                                      BLCN0226
C
      IN=0                                                         BLCN0228
   22 DO 67 I=1,9                                                  BLCN0230
      IF(ND(I+27))67,67,23                                         BLCN0235
   23 IF(IN)24,24,25                                               BLCN0240
   24 IN=1                                                         BLCN0245
   25 GO TO (26,35,38,40,41,52,61,64,65),I                         BLCN0250
   26 IF(ND(14))28,28,27                                           BLCN0255
   27 ND(113)=1                                                    BLCN0260
   28 ND(109)=1                                                    BLCN0265
      IF(BC(167)-BC(168))30,29,29                                  BLCN0270
   29 ND(110)=1                                                    BLCN0275
      GO TO 31                                                     BLCN0280
   30 ND(111)=1                                                    BLCN0285
   31 IF(BC(166) - 1.0) 67,33,33                                   BLCN0290
   33 ND(112)=1                                                    BLCN0300
      GO TO 67                                                     BLCN0305
   35 IF(ND(14))37,37,36                                           BLCN0320
   36 ND(115)=1                                                    BLCN0325
   37 ND(114)=1                                                    BLCN0330
      GO TO 67                                                     BLCN0345
   38 ND(116)=1                                                    BLCN0350
      GO TO 67                                                     BLCN0355
   40 ND(117)=1                                                    BLCN0360
      GO TO 67                                                     BLCN0365
   41 IF(ND(14))44,44,43                                           BLCN0375
   43 ND(120)=1                                                    BLCN0380
      ND(121)=1                                                    BLCN0400
   44 ND(118)=1                                                    BLCN0430
      ND(119)=1                                                    BLCN0460
      GO TO 67                                                     BLCN0480
   52 IF(ND(14))55,55,54                                           BLCN0500
   54 ND(124)=1                                                    BLCN0510
      ND(125)=1                                                    BLCN0520
   55 ND(122)=1                                                    BLCN0530
      ND(123)=1                                                    BLCN0540
      GO TO 67                                                     BLCN0550
```

```
CARD NO   ****                          CONTENTS                          ****

  142       61 ND(120)=1                                                    B.CH0000
  143          ND(127)=1                                                    B.CH0000
  144          GO TO 67                                                     B.CH0000
  145       64 ND(120)=1                                                    B.CH0000
  146          ND(120)=1                                                    B.CH0000
  147          GO TO 67                                                     B.CH0000
  148       65 ND(120)=1                                                    B.CH0000
  149          ND(131)=1                                                    B.CH0010
  150       67 CONTINUE                                                     B.CH0040
  151          IF(ND-60,60,70                                               B.CH0050
  152       60 DO 80 I=60,35                                                B.CH0060
  153       80 ND(I)=1                                                      B.CH0060
  154          GO TO 82                                                     B.CH0060
  155       70 ED(11)=0.0                                                   B.CH0070
  156          ED(13)=0.0                                                   B.CH0075
  157          ED(14)=ED(15)=0                                              B.CH0080
  158          NF=-1                                                        B.CH0085
  159          ED(16)=0.0                                                   B.CH0090
  160    C
  161          XM(SC(32)) = 0.0
  162          XM(SC(33)) = 0.0
  163    C
  164    C     **** BEGIN LOOP FOR 23 LOAD CONDITIONS ****
  165    C
  166          DO 123 I=1,23                                                B.CH0000
  167    C
  168          IF(ND(I+100))1123,1123,71
  169     1123 N = I
  170          TEX(NF(N)) = 0.0
  171          GO TO 123
  172    C
  173    C     **** COMPUTE THE ALTITUDE AND MACH NUMBER AT EACH CONDITION ****
  174    C     **** ALTITUDE IS ED(9)    MACH NUMBER IS ED(10)          ****
  175    C
  176       71 GO TO (72,73,74,75,76,77,78,79,80,77,80,78,88,77,80,78,88,77,80,78B.CH0700
  177         1,74,72,74),I                                                 B.CH0701
  178       72 ED(9)=SC(10)                                                 B.CH0705
  179          ED(10)=SC(105)                                               B.CH0710
  180          GO TO 87                                                     B.CH0715
  181       73 ED(9)=SC(20)                                                 B.CH0720
  182          ED(10)=SC(107)                                               B.CH0725
  183          GO TO 87                                                     B.CH0730
  184       74 ED(9)=SC(21)                                                 B.CH0735
  185          ED(10)=SC(108)                                               B.CH0740
  186          GO TO 87                                                     B.CH0745
  187       75 ED(9)=0.0                                                    B.CH0750
  188          ED(10)= 60                                                   B.CH0755
  189          GO TO 87                                                     B.CH0760
  190       76 ED(9)=SC(25)                                                 B.CH0765
  191          ED(10)=SC(28)                                                B.CH0770
  192          GO TO 88                                                     B.CH0775
  193       77 ED(9)=SC(19)                                                 B.CH0780
  194          ED(10)=SC(20)                                                B.CH0785
  195          GO TO 87                                                     B.CH0790
  196       78 ED(1)=SC(1)                                                  B.CH0795
  197          ED(6)=SC(16)                                                 B.CH0800
  198          ED(10)=1.5*SC(31)/ABS( 3                                     B.CH0805
  199          IF(ND(I))79,79,80                                            B.CH0810
  200       79 ED(2)=SC(3)                                                  B.CH0815
  201          GO TO 81                                                     B.CH0820
  202       80 ED(2)=SC(2)                                                  B.CH0825
  203       81 ED(3)=0.0                                                    B.CH0830
  204          ED(4)=0.0                                                    B.CH0835
  205          ED(5)=SC(103)                                                B.CH0840
  206          ED(7)=0.0                                                    B.CH0845
  207          ED(8)=0.0                                                    B.CH0850
  208          ED(9)=0.0                                                    B.CH0855
  209          IF(ND(I))82,82,83                                            B.CH0860
  210       82 ED(12)=1.0                                                   B.CH0865
  211          GO TO 100                                                    B.CH0870
  212       83 ED(12)=2.0                                                   B.CH0875
```

```
CARD NO   ****                    CONTENTS                    ****

 213          GO TO 100                                        BLCH0000
 214       04 DD(11)=DC(11)                                    BLCH0005
 215          DD(2)=DC(12)                                     BLCH0010
 216          DD(6)=1.0                                        BLCH0015
 217          DD(10)=1.2*DC(32)/DD(1.3                         BLCH0020
 218          GO TO 01                                         BLCH0025
 219       05 DD(9)=DC(20)                                     BLCH0030
 220          DD(10)=DC(23)                                    BLCH0035
 221          GO TO 07                                         BLCH0040
 222       06 DD(9)=DC(20)                                     BLCH0045
 223          DD(10)=DC(20)                                    BLCH0050
 224          GO TO 00                                         BLCH0055
 225       07 DD(2)=DC(6)                                      BLCH0060
 226          DD(3)=DC(8)                                      BLCH0065
 227          DD(4)=DC(10)                                     BLCH0070
 228          IF(ND(14))00,00,00                               BLCH0075
 229       08 DD(12)=1                                         BLCH0080
 230          GO TO 02                                         BLCH0085
 231       09 DD(12)=3                                         BLCH0090
 232          GO TO 02                                         BLCH0095
 233       10 DD(2)=DC(5)                                      BLCH0100
 234          DD(3)=DC(7)                                      BLCH0105
 235          DD(4)=DC(9)                                      BLCH0110
 236          DD(12)=2                                         BLCH0115
 237       02 DD(5)=0.0                                        BLCH0120
 238          DD(1)=DC(4)                                      BLCH0125
 239          IF(1.-6)93,00,00                                 BLCH0130
 240       03 IF(DD(10)-1.0)04,05,05                           BLCH0135
 241       04 DD(8)=DC(13)                                     BLCH0140
 242          GO TO 104                                        BLCH0145
 243       05 DD(8)=DC(14)                                     BLCH0150
 244          GO TO 104                                        BLCH0155
 245       06 IF(1.-7)07,07,00                                 BLCH0160
 246       07 DD(8)=DC(15)                                     BLCH0165
 247          GO TO 104                                        BLCH0170
 248       08 IF(1.-20)09,100,100                              BLCH0175
 249       09 DD(6)=1.0                                        BLCH0180
 250          GO TO 104                                        BLCH0185
 251      100 IF(1.-22)101,00,00                               BLCH0190
 252      101 IF(DD(10)-1.0)102,103,103                        BLCH0195
 253      102 DD(6)=.5*DC(13)                                  BLCH0200
 254          GO TO 104                                        BLCH0205
 255      103 DD(6)=.5*DC(14)                                  BLCH0210
 256      104 DD(7)=0.0                                        BLCH0215
 257          DD(8)=0.0                                        BLCH0220
 258          IF(1.-20)108,105,106                             BLCH0225
 259      105 DD(7)=DC(17)*.5                                  BLCH0230
 260          GO TO 108                                        BLCH0235
 261      106 IF(1.-22)105,107,107                             BLCH0240
 262      107 DD(8)=DC(18)                                     BLCH0245
 263      108 DD(5)=ND(13)*1000+1*10                           BLCH0250
 264          DD(1)=10.*(DD(5)+DD(12))+DD(4)                   BLCH0255
 265          DD(2)=DD(5)+DD(1)                                BLCH0260
 266          DD(22)=DD(2)+DD(12)                              BLCH0265
 267          DD(75)=DD(2)+DD(13)                              BLCH0270
 268          DD(120)=DD(2)+DD(14)                             BLCH0275
 269          IF(DD(10)-DD(10))111,113,111                     BLCH0280
 270      111 DD(6)=DD(10)                                     BLCH0285
 271          CALL USPAN                                       BLCH0290
 272      113 CONTINUE                                         BLCH0295
 273          GO TO (114,114,114,114,114,114,114,115,116,117,117,117,117,118,118BLCH0210
 274         1,118,118,119,119,120,120,121,121),I               BLCH0211
 275      114 NI=1                                             BLCH0215
 276          GO TO 122                                        BLCH0220
 277      115 NI=2                                             BLCH0225
 278          GO TO 122                                        BLCH0230
 279      116 NI=3                                             BLCH0235
 280          GO TO 122                                        BLCH0240
 281      117 NI=4                                             BLCH0245
 282          GO TO 122                                        BLCH0250
 283      118 NI=5                                             BLCH0255
```

```
CARD NO   ****                          CONTENTS                          ****

  [illegible]      GO TO 102                                                 GLCH200
  [illegible]  110 NH=6                                                      GLCH200
  [illegible]      GO TO 102                                                 GLCH200
  [illegible]  120 NH=7                                                      GLCH200
  [illegible]      GO TO 102                                                 GLCH200
  [illegible]  121 NH=8                                                      GLCH200
  [illegible] C
  [illegible] C   ****   COMPUTE THE LOADS FOR THIS CONDITION              ****
  [illegible] C   **** THE WING SHEAR IS STORED IN DO 32,33,40,   ,70       ****
  [illegible] C   **** THE WING BM   IS STORED IN DO 33,37,41,   ,75        ****
  [illegible] C   **** THE HT   SHEAR IS STORED IN DO 80,80,83,   ,105      ****
  [illegible] C   **** THE HT   BM   IS STORED IN DO 80,80,84,   ,105       ****
  [illegible] C   **** THE VT   SHEAR IS STORED IN DO 130,142,146,   ,170   ****
  [illegible] C   **** THE VT   BM   IS STORED IN DO 130,143,147,   ,170    ****
  [illegible] C
  [illegible]  122 CALL GLOAD                                                GLCH200
  [illegible]      CALL SPADM                                                GLCH200
  [illegible] C
  [illegible]      ALT(1) = DO(9)
  [illegible]      XMACH(1) = DO(10)
  [illegible] C
  [illegible] C
  [illegible] C       DETERMINE MAXIMUM KET BM AT 900 AND AT STATION 2
  [illegible] C       WHEN THE WING LOADS HAVE BEEN COMPUTED
  [illegible] C       STORE IN XHISC 32 AND 33
  [illegible] C       SAVE THE AIRLOAD BM, CONDITION INDICATOR, LOAD FACTOR
  [illegible] C       AND DEAD WEIGHT WDEWT
  [illegible] C
  [illegible]      IF(ND-50)14,14,403
  [illegible] C
  [illegible]  403 GO TO(6,6,6,6,7,6,7,6,6,6,6,7,7,6,6,7,7,6,6 6,6,6,6),I
  [illegible] C
  [illegible]    6 BMDM1 = XHISC(43)
  [illegible]      BMDM2 = XHISC(44)
  [illegible]      GO TO 10
  [illegible] C
  [illegible]    7 BMDM1 = XHISC(46)
  [illegible]      BMDM2 = XHISC(46)
  [illegible]      GO TO 10
  [illegible] C
  [illegible]    8 BMDM1 = XHISC(45)
  [illegible]      BMDM2 = XHISC(46)
  [illegible]      GO TO 10
  [illegible] C
  [illegible]    9 BMDM1 = XHISC(47)
  [illegible]      BMDM2 = XHISC(50)
  [illegible] C
  [illegible]   10 BMDET1 = DO(25) + BMDM1 + DO(10)
  [illegible]      BMDET2 = DO(60) + BMDM2 + DO(10)
  [illegible] C
  [illegible]      IF(XHISC(32) - ABS(BMDET1))11,12,12
  [illegible] C
  [illegible]   11 XHISC(32) = BMDET1
  [illegible]      BM1 = DO(25)
  [illegible]      IBM1 = I
  [illegible]      DWE1 = DO(10)
  [illegible]      BMDMT1 = BMDM1
  [illegible] C
  [illegible]   12 IF(XHISC(33) - ABS(BMDET2))13,14,14
  [illegible] C
  [illegible]   13 XHISC(33) = BMDET2
  [illegible]      BM2 = DO(60)
  [illegible]      IBM2 = I
  [illegible]      DWE2 = DO(10)
  [illegible]      BMDMT2 = BMDM2
  [illegible]   14 CONTINUE
  [illegible] C
  [illegible]      CALL HAILOS
  [illegible] C
  [illegible]      IF(ND-24)123,123,815
  [illegible] C
```

```
CARD NO    ****                    CONTENTS                    ****

      C     **** STORE THE FUSELAGE LOADS IN ARRAY FUS(644) ****
      C
        615 CALL FUSNET
      C
      C     **** END LOOP FOR 23 LOAD CONDITIONS ****
      C
        123 CONTINUE                                                  BLCN1305
      C
            I = 24
            IF(ND(24))632,632,634
      C
        634 CALL FUSNET
      C
        632 IF(ND(25))9534,9534,9533
      C
      C     * * * * CALL MAILDS FOR CONDITION 24 (26 TAXI LOADS) * * * *
      C
       9533 CALL MAILDS
      C
       9534 CALL WINNET
      C
            IW = 0
            IH = 0
            IV = 0
            TWING = 0.0
            TWT = 0.0
            TVT = 0.0
      C
            DO 133 I=1,23
      C
            IF(ND(I+100)) 1133,1133,133
      C
       1133 N = I
            PSI   (N) = 0.0
            TLOCAL(N) = 0.0
            TTOTAL(N) = 0.0
            SFLUX (N) = 0.0
            TSKINR(N) = 0.0
      C
        133 CONTINUE
      C
            IF(ND(25)) 405,405,402
        402 IW = IDUM(33)
            TWING = TSKINF(IW)
        405 IF(ND(26)) 410,410,407
        407 IH = IDUM(77)
            TWT = TSKINF(IH)
        410 IF(ND(27)) 420,420,412
        412 IV = IDUM(121)
            TVT = TSKINF(IV)
        420 CONTINUE
      C
            IF(IP(54))9503,9503,9506
       9503 CONTINUE
      C
      C     **** PRINT DATA FOR 23 LOAD CONDITIONS ****
      C
            WRITE(6,700)
        700 FORMAT(1H1,88X,21H** BLCNTL - IP(54) **//
           1          3X,14HLOAD CONDITION, 8X,8HALTITUDE,2X,4HMACH,
           *     4X,8HPRESSURE,1X,10HLOCAL TEMP,1X,10HTOTAL TEMP,2X,
           *    8HSUN FLUX,1X,8HSKIN TEMP,1X,8HSKIN TEMP,3X,8HSTRESS,
           *    4X,8HSTRESS,4X,8HSTRESS/    25X,4HFEET,3X,8HNUMBER,
           *                 5X,3HPSI,7X,5HDEG R,6X,5HDEG R,3X,10HBTU/HR/FT2,
           *     2X,5HDEG R,5X,5HDEG F, 6X,4HWING,3X,10HHORIZONTAL,
           *     1X,8HVERTICAL/)
      C
            WRITE(6,711)(ALT(N),XMACH(N),PSI(N),TLOCAL(N),TTOTAL(N),
           *       SFLUX(N),TSKINR(N),TSKINF(N),STEMPW(N),STEMPH(N),
           *       STEMPV(N),N=1,19)
      C
```

```
CARD NO      ****                          CONTENTS                                  ****

  425          711 FORMAT(
  427             * 20H  1 -HZ BALANCED      ,F8.0,F8.0,F10.2,2F11.1,3F10.1,3F10.0/
  428             * 20H  2 -HZ BALANCED      ,F8.0,F8.0,F10.2,2F11.1,3F10.1,3F10.0/
  429             * 20H  3 -HZ BALANCED      ,F8.0,F8.0,F10.2,2F11.1,3F10.1,3F10.0/
  430             * 20H  4 -HZ BALANCED      ,F8.0,F8.0,F10.2,2F11.1,3F10.1,3F10.0/
  431             * 20H  5 -HZ BALANCED      ,F8.0,F8.0,F10.2,2F11.1,3F10.1,3F10.0/
  432             * 20H  6 -HZ BALANCED      ,F8.0,F8.0,F10.2,2F11.1,3F10.1,3F10.0/
  433             * 20H  7 -HZ BALANCED      ,F8.0,F8.0,F10.2,2F11.1,3F10.1,3F10.0/
  434             * 20H  8 FLAP DOWN WHEWHER,F8.0,F8.0,F10.2,2F11.1,3F10.1,3F10.0/
  435             * 20H  9 FLAP DOWN 1 G TRIM,F8.0,F8.0,F10.2,2F11.1,3F10.1,3F10.0/
  436             * 20H 10 + VERTICAL GUST   ,F8.0,F8.0,F10.2,2F11.1,3F10.1,3F10.0/
  437             * 20H 11 + VERTICAL GUST   ,F8.0,F8.0,F10.2,2F11.1,3F10.1,3F10.0/
  438             * 20H 12 + VERTICAL GUST   ,F8.0,F8.0,F10.2,2F11.1,3F10.1,3F10.0/
  439             * 20H 13 + VERTICAL GUST   ,F8.0,F8.0,F10.2,2F11.1,3F10.1,3F10.0/
  440             * 20H 14 - VERTICAL GUST   ,F8.0,F8.0,F10.2,2F11.1,3F10.1,3F10.0/
  441             * 20H 15 - VERTICAL GUST   ,F8.0,F8.0,F10.2,2F11.1,3F10.1,3F10.0/
  442             * 20H 16 - VERTICAL GUST   ,F8.0,F8.0,F10.2,2F11.1,3F10.1,3F10.0/
  443             * 20H 17 - VERTICAL GUST   ,F8.0,F8.0,F10.2,2F11.1,3F10.1,3F10.0/
  444             * 20H 18 LATERAL GUST      ,F8.0,F8.0,F10.2,2F11.1,3F10.1,3F10.0/
  445             * 20H 19 LATERAL GUST      ,F8.0,F8.0,F10.2,2F11.1,3F10.1,3F10.0)
  446        C
  447             WRITE(6,712)(ALT(N),SMACH(N),PS(N),TLOCAL(N),TTOTAL(N),
  448             *       SFLUX(N),TSKIN(N),TSKIN2(N),STEMP(N),STEMP(N),
  449             *       STEMPV(N),N=20,23)
  450        C
  451          712 FORMAT(
  452             * 20H 20 PITCH ACCELERATION,F8.0,F8.0,F10.2,2F11.1,3F10.1,3F10.0/
  453             * 20H 21 PITCH ACCELERATION,F8.0,F8.0,F10.2,2F11.1,3F10.1,3F10.0/
  454             * 20H 22 YAW   ACCELERATION,F8.0,F8.0,F10.2,2F11.1,3F10.1,3F10.0/
  455             * 20H 23 YAW   ACCELERATION,F8.0,F8.0,F10.2,2F11.1,3F10.1,3F10.0)
  456        C
  457             WRITE(6,350)TWING,IW,TWT,IH,TVT,IV
  458          350 FORMAT(/// 50H,10HDESIGN TEMPERATURE,2X,9HCONDITION//30X,4HWING,
  459             *  12X,F8.1,1H%,12/30X,10HGRIDZONTAL,6X,F8.1,1H%,12/30X,8HVERTICAL,
  460             *  6X,F8.1,1H%,12)
  461        C
  462             IF(ND(25))9000,9000,9007
  463        C
  464         9007 WRITE(6,1250)BH   ,IBH,IN2,BMOMT   ,IBHSC(32),
  465             *            BHP   ,IBHP,IN22,BMOMT2   ,IBHSC(33)
  466         1250 FORMAT(//   30X,47H*** MAXIMUM NET BENDING MOMENTS FOR FATIGUE ***
  467             * //   3X,9HBH AT 50B,3X,9HCONDITION,3X,2HHZ,3X,13HINERTIA BH/HZ,
  468             * 3X,13HDEET BH AT 50B  /30X,F13.0,6X,I2,5X,F5.2,2X,F13.0,3X,F13.0//
  469             * 30X,19H    BH AT STA 2,3X,9HCONDITION,3X,2HHZ,3X,13HINERTIA BH/HZ
  470             *,2X,13HDEET BH AT STA 2/30X,F13.0,6X,I2,5X,F5.2,2X,F13.0,3X,F13.0)
  471        C
  472         9000 CONTINUE
  473        C
  474             IF(ND(16))125,124,124
  475        C
  476          124 CALL FATHS                                                    BLCH315
  477        C
  478          125 REWIND 24
  479        C
  480        C*****CCCCC*****
  481             BUFFER OUT (24,1)(TCOM(1),TCOM(5000))
  482        C*****CCCCC*****
  483        C
  484             IF(UNIT(24))1020,1020,1020
  485        C
  486         1020 CONTINUE
  487        C
  488             END                                                               BLCH330
  489        C
  490        C ((((((((((((((((((((((((((((((((((((((((((((((((((((((((((((((((((((((((((((((((
  491        C                        SUBROUTINE ATMOS
  492        C ))))))))))))))))))))))))))))))))))))))))))))))))))))))))))))))))))))))))))))))))
  493        C
  494             SUBROUTINE ATMOS (H,RHOH,PH,AHI                                  ATM00010
  495             PO=14.00000                                                      ATM00020
  496             RHOO=.0023700100                                                 ATM00030
```

CARD NO **** CONTENTS ****

```
      THD=510.000                                                       AIRLOADS
      GD=32.17*G                                                        AIRLOADS
      GD=1710.*G27                                                      AIRLOADS
      RE=0000031                                                        AIRLOADS
      IF(H-35152.)30,40,40                                              00000120
   30 GD=0.0                                                            00000130
      THD=510.000                                                       00000140
      THD=-.00700510                                                    00000150
      PDADE=10.00000                                                    00000155
      GO TO 100                                                         00000160
   40 IF(H-62304.)45,50,50                                              00000170
   45 GD=35000.0*                                                       00000180
      THD=300.000                                                       00000190
      PDADE=3.000*71                                                    00000195
      GO TO 110                                                         00000200
   50 IF(H-150304.)55,60,60                                             00000210
   55 GD=00021.                                                         00000220
      THD=300.000                                                       00000230
      THD=-.0010*002                                                    00000240
      PDADE=.2000*03                                                    00000245
      GO TO 100                                                         00000250
   60 IF(H-170304.)65,70,70                                             00000260
   65 GD=15*100.5                                                       00000270
      .THD=000.700                                                      00000280
      PDADE=.0174*04                                                    00000285
      GO TO 110                                                         00000290
   70 IF(H-2*0000.0)75,80,80                                            00000300
   75 GD=17000*.5                                                       00000310
      THD=000.700                                                       00000320
      THD=-.0021*0000                                                   00000330
      PDADE=.000*0001                                                   00000335
      GO TO 100                                                         00000340
   80 GD=2*0003.                                                        00000350
      THD=304.340                                                       00000360
      PDADE=.0003000300                                                 00000365
      GO TO 110                                                         00000370
  100 GD=RE*G/(RE+H)                                                    00000380
      THD=THD+THD*(GD-GD)                                               00000390
      VP=-(GD/(RD+THD))*(ALOG(THD/THD))                                 00000400
      PD=PDADE*EXP(VP)                                                  00000410
      AD=*0.0211*77*SQRT(THD)                                           00000420
      RHD=RHD*PD*THD/(PD*THD)                                           00000430
      GO TO 120                                                         00000440
  110 GD=RE*G/(RE+H)                                                    00000450
      THD=THD                                                           00000460
      VP=-GD*(GD-GD)/(RD*THD)                                           00000470
      PD=PDADE*EXP(VP)                                                  00000480
      AD=*0.0211*77*SQRT(THD)                                           00000490
      RHD=RHD*PD*THD/(PD*THD)                                           00000500
  120 RETURN
      END
C
C ************************************************************************
C                          SUBROUTINE BALDS
C ************************************************************************
C
      SUBROUTINE BALDS                                                  32000001
C     SUBROUTINE BALDS FOR LINK 5 OF SHEEP.                             32000002
C     COMPUTES COMPONENT TOTAL AIRLOADS AND CP'S. AND INERTIA FACTORS.  32000003
      COMMON TCOM(*00)                                                  32000004
      COMMON /IPRINT/IQ(80)
      DIMENSION BB(20),BD(160),BC(195),BS(20),BU(220),BC(*20),BF(140),ND32000005
     1(200)                                                             32000006
      EQUIVALENCE (BF(1),TCOM(1000)),(BD(1),TCOM(2903)),(BC(1),TCOM(2*0332000010
     1)),(BU(1),TCOM(3193)),(BS(1),TCOM(2973)),(BB(1),TCOM(330)),(BB(1)32000011
     2,TCOM(2003)),(ND(1),TCOM(*20)),(NI,ND(105)),(NT,ND(150)),(I,ND(152000012
     3)),(J,ND(152)),(K,ND(153)),(IP,ND(137))                           32000013
      CALL ATMOS(BB(9),BS(1),BS(2),BS(3))                               32000000
      BS(4)=.5*BS(1)*(BS(3)**2)*(BB(10)**2)                             32000000
      BS(5)=SQRT(200.0 * BS(4))                                         32000100
      BB(9)=BC(33)+BC(34)-BC(35)/(3.1416*(BC(36)**2))                   32000120
```

```
CARD NO   ****                    CONTENTS                    ****
  968       NT=0                                                 32000130
  969     3 NT=NT+1                                              32000140
  970       GO TO (4,5,6,10),NT                                  32000150
  971     4 I=0                                                  32000160
  972       J=4                                                  32000170
  973       GO TO 8                                              32000180
  974     5 I=10                                                 32000190
  975       J=5                                                  32000200
  976     6 IF(IP)6,7,8                                          32000210
  977     7 K=71                                                 32000220
  978       GO TO 11                                             32000230
  979     8 K=40                                                 32000240
  980       GO TO 11                                             32000250
  981     9 I=13                                                 32000260
  982       J=111                                                32000270
  983       K=107                                                32000280
  984       GO TO 11                                             32000290
  985    10 I=17                                                 32000300
  986       J=170                                                32000310
  987       K=130                                                32000320
  988    11 DS(I)=DC(K)+DU(J)                                    32000330
  989       IF(NT-3)3,3,12                                       32000340
  990    12 IF(DS(9))13,14,13                                    32000350
  991    13 K = 40                                               32000360
  992       IF(IP) 81,80,81                                      32000370
  993    80 K = 71                                               32000380
  994    81 DS(8) = DC(K) + DU(64)                               32000390
  995       DS(7) = DC(K) + DU(65)                               32000400
  996       GO TO 15                                             32000410
  997    14 DS(8)=0.0                                            32000420
  998       DS(7)=0.0                                            32000430
  999    15 IF(IP)17,16,17                                       32000440
 1000    16 I=70                                                 32000450
 1001       GO TO 18                                             32000460
 1002    17 I=44                                                 32000470
 1003    18 DS(13)=0.0                                           32000480
 1004       DS(10)=DS(8)                                         32000490
 1005       GO TO (19,20,20,19,19,19,21,19),NT                   32000500
 1006    19 DS(8)=1.1*DS(1)*DS(10)/(DS(4)*DC(1))                 32000510
 1007       GO TO 22                                             32000520
 1008    20 DS(8)=CSIN(DC(102),DT(1),DT(1),5, 5)*DU(1)*DU(8)*DS(5)/57.3  32000530
 1009       DS(8)=-DS(8)*1.1*DS(1)*DS(10)/(DS(4)*DC(1))          32000540
 1010       GO TO 22                                             32000550
 1011    21 DS(13)= (DS(7)*DS(3)*12.0)/(DU(111)*DC(107)-DS(2))   32000560
 1012       DS(10)=DS(10)-DS(13)/DS(1)                           32000570
 1013       GO TO 19                                             32000580
 1014    22 DS(11)=DS(8)/DU(1)                                   32000590
 1015       DS(1)= 0.25332*DS(11)*DS(4)*(DC(35)**2)              32000600
 1016       DS(2)=DU(2)*DS(8)*DS(4)*DC(1)                        32000610
 1017       DS(3)=DS(2)*(1.0-DU(2))/DU(2)                        32000620
 1018       DS(4)=((DS(2)-DS(5))*DS(1)-(DS(10)-DS(2))*DS(3)-(DS(8)-DS(2))*DS(2)32000630
 1019      1)/(DS(13)-DS(2))                                     32000640
 1020       DS(5)=0.0                                            32000650
 1021       DS(6)=0.0                                            32000660
 1022       IF(DS(5))23,24,23                                    32000670
 1023    23 DS(5)=DU(62)*DS(9)*DS(4)*DC(1)                       32000680
 1024       DS(6)=DS(5)*(1.0-DU(62))/DU(62)                      32000690
 1025       DS(4)=DS(4)-((DS(6)-DS(2))*DS(5)+(DS(7)-DS(2))*DS(6))/(DS(13)-DS(2)32000700
 1026      1)                                                    32000710
 1027    24 DS(12)=DS(1)+DS(2)+DS(3)+DS(4)+DS(5)+DS(6)           32000720
 1028       IF(DS(12)) 93,92,93                                  32000730
 1029    92 DS(16) = 1.0                                         32000740
 1030       GO TO 94                                             32000750
 1031    93 DS(16) = DS(1)*DS(10)/DS(12)                         32000760
 1032    94 DU(206) = DS(2)*DS(16)                               32000770
 1033       DU(207) = DS(5)*DS(16)                               32000780
 1034       DU(208) = DS(13) + DS(4)*DS(10)                      32000790
 1035       DS(3)=DS(1)*DS(10)*DS(12)                            32000800
 1036       DS(5)=.5*(DU(206)+DU(207))                           32000810
 1037       DS(9) = (DS(3) + DS(5))*DS(16)                       32000820
 1038       DS(11) = 0.5*(DS(13) + DS(4)*DS(16))                 32000830
```

```
CARD NO   ****                          CONTENTS                          ****

  630         IF(BD(6)) 95,95,95                                            32000760
  640      95 BD(7) = BU(3)                                                 32000770
  641         GO TO 97                                                      32000775
  642      96 BD(7) = (BU(3)+BU(205) + BU(63)*BU(227))/(2.0*BD(6))          32000780
  643      97 IF(BD(9)) 50,50,50                                            32000785
  644      98 BD(10) = (BD(10)*BD(3) + BS(7)*BD(6))*BS(15)/BD(9)            32000790
  645      99 BD(12) = BU(110)                                              32000800
  646         BU(200)=2.0*BU(100)*BD(11)                                    32000810
  647         BD(14)=ABS(.30*BD(11)*BD(12))                                 32000820
  648         BD(15)=0.0                                                    32000825
  649         BD(16)=0.0                                                    32000830
  650         DO 25 J=18,21                                                 32000835
  651      25 BD(J)=0.0                                                     32000840
  652         BD(4)=0.0                                                     32000843
  653         GO TO (88,88,88,27,27,24,35,35),NI                            32000850
  654      88 BD(10)=BD(6)                                                  32000860
  655         GO TO 37                                                      32000870
  656      27 IF(IP)20,20,20                                                32000880
  657      20 J=78                                                          32000890
  658         GO TO 30                                                      32000900
  659      30 J=46                                                          32000910
  660      30 BS(14)=BD(11)*(BC(J)/(10.1*BS(1)*BU(1)*(BC(1)**2)))           32000920
  661         IF(BD(10)-1.0)31,32,32                                        32000930
  662      31 BS(15)=.88*BS(14)/(5.3+BS(14))                                32000940
  663         GO TO 33                                                      32000950
  664      32 BS(15)=(BS(14)**1.03)/(6.88+(BS(14)**1.03))                   32000960
  665      33 BD(7)=BS(15)*(BC(35)**2)/800.37535                            32000970
  666         BD(8)=.10030*BS(15)*BU(1)*BU(2)*BC(1)*BS(5)                   32000980
  667         BD(9)=BD(8)*(1.0-BU(21)/BU(2))                                32000990
  668         BD(10)=.10030*BS(15)*BU(100)*BC(111)*BS(5)                    32001000
  669         IF(NI-5)40,1,40                                               32001002
  670       1 DO 2 J=7,10                                                   32001004
  671       2 BD(J)=BD(J)                                                   32001006
  672      40 BD(16)=1.0+(BD(7)+BD(8)+BD(9)+BD(10))/BD(1)                   32001010
  673         BD(20)=((BD(2)-BD(5))*BD(7)-(BD(8)-BD(2))*BD(8)-(BD(10)-BD(2))*BD(32001020
  674        10)-(BD(13)-BD(2))*BD(10))/(BD(3)*12.0)                        32001030
  675         BD(3)=BD(3)+BD(7)                                             32001040
  676         BD(6)=BD(6)+.5*BD(8)                                          32001050
  677         BD(9)=BD(9)+BD(9)                                             32001060
  678         BD(11)=BD(11)+.5*BD(10)                                       32001070
  679         BD(14)=BD(14)+ABS(.15*BD(10)*BD(12))                          32001080
  680         BU(200)=BU(200)+BD(8)                                         32001090
  681         BU(200)=BU(200)+BD(10)*BU(100)                                32001100
  682         GO TO 37                                                      32001110
  683      34 BD(14)=.00+3700*BS(5)*(BC(35)**2)                             32001120
  684         BD(15)=.10030*BU(167)*BC(143)*BS(5)                           32001130
  685         IF(BD(15))51,50,51                                            32001133
  686      50 BD(15)=2.0*BD(15)                                             32001135
  687      51 BD(16) = BU(100) + BC(150)                                    1140
  688         BD(19)=(BD(14)+BD(15))/BD(1)                                  32001150
  689         BD(21)=((BD(2)-BD(5))*BD(4)-(BD(17)-BD(2))*BD(15))/(BD(4)*12.0) 32001160
  690         GO TO 55                                                      32001170
  691      35 BD(20)=BD(7)                                                  32001180
  692         GO TO 55                                                      32001190
  693      36 BD(15)=-(BD(8)*BD(4))/((BD(17)-BD(2))/12.0)                   32001210
  694         BD(16) = BU(100) + BC(150)                                    1320
  695         BD(19)=BD(15)/BD(1)                                           32001230
  696         BD(21)=BD(8)                                                  32001240
  697         GO TO 55                                                      32001250
  698      37 IF(10(50))9501,9501,9502
  699    9501 CONTINUE
  700         IF(ND(23))47,47,48
  701      47 IF(ND(24))48,48,48                                            32001253
  702      48 WRITE(6,49)BD(1),BD(18),BD(9),BD(5)                           32001254
  703      49 FORMAT(1H1,6X,13HCONDITION NO=,F7.0,5X,3HW=,F8.3,5X,4HALT=,F7.0,
  704       1   5X,3HV=,F8.2,19X,20H** BALDS - IP(50) **/)
  705         WRITE(6,30)BD(3),BD(4),BD(5)                                  32001260
  706      30 FORMAT(1H0,6X,18HBODY LOADS/7X,4HPZN=,F8.0,4X,4HPYN=,F7.0,4X,  32001270
  707       1 4HBBN=,F8.2/)                                                 32001271
  708         WRITE(6,30)BD(6),BD(7),BD(8)                                  32001280
  709      30 FORMAT(1H0,6X,19HWING PANEL LOAD/7X,8HPZW(B)/S=,F8.0,4X,7HYBW(B)=,32001290
```

```
      1 F7.2,4X,THETA(I)=,F8.2/)                                        32001300
      WRITE(6,40)BD(9),BD(10)                                           32001310
   40 FORMAT(1H0,6X,20HHHD CARRY-OVER LOAD/7X,THPZD(N)=,F8.0,4X,        32001320
      1 THBD(N)=,F8.2/)                                                 32001330
      WRITE(6,41)BD(11),BD(12),BD(13),BD(14)                            32001340
   41 FORMAT(1H0,6X,21HHORIZONTAL TAIL LOADS/7X,BHPZH/2=,F8.0,4X,4HYB=,32001350
      1 F8.2,4X,4HBH=,F8.2,4X,3HDH=,F8.0/)                              32001360
      WRITE(6,42)BD(15),BD(16),BD(17)                                   32001370
   42 FORMAT(1H0,6X,18HVERTICAL TAIL  BAD/7X,4HPYV=,F8.0,4X,4HBV=,F8.2,32001380
      1 4X,4HDV=,F8.2/)                                                 32001390
      WRITE(6,43)BD(18),BD(19),BD(20),BD(21)                            32001400
   43 FORMAT(1H0,6X,24HAIRPLANE INERTIA FACTORS/7X,3HIX=,F8.2,4X,3HIY=, 32001410
      1 F8.2,4X,3HIZ=,F7.3,4X,3HIXZ=,F7.3/)                             32001420
      WRITE(6,44)BU(288),BU(287),BU(289)                                32001430
   44 FORMAT(1H0,6X,28HCOMPONENT SPANWISE FACTORS/7X,BHPZH(N)=,F8.0,4X,32001440
      1 BHPZH(N)=,F8.0,4X,THPZH(N)=,F8.0)                               32001441
 9999 CONTINUE
   40 RETURN                                                            32001460
      END                                                               32001470
C
C ((((((((((((((((((((((((((((((((((((((((((((((((((((((((((((((((((((((((((((((
C                          FUNCTION CODIM2
C )))))))))))))))))))))))))))))))))))))))))))))))))))))))))))))))))))))))))))))
C
      FUNCTION CODIM2(X,XI,YI,N,NX)                                     CODI0010
      COMMON TCOM(4400)                                                 CODI0015
      DIMENSION ND(2000),XI(1),YI(1)                                    CODI0020
      EQUIVALENCE (ND(1),TCOM(420)),(NI,ND(193)),(J,ND(194)),(JJ,ND(195)CODI0025
     1),(K,ND(196)),(L,ND(197)),(M,ND(198))                             CODI0025
      M = X                                                             CODI0027
      NI = N                                                            CODI0030
      IF ( NI-2 ) 105,110,190                                           CODI0035
  105 CODIM2 = YI(NI)                                                   CODI0035
      GO TO 999                                                         CODI0040
  110 NI = 2                                                            CODI0045
  140 CODIM2 = (YI(NI)-YI(NI-1))/(XI(NI)-XI(NI-1)) * (M-XI(NI-1)) +     CODI0050
     1 YI(NI-1)                                                         CODI0055
      GO TO 999                                                         CODI0060
  190 IF ( XI(1) - XI(NI))105,105,175                                   CODI0065
  105 DO 170 I = 1,NI                                                   CODI0070
      J = I                                                             CODI0072
      IF ( M - XI(J)) 100,220,170                                       CODI0075
  170 CONTINUE                                                          CODI0080
      GO TO 105                                                         CODI0085
  175 DO 100 I = 1,NI                                                   CODI0090
      J = I                                                             CODI0092
      IF ( XI(J) - M ) 100,220,100                                      CODI0095
  100 CONTINUE                                                          CODI0100
  105 NI = N                                                            CODI0105
      GO TO 140                                                         CODI0110
  190 IF ( J - 2 ) 110,210,200                                          CODI0115
  210 J = 3                                                             CODI0120
      JJ = 1                                                            CODI0125
      GO TO 205                                                         CODI0130
  220 CODIM2 = YI(J)                                                    CODI0135
      GO TO 999                                                         CODI0140
  200 IF ( J - NI ) 200,205,105                                         CODI0145
  205 J = NI-1                                                          CODI0150
      JJ = 2                                                            CODI0155
      GO TO 205                                                         CODI0160
  200 JJ = 3                                                            CODI0165
  205 IF(NI-3)200,200,205                                               CODI0170
  200 J = 3                                                             CODI0175
  205 K = J-1                                                           CODI0180
      M = K-1                                                           CODI0185
      L = J+1                                                           CODI0190
      XIM = XI(M)                                                       CODI0195
      XIK = XI(K)                                                       CODI0200
      XIJ = XI(J)                                                       CODI0205
      A1 = M-XIM                                                        CODI0210
      A2 = M-XIK                                                        CODI0215
```

CARD NO **** CONTENTS ****

```
      A3 = M-XIJ                                                        CODI0000
      AL = (M-XIK)/(XIJ-XIK)                                            CODI0005
      C1 = A3*A2/((XIM-XIK)*(XIM-XIJ))                                  CODI0010
      C2 = A1*A3/((XIK-XIM)*(XIK-XIJ))                                  CODI0015
      C3 = A2*A1/((XIJ-XIM)*(XIJ-XIK))                                  CODI0020
      P1= C1*Y1(M)+C2*Y1(K)+C3*Y1(J)                                    CODI0025
      IF(NI-3)300,300,310                                               CODI0030
  300 P2 = P1                                                           CODI0035
      GO TO 310                                                         CODI0040
  310 XIL = X1(L)                                                       CODI0045
      AM = M-XIL                                                        CODI0050
      C4 = AM*A3/((XIK-XIJ)*(XIK-XIL))                                  CODI0055
      C5 = A2*AM/((XIJ-XIK)*(XIJ-XIL))                                  CODI0060
      C6 = A3*A2/((XIL-XIK)*(XIL-XIJ))                                  CODI0065
      S = AL * Y1(J) + (1. - AL) * Y1(K)                                CODI0070
      P2= C4*Y1(K)+C5*Y1(J)+C6*Y1(L)                                    CODI0075
  315 GO TO (320,330,350),JJ                                            CODI0080
  320 P2 = P1                                                           CODI0085
      AL = (M-X1(1))/(X1(2)-X1(1))                                      CODI0090
      S  = AL*Y1(2)+ (1.0-AL)*Y1(1)                                     CODI0095
      P1 = S + XK*(P2-S)                                                CODI0100
      GO TO 350                                                         CODI0105
  330 P1 = P2                                                           CODI0110
      AL = (M-X1(NI-1))/(X1(NI)-X1(NI-1))                               CODI0115
      S = AL*Y1(NI) + (1.0-AL)*Y1(NI-1)                                 CODI0120
      P2 = S + XK*(P1-S)                                                CODI0125
  350 E1 =   ABS( P1 - S )                                              CODI0130
      E2 =  ABS(P2-S)                                                   CODI0135
      IF(E1<E2)400,400,410                                              CODI0140
  400 CODINP = S                                                        CODI0145
      GO TO 600                                                         CODI0150
  410 BT = (E1*AL)/(E1*AL+(1.-AL)*E2)                                   CODI0155
      CODINP = BT*P2 + (1.-BT)*P1                                       CODI0160
  600 RETURN                                                            CODI0165
      END                                                               CODI0170
C
C ((((((((((((((((((((((((((((((((((((((((((((((((((((((((((((((((((((((((((((((((((((((((((((((((((((((((((((((((((((((((((((((((((((
C                          SUBROUTINE FATHS
C ))))))))))))))))))))))))))))))))))))))))))))))))))))))))))))))))))))))))))))))))))))))))))))))))))))))))))))))))))))))))))))))))))))))))
C
      SUBROUTINE FATHS                                                  FATHS001
C     SUBROUTINE FATHS FOR LINK 5 OF SWEEP                              FATHS002
C     CALCULATES MANEUVER+GUST AND TAXI BENDING MOMENT SPECTRA AT A WINDFATHS003
C      BODY SIDE STATION (NORMAL) AND AT ONE SWEPT SPAN STATION         FATHS004
      COMMON TCOM(4400)                                                 FATHS010
      COMMON /IPRINT/IQ(100)
      DIMENSION DS(200),DE(340),DI(60),DG(72),DR(100),ND(200),BC(195),BSFATHS020
     1(20),BD(160),BU(220),BO(620),BB(20),BWAN(220)                     FATHS021
      DIMENSION DUMMY(830)                                              FATHS023
      EQUIVALENCE (DS(1),TCOM(1000)),(DE(1),TCOM(2177)),(DI(1),TCOM(2517FATHS030
     1),(DG(1),TCOM(2577)),(DR(1),TCOM(2649)),(ND(1),TCOM(4201)),(BC(1)FATHS031
     2,TCOM(2750)),(BB(1),TCOM(2953)),(BS(1),TCOM(2973)),(BD(1),TCOM(2987FATHS032
     3)),(BU(1),TCOM(3193)),(BO(1),TCOM(3381)),(NA,ND(13)),(NF,ND(100))FATHS033
     4,(NS,ND(150)),(ND,ND(151)),(NN,ND(152)),(NY,ND(153)),(I,ND(154)),(FATHS034
     5J,ND(155)),(K,ND(156)),(L,ND(157)),(M,ND(158))                    FATHS035
      CALL READMS(1,DS(1),200,5)
      CALL READMS(1,DE(1),340,6)
      CALL READMS(1,DI(1),60,7)
      CALL READMS(1,DG(1),72,8)
      CALL READMS(1,DR(1),100,9)
      DO 2 I=1,220                                                      FATHS073
    2 BWAN(I) = 0.0                                                     FATHS074
    4 I=0                                                               FATHS075
      GO TO (10,5,6,7,8,9),NA                                           FATHS080
    5 I=40                                                              FATHS085
      GO TO 10                                                          FATHS090
    6 I=85                                                              FATHS095
      GO TO 10                                                          FATHS100
    7 I=144                                                             FATHS105
      GO TO 10                                                          FATHS110
    8 I=192                                                             FATHS115
```

CARD NO **** CONTENTS ****

```
      GO TO 10                                                          FATH0120
    9 I=240                                                             FATH0125
   10 DO 11 J=1,40                                                      FATH0130
      K=J+I                                                             FATH0135
   11 BD(J+112)=DS(K)                                                   FATH0140
      DO 12 I=560,567                                                   FATH0145
      BD(I)=BC(187)*BD(I-415)                                           FATH0150
   12 BD(I+8)=BC(188)*BD(I-407)                                         FATH0155
      I=0                                                               FATH0160
      GO TO (17,17,13,14,15,16),NA                                      FATH0165
   13 I=100                                                             FATH0170
      GO TO 17                                                          FATH0175
   14 I=140                                                             FATH0180
      GO TO 17                                                          FATH0185
   15 I=320                                                             FATH0190
      GO TO 17                                                          FATH0195
   16 I=360                                                             FATH0200
   17 DO 20 J=1,20                                                      FATH0205
      K=J+I                                                             FATH0210
      BD(J+576)=DC(K)                                                   FATH0212
      IF(J-10)18,18,19                                                  FATH0214
   18 BD(J+585)=DC(K)-1.0                                               FATH0216
      GO TO 20                                                          FATH0218
   19 BD(J+585)=-DC(K)+1.0                                              FATH0220
   20 CONTINUE                                                          FATH0222
      NS=0                                                              FATH0224
      NF=1                                                              FATH0226
      NB=1                                                              FATH0230
      NH=2                                                              FATH0235
      DO 24 I=1,8                                                       FATH0240
      NS=NS+1                                                           FATH0245
      BD(1)=BD(I+560)                                                   FATH0250
      BD(9)=BD(I+120)                                                   FATH0255
      BD(10)=BD(I+120)                                                  FATH0260
      BD(12)=BD(I+120)                                                  FATH0270
      IF(BD(12)-2.0)22,21,22                                            FATH0273
   21 J=77                                                              FATH0275
      K=101                                                             FATH0280
      GO TO 23                                                          FATH0285
   22 J=40                                                              FATH0290
      K=175                                                             FATH0295
   23 IF(NS-2)24,28,28                                                  FATH0300
   24 CALL UBPAN                                                        FATH0305
      DS(1)=BC(171)/DS(12)                                              FATH0310
      DS(3)=BU(7)                                                       FATH0315
      DS(4)=COSINE(DS(1),BU(9),BU(35),13, 5)                            FATH0320
      IF(NS - 2)25,27,27                                                FATH0330
   25 BD(19)=DS(3)                                                      FATH0335
      BD(20)=DS(4)                                                      FATH0352
   27 DS(5)=COSINE(BD(I+144),BC(172),BC(K),3,.5)                        FATH0354
      DS(6)=COSINE(BD(I+144),BC(172),BC(K+3),3,.5)                      FATH0356
      GO TO 31                                                          FATH0365
   28 IF(BD(18)-BD(I+119))29,29,29                                      FATH0370
   29 IF(BD(I+135)-BD(I+135))29,30,29                                   FATH0375
   30 IF(BD(1)-BD(I+960))27,31,27                                       FATH0380
   31 NY=BD(I+112)                                                      FATH0385
      GO TO (32,32,35,37,40,42),NA                                      FATH0390
   32 K=20                                                              FATH0395
      GO TO (44,33,34,35),NY                                            FATH0400
   33 K=40                                                              FATH0405
      GO TO 44                                                          FATH0410
   34 K=60                                                              FATH0415
      GO TO 44                                                          FATH0420
   35 K=80                                                              FATH0425
      GO TO 44                                                          FATH0430
   36 K=120                                                             FATH0435
      GO TO 44                                                          FATH0440
   37 K=160                                                             FATH0445
      IF(NY-2)44,38,39                                                  FATH0450
   38 K=180                                                             FATH0455
      GO TO 44                                                          FATH0460
                                                                        FATH0465
                                                                        FATH0470
```

```
CARD NO    ****                                   CONTENTS                                   ****
  023        30 K=300                                                                        FATH0470
  024           GO TO 44                                                                     FATH0480
  025        40 K=240                                                                        FATH0490
  026           IF(NV-1)44,44,41                                                             FATH0500
  027        41 K=300                                                                        FATH0510
  028           GO TO 44                                                                     FATH0520
  029        42 K=300                                                                        FATH0530
  030           IF(NV-1)44,44,43                                                             FATH0540
  031        43 K=300                                                                        FATH0550
  032        44 DO 46 L=1,10                                                                 FATH0560
  033           KK=L+K                                                                       FATH0570
  034           BD(L)=BC(KK)*BD(1)*BD7/1000.0                                                FATH0580
  035        46 BD(L+10)=BC(KK+10)*BD(1)*BD7/1000.0                                          FATH0590
  036           CALL ATMOS (BD(9),BS(7),BS(8),BS(9))                                         FATH0600
  037           BS(8)=BD(10)*BS(8)                                                           FATH0610
  038           BS(10)=BD(1)*BC(J-1)/(10.1*BS(7)*BU(1))*(BC(J-2)*2)                          FATH0620
  039           DO 48 K=1,6                                                                  FATH0630
  040           L=12*K+1                                                                     FATH0640
  041        48 BS(K+10)=CODIM2(BD(9),BD(1),BD(L),12,.5)                                     FATH0650
  042           BS(18)=BC(J-2)/(BC(J-1)*BS(15))                                              FATH0660
  043           BS(17)=FCODM2(BS(10),BS(16),BR(1),BR(11),BR(20),9,10,.5)                     FATH0670
  044           BS(18)=BS(17)*BS(8)*BU(1)*BS(17)*BC(J-2)/(2.0*BD(1))                         FATH0680
  045           BS(19)=7.5*BS(8)/5000.0                                                      FATH0690
  046           BD(43)=BS(5)+BS(3)*BD(1)/2.0                                                 FATH0700
  047           BD(44)=BS(6)+BS(4)*BD(1)/2.0                                                 FATH0710
  048           BVAN(1+200) = BD(43)                                                         FATH0720
  049           BVAN(1+210) = BD(44)                                                         FATH0730
  050           BD(10)=45                                                                    FATH0740
  051           DO 53 K=1,20                                                                 FATH0750
  052           BD(41)=-BD(K+200)/(BS(10)+BS(12))                                            FATH0760
  053           BD(42)=BD(41)*BS(12)/BS(14)                                                  FATH0770
  054           IF(BD(41)+101.10)47,47,48                                                    FATH0780
  055        47 BD(41)=-101.10                                                               FATH0790
  056        48 IF(BD(42)+101.10)49,49,50                                                    FATH0800
  057        49 BD(42)=-101.10                                                               FATH0810
  058        50 BS(20)=(BS(11)*EXP(BD(41))+BS(13)*EXP(BD(42)))*BS(19)*BD(1)*BD7*3FATH0820
               100.0                                                                         FATH0830
  059           BD(100)=BD(43)*BD(K+575)                                                     FATH0840
  060           BD(101)=BD(44)*BD(K+575)                                                     FATH0850
  061           L = (I-1)*20 + K                                                             FATH0860
  062           BD(100+L) = BS(20)                                                           FATH0870
  063           IF(BD(20))52,52,51                                                           FATH0880
  064        51 BVAN(L) = 0.0                                                                FATH0890
  065           GO TO 53                                                                     FATH0900
  066        52 BVAN(L) = BD(K)                                                              FATH0910
  067        53 KK=KK+3                                                                      FATH0920
  068           NB=NB+1                                                                      FATH0930
  069        54 KK=KK+1                                                                      FATH0940
  070           IF(BD(30))55,55,57                                                           FATH0950
  071        55 DO 56 I=57,112                                                               FATH0960
  072           BD(I) = BD(I+503)                                                            FATH0970
  073        56 BD(I+503) = 0.0                                                              FATH0980
  074           I=20                                                                         FATH0990
  075           IF(NA-3)58,58,57                                                             FATH1000
  076        57 I=40                                                                         FATH1010
  077        58 DO 59 J=1,20                                                                 FATH1020
  078           BD(J+20)=BD(J)                                                               FATH1030
  079           K=J+1                                                                        FATH1040
  080           L=20+3*J                                                                     FATH1050
  081           BD(L)=BD(K)*BC(170)/2000.0                                                   FATH1060
  082        59 BD(L+1)=BD(L)                                                                FATH1070
  083           BD(47)=BC(180)/BC(187)                                                       FATH1080
  084           IF(BD(41))60,60,61                                                           FATH1090
  085        60 L=175                                                                        FATH1100
  086           GO TO 62                                                                     FATH1110
  087        61 L=181                                                                        FATH1120
  088        62 BD(48)=CODIM2(BD(47),BC(172),BC(L),3,.5)                                     FATH1130
  089           BD(49)=CODIM2(BD(47),BC(172),BC(L+3),3,.5)                                   FATH1140
  090           BD(51) = CODIM2(1.0,BC(172),BC(L),3,.5)                                      FATH1150
  091           BD(52) = CODIM2(1.0,BC(172),BC(L+3),3,.5)                                    FATH1160
  092           I=60                                                                         FATH1170
```

```
CARD NO    ****                          CONTENTS                          ****

 994          DO 60 J=1,20                                                  FATM0720
 995          K=J+1                                                         FATM0725
 996          BD(K) = BD(J+20)*BD(51)                                       FATM0730
 997          BD(K+1) = BD(J+20)*BD(52)                                     FATM0735
 998          BD(K+61)=BD(J+20)*BD(40)                                      FATM0740
 999          BD(K+62)=BD(J+20)*BD(49)                                      FATM0745
1000       60 I=I+2                                                         FATM0750
1001          BMAN(200) = BD(51)                                            FATM0751
1002          BMAN(210) = BD(52)                                            FATM0752
1003          BMAN(219) = BD(40)                                            FATM0753
1004          BMAN(220) = BD(49)                                            FATM0754
1005          BD(400)=9.0                                                   FATM0755
1006          BD(500)=10.0                                                  FATM0760
1007          BD(611)=11.0                                                  FATM0765
1008          BD(50) = BC(13)/2.0                                           FATM0770
1009          I = 175                                                       FATM0810
1010          J = 175                                                       FATM0812
1011          IF(ND(14))66,66,93                                            FATM0813
1012       93 J = 101                                                       FATM0814
1013          IF(BD(137) - 2.0) 66,66,66                                    FATM0815
1014       65 I=101                                                         FATM0820
1015       66 BD(45)=CODIM2(BD(145),BC(172),BC(I),3,.5)                     FATM0825
1016          BD(46)=CODIM2(BD(145),BC(172),BC(I+3),3,.5)                   FATM0830
1017          BD(612)=BD(50)*(BD(45)+BD(19)*BD(57)/2.0)                     FATM0835
1018          BD(613)=BD(50)*(BD(46)+BD(20)*BD(57)/2.0)                     FATM0840
1019          BD(614)=BC(170)                                               FATM0845
1020          BD(615) = CODIM2(1.0,BC(172),BC(J),3,.5)*1.2                  FATM0850
1021          BD(616) = CODIM2(1.0,BC(172),BC(J+3),3,.5)*1.2                FATM0855
1022          BD(617)=BC(170)                                               FATM0860
1023       67 I=1                                                           FATM0862
1024          K=1                                                           FATM0864
1025          L = 1                                                         FATM0867
1026          M = 1                                                         FATM0868
1027          IF(IO(95))9501,9501,9502
1028     9501 CONTINUE
1029       68 IF(K-486)95,94,94                                             FATM0870
1030       94 WRITE(6,94)BD(1)                                              FATM0872
1031       94 FORMAT(1H1,65X,20H** FATMG - IP(95) **//                      FATM0873
1032         1              4X,18HSPECTRA SEGMENT NO,F4.0//7X,               FATM0874
1033         1 12HSOF BEND MOM,3X,12HWDS BEND MOM,5X,18HEXCEEDANCES-TAXI)     FATM0875
1034          GO TO 97                                                      FATM0876
1035       95 WRITE(6,80)BD(1)                                              FATM0878
1036       80 FORMAT(1H1,65X,20H** FATMG - IP(95) **//                      FATM0879
1037         1              4X,18HSPECTRA SEGMENT NO,F4.0//7X,               FATM0880
1038         1 12HSOF BEND MOM,3X,12HWDS BEND MOM,5X,18HEXCEEDANCES-GUST,3X,  FATM0880
1039         2 15HEXCEEDANCES-MAN)                                           FATM0884
1040       97 DO 74 J=1,20                                                  FATM0881
1041          IF(J-11)72,70,72                                              FATM0882
1042       70 WRITE(6,71)                                                   FATM0884
1043       71 FORMAT(1H0)                                                   FATM0885
1044       72 K=J+1                                                         FATM0886
1045          IF(K-486)101,101,99                                           FATM0888
1046       99 WRITE(6,100)BD(K),BD(K+1),BD(K+2)                             FATM0892
1047      100 FORMAT(1H 4X2F15.0,5XE12.5)                                   FATM0893
1048          GO TO 74                                                      FATM0894
1049      101 WRITE(6,73)BD(K),BD(K+1),BD(K+2),BMAN(L)                      FATM0895
1050       73 FORMAT(1H 4X2F15.0,5XE12.5,5XE12.5)                           FATM0897
1051          L = L+ 1                                                      FATM0898
1052       74 I=I+2                                                         FATM0899
1053          IF(K-486)102,102,103                                          FATM0901
1054      102 WRITE(6,96) BMAN(M+200),BMAN(M+210)                           FATM0902
1055       96 FORMAT(/11HIO SOF M =,F15.0,3X,10HIO WDS M =,F15.0)           FATM0903
1056          M = M + 1                                                     FATM0904
1057      103 IF(ND(30))76,76,75                                            FATM0905
1058       75 IF(K-486)77,9502,9502
1059       76 IF(K-600)77,70,70                                             FATM0908
1060       77 I=K+3                                                         FATM0910
1061          GO TO 68                                                      FATM0915
1062       78 WRITE(6,79)BD(611)                                            FATM0906
1063       79 FORMAT(1H1,65X,20H** FATMG - IP(95) **//
1064         1              4X,18HSPECTRA SEGMENT NO,F4.0//5X,24HGROUND-AIR-GRO
```

```
CARD NO    ****                          COMMENTS                          ****

 1055          WRITE CYCLES//70,2THOUT BEND MOM  NOS BEND MOM,70,11HOCCURRENCES)
 1056          WRITE(6,80) (BD(J),J=512,617 )                                FAIH0070
 1057       80 FORMAT(1H ,5X,2F19.0,5X,1E12.5 )                              FAIH0075
 1058      1000 CONTINUE
 1059     C
 1060     C
 1061     C
 1062          DO 115 N=1,630
 1063      115 BUFFW(N) = 0.0
 1064          DO 116 N=627,800
 1065      116 BUFFW(N) = BUFFH(N-626)
 1066     C
 1067        IF(ND(13))112,112,113
 1068     C
 1069      112 LIMIT = 10
 1070          GO TO 114
 1071     C
 1072      113 LIMIT = 8
 1073     C
 1074      114 DO 117 I=1,LIMIT
 1075          L1 = (I-1) * 80 + 1
 1076          L2 = 80+1
 1077          DO 118 N=L1,L2
 1078      118 BUFFW(N) = BD(N+1)
 1079      117 CONTINUE
 1080     C
 1081          DO 120 N=801,800
 1082      120 BUFFW(N) = BD(N+1)
 1083          DO 122 I=627,800                                              FAIH
 1084      122 BUFFW(I) = BUFFH(I-626)                                       FAIH
 1085     C
 1086          CALL WRITMS (1,BUFFW(1),630,35)
 1087     C
 1088          RETURN                                                        FAIH0075
 1089     C
 1090          END                                                           FAIH0080
 1091     C
 1092     C ****************************************************************
 1093     C                        FUNCTION FCSDM2
 1094     C ****************************************************************
 1095     C
 1096          FUNCTION FCSDM2(X,Y,X1,Y1,Z1,N1,N2,IX)                        FCSD0001
 1097     C    THIS DIMENSION CURVE FIT SUBPROGRAM.  FCSDM2                  FCSD0010
 1098     C    CALLING SEQUENCE                                              FCSD0020
 1099     C    Z = FCSDM2(X,Y,X1,Y1,Z1,N1,N2,IX)                             FCSD0030
 1100     C        X = ARGUMENT - 1ST VARIABLE                               FCSD0040
 1101     C        Y = ARGUMENT - 2ND VARIABLE                               FCSD0050
 1102     C       X1 = ARRAY OF 1ST VARIABLE                                 FCSD0060
 1103     C       Y1 = ARRAY OF 2ND VARIABLE                                 FCSD0065
 1104     C       Z1 = ARRAY OF THE   DEPENDENT VARIABLE                     FCSD0080
 1105     C       N1 = NO. OF POINTS - Y1                                    FCSD0085
 1106     C       N2 = NO. OF POINTS - X1                                    FCSD0070
 1107     C       IX = 2ND INTERVAL INTERPOLATION CONTROL CONSTANT           FCSD0075
 1108          COMMON TCOM(400)                                              FCSD0085
 1109          DIMENSION        ND(200),X1(1),Y1(1),Z1(1),Y2(N)              FCSD0090
 1110          EQUIVALENCE                    (ND(1),TCOM(201)),             FCSD0092
 1111         1            (ND,ND(130),(NN,ND(130),(I,ND(140)),(K,ND(141)),(L,FCSD0093
 1112         2ND(140))                                                      FCSD0094
 1113      100 IF(N1-4)110,110,120                                           FCSD0095
 1114      110 N3 = 1                                                        FCSD0100
 1115          NN = N1                                                       FCSD0105
 1116          GO TO 200                                                     FCSD0110
 1117      120 NN = 4                                                        FCSD0115
 1118          K  = 1                                                        FCSD0120
 1119      125 IF(Y1(K)-Y)130,150 150                                        FCSD0125
 1120      130 K = K+1                                                       FCSD0130
 1121          IF(K-N1)125,125,165                                           FCSD0135
 1122      150 IF(K-3)155,155,160                                            FCSD0140
 1123      155 N3 =1                                                         FCSD0145
 1124          GO TO 200                                                     FCSD0150
 1125      160 IF(K-N1)170,165,165                                           FCSD0155
```

```
CARD NO   ****                          CONTENTS                          ****

 1136       100 NS = NH-3                                                  FCOD0160
 1137           GO TO 200                                                  FCOD0165
 1138       170 NS = N -2                                                  FCOD0170
 1139       200 DO 300 I = 1,NN                                            FCOD0175
 1140           L =(NS-1)*N2 +I                                            FCOD0180
 1141           YS(I) = Y(NS)                                              FCOD0185
 1142           T(I) = CODIM(X,XI,Z1(L),N2,NX)                             FCOD0190
 1143       300 NS = NS+1                                                  FCOD0195
 1144           FCODM = CODIM(Y,YS,1,NN,NX)                                FCOD0200
 1145           RETURN                                                     FCOD0205
 1146           END                                                        FCOD0210
 1147     C
 1148     C ((((((((((((((((((((((((((((((((((((((((((((((((((((((((((((((((((((((((((((((((((((((((((((((((((((((((((((((((((((((((((((((((((
 1149     C                        SUBROUTINE FUSET
 1150     C ))))))))))))))))))))))))))))))))))))))))))))))))))))))))))))))))))))))))))))))))))))))))))))))))))))))))))))))))))))))))))))))))))))))))
 1151     C
 1152           SUBROUTINE FUSET
 1153     C
 1154     C
 1155     C        SUBROUTINE TO STORE TOTAL AIRLOADS DATA FOR FUSELAGE
 1156     C        IN RECORD 33
 1157     C
 1158           COMMON TCOM(4400),HLD(300),IDUM(132),SANE(132),HET(132),
 1159          * BHZ(132),RC(44),SW(100),STEMPH(23),STEMPM(23),STEMPV(23),
 1160          * DUM(100)
 1161     C
 1162           COMMON /MISC/ XMISC(100)
 1163     C
 1164           DIMENSION HD(200),BD(620),BC(100)
 1165           DIMENSION TSKINF(23)
 1166           DIMENSION FUS(672),BB(20)
 1167     C
 1168           EQUIVALENCE (HD(1),TCOM(420)),(BD(1),TCOM(330)),(BC(1),TCOM(2750
 1169          *)),(I,HD(101)),(BB(1),TCOM(2953))
 1170           EQUIVALENCE (SW(116),TSKINF(1))
 1171     C
 1172           IF(I - 1) 700,700,8
 1173         8 K = I - 1
 1174           DO 10 J=1,K
 1175           IF(HD(J+100)) 10,10,710
 1176        10 CONTINUE
 1177     C
 1178       700 DO 701 N=1,672
 1179       701 FUS(N) = 0.0
 1180     C
 1181       710 IF (I - 23) 615,615,3012
 1182     C
 1183       615 NX = (I - 1) * 20
 1184     C
 1185           IF(I - 8)601,602,603
 1186       601 FUS(NX+2) = 1.0
 1187           GO TO 612
 1188       602 FUS(NX+2) = 2.0
 1189           GO TO 612
 1190       603 IF(I-9)604,604,605
 1191       604 FUS(NX+2) = 3.0
 1192           FUS(233) = XMISC(35)
 1193           FUS(237) = XMISC(36)
 1194           GO TO 612
 1195       605 IF(I-10)606,606,607
 1196       606 FUS(NX+2) = 4.0
 1197           GO TO 612
 1198       607 IF(I-20)608,609,610
 1199       608 FUS(NX+2) = 5.0
 1200           GO TO 612
 1201       609 FUS(NX+2) = 6.0
 1202           GO TO 612
 1203       610 IF(I-22)609,611,611
 1204       611 FUS(NX+2) = 7.0
 1205     C
 1206       612 IF(HD(137))620,621,620
```

CARD NO **** CONTENTS ****

```
C
  620 FUS(IK+9) = BC(40)
      GO TO 622
C
  621 FUS(IK+9) = BC(71)
C
  622 FUS(IK+ 1) = 2.0
      FUS(IK+ 5) = TSKINF(1)
      FUS(IK+ 6) = IMISC(37)
      FUS(IK+ 7) = BD(10)
      FUS(IK+ 8) = BD(19)
      FUS(IK+10) = BD(20)
      FUS(IK+11) = BD(21)
      FUS(IK+14) = BD(18)
      FUS(IK+15) = BD( 8)
      FUS(IK+16) = BD( 3)
      FUS(IK+17) = BD( 5)
      FUS(IK+18) = BD( 9)
      FUS(IK+19) = BD(10)
      FUS(IK+20) = BD( 6) * 2.0
      FUS(IK+21) = BD( 8)
      FUS(IK+22) = BD( 7)
      FUS(IK+23) = BD(11) * 2.0
      FUS(IK+24) = BD(13)
      FUS(IK+25) = BD(12)
      FUS(IK+26) = BD(15)
      FUS(IK+27) = BD(17)
      FUS(IK+28) = BD(16)
      GO TO 3015
C
C     **** WRITE THE FUSELAGE LOADS IN RECORD 33    ****
C
 3012 FUS(668) = IMISC(37)
      FUS(661) = IMISC(38)
      FUS(645) = 2.0
      FUS(646) = 0.0
      FUS(648) = 80.0
C
      CALL WRITMS(1,FUS(1),672,33)
C
 3015 CONTINUE
      RETURN
      END
C
C ((((((((((((((((((((((((((((((((((((((((((((((((((((((((((((((((((((((((
C                         SUBROUTINE HAILDS
C ))))))))))))))))))))))))))))))))))))))))))))))))))))))))))))))))))))))))
C
      SUBROUTINE HAILDS
C
      COMMON TCOM(400),WLD(300),IDUM(132),SAVE(132),IDET(132),
     *  IDE2(132),RC(44),SVF(100),STEMPW(23),STEMPH(23),STEMPV(23)
     *,DUM(100),SAVET(80)
C*****CCCCC*****
C
C
      COMMON /MISC/ IMISC(100)
C
      DIMENSION HD(200),BD(620),TSKINF(23),STRESS(6),TEMP(6),
     *     STW(6),STH(6),STV(6),TEMPW(6),TEMPH(6),TEMPV(6)
C
      DIMENSION BC(195)
      DIMENSION BD(20)
      DIMENSION WAL1D(24),WD(200)                              HAIL0015
C
      DIMENSION VB0(11),BMB0(11),TB0(11),VW1(11),BMW1(11),
     * VW2(11),BMW2(11),VE1(11),BME1(11),
     * V12(11),BM12(11),VE2(11),BME2(11),
     * VE3(11),BME3(11),VH(11),BMH(11),
     * VV(11),BMV(11)
C
```

```
CARD NO    ****                    CONTENTS                    ****

          EQUIVALENCE  (ND(1),TCOM(4201)),(BD(1),TCOM(3301)),(I,ND(101))
      C
          EQUIVALENCE
         * (SVF(116),TSKINF(1)),
         *                                    (SVF(130),STW   (1)),
         * (SVF(145),TEMPW (1)),(SVF(153),STH   (1)),(SVF(159),TEMPH (1)),
         * (SVF(167),STV   (1)),(SVF(173),TEMPV (1)),(SVF(151),NWING    ),
         * (SVF(165),NWER     ),(SVF(170),NWER     ),(SVF(152),SDOW     ),
         * (SVF(165),SDOH     ),(SVF(180),SDOV     )
      C
          EQUIVALENCE (SDOW,WLD(1)) , (POSHZ,WLD(2)) , (XNEGHZ,WLD(3)) ,
         * ( VD0(1),WLD( 4)) , (BMD0(1),WLD( 15)) , ( T20(1),WLD( 26)) ,
         * ( VH1(1),WLD( 37)) , (BMH1(1),WLD( 48)) ,
         * ( VH2(1),WLD( 70)) , (BMH2(1),WLD( 81)) ,
         * ( V21(1),WLD(103)) , (BM21(1),WLD(114)) ,
         * ( V12(1),WLD(136)) , (BM12(1),WLD(147)) ,
         * ( V02(1),WLD(169)) , (BM22(1),WLD(180)) ,
         * ( V23(1),WLD(202)) , (BM23(1),WLD(213)) ,
         * (  VH(1),WLD(235)) , ( BMH(1),WLD(246)) ,
         * (  VV(1),WLD(268)) , ( BMV(1),WLD(279))
      C
          EQUIVALENCE (BC(1),TCOM(2758))
          EQUIVALENCE (BD(1),TCOM(2953))
      C
      C
      C       9-10-73--TEST FOR INITIAL CALL--SETUP WAVLID AND WD ARRAYS
       100  IF (I - 1) 101,104,104
       101  IF (I - 24) 102,102,102
       102  J = I - 1
          DO 103 N=1,J
          IF (ND(N+100)) 103,103,700
       103  CONTINUE
      C
      C              *LOAD J=INITIAL LOAD.  SETUP WAVLID AND WD ARRAYS*
      C              *WAVLID(1-24)=INDICATORS FOR CONDITIONS EVALUATED*
       104  DO 105 N=1,25
          WAVLID(N) = ND(N+100)
       105  CONTINUE
      C       10 LANDING NOT NEEDED FOR LIFTING SURFACES
          WAVLID(9) = 0.0
      C
      C              *WAVLID(24)=2-6 TAXI ID.= ND(25)*
          WAVLID(24) = ND(25)
      C
      C              *SAVE WAVLID(1&24) IN RCD 199*
          CALL WRITMS (1,WAVLID(1),24,199)
      C
      C              *SETUP WD(1-200) FROM RCD 21*
          CALL READMS (1,WD(1),200,21)
      C
      C
      C             **CLEAR SAVET ARRAY FOR MAX TORQUE SELECTION**
          DO 7001 N=1,85
          SAVET(N) = 0.0
       7001 CONTINUE
      C
      C
      C     **** LOOP 800                                          ****
      C     **** DETERMINE STEMPW, STEMPH AND STEMPV, THE STRESS LEVELS   ****
      C     **** AT THE SKIN TEMPERATURE OF THIS LOAD CONDITION           ****
      C     **** AND RSW, RSH AND RSV, THE RATIOS OF THE STRESS AT 80 DEG ****
      C     **** TO THESE STRESS IF THE MATERIAL OF THE COMPONENT IS KNOWN****
      C
       700 RSW = 1.0
          RSH = 1.0
          RSV = 1.0
      C
          DO 800 K=1,3
      C
          GO TO (801,802,803),K
      C
```

```
CARD NO    ****                    CONTENTS                    ****

      001 IF(XMISC(15))000,000,021
     C
      021 DO 005 N=1,6
          STRESS(N) = STW(N)
      005 TEMP(N) = TEMPW(N)
          NTEMP = NWING
          GO TO 010
     C
      002 IF(XMISC(19))000,000,022
     C
      002 DO 006 N=1,6
          STRESS(N) = STW(N)
      006 TEMP(N) = TEMPW(N)
          NTEMP = NHER
          GO TO 010
     C
      003 IF(XMISC(23))000,000,023
     C
      023 DO 007 N=1,6
          STRESS(N) = STW(N)
      007 TEMP(N) = TEMPV(N)
          NTEMP = NVER
     C
      010 IF(NTEMP - 1)052,052,005
     C
      052 STREST    = STRESS(1)
          GO TO 000
     C
      005 IF(TSKINF(1) - TEMP(1))050,050,005
     C
      050 L1 = 1
          L2 = 2
          GO TO 005
     C
      005 IF(TSKINF(1) - TEMP(NTEMP))075,075,000
     C
      000 L1 = NTEMP - 1
          L2 = NTEMP
          GO TO 005
     C
      075 DO 002 N=2,NTEMP
          IF(TSKINF(1) - TEMP(N))075,075,002
      075 L1 = N  - 1
          L2 = N
          GO TO 005
      002 CONTINUE
     C
      005 STREST    = STRESS(L2)  (STRESS(L2) - STRESS(L1)) *
         *  (TEMP(L2) - TSKINF(1)) / (TEMP(L2) - TEMP(L1))
     C
     C
      000 GO TO (011,012,013),K
     C
      011 STEMPW(I) = STREST
          RSW  = SSOW / STEMPW(I)
          GO TO 000
     C
      012 STEMPH(I) = STREST
          RSH  = SSOH / STEMPH(I)
          GO TO 000
     C
      013 STEMPV(I) = STREST
          RSV  = SSOV / STEMPV(I)
     C
      000 CONTINUE
     C
     C    **** SET LOADS AT TIP TO 0.0 ****
     C
          DO 90 III = 32,130,93
          IF(ABS(BO(III)) - 10.0)91,91,92
       91 BO(III) = 0.0
```

CARD NO **** CONTENTS ****

```
C*****CCCCC*****
 92   IF (ABS(BD(III+1)) - 10.0) 93,93,94
C*****CCCCC*****
   93 BD(III+1) = 0.0
C*****CCCCC*****
 94   IF (ABS(BD(III+2)) - 10.0) 95,95,90
 95   BD(III+2) = 0.0
C*****CCCCC*****
   90 CONTINUE
C
      IF(NO(25))100,105,100
C
C     **** LOOP 80 - - WING LOADS ****
C
  100 DO 80 N=1,11
C
      J = 12 - N
C
      III = 32 + (N-1) * 4
C
      IND = 0
C
      GO TO(1,1,1,1,2,1,2,3,4,1,1,2,2,1,1,2,2,1,1,1,1,1,1,1),(N),I
C
    1 VAPC = V12(J)
      BMPC = BM12(J)
      GO TO 10
C
    2 VAPC = V22(J)
      BMPC = BM22(J)
      IND = 1
      GO TO 10
C
    3 VAPC = V21(J)
      BMPC = BM21(J)
      GO TO 10
C
    4 VAPC = V23(J)
      BMPC = BM23(J)
C
   10 VNET = (BD(III) + VAPC * BD(10)) * RDM
      BNET = (BD(III+1) + BMPC * BD(10)) * RDM
C
      IF(VNET)30,40,20
C
   20 IF(VNET -   XNET(N))40,21,21
C
   21 SAVE(N) = BD(III)
      XNET(N) = VNET
      ICASN(N) = I
      RNZ(N) = BD(10) / POSNZ
C
      K = N
C
   35 RC(N) = 1.0
C
      IF(IND)25,25,40
C
   25 IF(ABS(V22(J) - V12(J)) - 10.0)40,40,26
   26 RC(N) = (VAPC- V12(J)) / (V22(J) - V12(J))
      GO TO 40
C
   30 IF(VNET -   XNET(N+11))31,31,40
C
   31 SAVE(N+11) = BD(III)
      XNET(N+11) = VNET
      ICASN(N+11) = 1
      RNZ(N+11)  = BD(10) / NEGNZ
C
      K = N + 11
      GO TO 35
```

```
CARD NO    ****                    CONTENTS                    ****

      C
         40 IF(BNET)60,80,50
      C
         50 IF(BNET -   XNET(N+22))80,51,51
      C
         51 SAVE(N+22) = BO(III+1)
      C*****CCCCC*****
            SAVET(N) = BO(III+2)
      C*****CCCCC*****
            XNET(N+22) = BNET
            IDUM(N+22) = 1
            RNZ(N+22) = RO(10) / POSNZ
      C
            N = N + 22
      C
         65 RC(N) = 1.0
      C
            IF(IND)95,95,80
      C
         95 IF(ABS(BNZ2(J) - BNZ2(J)) - 10.0)80,80,96
         96 RC(N) = (BNPC- BNZ2(J)) / (BNZ2(J) - BNZ2(J))
            GO TO 80
      C
         80 IF(BNET -   XNET(N+33))81,81,80
      C
         81 SAVE(N+33) = BO(III+1)
      C*****CCCCC*****
            SAVET(N+11) = BO(III+2)
      C*****CCCCC*****
            XNET(N+33) = BNET
            IDUM(N+33) = 1
            RNZ(N+33) = BO(10) / XNEGNZ
      C
            N = N + 33
            GO TO 85
      C
      C        26 TAXI CONDITION WING ONLY
         14 VNET = VEG(J)
            BNET = BNZG(J)
      C        TEST DOWN LOADS (NEGATIVE)
            IF(VNET) 13,17,17
      C
         13 IF(VNET - XNET(N+11)) 16,17,17
      C
         16 SAVE(N+11) = VNET
            XNET(N+11) = VNET
            IDUM(N+11) = 1
            RNZ(N+11) = 0.0
            RC(N+11) = 1.0
      C
         17 IF(BNET) 19,80,80
         19 IF(BNET - XNET(N+33)) 18,80,80
      C
         18 SAVE(N+33) = BNET
            XNET(N+33) = BNET
            IDUM(N+33) = 1
            RNZ(N+33) = 0.0
            RC(N+33) = 1.0
            SAVET(N+11) = TZG(J)
      C
         80 CONTINUE
      C
        105 IF(ND(23))106,106,107
        106 IF(ND(26)) 108,108,107
        108 IF(ND(27)) 195,195,107
      C
      C     **** LOOP 100 - - HORIZONTAL TAIL LOADS ****
      C
        107 GO TO(6,6,6,6,7,6,7,6,6,6,6,7,7,6,6,7,7,6,6,6,6,6,6,195),1
      C
          6 XC6 = BC(6)
```

```
CARD NO   ****                          COMMENTS                          ****

 1002          GO TO 19
 1003    C
 1004        7 XCG = QC(5)
 1005          GO TO 19
 1006    C
 1007        8 XCG = QC(2)
 1008          GO TO 19
 1009    C
 1010        9 XCG = QC(12)
 1011    C
 1012       10 IF(ND(23)) 11,11,12
 1013       11 IF(ND(28)) 102,102,12
 1014       12 XCGHT = QC(107) + .057 * QC(108)
 1015    C
 1016          HTHZ = QD(10) - (QD(20) * (XCGHT-XCG) / 200.0)
 1017    C
 1018          DO 100 N=1,11
 1019    C
 1020          III = 55 + (N-1)*4
 1021    C
 1022          J = 12 - N
 1023    C
 1024          VNET = (QD(III) + VN(J) * HTHZ) * RDH
 1025          DNET = (QD(III+1) + DN(J) * HTHZ) * RDH
 1026    C
 1027          IF(VNET)130,140,120
 1028    C
 1029      120 IF(VNET -   XNET(N+44))140,121,121
 1030    C
 1031      121 SANE(N+44) = QD(III)
 1032          XNET(N+44) = VNET
 1033          IDUPN(N+44) = 1
 1034          RNE(N+44) = HTHZ /  FOSHZ
 1035          GO TO 140
 1036    C
 1037      130 IF(VNET -   XNET(N+55))131,131,140
 1038    C
 1039      131 SANE(N+55) = QD(III)
 1040          XNET(N+55) = VNET
 1041          IDUPN(N+55) = 1
 1042          RNE(N+55) = HTHZ /  XNEGHZ
 1043    C
 1044      140 IF(DNET)160,160,150
 1045    C
 1046      150 IF(DNET -   XNET(N+66))160,151,151
 1047    C
 1048      151 SANE(N+66) = QD(III+1)
 1049    C****CCCCC*****
 1050          SANET(N+22) = QD(III+2)
 1051    C****CCCCC*****
 1052          XNET(N+66) = DNET
 1053          IDUPN(N+66) = 1
 1054          RNE(N+66) = HTHZ /  FOSHZ
 1055          GO TO 100
 1056    C
 1057      160 IF(DNET -   XNET(N+77))161,161,100
 1058    C
 1059      161 SANE(N+77) = QD(III+1)
 1060    C****CCCCC*****
 1061          SANET(N+33) = QD(III+2)
 1062    C****CCCCC*****
 1063          XNET(N+77) = DNET
 1064          IDUPN(N+77) = 1
 1065          RNE(N+77) = HTHZ /  XNEGHZ
 1066    C
 1067      100 CONTINUE
 1068    C
 1069      190 IF(ND(23))191,191,192
 1070      191 IF(ND(27))195,195,192
 1071    C
 1072    C     **** LOOP 200 - - VERTICAL TAIL LOADS ****
```

CARD NO **** CONTENTS ****

```
C
  102 XCOVT = BC(130) + .007 * BC(140)
      VTNY = BD(19) - (BD(21) * (XCOVT - XCG) / 300.4 )
      DO 200 N=1,11
C
      III = 130 + (N-1)*4
C
      J = 12 - N
C
      VNET = ABS(BD(III) + VV(J) * VTNY) * RSV
      BNET = ABS(BD(III+1) + BHV(J) * VTNY) * RSV
C
      IF(VNET -   XNET(N+88))240,240,221
C
  221 SAVE(N+88) = ABS(BD(III))
      SAVE(N+99) =-SAVE(N+88)
      XNET(N+88) = VNET
      IDUM(N+88) = 1
      IDUM(N+99) = IDUM(N+88)
      RNZ(N+88) = VTNY / POSNZ
      RNZ(N+99) = RNZ(N+88)
C
  240 IF(BNET -   XNET(N+110))200,200,251
C
  251 SAVE(N+110) = ABS(BD(III+1))
      SAVE(N+121) =-SAVE(N+110)
C*****CCCCC*****
      SAVET(N+44) = BD(III+2)
      SAVET(N+55) = -SAVET(N+44)
C*****CCCCC*****
      XNET(N+110) = BNET
      IDUM(N+110) = 1
      IDUM(N+121) = IDUM(N+110)
      RNZ(N+110) = VTNY / POSNZ
      RNZ(N+121) = RNZ(N+110)
C
  200 CONTINUE
C
C       9-19-73--SETUP BD(1-200) FOR LOADS DATA SAVE ON RCD (100-103)*
  100 IF(I - 9) 200,900,200
  200 BD(101) = BC(1)
      BD(103) = MD(103)
C
C             *TEST FOR LOAD 1-23
      IF (I - 24) 201,202,202
  201 BD(102) = BD(1)
      IF(BD(102) - BD(101)) 205,205,205
  205 BD(104) = MD(104)
      BD(105) = MD(105)
      GO TO 207
  206 BD(104) = 0.0
      BD(105) = 0.0
  207 BD(106) = TSKINF(1)
      BD(107) = TSKINF(1)
      BD(108) = TSKINF(1)
      GO TO 204
C
C             *LOAD 24--2-G TAXI*
  202 BD(102) = BC(1)
      BD(104) = 0.0
      BD(105) = 0.0
      BD(106) = 00.0
      BD(107) = 00.0
      BD(108) = 00.0
C
C             *CLEAR LOADS PART OF BD ARRAY--BC(1-100)*
      DO 203 N=1,100
      BD(N) = 0.0
  203 CONTINUE
C
C             *SAVE BD(1-200) IN RCD 100-103 BASED ON INDICATOR  (1)*
```

CARD NO **** CONTENTS ****

```
      200  N = 1 , 100
           CALL WRITHS (1,BD(1),200,N)
      C
      C
        999 RETURN
              END
      C
      C ((((((((((((((((((((((((((((((((((((((((((((((((((((((((((((((((((((((((((((((((((((((((((
      C                        SUBROUTINE SPAN
      C )))))))))))))))))))))))))))))))))))))))))))))))))))))))))))))))))))))))))))))))))))))))))))
      C
           SUBROUTINE SPAN                                                    33000001
      C    SUBROUTINE SPAN FOR LINK 9 OF SWEEP.                               33000002
      C    CALCULATES MIND + EXPENDABLE SPANWISE SH-BH-TOR DUE TO AIRLOADS.   33000003
           COMMON TCOM(4400)                                                  33000004
           COMMON /IPRINT/IO(80)
           DIMENSION BD(20),BC(100),BO(620),BS(20),BU(200),ND(200)            33000005
           EQUIVALENCE (BC(1),TCOM(2700)),(BU(1),TCOM(3153)),(BD(1),TCOM(330)33000020
          1)),(BS(1),TCOM(2873)),(BB(1),TCOM(2063)),(ND(1),TCOM(420)),(IP,ND)33000021
          2(137)),(ID,ND(19)),(I,ND(155)),(J,ND(156)),(K,ND(157)),(L,ND(158)33000022
          3),(M,ND(159))                                                      33000023
           I=0                                                                33000090
         2 DO 3 J=1,92                                                        33000100
           K=I+J+32                                                           33000110
         3 BO(K)=0.0                                                          33000120
           IF(K-100)4,5,5                                                     33000130
         4 I=I+63                                                             33000140
           GO TO 2                                                            33000150
         5 ID=1                                                               33000160
           BD(23)=BC(37)                                                      33000170
           IF(ND(23))1,1,6                                                    33000175
         1 IF(ND(25))15,15,6                                                  33000180
         6 BS(1)=.5*BU(206)/BU(2)                                             33000190
           IF(IP)8,7,8                                                        33000200
         7 I=70                                                               33000210
           J=70                                                               33000220
           GO TO 9                                                            33000240
         8 I=45                                                               33000250
           J=30                                                               33000260
         9 BS(2)=6.*BC(1)                                                     33000280
           BS(3)=BC(J)                                                        33000290
           I=0                                                                33000300
           DO 13 J=1,12                                                       33000320
           K=I+J+30                                                           33000400
           BO(K)=BS(2)*BU(J+6)/COS(BS(3)/57.3)                                33000410
        13 I=I+3                                                              33000420
           I=6                                                                33000430
           J=24                                                               33000440
           K=32                                                               33000450
           GO TO 20                                                           33000460
        14 ID=2                                                               33000470
           BS(1)=.5*BU(227)/BU(62)                                            33000480
           I=68                                                               33000490
           J=24                                                               33000500
           K=68                                                               33000510
           GO TO 20                                                           33000520
        15 ID=3                                                               33000530
           BO(75)=BB(13)                                                      33000535
           BO(76)=BC(113)                                                     33000540
           IF(ND(23))47,47,16                                                 33000545
        47 IF(ND(25))19,19,16                                                 33000550
        16 BS(1) = 0.5*BU(220)/BU(100)*1.15                                   33000560
           BS(2)=6.*BC(112)                                                   33000570
           BS(3)=BC(106)                                                      33000580
           I=0                                                                33000590
           DO 18 J=1,12                                                       33000650
           K=I+J+70                                                           33000660
           BO(K)=BS(2)*BU(J+114)/COS(BS(3)/57.3)                              33000670
        18 I=I+3                                                              33000680
           I=112                                                              33000690
           J=77                                                               33000700
```

CARD NO **** CONTENTS ****

```
      K=128                                                             33000710
      GO TO 20                                                          33000720
   19 BO(128)=BC(145)                                                   33000730
      BO(128)=BB(14)                                                    33000735
      IF(ND(23))40,40,20                                                33000737
   40 IF(ND(27))41,41,20                                                33000740
   20 IF(ND(15))21,22,23                                                33000750
   21 ID=5                                                              33000760
      GO TO 24                                                          33000780
   22 ID=4                                                              33000790
      BS(1)=.95*BO(15)                                                  33000800
      GO TO 25                                                          33000810
   23 ID=6                                                              33000820
   24 BS(1)=BO(15)                                                      33000830
   25 BS(2)=BC(144)*12                                                  33000840
      BS(3)=BC(138)                                                     33000850
      I=0                                                               33000810
      DO 27 J=1,12                                                      33000820
      K=I+J+132                                                         33000830
      BO(K)=BS(2)*BU(J+173)/COS(BS(3)/57.3)                             33000840
   27 I=I+3                                                             33000850
      I=171                                                             33000860
      J=138                                                             33000870
      K=187                                                             33000880
   28 IF(ID-5)29,30,32                                                  33000890
   29 BS(5)=0.0                                                         33001000
      GO TO 33                                                          33001010
   30 BS(6)=BC(104)/COS(BS(3)/57.3)                                     33001015
      IF(BC(104)-BC(145))29,32,32                                       33001020
   32 BS(5)=1.0                                                         33001040
   33 BO(J)=BO(J)+BS(1)*BU(1)                                           33001050
      BO(J+1)=BO(J+1)+BS(1)*BU(I+1)+BS(5)*ABS(.30*BO(11)*BO(12))        33001060
      BO(J+2)=BO(J+2)+BS(1)*(BU(I+2))                                   33001070
      DO 38 L=2,46,4                                                    33001080
      M=J+L+2                                                           33001100
      BO(M)=BO(M)+BS(1)*BU(K)                                           33001110
      IF(ID-5)37,34,37                                                  33001120
   34 IF(BS(6)-BO(M-1))35,36,36                                         33001130
   35 BS(5)=0.0                                                         33001140
      GO TO 37                                                          33001150
   36 BS(5)=1.0                                                         33001160
   37 V1=COS(BS(3)/57.3)                                                33001161
      V2=SIN(BS(3)/57.3)                                                33001162
      BO(M+1)=BO(M+1)+BS(1)*BU(K+13)+BS(5)*ABS(.30*BO(11)*BO(12))*V1    33001170
      BO(M+2)=BO(M+2)+BS(1)*BU(K+26)+BS(5)*ABS(.30*BO(11)*BO(12))*V2    33001180
   38 K=K+1                                                             33001200
      IF(ID-2)39,15,40                                                  33001210
   39 IF(BB(5))14,15,14                                                 33001220
   40 IF(ID-4)19,41,41                                                  33001230
   41 CONTINUE                                                          33001240
      IF(IQ(51))9501,9501,9502
 9501 CONTINUE
      IF(ND(23))49,49,50                                                33001250
   49 IF(ND(25))51,51,50                                                33001260
   50 WRITE(6,42)BO(1),BB(10),BB(9),BB(5)                               33001270
   42 FORMAT(1H1,3X,10HWING LOADS,3X,8HCOND NO=,F7.0,3X,3HMN=,F6.3,
     * 5X,4HALT=,F7.0,5X,3HDF=,F6.2,16X,20H** SPARM - IP(51) **)
      WRITE(6,43)(BO(I),I=23,26)                                        33001280
   43 FORMAT(1H0,3X,8HSOB DIST=,F7.2,2HIN,4X,10HBH AT SOB=,F9.0,2HLB,4X,
     * 10HBM AT SOB=,F12.0,5HIN-LB,4X,10HTN AT SOB=,F12.0,5HIN-LB///
     * 13X,7HSTATION,18X,5HSHEAR,18X,8HBEND MOM,21X,8HTORS MOM/
     * 14X,4H(IN),21X,4H(LB),19X,7H(IN-LB),22X,7H(IN-LB)/)
      WRITE(6,44)(BO(I),I=27,74)                                        33001290
   44 FORMAT(1H F19.2,F24.0,F26.0,F29.0)                                33001301
 9502 CONTINUE
   51 IF(IQ(51))9503,9503,9504
 9503 CONTINUE
      IF(ND(23))52,52,53
   52 IF(ND(26))54,54,53                                                33001300
   53 WRITE(6,45)BO(1),BB(10),BB(9)                                     33001300
   45 FORMAT(1H1, 3X,21HHORIZONTAL TAIL LOADS,3X,8HCOND NO=,F7.0,3X,
```

```
CARD NO    ****                          CONTENTS                          ****

1046           * 3H0H,F6.3,5X,4HALT=,F7.0,10X,20H** SPAN - IP(51) **)
1047           WRITE(6,43)(BD(I),I=70,78)                                  33001310
1048           WRITE(6,44)(BD(I),I=80,127)                                 33001320
1049       9504 CONTINUE
1050         94 IF(ID(51))9505,9505,9506
1051       9505 CONTINUE
1052           IF(ND(23))95,96,96
1053         95 IF(ND(27))97,97,96                                         33001325
1054         96 WRITE(6,46)BD(1),BD(18),BD(9)                              33001330
1055         46 FORMAT(1H1,3X,18HVERTICAL TAIL LOADS.3X,8HCOND NO=,F7.0,3X,
1056          * 3H0H,F6.3,5X,4HALT=,F7.0,21X,20H** SPAN - IP(51) **)
1057           WRITE(6,43)(BD(I),I=120,132)                                33001340
1058           WRITE(6,44)(BD(I),I=133,180)                                33001350
1059         97 CONTINUE
1060       9000 CONTINUE
1061           RETURN                                                      33001360
1062           END                                                         33001370
1063       C
1064       C ((((((((((((((((((((((((((((((((((((((((((((((((((((((((((((((((((((((((((((((((((((((((((((((((((((((((((((((((((((((((((((((((
1065       C                          SUBROUTINE USPAN
1066       C )))))))))))))))))))))))))))))))))))))))))))))))))))))))))))))))))))))))))))))))))))))))))))))))))))))))))))))))))))))))))))))))
1067       C
1068           SUBROUTINE USPAN                                            31000001
1069       C   SUBROUTINE USPAN FOR LINK 5 OF SHEEP.                       31000002
1070       C   DERIVES WING AND EXPENDABLE UNIT AIRLOAD DISTRIBUTIONS AND FACTORS.31000003
1071           COMMON TCOM(4400)                                           31000004
1072           COMMON /IPRINT/ID(80)
1073           DIMENSION ND(200),DT(55),DB(853),DF(146),DP(734),DC(105),DD(20),DS31000005
1074          1(20),DD(100),DU(200),YA(5),YB(20),YC(5),YS(15),ED(5),ES(15),DX(15)31000006
1075           EQUIVALENCE (DT(1),TCOM(100)),(DB(1),TCOM(155)),(DF(1),TCOM(1000))31000013
1076          1,(DP(1),TCOM(1155)),(ND(1),TCOM(420)),(DC(1),TCOM(2750)),(DD(1),T31000014
1077          2COM(2853)),(DS(1),TCOM(2973)),(DD(1),TCOM(2983)),(DU(1),TCOM(3153)31000015
1078          3),(CM,DD(18)),(VT,DD(14)),(YA(1),DD(11)),(YB(1),DD(6)),(YC(1),DD(231000016
1079          4)),(YS(1),DD(51)),(ED(1),DD(31)),(ES(1),DD(36)),(DX(1),DD(68)),(KD31000017
1080          5T,ND(135)),(NF,ND(100)),(I,ND(132)),(J,ND(133)),(K,ND(134)),(L,ND31000018
1081          6135)),(IP,ND(137)),(N,ND(140))                             31000019
1082           DO 1 I=1,200                                                31000020
1083         1 DU(I)=0.0                                                   31000021
1084           NT=1                                                        31000030
1085         2 DO 9 I=1,11                                                 31000040
1086           IF(NT-3)3,6,7                                               31000050
1087         3 J=21-I                                                      31000060
1088           IP=DD(12)-2.0                                               31000065
1089           IF(IP)5,4,5                                                 31000070
1090         4 K=I+70                                                      31000080
1091           L=78                                                        31000090
1092           GO TO 8                                                     31000100
1093         5 K=I+45                                                      31000110
1094           L=45                                                        31000120
1095           GO TO 8                                                     31000130
1096         6 J=127-I                                                     31000140
1097           K=I+113                                                     31000150
1098           L=112                                                       31000160
1099           GO TO 8                                                     31000170
1100         7 J=180-I                                                     31000180
1101           K=I+145                                                     31000190
1102           DU(J)=DC(K)/(DC(144)+12.0)                                  31000200
1103           GO TO 9                                                     31000210
1104         8 DU(J)=DC(K)/(DC(L)+6.0)                                     31000220
1105         9 CONTINUE                                                    31000230
1106           IF(NT - 3) 150,151,152                                      31000231
1107       150 BD(80) = DC(163)                                            31000232
1108           GO TO 153                                                   31000233
1109       151 BD(80) = DC(104)                                            31000234
1110           GO TO 153                                                   31000235
1111       152 BD(80) = DC(105)                                            31000236
1112       153 IF(BD(80) .EQ. 0.0) BD(80) = 1.0                            31000237
1113           DU(J-11)=1.0                                                31000240
1114           DU(J+11)=0.0                                                31000250
1115           IF(NT-3)10,13,14                                            31000260
1116        10 IF(IP)12,11,12                                              31000270
```

CARD NO **** CONTENTS ****

```
      11 DS(1)=BC(J+64)                                                 31000000
         DS(3)=BC(J+63)                                                 31000000
         DS(4)=BC(J+50)                                                 31000300
         GO TO 15                                                       31000310
      12 DS(1)=BC(J+33)                                                 31000320
         DS(3)=BC(J+32)                                                 31000330
         DS(4)=BC(J+28)                                                 31000340
         GO TO 15                                                       31000350
      13 DS(1)=BC(J-6)                                                  31000360
         DS(3)=BC(J-7)                                                  31000370
         DS(4)=BC(J-11)                                                 31000380
         GO TO 15                                                       31000390
      14 DS(1)=2.0*BC(J-33)                                             31000400
         DS(3)=BC(J-34)                                                 31000410
         DS(4)=BC(J-38)                                                 31000420
      15 IF(CHN-1.0)16,36,36                                            31000430
      16 IF(CHN-.95)18,18,17                                            31000432
      17 DS(17)=.95                                                     31000434
         GO TO 19                                                       31000436
      18 DS(17)=CHN                                                     31000438
      19 DS(2)=ATAN((T'N(DS(4)/57.3)-(1.0-DS(3))/(DS(1)*(1.0+DS(3))))/SQRT(31000440
        11.0-DS(17)**2))*57.3                                           31000441
         DS(5)=CODIN2:DS(17),DT(9),DT(21),12,.5)                        31000450
         DS(6)=DS(1)*DS(5)                                              31000460
         L=0                                                            31000470
         DO 20 I=1,4                                                    31000480
         K=I+L+605                                                      31000490
         YA(I)=FCODN2(DS(2),DS(6),DD(1),DD(7),DD(K),7,6,.5)             31000500
      20 L=L+41                                                         31000510
         IF(IO(52))9501,9501,9502
 9501 CONTINUE
         WRITE(6,21)DS(1),DS(2),DS(3),DS(6)                             31000512
      21 FORMAT(1H1,80X,20H** USPAN - IP(52) **//
        1 11X,33HVALUES FROM BCLA/K TABLES FOR AR=,F8.4,3X,4HBWB=,F6.2,3X, 31000513
        2 3HTR=,F7.4,3X,5HBA/K=,F8.4)                                   31000514
         WRITE(6,22)(DT(I),I=5,8),(YA(I),I=1,4)                         31000516
      22 FORMAT(1H0,7X,3HTR=,4F10.2//11X,4F10.5)                        31000517
 9502 CONTINUE
         IF(NT-3)23,25,27                                               31000520
      23 I=1                                                            31000530
         IF(IO(52))9521,9521,29
 9521 CONTINUE
         WRITE(6,24)                                                    31000534
      24 FORMAT(1H+,53X,8H(WING) )                                      31000535
         GO TO 29                                                       31000540
      25 I=100                                                          31000550
         IF(IO(52))9522,9522,29
 9522 CONTINUE
         WRITE(6,26)                                                    31000554
      26 FORMAT(1H+,53X,10H(HOR TAIL) )                                 31000555
         GO TO 29                                                       31000560
      27 I=167                                                          31000570
         IF(IO(52))9523,9523,29
 9523 CONTINUE
         WRITE(6,28)                                                    31000574
      28 FORMAT(1H+,53X,11H(VERT TAIL) )                                31000575
      29 BU(I)=CODIN2(DS(3),DT(5),YA,4,.5)*57.3/DS(5)                   31000580
         L=0                                                            31000590
         DO 30 I=1,16                                                   31000600
         K=I+L+13                                                       31000610
         YB(I)=FCODN2(DS(2),DS(6),DD(1),DD(7),DD(K),7,6,.5)             31000620
      30 L=L+41                                                         31000630
      31 DO 32 I=1,4                                                    31000640
         L=(I-1)*4+1                                                    31000650
      32 YC(I)=CODIN2(DS(3),DT(5),YB(L),4,.5)                           31000660
         IF(IO(52))9503,9503,46
 9503 CONTINUE
         WRITE(6,33)CHN                                                 31000662
      33 FORMAT(1H0,10X,34HVALUES FROM LOADING TABLES FOR MN=,F6.3)     31000664
         J=1                                                            31000666
         K=4                                                            31000667
```

```
CARD NO    ****                    CONTENTS                    ****

1988          L=1                                               31000660
1989       34 WRITE(6,35)(YS(I),I=J,K) ,DT(L)                   31000670
1990       35 FORMAT(1H0,10X,4F10.5,3X,4HSTA=,F6 3)             31000671
1991          J=J+4                                             31000672
1992          K=K+4                                             31000673
1993          L=L+1                                             31000674
1994          IF(L-4)34,34,46                                   31000675
1995       36 IF(CHN-1 )37,38,38                                31000680
1996       37 DS(17)=1 )                                        31000684
1997          GO TO 38                                          31000685
1998       38 DS(17)=CHN                                        31000686
1999       39 DS(7)=DS(1)*SQRT(DS(17)**2-1 0)                   31000687
2000          IF(DS(4)) 105,105,104                             31000690
2001      104 DS(8) = SQRT(DS(17)**2-1 0)*COS(DS(4)/57 31)/SIN(DS(4)/57 31)  31000696
2002          IF(12 0 - DS(8)) 106,107,107                      31000701
2003      106 DS(8) = 12 0                                      31000702
2004      107 L = 0                                             31000706
2005          DO 40 I=1,16                                      31000710
2006          K=I+L+14                                          31000720
2007          YS(I)=FCODN2(DS(8),DS(7),DP(6),DP(1),DP(4),0.0,.5) 31000730
2008       40 L=L+44                                            31000740
2009          IF(IQ(52))9505,9505,31
2010     9505 CONTINUE
2011          WRITE(6,41)DS(1),DS(3),DS(7),DS(8)                31000742
2012       41 FORMAT(1H1,7X,3HAR=,F8 4,3X,3HTR=,F7 4,3X,3HBA=,F8.4,3X,3HBM=,
2013         1 F8.4,30X,20H** USPAN - IP(52) **)                31000745
2014          WRITE(6,42)(DT(I),I=5,8)                          31000748
2015       42 FORMAT(1H0,7X,3HTR=,4F10 2)                       31000749
2016          IF(NT-3)43,44,45                                  31000750
2017       43 WRITE(6,24)                                       31000750
2018          GO TO 31                                          31000751
2019       44 WRITE(6,26)                                       31000753
2020          GO TO 31                                          31000754
2021       45 WRITE(6,28)                                       31000756
2022          GO TO 31                                          31000757
2023       46 IF(NT-4)47,47,48                                  31000760
2024       47 L=5                                               31000770
2025          DO 48 I=1,4                                       31000780
2026       48 ED(I)=DT(I)                                       31000790
2027          ED(5)=1 0                                         31000800
2028          YC(5)=0 0                                         31000810
2029          GO TO 50                                          31000820
2030       49 L=3                                               31000830
2031          ED(1)=0 0                                         31000840
2032          ED(2)= 5*2                                        31000850
2033          ED(3)=1 0                                         31000860
2034       50 DO 55 I=1,13                                      31000870
2035          IF(NT-3)51,52,53                                  31000880
2036       51 K=I+8                                             31000890
2037          GO TO 54                                          31000900
2038       52 K=I+14                                            31000910
2039          GO TO 54                                          31000920
2040       53 K=I+73                                            31000930
2041       54 ES(I)=BU(K)                                       31000940
2042       55 YS(I)=CODIN2(ES(I),ED,YC,L, 5)                    31000950
2043          IF(IQ(52))9507,9507,9508
2044     9507 CONTINUE
2045          WRITE(6,56)CHN                                    31000952
2046       56 FORMAT(1H1,10X,7HSTATION,10X,24HLOADING AT DATA STATIONS,5X,3H0M=,31000953
2047         1 F8 3,24X,20H** USPAN - IP(52) **)                31000953
2048          WRITE(6,57)(ED(I),YC(I),I=1,L)                    31000954
2049       57 FORMAT(1H 2F17 5)                                 31000955
2050          WRITE(6,58)                                       31000956
2051       58 FORMAT(1H0,10X,7HSTATION,10X,25HLOADING-ANALYSIS STATIONS)  31000957
2052          IF(NT-3)59,60,61                                  31000960
2053       59 WRITE(6,24)                                       31000960
2054          GO TO 62                                          31000960
2055       60 WRITE(6,26)                                       31000961
2056          GO TO 62                                          31000962
2057       61 WRITE(6,28)                                       31000963
2058       62 WRITE(6,57)(ES(I),YS(I),I=1,13)                   31000964
```

```
CARD NO    ****                          CONTENTS                          ****

 2000      9000 CONTINUE
 2000           DS(9)=0.0                                                   31000000
 2001           DO 63 I=2,12                                                31000070
 2002        63 DS(9)=DS(9)+ 5*(ES(I-1)-ES(I))*(YS(I-1)+YS(I))              31000080
 2003           DD(DD) = 0.5*(ES(12) - ES(3))*(YS(12) + YS(3))              31000081
 2004           DS(9) = DS(9) + DD(DD)*DD(DD)                               31000082
 2005           DD(DD) = DS(9) + (1.0 - DD(DD))*DD(DD)                      31000083
 2006           IF(CON - 1.0) 100,04,04                                     31000084
 2007        04 IF(NT-3)00,00,07                                            31001000
 2008        05 DU(1)=DS(1)*DS(9)                                           31001010
 2009           GO TO 00                                                    31001020
 2010        06 DU(100)=DS(1)*DS(9)                                         31001030
 2011           GO TO 00                                                    31001040
 2012        07 DU(107)=DS(1)*DS(9)                                         31001050
 2013           GO TO 00                                                    31001051
 2014       100 IF(NT - 3) 101,102,103                                      31001052
 2015       101 DU(1) = DU(1)*DS(9)/DD(DD)                                  31001053
 2016           GO TO 00                                                    31001054
 2017       102 DU(100) = DU(100)*DS(9)/DD(DD)                              31001055
 2018           GO TO 00                                                    31001056
 2019       103 DU(107) = DU(107)*DS(9)/DD(DD)                              31001057
 2020        00 IF(NT-3)00,70,70                                            31001060
 2021        00 I=33                                                        31001070
 2022           J=02                                                        31001080
 2023           K=35                                                        31001090
 2024           L=40                                                        31001100
 2025           DS(13)=DC(37)                                               31001110
 2026           IF(IP)71,70,71                                              31001120
 2027        70 DS(11)=DC(70)                                               31001130
 2028           DS(12)=DC(70)*0.0                                           31001140
 2029           GO TO 75                                                    31001150
 2030        71 DS(11)=DC(41)                                               31001160
 2031           DS(12)=DC(40)*0.0                                           31001170
 2032           GO TO 75                                                    31001180
 2033        72 I=45                                                        31001190
 2034           IF(NT-4)73,74,74                                            31001200
 2035        73 J=100                                                       31001210
 2036           K=141                                                       31001220
 2037           L=154                                                       31001230
 2038           DS(11)=DC(100)                                              31001240
 2039           DS(12)=DC(112)*0.0                                          31001250
 2100           DS(13)=DC(113)                                              31001260
 2101           GO TO 75                                                    31001270
 2102        74 DS(11)=DC(140)                                              31001280
 2103           DS(12)=DC(144)*12.0                                         31001290
 2104           DS(13)=DC(145)                                              31001300
 2105           J=107                                                       31001310
 2106           K=200                                                       31001320
 2107           L=213                                                       31001330
 2108        75 DS(14)=DS(13)/DS(12)                                        31001340
 2109           DS(15)=CDB(N2(CON),DT(9),DT(1),12, 5)                       31001350
 2110        76 DU(J)=0.0                                                   31001360
 2111           DU(K)=0.0                                                   31001370
 2112           DU(L)=0.0                                                   31001380
 2113           YD(1)=0.0                                                   31001385
 2114           IF(NT-3)77,00,01                                            31001390
 2115        77 IF(IP)70,70,70                                              31001392
 2116        78 I=70                                                        31001394
 2117           J=00                                                        31001398
 2118           GO TO 02                                                    31001399
 2119        79 I=30                                                        31001400
 2120           J=07                                                        31001402
 2121           GO TO 02                                                    31001404
 2122        00 I=100                                                       31001405
 2123           J=105                                                       31001408
 2124           GO TO 02                                                    31001410
 2125        01 I=130                                                       31001412
 2126           J=197                                                       31001414
 2127        02 DS(10)=4.0*(1.0-DS(3))*SIN(DC(I)/57.3)*COS(DC(I)/57.3)/(DS(1)*(1.0 31001416
 2128           1+DS(3)))                                                   31001418
 2129           DS(10)=DS(10)*(1.0-DS(10)*(1.0-DS(10)))                     31001420
```

```
CARD NO   ****                    CONTENTS                                  ****
2130          DS(10)=DC(J)*(1.0-DS(10)*(1.0-DC(J)))                          31001420
2131          DS(10)=1.0-DS(10)*(1.0-DC(J)-DS(10))                           31001430
2132          DS(20)=1.0-DS(14)*(1.0-DS(3))*DS(11)*COS(DC(1)/57.3)/DS(10)    31001440
2133          K=0                                                            31001450
2134          GO TO (83,84,85,86,87),NT                                      31001460
2135       83 L=17                                                           31001470
2136          GO TO 87                                                       31001480
2137       84 L=18                                                           31001490
2138          GO TO 87                                                       31001500
2139       85 L=19                                                           31001510
2140          K=114                                                          31001520
2141          GO TO 87                                                       31001530
2142       86 L=20                                                           31001540
2143          K=173                                                          31001550
2144       87 DD(L)=DS(20)*(DS(10)-DS(10))                                   31001560
2145          DO 88 J=1,13                                                   31001570
2146          K=K+1                                                          31001580
2147          IF(BU(K)-DS(14))88,88,88                                       31001590
2148       88 DX(J)=DD(L)*(DS(14)-BU(K))*DS(12)*SIN(DC(1)/57.3)              31001600
2149          GO TO 89                                                       31001610
2150       89 DX(J)=(1.0-BU(K)*(1.0-DS(3))*DS(11)*COS(DC(1)/57.3)/DS(10)*(DS(10)31001620
2151         1)-DS(10))                                                      31001630
2152       90 CONTINUE                                                       31001640
2153          IF(IO(52))9000,9000,9010                                       31001650
2154     9000 CONTINUE                                                       31001660
2155          WRITE(6,91)                                                    31001670
2156       91 FORMAT(1H0,10X,7HSTATION,10X,8HDX SHEEP)                       31001680
2157          WRITE(6,92)(ES(I),DX(I),I=1,13)                                31001690
2158       92 FORMAT(1H F17.5,F17.3)                                         31001700
2159     9010 CONTINUE                                                       31001710
2160          YS(1) = YS(1)/DS(9)                                            31001720
2161          DO 101 I=2,12                                                  31001730
2162          GO TO (93,97,99,99,99),NT                                      31001740
2163       93 J=I+21                                                         31001750
2164          K=I+34                                                         31001760
2165          L=I+47                                                         31001770
2166       94 IF(IP)95,95,96                                                 31001780
2167       95 M=70                                                           31001790
2168          GO TO 100                                                      31001800
2169       96 M=30                                                           31001810
2170          GO TO 100                                                      31001820
2171       97 J=I+60                                                         31001830
2172          K=I+81                                                         31001840
2173          L=I+94                                                         31001850
2174          GO TO 94                                                       31001860
2175       98 J=I+127                                                        31001870
2176          K=I+140                                                        31001880
2177          L=I+153                                                        31001890
2178          M=100                                                          31001900
2179          GO TO 100                                                      31001910
2180       99 J=I+166                                                        31001920
2181          K=I+180                                                        31001930
2182          L=I+212                                                        31001940
2183          M=130                                                          31001950
2184      100 YS(I)=YS(I)/DS(9)                                              31001960
2185          BU(J)= BU(J-1)+ 0.5*(ES(I-1)-ES(I))*(YS(I-1)+YS(I))            31001970
2186          BU(K)=BU(K-1)+ 0.5*DS(12)*(ES(I-1)-ES(I))*(BU(J-1)+BU(J))/COS(DC(M)/31001980
2187         1 57.3)                                                         31001990
2188      101 BU(L)=BU(L-1)- 0.5*(ES(I-1)-ES(I))*(YS(I-1)*DX(I-1)+YS(I)*DX(I))31002000
2189          YS(13) = YS(13)/DS(9)                                          31002010
2190          BU(J+1) = BU(J) + 0.5*DD(99)*(ES(12) - ES(13))*(YS(12) + YS(13))31002020
2191          BU(K+1) = BU(K) + 0.5*DS(12)*(ES(12) - ES(13))*                31002030
2192         * (BU(J) + BU(J+1))/COS(DC(M)/57.3)                             31002040
2193          BU(L+1) = BU(L) - 0.5*DD(99)*(ES(12) - ES(13))*                31002050
2194         * (YS(12)*DX(12) + YS(13)*DX(13))                               31002060
2195          IF(NT-2)100,110,111                                            31002070
2196      102 IF(DD(5))103,120,103                                           31002080
2197      103 DS(19)=DC(101)/DS(12)                                          31002090
2198          DS(16)=DC(100)/DS(12)                                          31002100
2199          NT=2                                                           31002110
2200          IF(IO(52))9011,9011,9012
```

```
CARD NO   ****                          CONTENTS                          ****

 2001      9511 CONTINUE
 2002           WRITE(6,104)(CPN,BB+5)                                     31001740
 2003       104 FORMAT(1H1,80X,20H** UBPAN - IP(52) ***/
 2004          1 11X,7HSTATION,10X,8HOUTB LOND,10X,8HINBD LOND,10X,8HFLAP INCR,  31001745
 2005          2 5X,3HPN,F6 3,5X,3HCF=,F6 2)                                 31001747
 2006      9512 CONTINUE
 2007           DO 107 I=1,13                                               31001750
 2008           J=I+6                                                       31001760
 2009           YS(I)=FCOSMP(BU(J),BS(19),BF(28),BF(16),BF(37),10,11,,5)    31001765
 2010           YB(I)=FCOSMP(BU(J),BS(18),BF(28),BF(16),BF(37),10,11, 5)    31001766
 2011           IF(IB(52))9513,9513,9514
 2012      9513 CONTINUE
 2013           WRITE(6,105)(ES(I),YS(I),YB(I))                             31001770
 2014       105 FORMAT(1H F17.5,F10.5,F10 5)                                31001775
 2015      9514 CONTINUE
 2016           YS(I)=YS(I)-YB(I)                                           31001780
 2017           IF(IB(52))9515,9515,9516
 2018      9515 CONTINUE
 2019           WRITE(6,106)YS(I)                                           31001785
 2020       106 FORMAT(1H+5HF10 5)                                          31001790
 2021      9516 CONTINUE
 2022       107 CONTINUE                                                    31001792
 2023           BS(9)=0 0                                                   31001795
 2024           DO 108 I=2,12                                               31001800
 2025       108 BS(9)=BS(9)+ 5*(ES(I-1)-ES(I))*(YS(I-1)+YS(I))              31001810
 2026           BD(00) = 0.5*(ES(12) - ES(13))*(YS(12) + YS(13))            31001811
 2027           BS(9) = BS(9) + BD(00)*BD(00)                               31001812
 2028           BD(00) = BS(9) + (1.0 - BD(00))*BD(00)                      31001813
 2029           BU(8)=BS(9)                                                 31001820
 2030           BS(10)=CODIMP(BC(102),BF(1),BF(6),5, 5)                     31001830
 2031           J=00                                                        31001840
 2032           K=02                                                        31001850
 2033           L=05                                                        31001860
 2034           GO TO 70                                                    31001870
 2035       109 I=2                                                         31001880
 2036           J=0                                                         31001890
 2037           K=02                                                        31001900
 2038           L=6                                                         31001910
 2039           GO TO 114                                                   31001920
 2040       110 I=02                                                        31001930
 2041           J=0                                                         31001940
 2042           K=00                                                        31001950
 2043           L=00                                                        31001960
 2044           GO TO 114                                                   31001970
 2045       111 IF(NT-5)112,113,113                                         31001980
 2046       112 I=109                                                       31001990
 2047           J=119                                                       31002000
 2048           K=120                                                       31002010
 2049           L=112                                                       31002020
 2050           GO TO 114                                                   31002030
 2051       113 I=108                                                       31002040
 2052           J=174                                                       31002050
 2053           K=107                                                       31002060
 2054           L=171                                                       31002070
 2055       114 BU(I)=CODIMP(BS(14),BU(J),BU(K),.13, 5)                     31002080
 2056           BU(L)=CODIMP(BS(14),BU(J),BU(K+13),.13, 5)                  31002090
 2057           BU(L+2)=CODIMP(BS(14),BU(J),BU(K+26),.13,.5)                31002095
 2058           BU(L+1)=BU(L)*COS(BC(N)/57 3)+BU(L+2)*SIN(BC(N)/57 3)       31002100
 2059           BU(L+2)=BU(L+2)*COS(BC(N)/57 3)-BU(L)*SIN(BC(N)/57 3)       31002105
 2060           BU(L)=BU(I)                                                 31002110
 2061           IF(NT-2)115,116,116
 2062       115 I=3                                                         31002130
 2063           K=47                                                        31002150
 2064           GO TO 117                                                   31002160
 2065       116 I=63                                                        31002170
 2066           K=54                                                        31002175
 2067       117 IF(IP)119,118,119                                           31002180
 2068       118 J=70                                                        31002185
 2069           GO TO 120                                                   31002190
 2070       119 J=30                                                        31002195
 2071       120 BU(I)=BS(13)+BU(I)*(1/BU(I+3))                              31002200
```

```
CARD NO    ****                          CONTENTS                          ****

2070          BU(I+1)= BS(1)*BC(J+10)+BS(13)*TAN(BC(J)/57.3)-BU(I+6)/BU(I+3)   31002210
2071          BU(I+2)=(BS(1)*BC(J+10)-BU(I+13)*COS(BC(J)/57.3)+BU(I+6)*SIN(BC(J)/31002220
2072         157.3)-BU(I+1)*BU(I+3))/(1.0-BU(I+3))                             31002221
2073          IF(NF)121,121,130                                                31002225
2074      121 CONTINUE                                                         31002230
2075          GO TO (102,103,104,105,106),NT                                   31002240
2076      102 IF(ND(24))123,123,127                                            31002250
2077      123 IF(ND(27))130,130,127                                            31002255
2078      104 BU(110)=BU(193)*COS(BC(106)/57.3)+BU(106)*SIN(BC(106)/57.3)      31002270
2079          BU(111)=BS(1)*BC(120)-BU(106)*COS(BC(106)/57.3)+BU(193)*SIN(BC(10)31002275
2080         106)/57.3)                                                        31002276
2081          IF(ND(23))130,130,127                                            31002280
2082      105 BU(108)=BU(212)*COS(BC(130)/57.3)+BU(205)*SIN(BC(130)/57.3)      31002290
2083          BU(109)=BS(1)*BC(197)-BU(205)*COS(BC(130)/57.3)+BU(212)*SIN(BC(13)31002295
2084         130)/57.3)                                                        31002296
2085          GO TO 130                                                        31002300
2086      106 NT=3                                                             31002310
2087          GO TO 2                                                          31002320
2088      127 IF(VT-6.0)120,120,120                                            31002330
2089      100 NT=4                                                             31002340
2090          GO TO 2                                                          31002350
2091      120 NT=5                                                             31002360
2092          GO TO 2                                                          31002370
2093      130 IF(ND(32))9017,9017,9010
2094     9017 IF(ND(23))131,131,134
2095      131 IF(ND(25))132,132,134                                            31002374
2096      132 IF(ND(26))133,133,143                                            31002376
2097      133 IF(ND(27))140,140,140                                            31002378
2098      134 CONTINUE
2099          WRITE(6,135)(BU(I),I=1,81),CHN
2100      135 FORMAT(1H1,6X,19HWING PARAMETERS,60X,20H** UBPAN - (P(52) **     31002380
2101         1 //7X,4HCLA=,F8.5,4X,7HGM(B)A=,F7.5,4X,7HYM(B)A=,F7.2,4X,        31002390
2102         2 8HDM(B)A=,F8.2,4X,8HDB(B)M(A=,F8.2//7X,18HSIDE OF BODY UNITS,// 31002400
2103         3 7X,8HUZ(B)=,F8.5,4X,8HUP(B)=,F8.3,4X,8HUPW(B)=,F8.3//7X,        31002410
2104         4 27HSPANWISE UNIT DISTRIBUTIONS//6X,3HSTA,7X,7HUZ(W)(B),4X,      31002420
2105         5 7HUP(W)(B),4X,7HUPW(W)(B),5X,3HDD=,F8.3/6X,9HSWEEP,10X,9HSWEEP, 31002421
2106         6 6X,9HSWEEP//)                                                   31002430
2107          DO 139 I=0,21                                                    31002440
2108          J=I+13                                                           31002450
2109          K=I+26                                                           31002460
2110          L=I+39                                                           31002470
2111      139 WRITE(6,137)(BU(I),BU(J),BU(K),BU(L))                            31002480
2112      137 FORMAT(1H 6F7.4,F12.5,3F11.3)                                    31002490
2113          IF(NF)138,138,140                                                31002495
2114      138 IF(ND(5))139,142,139                                             31002500
2115      139 WRITE(6,140)(BU(I),I=81,88),CHN                                  31002505
2116      140 FORMAT(1H1,6X,20HFLAPS DEFLECTED PARAMETERS,57X,                 31002510
2117         1 20H** UBPAN - (P(52) **//7X,4HCLF=,F8.5,4X,7HGM(B)F=,F7.5,4X,   31002515
2118         2 7HYM(B)F=,F7.2,4X,8HDM(B)F=,F8.2,4X,8HDB(B)M(F=,F8.2//7X,       31002520
2119         3 18HSIDE OF BODY UNITS//7X,8HUZ(B)=,F8.5,4X,8HUP(B)=,F8.3,4X,    31002525
2120         4 8HUPW(B)=,F8.3//7X,27HSPANWISE UNIT DISTRIBUTIONS//6X,3HSTA,7X, 31002530
2121         5 7HUZ(W)(B),4X,7HUP(W)(B),4X,7HUPW(W)(B),5X,3HDD=,F8.3/6X,9HSWEEP,10X,31002540
2122         6 9HSWEEP,6X,9HSWEEP//)                                           31002550
2123          DO 141 I=0,21                                                    31002560
2124          J=I+68                                                           31002570
2125          K=J+13                                                           31002580
2126          L=K+13                                                           31002590
2127      141 WRITE(6,137)(BU(I),BU(J),BU(K),BU(L))                            31002600
2128      142 IF(ND(23))132,132,143                                            31002605
2129      143 WRITE(6,144)(BU(I),I=100,114),CHN                                31002610
2130      144 FORMAT(1H1,6X,19HOR TAIL PARAMETERS,64X,20H** UBPAN - (P(52) **//31002620
2131         1 7X,4HCLA=,F8.5,4X,8HDM(B)A=,F7.5,4X,3HYM=,F7.2,4X,4HDM=,F8.2//7X,31002625
2132         2 18HSIDE OF BODY UNITS//7X,8HUZ(B)=,F8.5,4X,8HUP(B)=,F8.3,4X,    31002630
2133         3 8HUPW(B)=,F8.3//7X,27HSPANWISE UNIT DISTRIBUTIONS//6X,3HSTA,7X, 31002640
2134         4 7HUZ(W)(B),4X,7HUP(W)(B),4X,7HUPW(W)(B),5X,3HDD=,F8.3/6X,9HSWEEP,10X,31002650
2135         5 9HSWEEP,6X,9HSWEEP//)                                           31002660
2136          DO 145 I=115,127                                                 31002680
2137          J=I+13                                                           31002690
2138          K=J+13                                                           31002700
2139          L=K+13                                                           31002710
2140      145 WRITE(6,137)(BU(I),BU(J),BU(K),BU(L))                            31002720
```

CARD NO **** CONTENTS ****

```
      IF(ND(23))133,133,146                                            31002700
  146 WRITE(6,147)(BU(I),I=167,173),CMN                                31002710
  147 FORMAT(1H1,6X,20HCERT TAIL PARAMETERS,63X,20H** USPAN - IP(52) **/31002720
     1 //4,4HCYB=,F8.5,4X,6HCVIB)=,F7.5,4X,4HDZV=,F7.2,4X,4HDXV=,F8.2// 31002725
     2 7X,17HTOP OF BODY UNITS//7X,6HUSYVB=,F8.5,4X,6HUPXVB=,F8.3,4X,  31002730
     3 6HUPZVB=,F8.3//7X,27HSPANWISE UNIT DISTRIBUTIONS//8X,3HETA,7X,  31002740
     4 7HUSYV(I),5X,7HUPXV(I),5X,7HUPZV(I),5X,3HDM=,F8.3/8X,5HSWEEP,10X,31002750
     5 5HSWEEP,6X,5HSWEEP//)                                           31002755
      DO 146 I=174,186                                                 31002760
      J=I+13                                                           31002770
      K=J+13                                                           31002780
      L=K+13                                                           31002790
  146 WRITE(6,137)BU(I),BU(J),BU(K),BU(L)                              31002800
 5010 CONTINUE
  146 RETURN                                                           31002810
      END                                                              31002820
C
C ((((((((((((((((((((((((((((((((((((((((((((((((((((((((((((((((((((((
C                         SUBROUTINE HNNET
C ))))))))))))))))))))))))))))))))))))))))))))))))))))))))))))))))))))))
C
      SUBROUTINE HNNET
C
C        SUBROUTINE TO ARRANGE SURFACE AIRLOADS DATA AND
C        NORMALIZING FACTORS
C
      COMMON TCON(4400),WLD(300),IDUM(132),SAVE(132),HNET(132),
     * RNZ(132),BL(44),SVF(180),STEMPM(23),STEMPH(23),STEMPV(23),
     * DUM(180),SAVET(88)
C
      COMMON /IPRINT/IP(80)
      COMMON /MISC/ XMISC(100)
C
      DIMENSION         RATIO(204),RS(132)
      DIMENSION ND(200)
      DIMENSION TSKINF(23)
C
      EQUIVALENCE (ND(1),TCON(4201))
      EQUIVALENCE (SVF(116),TSKINF(1)),(SVF(152),SDEM)
C
C     **** READ RECORD 32. THE WING, HORIZONTAL AND VERTICAL LOADS ****
C*****CCCCC*****
      CALL READMS(1,DUM(1),180,32)
C*****CCCCC*****
C
C     **** READ RECORD 17. THE DEAD WEIGHT RATIOS ****
C     ****      (INITIALIZED AT 1.0 IN READ)        ****
C*****CCCCC*****
      CALL READMS(1,RATIO(1),204,17)
C*****CCCCC*****
C
C     CLEAR LOADS WHICH ARE TO BE COMPUTED
C
      IF(ND(23))4005,4005,4001
C
 4001 L1 = 1
C
C*****CCCCC*****
      L2 = 180
C*****CCCCC*****
      IND = 1
      GO TO 4010
C
 4005 IF(ND(25))4006,4006,4002
C
 4002 L1 = 1
      L2 = 44
C*****CCCCC*****
      DO 4012 N=1,22
 4012 DUM(N+132) = 0.0
C*****CCCCC*****
```

CARD NO **** CONTENTS ****

```
      IND = 2
      GO TO 4010
C
 4005 IF(IND(20))4007,4007,4003
C
 4003 L1 = 45
      L2 = 88
C*****CCCCC*****
      DO 4013 N=1,22
 4013 DUM(N+15) = 0.0
C*****CCCCC*****
      IND = 3
      GO TO 4010
C
 4007 IF(IND(27))4020,4020,4004
C
 4004 L1 = 88
      L2 = 132
C******CCCCCC******
      DO 4014 N=1,22
 4014 DUM(N+176) = 0.0
C*****CCCCC*****
      IND = 4
C
 4010 DO 4011 N=L1,L2
 4011 DUM(N) = 0.0
C
      GO TO(4020,4005,4007,4020),IND
C
 4020 CONTINUE
C
C        IF THE NEGATIVE BENDING MOMENT AT THE ROOT OF THE HORIZONTAL
C        TAIL IS GREATER THAN THE POSITIVE BENDING MOMENT, REVERSE THE
C        HORIZONTAL TAIL POSITIVE AND NEGATIVE AIRLOADS (ARRAY DUM IN
C        RECORD 22) AND THE RATIOS (ARRAY RATIO IN RECORD 17)
C
      XHISC(42) = 0.0
C
      IF(ND(20))402,402,400
C
 400 IF(  XMET(77) +   XMET(88))401,402,402
C
 401  XHISC(42) = 1.0
C
      DO 403 N=45,55
C
      RSSAVE = RS(N)
      RS(N) = RS(N+11)
      RS(N+11) = RSSAVE
C
      RSSAVE = RS(N+22)
      RS(N+22) = RS(N+33)
      RS(N+33) = RSSAVE
C
      RMESAV = RME(N)
      RME(N) = RME(N+11)
      RME(N+11) = RMESAV
C
      RMESAV = RME(N+22)
      RME(N+22) = RME(N+33)
      RME(N+33) = RMESAV
C
      RATIOS = RATIO(N)
      RATIO(N) = RATIO(N+11)
      RATIO(N+11) = RATIOS
C
      RATIOS = RATIO(N+22)
      RATIO(N+22) = RATIO(N+33)
      RATIO(N+33) = RATIOS
C
      SAMESV = SAME(N)
```

```
CARD NO   ****                                  CONTENTS                                  ****

2404            SAVE(N) = -SAVE(N+11)
2405            SAVE(N+11) = -SAVESV
2407      C
2408            SAVESV = SAVE(N+22)
2408            SAVE(N+22) = -SAVE(N+33)
2408            SAVE(N+33) = -SAVESV
2401      C
2402            SAVEDN = BUPH(N)
2403            BUPH(N) = -BUPH(N+11)
2404            BUPH(N+11) = -SAVEDN
2405      C
2405            SAVEDN = BUPH(N+22)
2407            BUPH(N+22) = -BUPH(N+33)
2408            BUPH(N+33) = -SAVEDN
2409      C
2500            IDDN = IBUPH(N)
2501            IBUPH(N) = IBUPH(N+11)
2502            IBUPH(N+11) = IDDN
2503      C
2504            IDDN = IBUPH(N+22)
2505            IBUPH(N+22) = IBUPH(N+33)
2506        405 IBUPH(N+33) = IDDN
2507      C*****CCCCC*****
2508      C
2509      C           *** T. MOM ***
2510            DO 4030 N =1,11
2511            SAVETN = SAVET(N+22)
2512            SAVET(N+22) = SAVET(N+33)
2513       4030 SAVET(N+33) = SAVETN
2514      C
2515      C*****CCCCC*****
2516      C
2517        402 CONTINUE
2518      C
2519      C     **** DETERMINE THE DESIGN LOAD CONDITIONS FOR THE WING,  ****
2520      C     **** HORIZONTAL TAIL AND VERTICAL TAIL (W, H, V)         ****
2521      C     **** THE DESIGN CONDITION IS THE CONDITION WHICH GIVES   ****
2522      C     **** THE MAXIMUM POSITIVE BENDING MOMENT AT THE ROOT     ****
2523      C
2524      C     **** DETERMINE THE STRESS LEVEL AT THE DESIGN CONDITION  ****
2525      C     **** (STRW,STRH,STRV) AND THE TEMPERATURE AT THE DESIGN  ****
2526      C     **** CONDITION (TWING,THT,TVT) FOR THE WING, HORIZONTAL  ****
2527      C     **** AND VERTICAL                                        ****
2528      C
2529            IF(ND(25)).405,405,402
2530      C
2531        402 IN = IBUPH(33)
2532            STRW = STEMPW(IN)
2533            TWING = TSKINF(IN)
2534            XMISC(8) = TWING
2535      C
2536            DO 404 N=1,44
2537            II = IBUPH(N)
2538            IF(II - 24)200,207,207
2539        207 IF(DDDH)210,210,200
2540      C
2541        200 RS(N) = STRW / DDDH
2542            GO TO 213
2543        200 IF(II)210,210,214
2544        214 IF(XMISC(15))210,210,211
2545        211 IF(STEMPW(II))210,210,212
2546        210 RS(N) = 1.0
2547            GO TO 213
2548        212 RS(N) = STRW / STEMPW(II)
2549        213 BUPH(N) = SAVE(N) * RS(N)
2550            RATIO(N) = RS(N) * RZ(N)
2551        404 RATIO(N+132) = RATIO(N) * RC(N)
2552      C*****CCCCC*****
2553      C
2554            DO 4040 N=1,22
2555            BUPH(N+132) = SAVET(N)*RS(N+22)
```

```
      RATIO(N+242) = RATIO(N+154)
 4040 RATIO(N+176) = RATIO(N+22)
C
C*****CCCCC*****
C
  405 IF(ND(25))410,410,407
C
  407 IN = IBUN(77)
      TNT   = TSKINF(IN)
      STRN = STEMPN(IN)
      XMISC(9) = TNT
C
      DO 400 N=40,80
      II = IBUN(N)
      IF(II)200,200,215
  215 IF(XMISC(19))200,200,221
  221 IF(STEMPN(II))200,200,222
  200 RS(N) = 1.0
      GO TO 223
  222 RS(N) = STRN / STEMPN(II)
  223 BUN(N) = SAVE(N) * RS(N)
  400 RATIO(N) = RS(N) * RNZ(N)
C*****CCCCC*****
C
      DO 4000 N=1,22
      BUN(N+154) = SAVET(N+22)*RS(N+66)
 4000 RATIO(N+158) = RATIO(N+66)
C
C*****CCCCC*****
C
  410 IF(ND(27))420,420,412
C
  412 IV = IBUN(121)
      STRV = STEMPV(IV)
      TVT   = TSKINF(IV)
      XMISC(10)= TVT
C
      DO 414 N=80,132
      II = IBUN(N)
      IF(II)230,230,216
  216 IF(XMISC(23))230,230,231
  231 IF(STEMPV(II))230,230,232
  230 RS(N) = 1.0
      GO TO 233
  232 RS(N) = STRV / STEMPV(II)
  233 BUN(N) = SAVE(N) * RS(N)
  414 RATIO(N) = RS(N) * RNZ(N)
C*****CCCCC*****
C
      DO 4140 N=1,22
      BUN(N+176) = SAVET(N+44)*RS(N+110)
 4140 RATIO(N+220) = RATIO(N+110)
C
C*****CCCCC*****
  420 CONTINUE
C
      IF(IP(53))5501,5501,5502
 5501 CONTINUE
C
C     **** PRINT THE DESIGN LOADS AND LOAD CONDITIONS FOR THE ****
C     **** WING, HT AND VT WHEN THE LOADS HAVE BEEN COMPUTED  ****
C
      IF(ND(25))455,455,452
C
  452 WRITE(6,344)
  344 FORMAT(1H1,25X,55H*** DESIGN LOADS (RECORD 32) AND RATIOS (RECORD
     *17) ***,8X,21H** WARNET - IP(53) **/)
C
      WRITE(6,340)
  340 FORMAT(40X,15H* * * W I N G * * *)
C
```

CARD NO **** CONTENTS ****

```
      WRITE(6,351)
  351 FORMAT(/22X,8HSTATION  LC        +V         RS     RNZ      RC
     *   RS*(+V)   RS*RNZ  RS*RNZ*RC/)
C
      WRITE(6,355)(N,IDUM(N),SAVE(N),RS(N),RNZ(N),RC(N),DUM(N),RATIO(N),
     *  RATIO(N+132),N=1,11)
C
  355 FORMAT(24X,I2,5X,I2,F13.0,F9.3,2F9.3,F13.0,F9.3,F9.3)
C
      WRITE(6,352)
  352 FORMAT(/22X,8HSTATION  LC        -V         RS     RNZ      RC
     *   RS*(-V)   RS*RNZ  RS*RNZ*RC/)
C
      WRITE(6,355)(N,IDUM(N+11),SAVE(N+11),RS(N+11),RNZ(N+11),RC(N+11),
     *  DUM(N+11),RATIO(N+11),RATIO(N+143),N=1,11)
C
      WRITE(6,353)
  353 FORMAT(/22X,8HSTATION  LC        +BM        RS     RNZ      RC
     *   RS*(+BM)  RS*RNZ  RS*RNZ*RC/)
C
      WRITE(6,355)(N,IDUM(N+22),SAVE(N+22),RS(N+22),RNZ(N+22),RC(N+22),
     *  DUM(N+22),RATIO(N+22),RATIO(N+154),N=1,11)
C
      WRITE(6,354)
  354 FORMAT(/22X,8HSTATION  LC        -BM        RS     RNZ      RC
     *   RS*(-BM)  RS*RNZ  RS*RNZ*RC/)
C
      WRITE(6,355)(N,IDUM(N+33),SAVE(N+33),RS(N+33),RNZ(N+33),RC(N+33),
     *  DUM(N+33),RATIO(N+33),RATIO(N+165),N=1,11)
C
  405 IF(ND(26))405,405,402
C
  402 WRITE(6,344)
C
      WRITE(6,342)
  342 FORMAT(38X,23H*** HORIZONTAL TAIL ***)
C
      WRITE(6,351)
  351 FORMAT(/22X,62HSTATION  LC        +V         RS     RNZ      RS*(+
     *V)   RS*RNZ/)
C
      WRITE(6,355)(N,IDUM(N+44),SAVE(N+44),RS(N+44),RNZ(N+44),
     *   DUM(N+44),RATIO(N+44),N=1,11)
C
  355 FORMAT(24X,I2,5X,I2,F13.0,F9.3,F9.3,F13.0,F9.3)
C
      WRITE(6,352)
  352 FORMAT(/22X,62HSTATION  LC        -V         RS     RNZ      RS*(-
     *V)   RS*RNZ/)
C
      WRITE(6,355)(N,IDUM(N+55),SAVE(N+55),RS(N+55),RNZ(N+55),
     *   DUM(N+55),RATIO(N+55),N=1,11)
C
      WRITE(6,353)
  353 FORMAT(/22X,62HSTATION  LC        +BM        RS     RNZ      RS*(+
     *BM)  RS*RNZ/)
C
      WRITE(6,355)(N,IDUM(N+66),SAVE(N+66),RS(N+66),RNZ(N+66),
     *   DUM(N+66),RATIO(N+66),N=1,11)
C
      WRITE(6,354)
  354 FORMAT(/22X,62HSTATION  LC        -BM        RS     RNZ      RS*(-
     *BM)  RS*RNZ/)
C
      WRITE(6,355)(N,IDUM(N+77),SAVE(N+77),RS(N+77),RNZ(N+77),
     *   DUM(N+77),RATIO(N+77),N=1,11)
C
  404 IF(XMISC(42))405,405,406
C
  406 WRITE(6,407)
  407 FORMAT(/17X,73HTHE POSITIVE AND NEGATIVE LOADS ON THE HORIZONTAL T
```

```
CARD NO    ****                          CONTENTS                          ****

                *AIL HAVE BEEN REVERSED/14X,60HBECAUSE THE NEGATIVE BM AT THE ROOT
                *WAS GREATER THAN THE POSITIVE BM AT THE ROOT)
          C
            405 IF(ND(27))5002,5002,472
          C
            472 WRITE(6,344)
          C
                WRITE(6,343)
            343 FORMAT(30X,21H*** VERTICAL TAIL ***)
          C
                WRITE(6,351)
          C
                WRITE(6,355)(N,IDUM(N+88),SAVE(N+88),RS(N+88),RNZ(N+88),
               *   DUM(N+88),RATIO(N+88),N=1,11)
          C
                WRITE(6,352)
          C
                WRITE(6,355)(N,IDUM(N+99),SAVE(N+99),RS(N+99),RNZ(N+99),
               *   DUM(N+99),RATIO(N+99),N=1,11)
          C
                WRITE(6,353)
          C
                WRITE(6,355)(N,IDUM(N+110),SAVE(N+110),RS(N+110),RNZ(N+110),
               *   DUM(N+110),RATIO(N+110),N=1,11)
          C
                WRITE(6,354)
          C
                WRITE(6,355)(N,IDUM(N+121),SAVE(N+121),RS(N+121),RNZ(N+121),
               *   DUM(N+121),RATIO(N+121),N=1,11)
          C
           5002 CONTINUE
          C
          C     **** WRITE THE WING, HT AND VT LOADS IN RECORD 32  ****
          C     **** AND WRITE THE DEAD WEIGHT RATIOS ON RECORD 17 ****
          C     **** IF ANY OF THE LOADS HAVE BEEN COMPUTED        ****
          C
                IF(ND(23))3001,3001,3004
           3001 IF(ND(25))3002,3002,3004
           3002 IF(ND(26))3003,3003,3004
           3003 IF(ND(27))3005,3005,3004
          C
          C*****CCCCC*****
           3004 CALL WRITMS(1,DUM(1),150,32)
                CALL WRITMS(1,RATIO(1),204,17)
          C*****CCCCC*****
           3005 CONTINUE
                RETURN
                END
```

## Appendix B

## SAMPLE OUTPUT

Sample airload module output are shown in Figures B-1 through B-25. Print control indicators and originating routine name appear in the output samples.

```
                                                                                    ** USPAN - IP(52) **
   VALUES FROM BCLA/K TABLES FOR AR=  9.6000   SWB= 12.94   TR= 0.3500   BA/K= 10.0036
TR=       0.0        0.25       0.50       1.00
      0.09438    0.08651    0.08526    0.08119    (WING)
   VALUES FROM LOADING TABLES FOR MN= 0.318
      1.53218    1.32894    1.21470    1.04169    STA= 0.0
      1.26499    1.17613    1.14092    1.11271    STA= 0.383
      0.73471    0.86268    0.93744    1.04151    STA= 0.707
      0.24414    0.50330    0.60127    0.69093    STA= 0.924
```

Figure B-1. Sample output from USPAN of wing lift curve slope parameter and spanwise loading parameter.

```
STATION          LOADING AT DATA STATIONS      MN= 0.318                    ** USPAN - IP(52) **
0.0              1.27901
0.38300          1.15901
0.70700          0.89577
0.92400          0.55048
1.00000          0.0

STATION          LOADING-ANALYSIS STATIONS (WING)
1.00000          0.0
0.97737          0.17758
0.90949          0.60456
0.81897          0.74999
0.72846          0.86827
0.63795          0.97262
0.54744          1.05040
0.45693          1.11372
0.36642          1.16837
0.27590          1.20887
0.18539          1.23799
0.09488          1.26030
0.0              1.27901

STATION          DX SWEEP
1.00000           -9.852
0.97737          -10.266
0.90949          -11.508
0.81897          -13.164
0.72846          -14.820
0.63795          -16.476
0.54744          -18.132
0.45693          -19.788
0.36642          -21.444
0.27590          -23.100
0.18539          -24.756
0.09488          -26.412
0.0               -4.879
```

Figure B-2. Sample output from USPAN of wing spanwise loading parameter and local center of pressure at load evaluation stations.

** USPAN - IP(52) **

MN= 0.318 DF= 30.00

| STATION | OUTB LDNG | INBD LDNG | FLAP INCR |
|---|---|---|---|
| 1.00000 | 0.0 | 0.0 | 0.0 |
| 0.97737 | 0.06278 | 0.01386 | 0.04892 |
| 0.90949 | 0.24822 | 0.05030 | 0.19791 |
| 0.81897 | 0.48070 | 0.07124 | 0.40946 |
| 0.72846 | 0.71740 | 0.09669 | 0.62071 |
| 0.63795 | 0.88693 | 0.13111 | 0.75582 |
| 0.54744 | 0.99940 | 0.17987 | 0.81952 |
| 0.45693 | 1.08007 | 0.23407 | 0.84600 |
| 0.36642 | 1.13946 | 0.29832 | 0.84114 |
| 0.27590 | 1.18983 | 0.41185 | 0.77798 |
| 0.18539 | 1.22320 | 0.61159 | 0.61161 |
| 0.09488 | 1.23994 | 0.81019 | 0.42975 |
| 0.0 | 1.23953 | 0.81140 | 0.42813 |

| STATION | DX SWEEP |
|---|---|
| 1.00000 | 6.560 |
| 0.97737 | 6.836 |
| 0.90949 | 7.663 |
| 0.81897 | 8.766 |
| 0.72846 | 9.869 |
| 0.63795 | 10.971 |
| 0.54744 | 12.074 |
| 0.45693 | 13.177 |
| 0.36642 | 14.280 |
| 0.27590 | 15.383 |
| 0.18539 | 16.485 |
| 0.09488 | 17.588 |
| 0.0 | 39.171 |

Figure B-3. Sample output from USPAN of deflected flap spanwise loading parameter and local center of pressure at load evaluation stations.

```
                                                                                    ** USPAN - IP(52) **
   VALUES FROM BCLA/K TABLES FOR AR=  2.0000   SWB= 37.73   TR= 0.5000   RA/K=  2.0841
TR=      0.0       0.25      0.50      1.00
      0.04268   0.04315   0.04220   0.03980   (HOR TAIL)
   VALUES FROM LOADING TABLES FOR MN= 0.318
      1.32855   1.26743   1.23203   1.16170   STA= 0.0
      1.20663   1.18044   1.17246   1.16334   STA= 0.383
      0.86047   0.90957   0.92676   0.96722   STA= 0.707
      0.40948   0.49930   0.51510   0.54820   STA= 0.924
```

Figure B-4. Sample output from USPAN of horizontal tail lift curve slope parameter and spanwise loading parameter.

```
STATION          LOADING AT DATA STATIONS      MN= 0.318                    ** USPAN - IP(52) **
0.0              1.23203
0.38300          1.17246
0.70700          0.92676
0.92400          0.51510
1.00000          0.0

STATION          LOADING-ANALYSIS STATIONS (HOR TAIL)
1.00000          0.0
0.97500          0.18215
0.90000          0.60436
0.80000          0.78914
0.70000          0.93660
0.60000          1.04091
0.50000          1.11003
0.40000          1.16416
0.30000          1.20282
0.20000          1.22204
0.10000          1.23035
0.0              1.23203
0.0              1.23203

STATION          DX SWEEP
1.00000          -18.688
0.97500          -19.155
0.90000          -20.557
0.80000          -22.425
0.70000          -24.294
0.60000          -26.163
0.50000          -28.032
0.40000          -29.900
0.30000          -31.769
0.20000          -33.638
0.10000          -35.507
0.0              -37.376
0.0              -37.376
```

Figure B-5. Sample output from USPAN of horizontal tail spanwise loading parameter and local center of pressure at load evaluation stations.

```
                                                                                  ** USPAN - IP(52) **
   VALUES FROM BCLA/K TABLES FOR AR=  1.7761   SWB= 57.59   TR= 0.4056   BA/K=  1.8507
TR=       0.0        0.25       0.50       1.00
      0.03581    0.03528    0.03400    0.03152   (VERT TAIL)
   VALUES FROM LOADING TABLES FOR MN= 0.318
      1.30547    1.22059    1.16836    1.06486   STA= 0.0
      1.20517    1.17735    1.16165    1.15456   STA= 0.383
      0.86887    0.93583    0.96552    1.02152   STA= 0.707
      0.43151    0.52829    0.54977    0.58920   STA= 0.924
```

Figure B-6. Sample output from USPAN of vertical tail lift curve slope parameter and spanwise loading parameter.

| STATION | LOADING AT DATA STATIONS MN= 0.318 | ** USPAN - IP(52) ** |
|---|---|---|
| 0.0 | 1.18802 | |
| 0.38300 | 1.16649 | |
| 0.70700 | 0.95452 | |
| 0.92400 | 0.54188 | |
| 1.01000 | 0.0 | |

| STATION | LOADING-ANALYSIS STATIONS (VERT TAIL) |
|---|---|
| 1.00000 | 0.0 |
| 1.01000 | 0.0 |
| 0.94336 | 0.41943 |
| 0.88672 | 0.66816 |
| 0.83009 | 0.77313 |
| 0.77345 | 0.85962 |
| 0.71681 | 0.94074 |
| 0.66017 | 1.00911 |
| 0.60353 | 1.05612 |
| 0.54690 | 1.09192 |
| 0.49026 | 1.12119 |
| 0.43301 | 1.14662 |
| 0.0 | 1.18802 |

| STATION | DX SWEEP |
|---|---|
| 1.01000 | -26.818 |
| 1.00000 | -26.818 |
| 0.94336 | -29.043 |
| 0.88672 | -31.269 |
| 0.83009 | -33.495 |
| 0.77345 | -35.721 |
| 0.71681 | -37.947 |
| 0.66017 | -40.173 |
| 0.60353 | -42.399 |
| 0.54690 | -44.624 |
| 0.49026 | -46.850 |
| 0.43301 | -49.100 |
| 0.0 | 52.599 |

Figure B-7. Sample output from USPAN of vertical tail spanwise loading parameter and local center of pressure at load evaluation stations.

WING PARAMETERS ** USPAN - IP(52) **

CLA= 4.73664 KW(B)A=0.87844 YW(B)A= 592.13 DXW(B)A= 243.58 DXB(W)A= 147.94

SIDE OF BODY UNITS

USZWB= 0.87844 UMXWB= 417.379 UMYWB= -60.949

SPANWISE UNIT DISTRIBUTIONS

| STA SWEEP | USZW(B) | UMXW(B) SWEEP | UMYW(B) SWEEP | MN= 0.318 |
|---|---|---|---|---|
| 1.0000 | 0.0 | 0.0 | 0.0 | |
| 0.9774 | 0.00203 | 0.029 | 0.021 | |
| 0.9095 | 0.07882 | 1.342 | 0.322 | |
| 0.8190 | 0.09067 | 8.127 | 1.090 | |
| 0.7285 | 0.16457 | 22.620 | 2.129 | |
| 0.6380 | 0.24964 | 46.083 | 3.448 | |
| 0.5474 | 0.34102 | 79.565 | 5.049 | |
| 0.4569 | 0.43985 | 123.904 | 6.926 | |
| 0.3664 | 0.54406 | 179.772 | 9.076 | |
| 0.2759 | 0.65262 | 247.721 | 11.495 | |
| 0.1854 | 0.76436 | 328.179 | 14.170 | |
| 0.0949 | 0.87844 | 421.459 | 17.090 | |
| 0.0 | 1.00000 | 533.267 | 18.979 | |

Figure B-8. Sample output from USPAN of wing lift curve slope, center of pressure, and unit spanwise loads.

FLAPS DEFLECTED PARAMETERS ** USPAN - IP(52) **

KRF= 0.59234 KW(R)F=0.93129 YW(R)F= 594.52 DXW(R)F= 276.91 DXB(W)F= 191.09

SIDE OF BODY UNITS

USZFR= 0.93129 UMXFR= 444.712 UMYFR= -95.654

SPANWISE UNIT DISTRIBUTIONS

| STA SWEEP | USZF(R) | UMXF(R) SWEEP | UMYF(R) SWEEP | MN= 0.318 |
|---|---|---|---|---|
| 1.0000 | 0.0 | 0.0 | 0.0 | |
| 0.9774 | 0.00093 | 0.013 | -0.006 | |
| 0.9095 | 0.01508 | 0.695 | -0.112 | |
| 0.8190 | 0.06148 | 5.042 | -0.503 | |
| 0.7285 | 0.14019 | 16.494 | -1.245 | |
| 0.6380 | 0.24536 | 38.385 | -2.346 | |
| 0.5474 | 0.36572 | 73.083 | -3.736 | |
| 0.4569 | 0.49296 | 121.840 | -5.344 | |
| 0.3664 | 0.62186 | 185.142 | -7.113 | |
| 0.2759 | 0.74557 | 262.786 | -8.945 | |
| 0.1854 | 0.85173 | 353.493 | -10.630 | |
| 0.0949 | 0.93129 | 454.726 | -11.977 | |
| 0.0 | 1.00000 | 569.679 | -13.926 | |

Figure B-9. Sample output from USPAN of deflected flap lift curve clope, center of pressure, and unit spanwise loads.

HOR TAIL PARAMETERS ** USPAN - IP(52) **

CLA= 2.32056 KH(R)=1.00000 YH= 100.84 DXH= 135.20

SIDE OF BODY UNITS

USZHR= 1.00000 UMXHR= 100.845 UMYHR= -29.067

SPANWISE UNIT DISTRIBUTIONS

| STA SWEEP | USZH(R) | UMXH(R) SWEEP | UMYH(R) SWEEP | MN= 0.318 |
|---|---|---|---|---|
| 1.0000 | 0.0 | 0.0 | 0.0 | |
| 0.9750 | 0.00229 | 0.007 | 0.044 | |
| 0.9000 | 0.03199 | 0.310 | 0.645 | |
| 0.8000 | 0.10214 | 1.890 | 2.161 | |
| 0.7000 | 0.18902 | 5.319 | 4.197 | |
| 0.6000 | 0.28857 | 10.945 | 6.714 | |
| 0.5000 | 0.39685 | 19.019 | 9.651 | |
| 0.4000 | 0.51134 | 29.717 | 12.970 | |
| 0.3000 | 0.63050 | 43.167 | 16.646 | |
| 0.2000 | 0.75257 | 59.458 | 20.639 | |
| 0.1000 | 0.87604 | 78.642 | 24.908 | |
| 0.0 | 1.00000 | 100.741 | 29.426 | |
| 0.0 | 1.00000 | 100.741 | 29.426 | |

Fig. B-10. Sample output from USPAN of horizontal tail lift curve slope, center of pressure, and unit spanwise loads.

VERT TAIL PARAMETERS ** USPAN - IP(52) **

CYR= 1.89612 KV(R)=0.62286 DZV= 196.37 DXV= 501.46

TOP OF BODY UNITS

USYVR= 0.62286 UMXVR= 94.472 UMZVR= -89.641

SPANWISE UNIT DISTRIBUTIONS

| STA SWEEP | USYV(R) | UMXV(R) SWEEP | UMZV(R) SWEEP | MN= 0.318 |
|---|---|---|---|---|
| 1.0000 | 0.0 | 0.0 | 0.0 | |
| 1.0000 | 0.0 | 0.0 | 0.0 | |
| 0.9434 | 0.01202 | 0.238 | 0.349 | |
| 0.8867 | 0.04218 | 1.331 | 1.297 | |
| 0.8301 | 0.08448 | 3.860 | 2.638 | |
| 0.7734 | 0.13127 | 8.134 | 4.259 | |
| 0.7168 | 0.18286 | 14.355 | 6.162 | |
| 0.6602 | 0.23873 | 22.706 | 8.347 | |
| 0.6035 | 0.29790 | 33.335 | 10.791 | |
| 0.5469 | 0.35946 | 46.356 | 13.471 | |
| 0.4903 | 0.42287 | 61.851 | 16.372 | |
| 0.4330 | 0.48856 | 80.130 | 19.524 | |
| 0.0 | 1.00000 | 305.512 | 18.168 | |

Figure B-11. Sample output from USPAN of vertical tail lift curve slope, center of pressure, and unit spanwise loads.

```
CONDITION NO= 60825.     MN= 0.318     ALT=     0.     DF= 30.00                    ** BNLDS - IP(50) **

BODY LOADS
PZN=  28637.     PYN=     0.     XBN=  652.82

WING PANEL LOAD
PZW(B)/2=  801953.     YBW(B)= 592.98     XBW(B)= 2163.58

WING CARRY-OVER LOAD
PZB(W)= 185109.     XBB(W)= 2077.75

HORIZONTAL TAIL LOADS
PZH/2= -68826.     YBH=100.84     XBH= 3225.20     DMXH= 2082216.

VERTICAL TAIL LOAD
PYV=      0.     ZBV=  0.0     XBV= 2866.75

AIRPLANE INERTIA FACTORS
NZ=  2.00     NY=  0.0     QDOT=  0.0     RDOT=  0.0

COMPONENT SPANWISE FACTORS
PZW(B)A= 1033738.     PZW(B)F=  570167.     PZH(B)=-137651.
```

Figure B-12. Sample output from BNLDS of vehicle loads, center of pressure, and inertia factors.

WING LOADS  COND NO= 60025.  MN= 0.318  ALT=  0.  DF= 30.00  ** SPABM - IP(51) **

SOB DIST= 117.00IN  SH AT SOB= 801953.LB  BM AT SOB=381715200.IN-LB  TM AT SOB=-65142720.IN-LB

| STATION (IN) | SHEAR (LB) | BEND MOM (IN-LB) | TORS MOM (IN-LB) |
|---|---|---|---|
| 1254.67 | 0. | 0. | 0. |
| 1226.28 | 1479. | 20994. | 10291. |
| 1141.11 | 21571. | 1002612. | 154764. |
| 1027.55 | 72172. | 6325479. | 487559. |
| 913.98 | 139747. | 18358560. | 871371. |
| 800.42 | 221405. | 38865296. | 1310488. |
| 686.86 | 312606. | 69187200. | 1827445. |
| 573.29 | 409707. | 110201152. | 2439199. |
| 459.73 | 510483. | 162450896. | 3162884. |
| 346.17 | 612225. | 226199728. | 4025576. |
| 232.61 | 710470. | 301304064. | 5083688. |
| 119.04 | 801953. | 381715568. | 6388989. |

Figure B-13. Sample output from SPABM of wing airload shears, bending moments, and torques.

HORIZONTAL TAIL LOADS  COND NO= 60825.  MN= 0.318  ALT= 0.  ** SPABM - IP(51) **

SOB DIST= 0.0 IN  SH AT SOB= -79149.LB  BM AT SOB= -7981819.IN-LB  TM AT SOB= 2300645.IN-LB

| STATION (IN) | SHEAR (LB) | BEND MOM (IN-LB) | TORS MOM (IN-LB) |
|---|---|---|---|
| 235.59 | 0. | 0. | 0. |
| 229.70 | -181. | -534. | -3476. |
| 212.03 | -2532. | -24506. | -51030. |
| 188.47 | -8084. | -149560. | -171048. |
| 164.91 | -14961. | -421019. | -322228. |
| 141.35 | -22840. | -866290. | -531398. |
| 117.79 | -31410. | -1505326. | -763888. |
| 94.23 | -40472. | -2352056. | -1026575. |
| 70.68 | -49904. | -3416626. | -1317536. |
| 47.12 | -59566. | -4706107. | -1633594. |
| 23.56 | -69338. | -6224507. | -1971462. |
| 0.0 | -79149. | -7973588. | -2329016. |

Figure B-14. Sample output from SPABM of horizontal tail airload shears, bending moments, and torques.

VERTICAL TAIL LOADS  COND NO= 60825.  MN= 0.318  ALT= 0.  ** SPABM - IP(51) **

SOB DIST= 132.17IN  SH AT SOB= 0.LB  BM AT SOB= 2082216.IN-LB  TM AT SOB= 0.IN-LB

| STATION (IN) | SHEAR (LB) | BEND MOM (IN-LB) | TORS MOM (IN-LB) |
|---|---|---|---|
| 699.44 | 0. | 0. | 0. |
| 699.44 | 0. | 0. | 0. |
| 659.82 | 0. | 1238860. | 1673573. |
| 620.21 | 0. | 1238860. | 1673573. |
| 580.59 | 0. | 1238860. | 1673573. |
| 540.98 | 0. | 1238860. | 1673573. |
| 501.36 | 0. | 1238860. | 1673573. |
| 461.75 | 0. | 1238860. | 1673573. |
| 422.13 | 0. | 1238860. | 1673573. |
| 382.52 | 0. | 1238860. | 1673573. |
| 342.90 | 0. | 1238860. | 1673573. |
| 302.86 | 0. | 1238860. | 1673573. |

Figure B-15. Sample output from SPABM of vertical tail airload shears, bending moments, and torques.

*** DESIGN LOADS (RECORD 32) AND RATIOS (RECORD 17) *** ** WHVNET - IP(53) **

* * * W I N G * * *

| STATION | LC | +V | RS | RNZ | RC | RS*(+V) | RS*RNZ | RS*RNZ*RC |
|---|---|---|---|---|---|---|---|---|
| 1 | 3 | 2131. | 1.000 | 1.000 | 1.000 | 2131. | 1.000 | 1.000 |
| 2 | 3 | 32043. | 1.000 | 1.000 | 1.000 | 32043. | 1.000 | 1.000 |
| 3 | 3 | 101635. | 1.000 | 1.000 | 1.000 | 101635. | 1.000 | 1.000 |
| 4 | 3 | 180435. | 1.000 | 1.000 | 1.000 | 180435. | 1.000 | 1.000 |
| 5 | 3 | 263650. | 1.000 | 1.000 | 1.000 | 263650. | 1.000 | 1.000 |
| 6 | 3 | 350229. | 1.000 | 1.000 | 1.000 | 350229. | 1.000 | 1.000 |
| 7 | 3 | 438337. | 1.000 | 1.000 | 1.000 | 438337. | 1.000 | 1.000 |
| 8 | 3 | 526503. | 1.000 | 1.000 | 1.000 | 526503. | 1.000 | 1.000 |
| 9 | 3 | 614028. | 1.000 | 1.000 | 1.000 | 614028. | 1.000 | 1.000 |
| 10 | 5 | 834107. | 0.768 | 1.000 | 1.000 | 640469. | 0.768 | 0.768 |
| 11 | 5 | 957934. | 0.768 | 1.000 | 1.000 | 735550. | 0.768 | 0.768 |

| STATION | LC | -V | RS | RNZ | RC | RS*(-V) | RS*RNZ | RS*RNZ*RC |
|---|---|---|---|---|---|---|---|---|
| 1 | 7 | -875. | 0.768 | 1.000 | 1.000 | -671. | 0.768 | 0.768 |
| 2 | 7 | -12456. | 0.768 | 1.000 | 1.000 | -9564. | 0.768 | 0.768 |
| 3 | 7 | -39316. | 0.768 | 1.000 | 1.000 | -30189. | 0.768 | 0.768 |
| 4 | 7 | -71552. | 0.768 | 1.000 | 1.000 | -54941. | 0.768 | 0.768 |
| 5 | 7 | -108303. | 0.768 | 1.000 | 1.000 | -83161. | 0.768 | 0.768 |
| 6 | 7 | -148739. | 0.768 | 1.000 | 1.000 | -114209. | 0.768 | 0.768 |
| 7 | 7 | -192000. | 0.768 | 1.000 | 1.000 | -147428. | 0.768 | 0.768 |
| 8 | 7 | -237581. | 0.768 | 1.000 | 1.000 | -182427. | 0.768 | 0.768 |
| 9 | 7 | -284980. | 0.768 | 1.000 | 1.000 | -218822. | 0.768 | 0.768 |
| 10 | 7 | -333643. | 0.768 | 1.000 | 1.000 | -256188. | 0.768 | 0.768 |
| 11 | 7 | -383174. | 0.768 | 1.000 | 1.000 | -294220. | 0.768 | 0.768 |

Figure B-16. Sample output from WHVNET of wing design airload shear envelope and normalizing factors.

| STATION | LC | +BM | RS | RNZ | RC | RS*(+BM) | RS*RNZ | RS*RNZ*RC |
|---|---|---|---|---|---|---|---|---|
| 1 | 3 | 30250. | 1.000 | 1.000 | 1.000 | 30250. | 1.000 | 1.000 |
| 2 | 3 | 1485321. | 1.000 | 1.000 | 1.001 | 1485321. | 1.000 | 1.001 |
| 3 | 3 | 9074139. | 1.000 | 1.000 | 1.000 | 9074139. | 1.000 | 1.000 |
| 4 | 3 | 25087216. | 1.000 | 1.000 | 1.000 | 25087216. | 1.000 | 1.000 |
| 5 | 3 | 50297696. | 1.000 | 1.000 | 1.000 | 50297696. | 1.000 | 1.000 |
| 6 | 3 | 85147456. | 1.000 | 1.000 | 1.000 | 85147456. | 1.000 | 1.000 |
| 7 | 3 | 129913888. | 1.000 | 1.000 | 1.000 | 129913888. | 1.000 | 1.000 |
| 8 | 3 | 184687216. | 1.000 | 1.000 | 1.000 | 184687216. | 1.000 | 1.000 |
| 9 | 3 | 249434528. | 1.000 | 1.000 | 1.000 | 249434528. | 1.000 | 1.000 |
| 10 | 3 | 324058624. | 1.000 | 1.000 | 1.000 | 324058624. | 1.000 | 1.000 |
| 11 | 3 | 408404224. | 1.000 | 1.000 | 0.992 | 408404224. | 1.000 | 0.992 |

| STATION | LC | -BM | RS | RNZ | RC | RS*(-BM) | RS*RNZ | RS*RNZ*RC |
|---|---|---|---|---|---|---|---|---|
| 1 | 7 | -12414. | 0.768 | 1.000 | 1.000 | -9532. | 0.768 | 0.768 |
| 2 | 7 | -580099. | 0.768 | 1.000 | 1.000 | -445429. | 0.768 | 0.768 |
| 3 | 7 | -3519777. | 0.768 | 1.000 | 1.000 | -2702661. | 0.768 | 0.768 |
| 4 | 7 | -9815010. | 0.768 | 1.000 | 1.000 | -7536458. | 0.768 | 0.768 |
| 5 | 7 | -20027408. | 0.768 | 1.000 | 1.000 | -15378052. | 0.768 | 0.768 |
| 6 | 7 | -34622624. | 0.768 | 1.000 | 1.000 | -26584992. | 0.768 | 0.768 |
| 7 | 7 | -53970304. | 0.768 | 1.000 | 1.000 | -41441104. | 0.768 | 0.768 |
| 8 | 7 | -78362560. | 0.768 | 1.000 | 1.000 | -60170704. | 0.768 | 0.768 |
| 9 | 7 | -108034288. | 0.768 | 1.000 | 1.000 | -82954160. | 0.768 | 0.768 |
| 10 | 7 | -143160544. | 0.768 | 1.000 | 1.000 | -109925872. | 0.768 | 0.768 |
| 11 | 7 | -183862400. | 0.768 | 1.000 | 1.000 | -141178800. | 0.768 | 0.768 |

Figure B-17. Sample output from WHVNET of wing design airload bending moment envelope and normalizing factors.

*** DESIGN LOADS (RECORD 32) AND RATIOS (RECORD 17) ***  ** WHVNET - IP(53) **

*** HORIZONTAL TAIL ***

| STATION | LC | +V | RS | RNZ | RS*(+V) | RS*RNZ |
|---|---|---|---|---|---|---|
| 1 | 3 | 303. | 1.000 | -2.500 | 303. | -2.500 |
| 2 | 3 | 4142. | 1.000 | -2.500 | 4142. | -2.500 |
| 3 | 3 | 12863. | 1.000 | -2.500 | 12863. | -2.500 |
| 4 | 3 | 23237. | 1.000 | -2.500 | 23237. | -2.500 |
| 5 | 3 | 34889. | 1.000 | -2.500 | 34889. | -2.500 |
| 6 | 3 | 47419. | 1.000 | -2.500 | 47419. | -2.500 |
| 7 | 3 | 60552. | 1.000 | -2.500 | 60552. | -2.500 |
| 8 | 3 | 74108. | 1.000 | -2.500 | 74108. | -2.500 |
| 9 | 3 | 87884. | 1.000 | -2.500 | 87884. | -2.500 |
| 10 | 3 | 101709. | 1.000 | -2.500 | 101709. | -2.500 |
| 11 | 3 | 115483. | 1.000 | -2.500 | 115483. | -2.500 |

| STATION | LC | -V | RS | RNZ | RS*(-V) | RS*RNZ |
|---|---|---|---|---|---|---|
| 1 | 7 | -67. | 0.768 | -0.400 | -52. | -0.307 |
| 2 | 7 | -939. | 0.768 | -0.400 | -721. | -0.307 |
| 3 | 7 | -3000. | 0.768 | -0.400 | -2303. | -0.307 |
| 4 | 7 | -5555. | 0.768 | -0.400 | -4265. | -0.307 |
| 5 | 7 | -8484. | 0.768 | -0.400 | -6514. | -0.307 |
| 6 | 7 | -11671. | 0.768 | -0.400 | -8962. | -0.307 |
| 7 | 7 | -15042. | 0.768 | -0.400 | -11550. | -0.307 |
| 8 | 7 | -18551. | 0.768 | -0.400 | -14244. | -0.307 |
| 9 | 7 | -22146. | 0.768 | -0.400 | -17005. | -0.307 |
| 10 | 7 | -25783. | 0.768 | -0.400 | -19797. | -0.307 |
| 11 | 7 | -29434. | 0.768 | -0.400 | -22601. | -0.307 |

Figure B-18. Sample output from WHVNET of horizontal tail design airload shear envelope and normalizing factors.

| STATION | LC | +BM | RS | RNZ | RS*(+BM) | RS*RNZ |
|---|---|---|---|---|---|---|
| 1 | 3 | 893. | 1.000 | -2.500 | 893. | -2.500 |
| 2 | 3 | 40168. | 1.000 | -2.500 | 40168. | -2.500 |
| 3 | 3 | 240479. | 1.000 | -2.500 | 240479. | -2.500 |
| 4 | 3 | 665714. | 1.000 | -2.500 | 665714. | -2.500 |
| 5 | 3 | 1350397. | 1.000 | -2.500 | 1350397. | -2.500 |
| 6 | 3 | 2319931. | 1.000 | -2.500 | 2319931. | -2.500 |
| 7 | 3 | 3591762. | 1.000 | -2.500 | 3591762. | -2.500 |
| 8 | 3 | 5177965. | 1.000 | -2.500 | 5177965. | -2.500 |
| 9 | 3 | 7086125. | 1.000 | -2.500 | 7086125. | -2.500 |
| 10 | 3 | 9319415. | 1.000 | -2.500 | 9319415. | -2.500 |
| 11 | 3 | 11877795. | 1.000 | -2.500 | 11877795. | -2.500 |

| STATION | LC | -BM | RS | RNZ | RS*(-BM) | RS*RNZ |
|---|---|---|---|---|---|---|
| 1 | 7 | -198. | 0.768 | -0.400 | -152. | -0.307 |
| 2 | 7 | -9087. | 0.768 | -0.400 | -6978. | -0.307 |
| 3 | 7 | -55484. | 0.768 | -0.400 | -42603. | -0.307 |
| 4 | 7 | -156252. | 0.768 | -0.400 | -119978. | -0.307 |
| 5 | 7 | -321615. | 0.768 | -0.400 | -246953. | -0.307 |
| 6 | 7 | -559025. | 0.768 | -0.400 | -429247. | -0.307 |
| 7 | 7 | -873685. | 0.768 | -0.400 | -670859. | -0.307 |
| 8 | 7 | -1269386. | 0.768 | -0.400 | -974698. | -0.307 |
| 9 | 7 | -1749773. | 0.768 | -0.400 | -1342795. | -0.307 |
| 10 | 7 | -2313342. | 0.768 | -0.400 | -1776300. | -0.307 |
| 11 | 7 | -2963753. | 0.768 | -0.400 | -2275718. | -0.307 |

THE POSITIVE AND NEGATIVE LOADS ON THE HORIZONTAL TAIL HAVE BEEN REVERSED
BECAUSE THE NEGATIVE BM AT THE ROOT WAS GREATER THAN THE POSITIVE BM AT THE ROOT

Figure B-19. Sample output from WHVNET of horizontal tail design airload bending moment envelope and normalizing factors.

*** DESIGN LOADS (RECORD 32) AND RATIOS (RECORD 17) ***  ** WHVNET - IP(53) **

*** VERTICAL TAIL ***

| STATION | LC | +V | RS | RNZ | RS*(+V) | RS*RNZ |
|---|---|---|---|---|---|---|
| 1 | 0 | 0. | 1.000 | 1.000 | 0. | 1.000 |
| 2 | 19 | 1880. | 1.000 | 0.141 | 1880. | 0.141 |
| 3 | 19 | 6663. | 1.000 | 0.141 | 6663. | 0.141 |
| 4 | 19 | 12830. | 1.000 | 0.141 | 12830. | 0.141 |
| 5 | 19 | 19659. | 1.000 | 0.141 | 19659. | 0.141 |
| 6 | 19 | 27074. | 1.000 | 0.141 | 27074. | 0.141 |
| 7 | 19 | 35015. | 1.000 | 0.141 | 35015. | 0.141 |
| 8 | 19 | 43361. | 1.000 | 0.141 | 43361. | 0.141 |
| 9 | 19 | 51991. | 1.000 | 0.141 | 51991. | 0.141 |
| 10 | 19 | 60831. | 1.000 | 0.141 | 60831. | 0.141 |
| 11 | 19 | 69934. | 1.000 | 0.141 | 69934. | 0.141 |

| STATION | LC | -V | RS | RNZ | RS*(-V) | RS*RNZ |
|---|---|---|---|---|---|---|
| 1 | 0 | 0. | 1.000 | 1.000 | 0. | 1.000 |
| 2 | 19 | -1880. | 1.000 | 0.141 | -1880. | 0.141 |
| 3 | 19 | -6663. | 1.000 | 0.141 | -6663. | 0.141 |
| 4 | 19 | -12830. | 1.000 | 0.141 | -12830. | 0.141 |
| 5 | 19 | -19659. | 1.000 | 0.141 | -19659. | 0.141 |
| 6 | 19 | -27074. | 1.000 | 0.141 | -27074. | 0.141 |
| 7 | 19 | -35015. | 1.000 | 0.141 | -35015. | 0.141 |
| 8 | 19 | -43361. | 1.000 | 0.141 | -43361. | 0.141 |
| 9 | 19 | -51991. | 1.000 | 0.141 | -51991. | 0.141 |
| 10 | 19 | -60831. | 1.000 | 0.141 | -60831. | 0.141 |
| 11 | 19 | -69934. | 1.000 | 0.141 | -69934. | 0.141 |

Figure B-20. Sample output from WHVNET of vertical tail design airload shear envelope and normalizing factors.

| STATION | LC | +BM | RS | RNZ | RS*(+BM) | RS*RNZ |
|---|---|---|---|---|---|---|
| 1 | 0 | 0. | 1.000 | 1.000 | 0. | 1.000 |
| 2 | 3 | 1469698. | 1.311 | 0.0 | 1926856. | 0.0 |
| 3 | 3 | 1469698. | 1.311 | 0.0 | 1926856. | 0.0 |
| 4 | 3 | 1469698. | 1.311 | 0.0 | 1926856. | 0.0 |
| 5 | 3 | 1469698. | 1.311 | 0.0 | 1926856. | 0.0 |
| 6 | 19 | 2706599. | 1.000 | 0.141 | 2706599. | 0.141 |
| 7 | 19 | 3936427. | 1.000 | 0.141 | 3936427. | 0.141 |
| 8 | 19 | 5488839. | 1.000 | 0.141 | 5488839. | 0.141 |
| 9 | 19 | 7377518. | 1.000 | 0.141 | 7377518. | 0.141 |
| 10 | 19 | 9612231. | 1.000 | 0.141 | 9612231. | 0.141 |
| 11 | 19 | 12230438. | 1.000 | 0.141 | 12230438. | 0.141 |

| STATION | LC | -BM | RS | RNZ | RS*(-BM) | RS*RNZ |
|---|---|---|---|---|---|---|
| 1 | 0 | 0. | 1.000 | 1.000 | 0. | 1.000 |
| 2 | 3 | -1469698. | 1.311 | 0.0 | -1926856. | 0.0 |
| 3 | 3 | -1469698. | 1.311 | 0.0 | -1926856. | 0.0 |
| 4 | 3 | -1469698. | 1.311 | 0.0 | -1926856. | 0.0 |
| 5 | 3 | -1469698. | 1.311 | 0.0 | -1926856. | 0.0 |
| 6 | 19 | -2706599. | 1.000 | 0.141 | -2706599. | 0.141 |
| 7 | 19 | -3936427. | 1.000 | 0.141 | -3936427. | 0.141 |
| 8 | 19 | -5488839. | 1.000 | 0.141 | -5488839. | 0.141 |
| 9 | 19 | -7377518. | 1.000 | 0.141 | -7377518. | 0.141 |
| 10 | 19 | -9612231. | 1.000 | 0.141 | -9612231. | 0.141 |
| 11 | 19 | -12230438. | 1.000 | 0.141 | -12230438. | 0.141 |

Figure B-21. Sample output from WHVNET of vertical tail design airload bending moment envelope and normalizing factors.

** BLCNTL - IP(54) **

| | LOAD CONDITION | ALTITUDE FEET | MACH NUMBER | PRESSURE PSI | LOCAL TEMP DEG R | TOTAL TEMP DEG R | SKIN FLUX BTU/HR/FT2 | SKIN TEMP DEG R | SKIN TEMP DEG F | STRESS WING | STRESS HORIZONTAL | STRESS VERTICAL |
|---|---|---|---|---|---|---|---|---|---|---|---|---|
| 1 | +NZ BALANCED | 0. | 0.6000 | 14.70 | 518.7 | 556.0 | 358.6 | 555.0 | 95.3 | 66000. | 66000. | 66000. |
| 2 | +NZ BALANCED | 0. | 0.0 | 0.0 | 0.0 | 0.0 | 0.0 | 0.0 | 0.0 | 0. | 0. | 0. |
| 3 | +NZ BALANCED | 22500. | 0.8700 | 6.06 | 438.4 | 504.6 | 429.1 | 505.5 | 80.0 | 66000. | 66000. | 66000. |
| 4 | +NZ BALANCED | 0. | 0.0 | 0.0 | 0.0 | 0.0 | 0.0 | 0.0 | 0.0 | 0. | 0. | 0. |
| 5 | +NZ BALANCED | 0. | 0.0 | 0.0 | 0.0 | 0.0 | 0.0 | 0.0 | 0.0 | 0. | 0. | 0. |
| 6 | -NZ BALANCED | 0. | 0.5740 | 14.70 | 518.7 | 552.8 | 358.6 | 552.4 | 92.7 | 66000. | 66000. | 66000. |
| 7 | -NZ BALANCED | 0. | 0.0 | 0.0 | 0.0 | 0.0 | 0.0 | 0.0 | 0.0 | 0. | 0. | 0. |
| 8 | FLAP DOWN MANEUVER | 0. | 0.3334 | 14.70 | 518.7 | 530.2 | 358.8 | 534.7 | 80.0 | 66000. | 66000. | 66000. |
| 9 | FLAP DOWN 1 G TRIM | 0. | 0.1669 | 14.70 | 518.7 | 522.3 | 358.8 | 531.4 | 80.0 | 66000. | 66000. | 66000. |
| 10 | + VERTICAL GUST | 0. | 0.5740 | 14.70 | 518.7 | 552.8 | 358.6 | 552.4 | 92.7 | 66000. | 66000. | 66000. |
| 11 | + VERTICAL GUST | 20000. | 0.8140 | 6.75 | 447.3 | 506.6 | 425.0 | 507.6 | 80.0 | 66000. | 66000. | 66000. |
| 12 | + VERTICAL GUST | 0. | 0.0 | 0.0 | 0.0 | 0.0 | 0.0 | 0.0 | 0.0 | 0. | 0. | 0. |
| 13 | + VERTICAL GUST | 0. | 0.0 | 0.0 | 0.0 | 0.0 | 0.0 | 0.0 | 0.0 | 0. | 0. | 0. |
| 14 | - VERTICAL GUST | 0. | 0.5740 | 14.70 | 518.7 | 552.8 | 358.8 | 552.4 | 92.7 | 66000. | 66000. | 66000. |
| 15 | - VERTICAL GUST | 20000. | 0.8140 | 6.75 | 447.3 | 506.6 | 425.0 | 507.6 | 80.0 | 66000. | 66000. | 66000. |
| 16 | - VERTICAL GUST | 0. | 0.0 | 0.0 | 0.0 | 0.0 | 0.0 | 0.0 | 0.0 | 0. | 0. | 0. |
| 17 | - VERTICAL GUST | 0. | 0.0 | 0.0 | 0.0 | 0.0 | 0.0 | 0.0 | 0.0 | 0. | 0. | 0. |
| 18 | LATERAL GUST | 0. | 0.5740 | 14.70 | 518.7 | 552.8 | 358.6 | 552.4 | 92.7 | 66000. | 66000. | 66000. |
| 19 | LATERAL GUST | 20000. | 0.8140 | 6.75 | 447.3 | 506.6 | 425.0 | 507.6 | 80.0 | 66000. | 66000. | 66000. |
| 20 | PITCH ACCELERATION | 0. | 0.6000 | 14.70 | 518.7 | 556.0 | 358.8 | 555.0 | 95.3 | 66000. | 66000. | 66000. |
| 21 | PITCH ACCELERATION | 22500. | 0.8700 | 6.06 | 436.4 | 504.6 | 429.1 | 505.5 | 80.0 | 66000. | 66000. | 66000. |
| 22 | YAW ACCELERATION | 0. | 0.6000 | 14.70 | 518.7 | 556.0 | 358.6 | 555.0 | 95.3 | 66000. | 66000. | 66000. |
| 23 | YAW ACCELERATION | 22500. | 0.8700 | 6.06 | 436.4 | 504.6 | 429.1 | 505.5 | 80.0 | 66000. | 66000. | 66000. |

DESIGN TEMPERATURE CONDITION

| | | |
|---|---|---|
| WING | 80.0 | 3 |
| HORIZONTAL | 80.0 | 15 |
| VERTICAL | 80.0 | 23 |

*** MAXIMUM NET BENDING MOMENTS FOR FATIGUE ***

| BM AT SOB | CONDITION | NZ | INERTIA BM/NZ | NET BM AT SOB |
|---|---|---|---|---|
| 140137616. | 3 | 2.50 | -28266704. | 69470864. |

| BM AT STA 2 | CONDITION | NZ | INERTIA BM/NZ | NET BM AT STA 2 |
|---|---|---|---|---|
| 124261152. | 3 | 2.50 | -22037552. | 69167280. |

Figure B-22. Sample output from BLCNTL of ambient properties equilibrium skin temperature, structure compression yield strength, design conditions, and maximum net bending moments at wing fatigue evaluation stations.

SPECTRA SEGMENT NO 1.

| SOF BEND MOM | WOS BEND MOM | EXCEEDANCES-GUST | EXCEEDANCES-MAN |
|---|---|---|---|
| 208964320. | 252834912. | 0.72702E-42 | 0.0 |
| 192467120. | 232874256. | 0.50260E-37 | 0.0 |
| 175969920. | 212913600. | 0.34746E-32 | 0.75000E-01 |
| 159472736. | 192952928. | 0.24020E-27 | 0.42500E+00 |
| 142975600. | 172992320. | 0.16605E-22 | 0.22500E+01 |
| 126478400. | 153031664. | 0.11480E-17 | 0.10000E+02 |
| 109981216. | 133071008. | 0.79363E-13 | 0.47500E+02 |
| 93484016. | 113110336. | 0.54866E-08 | 0.26250E+03 |
| 76986816. | 93149680. | 0.37930E-03 | 0.36750E+04 |
| 60489680. | 73189072. | 0.26765E+02 | 0.17500E+06 |
| 49491536. | 59881952. | 0.26765E+02 | 0.20000E+05 |
| 32994352. | 39921296. | 0.37930E-03 | 0.34000E+03 |
| 16497183. | 19960640. | 0.54866E-08 | 0.75000E+00 |
| 0. | 0. | 0.79363E-13 | 0.25000E-02 |
| -16497183. | -19960640. | 0.11480E-17 | 0.0 |
| -32994352. | -39921296. | 0.16606E-22 | 0.0 |
| -49491536. | -59881952. | 0.24020E-27 | 0.0 |
| -65988704. | -79842592. | 0.34746E-32 | 0.0 |
| -82485904. | -99803248. | 0.50260E-37 | 0.0 |
| -98983104. | -119763904. | 0.72702E-42 | 0.0 |

1G SOF M = 54990608. 1G WOS M = 66535504.

Figure B-23. Sample output from FATMG of flight segment wing bending moment spectra.

** FATMG - IP(55) **

SPECTRA SEGMENT NO 10.

| SOF BEND MOM | WDS BEND MOM | EXCEEDANCES-TAXI |
|---|---|---|
| -51480016. | -39948256. | 0.10000E-02 |
| -50125296. | -38897000. | 0.50000E-02 |
| -48776544. | -37845728. | 0.25000E-01 |
| -46061072. | -35743184. | 0.75000E+00 |
| -43351600. | -33640656. | 0.22500E+02 |
| -40642128. | -31538112. | 0.50000E+03 |
| -37932640. | -29435552. | 0.11250E+05 |
| -35223168. | -27333024. | 0.22500E+06 |
| -32513696. | -25230480. | 0.21500E+07 |
| -29804224. | -23127952. | 0.82500E+07 |
| -24385264. | -18922864. | 0.82500E+07 |
| -21675792. | -16820320. | 0.21500E+07 |
| -18966320. | -14717785. | 0.22500E+06 |
| -16256851. | -12615245. | 0.11250E+05 |
| -13547376. | -10512704. | 0.50000E+03 |
| -10837900. | -8410162. | 0.22500E+02 |
| -8128425. | -6307622. | 0.75000E+00 |
| -5418950. | -4205081. | 0.25000E-01 |
| -4064212. | -3153310. | 0.50000E-02 |
| -2709475. | -2102541. | 0.10000E-02 |

Figure B-24. Sample output from FATMG of taxi segment wing bending moment spectra.

** FATMG - IP(55) **

SPECTRA SEGMENT NO 11.

GROUND-AIR-GROUND CYCLES

| SCF BEND MOM | WOS BEND MOM | OCCURRENCES |
|---|---|---|
| [illegible] | [illegible] | 0.25[illegible]0E+05 |
| -[illegible] | -[illegible] | 0.25[illegible]0E+05 |

Figure B-25. Sample output from FATMG of ground-air-ground segment wing bending moment spectra.