UNCLASSIFIED

AD NUMBER

AD921790

NEW LIMITATION CHANGE

TO

Approved for public release, distribution unlimited

FROM

Distribution authorized to U.S. Gov't. agencies only; Test and Evaluation; 16 JUL 1974. Other requests shall be referred to Chief of Staff for Military Operations [Army], Washington, DC 20310.

AUTHORITY

AGO ltr, 29 Apr 1980

THIS PAGE IS UNCLASSIFIED

THIS REPORT HAS BEEN DELIMITED
AND CLEARED FOR PUBLIC RELEASE
UNDER DOD DIRECTIVE 5200.20 AND
NO RESTRICTIONS ARE IMPOSED UPON
ITS USE AND DISCLOSURE.

DISTRIBUTION STATEMENT A

APPROVED FOR PUBLIC RELEASE;
DISTRIBUTION UNLIMITED.

HQDA Ltr 525-74-27

DEPARTMENT OF THE ARMY
OFFICE OF THE ADJUTANT GENERAL
WASHINGTON, D.C. 20310

REPLY TO ATTENTION OF:
DAAG-PAP-A (M) (9 Aug 74) DAMO-ODU

22 August 1974

Expires 22 August 1975

SUBJECT: Operational Report - Lessons Learned, Headquarters, 2d Squadron, 11th Armored Cavalry Regiment, Period Ending 31 October 1971

AD921790

SEE DISTRIBUTION

1. The attached report is forwarded for review and evaluation in accordance with para 4b, AR 525-15.

2. The information contained in this report is provided to insure that lessons learned during active operations are used to the benefit of future operations and may be adapted for use in developing training material, as appropriate. This report should not be interpreted as the official view of the Department of the Army, or of any agency of the Department of the Army.

BY ORDER OF THE SECRETARY OF THE ARMY:

J. C. Pennington

J. C. PENNINGTON
Colonel, AGC
Acting The Adjutant General

1 Incl
as

DISTRIBUTION:
Commandant
US Army Armor School
US Army Aviation School
US Army Engineer School
US Army Intelligence School

Copies furnished:
Deputy Chief of Staff for Operations & Plans
Chief of Engineers
Defense Documentation Center

DDC
RECEIVED
SEP 4 1974
B

UNCLASSIFIED REPORT
DISTRIBUTION LIMITED TO U.S. GOVT AGENCIES ONLY; TEST AND EVALUATION; 16 Jul 74. OTHER REQUEST FOR THIS DOCUMENT MUST BE REFERRED TO THE DEPUTY CHIEF OF STAFF FOR MILITARY OPERATIONS (ARMY). ATTN: DAMO-ODU, WASHINGTON, D.C. 20310

AVIC-YP 15 November 1971

SUBJECT: Operational Report -- Lessons Learned -- 2d Squadron, 11th Armored Cavalry Regiment, Period Ending 31 October 1971 RCS CSFOR - 65 (R3)

2. Lessons Learned:

a. Personnel: None.

b. Intelligence:

(1) Document Readouts:

(a) Observation: In many cases, after enemy documents are captured and evacuated, a great deal of time elapses before a readout comes back to the unit.

(b) Evaluation: Documents often contain information of immediate tactical value. When an appreciable amount of time is required to get readouts back through channels, the value of the information decreases considerably.

(c) Recommendation: An initial readout of captured documents should be made using organic interpretation resources immediately after the document is captured. This practice often enables the exploitation of information in a timely manner.

(2) POW Interrogation:

(a) Observation: Initial interrogation of POW's at squadron level often yields information which may later prove erroneous.

(b) Evaluation: Often captured enemy soldiers give information which is erroneous in an attempt to mislead allied forces. Acting on such information may lead to the establishment of false OB holding and/or an incorrect estimate of the enemy situation within the AO and TAOR.

DAMO-ODU
Inclosure
712188

(c) Recommendation: All information gained from POW's should be cross checked with other intelligence sources.

(3) Hoi Chanh Interrogation:

(a) Observation: Information gained from Hoi Chanh's is often erroneous.

(b) Evaluation: In many cases, an enemy soldier may Chieu Hoi out of necessity. Therefore, a rally does not necessarily indicate a change in allegiance. Because of this, information gained from a Hoi Chanh may vary in intelligence value in much the same manner as information gained from a POW.

(c) Recommendation: Cross check information provided by Hoi Chanh's with other intelligence sources.

(4) Night Hawk/Infant Missions:

(a) Observation: Night Hawk and Infant equipped aircraft can be of value in targeting against limited areas.

(b) Evaluation: It was learned that these aircraft are of little value when assigned large AO's. When they operate too long in a given area, it is easy for the enemy to evade detection or engage them as they move up on his position.

(c) Recommendation: Make maximum utilization of light-equipped aircraft in reconning areas immediately adjacent to friendly locations. At the same time, insure th t friendly ambushes, patrols, etc. are not exposed as a result of their operations. Insure that no pattern develops in the course of Night Hawk/Infant flights.

(5) Indigenous Personnel:

(a) Observation: Indigenous personnel can often provido information concerning enemy activities, but are reluctant to divulge such information to US personnel.

(b) Evaluation: Often indigenous personnel fear reprisal if they are seen conversing on a regular basis with US personnel.

(c) Recommendation: Vietnamese National Police checkpoints should be utilized whenever practicable. When they are placed along traditional routes of travel, checkpoints can lead to the acquisition of information of tactical value. National Police are able to establish rapport with the local people and gain information, while conducting normal identification checks and vehicle searches.

c. Operations: (see Appendix II)

(1) Rome Plow Operations:

(a) Observation: The probability of encountering mines in partially cut areas is significant.

(b) Evaluation: Rome Plow cuts are most often in a generally circular pattern, working from the outside toward the center. If the center portion of the area is not completely cut in one day, the probability that it will be mined during the night greatly increases since the enemy realizes that the plows will return the next day to finish the cut.

(c) Recommendation: That an area selected for cutting in one day be completely finished to eliminate the requirement to re-enter the area, thus reducing exposure to areas most likely to be mined.

(2) Rome Plow Operations:

(a) Observation: Valuable cutting time is lost when travelling to and from the cut area.

(b) Evaluation: If cutting is planned to progress from the NDP outward, eventually large distances must be traversed to reach the area selected for cutting.

(c) Recommendation: Consistent with the requirement to clear an area tactically for establishment of a base of operations, cutting in areas near the NDP should be accomplished while plows are travelling to and from a more distant cut area. This procedure facilitates maximum utilization of available plow cutting time.

(3) Hostile Ground to Air Fire:

(a) Observation: NVA .51 cal machine gun positions are arranged in a triangular pattern near a wood line with weapon emplacements located 25 to 30 meters apart. A secondary triangular set of emplacements is usually located 200 to 400 meters away covering the same sector of fire as the primary.

(b) Evaluation: When an active .51 cal position is observed and engaged, the NVA will attempt to relocate immediately to the secondary position when gunships depart station to re-fuel and/or re-arm. Upon return to the area and resumption of the attack on the primary position, aircraft are taken under fire from the secondary position.

(c) Recommendation: Once a .51 cal position has been observed and attacked, it must be kept under continuous observation until destroyed to prevent relocation of the weapon during re-arming and re-fueling periods.

(4) Establishment of a New Unit Night Defensive Position:

(a) Observation: When operating in areas that had been previously occupied by VC/NVA units, especially where "safe areas" such as hospitals and rear service areas had been located, mines will frequently be encountered.

(b) Evaluation: Apparently extensive minefields are used as part of VC/NVA base camp defenses. In well established areas mines have been emplaced for long periods and therefore difficulties arise in detecting them visually.

(c) Recommendation: Areas selected for night defensive positions must be thoroughly mineswept prior to occupation. Particular care must be devoted to areas immediately adjacent to the NDP such as helipads and maintenance areas.

(5) Mine Sweep Operations:

(a) Observation: A considerable amount of time is required to mine sweep roads that are used daily.

(b) Evaluation: Careless discarding of C-ration cans, expended cartridges and metal links along frequently used roads and trails makes mine-sweeping a particularly difficult and time consuming task.

(c) Recommendation: Using units must be informed of the difficulties created, and required to dispose of metallic waste in accordance with prescribed procedures.

(6) Hasty Bridging:

(a) Observation: In fast moving situations, a method of hasty bridging is required in addition to the employment of AVLB's.

(b) Evaluation: Because of the difficulty of terrain and the threat of extensive mining, exclusive reliance on the use of AVLB's is not tactically sound. Prefabricated M4T6 bridging can rapidly be emplaced by CH47 or CH54 aircraft, thus providing a second means of establishing a hasty crossing.

(c) Recommendation: Engineer units should have at least one prefabricated span on hand with necessary rigging equipment for rapid deployment by air.

d. Organization: None.

e. Training:

(1) Training of Medical Personnel:

(a) Observation: The majority of the medics arriving in Vietnam have not had an adequate amount of practical experience in emergency treatment procedures.

(b) Evaluation: While basic medical training is considered adequate, practical application is extremely limited and not adequate to prepare for the many varied situations encountered in a combat environment.

(c) Recommendation: To insure adequate training is accomplished prior to field unit assignment, medics are assigned to work under direct supervision of the squadron surgeon for a minimum of one week at the unit clearing station where valuable experience and additional training can be obtained.

(2) RPG Screens:

(a) Observation (made by Kit Carson scout - former NVA): RPG screens are much more effective if tightly stretched between uprights.

(b) Evaluation: The individual states that he fired six RPG rounds at a tight screen with little effective results. Others of his unit fired at loosely suspended screens and reported one round was sufficient to destroy the screen.

(c) Recommendation: That as a matter of SOP, RPG screens are erected so that they are rigidly suspended between uprights.

(3) Mining of Roads:

(a) Observation: Many of the mines encountered in the AO were constructed of plastic.

(b) Evaluation: Detection with the metallic mine detectors is nearly impossible. It has also been determined that the non-metallic-density differential mine detector is not practical in this area because of the great variation in road sub-surface density.

(c) Recommendation: Security elements walking with mine sweep teams must check the area immediately adjacent to the road for signs of recent activity that often indicates mine emplacement.

f. Logistics: None.

g. Communications: None.

h. Materiel:

(1) M551 (Sheridan) Inspection Plates:

(a) Observation: Many of the M551 vehicles in the squadron were missing hull inspection plates.

(b) Evaluation: When operating in jungle areas, logs and stumps are often forced through the hull access openings causing damage to power train components. Additionally, when operating on inundated terrain, water and mud enter the hull causing severe damage to electrical components.

(c) Recommendation: The 155mm powder cannister top is an excellent field expedient that effectively seals the smaller hull access openings. Additionally, DS maintenance units have the capability of manufacturing the larger access plates.

(2) Automotive Component Failures:

(a) Observation: The failure rate of drive train components increases significantly during the rainy season (final drives, transmissions, differentials).

(b) Evaluation: Although this situation can be expected due to the increased stress placed on these components when operating in muddy areas, positive steps in terms of load reduction provide some relief. Careful evaluation of ammunition loads and reduction wherever possible must be stressed.

(c) Recommendation: On a continuing basis, vehicle loads, especially ammunition quantities, must be analyzed not only to meet tactical requirements, but also to consider the type of terrain in which vehicles operate.

(3) Electrical Firing of the XM182:

(a) Observation: The nickel-cadmium battery supplied with the XM182 is not adequate for sustained automatic firing of the system.

(b) Evaluation: Apparently nickel-cadmium batteries are rapidly drained when firing in the automatic fire mode and require a lengthy period of time to regain adequate charge.

AVIC-YP 15 November 1971

SUBJECT: Operational Report -- Lessons Learned -- 2d Squadron, 11th Armored Cavalry Regiment, Period Ending 31 October 1971 RCS CSFOR - 65 (R3)

(c) Recommendation: Direct electrical wiring from the XM182 to the vehicle system has eliminated the problem.

WILLIAM M. STOKES III
LTC, Armor
Commanding

2 Incls

1. APPENDIX I - Organization Chart
2. APPENDIX II - "Armored Cavalry - Rome Plow Marriage"

APPENDIX I

ORGANIZATIONAL CHART

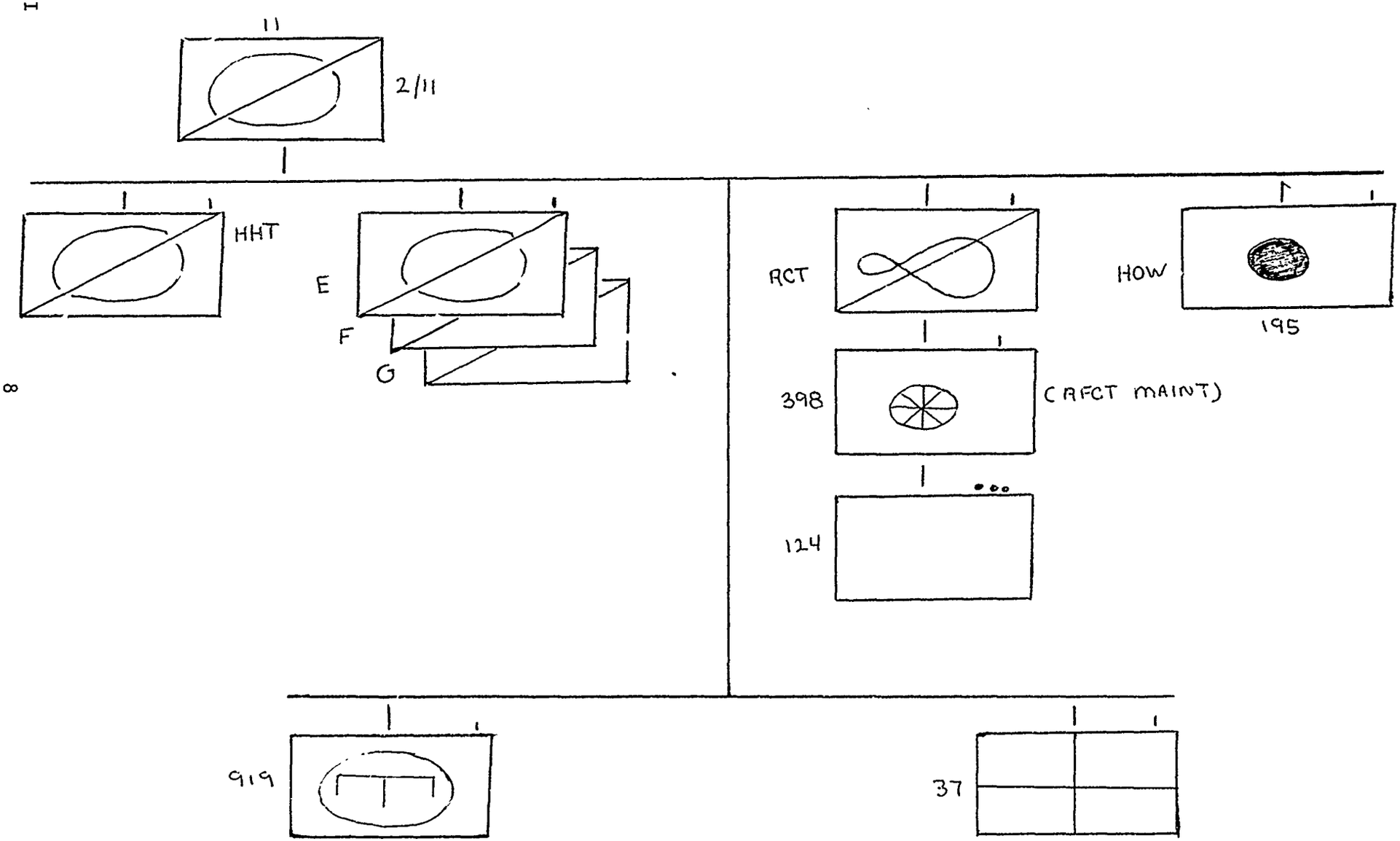

"ARMORED CAVALRY - ROME PLOW MARRIAGE"

PRESENTATION BY LTC WILLIAM M. STOKES III, CO, 2ND SQUADRON, 11TH ARMORED CAVALRY REGIMENT, BEFORE 1971 ARMOR CONFERENCE, REPUBLIC OF VIETNAM

28 JULY 1971

APPENDIX II

Colonel Hiep, fellow Armor soldiers. It is a great pleasure for me to be able to address the 1971 Armor Conference today. Your schedule for today shows a discussion of U.S. armor employment by the 1st Brigade, 5th Mech Div, but because of the stand-down of that unit, I have been asked to share with you some thoughts concerning armored cavalry in MR III -- specifically the armored cavalry role in land clearing operations.

What I intend to do is talk about two major phases of the Rome Plow operations of the 2nd Squadron, 11th Armored Cavalry Regiment, in Tay Ninh and Hau Nghia Provinces -- Rome Plow security and reconnaissances-in-force.

Reconnaissance-in-force (RIF) missions for Rome Plow operations are not unlike other RIF operations. Simply stated, the armored cavalry squadron is well suited by its mobility, firepower, and communications (the very essence of armor, as General Abrams just mentioned) to move into areas with the force required to exploit meeting engagements and to determine the size, composition, and disposition of the enemy. The basic fundamental of reconnaissance still applies -- we orient on the enemy or the area designated for reconnaissance.

The standard Rome Plow cutting cycle runs about forty-five days, then the plows stand down for extensive maintenance. It is during the plow stand-down that reconnaissance-in-force missions can be most effective. The RIF phase of Rome Plow operations is conducted for four principal reasons:

(1) To determine trafficability of the area in preparation for the return of the 37-ton plows. As General Abrams mentioned in his presentation this morning, it is wasteful to employ armor in swampy terrain where most of the effort must be expended to extricate downed vehicles rather than exploit armor's firepower against the enemy. I have seen too many operations stopped completely because the vehicles became stuck in the mud. Two recent trafficability analyses in the Boi Loi Woods pointed out the need for bridging to accomplish the mission. For example, in reconnoitering the area along Highway 19 between Khiem Hanh and Dau Tieng, it was determined that an armored vehicle launched bridge would be required. Similarly, reconnaissance efforts in the lower Boi Loi Woods area indicated a requirement for bridging to enable the plows to move into the cut area; this engineering task was accomplished quickly and efficiently by the 301st Engineers (ARVN);

(2) To determine enemy strengths, weaknesses, and dispositions;

(3) To keep the enemy on the move -- to harass him; and

(4) To help in planning Rome Plow operations, for example, the size and shape of the cut or which areas should receive priority for tactical reasons.

One may ask why the reconnaissance phase is needed, since the area is going to be plowed anyway. It must be remembered that Rome Plows are very vulnerable to enemy weapons, particularly RPGs. The reconnaissances-in-force tend to prevent the enemy from concentrating to counter land clearing efforts.

We seek contact during the RIF operations, but when the plows arrive to cut the wooded area, time spent fighting will reduce plow cutting time, resulting in less acreage cut. We may lessen the requirement for fighting during the cutting cycle by a thorough, aggressive reconnaissance-in-force.

Well, what forces should be used in the reconnaissance phase of land clearing operations? In our operations in Hau Nghia and Tay Ninh Provinces, we have used a variety of forces -- air force, army, and navy -- relying heavily upon a combined Vietnamese/US relationship. Our operations have used air strikes, naval screens along the Saigon River flank, multi-caliber artillery (both Vietnamese and US tubes), and task forces of Vietnamese infantry and US armored cavalry. We have also used "pink" teams (a Cobra gunship and light observation helicopter) for screening missions and aero-rifle elements in "snatch" missions along the fringes of the Boi Loi Woods. Population and resources control measures have been important; for this aspect of our RIF tasks we have used the National Police and armored cavalry elements to establish mobile control points. The major teaching point here is that planning for the employment of armored cavalry in reconnaissance-in-force operations should consider the use of all available support.

Why the infantry/armored cavalry combination? There are several very practical reasons, I think. While ACAVs (M113) and Sheridans (M551) are vulnerable to large mines, they do protect the infantry from antipersonnel mines and boobytraps. When working in heavily bunkered and forested areas, however, the infantry is essential for checking bunker and tunnel complexes.

It is not normally desirable to dismount armor crewmen to investigate bunkers because it takes them away from their crew-served weapons. A solution, of course, would be to insure that the armored cavalry has adequate infantry, either organic or attached.

Another practical matter with regard to our reconnaissance-in-force operations in MR III is the positioning of the infantry. Most often we have mounted the infantry on our track vehicles during approach marches and in mined and boobytrapped areas. But the infantry must dismount to look into tunnels, spider holes, bunkers, and clumps of trees which may contain cache sites. Infantry can operate appropriately between track vehicles and to their flanks, but the utmost care must be taken to avoid having infantry directly to the rear of track vehicles. Upon taking significant fire, a track vehicle can be expected to make adjustments in its position, for example, to back to the rear quickly to allow artillery support to be provided or to take advantage of available cover. Even in medium vegetation there is the possibility of vehicles backing over the infantry if the infantry is directly behind the ACAVs and Sheridans.

The key to harmonious infantry-armored cavalry operations is control -- control which comes from careful planning, good radio communications, proper use of pyrotechnics, and good attention to safety. Also, when armored cavalry and infantry work together with low-flying helicopters providing surveillance, particular care must be taken to insure that the light observation helicopter

is not struck by friendly fire during either a contact or when ground elements are conducting reconnaissance by fire.

Very close planning is required for the evacuation and maintenance of vehicles during the reconnaissance operations. Rarely is an adequate, secure axis available to permit speedy evacuation. When a vehicle breaks down during our operations, unit maintenance attempts to make repairs. If evacuation is required during the early stages of the reconnaissance, the maintenance element of the unit whose vehicle is down is escorted to the disabled vehicle and the vehicle is evacuated to a maintenance area. However, once a unit has proceeded beyond about one half its prescribed route, the unit normally must tow the vehicle with another combat vehicle -- not a wholly satisfactory solution because it decreases the capability of the towing vehicle to perform its combat mission and places additional stress on its transmission.

A final point with regard to RIF operations -- formations. There are many variations to standard Armor combat formations that can be adapted to RIF operations in jungle areas, but in practice the 2nd Squadron, 11th Armored Cavalry Regiment, has most often used the three shown here (Charts A, B, and C). Let's quickly examine the major merits of each formation.

Chart A shows the line formation. We use this formation in the more open areas. As you can see, it provides wide coverage with maximum firepower to the front. The formation is more difficult to control than others and,

of course, sacrifices some security to the flanks.

Next is the flying wedge, which we have used with excellent results in light scrub growth. This formation provides good firepower to both the front and the flanks -- good all-round security. In the dense growth, however, we have found this formation somewhat difficult to control.

The final formation I will mention here is the double bust which is really a variation of the column. This formation obviously provides less firepower to the front than the two I have just described, but firepower to the flanks is excellent as you can see. The double bust is the formation we most often use when operating in moderate-to-heavy jungle, since the lead vehicles bust through the heavy growth, thus easing the way for the remaining elements. Also, this formation provides excellent control and minimum exposure to enemy boobytraps and mines which, as you know, abound in the Boi Loi Woods where we have been operating. If mines are hit, less combat power is usually lost than when a minefield is hit along a broad front.

So much for reconnaissance-in-force operations -- next a few words on Rome Plow security.

As armored cavalry security forces we give close attention to both the area to be cleared and the night defensive position (NDP) occupied by the plows and security forces.

First, the cutting area (Chart D). Along the top of the chart you see the mobile security force. This force is normally led by a conventional bulldozer which cuts a security road around the area to be cleared that day; the dozer detonates boobytraps and mines that may be in the path of the mobile security forces -- usually an armored cavalry troop (-). The security elements operate about fifty meters to the outside of the internal cutting plows. As the Rome Plows continue their cutting, with the area to be cut getting smaller and smaller, the security element continues its parallel path around them. The armored cavalry forces screen the cutting plows and rapidly respond to enemy forces attempting to enter the screen or attack the plows from within. When infantry are available, they will ride on the security vehicles during the first trip around the cut -- the initial trace. Thereafter, the infantry sweep the cut area well behind the plows to search exposed bunkers carefully and sweep through small patches of vegetation around bomb craters or near streams where the heavy vehicles cannot travel.

Additional security is provided through the use of static blocking positions placed astride likely enemy avenues into and out of the cut area. The number of positions varies with the enemy situation and terrain, but normally a troop (-), or two platoons, performs these tasks.

Additionally, "pink" teams establish aerial screens and conduct reconnaissance, while artillery blocking fires are used to deny the enemy entry into the area. Another helpful security measure is the use of National Police to conduct population/resources control operations, as was done during the RIF phase.

To sum up the security aspect, both mobile and static security elements are used, supplemented with infantry and police assistance, artillery support, and "pink" team coverage.

Operations within the screen are fairly simple as you can see on Chart D. The plows cut overlapping swaths of jungle in an ever-decreasing perimeter. Normally the plows will cut in a counter-clockwise direction since it affords the operators better visibility. Following behind the plows in the cut area will be a maintenance element (drag element) which aids downed plows and helps extract them from marshy areas and bomb craters and evacuate them to the NDP for repair.

Night or day the near-by NDP is a hub of activity. The position houses both the armored cavalry and land clearing elements. Normally, two armored cavalry platoons remain in the NDP during the day to provide security as well as perform maintenance. The NDP also contains the heavy maintenance elements of the land clearing forces. Night defensive positions are moved frequently both as a deceptive measure and to place the plows closer to the cutting areas. Because of the frequent NDP moves, we do not make heavy use of protective wire. However, extensive use is made of defensive concentrations (mortar and artillery), claymore mines, and trip flares. Radar, organic weapons, and the berm constructed by the plows make the NDP a formidable outpost.

Well, I see my time is up. I would like to close by stressing again that armored cavalry forces are well suited for Rome Plow security operations and the important reconnaissance that must precede land clearing efforts. Together, Rome Plows and armored cavalry make a formidable team. The Rome Plow - armored cavalry "marriage" has proved to be an highly effective arrangement. I believe that our combined forces performing these land clearing operations are writing an important chapter in the history of Armor.

Thank you for sharing your time with me.

UNCLASSIFIED

Security Classification

DOCUMENT CONTROL DATA - R & D

(Security classification of title, body of abstract and indexing annotation must be entered when the overall report is classified)

1. ORIGINATING ACTIVITY *(Corporate author)* HQ DA (DAMO-ODU), Washington, D.C. 20310	2a. REPORT SECURITY CLASSIFICATION UNCLASSIFIED 2b. GROUP

3. REPORT TITLE

Operational Report - Lessons Learned, Headquarters, 2d Squadron, 11th Armored Cavalry Regiment, Period Ending 31 October 1971 (U)

4. DESCRIPTIVE NOTES *(Type of report and inclusive dates)*

31 October 1971

5. AUTHOR(S) *(First name, middle initial, last name)*

William M. Stokes III

6. REPORT DATE 15 November 1971	7a. TOTAL NO. OF PAGES 20	7b. NO. OF REFS
8a. CONTRACT OR GRANT NO. b. PROJECT NO. c. N/A d.	9a. ORIGINATOR'S REPORT NUMBER(S) 712188 9b. OTHER REPORT NO(S) *(Any other numbers that may be assigned this report)*	

10. DISTRIBUTION STATEMENT

11. SUPPLEMENTARY NOTES N/A	12. SPONSORING MILITARY ACTIVITY HQ DA (DAMO-ODU), Washington, D.C. 20310

13. ABSTRACT

unclassified

DD FORM 1 NOV 65 1473