UNCLASSIFIED

AD NUMBER

AD920130

NEW LIMITATION CHANGE

TO

Approved for public release, distribution unlimited

FROM

Distribution authorized to U.S. Gov't. agencies only; Test and Evaluation; 01 JUL 1974. Other requests shall be referred to Naval Ship Systems Command, Washington, DC.

AUTHORITY

USNSSC ltr, 10 Jan 1975

THIS PAGE IS UNCLASSIFIED

AD920130

THE UNIVERSITY OF TEXAS AT AUSTIN

ARL-TR-74-7
4 March 1974

Copy No. 53

HIGH FREQUENCY FLOW NOISE

Final Report Under Contract N00024-73-C-1117, Task 0003
7 February 1973 - 6 February 1974

Clarence W. Dittman
James K. Vinson
Jimmy F. Byers

NAVAL SHIP SYSTEMS COMMAND
Contract N00024-73-C-1117
Proj. Ser. No. SF 11121501, Task 17142

D D C
RECEIVED
JUL 1 1974
B

FOR OFFICIAL USE ONLY

ARL-TR-74-7
4 March 1974

HIGH FREQUENCY FLOW NOISE

Final Report Under Contract N00024-73-C-1117, Task 0003
7 February 1973 - 6 February 1974

Clarence W. Dittman
James K. Vinson
Jimmy F. Byers

Distribution limited to U.S. Gov't. agencies only; Test and Evaluation; 1 JUL 1974. Other requests for this document must be referred to Naval Ship Systems Cmd. Code: PM5302-24 Wash. D.C. 20364

NAVAL SHIP SYSTEMS COMMAND
Contract N00024-73-C-1117
Proj. Ser. No. SF 11121501, Task 17142

APPLIED RESEARCH LABORATORIES
THE UNIVERSITY OF TEXAS AT AUSTIN
AUSTIN, TEXAS 78712

FOR OFFICIAL USE ONLY

PRECEDING PAGE BLANK-NOT FILMED

ABSTRACT

A high frequency flow noise study was conducted at the Applied Research Laboratories (ARL), The University of Texas at Austin. The facility for measurement of flow noise is described. Data are presented for two frequencies, 100 kHz and 200 kHz, and for three soundhead array designs, a planar array, a cylindrical array, and a liquid lens. Data from acoustical measurements show (1) the effects of the speed of the soundhead through the water, (2) the effects of array location within a planar hydrophone housing, (3) the effects of streamlining soundheads, and (4) the effects of streamlining surface piercing struts. The liquid lens hydrophone configuration proved most noise resistant. Recommendations are made for reduction of flow noise by means of soundhead design. Parameters for future flow noise experiments are presented.

FOR OFFICIAL USE ONLY

PRECEDING PAGE BLANK-NOT FILMED

TABLE OF CONTENTS

	Page
ABSTRACT	iii
LIST OF FIGURES	vii
I. INTRODUCTION	1
II. DESCRIPTION OF EQUIPMENT USED IN FLOW NOISE STUDY	7
A. Data Acquisition Facility	7
1. General Description of Operation	7
2. Description of Facility Components	8
a. Winch and Tow Rope	8
b. Flow Noise Platform	10
c. ARL-300 Hydrophone System	12
1) Hydrophone and Mounting Strut	12
2) Noise Detection Electronics	22
d. OAS Hydrophone System	27
1) OAS Hydrophone	27
2) OAS Electronics	30
e. Lens Hydrophone System	32
1) Lens Hydrophone	32
2) Lens Electronics	32
B. Data Reduction Procedures	37
III. MEASURED FLOW NOISE	39
A. ARL-300 Hydrophone	39
1. FNSPL Variation Due to Array to Dome Separation	39
2. FNSPL Data Comparison Between Bare Face and Cylindrical Dome Configurations	44
3. FNSPL Data Comparison Between Bare Face and Streamlined Dome Configurations	44
4. FNSPL Attributable to Strut Configuration	44
B. OAS Hydrophone	52
C. Lens Hydrophone	53
IV. CONCLUSIONS	57
V. RECOMMENDATIONS FOR FUTURE FLOW NOISE STUDIES	61
REFERENCES	63
FLOW NOISE BIBLIOGRAPHY	65

FOR OFFICIAL USE ONLY

PRECEDING PAGE BLANK-NOT FILMED

LIST OF FIGURES

		Page
1.	Comparison of 100 kHz Flow Noise Level of Two Different Hydrophones and Housings	5
2.	Towing Winch for Flow Noise Test Vehicle	9
3.	Flow Noise Platform	11
4.	ARL-300 Hydrophone Housing With Cylindrical Dome Exploded View	13
5.	1:4 Wedge Mounting Strut	14
6.	ARL-300 Hydrophone With Streamlined Dome Mounted on 1:12 Plate Strut	16
7.	Thickness Function (δ) and Pressure Coefficient (C_p) for NACA 0020 Airfoil	17
8.	Pressure Coefficient for NACA 0020 Airfoil Tail Matched at Maximum Thickness (t=4 in.) to Cylindrical Nose	19
9.	Array Surface to Dome Exterior Separations for Cylindrical and Streamlined Dome Configurations of ARL-300 Hydrophone	20
10.	ARL-300 Hydrophone Array, Element Detail	21
11.	Beam Pattern for 0.353 in. Dimension of One Element of ARL-300 Array, 100 kHz	23
12.	ARL-300 Hydrophone Array	24
13.	ARL-300 Hydrophone and Cables	25
14.	Block Diagram of Flow Noise Platform Electronics	26
15.	OAS Hydrophone Mounted on a 1:12 Plate Strut	28
16.	Detail of OAS Array and Element Numeration	29
17.	Beam Pattern for One Element of OAS Hydrophone 200 kHz	31
18.	Lens Hydrophone Housing	33
19.	Lens Hydrophone Housing and Window	34
20.	Housing and Element Array Detail for Lens Hydrophone	35
21.	Superimposed Beam Patterns for the 4-Element Liquid Lens Array, 100 and 112 kHz	36
22.	FNSPL versus Speed, Dome to Array Separation as a Parameter: ARL-300 Hydrophone, Cylindrical Dome Housing, 1:4 Wedge Strut, 100 kHz, 10 kHz Bandwidth	40

FOR OFFICIAL USE ONLY

LIST OF FIGURES (Cont'd)

		Page
23.	FNSPL versus Speed, Dome to Array Separation as a Parameter: ARL-300 Hydrophone, Streamlined Dome Housing, 1:12 Plate Strut, 100 kHz, 10 kHz Bandwidth	42
24.	FNSPL versus Speed, Bare Face and Cylindrical Dome Comparison: ARL-300 Hydrophone, 1:4 Wedge Strut, 100 kHz, 10 kHz Bandwidth	45
25.	FNSPL versus Speed, Bare Face and Streamlined Dome Comparison: ARL-300 Hydrophone, 1:12 Plate Strut, 100 kHz, 10 kHz Bandwidth	46
26.	FNSPL versus Speed, 1:4 Wedge and 1:12 Plate Strut Comparison: Bare Face ARL-300 Hydrophone, 100 kHz, 10 kHz Bandwidth	47
27.	FNSPL versus Speed, OAS Hydrophone, 1:4 Wedge Strut, 200 kHz, 20 kHz Bandwidth	50
28.	FNSPL versus Speed, OAS Hydrophone, 1:12 Plate Strut, 200 kHz, 20 kHz Bandwidth	51
29.	FNSPL versus Element Position, Speed as a Parameter, OAS Hydrophone, 1:4 Wedge Strut	54
30.	FNSPL versus Element Position, Speed as a Parameter, OAS Hydrophone, 1:12 Plate Strut	55

FOR OFFICIAL USE ONLY

ITEM 0003: FLOW NOISE STUDIES
C. Dittman, K. Vinson, and J. Byers

I. INTRODUCTION

As currently practiced, minehunting is a slow, laborious process. The information rates of state-of-the-art high resolution sonar systems would allow higher operating speeds than those presently used; however, attempts to run the new systems at faster speeds have been unsuccessful due to the self-noise appearing in the sonar output. This self-noise is usually attributable to water or hull borne noise from the propulsion machinery or components, to water and spray action against the platform hull, and to noise produced as the soundhead is propelled through the water. The dominance of one or more of these noise sources as a function of parameters such as frequency or speed cannot be predicted. Some evidence has been collected, however, that indicates that noise caused by the flow of water around the soundhead may become the dominate source of noise above speeds of 8 to 10 kt.

With plans now being developed for higher speed minehunting platforms and sonars, an examination of high frequency, high resolution sonar flow noise and noise reduction techniques was needed. Although this examination focuses on only one aspect of the overall noise problem, it was felt that significant reductions in flow noise levels, and hence higher operating speeds, could be achieved with a modest research effort on flow noise.

Flow noise is a label applied to any signal received in a hydrophone that is due to the hydrophone's motion through water. For the purpose of analysis, water (like air) is characterized as a Newtonian fluid with a large Reynolds number. A Newtonian fluid assumes the existence of viscous forces acting tangentially between layers of fluid in addition to the pressure acting normally on the layers. The Reynolds number is determined by the ratio

FOR OFFICIAL USE ONLY

$$R = \frac{\text{inertial forces}}{\text{viscous forces}} \quad .$$

The motion characteristics of water may be closely approximated by the simple equations of motion of an ideal fluid, except in those narrow regions of flow which surround any moving solid body of appreciable size. In those regions, viscous forces are in effect, and at low speeds, the flow of the fluid over the solid body is smooth and orderly. Flow speed varies from being at rest on the surface of the body to being in motion only to the extent necessary to equalize the stream velocity of the ideal fluid outside the narrow region immediately surrounding the body; this narrow region is commonly called the boundary layer. In this case of low speed and orderly flow, the thickness of the boundary layer can be described as a stack of incremental layers of fluid, with each layer having a velocity slightly different from its neighbor. This is generally referred to as laminar flow.

The stage defined as turbulent flow occurs when the orderly laminar flow within the boundary layer begins to break up and become erratic as speed increases beyond a critical point. The critical point is determined mainly by geometry of the body and roughness of the surface.

With further increases in speed, the pressure fluctuations present in the turbulent flow will eventually become severe. Some localized regions will lack sufficient pressure to maintain the liquid phase of water, causing an adiabatic transition to the gaseous phase in those regions. Unlike turbulence, the onset of cavitation is not purely a function of speed and body geometry, but it also varies with static pressure. In some cases involving the movement of unstreamlined bodies through water, cavitation will occur before turbulence. With minehunting sonars, unlike submarine and torpedo mounted sonar systems, the cavitation suppression sometimes gained by operating at great depths and pressure is

FOR OFFICIAL USE ONLY

not available. Most minehunting is done with the sonar suspended at shallow depths; thus, operation takes place in a low pressure, cavitation prone region.

The agents causing flow noise are considered to be the small, localized regions of pressure fluctuation in turbulent flow and the stronger shocks caused by the rapid formation and collapse of the bubbles of cavitation. Lower frequency hydrophones used in submarine and torpedo mounted sonars have element surfaces in their arrays which are large compared to the size of the pressure fluctuation encountered in turbulent flow; thus, the effect tends to be integrated out. High resolution minehunting sonars operating at high frequencies require small elements and the integration effect is lessened as the size of the fluctuations approach that of the element face; thus, turbulence affects minehunting sonars to a greater degree. Cavitation can occur at any angularity or irregularity on the body of the hydrophone, and the acoustical effects of the change of state are stronger than those effects due to turbulence. The fact is well documented that the noise generated by the formation, acoustic oscillation, and collapse of cavitation bubbles greatly degrades the sonar performance at ship sonar and torpedo frequencies. One can extrapolate that the same effect will hold at minehunting frequencies, except that the size of the bubbles affecting the sonar should be smaller in order to generate the correspondingly higher frequencies. However, extrapolation, no matter how well presented and justified, must be verified by measurements or replaced by new theories suggested by the experimental data.

Prior to the onset of this study, only two sets of high frequency flow noise data were available. Flow noise data were gathered at Applied Research Laboratories (ARL), The University of Texas at Austin, from existing minehunting hydrophones operating at a 100 kHz frequency, at speeds varying from 5 to 13 kt.[1] Data were also collected by Naval Ship Research and Development Center (NSRDC) from a hydrofoil mounted, obstacle

FOR OFFICIAL USE ONLY

avoidance sonar housed in a minimal cavitation body operating at 100 kHz frequency, at speeds ranging from 25 to 42 kt.[2] The results of these studies are presented in Fig. 1. Note that, before what is thought to be the onset of cavitation, noise is observed to increase about 5 dB per speed doubling. After the onset of cavitation, the increase is about 25 dB per speed doubling. The ARL data taken with existing mine-hunting hydrophones show cavitation beginning around 10 kt, while NSRDC data taken with its special minimal cavitation housing show the onset of cavitation to be around 35 kt. Note also that the effect attributed to turbulent flow noise over the 5 dB per speed doubling slope appears to match both sets of data. This match leads to the speculation that, in the absence of cavitation noise, the turbulent flow noise could be represented by the one single linear function with a slope of 5 dB per speed doubling, as shown in Fig. 1.

It was hoped that some of the gaps in the data could be filled and some experimental verification of present speculation could be obtained in this continuation of the high resolution sonar flow noise studies at ARL. The purposes of this study were

(1) to measure the flow noise of conventionally designed high resolution sonar soundheads,

(2) to make minor changes in the fairing design to provide more streamlined flow around the soundheads in order to determine the influence of streamlining and fairing smoothness on flow noise, and

(3) to conduct a detailed study of soundhead design with a goal of flow noise reduction.

The purpose of item one was to establish the level of flow noise contributed by the soundhead alone and to establish a baseline upon which future work could be evaluated. The goal of item two was to reduce the existing flow noise by simple, quick means and to provide guidelines for proper fairing design. The purpose of item three was to investigate in detail the influence of soundhead design on flow noise and to provide guidelines on the design of future high resolution sonar soundheads.

FOR OFFICIAL USE ONLY

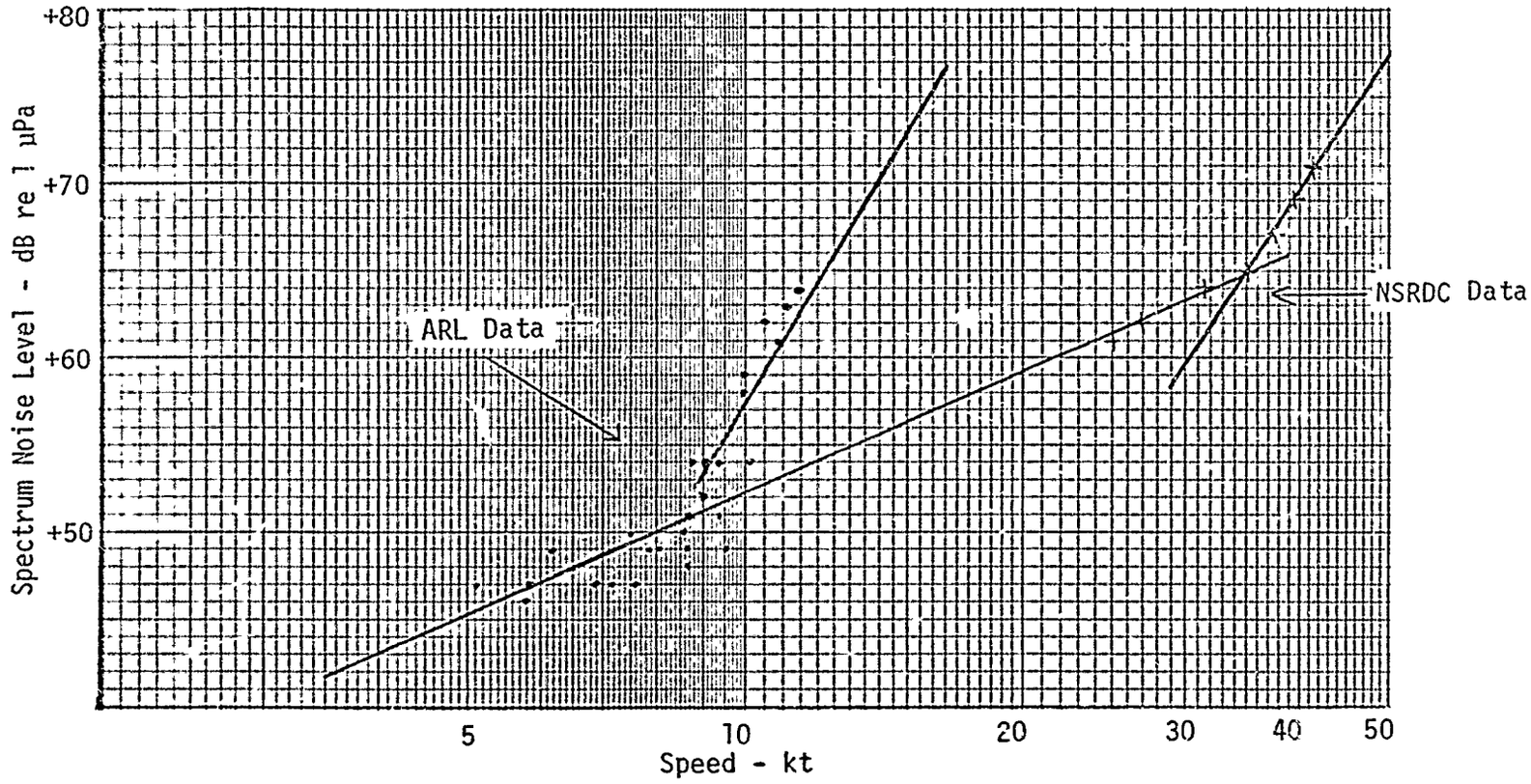

FIGURE 1

COMPARISON OF 100 kHz FLOW NOISE LEVEL OF TWO DIFFERENT HYDROPHONES AND HOUSINGS

FOR OFFICIAL USE ONLY

During the course of this flow noise study, data were collected from

(1) a 100 kHz hydrophone, ARL-300, especially designed for flow noise measurements, with three housing configurations (bare face (no dome), cylindrical dome, and "ideal" streamlined dome) and a variable array-to-dome separation,

(2) a 200 kHz obstacle avoidance sonar (OAS) soundhead, and

(3) a 112 kHz cylindrical lens soundhead.

Some effort was expended in investigating the noise caused by the hydrophone mounting strut. Two strut columns were used: a 1:4 wedge column and a 1:12 plate column.

FOR OFFICIAL USE ONLY

II. DESCRIPTION OF EQUIPMENT USED IN FLOW NOISE STUDY

Much of the equipment held over from the previous flow noise study has been modified and new equipment has been built. A complete description of the flow noise facility and data reduction equipment as it was used in this study is included here.

A. Data Acquisition Facility

The basic components of the flow noise facility at the ARL Lake Travis Test Station (LTTS) were fabricated for the flow noise studies conducted under Contract N00014-70-A-0166, Task 0006, during the period 1 June 1971 through 31 August 1972.[1,3,4] A high speed, high power mobile winch, located at a convenient spot on the lake shore, was used to tow a flow noise platform through the lake at selected speeds. The platform consisted of a rigid aluminum frame supported by two 16 ft catamaran hulls; the hydrophone was mounted on a strut and suspended between the two hulls at a 2.5 ft depth. The frame also provided support for the electronic equipment necessary to record the flow noise generated by the motion of water over the hydrophone face.

1. General Description of Operation

After the winch is located at a suitable spot on the lake shore, the tow rope is attached to the platform and a power boat is used to tow the platform away from the winch. After the platform has been towed away from the winch assembly to the limit of the rope, the platform is positioned so that it faces the winch, and a reading is made of the tape recorder tape footage counter. Then a switch is depressed to start the automatic sequence for the beginning of a run. A 15 sec delay permits the operator of the powered tow boat to get it out of range and turn it

FOR OFFICIAL USE ONLY

off, so that its noise will not interfere with the experiment. The recorder then begins recording the ambient noise level in the lake. After a prearranged interval, the winch accelerates the platform to the desired speed and holds that speed. The operator stops the winch before the platform is in danger of ramming aground, and the drag of the hydrophone in the water brings the platform to an almost immediate stop. The tape recorder turns off at the end of its preset time interval. The power boat returns and tows the platform back out to the limit of the rope and the process is repeated.

2. Description of Facility Components

In accordance with the recommendations of the previous flow noise study, some of the basic equipment has been modified and new equipment has been constructed. The following is a description of the flow noise facility, including both its original components and the equipment fabricated during this study.

a. Winch and Tow Rope

The high speed, high power winch used to tow the catamaran through the water is shown in Fig. 2. The surface of the take-up drum was replaced with a 1/4 in. steel sheath, and several I-beam cross supports were added to strengthen the cylindrical shell. These actions were taken to prevent the threatened collapse of the drum and to ensure a circular cross section so that the towing would be as smooth as possible.

A 1/2 in. diam polypropylene rope was chosen as the tow line because of several desirable properties. It exhibits a 4000 lb breaking point, very low elasticity, and so light a weight that the entire rope is out of the water when towing at any appreciable speed.

FOR OFFICIAL USE ONLY

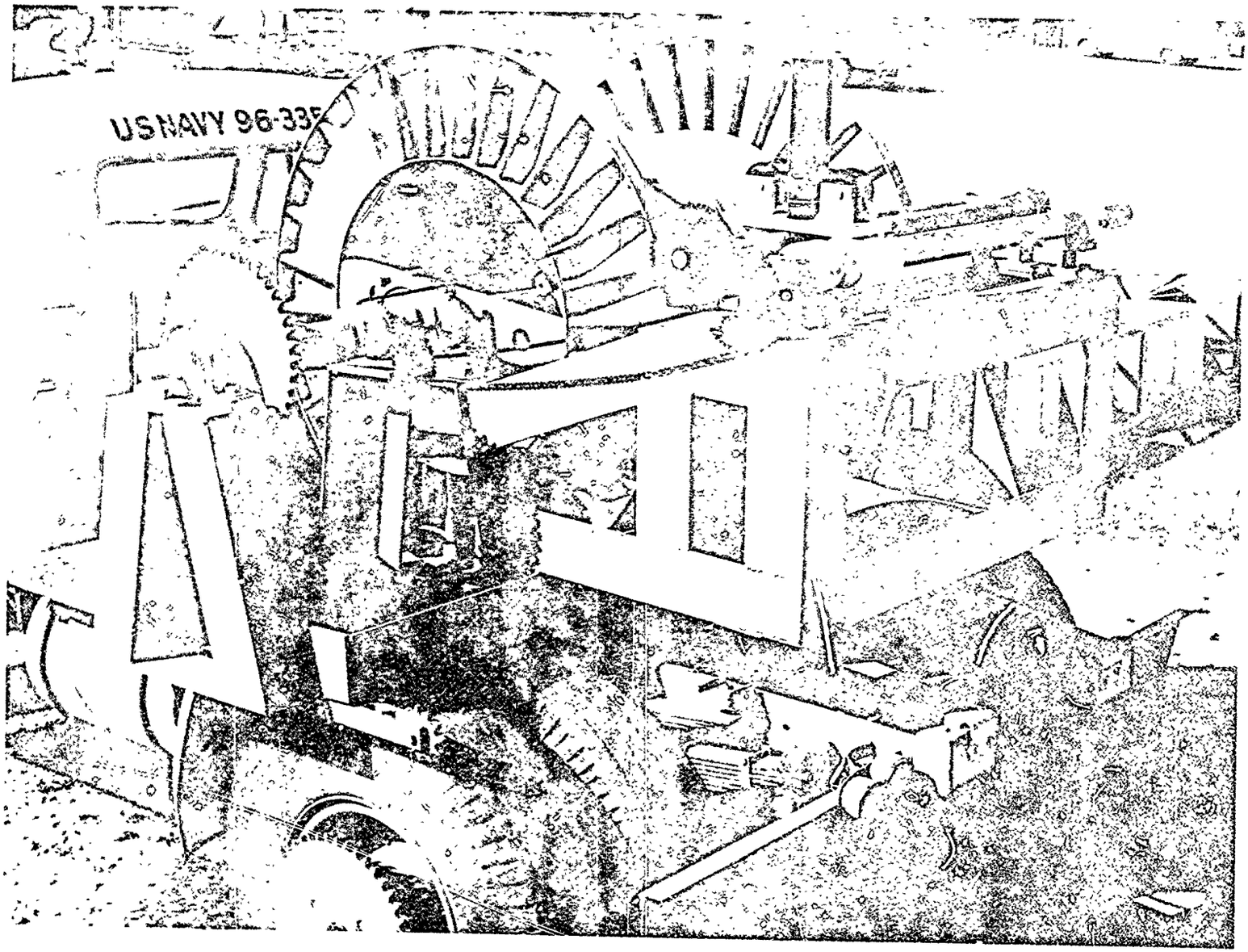

FIGURE 2

TOWING WINCH FOR FLOW NOISE TEST VEHICLE

b. Flow Noise Platform

The basic flow noise platform shown in Fig. 3 has not been changed. The two 16 ft catamaran hulls support a rigid aluminum frame which in turn supports the instrumentation packages and a mounting mechanism for the hydrophone. The tow rope is attached by a towing harness to the front edges of the frame just above the front of each hull. The attachment points between the frame and harness have been redesigned to support the attachment from both top and bottom to prevent bending or breaking due to any sudden stress during initial acceleration of the platform.

To compensate for nose down torque caused by drag of the hydrophone, longitudinal adjustment of the hydrophone location is made possible by two slide rails that are approximately 6 ft long and are mounted midlength of the catamaran frame. The hydrophone strut mounting assembly can be tilted to a horizontal position to provide quick maintenance. A set of knockout shear pins ensures that the strut will remain locked in its vertical position for data taking. The frame is notched and provided with a removable section to permit swinging the hydrophone strut past the horizontal; however, it now seems the need for this feature has been alleviated by the design of a specialized flow noise hydrophone which will not require any field changes to the hydrophone proper. All the individual element wires are brought up to the electronics unit, and the choice of patterns or individual elements to be tested is now made via a quick disconnect socket arrangement.

A new watertight case for the 7-track Sangamo 3500 instrumentation recorder has been constructed and mounted just in front of the hydrophone mounting strut. The new case features a small window through which the tape-turns counter (calibrated in feet of tape) can be read and noted at the start of each run. A similar watertight case for the amplifying and detection electronics is mounted behind the

FOR OFFICIAL USE ONLY

FIGURE 3
FLOW NOISE PLATFORM

FOR OFFICIAL USE ONLY

hydrophone mounting strut. Plastic cases for securing the batteries which supply power for the recorder and electronics package are fastened near the rear of the platform.

A switch is mounted at the rear of the flow noise platform to initiate the automatic control of the recording sequence. A micro-precision limit switch was selected primarily for its large throw bar which offers a convenient target for activation from an adjacent boat. A detachable winch is positioned on the platform to assist in mounting and removing the hydrophone.

To measure the catamaran speed, a small water-driven propeller generates a frequency proportional to the flow velocity. This signal is recorded continuously on one channel of the tape recorder to provide the necessary speed information.

c. ARL-300 Hydrophone System

1) Hydrophone and Mounting Strut

The flow noise ARL-300 hydrophone features a 75-element array enclosed in a streamlined housing. The housing is designed so that the array can be mounted flat face (without a dome), or with a cylindrical dome, or with a streamlined dome. The mounting bracket for the array also permits the distance between the array and its dome to be varied.

An exploded view of the housing with a cylindrical dome is shown in Fig. 4. The strut shown in Fig. 4 was abandoned in favor of the 1:4 wedge strut shown in Fig. 5. The new strut presents a thinner dimension to the direction of water flow; it also is a much stronger fairing.

FOR OFFICIAL USE ONLY

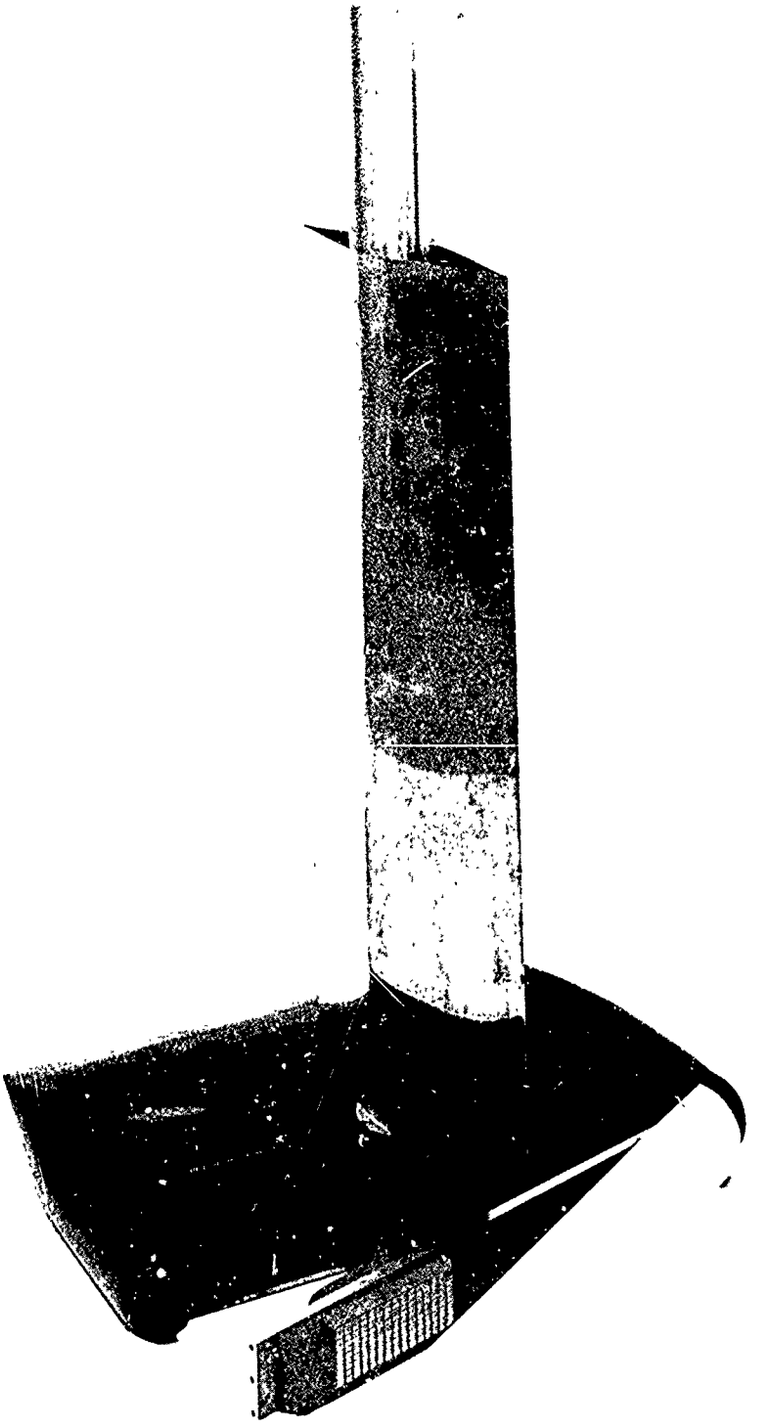

FIGURE 4
ARL-300 HYDROPHONE HOUSING WITH CYLINDRICAL DOME
EXPLODED VIEW

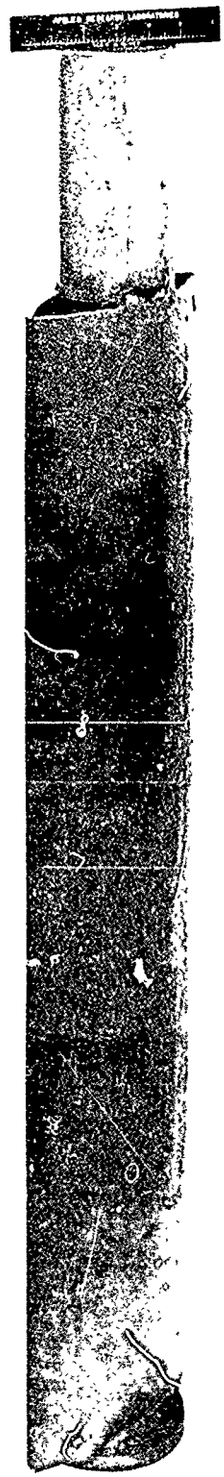

FIGURE 5
1:4 WEDGE MOUNTING STRUT

FOR OFFICIAL USE ONLY

Figure 6 shows the ARL-300 hydrophone mounted on the 1:12 plate strut with the streamlined dome in place. Figure 7 shows the NACA 0020 airfoil shape chosen for the streamlined dome and housing and the thickness function from which it was derived.[5] In Fig. 7, δ is 1/2 thickness at each point, t is maximum thickness, L is overall length, and x is the length variable. Also in Fig. 7 is a plot of the pressure coefficient for the NACA 0020 airfoil, calculated according to the Th. von Kármán and K. Pohlhansen approximation method as outlined in Schlichting.[6]

As is shown in Hoerner,[7] the critical speed at which cavitation at a depth of 2.5 ft will occur is given by

$$V_{critical} = 1.04 \left(\frac{27}{\sqrt{\sigma_i}}\right) \quad \text{(knots)} \quad ,$$

where

σ_i, the incipient cavitation number, is related to c_{pmin}, the minimum value of the pressure coefficient, c_p, by

$$\sigma_i = \left|c_{pmin}\right| \quad .$$

It can be observed from the plot of the pressure coefficient in Fig. 7 that $\left|c_{pmin}\right|$ is 0.73; therefore, $\sqrt{\sigma_i} \approx 0.85$ and $V_{critical} \approx 33$ kt.

This value assumes ideal conditions that never really exist. Open water rarely exists without containing absorbed gases, tiny bubbles, or other impurities that serve as cavitation nuclei, and thus cause $V_{critical}$ to be somewhat lower.

FOR OFFICIAL USE ONLY

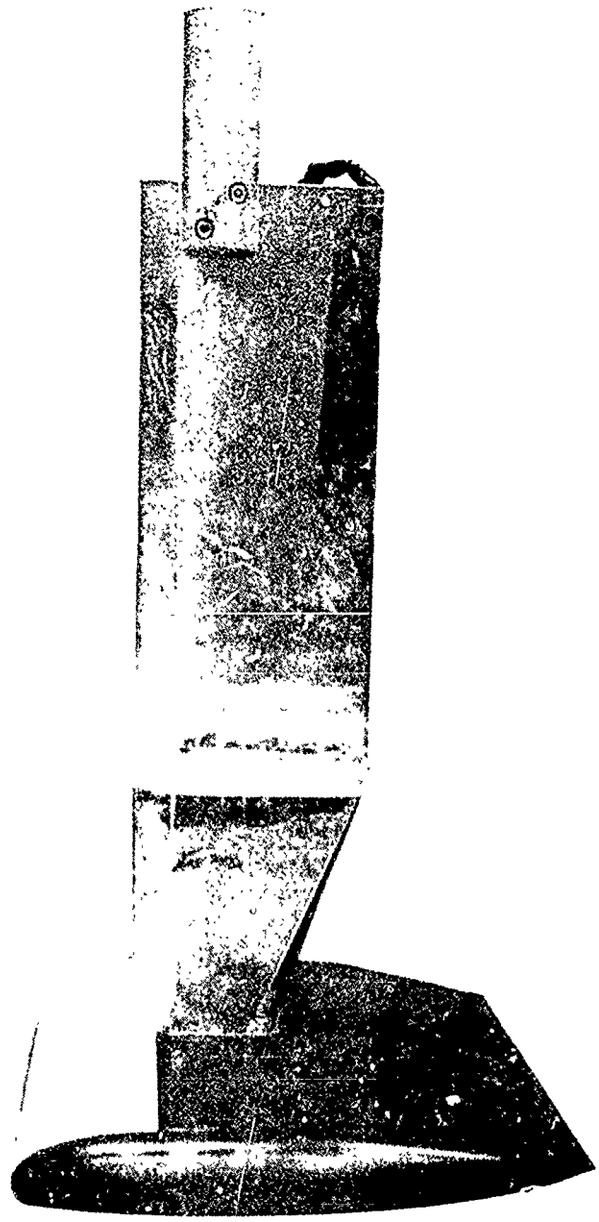

FIGURE 6
ARL-300 HYDROPHONE WITH STREAMLINED DOME
MOUNTED ON 1:12 PLATE STRUT

FOR OFFICIAL USE ONLY

$$\delta = \pm t\left[1.4845\sqrt{\frac{x}{L}} - 0.6300\,\frac{x}{L} - 1.758\left(\frac{x}{L}\right)^2 + 1.4215\left(\frac{x}{L}\right)^3 - 0.5075\left(\frac{x}{L}\right)^4\right]$$

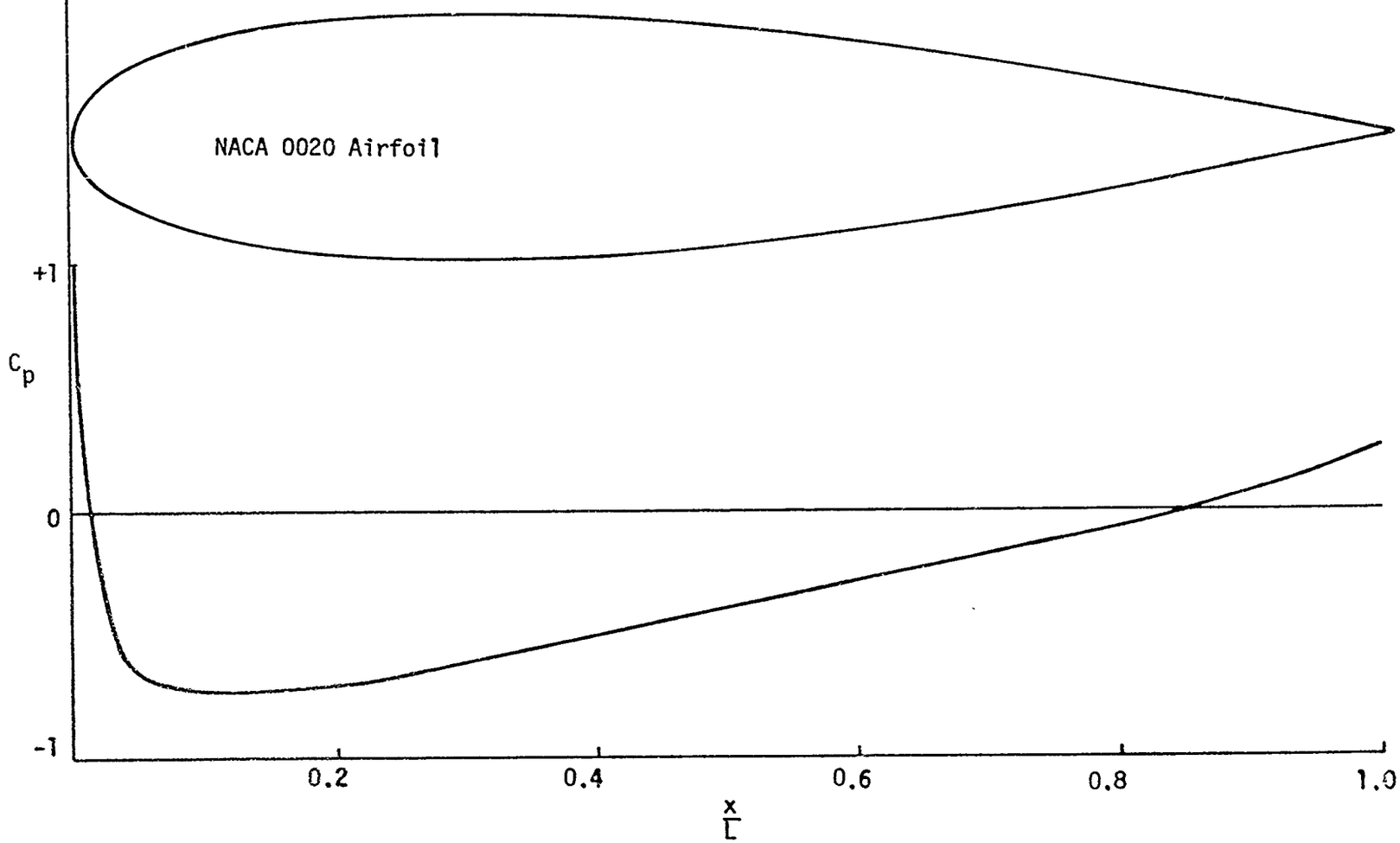

FIGURE 7

THICKNESS FUNCTION (δ) AND PRESSURE COEFFICIENT (C_p) FOR NACA 0020 AIRFOIL

FOR OFFICIAL USE ONLY

Reference can be made to Fig. 7 to determine the physical location on the NACA 0020 airfoil at which cavitation will begin, which is the location of c_{pmin}.

Figure 8 shows a cross section of the ARL-300 hydrophone with cylindrical dome. This shape is composed of a NACA 0020 airfoil tail matched to a cylindrical nose at maximum thickness of the NACA 0020 airfoil. The corresponding pressure coefficient is also plotted in Fig. 8. By noting that $c_{pmin} \approx 1.7$, $V_{critical}$ for this shape is 21.6 kt. As a worst case comparison, a 4 in. cylindrical strut would give a $V_{critical}$ of ≈16 kt. A geometric reference for the separation of the face of the array from the outer surface of the cylindrical and of the streamlined domes (as measured along the axis) is provided in Fig. 9.

The 75 ceramic elements of the ARL-300 hydrophone are arranged in a 5 x 15 matrix made of Channelite 5500 ceramic. The physical detail of the individual elements is shown in Fig. 10. A thickness of 0.552 in. is chosen because of its 100 kHz resonance. The element numbering system and subsequent selection of six 15-element subarrays (P_1,P_2,P_3,P_4,P_5,P_6) are also shown in Fig. 10(a),(b),(c). The arrows in the subarrays indicate the order of the elements in the multiplex scheme, which is explained in the next section. The base plate is 1/2 in. stainless steel on which is mounted a pressure release backing of 1/4 in. chloroprene. The array is mounted upon this pressure release backing and each element of the array is separated by a 0.03 in. layer of chloroprene. The outer edges of the array are covered with a 0.03 in. layer of chloroprene; the center slit of each element is filled with a slab of 0.03 in. chloroprene. The array is potted with CPC-16 to a thickness of 1/8 in. over the face of the elements.

In Fig. 9, the dashed lines denote the -3 dB points of the 80° beamwidth for an individual element, for each position of the

FOR OFFICIAL USE ONLY

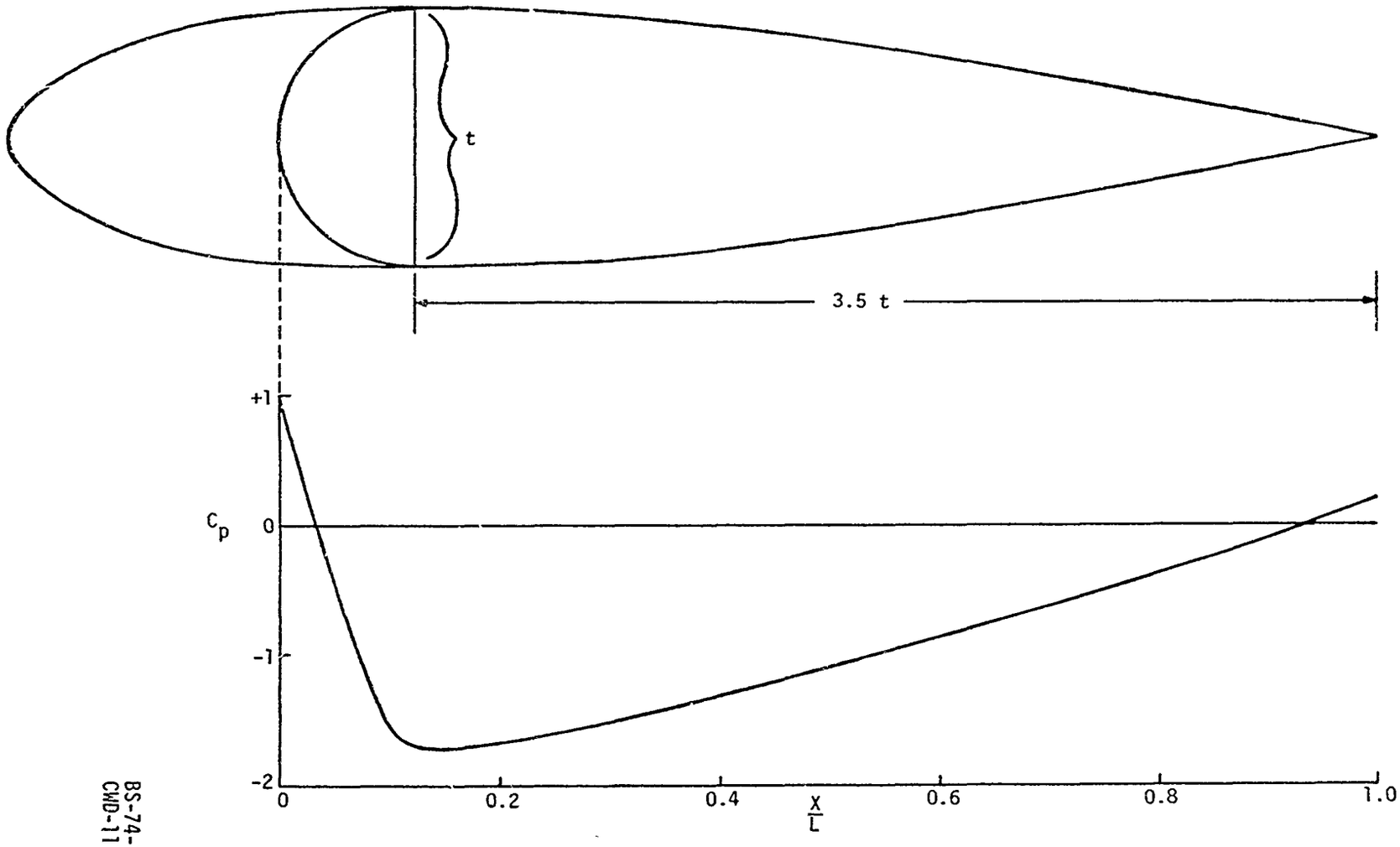

FIGURE 8

PRESSURE COEFFICIENT FOR NACA 0020 AIRFOIL TAIL
MATCHED AT MAXIMUM THICKNESS (t=4 in.) TO CYLINDRICAL NOSE

BS-74-1588
CWD-1117-3

FOR OFFICIAL USE ONLY

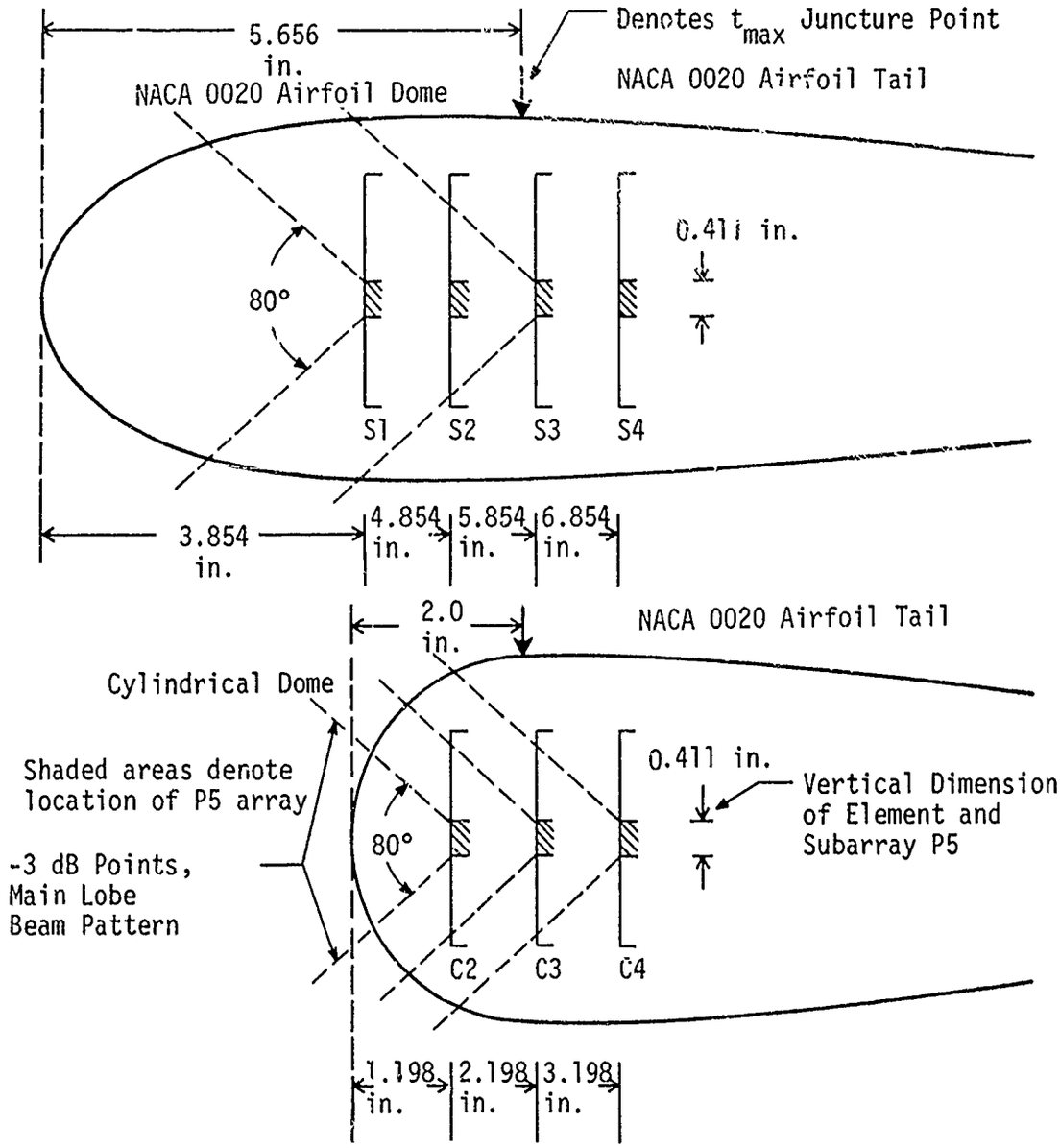

FIGURE 9

ARRAY SURFACE TO DOME EXTERIOR SEPARATIONS FOR
CYLINDRICAL AND STREAMLINED DOME CONFIGURATIONS OF ARL-300 HYDROPHONE

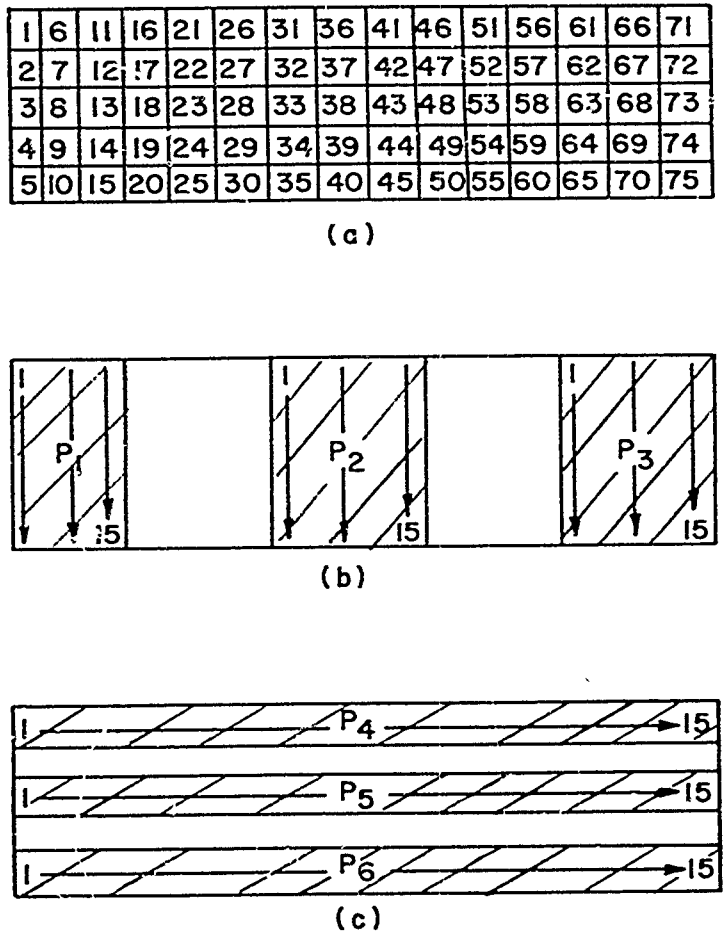

DETAIL OF ELEMENT-ARRAY SECTION

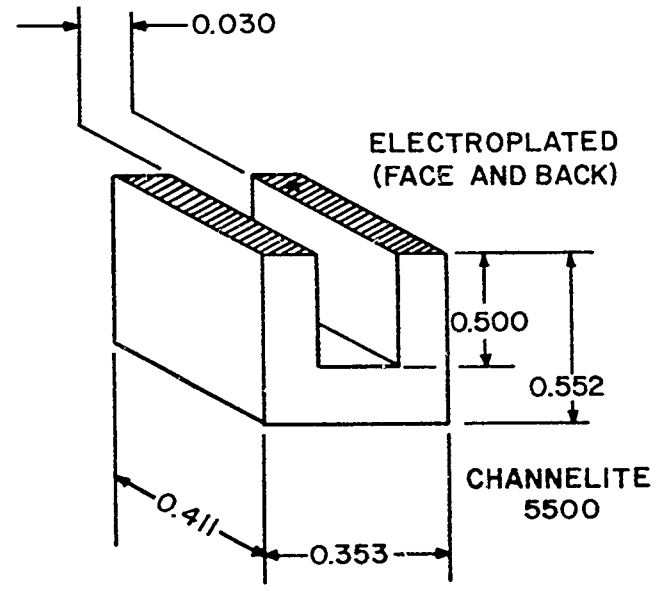

DETAIL OF ELEMENT

FIGURE 10

ARL-300 HYDROPHONE ARRAY, ELEMENT DETAIL

FOR OFFICIAL USE ONLY

AS-73-1609
CWD - 1117-3

array behind the respective domes. From the element beamwidth and geometrical layout of the hydrophone housing, the areas of dome surface contributing to flow noise recorded by the array in various positions can be inferred. The horizontal beam pattern (0.353 in. dimension) for one element of the ARL-300 is presented in Fig. 11. The vertical beam pattern (0.411 in. dimension) is quite similar.

A photograph of the face of the completed array is presented in Fig. 12.

Signal wires from each element of the 75-element array are brought out the back of the array through a suitable cable with connectors, as shown in Fig. 13. This cable assembly is routed to the electronic box through the hollow center of the 1:4 wedge strut and up a channel cavity in the rear of the 1:12 plate strut.

2) Noise Detection Electronics

The functions of the noise detection electronics will be explained with reference to the block diagram in Fig. 14. The signal from each element in the hydrophone is brought into the water-tight electronics unit via the connectors C1 and C2. The signals from each of the elements involved in the formation of the six array combinations (Fig. 10(b),(c)) are routed to the respective plugs marked P1 through P6. The connector J_x is then used to select the desired array. The signals from the 15 elements of the selected array are separately fed into the 15 preamplifiers shown in Fig. 14. The preamplifier gains have been measured as 28 dB. The outputs of these preamplifiers are used in two ways. They are used as inputs to the summing amplifier and as inputs to the next stage of amplifiers marked AD-YU amplifiers in Fig. 14. These AD-YU amplifiers and the sum amplifier are individually fed into identical detector circuitry which provides a dc level corresponding to the signal generated by each element. The multiplexed

FOR OFFICIAL USE ONLY

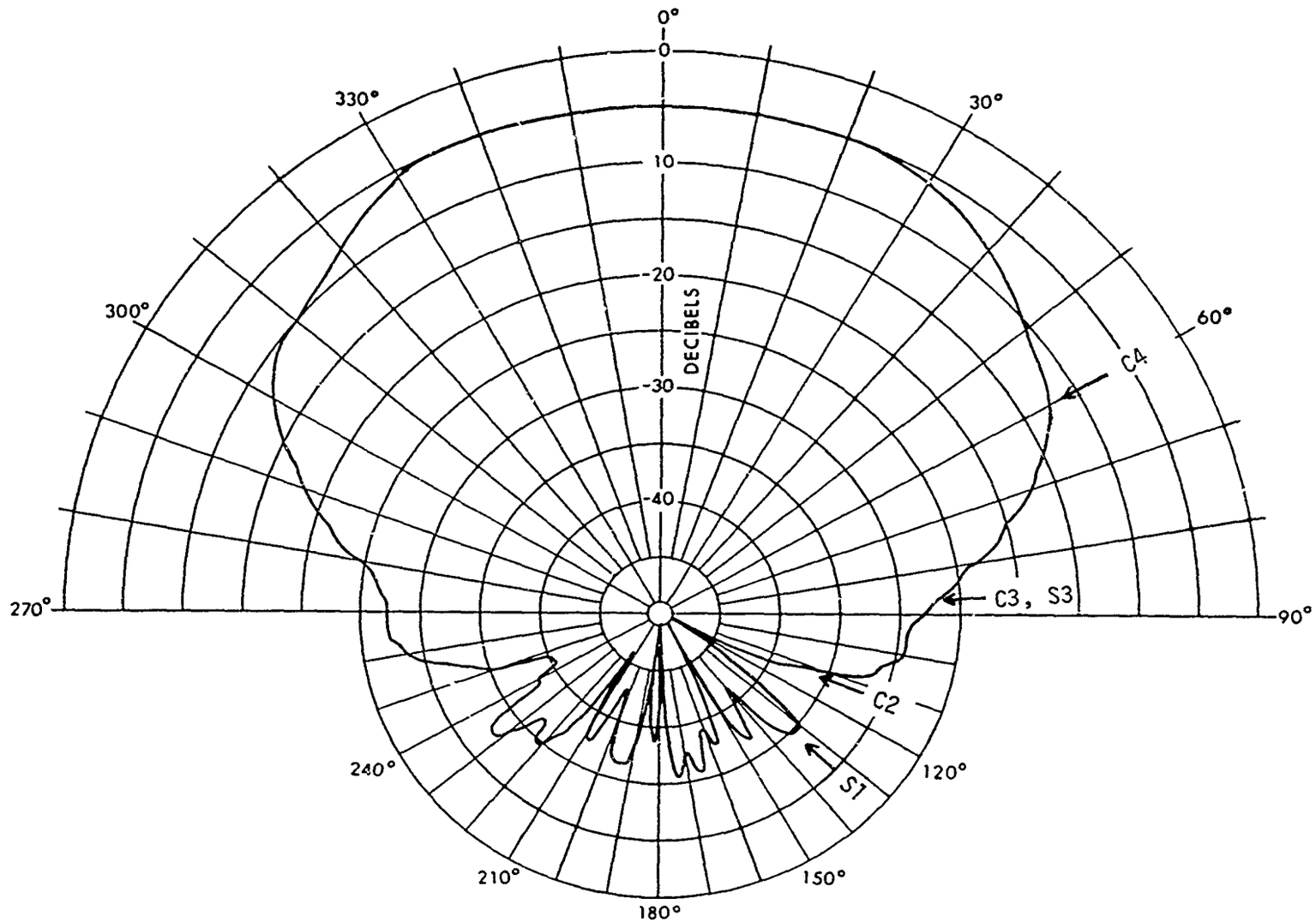

FIGURE 11

BEAM PATTERN FOR 0.353 in. DIMENSION OF ONE ELEMENT OF ARL-300 ARRAY, 100 kHz

FOR OFFICIAL USE ONLY

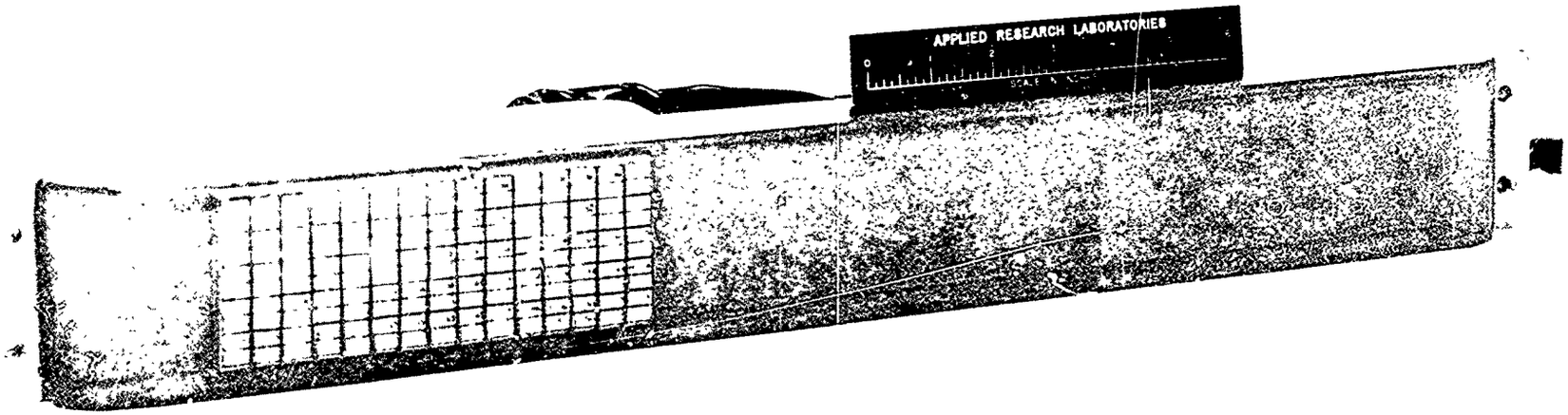

FIGURE 12
ARL-300 HYDROPHONE ARRAY

FOR OFFICIAL USE ONLY

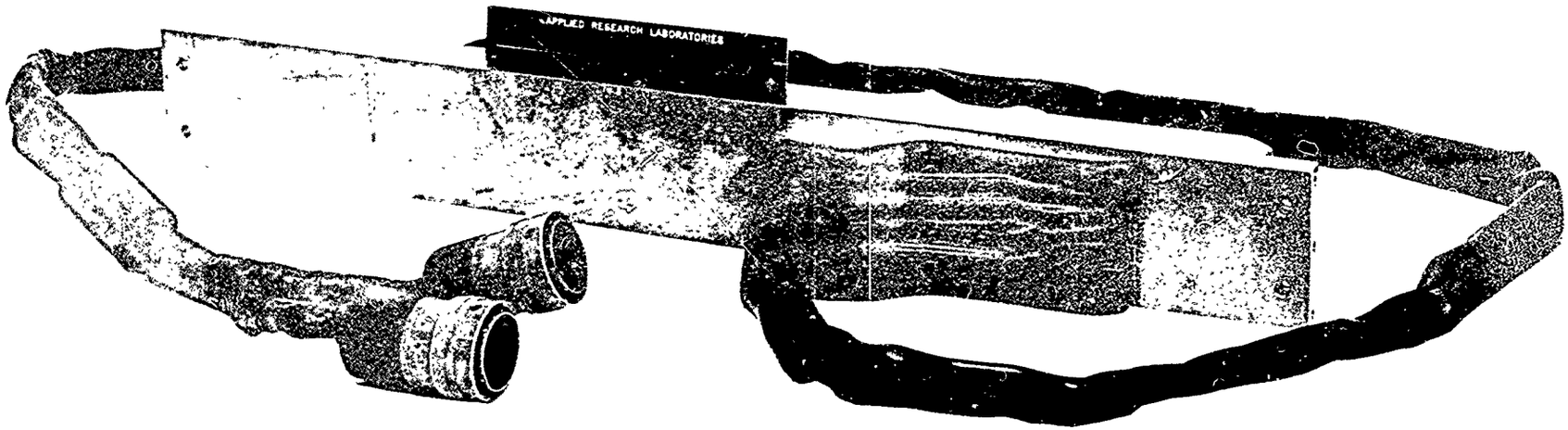

FIGURE 13
ARL-300 HYDROPHONE AND CABLES

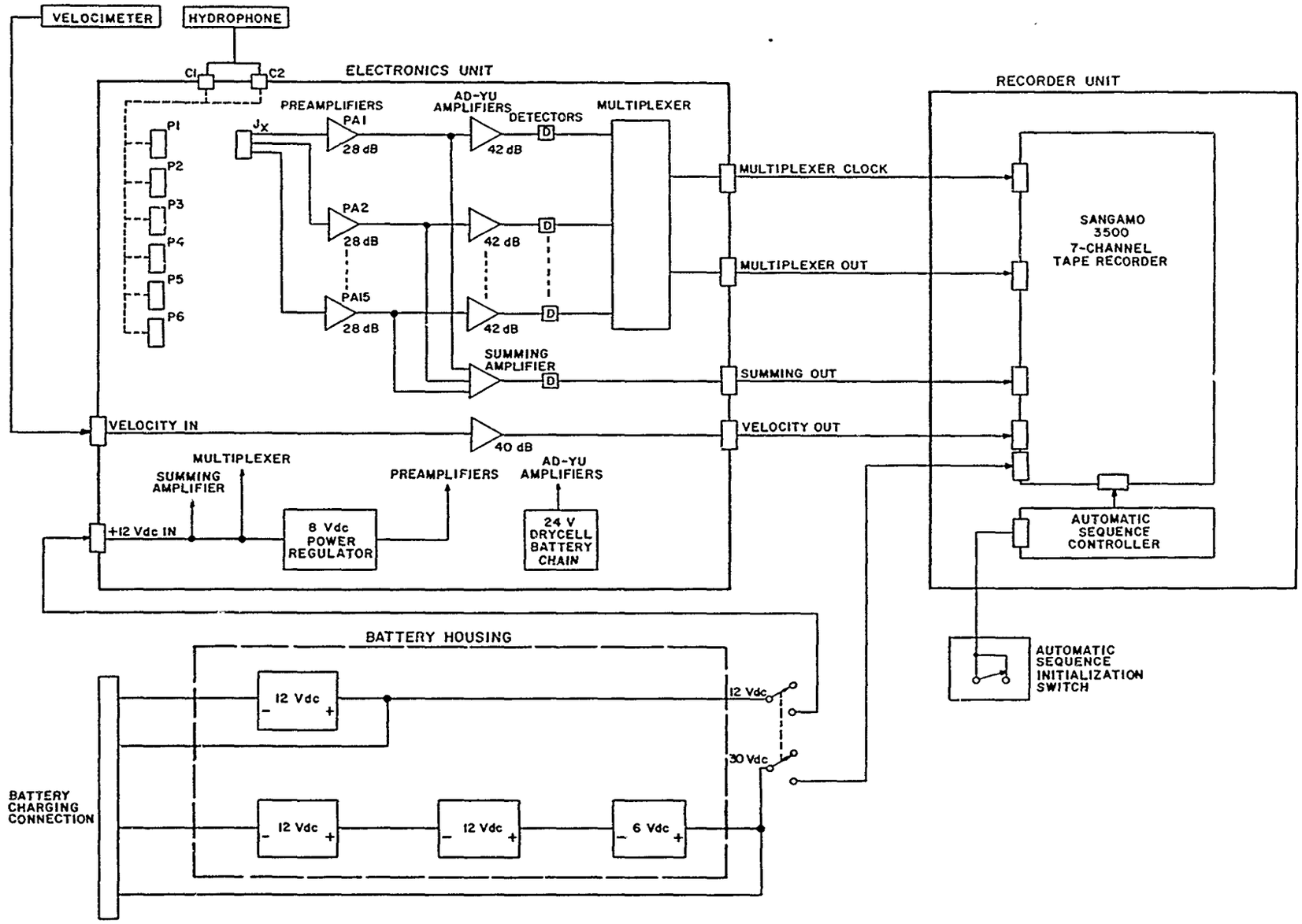

FIGURE 14

BLOCK DIAGRAM OF FLOW NOISE PLATFORM ELECTRONICS

FOR OFFICIAL USE ONLY

output, the multiplexer clock, and the detected sum output are brought to the output connectors of the electronics unit. As can be inferred from Fig. 14, one AD-YU type amplifier is used to amplify the signal from the velocimeter, which then becomes the fourth output from the electronics unit.

These outputs from the electronics unit are fed into four channels of a Sangamo 3500 tape recorder located in a separate watertight case, marked recorder unit in Fig. 14. The automatic sequence control electronics, also in the recorder unit, are connected to the externally mounted initialization switch.

The 30 Vdc power needed for the Sangamo tape recorder is provided by a series connection of one 6 V and two 12 V automobile batteries. The sum amplifier and multiplexer are directly powered by the 12 Vdc. The 12 Vdc is also fed into an 8 Vdc regulator which provides power for the preamplifiers. The AD-YU amplifiers are powered by a bank of dry cells totaling 24 V, which are mounted inside the watertight electronics unit. The automobile batteries, mounted in individual water protective plastic cases, are wired for charging through the connection as shown in Fig. 14.

d. OAS Hydrophone System

1) OAS Hydrophone

The ARL-253-2 hydrophone is a prototype of the AN/WQS-1 constructed by ARL as an obstacle avoidance sonar (OAS) for free-flooded submersible swimmer delivery vehicles. The final version of the AN/WQS-1 contains smaller square elements in an array pattern different from this prototype. The OAS array configuration used in flow noise tests, shown mounted on a 1:12 strut in Fig. 15 and represented in Fig. 16, is mounted on the curved surface of a right

FOR OFFICIAL USE ONLY

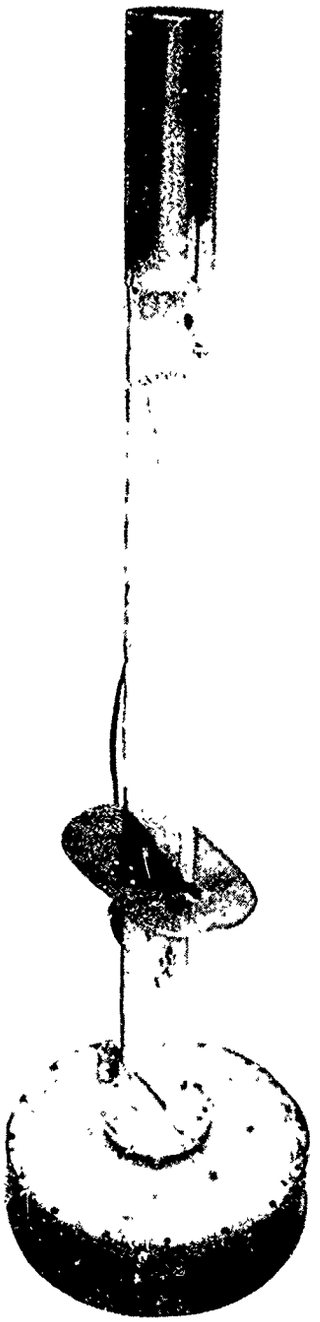

FIGURE 15
OAS HYDROPHONE MOUNTED ON A 1:12 PLATE STRUT

FOR OFFICIAL USE ONLY

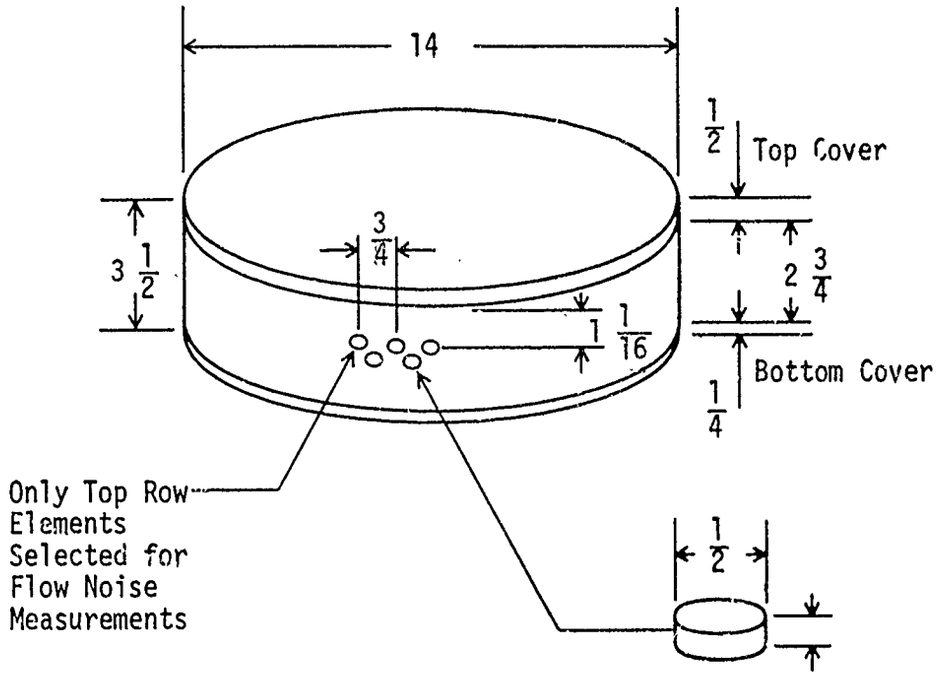

All dimensions are in inches

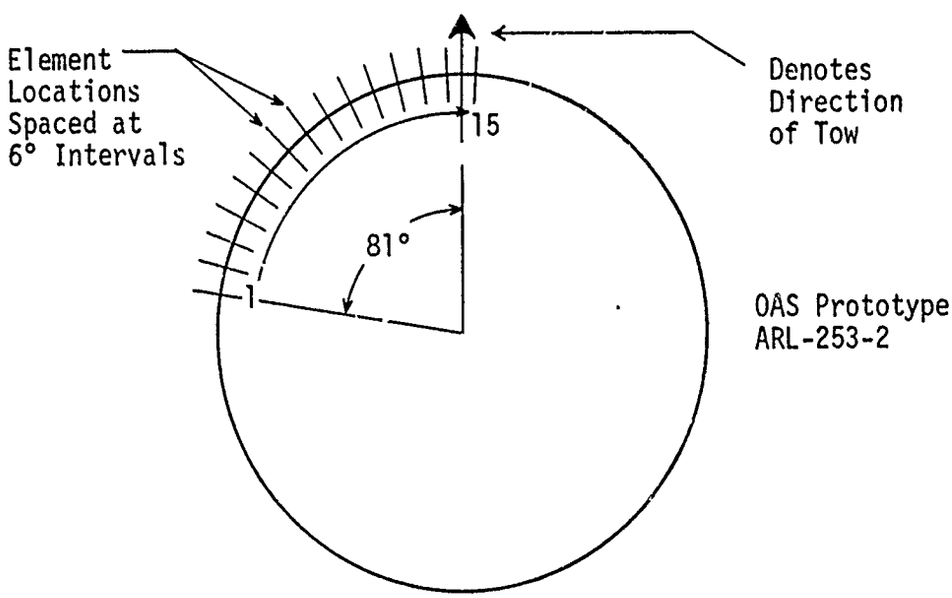

FIGURE 16

DETAIL OF OAS ARRAY AND ELEMENT NUMERATION

AS-74-1574
CWD-1117-3

FOR OFFICIAL USE ONLY

cylinder, which has a 14 in. diam and a 2 3/4 in. height. The prototype array is composed of two rows of 1/2 in. diam disk elements which are resonant at 200 kHz. The individual elements exhibit a sensitivity of -185 dB re 1 V/μPa. The beam pattern presented in Fig. 17 shows a beamwidth of 74°. Note the element is a disk, so the patterns shown are essentially symmetric about the axis of the disk element. Fifteen of these elements from the top row, spanning an 84° sector of the cylinder, were selected for flow noise measurements. The separation of the elements is 3/4 in., and they are located 1 1/16 in. from the top edge of the OAS housing. To measure flow noise, it was necessary to construct two lids: one to make the bottom watertight, and the other to seal the top and to provide a mount for the strut. The upper lid was 1/2 in. thick, the lower, 1/4 in. thick. As shown in Fig. 16, the elements were mounted on intervals of 6° around the cylindrical body. An arbitrary element numbering system was assigned, with element 1 as the element closest to the side of the array, and elements 14 and 15 straddling the front of the hydrophone. Flow noise measurements were performed with the tow direction indicated by the arrow between elements 14 and 15, as represented in Fig. 16.

2) OAS Electronics

The preamplifiers used in the ARL-300 measurements were not applicable to the OAS measurements, because they were bandpassed for 100 kHz operation. The OAS preamplifiers mounted within the housing were used. The OAS preamplifiers have a 20 kHz bandwidth centered at 200 kHz, and they were set for a gain of 60 dB, which increased the gain of the predetected signals by 20 dB over that of the ARL-300 measurements (70 dB amplification for ARL-300 signals versus 90 dB for the OAS). The signals from the OAS preamplifiers were used as inputs to the electronics described for the ARL-300 system; specifically, they were used as inputs to the AD-YU amplifiers represented in Fig. 14.

FOR OFFICIAL USE ONLY

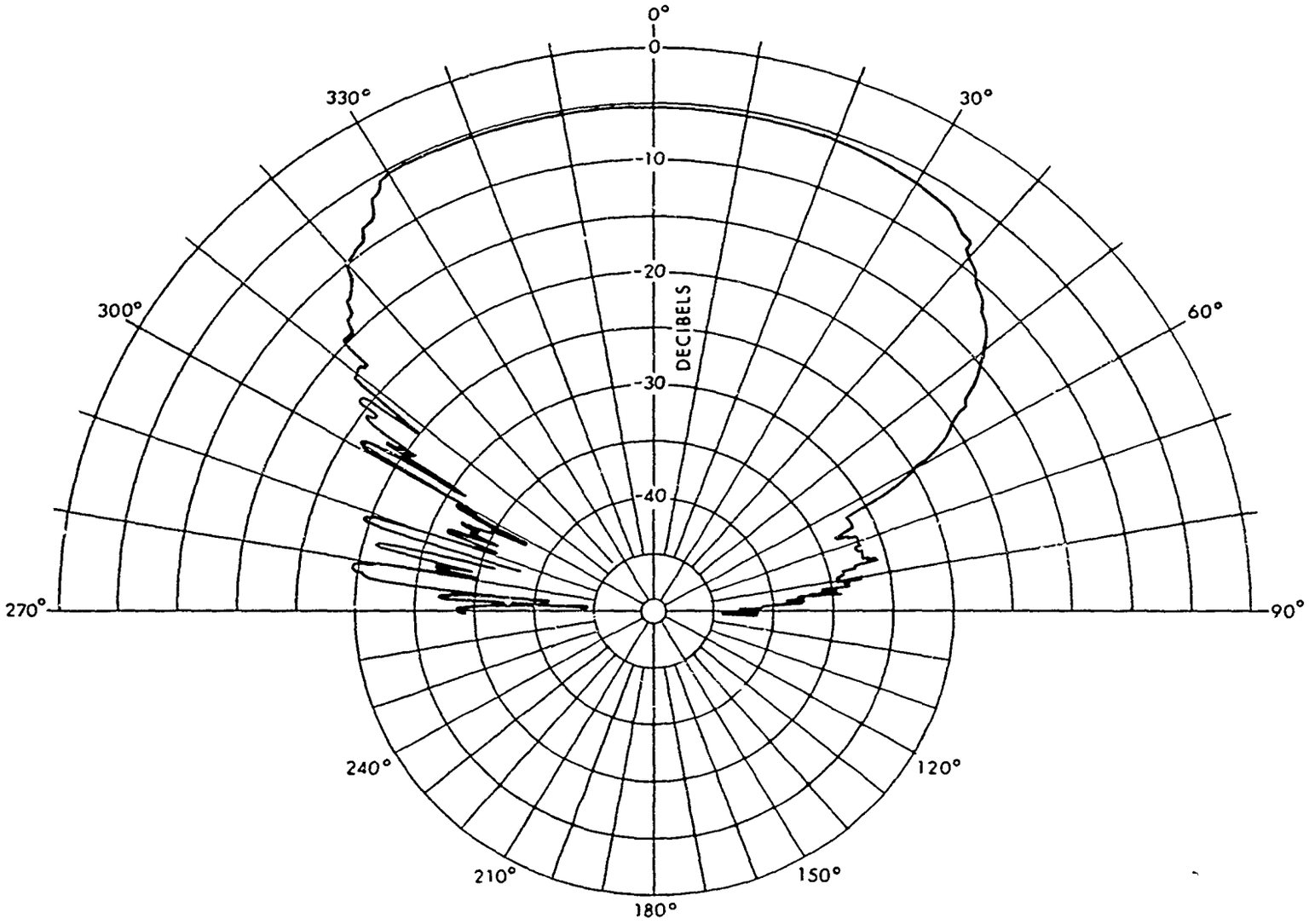

FIGURE 17
BEAM PATTERN FOR ONE ELEMENT OF OAS HYDROPHONE 200 kHz

FOR OFFICIAL USE ONLY

e. Lens Hydrophone System

1) Lens Hydrophone

The lens hydrophone is an experimental minehunting sonar provided by Naval Coastal Systems Laboratory (NCSL). It consists of a fluid-filled cavity which focuses the incoming sound waves on an array of PZT elements. The housing, a right cylinder which is 20.5 in. in diameter by 3 3/4 in. in height, is pictured in Figs. 18 and 19. The window opening, observed in Figs. 18 and 19 and represented in Fig. 20, is 1 1/2 in. in height and extends across the 180° forward sector of the hydrophone. The window material and gasket shown in Fig. 19 are clamped firmly to the housing to contain the lens fluid, designated as FC75 fluid. As represented in Fig. 20, the element array can be moved along the rear radius of the housing in order to place the elements at the focal plane of the lens. The elements, as shown in the array detail of Fig. 20, are about 1/4 in. square by 1 in. high; the long axis of the elements is aligned with the axis of the cylindrical housing. Elements 1, 3, and 4 were resonant at 112 kHz with a 1.8 kHz bandwidth. Element 2 exhibits a 100 kHz center frequency and a 2 kHz bandwidth.

A symmetrical set of beam patterns of the four elements (Fig. 21) shows the adjacent 2° beams formed by this hydrophone scheme. These beam patterns were taken in 78°F fresh water at LTTS. The hydrophone sensitivity using element 1 was measured to be -156 dB re 1 V/μPa. The sensitivity using the other three elements can be inferred from the superimposed beam patterns in Fig. 21. Due to the focusing properties of the lens hydrophone, the individual elements exhibit a 29 dB higher output than that of an individual element of the ARL-300 line array.

FOR OFFICIAL USE ONLY

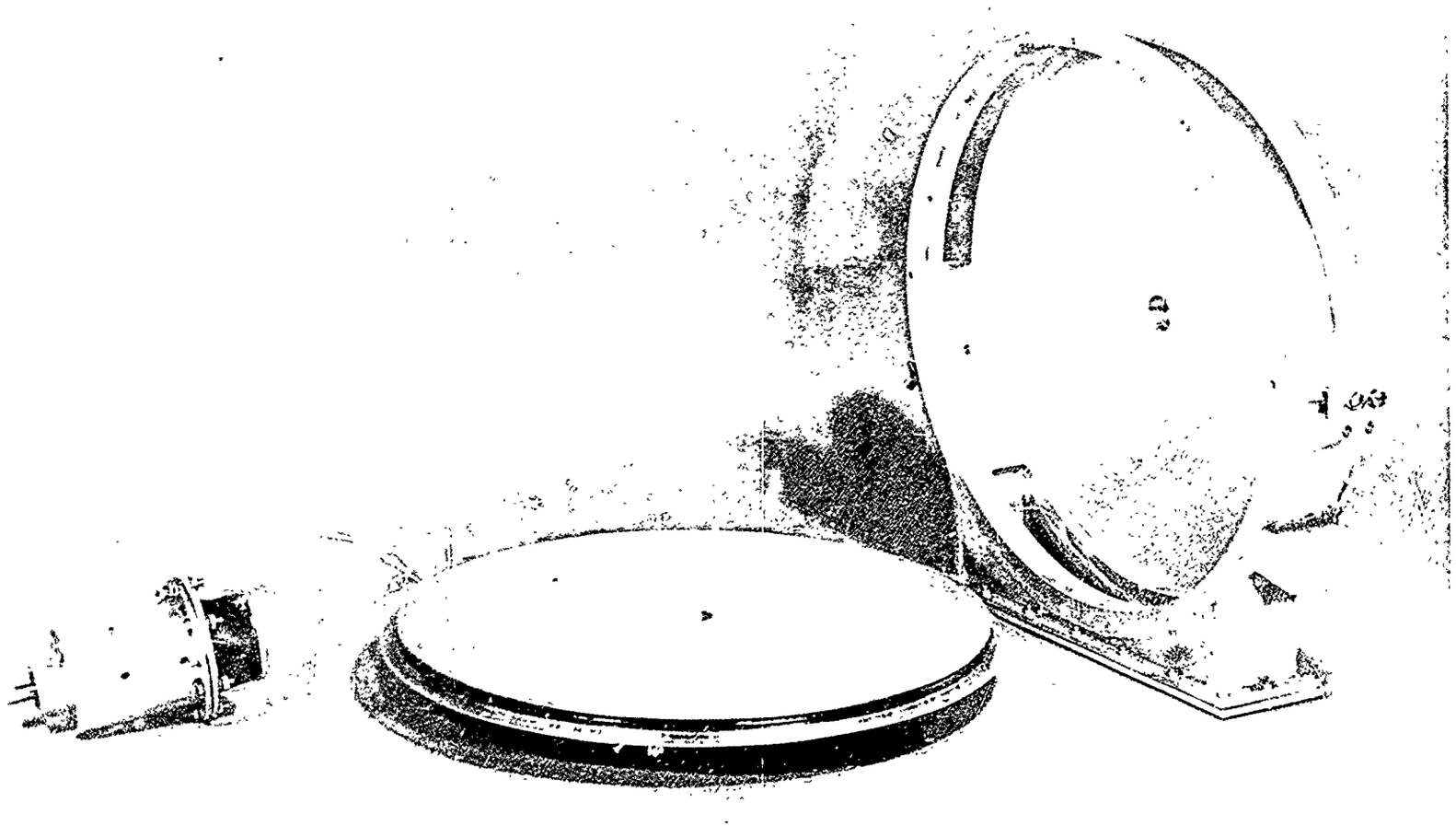

OFFICIAL U.S NAVY PHOTOGRAPH

FIGURE 18
LENS HYDROPHONE HOUSING

FOR OFFICIAL USE ONLY

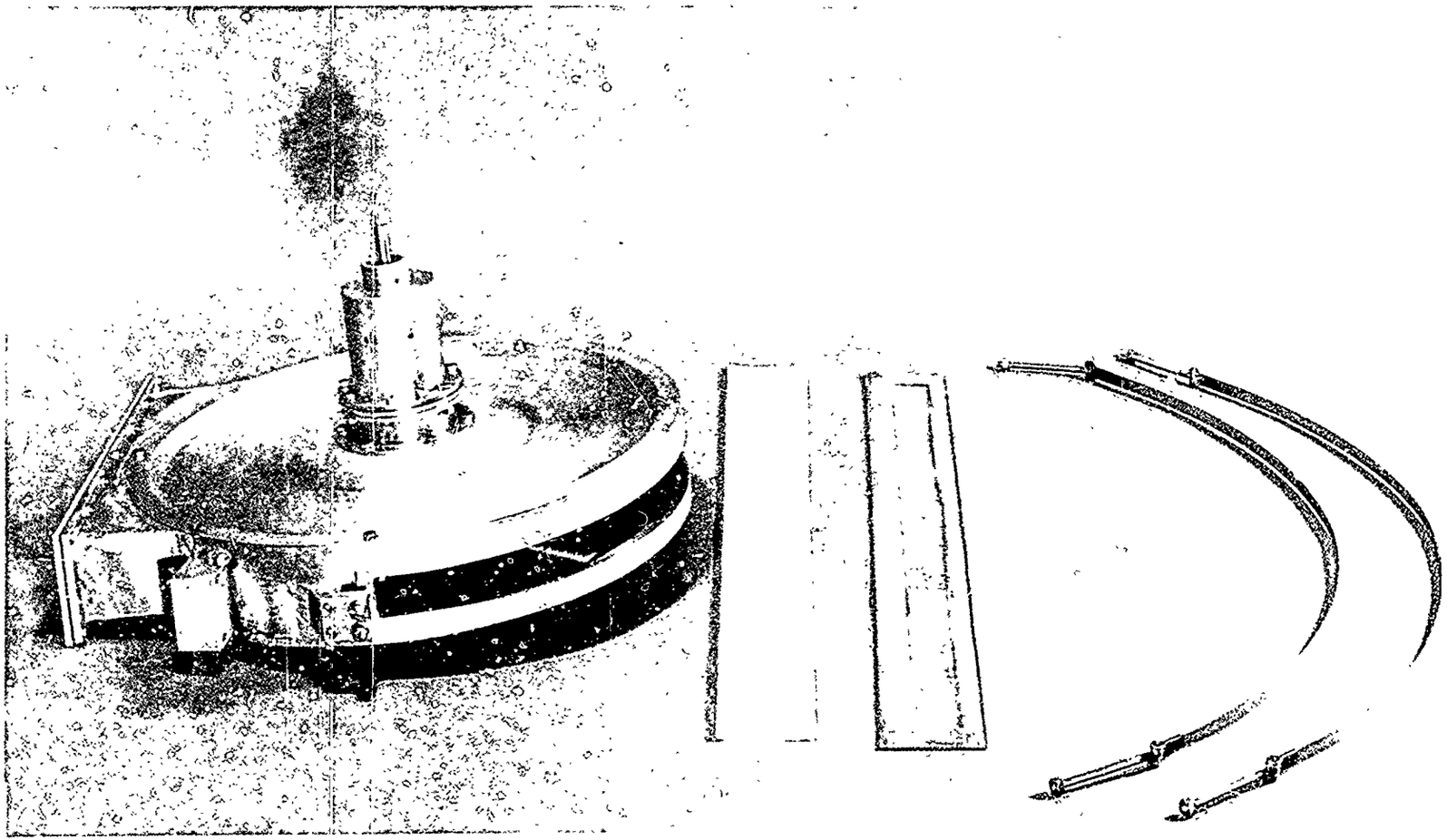

OFFICIAL U.. NAVY PHOTOGRAPH

FIGURE 19
LENS HYDROPHONE HOUSING AND WINDOW

FOR OFFICIAL USE ONLY

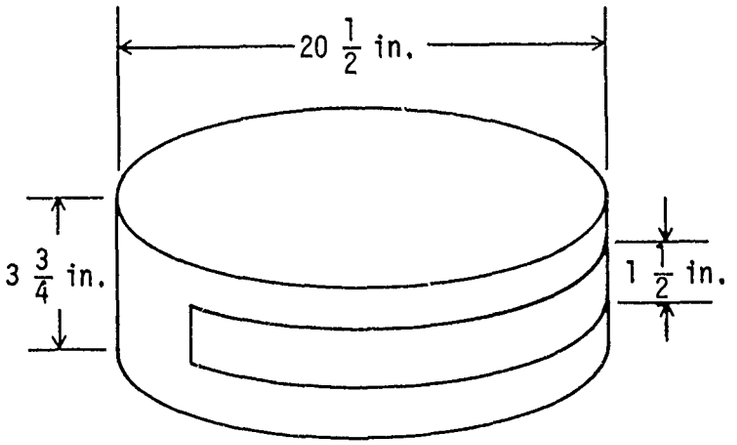

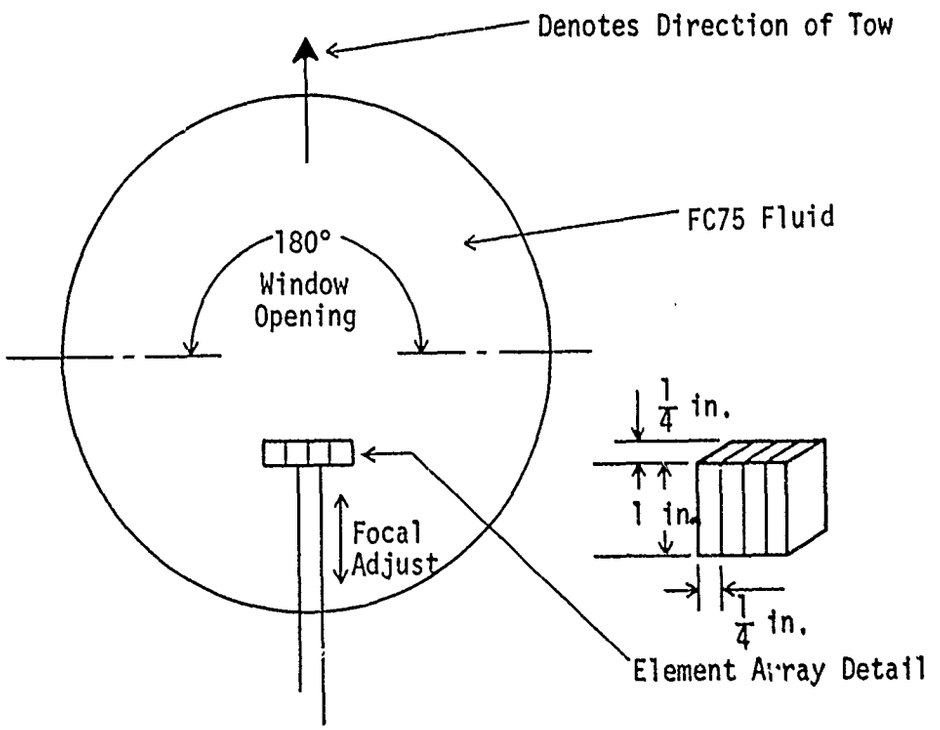

FIGURE 20

HOUSING AND ELEMENT ARRAY DETAIL FOR LENS HYDROPHONE

AS-74-1567
CWD-1117-3

FOR OFFICIAL USE ONLY

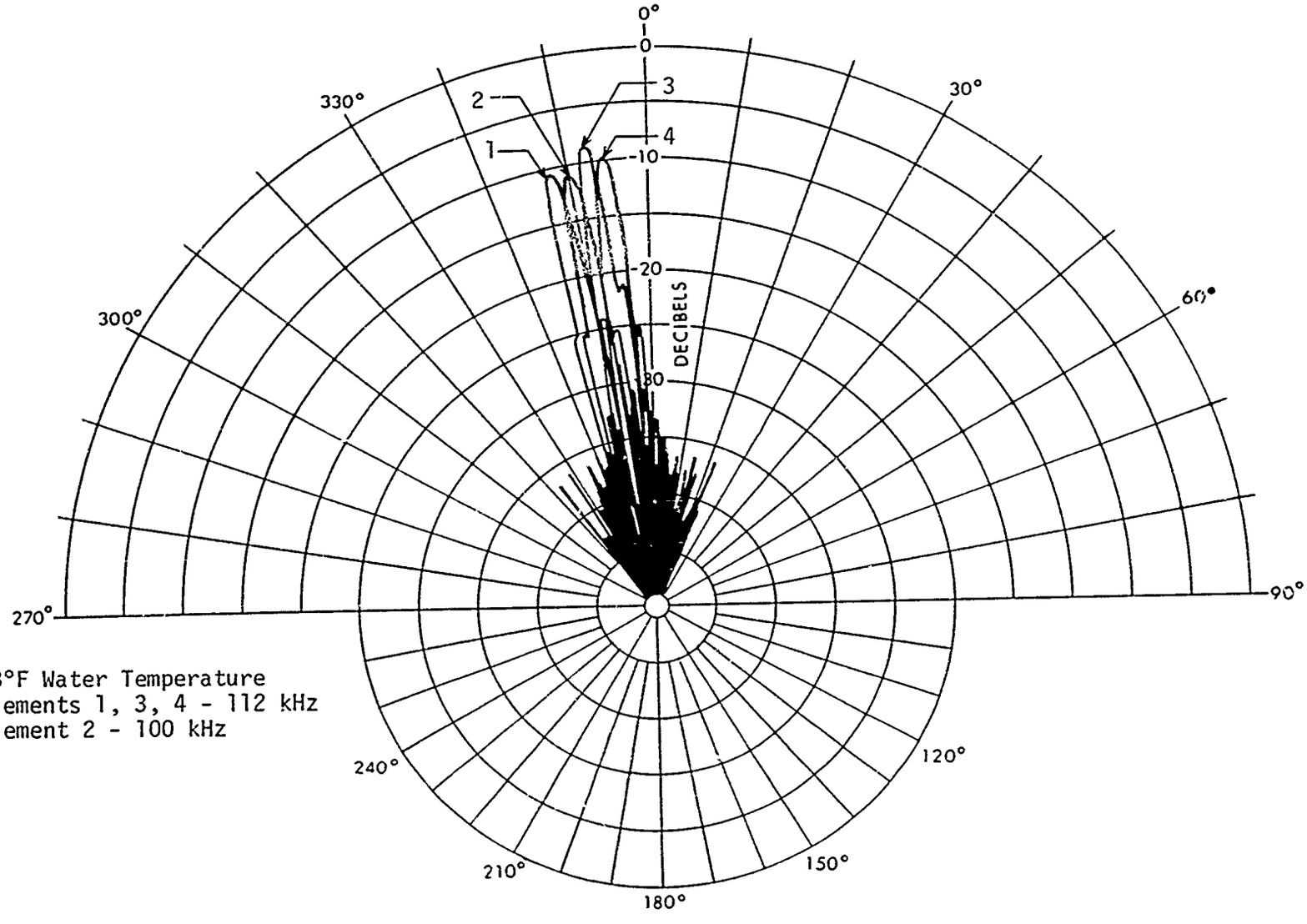

78°F Water Temperature
Elements 1, 3, 4 - 112 kHz
Element 2 - 100 kHz

FIGURE 21

SUPERIMPOSED BEAM PATTERNS FOR THE 4-ELEMENT LIQUID LENS ARRAY, 100 and 112 kHz

FOR OFFICIAL USE ONLY

2) Lens Electronics

Since the lens element output is 29 dB higher than that of the ARL-300 and OAS hydrophone elements and since the 112 kHz resonant frequency lies outside the bandpass of the readily available 100 kHz filter, a preamplifier was not used. The signals from the elements were patched into the electronics system at the inputs of the AD-YU amplifier in the same manner as for the OAS. The outputs of the four elements were amplified and recorded on four separate channels of the Sangamo 3500 recorder without use of a multiplex scheme. The overall gain of the system was determined experimentally through input of known signal levels and measurement of those signal levels at various stages of gain throughout the data acquisition system.

B. Data Reduction Procedures

Tapes recorded on the Sangamo 3500 on board the flow noise platform were removed at the end of each day. While further data runs were being made at the lake, the tapes were played back by a Honeywell 7600 at ARL's main laboratory. The detected sum data and platform speed information were recorded directly on a Clevite Bush Mark 620 strip chart recorder. The multiplexed channel and multiplex clock served as inputs to a digital demultiplexer. The 15 separated outputs were then recorded on the strip chart recorder.

By visual inspection of the strip chart recordings, various data runs were selected for digitization and analysis on the HP 9810 calculator and the CDC 3200 computer.

FOR OFFICIAL USE ONLY

PRECEDING PAGE BLANK-NOT FILMED

III. MEASURED FLOW NOISE

During the period of work covered by Contract N00024-73-C-1117, Task 0003 (March 1973 through February 1974), flow noise measurements have been performed on three hydrophones. These are the ARL-300 flow noise hydrophone, constructed by ARL for this flow noise study; the ARL-253-2 hydrophone, an OAS prototype of the AN/WQS-1 constructed by ARL as an obstacle avoidance sonar; and a lens hydrophone, FC75 fluid filled, provided by NCSL.

A. ARL-300 Hydrophone

The basic preamplifier used in the ARL-300 hydrophone system, described in detail in an earlier section, contains a 100 kHz filter with a 10 kHz bandwidth. The individual sensitivity of the elements is -185 dB re 1 V/μPa, with a variation of ±1 dB. The data presented for this hydrophone have been corrected to a 1 Hz bandwidth.

1. FNSPL Variation Due to Array to Dome Separation

A comparison of flow noise sound pressure level (FNSPL), plotted as a function of speed for three array positions behind a cylindrical dome on the ARL-300 hydrophone housing (pictured in Fig. 4 and represented in Fig. 9, using the 1:4 wedge strut shown in Fig. 5) is presented in Fig. 22. Position C2 is for the array at the position closest to the dome and C4 is for the array at the position farthest from the dome. These data represent the average of the outputs of all 15 elements of the subarray P5 (see Fig. 10). The average of this line was chosen to minimize any variation along the axis of the hydrophone. The maximum speed at which the flow noise platform could be towed with this hydrophone-strut configuration was 18 kt. The minimum detectable

FOR OFFICIAL USE ONLY

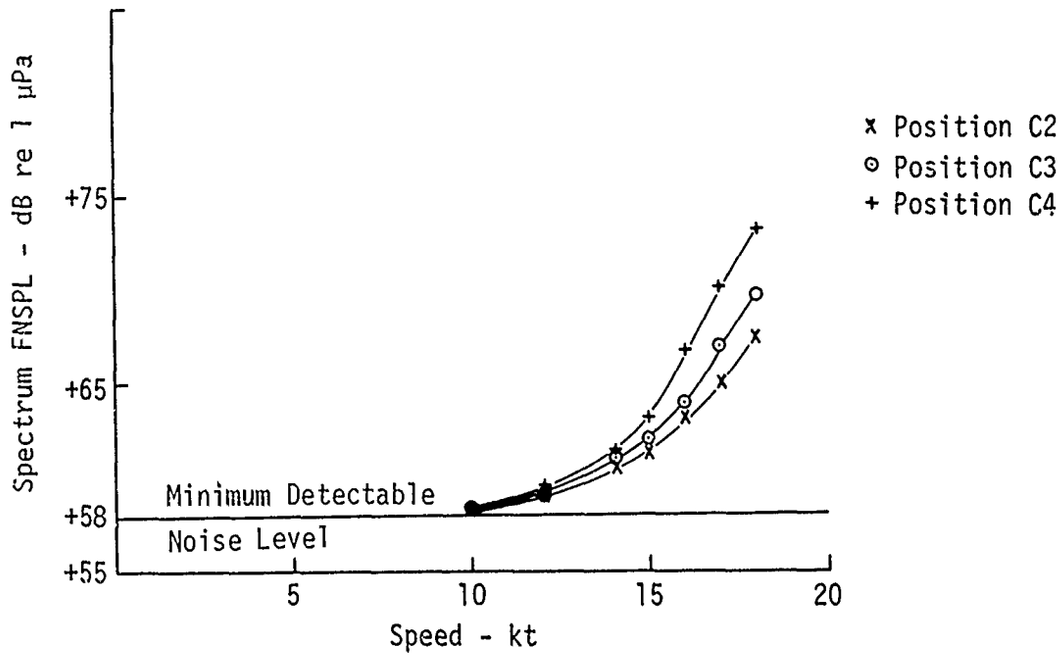

Average of All Elements of Subarray P5

FIGURE 22

FNSPL VERSUS SPEED, DOME TO ARRAY SEPARATION AS A PARAMETER: ARL-300 HYDROPHONE, CYLINDRICAL DOME HOUSING, 1:4 WEDGE STRUT, 100 kHz, 10 kHz BANDWIDTH

AS-74-1578
CWD-1117-3

FOR OFFICIAL USE ONLY

noise level is set by the breakover point of a diode in the detector circuit that converts the noise signal into a dc level for multiplexing and recording; the process is outlined on the block diagram in Fig. 14.

Further data showing the effect of array to dome separation are presented for the case of the streamlined dome configuration of the ARL-300 hydrophone housing supported by a 1:12 plate strut (shown in Fig. 6 and represented in Fig. 9). Data from two positions, labeled S1 and S3 in Fig. 9, are presented in Fig. 23. Maximum speed achieved in this configuration was 19 kt. The data are again the average of 15 elements of the P5 subarray.

Note the variation in FNSPL at 18 kt (Fig. 22) with the cylindrical dome is a 3 dB/in. change in dome to array separation (Fig. 9), while in the case of the streamlined dome the variation at 18 kt (Fig. 23) is only a 0.5 dB/in. change. Also note that for the case of the FNSPL at 18 kt for the array located in position 3 (the physical location within the hydrophone housing is the same for both dome configurations), the streamlined dome is 10 dB quieter than the cylindrical dome.

The one-half scale geometrical presentation of the ARL-300 hydrophone presented in Fig. 9 can be used to determine

(1) the dome area seen by a center element in each array position,

(2) the distance of element face from onset of cavitation point (arrow denoting t_{max} in Fig. 9), and

(3) (in conjunction with the element beam pattern in Fig. 11) the effect of the relative intensity of direct path radiation from the cavitation onset point to the center element in each array position. Note that the angular geometrical locations of the point of cavitation with respect to the center elements of subarray P5, as shown in Fig. 8 for each array position, are marked on the beam pattern presented in

FOR OFFICIAL USE ONLY

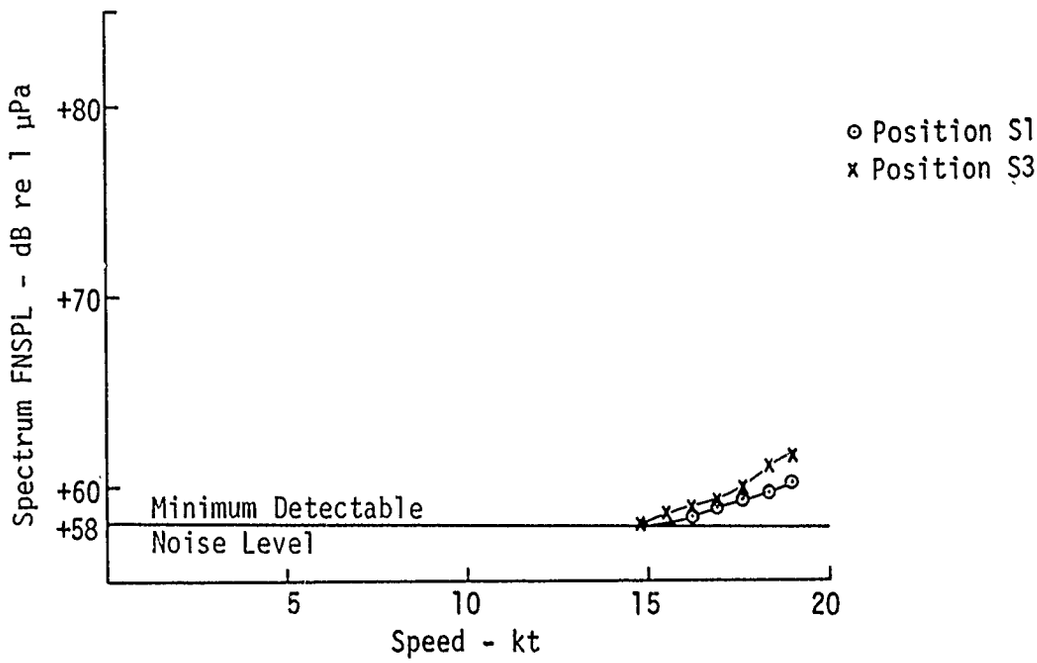

Average of All Elements of Subarray P5

FIGURE 23

FNSPL VERSUS SPEED, DOME TO ARRAY SEPARATION AS A PARAMETER:
ARL-300 HYDROPHONE, STREAMLINED DOME HOUSING, 1:12 PLATE STRUT,
100 kHz, 10 kHz BANDWIDTH

AS-74-1579
CWD-1117-3

FOR OFFICIAL USE ONLY

Fig. 11. In the case of the streamlined body, the separation between the center element and cavitation onset point, for array positions S1 and S3, is 2.7 in. and 2.0 in., respectively. For the cylindrically domed body, the separation between center element to cavitation onset point for array positions C2, C3, and C4 is 2.2 in., 2.0 in., and 2.3 in., respectively. Since the distances are not very different, the main criteria for calculation of relative sound pressure level would be the amount of attenuation caused by the element's directivity. The use of the farfield beam pattern, Fig. 11, for noise sources located at a distance of 2 to 4 in., well inside the nearfield, is not completely correct, but is used here as a rough approximation. If the noise source were a point located at the calculated point of the onset of cavitation (Fig. 9), the attenuations relative to position C4 (Fig. 11) would be 14.5 dB for C3 and 24.5 dB for C2. As can be seen in Fig. 22, the measured FNSPL at 18 kt relative to C4 was 3 dB lower for C3 and 6 dB lower for C2. It would be interesting to set up an integration problem, using the directivity effects (Fig. 11) and assuming a reasonable degree of correlation, integrating the effects of noise sources spreading ahead of the onset of cavitation point across the cylindrical dome (Fig. 9) until the point is reached at which the relative theoretical levels for C3 to C2 reach 3 dB and 6 dB separations, respectively. With certain simplifying assumptions, this integration could give a rough idea of the locations on the dome of flow noise sources at 18 kt.

As can be seen in Fig. 11, the attenuation for a point source located at the point of onset of cavitation on the streamlined dome body for positions S1 and S3 is 7 dB. The actual measurements involving the sum of all the noise sources at 18 kt in Fig. 13 indicate a 1.5 dB relative attenuation between S1 and S3.

Note that the cylindrical dome data provided in Fig. 22 cannot be directly compared to the streamlined dome data in Fig. 23 to determine the effect of the dome on FNSPL because the strut shapes used in the two data gathering procedures were different and significantly affect the FNSPL, as presented in the following sections.

FOR OFFICIAL USE ONLY

2. FNSPL Data Comparison Between Bare Face and Cylindrical Dome Configurations

FNSPL data taken with the bare face and cylindrical dome configuration of the ARL-300 hydrophone mounted on a 1:4 strut are plotted versus speed in Fig. 24. The data presented are again the average of the 15 elements of P5 and the array is mounted in position 3, Note that at 17 kt the cylindrical dome is 8 1/2 dB quieter than the bare face. The maximum speed limit in each case is the maximum speed at which the flow noise platform could be towed with that particular hydrophone-strut configuration.

3. FNSPL Data Comparison Between Bare Face and Streamlined Dome Configurations

FNSPL data taken with the bare face and streamlined dome configurations of the ARL-300 hydrophone mounted on a 1:12 plate strut as a function of speed are shown in Fig. 25. The data shown are the average of the 15 elements of the P5 subarray with the array in position 3. Note that at 17 kt the streamlined dome is 15 dB quieter than the bare face configuration.

4. FNSPL Attributable to Strut Configuration

As can be observed through comparison of the data of Figs. 24 and 25 that have been replotted in Fig. 26, the FNSPL plot versus speed for the bare face configuration of the ARL-300 hydrophone is a function of strut shape. Both sets of data were taken under identical conditions with one exception, which was the strut shape. Both sets of data are averages of the data from the 15 elements of subarray P5 with the array mounted in position 3. The greatest variation of 8 dB occurs at 14 kt. The two levels are about the same at 9 kt, diverge to 8 dB difference at 14 kt, and then converge to a difference of 2 dB at 17 kt. Convergence, if extrapolated, would occur at approximately 18 kt.

FOR OFFICIAL USE ONLY

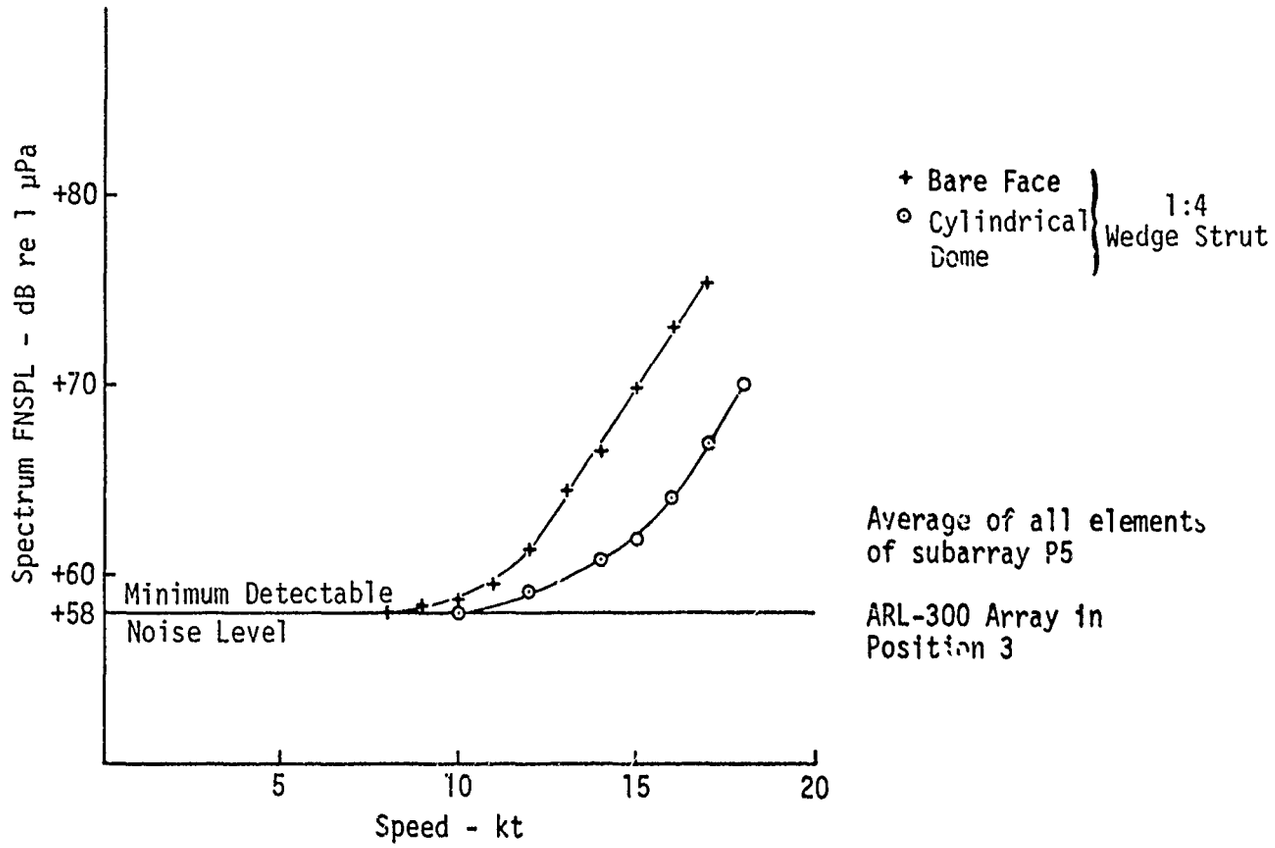

FIGURE 24

FNSPL VERSUS SPEED, BARE FACE AND CYLINDRICAL DOME COMPARISON: ARL-300 HYDROPHONE, 1:4 WEDGE STRUT, 100 kHz, 10 kHz BANDWIDTH

AS-74-1580
CWD-1117-3

FOR OFFICIAL USE ONLY

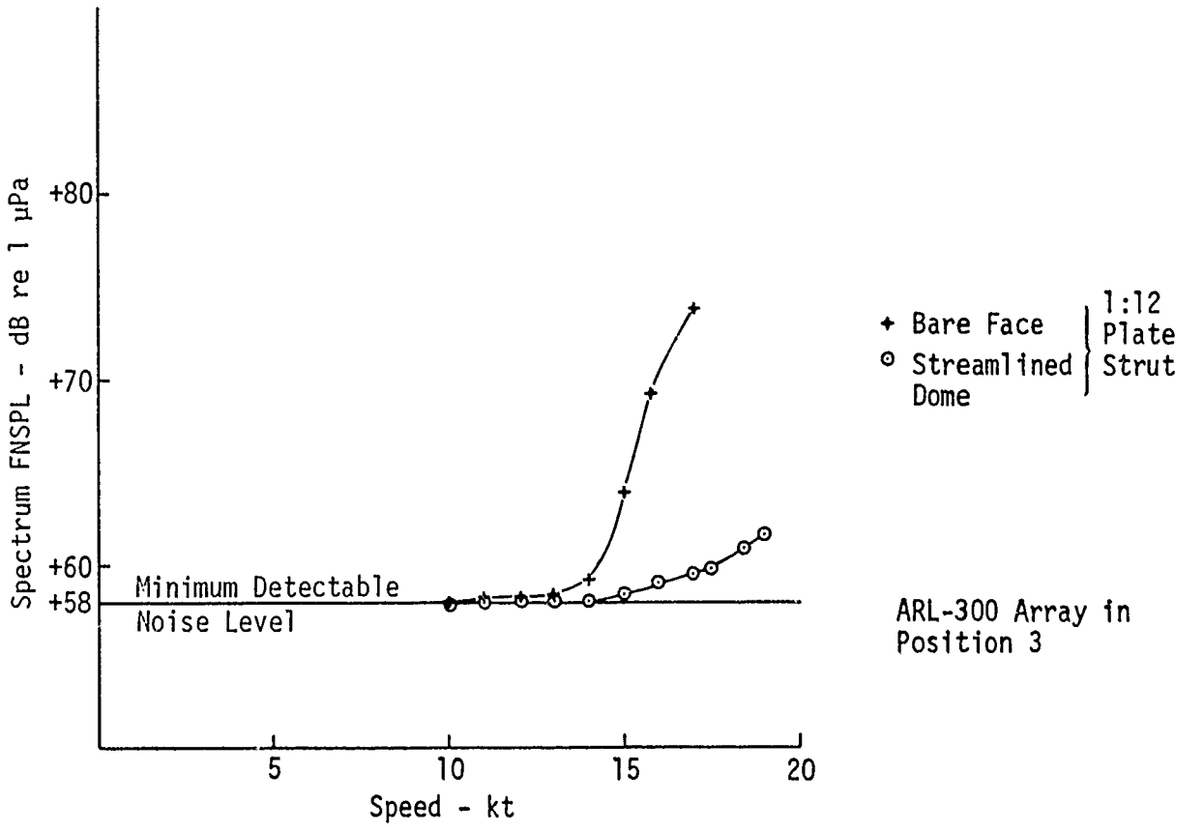

Average of All Elements in Subarray P5

FIGURE 25

FNSPL VERSUS SPEED, BARE FACE AND STREAMLINED DOME COMPARISON: ARL-300 HYDROPHONE, 1:12 PLATE STRUT, 100 kHz, 10 kHz BANDWIDTH

AS-74-1581
CWD-1117-3

FOR OFFICIAL USE ONLY

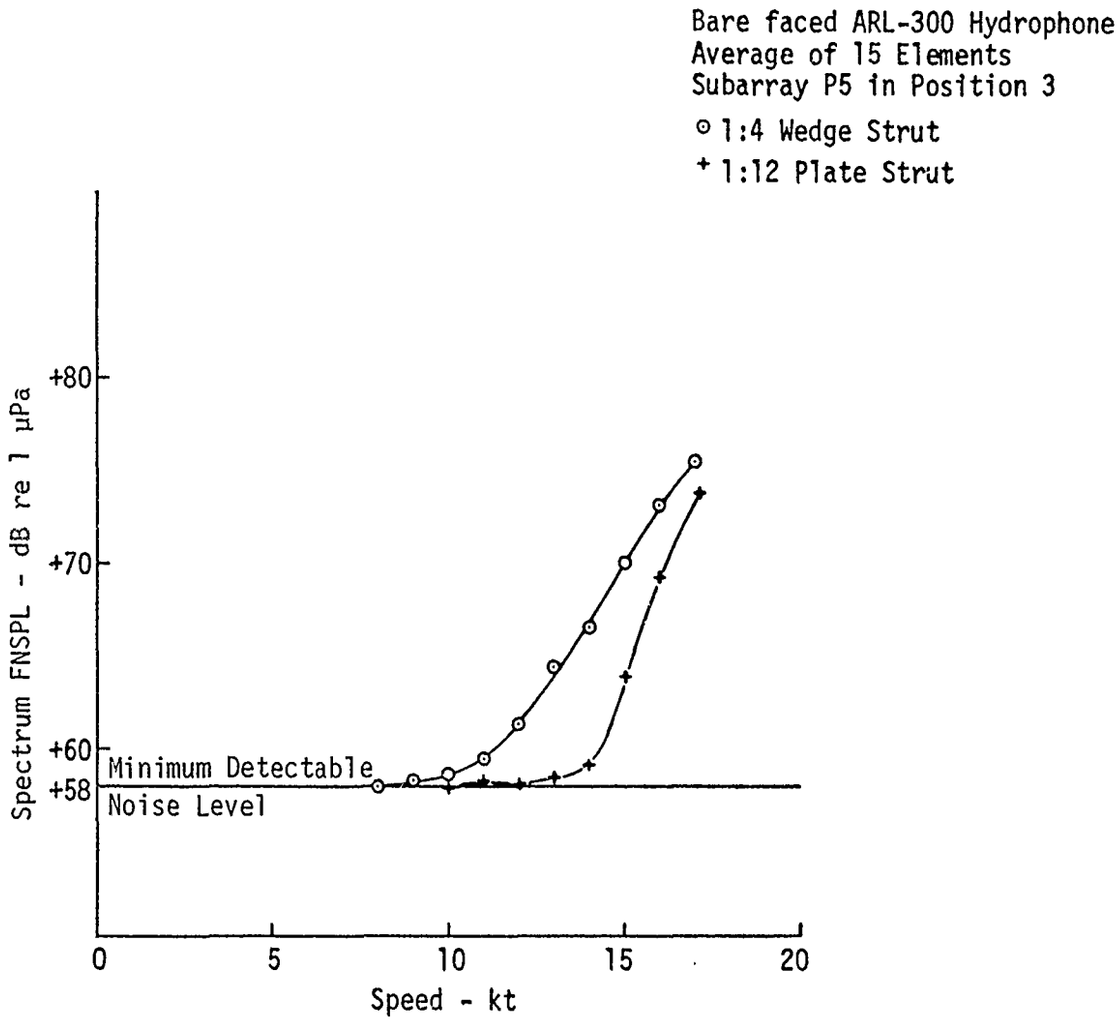

FIGURE 26

FNSPL VERSUS SPEED, 1:4 WEDGE AND 1:12 PLATE STRUT COMPARISON:
BARE FACE ARL-300 HYDROPHONE, 100 kHz, 10 kHz BANDWIDTH

A possible source of this FNSPL variation with strut shape is the air cavity behind the strut, which is caused by ventilation. The speed at which this cavity extends all the way down to the hydrophone housing is dependent upon the shape of the strut and the depth of the housing. The critical velocity at which this occurs may be calculated from the formula[8]

$$V_{critical} = F_h \sqrt{g \times h} \quad ,$$

where $V_{critical}$ is the velocity at which the ventilation cavity behind the strut reaches h, and where F_h, the Fronde number, is given by

$$F_h^2 = \frac{2}{\left|C_{pmin}\right|} \quad ,$$

using

C_{pmin} = minimum pressure coefficient around strut calculated from potential flow theory,

g = gravitational constant, and

h = distance from water surface to hydrophone housing.

The critical velocities for three shapes of struts calculated for h=2.5 ft, the depth used in this flow noise study, are presented in the table below.

CRITICAL VELOCITIES

Strut Shape	C_{pmin}	F_h	$V_{critical}$
Cylindrical	-0.62	1.8	9.7 kt
1:4 wedge	-0.35	2.4	13.0 kt
1:12 plate	-0.10	4.5	24.3 kt

This calculation for the case of the 1:4 wedge strut indicates the strut ventilation cavity reached the hydrophone housing at 13.0 kt.

FOR OFFICIAL USE ONLY

This result means that the FNSPL versus speed data presented in Figs. 22 and 24, taken with the 1:4 wedge, had a ventilation cavity riding on the top of the hydrophone casing, or deeper, for all speeds greater than 13.0 kt. In addition, since this cavity size increases with speed, there should be more noise as the speed increases. In the case of the bare face hydrophone, a direct measurement of the noise difference between the 1:4 wedge and 1:12 plate struts is available. (See Fig. 26.) This noise difference may be attributable to a ventilating cavity that is present in the case of the 1:4 wedge strut data but is absent for the 1:12 plate strut data. The sharp noise increase in the 1:12 strut data at 14 kt can be attributed to the pressure fluctuation caused by the bare face hydrophone configuration.

Note that the calculation for critical speeds for penetration of the surface ventilating cavity to a depth of 2.5 ft was based on the strut alone. The added effects of a hydrophone housing mounted on the end were ignored.

Statistically, the noise measurement near the minimum detectable noise levels represented in Figs. 22 through 28 can be considered suspect. The following two factors enter into this.

(1) Statistical averages of samples near the detection limit lines will begin to be averages only of the data points in the high range of values; therefore, the averages will tend to be higher than the averages taken over data points not near such a detection boundary for which the entire range of values is averaged.

(2) The minimum detect level in an electronic system is normally limited by a system noise level. In the case of an acoustical signal of low level, near the level of the system noise, the measurement in absolute terms is really the sum of the acoustical and electrical system noise; thus the measured value can be higher than it should be.

In the particular design of this system, the minimum detectable noise level is not the system electronic noise limit, but is a level

FOR OFFICIAL USE ONLY

caused by a diode in the detector. This problem can be circumvented by similtaneously taking a second set of data with higher gain prior to detection. Keeping in mind the 20 dB dynamic range limitation of the tape recorder, this would permit the selection of a second 20 dB band of data overlapping the first. With proper selection of increased gain, this would produce a second band of data in which the higher set of values in the dynamic range would overlap the lower set of values in the first set of data, thus allowing observation of the effect on the points in question. A third possibility is that the data are true, and the curve in the lower levels of data is real and correct. However, this problem will have to remain unresolved for a time.

The difficulty with the data limitation stems from assumptions and design decisions made at the onset of this study. The use of a Sangamo 3500 tape recorder limited the dynamic range of the data to 20 dB. The maximum speed of the platform was limited due to the drag of hydrophone-strut combinations versus power winch capabilities. The choice of gain to be installed in the electronics was based on the limitation of 20 dB recorder dynamic range and on an estimate of probable FNSPL's at the higher speeds planned for towing the platform. Because the lower signal levels present at lower speeds were not of primary interest, the lower detect limit took the data almost out of the range of comparison with those data of the previous flow noise study.

B. OAS Hydrophone

The OAS hydrophone is described in an earlier section of this report. The shape of the housing and the location of the elements are presented in Fig. 16. Signals recorded from 15 selected elements of the OAS display a 20 kHz bandwidth centered at 200 kHz. The measured beam pattern of a single OAS element, a 1/2 in. diam PZT disk, exhibits a beamwidth of 73° at the -3 dB points (see Fig. 17) and a sensitivity of -185 dB re 1 V/μPa. The data are corrected to a 1 Hz bandwidth.

FOR OFFICIAL USE ONLY

For the case of the OAS hydrophone supported by a 1:4 average strut, FNSPL is plotted versus speed in Fig. 27. Figure 28 presents the FNSPL versus speed for the OAS hydrophone supported by a 1:12 plate strut. The variation in FNSPL as a function of position around the curved face of the hydrophone is indicated by the multiple plot on each graph of the FNSPL from six selected elements. As observed in the case of the ARL-300 measurement, data taken with the 1:4 wedge exhibit a higher FNSPL for speeds greater than 10 kt. At 15 kt the FNSPL difference is 7 to 8 dB. The data taken on the OAS are virtually the same for both struts at speeds up to 10 kt. The FNSPL became highly erratic and non-reproducible for speeds higher than 10 kt with the 1:4 wedge. No such erraticism was observed in data taken using the 1:12 plate strut. Note that the regularity and lower levels of the data taken with a 1:12 plate strut (see Fig. 28) compared to that from a 1:4 wedge strut (see Fig. 27) confirm that the 1:4 wedge strut was responsible for increases in FNSPL. At 15 kt in the forward direction, this level reduction amounts to 6 dB; at 11 kt, it amounts to 7 dB; while at 12 kt, it remained the same.

The FNSPL plotted as a function of position on the OAS hydrophone face with selected speeds as parameters and plotted for both strut configurations is presented in Figs. 29 and 30. In reference to Fig. 29, note the crossover between 11 and 12 kt. At 0°, forward position, FNSPL is higher for 11 kt than for 12 kt.

C. Lens Hydrophone

The shape of the lens housing and the locations of the elements are indicated in Fig. 20. Since the lens hydrophone is an experimental hydrophone, the elements are not identical. Elements 1, 3, and 4 exhibited a bandwidth of 1.8 kHz, centered at 112 kHz. Element 2 had a center frequency of 100 kHz with a bandwidth of 2 kHz. The hydrophone sensitivity using element 1 was measured to be -156 dB re 1 V/μPa; the sensitivity using the other elements can be inferred from the beam pattern in Fig. 21.

FOR OFFICIAL USE ONLY

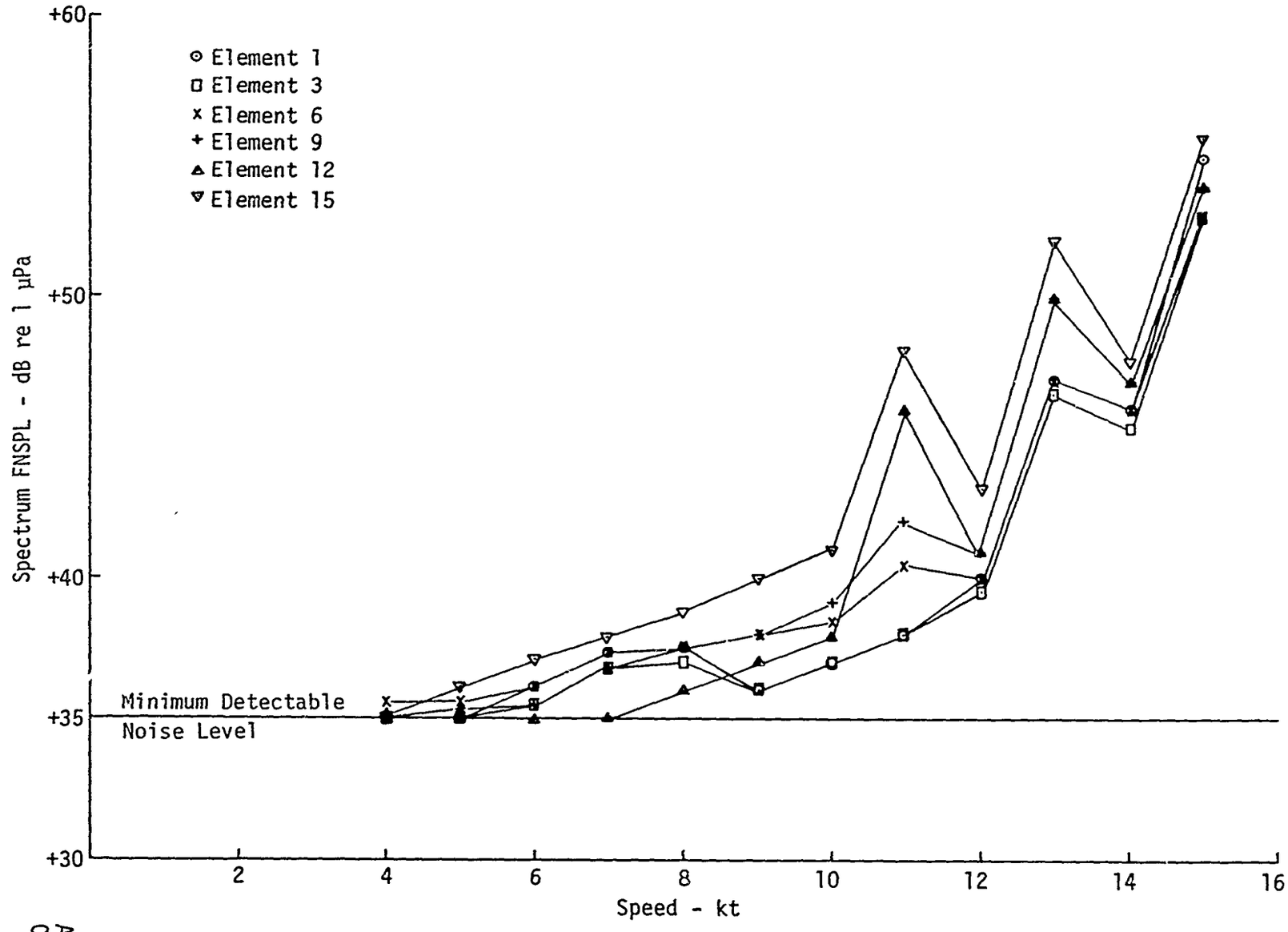

FIGURE 27

FNSPL VERSUS SPEED, OAS HYDROPHONE, 1:4 WEDGE STRUT, 200 kHz, 20 kHz BANDWIDTH

FOR OFFICIAL USE ONLY

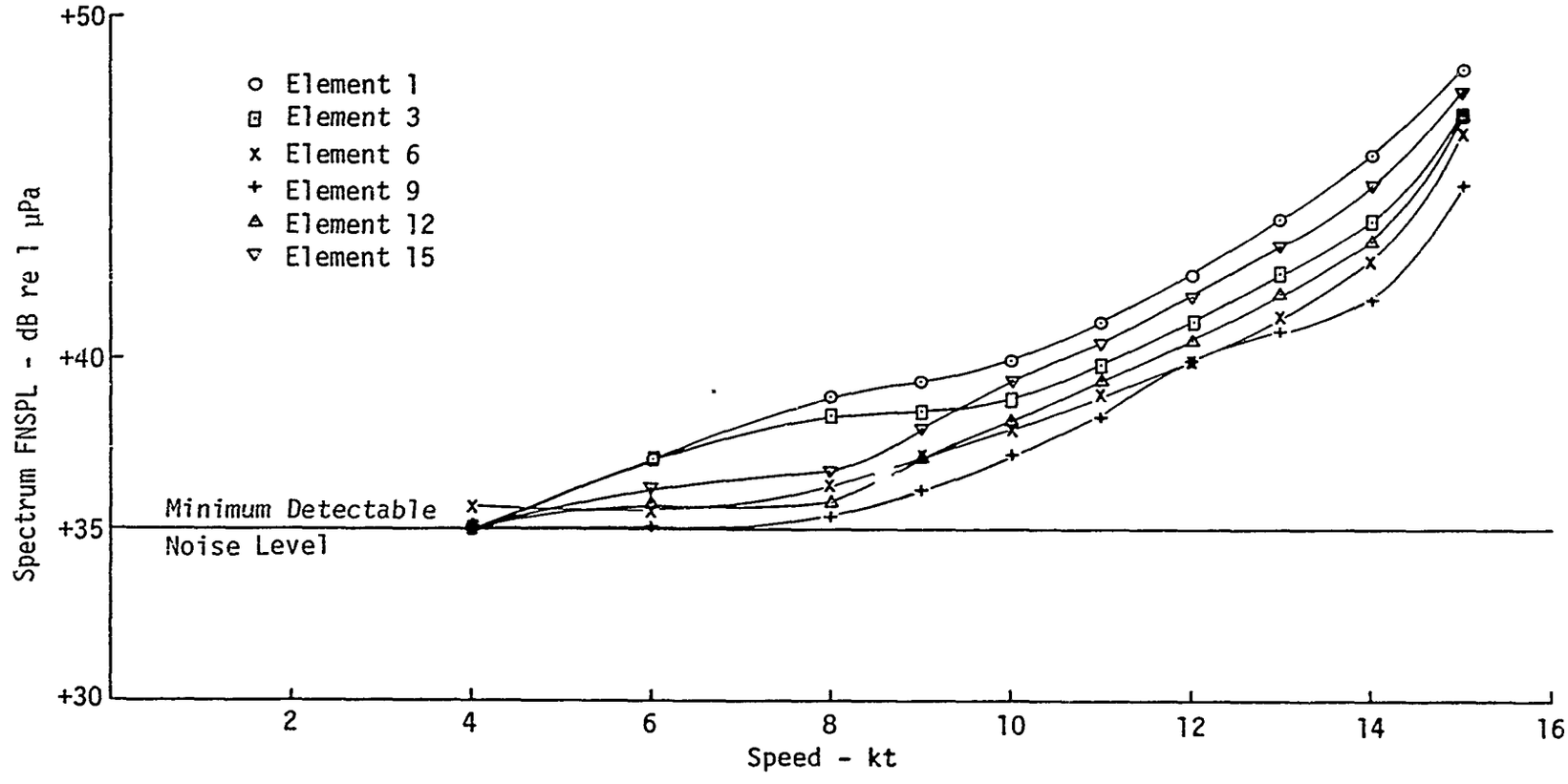

FIGURE 28

FNSPL VERSUS SPEED, OAS HYDROPHONE, 1:12 PLATE STRUT, 200 kHz, 20 kHz BANDWIDTH

FOR OFFICIAL USE ONLY

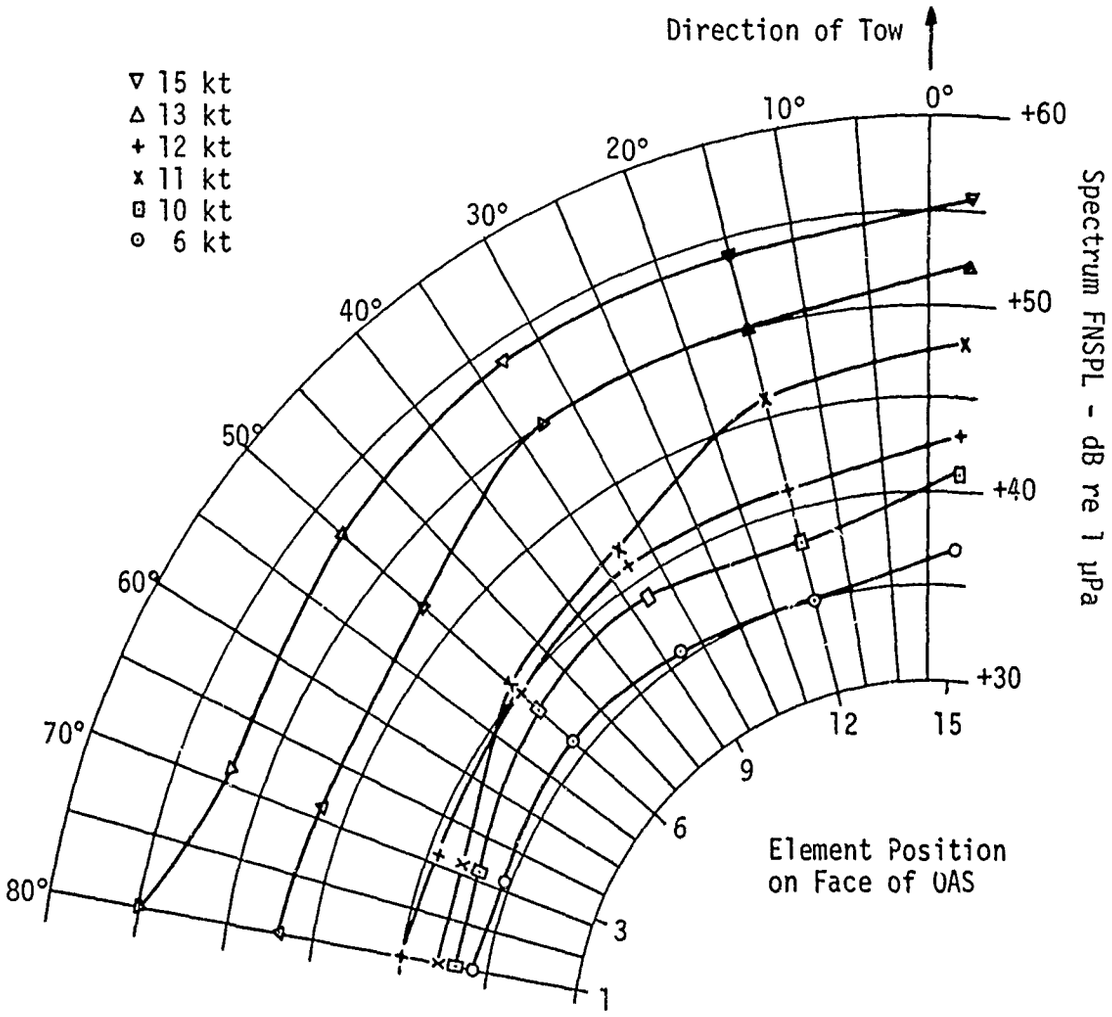

FIGURE 29

FNSPL VERSUS ELEMENT POSITION, SPEED AS A PARAMETER,
OAS HYDROPHONE, 1:4 WEDGE STRUT

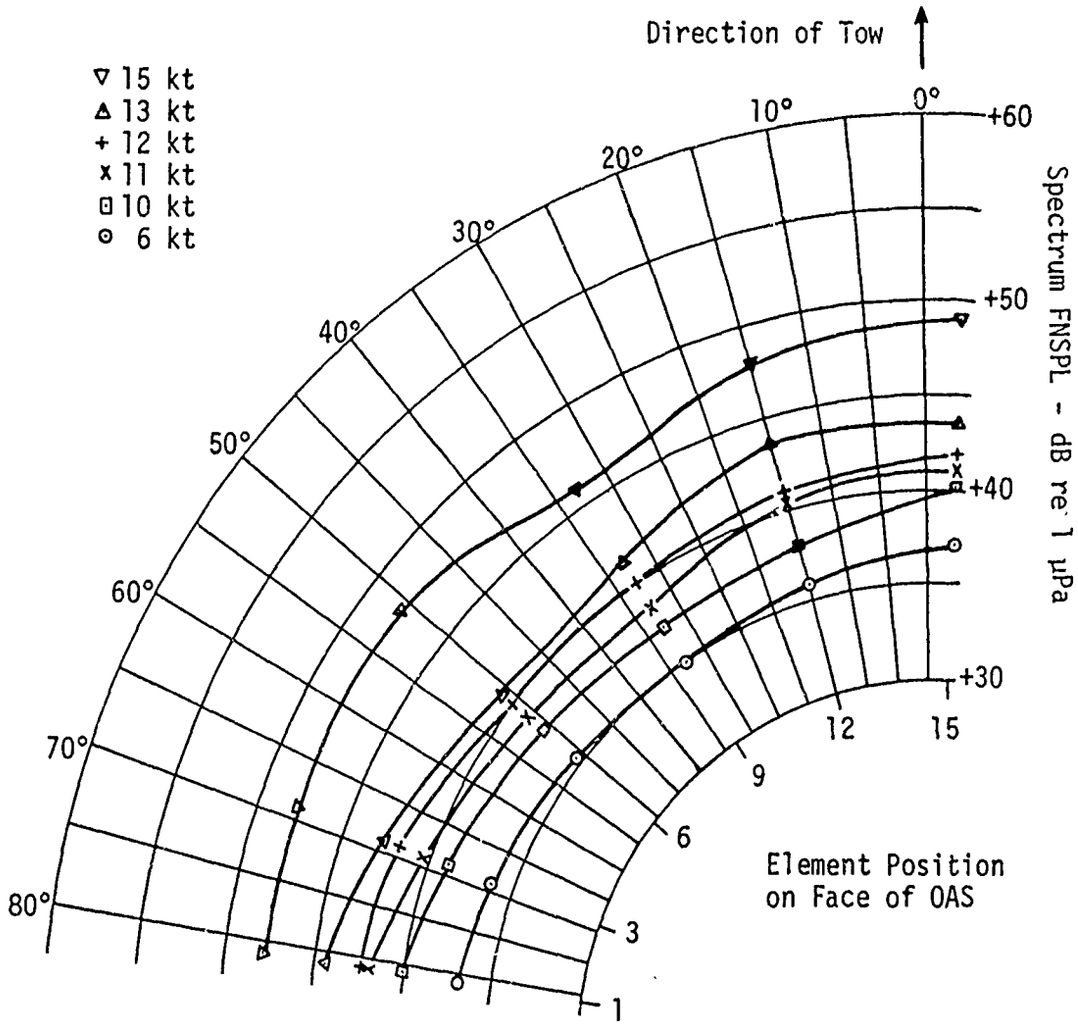

FIGURE 30

FNSPL VERSUS ELEMENT POSITION, SPEED AS A PARAMETER,
OAS HYDROPHONE, 1:12 PLATE STRUT

The flow noise from the lens hydrophone was much lower than anticipated. As a consequence, the electronic system did not contain enough gain; therefore, the flow noise was below the minimum detectable level. This level was calculated to be +53 dB re 1 μPa, corrected to 1 Hz bandwidth. The hydrophone was mounted on the 1:12 plate strut. The speed for the tests was limited to 14 kt to avoid rupturing the fragile window on the fluid lens housing. The flow noise detection apparatus was tested by placing a high level signal projector into the water in front of the hydrophone. The total system was found to be in working order, from the hydrophone to the data playback system to the strip chart recorder.

With proof that the system is functional, it can be validly stated that the spectrum FNSPL for the lens hydrophone does not exceed +53 dB re 1 μPa for speeds up to 14 kt. Note that the housing was irregular and unstreamlined. This datum is remarkable because at 14 kt it is at least 5 dB better than the ARL-300 hydrophone with streamlined housing supported by a 1:12 plate strut (both sets of data were taken at 100 kHz).

FOR OFFICIAL USE ONLY

IV. CONCLUSIONS

During the period March 1973 through February 1974, the goals originally set for Contract N00024-73-C-1117, Task 0003, have been fulfilled. Flow noise was measured for the two conventional high frequency minehunting sonar hydrophones which were immediately available: the ARL-253-2, an OAS prototype of the AN/WQS-1, and a lens hydrophone, FC75 fluid filled, provided by NCSL. The combination of design and subsequent flow noise measurement of the ARL-300 hydrophone housing has provided some pointers and references for future housing design. In addition to the original tasks, data have been provided that indicate that support strut shape significantly affects flow noise.

The flow noise measurements on the OAS have provided some FNSPL versus speed information and have indicated some geometric variation about the cylindrical face of a 14 in. diam by 3 1/2 in. high disk for a frequency of 200 kHz and for a 20 kHz bandwidth. Measurements on the lens hydrophone were significant because the FNSPL was much less than expected. This irregular unstreamlined housing produced an FNSPL at least 5 dB below that of a streamlined line hydrophone. Speculation as to the causes of this result includes the following possibilities.

(1) The extra distance from element location to dome surface (12 in. to 16 in. versus 2 in.) places the elements out of reach of the pseudosound.

(2) The element essentially integrates pressure fluctuations over the entire face of the hydrophone, giving the same effect as if it were a larger diameter element subjected to minute areas of pressure variations.

Improvement of flow noise characteristics of a planar array due to streamlining is most dramatically demonstrated by the data presented in Fig. 24. The noise reduction at 17 kt is 7.2 dB. Even a not so perfectly

FOR OFFICIAL USE ONLY

streamlined housing represented by a cylindrical dome on the same streamlined tail demonstrates a 4 dB reduction in noise over the unstreamlined case (see Fig. 24). The importance of mounting the hydrophone on a streamlined narrow strut and of measuring the special noise problem due to ventilating cavities behind surface piercing struts are stressed in Fig. 26. The noise level due to strut ventilation is reduced by 8 dB at 14 kt by going from a 1:4 wedge strut to a 1:12 plate strut. Calculations show that a ventilating cavity behind the cylindrical strut which supported the hydrophone used in the previous flow noise study at ARL (and referenced in Fig. 1) would have reached the top case of the hydrophone at 9.7 kt. Thus, these data may be measuring the noise caused by support strut ventilation more than the noise caused by flow about the hydrophone housing. Nevertheless, the data are valid for that particular strut-hydrophone arrangement.

It can be noted that the 1:4 wedge strut, cylindrical dome, line array is 4 dB quieter at 14 kt than the cylindrical strut, cylindrical dome, line array; the 1:12 plate strut, bare face, line array is 5 dB quieter at 14 kt. Any further comparison is inhibited by the lack of overlap of the two data sets. The previous study was speed limited at 14 kt; the present study is limited by a minimum detection level of +58 dB re 1 μPa which permits data comparisons only at the highest speeds and noise levels represented in Fig. 1.

The design criteria used in streamlining the ARL-300 hydrophone housing and the sources referenced should be sufficient to provide a starting point for further effort toward streamlining high frequency minehunting sonar soundheads. These design criteria, combined with the measured results, should present some idea for reduction of flow noise. Some consideration should be given toward flow noise reduction through selection of an array shape or configuration less susceptible to flow noise, i.e., streamlined, small frontal area, mounted in dome well ahead of onset of cavitation location, narrower element beam

FOR OFFICIAL USE ONLY

patterns to reduce effect of flow noise generated to rear of array, etc. It is also important to make sure that the dome, if free flooded, is tight fitting and that any access port is not located in an area prone to cavitation. Such a port location will rapidly drain the dome and leave an air cavity in front of the hydrophone array.

Some thought should go into the possibility of sealing the dome and filling the cavity with castor oil or a similar pressure conduction fluid with a ρc approximating that of water. In designing hydrophones which will operate in flow noise prone conditions, care should be taken to restrict regions of dome or window coverage to those regions through which it is necessary to accept data. All other regions should be constructed of sound opaque materials to shield the array from flow noise originating from sources not in the direction of desired data transmission. Dome areas should be minimized. Element to turbulence region separation should be increased to get out of pseudosound noise regions. Flow noise characteristics of sonar soundhead shapes and methods of flow noise reduction should be considered vital parts of early design stages or even of the theoretical planning of systems.

Mounting struts, specifically surface piercing mounting struts, must be designed to resist the formation of ventilating cavities. If this is not possible, means, such as slanting the strut forward or piercing the cavity prone region with horizontal plates, must be found to limit the depth of penetration of this cavity so that it does not reach the hydrophone housing. An implication can be made that care must be taken to reduce the flow noise characteristic of any hydrophone mounting strut, whether it is surface piercing or not. Finally, the lens beamforming concept needs to be thoroughly examined for use in high flow noise environments. The fact that the lens hydrophone in an irregular unstreamlined housing outperformed a line-type hydrophone mounted in a streamlined housing implies a streamlined housing on an acoustic lens sonar soundhead may be quite flow noise resistant.

FOR OFFICIAL USE ONLY

PRECEDING PAGE BLANK-NOT FILMED

V. RECOMMENDATIONS FOR FUTURE FLOW NOISE STUDIES

Practically no flow noise data exist for frequencies above 80 kHz. A method should be devised for determining the frequency variation of flow noise. Due to the limitations of tape recorders in frequency, bandwidth, dynamic range, and tape flutter, some means should be developed for running the data directly through a spectrum analyzer before recording. One primary concern for minimizing flow noise in future sonars should be consideration of operating frequency. Another parameter requiring investigation is flow noise dependence on element radiating face size. The effect of ambient pressure in the reduction of flow noise could be measured with an eye toward specifying operation at greater depths.

Specifically, for the design of another flow noise experiment, the use of single element housings having shapes with well-known flow characteristics is recommended. The variation of only one parameter should be permitted at a time. The effect of increased dome to element separation should be measured. Attention should be paid to locations at which cavitation occurs on the body, and an attempt should be made to have element beamwidths narrow enough to keep the location well down on, or off of, the main lobe. Caution should be taken in mounting housings as it is necessary to design mounting struts as carefully as possible. Lens beamforming as a flow noise resistant device should be investigated.

The use of a water flow tunnel, analogous to the wind tunnel of aerodynamics, would greatly aid flow noise study in several respects. For example, visual evidence of the onset of cavitation could be obtained. Visual recording of turbulence flow through the use of Schlieren photographic techniques could be used. No tape recording equipment would be necessary, because all equipment would be put on line for real time measurements; therefore, data would not be limited by the poor parameters of tape recorders, such as tape flutter.

FOR OFFICIAL USE ONLY

PRECEDING PAGE BLANK-NOT FILMED

REFERENCES

1. Samuel A. Means and Edmund Key, "Flow Noise Studies" (U), Applied Research Laboratories Technical Report No. 72-25 (ARL-TR-72-25), Applied Research Laboratories, The University of Texas at Austin (16 August 1972). CONFIDENTIAL

2. Jerome Goodman and Gerald R. Castellucci, "Control of Flow Noise Associated with Minehunting Sonar," NAVSHIP RANDCEN Technical Note SAD-418-945 (June 1971).

3. "Quarterly Status Report under Contract N00014-70-A-0166, Tasks 0001, 0003, 0006" (U), Applied Research Laboratories, The University of Texas at Austin (25 August 1972). CONFIDENTIAL

4. "Quarterly Status Report under Contract N00014-70-A-0166, Tasks 0006, 0008" (U), Applied Research Laboratories, The University of Texas at Austin (14 April 1972). CONFIDENTIAL

5. Richard Von Mises, Theory of Flight (Dover Publications, Inc., New York, 1959), Section VI.2, p. 117.

6. Herman Schlichting, Boundary-Layer Theory, 6th Edition (McGraw-Hill Book Company, Inc., New York, 1968), Chapter X, p. 199.

7. Sighard F. Hoerner, Fluid-Dynamic Drag (Published by the author, 148 Busteed Drive, Midland Park, New Jersey, 1965), p. 10-5.

8. Ibid., p. 10-14.

FOR OFFICIAL USE ONLY

PRECEDING PAGE BLANK-NOT FILMED

FLOW NOISE BIBLIOGRAPHY

Ackeret, J., "Experimental and Theoretical Investigation of Cavitation in Water," U.S. Exp. Model Basin Translation No. 20, U.S. Experimental Model Basin (1936).

Appel, P. E.,"The Role of Impurities in Cavitation Threshold Determination," J. Acoust. Soc. Am. 48, 1179-1186 (1970).

Arndt, R. E. A., Ippen, A. T.,"Rough Surface Effects on Cavitation Inception," J. Basic Engineering, Trans. ASME Series D, 81 (June 1968).

Bachelor, G. R., The Theory of Homogeneous Turbulence (Cambridge University Press, New York, 1953).

Bakewell, H. P., Jr., "Turbulent Wall-Pressure Fluctuations on a Body of Revolution," J. Acoust. Soc. Am. 43, 1358-1363 (1968).

Barber, G. J., "Flow Noise on Transducers Under an Acoustic Window," Admiralty Underwater Weapons Establishment Technical Note No. 263/67, Admiralty Underwater Weapons Establishment, Teddington, Middlesex, England (September 1967).

Barber, G. J., "Flow Noise Measurements using Terylene Fabric Nose Sections on the A.U.W.E. Buoyant Vehicle" (U), Admiralty Underwater Weapons Establishment Technical Note No. 247/67, Admiralty Underwater Weapons Establishment, Teddington, Middlesex, England (July 1967). CONFIDENTIAL

Barber, G. J., "The Contrast Between Spectra of Noise Radiated from, and Wall Pressure Patterns under, a Turbulent Boundary Layer" (U), Admiralty Underwater Weapons Establishment Technical Note No. 216/66, Admiralty Underwater Weapons Establishment, Teddington, Middlesex, England (August 1966). CONFIDENTIAL

Barber, G. J., "The Flow Noise Spectra for Flush Transducers" (U), Admiralty Underwater Weapons Establishment Technical Note No. 257/67, Admiralty Underwater Weapons Establishment, Teddington, Middlesex, England (August 1967). CONFIDENTIAL

Barber, G. J., Bundy, R. V., "Turbulent Boundary Layer Noise in the Presence of Polymer Additives" (U), Admiralty Underwater Weapons Establishment Technical Note No. 226/67, Admiralty Underwater Weapons Establishment, Teddington, Middlesex, England (March 1967). CONFIDENTIAL

FOR OFFICIAL USE ONLY

Barber, G. J., Bundy, Gawler, Sherman, Webb, "The A.U.W.E. Buoyant Vehicle," Admiralty Underwater Weapons Establishment Technical Note No. 217/66, Admiralty Underwater Weapons Establishment, Teddington, Middlesex, England (January 1967).

Barger, J. E., "Measurements of Noise Produced by a Turbulent Boundary Layer," JUA(USN) 10, 283-291 (1960).

Bauman, W. D., "A Preliminary Hydrofoil Design Incorporating A Cavitation Free Operation Requirement," (Bureau of Ships, Washington, D.C., 1964).

Bernd, L. H., "Study of the Surface Films of Gas Nuclei (As Related to Cavitation and Tensile Strength in Water) Part III," General Electric Research and Development Center Report No. S-68-1138, General Electric Research and Development Center, Schenectady, New York (May 1967).

Bernd, L. H., "Study of the Surface Films of Gas Nuclei (As Related to Cavitation and Tensile Strength in Water) Part IV," General Electric Research and Development Center Report No. S-68-1038, General Electric Research and Development Center, Schenectady, New York (December 1967).

Blake, F. G., Jr., "The Onset of Cavitation in Liquids," Harvard University Acoustic Laboratory Technical Memorandum No. 12, Harvard University, Cambridge, Massachusetts (1949).

Bradley, J. W., McDaniel, O. H., "Self-Noise Measurements of the H.S. Denison" (U), Grumman Aircraft Engineering Corporation Report No. DA MA3113 173 1, Grumman Aircraft Engineering Corporation, Bethpage, New York (December 1963). CONFIDENTIAL

Brandshaw, P., "The Turbulence Structure of Equilibrium Boundary Layers," NPL Aero Rep. 1184 (1966).

Briggs, H. B., Johnson, J. B., Mason, W. P., "Properties of Liquids at High Sound Pressure," J. Acoust. Soc. Am. 19, 664-677 (July 1947).

Bull, M. K., "Properties of the Fluctuating Wall-Pressure Field of a Turbulent Boundary Layer," AGARD Rep. 455, 1-34 (1963).

Bull, M. K., Willis, J. L., "Some Results of Experimental Investigations of the Surface Pressure Field due to a Turbulent Boundary Layer," University of Southampton AASU Report No. 199, University of Southampton, Southampton, England (1961).

Chase, D. M., "Flow Noise Transmitted Through Domes or Acoustically Modified by Non-Rigid Boundaries," Technical Research Group, Inc., Control Data Corporation, Melville, New York, TRG-011-TN-66-1, (January 1966).

FOR OFFICIAL USE ONLY

Connoly, W., "Ultrasonic Cavitation Thresholds," J. Acoust. Soc. Am. 26, 843-848 (September 1954).

Corcos, G. M., "The Structure of the Turbulent Pressure Field in Boundary-Layer Flows," J. Fluid Mech. 18, 353-378 (1964).

Eisenberg, Phillip, "On the Mechanism and Prevention of Cavitation," David Taylor Model Basin Report No. 712, David Taylor Model Basin, Washington, D.C. (July 1950).

El Baroudi, M. Y., Ludwig, G. R., Ribner, H. S., "An Experimental Investigation of Turbulence-Excited Panel Vibration and Noise (Boundary Layer Noise)," AGARD Report No. 465 (April 1963).

Ellis, H. D., "The Acoustic and Hydrodynamic Effect of Vortex Shedding from Struts and Aerofoil Sections in Water," Admiralty Underwater Weapons Establishment Technical Note No. 274/67, Admiralty Underwater Weapons Establishment, Teddington, Middlesex, England (November 1967).

Ellis, H. D., "Some Effects of Surface Roughness and Discontinuities on Boundary Layer Noise" (U), Admiralty Underwater Weapons Establishment Technical Note No. 328/68, Admiralty Underwater Weapons Establishment, Teddington, Middlesex, England (November 1969). CONFIDENTIAL

Ellis, H. D., Jeanes, J. A., "Drag Reduction with Suspensions of Fibers," Admiralty Underwater Weapons Establishment Technical Note No. 342/69, Admiralty Underwater Weapons Establishment, Teddington, Middlesex, England (November 1969).

Fergusson, F. A., Mann, C. R., "Variable-Depth Sonar Background Noise" (U), JUA(USN) 10, 15-21 (January 1960). CONFIDENTIAL

Ffowcs-Williams, J. E., "The Noise from Turbulence Convected at High Speed," Philos. Trans. R. Soc. Lond. A, 255, 469-503 (1963).

Fitzpatrick, H. M., Strasberg, M., "Hydrodynamic Sources of Sound," David Taylor Model Basin Report No. 1269, David Taylor Model Basin, Washington, D.C. (January 1959).

Fitzpatrick, H. M., Strasberg, M., "Hydrodynamic Sources of Sound," Proc. Symposium on Naval Hydrodynamic, U.S. Natl. Acad. Sci.-Natl. Research Council Publ. 515 (1957).

Foxwell, J H., "The Wall Pressure Spectrum Under a Turbulent Boundary Layer," Admiralty Underwater Weapons Establishment Technical Note No. 218/66, Admiralty Underwater Weapons Establishment, Teddington, Middlesex, England (1966).

FOR OFFICIAL USE ONLY

Foxwell, J. H., "Boundary Layer Noise," Admiralty Underwater Weapons Establishment Technical Note No. 359/69, Admiralty Underwater Weapons Establishment, Teddington, Middlesex, England (July 1969).

Foxwell, J. H., "The Diffraction of Sound Round A Rigid Sphere From A Point Source on the Sphere," Admiralty Underwater Weapons Establishment Technical Note No. 244/67, Admiralty Underwater Weapons Establishment, Teddington, Middlesex, England (July 1967).

Foxwell, J. H., Grandshaw, R. H., "The Boundary Layer on A Rotating Cylinder and Measurements of the Wall Pressure Spectrum," Admiralty Underwater Weapons Establishment Technical Note No. 306/68, Admiralty Underwater Weapons Establishment, Teddington, Middlesex, England (August 1968).

Foxwell, J. H., Grandshaw, R. H., "The Effect of a Polymer Additive in Water or the Boundary Layer and the Wall Pressure Spectrum of a Rotating Cylinder" (U), Admiralty Underwater Weapons Establishment Technical Note No. 289/68, Admiralty Underwater Weapons Establishment, Teddington, Middlesex, England (February 1968). CONFIDENTIAL

Foxwell, J. H., Grandshaw, R. H., "Some Effects of Surface Roughness on Flow Noise" (U), Admiralty Underwater Weapons Establishment Technical Note No. 276/67, Admiralty Underwater Weapons Establishment, Teddington, Middlesex, England (November 1967). CONFIDENTIAL

Gardner, S., "Surface Pressure Fluctuations Produced by Boundary Layer Turbulence," Technical Research Group, Inc., Control Data Corporation, Melville, New York, Report TRG-142-TN-63-5, 1-31 (1963).

Gawler, D. R. R., "Preliminary Design Tests for a Shipborne Fluid Additive Ejection System," Admiralty Underwater Weapons Establishment Technical Note No. 245/67, Admiralty Underwater Weapons Establishment, Teddington, Middlesex, England (July 1967).

Gawler, D. R. R., "The Reduction of Cavitation Noise by the Use of Polyethylene Oxide Solutions" (U), Admiralty Underwater Weapons Establishment Technical Note No. 341/69, Admiralty Underwater Weapons Establishment, Teddington, Middlesex, England (March 1969). CONFIDENTIAL

Gawler, D. R. R., "The Design and Use of a Ship-borne Polymer Additive Ejection System and Its Associated Noise Measuring Equipment" (U), Admiralty Underwater Weapons Establishment Technical Note No. 337/69, Admiralty Underwater Weapons Establishment, Teddington, Middlesex, England (February 1969). CONFIDENTIAL

Goodman, Jerome, "Flow Noise Associated With Minehunting Sonar" (U), Department of Acoustics and Vibration Technical Note, Naval Ship Research and Development Center, Washington, D.C. (April 1970). CONFIDENTIAL

Haddle, G. P., Skudrzyk, E. J., "The Physics of Flow Noise," J. Acoust. Soc. Am. 46, 130-157 (1969).

Haddle, G. P., Skudrzyk, E. J. "Flow Noise, Theory and Experiment," in Underwater Acoustics V. M. Albers (ed.) (Plenum Press, Inc., New York, 1963).

Haddle, G. P., Skudrzyk, E. J., "Noise Production in a Turbulent Boundary Layer by Smooth and Rough Surfaces," J. Acoust. Soc. Am. 32, 19-34 (1960).

Harrison, M. "An Experimental Study of Single Bubble Cavitation Noise," David Taylor Model Basin Report No. 815, David Taylor Model Basin, Washington, D.C. (June 1952).

Harrison, M., "Pressure Fluctuations of the Wall Adjacent to a Turbulent Boundary Layer," David Taylor Model Basin Report No. 1260, David Taylor Model Basin, Washington, D.C. (1958).

Harvey, E. N., McElroy, W. D., Whiteley, A. H., "On Cavity Formation in Water," J. Appl. Phys. 18 (1947).

Heaps, H. S. "Effect of Turbulence Nearfield on a Shielded Transducer, J. Acoust. Soc. Am. 40, 1331-1336 (1966).

Holl, J. W., "The Inception of Cavitation on Isolated Surface Irregularities," J. Basic Eng., ASME Paper 59-Hyd-12, presented at Hydraulic Conference, Ann Arbor, Michigan (13-15 April 1959).

Holtz, L. C., "Radiated Noise of a Buoyantly Propelled Rising Vehicle with and without Nose Coating," JUA(USN) 13, 357-390 (1963).

Hoover, W. R., "Hysurch (Hydrographic Survey and Charting System) Self Noise Measurements of Flush Mounted Hydrophones," Naval Ship Research and Development Center Technical Note DAV-274-942, Naval Ship Research and Development Center, Washington, D.C. (December 1969).

Houghton, G., "Theory of Bubble Pulsation and Cavitation," J. Acoust. Soc. Am. 35, 1387-1393 (September 1963).

Kaplan, P., Lehman, A., "An Experimental Study of Hydroelastic Instabilities of Finite Span Hydrofoils Under Cavitating Conditions," Report No. 6412, Nunn (Joseph) and Associates, Pasadena, California (February 1964).

Kendrick, A. L., "Some Studies of Submarine Radiated Flow Noise Problem," JUA(USN) 13, 403-407 (1963).

FOR OFFICIAL USE ONLY

Kermeen, R. W., "Water Tunnel Tests of NACA 4412 and Walchner Profile 7 Hydrofoils in Noncavitating and Cavitating Flows," California Institute of Hydrodynamics Laboratory Report No. 47-5, California Institute of Hydrodynamics Laboratory, Pasadena, California (February 1956).

Kirby, G. J., "The Wall Pressure Spectrum of Turbulence and Its Resolution by Transducers," Admiralty Underwater Weapons Establishment Technical Note No. 290/68, Admiralty Underwater Weapons Establishment, Teddington, Middlesex, England (February 1968).

Kirby, G. J., "Torpedo Noise Measurements Using the Flow Noise Test Vehicle" (U), Admiralty Underwater Weapons Establishment Technical Note No. 324/68, Admiralty Underwater Weapons Establishment, Teddington, Middlesex, England (December 1968). CONFIDENTIAL

Kirby G. J., "A Theory for Self Noise in Torpedo Homing Arrays" (U), Admiralty Underwater Weapons Establishment Technical Note No. 370/70, Admiralty Underwater Weapons Establishment, Teddington, Middlesex, England (January 1970). SECRET

Kirby, G. J., "A Semi-Empirical Model Relating Torpedo Self Noise and Radiated Noise and its Possible Implications" (U), Admiralty Underwater Weapons Establishment Technical Note No. 284/68, Admiralty Underwater Weapons Establishment, Teddington, Middlesex, England (December 1968). SECRET

Kirby, G. J., Ellis, Heslop, "The Contribution of Polymer Ejection Noise to Torpedo Self Noise" (U), Admiralty Underwater Weapons Establishment Technical Note No. 369/70, Admiralty Underwater Weapons Establishment, Teddington, Middlesex, England (January 1970). CONFIDENTIAL

Kirby, G. J., Grandshaw, Bryan, "The Flow Noise Associated With Fabric-Covered Rotating Cylinders in Water" (U), Admiralty Underwater Weapons Establishment Technical Note No. 308/68, Admiralty Underwater Weapons Establishment, Teddington, Middlesex, England (August 1968). CONFIDENTIAL

Kline, S. J., Reynolds, W. C., Runstadler, P. W., "An Experimental Investigation of the Flow Structure of the Turbulent Boundary Layer," Department of Mechanical Engineering, Stanford University, Stanford, California (1963).

Kraichnan, R. H., "Noise Transmission from Boundary Layer Pressure Fluctuations," J. Acoust. Soc. Am. 29, 65-80 (1957).

Laitinen, P. O., "Flow Noise of Streamlined Bodies Falling Freely in Water," Naval Electronics Laboratory Research Report No. 1182, Naval Electronics Laboratory, San Diego, California (1963).

FOR OFFICIAL USE ONLY

Laufer, J., Ffowcs-Williams, J. E., Childress, S., "Mechanism of Noise Generation in the Turbulent Boundary Layer," NATO AGARDogr. 90 (November 1964).

Leehey, P., "Review of Flow Noise Research Related to Sonar Self Noise Problem," Bolt, Beranek, and Newman, Inc., Report No. 4110366, Bolt, Beranek, and Newman, Inc., Cambridge, Massachusetts (March 1966).

Maestrello, L., "Measurement of Noise Radiated by Boundary Layer Excited Panels," J. Sound Vib. 2, 100-115 (1965).

Maidanik, G., "Domed Sonar System," J. Acoust. Soc. Am. 44, 113-124 (1968).

Maidanik, G., Reader, W. T., "Filtering Action of a Blanket Dome," J. Acoust. Soc. Am. 44, 497-502 (1968).

Meecham, W. C., "Surface and Volume Sound from Boundary Layers," J. Acoust. Soc. Am. 37, 516-522 (1965).

Meecham, W. C., "On Noise Produced by Boundary-Layer Turbulence," J. Acoust. Soc. Am. 35, 116-117 (1963).

Mellen, R. H., "Ultrasonic Spectrum of Cavitation Noise in Water," J. Acoust. Soc. Am. 26, 356-360 (May 1954).

Moeckel, G. P., "The Effect of Distortion of Sub-Cavitating Foil Contours on Cavitation Inception Velocity," David Taylor Model Basin Report, David Taylor Model Basin, Washington, D.C. (October 1965).

Murdoch, G., "NAVADO Atlantic Survey: A Study of Sea Bed Acoustic Reflectivity at Station Oscor II" (U), Admiralty Underwater Weapons Establishment Technical Note No. 346/69, Admiralty Underwater Weapons Establishment, Teddington, Middlesex, England (August 1969). CONFIDENTIAL

Navin, J. G., Fortune, R. G., "Preliminary Results of Noise Measurements of the U.S. Maritime Administration Hydrofoil Test Vehicle H.S. Denison" (U), Navy Underwater Sound Laboratory, New London, Connecticut (August 1963). CONFIDENTIAL

Nisewanger, C. R., Sterling, F. B., "Flow Noise Inside Boundary Layers of Buoyance-Propelled Test Vehicle," NAVWEPS Report No. 8519 (NOTS TP 3511), China Lake, California (April 1965).

Nishi, R. Y., Stockhausen, J. H., Evenson, E., "Measurement of Noise on an Underwater Towed Body," J. Acoust, Soc. Am. 48, 753-758 (1970).

Numachi, F., Oba, R., Chida, I., "Effect of Surface Roughness on Cavitation Performance of Hydrofoils - Report 1," Journal of Basic Engineering, Trans. ASME Series D, Vol. 87 (December 1965).

FOR OFFICIAL USE ONLY

Oakley, O. H., "A Preliminary Hydrofoil Design Incorporating A Cavitation-Free Operation Requirement," Bureau of Ships, Washington, D.C. (1964).

Peterson, F. B., "Cavitation Originating at Liquid-Solid Interfaces," Naval Ship Research and Development Center Report No. 2799, Naval Ship Research and Development Center, Washington, D.C. (September 1968).

Pipkin, E. L., "An Introduction to Underwater Cavitation," Navy Mine Defense Laboratory Report No. Tp141, Navy Mine Defense Laboratory, Panama City, Florida (October 1958).

Plesset, M. S., "The Dynamics of Cavitation Bubbles," J. Appl. Mech. 16, 277-282 (1949).

Richardson, E. G., Technical Aspects of Sound, Volume III (Elsevier Publishing Co., Amsterdam, New York, 1962).

Robertson, J. M., "A Turbulence Primer," Illinois Engineering Experimental Station Circular No. 79, pp. 1-28, Illinois Engineering Experimental Station, Urbana, Illinois (1960).

Rouse, H., McNown, J. S., "Cavitation and Pressure Distribution: Head Forms at Zero Angle of Yaw," University of Iowa Studies in Engineering Bulletin No. 32, University of Iowa, Iowa City, Iowa (1948).

Schiebe, F. R., "The Influence of Gas Nuclei Size Distribution on Transient Cavitation Near Inception," St. Anthony Falls Hydraulic Laboratory Project Report No. 107, St. Anthony Falls Hydraulic Laboratory, University of Minnesota, Minneapolis, Minnesota (May 1969).

Schlichting, H., Boundary-layer Theory (McGraw-Hill Book Company, Inc., New York, 1960).

Sherman, B. A., "The Effect of Storage on the Drag-Reducing Properties of Polyethylene Oxide WSR 301," Admiralty Underwater Weapons Establishment Technical Note No. 303/68, Admiralty Underwater Weapons Establishment, Teddington, Middlesex, England (July 1968).

Sherman, B. A., "Molecular Structure Drag Reduction and Shear Degradation of Polymer Solutions," Admiralty Underwater Weapons Establishment Technical Note No. 340/69, Admiralty Underwater Weapons Establishment, Teddington, Middlesex, England (February 1969).

Skudrzyk, E. J., "Underwater Acoustics, Section V.D.," Pennsylvania State University, State College, Pennsylvania (June 1967).

Strasberg, M., "Gas Bubbles as Sources," J. Acoust. Soc. Am. 28, 20-26 (January 1956).

FOR OFFICIAL USE ONLY

Strasberg, M., "The Influence of Air-Filled Nuclei on Cavitation Inception," David Taylor Model Basin Report No. 1078, David Taylor Model Basin, Washington, D.C. (May 1957).

Strasberg, M., The Onset of Ultrasonic Cavitation in Tap Water, Doctoral Dissertation (Catholic University of America Press, Washington, D.C., 1956).

Streeter, V. L., Handbook of Fluid Dynamics (McGraw-Hill Book Company, Inc., New York, 1961).

Thorpe, H. A., Shapiro, N., "Underwater Sound Radiation From the Lockheed Hydrofoil Craft LH-2" (U), Lockheed Aircraft Corporation Report No. 15974, Lockheed Aircraft Corporation, Burbank, California (July 1962). CONFIDENTIAL

U.S. Navy, "Hydrodynamic Noise," JUA(USN) 13 (April 1963).

Willmarth, W. W., "Corrigendum: Measurements of the Fluctuating Pressure at the Wall Beneath a Thick Turbulent Boundary Layer," J. Fluid Mech. 21, 107-109 (1965).

Willmarth, W. W., "Wall Pressure Fluctuations in a Turbulent Boundary Layer," J. Acoust. Soc. Am. 28, 1048-1053 (1956).

Willmarth, W. W., Wooldridge, C. E., "Measurements of the Fluctuating Pressure at the Wall Beneath a Thick Turbulent Boundary Layer," J. Fluid Mech. 14, 187-210 (1962).

Wilson, L. N., "An Experimental Investigation of the Noise Generated by Turbulent Flow Around a Rotating Cylinder," University of Toronto Institute of Aerophysics Report No. 57, Institute of Aerophysics, University of Toronto, Toronto, Canada (April 1959).

FOR OFFICIAL USE ONLY

PRECEDING PAGE BLANK-NOT FILMED

4 March 1974

DISTRIBUTION LIST FOR
ARL-TR-74-7
FINAL REPORT
UNDER CONTRACT N00024-73-C-1117, Task 0003
FOR OFFICIAL USE ONLY

Copy No.	
	Commander Naval Ship Systems Command Department of the Navy Washington, DC 20362
1 - 2	Attn: Mr. C. E. Fox, PMS 302-24
3	Mr. F. Romano, SHIPS 03542
	Chief of Naval Research Department of the Navy Arlington, VA 22217
4	Attn: Code 411
5	Code 410
6	Code 412
7	Code 414
8	Code 480
9	Commanding Officer Office of Naval Research Branch Office Chicago 536 South Clark Street Chicago, IL 60605
10 - 15	Director Naval Research Laboratory Department of the Navy Washington, DC 20390 Attn: Technical Information Division
16	Commander Naval Ship Engineering Center Department of the Navy Prince George's Center Center Building Hyattsville, MD 20782 Attn: NAVSEC 6126

FOR OFFICIAL USE ONLY

Dist. list for ARL-TR-74-7, Final Report under N00024-73-C-1117 (Cont'd)

Copy No.	
17	Commander Naval Air Systems Command Department of the Navy Washington, DC 20360 Attn: NAVAIR 5305
18	Commander Naval Ordnance Systems Command Department of the Navy Washington, DC 20360 Attn: ORD-053
	Chief of Naval Operations Department of the Navy Washington, DC 20350
19	Attn: Op-325
20	Op-981F
21	Op-07T14
22	Op-343
	Office of the Chief of Naval Material Department of the Navy Washington, DC 20360
23	Attn: NAVMAT 031
24	NAVMAT 0312C
25	NAVMAT 0323
26	CDR Gary B. Lowe, NAVMAT 0314
27	PM 19
	Commanding Officer and Director Naval Coastal Systems Center Department of the Navy Panama City, FL 32401
28	Attn: M. Lacey
29	H. L. Warner
30	T. Haney
31 - 32	Commander Naval Ordnance Laboratory Department of the Navy White Oak Silver Spring, MD 20910

FOR OFFICIAL USE ONLY

Dist. list for ARL-TR-74-7, Final Report under N00024-73-C-1117 (Cont'd)

Copy No.	
33 - 34	Commander Naval Undersea Center Department of the Navy San Diego, CA 92132 Attn: D555
35 - 36	Officer-in-Charge New London Laboratory Naval Underwater Systems Center Department of the Navy New London, CT 06320
37	Superintendent Naval Postgraduate School Monterey, CA 93940 Attn: Librarian (Code 2124)
38	Commander MINEWARFORCE Naval Base Charleston, SC 29408 Attn: CAPT J. Williford
39	Commander Mobile Minecountermeasures Command Naval Base Charleston, SC 29408 Attn: CAPT F. Vecchione
40 - 41	Commander Naval Schools, Mine Warfare (022) Naval Base Charleston, SC 29408
42 - 53	Commanding Officer and Director Defense Documentation Center Defense Services Administration Cameron Station, Building 5 Alexandria, VA 22314
54	National Academy of Sciences 2101 Constitution Avenue, NW Washington, DC 20418 Attn: Mine Advisory Committee

FOR OFFICIAL USE ONLY

Dist. list for ARL-TR-74-7, Final Report under N00024-73-C-1117 (Cont'd)

Copy No.	
55	Office of Naval Research Resident Representative Room 582, Federal Building 300 East 8th Street Austin, TX 78701
56	Sonar Administrative Staff, ARL/UT
57	Sonar Research Division, ARL/UT
58	Sonar Engineering Division, ARL/UT
59	Jimmy F. Byers, ARL/UT
60	Clarence W. Dittman, ARL/UT
61	James K. Vinson, ARL/UT
62	Library, ARL/UT
63 - 68	Reserve

FOR OFFICIAL USE ONLY

UNCLASSIFIED

SECURITY CLASSIFICATION OF THIS PAGE (When Data Entered)

REPORT DOCUMENTATION PAGE		READ INSTRUCTIONS BEFORE COMPLETING FORM
1. REPORT NUMBER ARL-TR-74-7	2. GOVT ACCESSION NO.	3. RECIPIENT'S CATALOG NUMBER
4. TITLE (and Subtitle) HIGH FREQUENCY FLOW NOISE		5. TYPE OF REPORT & PERIOD COVERED Final Report 7 Feb 1973 - 6 Feb 1974 6. PERFORMING ORG. REPORT NUMBER
7. AUTHOR(s) Clarence W. Dittman James K. Vinson Jimmy F. Byers		8. CONTRACT OR GRANT NUMBER(s) N00024-73-C-1117
9. PERFORMING ORGANIZATION NAME AND ADDRESS Applied Research Laboratories The University of Texas at Austin Austin, Texas 78712		10. PROGRAM ELEMENT, PROJECT, TASK AREA & WORK UNIT NUMBERS Proj.Ser.No. SF 11121501 Task 17142
11. CONTROLLING OFFICE NAME AND ADDRESS NAVAL SHIP SYSTEMS COMMAND Department of the Navy Washington, D. C. 20362		12. REPORT DATE 4 March 1974 13. NUMBER OF PAGES 78
14. MONITORING AGENCY NAME & ADDRESS (if different from Controlling Office)		15. SECURITY CLASS. (of this report) UNCLASSIFIED 15a. DECLASSIFICATION/DOWNGRADING SCHEDULE

16. DISTRIBUTION STATEMENT (of this Report)

FOR OFFICIAL USE ONLY

17. DISTRIBUTION STATEMENT (of the abstract entered in Block 20, if different from Report)

18. SUPPLEMENTARY NOTES

19. KEY WORDS (Continue on reverse side if necessary and identify by block number)

High frequency flow noise
Minehunting
Domes
Transducers
Surface piercing struts
Streamlining soundheads

20. ABSTRACT (Continue on reverse side if necessary and identify by block number)

A high frequency flow noise study was conducted at the Applied Research Laboratories (ARL), The University of Texas at Austin. The facility for measurement of flow noise is described. Data are presented for two frequencies, 100 kHz and 200 kHz, and for three soundhead array designs, a planar array, a cylindrical array, and a liquid lens. Data from acoustical measurements show (1) the effects of the speed of the soundhead through the

(over)

DD FORM 1 JAN 73 1473 EDITION OF 1 NOV 65 IS OBSOLETE
S/N 0102-014-6601

UNCLASSIFIED

SECURITY CLASSIFICATION OF THIS PAGE (When Data Entered)

20.

water, (2) the effects of array location within a planar hydrophone housing, (3) the effects of streamlining soundheads, and (4) the effects of streamlining surface piercing struts. The liquid lens hydrophone configuration proved most noise resistant. Recommendations are made for reduction of flow noise by means of soundhead design. Parameters for future flow noise experiments are presented. (U)